Appointment

From: Gunasekara, Mandy [/O=EXCHANGELABS/OU=EXCHANGE ADMINISTRATIVE GROUP (FYDIBOHF23SPDLT)/CN=RECIPIENTS/CN=F639EA28AF4C455493939E3129260707-GUNASEKARA,]
Sent: 3/24/2020 6:49:16 PM
To: Bill Koetzle [KoetzleB@api.org]

Subject: Declined: Call with Troy, Ross, Rachel, and Derrick
Location: Call

Start: 3/25/2020 8:00:00 PM
End: 3/25/2020 9:00:00 PM
Show Time As: Busy

Message

From: Gunasekara, Mandy [/O=EXCHANGELABS/OU=EXCHANGE ADMINISTRATIVE GROUP (FYDIBOHF23SPDLT)/CN=RECIPIENTS/CN=F639EA28AF4C455493939E3129260707-GUNASEKARA,]
Sent: 11/9/2020 3:28:41 PM
To: Paul Bailey [pbailey@americaspower.org]
CC: Hyman, Alana [Hyman.Alana@epa.gov]; Michelle Bloodworth [mbloodworth@americaspower.org]; Vella, Sophia [Vella.Sophia@epa.gov]; Dickerson, Aaron [dickerson.aaron@epa.gov]; Jonathan Wossene [jwossene@americaspower.org]
Subject: Re: Request for Administrator to Speak

Yes- the Admin will have my spot.

Sent from my iPhone

On Nov 9, 2020, at 10:11 AM, Paul Bailey <pbailey@americaspower.org> wrote:

Sure. I assume that he will be speaking rather than Mandy, right?

From: Hyman, Alana <Hyman.Alana@epa.gov>
Sent: Monday, November 09, 2020 10:05 AM
To: Paul Bailey <pbailey@americaspower.org>
Cc: Gunasekara, Mandy <gunasekara.Mandy@epa.gov>; Michelle Bloodworth <mbloodworth@americaspower.org>; Vella, Sophia <Vella.Sophia@epa.gov>; Dickerson, Aaron <dickerson.aaron@epa.gov>; Jonathan Wossene <jwossene@americaspower.org>
Subject: RE: Request for Administrator to Speak

Good Morning Paul,

I am sorry for the last-minute email but as it turns out there has been a change in the schedule for Administrator Wheeler. He is now available to participate in America's Power Board Meeting on Veteran's Day, Wednesday, November 11, 2020.
Is there still an opportunity for him to participate? Please let us know and we can coordinate accordingly.

We look forward to hearing from you,
Alana Hyman

Alana Hyman
Office of the Administrator
U.S. Environmental Protection Agency
Hyman.Alana@epa.gov

From: Paul Bailey <pbailey@americaspower.org>
Sent: Thursday, November 5, 2020 2:03 PM
To: Hyman, Alana <Hyman.Alana@epa.gov>
Cc: Gunasekara, Mandy <gunasekara.Mandy@epa.gov>; Michelle Bloodworth

<mbloodworth@americaspower.org>; Vella, Sophia <Vella.Sophia@epa.gov>; Dickerson, Aaron <dickerson.aaron@epa.gov>; Jonathan Wossene <jwossene@americaspower.org>
Subject: Re: Request for Administrator to Speak

Thanks.

Sent from my iPhone

On Nov 5, 2020, at 1:47 PM, Hyman, Alana <Hyman.Alana@epa.gov> wrote:

Good afternoon,

We are in receipt of the paperwork requested. Unfortunately, after review of the schedule, Administrator Wheeler will be unable to participate in America's Power Board meeting. The 11th of November is Veteran's Day Holiday and Administrator Wheeler will not be available to participate.

Thank you again for the request and please consider him again for the future.

Alana Hyman

Alana Hyman
Office of the Administrator
U.S. Environmental Protection Agency
Hyman.Alana@epa.gov

From: Paul Bailey <pbailey@americaspower.org>
Sent: Thursday, November 5, 2020 1:43 AM
To: Hyman, Alana <Hyman.Alana@epa.gov>; Vella, Sophia <Vella.Sophia@epa.gov>
Cc: Gunasekara, Mandy <gunasekara.Mandy@epa.gov>; Michelle Bloodworth <mbloodworth@americaspower.org>; Dickerson, Aaron <dickerson.aaron@epa.gov>; Jonathan Wossene <jwossene@americaspower.org>
Subject: RE: Request for Administrator to Speak

Form attached. Thanks for your help.
Paul

From: Hyman, Alana <Hyman.Alana@epa.gov>
Sent: Tuesday, November 03, 2020 11:42 AM
To: Paul Bailey <pbailey@americaspower.org>; Vella, Sophia <Vella.Sophia@epa.gov>
Cc: Gunasekara, Mandy <gunasekara.Mandy@epa.gov>; Michelle Bloodworth <mbloodworth@americaspower.org>; Dickerson, Aaron <dickerson.aaron@epa.gov>
Subject: RE: Request for Administrator to Speak

Good Morning,

Thank you for the following email. If you would be so kind to fill out the attached and send it to me at your convenience, I will be able to look further if we can indeed solidify this request, etc.

Thank you and I look forward to hearing back from you.
Alana

***A*lana Hyman**
Executive Assistant/Scheduler to the Administrator
Office of the Administrator
U.S. Environmental Protection Agency

From: Paul Bailey <pbailey@americaspower.org>
Sent: Monday, November 2, 2020 12:26 PM
To: Hyman, Alana <Hyman.Alana@epa.gov>; Vella, Sophia <Vella.Sophia@epa.gov>
Cc: Gunasekara, Mandy <gunasekara.Mandy@epa.gov>; Michelle Bloodworth <mbloodworth@americaspower.org>
Subject: Request for Administrator to Speak

America's Power has its Annual Board meeting scheduled for next Wednesday (November 11). The meeting will be conducted via Zoom. Mandy indicated that the Administrator would likely be available to speak. We have a slot reserved from 11:35 am to noon for him to speak and answer questions. Please forward any forms that need to be filled out, and we'll return them as quickly as we can. Thanks for your help.

Paul Bailey
4601 N. Fairfax Drive, Suite 1050 • Arlington, VA 22203
M: 703.586.2422
pbailey@americaspower.org

Message

From: Gunasekara, Mandy [/O=EXCHANGELABS/OU=EXCHANGE ADMINISTRATIVE GROUP (FYDIBOHF23SPDLT)/CN=RECIPIENTS/CN=F639EA28AF4C455493939E3129260707-GUNASEKARA,]
Sent: 4/1/2020 6:57:55 PM
To: Holmstead, Jeff [jeff.holmstead@bracewell.com]; Bodine, Susan [bodine.susan@epa.gov]
CC: Idsal, Anne [idsal.anne@epa.gov]
Subject: RE: Delek Requests for No Action Assurance for Critical Infrastructure Facilities -- Contains CBI

Thanks, Jeff. Confirming we have received this and will take a look.

Best,
Mandy

From: Holmstead, Jeff <jeff.holmstead@bracewell.com>
Sent: Tuesday, March 31, 2020 4:56 PM
To: Bodine, Susan <bodine.susan@epa.gov>
Cc: Idsal, Anne <idsal.anne@epa.gov>; Gunasekara, Mandy <gunasekara.Mandy@epa.gov>
Subject: Delek Requests for No Action Assurance for Critical Infrastructure Facilities -- Contains CBI
Importance: High

On behalf of Delek Refining Company, I am submitting the attached Requests for No Action Assurance for Critical Infrastructure Facilities under your March 26, 2020 memorandum titled *COVID-19 Implications for EPA's Enforcement and Compliance Assurance Program.* Please note that these requests contain confidential business information (CBI) about the financial impact of the COVID-19 pandemic on Delek and its four small refineries.

Please let me know if you need further information regarding these requests or if it would be helpful to schedule a conference call to discuss them.

Best Regards,

Jeff Holmstead

JEFF HOLMSTEAD
Partner
jeff.holmstead@bracewell.com | download v-card
T: +1.202.828.5852 | F: +1.800.404.3970

BRACEWELL LLP
2001 M Street NW, Suite 900 | Washington, D.C. | 20036-3310
bracewell.com | profile | LinkedIn | Twitter

CONFIDENTIALITY STATEMENT
This message is sent by a law firm and may contain information that is privileged or confidential. If you received this transmission in error, please notify the sender by reply e-mail and delete the message and any attachments.

Message

From: Gunasekara, Mandy [/O=EXCHANGELABS/OU=EXCHANGE ADMINISTRATIVE GROUP (FYDIBOHF23SPDLT)/CN=RECIPIENTS/CN=F639EA28AF4C455493939E3129260707-GUNASEKARA,]
Sent: 3/24/2020 5:51:39 PM
To: Bill Koetzle [KoetzleB@api.org]
CC: Rachel Jones [rjones@nam.org]; Troy Lyons [tlyons@axpc.org]; Eisenberg, Ross [Ross_Eisenberg@americanchemistry.com]; Derrick Morgan [DMorgan@afpm.org]; Smythe Anderson [AndersonS@api.org]; Howard Feldman [Feldman@api.org]; Todd Mattingly [MattinglyT@api.org]
Subject: RE: Telephone Call Today

Thank you. Todd, I'll have my scheduling folks follow-up directly with you.
I look forward to talking to everyone soon.
Mandy

From: Bill Koetzle <KoetzleB@api.org>
Sent: Tuesday, March 24, 2020 1:50 PM
To: Gunasekara, Mandy <gunasekara.Mandy@epa.gov>
Cc: Rachel Jones <rjones@nam.org>; Troy Lyons <tlyons@axpc.org>; Eisenberg, Ross <Ross_Eisenberg@americanchemistry.com>; Derrick Morgan <DMorgan@afpm.org>; Smythe Anderson <AndersonS@api.org>; Howard Feldman <Feldman@api.org>; Todd Mattingly <MattinglyT@api.org>
Subject: Telephone Call Today

Mandy, understand we need to find a new time for our call – Todd, cc'd above can help find a time and manage logistics, thank you and take care

Appointment

From: Gunasekara, Mandy [/O=EXCHANGELABS/OU=EXCHANGE ADMINISTRATIVE GROUP (FYDIBOHF23SPDLT)/CN=RECIPIENTS/CN=F639EA28AF4C455493939E3129260707-GUNASEKARA,]
Sent: 3/24/2020 6:46:55 PM
To: Bill Koetzle [KoetzleB@api.org]

Subject: Declined: Call with Troy, Ross, Rachel, and Derrick
Location: Skype

Start: 3/25/2020 8:00:00 PM
End: 3/25/2020 9:00:00 PM
Show Time As: Busy

Message

From: Gunasekara, Mandy [/O=EXCHANGELABS/OU=EXCHANGE ADMINISTRATIVE GROUP (FYDIBOHF23SPDLT)/CN=RECIPIENTS/CN=F639EA28AF4C455493939E3129260707-GUNASEKARA,]
Sent: 3/24/2020 5:55:45 PM
To: MattinglyT@api.org; Willis, Sharnett [Willis.Sharnett@epa.gov]
Subject: Move COVID-19 Phone Call with Rachel Jones

Sharnett,
Can you work with Todd (cc'd) to move the NAM call we had originally set up with Rachel Jones? I've got another meeting that has popped up at the 4:30 time and Rachel Jones has been pulled into a family emergency.
Thank you,
Mandy

Message

From: Gunasekara, Mandy [/O=EXCHANGELABS/OU=EXCHANGE ADMINISTRATIVE GROUP (FYDIBOHF23SPDLT)/CN=RECIPIENTS/CN=F639EA28AF4C455493939E3129260707-GUNASEKARA,]
Sent: 4/8/2020 10:10:03 PM
To: Schiermeyer, Corry [schiermeyer.corry@epa.gov]; Woods, Andrea [Woods.Andrea@epa.gov]
CC: frank.maisano@bracewell.com
Subject: Connect

Corry and Andrea – I'm connecting you with Frank. He's going to call you in a bit to touch base on a few items.

Mandy M. Gunasekara
Chief of Staff, US EPA
(202) 564-6999

Message

From: Gunasekara, Mandy [/O=EXCHANGELABS/OU=EXCHANGE ADMINISTRATIVE GROUP (FYDIBOHF23SPDLT)/CN=RECIPIENTS/CN=F639EA28AF4C455493939E3129260707-GUNASEKARA,]
Sent: 1/7/2021 7:35:24 PM
To: Mandy Gunasekara (gunasekara.Mandy@epa.gov) [gunasekara.Mandy@epa.gov]
CC: Barker, Kendal [Barker.Kendal@epa.gov]
BCC: patrickwyrick Ex. 6 doug@deasoncap.com; lynne.hames@clr.com; leonard.leo@fed-soc.org; CMitchell@foley.com; maswift Ex. 6 Rick@thirdcircle.us; drivkin@bakerlaw.com; jacny Ex. 6 tracyzielke Ex. 6 charliepolston Ex. 6 carlyn@mattsco.org; bob.wagoner Ex. 6 Joe.craft@arlp.com
Subject: INVITATION: 14th EPA Administrator Scott Pruitt Portrait Unveiling

Dear Friends,

Please join us for the unveiling of the official portrait of the 14th Administrator of the United States Environmental Protection Agency – the Honorable E. Scott Pruitt – hosted by EPA Administrator Andrew Wheeler. The ceremony will take place on **Friday, January 15 from 10:00-11:00 a.m. EST** and will be held in the Green Room at the WJC Building North at 1200 Pennsylvania Avenue, NW.

During the event, we will commemorate former Administrator Pruitt's accomplishments during his tenure and recognize his dedication to protect human health and the environment. Light refreshments will be provided immediately following the event. Please RSVP to Kendal Barker (cc'd here) by January 12 at 5 p.m.

Please let me know if you have any questions and I hope you can join this special event!

Regards,
Mandy

Mandy M. Gunasekara
Chief of Staff, US EPA
C: 202-923-5320
"We serve at the pleasure of the President."

Message

From: Gunasekara, Mandy [/O=EXCHANGELABS/OU=EXCHANGE ADMINISTRATIVE GROUP (FYDIBOHF23SPDLT)/CN=RECIPIENTS/CN=F639EA28AF4C455493939E3129260707-GUNASEKARA,]
Sent: 3/24/2020 1:24:48 PM
To: Frank Macchiarola [MacchiarolaF@api.org]
CC: Bodine, Susan [bodine.susan@epa.gov]; Bolen, Brittany [bolen.brittany@epa.gov]; Bill Koetzle [KoetzleB@api.org]; Howard Feldman [Feldman@api.org]
Subject: Re: API Letter to Administrator Wheeler 3/23/20

Thank you, Frank. This is very helpful. Will be in touch.

Sent from my iPhone

On Mar 23, 2020, at 4:49 PM, Frank Macchiarola <MacchiarolaF@api.org> wrote:

Please find attached a letter from API to Administrator Wheeler dated 3/23/20 regarding non-essential compliance discretion and critical infrastructure designations. Also, please find attached a referenced letter from API's Mike Sommers to President Donald J. Trump of 3/20/20. Please let me know if you have any questions. Thank you for your attention to this matter.
Best,
Frank
<Letter to Admin Wheeler 3.23.20-final copy.pdf>
<3.20.2020 API Letter to President Trump.pdf>

Message

From: Gunasekara, Mandy [/O=EXCHANGELABS/OU=EXCHANGE ADMINISTRATIVE GROUP (FYDIBOHF23SPDLT)/CN=RECIPIENTS/CN=F639EA28AF4C455493939E3129260707-GUNASEKARA,]
Sent: 9/30/2020 1:34:52 PM
To: Roberts, Malcolm (Senator) [Senator.Roberts@aph.gov.au]
CC: Myron.Ebell@cei.org
Subject: RE: Commonwealth Scientific and Industrial Research Organisation (CSIRO) | Report compiled by Senator Malcolm Roberts

Sen Roberts/Sheenagh,

Thank you for passing this information along. I will flag it for the Administrator and look forward to staying in touch.

Best,
Mandy

From: Roberts, Malcolm (Senator) <Senator.Roberts@aph.gov.au>
Sent: Wednesday, September 30, 2020 1:34 AM
To: Gunasekara, Mandy <gunasekara.Mandy@epa.gov>
Cc: Myron.Ebell@cei.org
Subject: Commonwealth Scientific and Industrial Research Organisation (CSIRO) | Report compiled by Senator Malcolm Roberts

Dear Ms Gunasekara

Senator Roberts would like to share our office's work on the Australian government's climate science agency, the Commonwealth Scientific and Industrial Research Organisation (CSIRO).

The CSIRO is a major contributor to the UN's Intergovernmental Panel on Climate Change.

The key conclusions are listed on page 2 in our Executive Summary.

Please note that these points are not opinions - they are observations of CSIRO's behaviour and failings and as such, cannot be sensibly refuted.

The conclusion is that there is no empirical scientific evidence for the government's climate policies.

Now that CSIRO has been unmasked the onus is on the Australian government to prove scientifically that there is any scientific basis for the UN's climate claims.

We would appreciate it very much if you could please forward this email onto Mr Andrew Wheeler and note that we would like to stay in touch with your office, as we have further material to send you on the senator's exchanges with NASA's Goddard Institute of Space Studies regarding its unfounded climate claims.

If we can assist you in any way to restore scientific integrity, please contact our office. We are ready to assist you in this battle to restore science and freedom.

Attachments

- Restoring Scientific Integrity
- Executive Summary of report
- The Hidden Cost of Climate Policies and Renewables by Dr Alan Moran

Kind Regards

Sheenagh Langdon
Office Manager for Senator Malcolm Roberts

Electorate Office
Level 36, Waterfront Place
1 Eagle Street, Brisbane QLD 4000
T: (07) 3221 9099
Canberra Office
T: 02 6277 3694
W: https://www.malcolmrobertsqld.com.au

Appointment

From: Gunasekara, Mandy [/O=EXCHANGELABS/OU=EXCHANGE ADMINISTRATIVE GROUP (FYDIBOHF23SPDLT)/CN=RECIPIENTS/CN=F639EA28AF4C455493939E3129260707-GUNASEKARA,]
Sent: 3/24/2020 6:51:27 PM
To: Bill Koetzle [KoetzleB@api.org]

Subject: Accepted: Call with Trades
Location: Call

Start: 3/25/2020 8:00:00 PM
End: 3/25/2020 9:00:00 PM
Show Time As: Busy

Message

From: Gunasekara, Mandy [/O=EXCHANGELABS/OU=EXCHANGE ADMINISTRATIVE GROUP (FYDIBOHF23SPDLT)/CN=RECIPIENTS/CN=F639EA28AF4C455493939E3129260707-GUNASEKARA,]
Sent: 3/23/2020 2:10:54 AM
To: Smythe Anderson [AndersonS@api.org]
CC: Will Hupman [HupmanW@api.org]
Subject: Re: API Letter to White House

Smythe,

Thank you for the note. I've passed the letter on to Susan and her team. We are looking to have some public guidance on the compliance issues - that have been raised by a ton of folks - early this week.

As far as seasonal fuel requirements, Anne/Alex have been running point in OAR. They've had a number of meetings and will be following up soon.

I hope you are well!

Mandy

Sent from my iPhone

On Mar 20, 2020, at 1:11 PM, Smythe Anderson <AndersonS@api.org> wrote:

Mandy –

Welcome back to EPA. Quite a week to start your new job.

I wanted to flag the attached letter from API CEO Mike Sommers to President Trump related to the COVID-19 pandemic. Of note, it requests a temporary waiver from non-essential compliance obligations at EPA, including seasonal fuel requirements and routine testing and reporting requirements.

Please let me know if you would like to discuss this in greater detail. I can make myself available at your convenience.

Regards,
Smythe

Smythe Anderson
Director | Federal Relations
American Petroleum Institute | 200 Massachusetts Ave NW | Washington, DC 20001

O: 202.682.8040
M: 202.255.5075

AndersonS@api.org

www.api.org

<2020-03-20 API Letter to President Trump.pdf>

Message

From: Bill Koetzle [KoetzleB@api.org]
Sent: 8/27/2020 7:14:50 PM
To: Gunasekara, Mandy [gunasekara.Mandy@epa.gov]
Subject: can you give me a call when you get a chance? 202 701 0889

Bill Koetzle
Senior VP Government Affairs, API

Message

From: Bill Koetzle [KoetzleB@api.org]
Sent: 3/24/2020 5:50:22 PM
To: Gunasekara, Mandy [gunasekara.Mandy@epa.gov]
CC: Rachel Jones [rjones@nam.org]; Troy Lyons [tlyons@axpc.org]; Eisenberg, Ross [Ross_Eisenberg@americanchemistry.com]; Derrick Morgan [DMorgan@afpm.org]; Smythe Anderson [AndersonS@api.org]; Howard Feldman [Feldman@api.org]; Todd Mattingly [MattinglyT@api.org]
Subject: Telephone Call Today

Mandy, understand we need to find a new time for our call – Todd, cc'd above can help find a time and manage logistics, thank you and take care

Appointment

From: Birsic, Michael J. [mjbirsic@marathonpetroleum.com]
Sent: 4/16/2020 12:20:55 PM
To: Walas, Fred [fawalas@marathonpetroleum.com]; Menefee, Jake E. [jakeemenefee@marathonpetroleum.com]; Gunasekara, Mandy [gunasekara.Mandy@epa.gov]

Subject: EPA-MPC Biointermediates Petition Call
Location: Ex. 6 Passcode: Ex. 6

Start: 4/17/2020 5:30:00 PM
End: 4/17/2020 6:00:00 PM
Show Time As: Tentative

Recurrence: (none)

Join Skype Meeting

Trouble Joining? Try Skype Web App

Join by phone

Toll number: Ex. 6 (Dial-in Number) English (United States)

Find a local number

Conference ID: Ex. 6

Forgot your dial-in PIN? | Help

Message

From: Broome, Shannon S. [SBroome@hunton.com]
Sent: 7/25/2020 9:51:52 PM
To: Wheeler, Andrew [wheeler.andrew@epa.gov]
CC: Bodine, Susan [bodine.susan@epa.gov]; Idsal, Anne [idsal.anne@epa.gov]; Leopold, Matt (OGC) [Leopold.Matt@epa.gov]; Gunasekara, Mandy [gunasekara.Mandy@epa.gov]; Irving, John [Irving.John@epa.gov]; Jordan, Scott [Jordan.Scott@epa.gov]; Tsirigotis, Peter [Tsirigotis.Peter@epa.gov]; DawnBlancaflor@packagingcorp.com; Knauss, Chuck [CKnauss@hunton.com]; Ellis, Clare [CEllis@hunton.com]
Subject: Petition for Reconsideration Pulp and Paper NESHAP, 40 CFR Part 63

Dear Administrator Wheeler:

You should now have received a Petition on behalf of Packaging Corporation of America and accompanying attachments in a series of five (5) total e-mails. In case it would be more convenient for you and your staff, I am also providing a secure link from which the documents can be downloaded.

The following link and password provide the documents:

Ex. 6

Password: Ex. 6

Thank you.

Best Regards,

HUNTON ANDREWS KURTH

Shannon S. Broome
Partner/Office Managing Partner San Francisco
sbroome@HuntonAK.com
p 415.975.3718
202.955.1912
m 415.818.2275

bio | vCard |

Hunton Andrews Kurth LLP
50 California Street
Suite 1700
San Francisco, CA 94111

2200 Pennsylvania Avenue, NW
10th Floor
Washington, DC 20007
HuntonAK.com

This communication is confidential and is intended to be privileged pursuant to applicable law. If the reader of this message is not the intended recipient, please advise by return email immediately and then delete this message and all copies and backups thereof.

Appointment

From: MattinglyT@api.org [MattinglyT@api.org]
on behalf of Bill Koetzle [KoetzleB@api.org]
Sent: 3/24/2020 6:48:33 PM
To: Eisenberg, Ross [Ross_Eisenberg@americanchemistry.com]; Rachel Jones [rjones@nam.org]; Derrick Morgan [DMorgan@afpm.org]; Gunasekara, Mandy [gunasekara.Mandy@epa.gov]; Smythe Anderson [AndersonS@api.org]
CC: Willis, Sharnett [Willis.Sharnett@epa.gov]

Subject: Call with Trades
Location: Call

Start: 3/25/2020 8:00:00 PM
End: 3/25/2020 9:00:00 PM
Show Time As: Tentative

Recurrence: (none)

Join Skype Meeting

Trouble Joining? Try Skype Web App

Join by phone

Toll number: Ex. 6 (Dial-in Number) English (United States)

Find a local number

Conference ID: Ex. 6

Forgot your dial-in PIN? | Help

Message

From: Smythe Anderson [AndersonS@api.org]
Sent: 8/13/2020 3:17:56 PM
To: Gunasekara, Mandy [gunasekara.Mandy@epa.gov]
Subject: API Press Release: Methane

Mandy – In advance of the announcement this afternoon, please see API's press release below. Don't hesitate to let me know if you have any questions. Smythe

American Petroleum Institute

NEWS RELEASE

API: EPA Methane Rules Enable Continued Emissions Reductions and Realign with Agency's Statutory Obligations

WASHINGTON, August 13, 2020 – The American Petroleum Institute (API) issued the following statement on the U.S. Environmental Protection Agency's (EPA) finalized changes to the New Source Performance Standards (NSPS) for oil and natural gas facilities. The modified technical and policy rules further align the agency with its statutory obligations under the Clean Air Act while enabling continued emissions reductions, protecting public health and the environment.

"We support this revision as it is consistent with the requirements of the Clean Air Act," API Senior Vice President of Policy, Economics and Regulatory Affairs Frank Macchiarola said. "Our industry continues to drive down methane emissions from operations while meeting America's energy needs every day. Under these modified rules, operators will still be required to control emissions, and the industry continues to make progress in reducing methane emissions through new technologies. Thanks to measurable industry initiatives like The Environmental Partnership, methane emission rates from five of the largest producing regions across the U.S. have fallen more than 60 percent from 2011 to 2018 – even as production in those regions has increased dramatically."

For nearly a decade, EPA officials have been clear that NSPS targeting of emissions of volatile organic compounds (VOCs) "will also decrease methane emissions," negating the need for another layer of government regulation. An API issue brief explains the industry's success in reducing emissions and the background of NSPS regulation of VOCs, which has reduced methane emissions as a co-benefit.

In the Permian Basin, production surged 170 percent from 2011 to 2018, but methane emissions relative to production declined nearly 45 percent. In the Eagle Ford basin, production grew 140 percent over the same period, and methane emissions relative to production fell more than 70 percent. A study by the National Oceanic Atmospheric Administration also found that overall U.S. methane emissions have remained flat since 2006 despite increased oil and natural gas production.

API represents all segments of America's oil and natural gas industry. Our more than 600 members produce, process and distribute most of the nation's energy. The industry supports more than ten

million U.S. jobs and is backed by a growing grassroots movement of millions of Americans. API was formed in 1919 as a standards-setting organization. In our first 100 years, API has developed more than 700 standards to enhance operational and environmental safety, efficiency and sustainability.

Message

From: Smythe Anderson [AndersonS@api.org]
Sent: 4/13/2020 9:19:38 PM
To: Gunasekara, Mandy [gunasekara.Mandy@epa.gov]; Raymond, Kelley [Raymond.Kelley@epa.gov]; Doyle, Brett [doyle.brett@epa.gov]
Subject: Embargoed API Press - PM NAAQS
Attachments: ATT00001.txt

Good afternoon – Tomorrow, API will publish the below press release on PM NAAQS. Don't hesitate to let me know if you have any questions.

Regards,
Smythe

Smythe Anderson
Director | Federal Relations
American Petroleum Institute | 200 Massachusetts Ave NW | Washington, DC 20001

O: 202.682.8040
M: 202.255.5075

AndersonS@api.org

www.api.org

NEWS

FOR IMMEDIATE RELEASE

202.682.8114 | press@api.org |

energy API

API welcomes EPA proposal to maintain existing air quality standards

WASHINGTON, April 14, 2020 – Today, the American Petroleum Institute released the following statement on the Environmental Protection Agency's (EPA) proposed rule on the Particulate Matter (PM) National Ambient Air Quality Standards (NAAQS), which recommends retaining all six of the current standards. API participated throughout the agency's public process of developing science and policy documents that are the basis for this proposed rule.

"Many industry groups across America – including ours – agree that EPA's proposed rule is a smart balance that will further reduce emissions and help protect public health while meeting America's energy needs," API Senior Vice President of Policy, Economics and Regulatory Affairs Frank Macchiarola said. "The U.S. has made significant progress in this area as the U.S. has reduced $PM_{2.5}$ annual concentrations by 39 percent since 2000. This proposal is an important step toward continuing this progress. We are reviewing EPA's proposal and intend to provide public testimony and comments to the regulatory docket."

Since 2000, the U.S. has reduced emissions that can contribute to PM, including reducing SO_2 84% while NO_x air releases are down 54%. Continued implementation of existing regulations can help continue this trend.

Estimated economic impacts of previous potential avenues for NAAQS regulation, coupled with the evidence presented in the proposed rule that there isn't compelling new evidence to lower the annual standard, further support EPA's proposal to retain the current PM NAAQS.

API represents all segments of America's oil and natural gas industry. Its more than 600 members produce, process, and distribute most of the nation's energy. The industry supports 10.9 million U.S. jobs and is backed by a growing grassroots movement of millions of Americans. API was formed in 1919 as a standards-setting organization. In its first 100 years, API has developed more than 700 standards to enhance operational and environmental safety, efficiency and sustainability.

###

Message

From: Maisano, Frank [frank.maisano@bracewell.com]
Sent: 4/14/2020 8:34:42 PM
To: Gunasekara, Mandy [gunasekara.Mandy@epa.gov]; Schiermeyer, Corry [schiermeyer.corry@epa.gov]
Subject: Thoughts, Background on NAAQS

Friends,

In place of today's COVID report (for which we don't have any new info), I wanted to pass along a few items including background/thoughts on today's NAAQS announcement by EPA. Included are contacts for former EPA Air head Jeff Holmstead, a few statements from industry trade groups and some BACKGROUND thoughts on the Harvard study.

It is important to consider that:

- EPA is mandated to do this every five years by Congress
- Independent peer reviewers (scientists on CASAC) recommended maintaining current levels
- PM is down 40% based on company actions - manufacturing, cement, energy.

Call with questions...

Frank Maisano
202-997-5932

1) Former EPA Air Administrator Holmstead – My Bracewell colleague Jeff Holmstead, former EPA Air Office head, is available to discuss the details of the program and EPA's move. Holmstead said:

- *It's certainly no surprise to anyone that EPA is proposing to keep the current standards in place for another 5 years. This is what CASAC recommended in its formal report to the Administrator.*
- *It is premature to talk about the legal defensibility to the rule because it's only a proposal. We need to see the comments that will be submitted on the proposal and how EPA responds to those comments.*
- *That said, if there are no surprises in the comments and EPA ultimately decides to leave the PM2.5 standards in place, it will be on solid legal ground because of the CASAC recommendation. I don't think the Courts have ever faulted EPA for following CASAC's recommendations on any national ambient air quality standard.*

You can reach him at jeff.holmstead@bracewell.com should you have additional questions.

2) American Petroleum Institute – API also participated throughout the agency's public process of developing science and policy documents that are the basis for this proposed rule. They added:

> *"Many industry groups across America – including ours – agree that EPA's proposed rule is a smart balance that will further reduce emissions and help protect public health while meeting America's energy needs," API Senior Vice President of Policy, Economics and Regulatory Affairs Frank Macchiarola said. "The U.S. has made significant progress in this area as the U.S. has reduced PM2.5 annual concentrations by 39 percent since 2000. This proposal is an important step toward continuing this progress. We are reviewing EPA's proposal and intend to provide public testimony and comments to the regulatory docket."*

Since 2000, the U.S. has reduced emissions that can contribute to PM, including reducing SO2 84% while NOx air releases are down 54%. Continued implementation of existing regulations can help continue this trend.

Estimated economic impacts of previous NAAQS proposals, coupled with the lack of compelling new evidence to lower the standards underlying this proposed rule, support EPA's proposal to retain the current PM NAAQS.

3) **Chamber Global Energy Institute** – Marty Durbin, President of the U.S. Chamber's Global Energy Institute, said while they will review the proposal in detail over the coming weeks, the Chamber commends EPA for its efforts to advance a timely review of National Ambient Air Quality Standards for particulate matter as required by the Clean Air Act, and for its decision to retain the current standards in accordance with the recommendations of its clean air scientific advisory committee.

> *"The United States has made considerable progress improving air quality, with particulate matter emissions down 39% since 2000 during a period of population and economic growth. These successes are the direct result of collaborative efforts among industry, states, and the federal government to develop and incorporate cleaner technologies, and we look forward to further progress in the years ahead."*

For more background on the progress made to make America's air cleaner, visit the GEI "Fuel for Thought" blog.

4) American Fuel & Petroleum Manufacturers – AFPM head Chet Thompson said they join other industry groups and the Clean Air Scientific Advisory Committee in support of the EPA's proposal to retain current health and environment air quality standards.

> *"The United States has made incredible progress on reducing emissions, while continuing to deliver the essential fuel and petrochemical products that serve as the backbone of the global economy. Since 2000, PM2.5 concentrations have dropped 39%, contributing to a nearly 75% decrease in combined pollutant emissions over the last 50 years. This proposal to maintain the standards will continue this progress and contribute to a cleaner and healthier environment."*

5) **Harvard Study BACKGROUND ONLY (NOT FOR ATTRIBUTION)** – While EPA has been addressing questions about the Harvard study directly, I came across a good summary of points for your consideration. Please use as BACKGROUND ONLY.

- **Study Did Not Go Through Any Peer Review –** While COVID-19 underscores that the sharing of scientific information and open data is critical to addressing current and future crises, it is irresponsible to give weight to these findings prior to any peer review process.

- **Study's Design is Flawed** – It claims to be a national study but it the absence of patient-specific data renders all other comparisons and conclusions in the study meaningless.

  - Most Americans are well aware that age and pre-existing health conditions such as hypertension, obesity, heart disease, and asthma are major risk factors for COVID-19. Amazingly, the study does not even acknowledge these patient-specific factors, much less attempt to take them into account. This can lead to enormous distortions in data, especially given that the study includes data from counties with sample sizes as low as 10 cases.

  - The study attempts to control for variables like population density, poverty, income, number of hospital beds in the county and age, but only at the county or state level. As a result, their variables have virtually no effect compared against the characteristics of the actual individuals that have tested positive/died from COVID-19. One simply cannot draw any scientific conclusions on COVID-19 risk factors without correcting for other major influencers such as age, co-morbidities and other critical factors like whether someone was hospitalized, for how long, symptoms, use of a ventilator, quality of care.

- The study compares average annual fine particulate matter levels from 2000 to 2016 to deaths from COVID-19 in the last couple months (through April 4, 2020). This ignores years of available data, dramatic trends in fine particulate matter (40% reduction in the U.S. over that period).

- Urban areas tend to have higher air pollution but, even if you control for county-level factors like smoking or average income or age, the study missed numerous other reasons why people in cities may be more likely to be impacted by COVID-19.

- **Study Seems to Misunderstand Nature of Air Pollution, Fine Particulate Matter. (This is from EPA data)**

  - In the entire U.S., only 9 full counties and 7 partial counties (out of more than 3,000) do not meet the most recent national standards for fine particulate matter.

  - In the northeast, where the two states with highest death figures as of today are located, fine particulate matter levels have dropped by 47% between 2000 and 2018.

  - Over the period of the study, the U.S. has had far lower fine particulate matter levels than nearly any country.

  - There are only 1,000 fine particulate matter monitoring sites in the country which Means that impacted folks may live significant distances from a monitor in their county or state.

  - It is important to note that fine particulate matter is more than just man-made pollution. Mobile sources (cars, planes, trains, lawnmowers) emit just 7% of fine particulate matter in the U.S., less than half of emissions from wildfires or dust in any given year.

FRANK MAISANO
Senior Principal
Ext. 5864
Policy Resolution Group

Message

From: Myron Ebell [Myron.Ebell@cei.org]
Sent: 8/22/2020 5:55:29 PM
To: Paul Teller [Ex. 6] Brooke Rollins [Ex. 6]; Francis Brooke [Ex. 6]; Martin.J.Dannenfelser2 [Ex. 6] Belsis.F.Romero [Ex. 6] Derek Kan [Ex. 6] Russ Vought [Ex. 6] John Fleming [Ex. 6] Mark Meadows [Ex. 6]; Gunasekara, Mandy [gunasekara.Mandy@epa.gov]
Subject: Trump set to block Pebble???!!!

If this is true, it's beyond outrageous. Are we back to the Bush administration? The conservative movement could be spending its time on promoting the Trump agenda instead of wasting it trying to keep you from going into the ditch.

https://gcc01.safelinks.protection.outlook.com/?url=https%3A%2F%2Fwww.politico.com%2Fnews%2F2020%2F08%2F22%2Ftrump-set-to-block-alaska-pebble-mine-400206&data=02%7C01%7Cgunasekara.Mandy%40epa.gov%7C85c01f3a299e49c90ff508d846c494d6%7C88b378b367484867acf976aacbeca6a7%7C0%7C0%7C637337157885458892&sdata=K%2FnINvUEBjv2UaSffhXbMOKKQ7euDSNbnnX8jNZwKl0%3D&reserved=0

Myron Ebell
Director, Center for Energy and Environment
Competitive Enterprise Institute
Tel: (202) 331-2256
Mobile: (202) 320-6685
E-mail: Myron.Ebell@cei.org

Message

From: Myron Ebell [Myron.Ebell@cei.org]
Sent: 5/4/2020 2:50:35 PM
To: Myron Ebell [Myron.Ebell@cei.org]
Subject: Reminder: Cooler Heads Coalition online meeting at 2 PM tomorrow--Tuesday

The Cooler Heads Coalition will hold a Zoom meeting from 2 to 3 PM on Tuesday, 5th May. Thank you if you have already registered.
To register, please go to:

Ex. 6

After your registration has been confirmed, one hour before the meeting you will receive an e-mail with a link to the meeting. Each attendee will have a unique link.

Amanda France, our in-house Zoom expert, advises that the size of the meeting will likely be too large to display everyone on the screen. Instead, the meeting will be more webinar-style. The speakers will be on the screen, and anyone who wishes to speak can either type a comment into the Q&A box or click the button to "raise your hand".

If you would like to be on the agenda or have an announcement or item for the agenda, please e-mail or ring me at (202) 320-6685 today.

On the agenda so far:

- Michael Bloomberg and Gina McCarthy op-ed pasted below and Harvard "study"
- Scientific transparency supplemental rule--public comments due 18th May
- Energy subsidies and green riders in the next spending/bailout extravaganza
- Reconsidering the Endangerment Finding update
- Litigation update
- Discussion of the post Wuhan virus landscape

https://www.bloomberg.com/opinion/articles/2020-05-04/how-trump-s-epa-is-making-covid-19-more-deadly

Editorial Board

How Trump's EPA Is Making Covid-19 More Deadly

A respiratory pandemic is no time to roll back air-pollution rules.

By Michael R. Bloomberg and Gina McCarthy

May 4, 2020, 5:30 AM EDT

President Donald Trump has failed in multiple ways to lead an effective fight against the coronavirus.

Among the most troubling is his push to increase air pollution in the midst of an unprecedented respiratory pandemic — jeopardizing people's ability to survive it — while the nation's attention is focused on the emergency at hand.

Scientists are warning us that air pollution makes Covid-19, which strikes at the lungs, more deadly. Nonetheless, in the space of about a month, the president has repeatedly undermined rules limiting air pollution. Tens of thousands of Americans will die as a result.

A recent Harvard study shows that even a tiny increase in fine particulate matter air pollution — commonly known as "soot" — increases death rates from Covid-19. Hit the hardest are low-income communities and people of color, who are disproportionately exposed to pollution sources, such as highways and refineries.

Despite this danger, the Trump administration has launched a series of attempts to make our air dirtier and harder to breathe.

First, the Environmental Protection Agency told coal, oil and gas, and power producers they were free to ignore pollution monitoring and reporting obligations – as long as they use the coronavirus pandemic as an excuse. But there's little reason these companies can't comply with these rules because of the virus. In fact, releasing them from pollution monitoring requirements will only make the health crisis — and thus the economic crisis — worse. Soot pollution has already risen considerably under the Trump administration, and this move will surely exacerbate the problem.

Second, the Trump administration rolled back the higher fuel efficiency and tailpipe emission standards that would drastically cut health-harming and climate-changing air pollution from the nation's cars and trucks. Since these standards were put in place in 2010, the industry has thrived, achieving record sales, and drivers saved $89 billion in fuel costs. But Trump's rollback means the average fuel economy will reach only 40 mpg in 2025 compared with 46.5 mpg under the Obama-era rules. That's a standard the industry is likely to hit even without the requirement. Based on EPA estimates, abandoning the higher standard will result in nearly 1,000 more people dying prematurely from air pollution.

Third, the EPA turned down an opportunity to save more than 12,000 lives a year by issuing a more protective federal limit on harmful soot, even though EPA scientists identified a number of recent studies pointing out major health benefits associated with stronger federal limits. This happened right as we are facing a historic health crisis that is attacking people with lung and heart ailments associated with breathing dirty soot-filled air.

As if that weren't enough, the Trump administration followed all of this up by undermining Obama-era rules on mercury and toxic chemicals emitted by power plants — rules that were saving more than 10,000 lives, avoiding 130,000 asthma attacks and nearly 5,000 heart attacks a year. Even though utilities have already installed mercury controls and are complying with the rules, and even though mercury emissions are now plummeting and therefore saving lives, the administration once again cherry-picked health studies to undermine a significant step forward in reducing air pollution.

With a highly contagious lung disease raging, President Trump found four ways to make air pollution worse. This quartet of decisions is especially toxic. And the Trump administration itself has warned more regulatory rollbacks are coming. In his inaugural address, Trump spoke of "American carnage." He is delivering just that. It doesn't have to be like this. And we must not accept it.

As we look to rebuild from this crisis, we must recognize that a healthy global economy cannot exist without healthy people. And as Congress prepares the next coronavirus stimulus package, rather than propping up the industries that have been degrading our health for too long, we should be investing in industries like clean energy that will not only put people back to work but also won't endanger us into the future.

We must demand that our elected leaders put people, not polluters, first.

Michael R. Bloomberg, the former mayor of New York City and a Global Ambassador for the World Health Organization, is the founder and majority owner of Bloomberg LP, the parent company of Bloomberg News.
Read more opinion Follow @MikeBloomberg on Twitter
Gina McCarthy is president and CEO of the NRDC (Natural Resources Defense Council). She was previously administrator of the Environmental Protection Agency from 2013 to 2017.
Read more opinion Follow @GinaEPA on Twitter

Share
Tweet
Post
Email

To contact the editor responsible for this story:
David Shipley at davidshipley@bloomberg.net

Message

From: Broome, Shannon S. [SBroome@hunton.com]
Sent: 7/25/2020 9:25:04 PM
To: Wheeler, Andrew [wheeler.andrew@epa.gov]
CC: Bodine, Susan [bodine.susan@epa.gov]; Idsal, Anne [idsal.anne@epa.gov]; Leopold, Matt (OGC) [Leopold.Matt@epa.gov]; Gunasekara, Mandy [gunasekara.Mandy@epa.gov]; Irving, John [Irving.John@epa.gov]; Jordan, Scott [Jordan.Scott@epa.gov]; Tsirigotis, Peter [Tsirigotis.Peter@epa.gov]; Blancaflor, Dawn [DawnBlancaflor@packagingcorp.com]; Knauss, Chuck [CKnauss@hunton.com]; Ellis, Clare [CEllis@hunton.com]
Subject: Petition for Reconsideration Pulp and Paper NESHAP, 40 CFR Part 63
Attachments: 2020-07-25 PCA Petition for Reconsideration on 1998 Pulp and Paper NESHAP.pdf

Dear Administrator Wheeler:

On behalf of the Packaging Corporation of America ("PCA"), please find attached a Petition to Reconsider and/or Revise the *National Emission Standards for Hazardous Air Pollutants for Source Category: Pulp and Paper Production; Effluent Limitations Guidelines, Pretreatment Standards, and New Source Performance Standards: Pulp, Paper, and Paperboard Category; Final rule*, 63 Fed. Reg. 18,504 (Apr. 15, 1998). Please note that due to size of the files, I will be sending the attachments via a series of separate emails. There are a total of 12 attachments as indicated in the Petition.

We look forward to discussing the Petition with you and moving forward to expeditiously resolve the issues raised herein.

Please contact me with any questions regarding this submittal.

Best Regards,

HUNTON ANDREWS KURTH

Shannon S. Broome
Partner/Office Managing Partner San Francisco
sbroome@HuntonAK.com
p 415.975.3718
202.955.1912
m 415.818.2275

bio | vCard |

Hunton Andrews Kurth LLP
50 California Street
Suite 1700
San Francisco, CA 94111

2200 Pennsylvania Avenue, NW
10th Floor
Washington, DC 20007
HuntonAK.com

This communication is confidential and is intended to be privileged pursuant to applicable law. If the reader of this message is not the intended recipient, please advise by return email immediately and then delete this message and all copies and backups thereof.

HUNTON
ANDREWS KURTH

HUNTON ANDREWS KURTH LLP
50 CALIFORNIA STREET
SUITE 1700
SAN FRANCISCO, CALIFORNIA 94111

2200 PENNSYLVANIA AVENUE, NW
SUITE 900
WASHINGTON, DC 20037

SHANNON S. BROOME
DIRECT DIAL: 415 • 975 • 3718
Direct Dial: 202 • 955 • 1912
EMAIL: SBroome@HuntonAK.com

July 25, 2020

VIA EMAIL & Overnight Courier

The Honorable Andrew R. Wheeler
Administrator, U.S. Environmental Protection Agency
Mail Code 1101A
1200 Pennsylvania Ave., NW
Washington, D.C. 20460

Re: Petition for Reconsideration and/or Revision

Dear Administrator Wheeler:

On behalf of the Packaging Corporation of America ("PCA"), please find attached a Petition to Reconsider and/or Revise the *National Emission Standards for Hazardous Air Pollutants for Source Category: Pulp and Paper Production; Effluent Limitations Guidelines, Pretreatment Standards, and New Source Performance Standards: Pulp, Paper, and Paperboard Category; Final rule,* 63 Fed. Reg. 18,504 (Apr. 15, 1998).

We look forward to discussing the Petition with you and moving forward to expeditiously resolve the issues raised herein. Please contact me at SBroome@HuntonAK.com or 415-975-3718 to discuss at your convenience.

Sincerely,

Shannon S. Broome

Shannon S. Broome

Attachments

cc: Susan Parker Bodine (bodine.susan@epa.gov)
Anne Idsal (idsal.anne@epa.gov)
Matthew Z. Leopold (leopold.matthew@epa.gov)
Mandy Gunasekara (gunasekara.mandy@epa.gov)
John Irving (irving.john@epa.gov)
Scott Jordan (jordan.scott@epa.gov)
Peter Tsirigotis (tsirigotis.peter@epa.gov)
Dawn Blancaflor (DawnBlancaflor@packagingcorp.com)
Chuck Knauss (CKnauss@HuntonAK.com)
Clare Ellis (CEllis@HuntonAK.com)

ED_014208_00000036-00002

BEFORE THE ADMINISTRATOR
UNITED STATES ENVIRONMENTAL PROTECTION AGENCY

IN RE: NATIONAL EMISSION STANDARDS FOR HAZARDOUS AIR POLLUTANTS FOR SOURCE CATEGORY: PULP AND PAPER PRODUCTION; EFFLUENT LIMITATIONS GUIDELINES, PRETREATMENT STANDARDS, AND NEW SOURCE PERFORMANCE STANDARDS: PULP, PAPER, AND PAPERBOARD CATEGORY; FINAL RULE, 63 FED. REG. 18,504 (APR. 15, 1998)	)	DOCKET NOS. A–92–40; A–95–31

PETITION TO RECONSIDER AND/OR REVISE

Pursuant to Section 307(d)(7)(B) of the Clean Air Act ("CAA" or "the Act")[1] and Section 553(e) of the Administrative Procedure Act ("APA"),[2] the Packaging Corporation of America ("PCA") respectfully petitions the U.S. Environmental Protection Agency ("EPA" or "the Agency") to reconsider and/or revise the nationally applicable final action entitled *National Emission Standards for Hazardous Air Pollutants for Source Category: Pulp and Paper Production; Effluent Limitations Guidelines, Pretreatment Standards, and New Source Performance Standards: Pulp, Paper, and Paperboard Category; Final rule,* 63 Fed. Reg. 18,504 (Apr. 15, 1998) ("1998 Final Rule").[3]

---

[1] 42 U.S.C. § 7607(d)(7)(B).

[2] 5 U.S.C. § 551 *et seq*. The D.C. Circuit has explained in *Oljato Chapter of the Navajo Tribe v. Train*, 515 F.2d 654 (D.C. Cir. 1975), that "the public's right to petition the Administrator for revision of a standard of performance and the Administrator's duty to respond substantively to such requests ***exist completely independently*** of Section 307." 515 F.2d at 667 (emphasis added). *See also, e.g., PPG Indus., Inc. v. Costle*, 659 F.2d 1239, 1250 (D.C. Cir. 1981) (counseling that amendment or repeal of a CAA regulation could be sought under APA Section 553(e) in conjunction with Section 307(d)(7)(B) even well outside the 60-day review window). Thus, regardless of the additional provisions for reconsideration under Section 307(d) (*i.e.,* for those issues of central relevance for which it was impracticable to raise issues during or for which grounds arose after the close of the public comment period), the APA provides an independent basis for members of the public like PCA to petition EPA to reconsider and revise the 1998 Final Rule.

[3] The 1998 Final Rule is included as **Attachment 1** to this petition.

PCA owns and operates a pulp and paper mill in Wallula, Washington ("Wallula" or "the facility") that is subject to 40 C.F.R. Part 63, Subpart S ("Subpart S"), the relevant provisions of which were originally established in the 1998 Final Rule. PCA informs EPA that it has also filed a petition for judicial review of the 1998 Final Rule in the United States Court of Appeals for the District of Columbia Circuit[4] and that it intends to raise in that litigation the issues on which reconsideration is requested below.

Executive Summary

In a May 26, 2020 Applicability Determination, EPA announced an interpretation of the 1998 Final Rule that not only was unanticipated during the public comment period but also is inconsistent with the regulatory language, intent, and rulemaking record. It was impracticable for PCA to raise objections to this interpretation during the public comment period for the proposed rule because neither EPA's proposed nor final regulatory language provided notice of the interpretation EPA advanced in the May 26, 2020 Applicability Determination. Indeed, EPA's assertion that secondary exhaust from certain equipment used in the kraft pulping process—specifically, Bauer rotary valves that are the functional equivalent of a chip steamer and use exclusively fresh steam—are subject to the collection and control requirements of Subpart S is irreconcilable with the regulatory language finalized in the 1998 Final Rule.

PCA has been forthright and transparent in its communication with the relevant state and federal regulatory agencies regarding its operations and emissions, and affirmatively sought clarification of rule applicability as far back as 2000. The record shows concurrence of regulators with PCA's interpretation. Now, nearly 20 years later, EPA has offered a new reading of the regulations that is inconsistent with the text and not supported by the record. This shows, at a

[4] PCA is also seeking judicial review of the May 26, 2020 Applicability Determination.

ED_014208_00000036-00004

minimum, an instance of regulated entities not being fairly apprised in advance of the rules by which EPA will judge their behavior. The surprise created by the May 26, 2020 Applicability Determination, given the regulatory language and record, runs contrary to fundamental principles of fairness and at a minimum represents a failure of EPA to publicly state its interpretation and to act transparently.

For the foregoing reasons, PCA respectfully petitions the Administrator to convene a reconsideration proceeding for the 1998 Final Rule to address whether the Applicability Determination constitutes a reasonable interpretation of the regulatory language in the 1998 Final Rule and intended scope of Subpart S control requirements. In doing so, the Agency must withdraw the Applicability Determination at this time, thereby re-affirming the plain language of the 1998 Final Rule with a determination that Bauer valves using exclusively fresh steam are not regulated as part of a "digester system" as defined in the regulations. To the extent that, following reconsideration, the Agency determines that Bauer valves using exclusively fresh steam *should* be encompassed within the regulatory definition of "digester system," PCA submits that this can be accomplished only after complying with the applicable procedural requirements of the CAA and the APA and the directives of Executive Order ("EO") 13892 by establishing a rulemaking docket and proposing for public comment regulatory language to amend the 1998 Final Rule, which would only be enforceable prospectively.

ED_014208_00000036-00005

Background

The 1998 Final Rule was issued pursuant to CAA Section 112's directive for EPA to establish standards applicable to the emission of hazardous air pollutants ("HAPs") from certain major and area sources of HAPs.[5] As a National Emission Standard for Hazardous Air Pollutants ("NESHAP") established under CAA Section 112, Subpart S standards apply to new and existing sources within the source category. For existing sources, EPA is required to determine a "floor" level of control that reflects the emissions limitation achieved by the best performing sources in the category.[6] Section 112 rulemaking dockets, therefore, contain extensive analysis of the performance of existing sources for those emission points being regulated.

Accordingly, in the 1998 Final Rule, EPA established control requirements for vent and condensate streams at certain types of pulp mills, specifying standards for the four types of pulping processes it determined were subject to the NESHAP.[7] For kraft pulping, the process used at the Wallula facility, EPA finalized a requirement to control HAP emissions from certain specifically-named "equipment systems," including "each [low volume, high concentration ("LVHC")] system."[8] The regulations define an LVHC system as "the collection of equipment including the digester . . . system[], and any other equipment serving the same function . . ."[9] "Digester system" is in turn defined to include various types of equipment, including—in relevant part—"chip steamer(s) not using fresh steam . . . and any other equipment serving the same function."[10]

Read together, these provisions of the 1998 Final Rule plainly indicate to regulated entities that chip steamers using exclusively fresh steam are ***not*** part of the "digester system" and are thus

---

[5] 42 U.S.C. § 7412(b).
[6] *Id.* § 7412(d)(3).
[7] 63 Fed. Reg. at 18,518.
[8] *Id.* at 18,619 (codified at 40 C.F.R. § 63.443(a)(1)(i)).
[9] *Id.* at 18,618 (codified at 40 C.F.R. § 63.441).
[10] 63 Fed. Reg. at 18,618 (codified at 40 C.F.R. § 63.441).

ED_014208_00000036-00006

not subject to the control requirements in 40 C.F.R. § 63.443(a)(1)(i)—and that the same is true for "any other equipment serving the same function" as a chip steamer, such as the Bauer rotary valves that have been used at Wallula since the 1998 Final Rule took effect to feed wood fiber (chips or sawdust) from fiber storage bins and dry feed screws to each digester vessel. Unlike many similar facilities, PCA's facility operates, and has always operated, a dry feed system—meaning that the wood fiber fed to the digesters is not pre-conditioned with white or black liquor, and in fact no cooking liquor whatsoever enters the feed screws or the Bauer valves at any point in the process.

While rotating their positions from the feed screw to the digester opening and back to the feed screw, the Bauer valves serve the same function as a chip (or sawdust) steamer.[11] They use exclusively fresh steam for pre- and post-pocket purges and are engineered to prevent digester gases from back-feeding into the pocket feeder and from being vented through the secondary exhaust line (*i.e.*, the pressure of fresh steam supplied to the Bauer valve is consistently maintained at a pressure of 25 p.s.i. greater than the digester working pressure, creating motive force of steam ***into*** the digester and not the other way around). Because the Bauer valves are the functional equivalent of a chip steamer and use, and have always used, exclusively fresh steam (and because the valves are engineered to prevent digester gases from back-feeding into the Bauer valve and escaping via the secondary exhaust line), PCA has never considered them to be part of the digester systems at the facility. And, as explained further below, that conclusion was confirmed by the

[11] *See* **Attachment 2**, Andritz, *M&D Continuous Digester System* (rev. Mar. 3, 2004) at 6 ("Compared to the more-familiar Kamyr digester system, the rotary valve, in spite of the deceptively simple name, performs the roles of the low pressure feeder, steaming vessel, high pressure feeder and top separator.").

ED_014208_00000036-00007

Washington Department of Ecology ("Ecology") in an Applicability Determination dated June 13, 2001,[12]consistent with EPA's intent.[13]

As a result, statements in a 2019 Notice of Violation ("NOV") issued by EPA Region 10 alleging that the facility was in violation of 40 C.F.R. § 63.443 based upon the inspector's "observation" that digester gases were vented from the Bauer rotary valve feeding M&D Digester # 1 to the atmosphere via a secondary "relief" line came as a complete surprise to the company because there was no indication of what interpretation of the regulatory language could lead to such a conclusion.[14] This led PCA to confer with EPA's Office of Air and Radiation—specifically its Office of Air Quality Planning and Standards ("OAQPS"), the office at EPA that authored the regulations—regarding its intent in issuing the 1998 Final Rule. PCA submitted a letter to OAQPS on January 24, 2020 detailing its operations and interpretation of Subpart S with respect to operation of the Bauer valves.[15] The January 24, 2020 letter explained the configuration of PCA's digesters and the company's long-standing understanding that any emissions from the secondary exhaust line that might be emanating from the Bauer rotary valve were not covered by Subpart S control requirements. It provided extensive information regarding the relevant regulatory provisions and EPA guidance, as well as a previous determination PCA had received from Ecology.[16] The January 24, 2020 letter concluded by seeking EPA's concurrence in the analysis

---

[12] **Attachment 3**, Letter from Teddy V. Le, Ecology to Kevin Scott, Boise Cascade Wallula Mill (June 13, 2001).
[13] **Attachment 4**, E-mail from Penny Lassiter, EPA to Bill Dameworth, Pope and Talbot (Apr. 21, 1998) (explaining that EPA "did not intend to capture situations where only fresh steam is used.").
[14] **Attachment 5**, Notice of Violation, *In re Packaging Corporation of America, Inc., Wallula, Washington*, (EPA Region 10 Aug. 8, 2019). EPA's NOV alleges, based upon the inspector's review of a piping and instrumentation diagram (P&ID) provided by the facility, that M&D Digester # 2 had the same configuration as M&D Digester # 1 but was out of service during the 2018 inspection on which the NOV was based. Thus, the NOV allegations with respect to M&D Digester # 2 are based upon the configuration observed by the inspector in the P&ID.
[15] **Attachment 6**, Letter from John Piotrowski, PCA to Robin Dunkins, EPA, OAQPS (Jan., 24, 2020).
[16] *See* Attachment 3.

ED_014208_00000036-00008

of regulatory applicability previously agreed to by Ecology. PCA also sent a written response to EPA Region 10 on January 29, 2020, rebutting the allegations in the 2019 NOV.[17]

On May 26, 2020, EPA's Office of Enforcement and Compliance Assurance ("OECA") sent a response (the "Applicability Determination") to PCA's January 24, 2020 letter.[18] The Applicability Determination expressly recognized that "the Bauer rotary valve on [the facility's] M&D digester is not specifically addressed in the definitions in Subpart S" and that the Agency "intends to address this emission source specifically through a notice and comment rulemaking as part of the next technology review of Subpart S required by CAA section 112(d)(6)."[19] The Applicability Determination did not, however, address the aforementioned gaps in the regulatory language that, based upon a plain language reading, exclude secondary exhaust emissions from the Bauer rotary valve from Subpart S regulation. Rather, EPA simply concluded that "*[i]f HAP emissions originated from the digester are exiting through the Bauer rotary valve at PCA*, Subpart S requires these emissions to be captured and controlled."[20]

The Applicability Determination reflects EPA's new interpretation that the Bauer valves fall within the "digester system" definition in the regulations, notwithstanding that EPA concedes that it should undertake notice and comment rulemaking to address this issue in the regulation.

Bases for Reconsideration

I. EPA Must Convene a Reconsideration Proceeding Where, As Here, Objections of Central Relevance to the Outcome of a Rule Were Impracticable to Raise During the Comment Period and/or Arose After It Closed.

The CAA requires reconsideration of EPA final rules upon petition by an interested party when the terms of Section 307(d)(7)(B) are met, specifically where:

---

[17] **Attachment 7**, Letter from Dawn Blancaflor, PCA to Julie Vergeront *et al.*, EPA Region 10 (Jan. 29, 2020).
[18] **Attachment 8**, Letter from Martha Segall, EPA, OECA to John Piotrowski, PCA (May 26, 2020).
[19] *Id.* at 3.
[20] *Id.* (emphasis added).

ED_014208_00000036-00009

> the person raising an objection can demonstrate to the Administrator that it was ***impracticable to raise such objection*** within [the time provided for public comment] or ***if the grounds for such objection arose after the period for public comment*** (but within the time specified for judicial review) and if such objection is of central relevance to the outcome of the rule.[21]

These criteria for convening a reconsideration proceeding are plainly met. First, the 1996 proposal on which the 1998 Final Rule was based did not provide notice that EPA intended to regulate components like Bauer rotary valves that are using fresh steam and are functionally equivalent to a chip steamer. Thus, it was not practicable to raise an objection to such regulation. Even if that were not the case, the grounds for PCA's objection arose after the close of the comment period, with the issuance of the May 26, 2020 Applicability Determination, which for the first time reflected EPA's interpretation that the Wallula facility's Bauer valve, serving the function of a chip steamer using exclusively fresh steam, would fall within the scope of digester system definition. Third, this issue is of central relevance to the outcome of the rule because the consequence is significant control cost and, had such an intent to regulate been provided in the 1996 proposed rule on which the 1998 Final Rule was based, EPA would have received comments on this aspect of the regulation that would have disputed the basis for such regulation, including comment on any analysis of whether the best performing 12 percent of existing sources were controlling such emissions (to the extent they existed) and on the cost-effectiveness of going beyond such minimum control requirements under CAA Section 112(d)(2)-(3).

In light of these considerations, which are explained in more detail below, EPA must convene a reconsideration proceeding in order to reconsider and/or revise the 1998 Final Rule consistent with the applicable provisions of the CAA and APA. The proceeding should result in a determination that Bauer rotary valves (as described above) are excluded from the regulatory

[21] 42 U.S.C. § 7607(d)(7)(B) (emphases added).

ED_014208_00000036-00010

definition of a "digester system" (as PCA establishes herein), and withdrawal of the Applicability Determination.

II. To the Extent EPA Interprets the 1998 Final Rule to Regulate Bauer Valves Using Fresh Steam as Part of the Digester System, EPA Did Not Provide Notice of that Interpretation, It Was Not Reasonably Ascertainable During the Public Comment Period, and the Interpretation Arose with Issuance of the May 2020 Applicability Determination.

As discussed above, PCA disputes that the rule language provides for regulation of the Bauer valve using fresh steam as part of the digester system. Given that the language of the 1998 Final Rule does not cover this equipment, and that the proposed rule on which the 1998 Final Rule was based did not provide notice that the equipment would be covered, it was impracticable for PCA to raise this issue during the public comment period on the relevant proposal, which means that this criterion for mandatory reconsideration under Section 307(d)(7)(B) has been met. Moreover, given the interpretation that the control requirements in the 1998 Final Rule apply to the Wallula facility's Bauer valve (which performs the same function as a chip steamer and exclusively uses fresh steam) was announced for the first time in the May 26, 2020 Applicability Determination, the grounds for reconsideration arose after the close of the public comment period, which means that the alternative, second criterion for mandatory reconsideration has also been met.[22]

As explained above, the 1998 Final Rule requires owners and operators of kraft pulping systems to control total HAP emissions from certain "equipment systems," including "[e]ach LVHC system."[23] LVHC system is defined to mean "the collection of equipment ***including the digester***, turpentine recovery, evaporator, steam stripper ***systems***, and any other equipment serving

[22] *Id.*
[23] 63 Fed. Reg. at 18,619 (codified at 40 C.F.R. § 63.443(a)(1)(i)).

ED_014208_00000036-00011

the same function as those previously listed."[24] The most natural reading of this definition is that it encompasses the "digester . . . systems" at the facility, which are in turn defined as follows:

> Digester system means each continuous digester or each batch digester used for the chemical treatment of wood or non-wood fibers. The digester system equipment includes associated flash tank(s), blow tank(s), ***chip steamer(s) not using fresh steam***, blow heat recovery accumulator(s), relief gas condenser(s), prehydrolysis unit(s) preceding the pulp washing system, ***and any other equipment serving the same function as those previously listed***. The digester system includes any of the liquid streams or condensates associated with batch or continuous digester relief, blow, or flash steam processes.[25]

A plain language reading of these provisions of the 1998 Final Rule indicates to regulated entities that chip steamers using fresh steam are not part of the "digester system," and thus *not* subject to the control requirements in 40 C.F.R. § 63.443(a)(1)(i)—and that the same is true for "any other equipment serving the same function" as a chip steamer.

This reading of the regulations was confirmed for PCA in the years following issuance of the 1998 Final Rule. In correspondence immediately following the 1998 Final Rule's issuance, Penny Lassiter of EPA's OAQPS (who currently heads the Sector Policy and Programs Division of OAQPS, the division responsible for promulgation of all NESHAPs and at the time was the Agency official responsible for Subpart S) confirmed PCA's reading of the regulation, explaining that "[t]he intent of the rule is to control venting of the chip steamers and venting off of the chip bin if the chip steamer vents through the chip bin where waste or flash steam is used," but that EPA "***did not intend to capture situations where only fresh steam is used***."[26] This was further confirmed in Question and Answer guidance issued by EPA in 2000, in which EPA stated explicitly that "[i]f a chip bin serving the same function as a chip steamer, and the steam entering the chip bin is not fresh steam, then it is considered a chip steamer" and that "chip steamers not

---

[24] *Id.* at 18,618 (codified at 40 C.F.R. § 63.441) (emphases added).
[25] *Id.* (emphases added).
[26] *See* **Attachment 4** (emphasis added).

ED_014208_00000036-00012

using fresh steam are included as part of the digester system definition and would therefore be required to be controlled as part of the [LVHC' system]."[27] This is the "one circumstance," EPA stated, in which chip bins are subject to the NESHAP.[28]

PCA's interpretation was further supported and confirmed by Ecology in June 13, 2001 correspondence, in which Ecology—the permitting authority to which implementation of CAA Section 112 has been delegated—agreed with the facility that "the No. 1 M&D pocket feeder vent ***is not subject to the LVHC collection requirements*** when using only fresh steam in the pre-steaming process."[29] Ecology has re-affirmed this statement over the past nineteen years, in the facility's Title V Permit Statement of Basis—most recently on April 1, 2018, where Ecology stated that "[t]he No. 1 M&D Digester chip/sawdust bin was determined to be an insignificant source of HAPs emissions and to be exempt from regulation under the MACT I [Subpart S] regulatory requirements (Letter dated June 15, 2001)."[30] The Applicability Determination is based upon a

---

[27] EPA, "Questions and Answers (Q&As) for the Pulp and Paper NESHAP, Second Volume (40 CFR Part 63, subpart S)" (Mar. 31, 2000) at 5, available at https://www.epa.gov/sites/production/files/2017-05/documents/10._mact_pulp_and_paper_qa_v2_march_2000.pdf.

[28] *Id.* There is no question that EPA issued Subpart S with gaps. Indeed, the Question and Answer document reflects EPA's intent not to cover certain emission points but rather to target significant emission points in pulping process equipment, and to exclude others from Maximum Achievable Control Technology ("MACT") applicability where they were not being controlled at most facilities. Question 7, for instance, addresses whether 40 C.F.R. § 63.443(a)(1)(i) requires emissions from batch digesters to be controlled when they are uncapped. As EPA explains, "Digester uncapping processes *are not subject to any requirements* under the NESHAP. We *did not cover the uncapping process* because we are aware of only 2 mills that control uncapping emissions. Additionally, essentially all of the contents (pulp and digestion gases) of the batch digester are blown under pressure to the blow tank, and the digester is now at atmospheric pressure. If this is the case, controlling uncapping emissions would not be cost-effective control option for existing or new sources." *Id.* (emphases added). This reflects EPA's consideration of what types of emission points to include in the MACT and its judgment to exclude certain points where the control costs were disproportionate to the benefits of collection.

[29] *See* **Attachment 3** at 1 (emphasis added). Ecology's June 13, 2001 letter confirming the inapplicability of Subpart S was the culmination of several months of correspondence between Boise Cascade (then-owner of the facility) and Ecology. In a May 15, 2001 letter, for instance, Boise Cascade explained in detail the Bauer valve configuration in relation to the facility's M&D digester and specifically requested Ecology's "approval and determination that the secondary exhaust line of the No. 1 M&D Digester is not subject to MACT § 64.554(a)(1)(i) further controls beyond use of fresh pocket purge steam in its present operating configuration." *See* **Attachment 9**, Letter from Kevin Scott, Boise Cascade to Merley McCall, Ecology (May 15, 2001). As noted above, on June 13, 2001 Ecology provided its approval and determination of inapplicability, as Boise Cascade had requested in the May 15, 2001 letter.

[30] *See* **Attachment 10**, Ecology, Title V Permit Statement of Basis, Air Operating Permit No. 0003697 (Mar. 30, 2018) at 35. The 2018 Statement of Basis also lists several "systems" that must meet "existing source" requirements of Subpart S, including LVHC systems—reflecting Ecology's implicit assumption that the Bauer valves are not part

ED_014208_00000036-00013

regulatory interpretation that departs significantly from the plain language of the 1998 Final Rule and EPA's (and other permitting authorities') subsequent guidance on the scope of Subpart S applicability. If the Applicability Determination indicates EPA's intent to expand such applicability beyond the plain language of the regulation, EPA must amend the regulatory language accordingly so that, in the future, regulated entities are on notice of what is subject to the rule.

In sum, reconsideration is mandated and would result in one of two outcomes: (1) EPA re-affirming the plain language of the 1998 Final Rule with a determination that Bauer valves using exclusively fresh steam are not regulated as part of a "digester system," as defined in the regulations and withdrawing the Applicability Determination; or (2) EPA determining that Bauer valves using exclusively fresh steam *should* be encompassed within the regulatory definition of "digester system," which can only be accomplished by revising the regulation. If EPA adopts the second path, it can only enforce that conclusion prospectively.

III. EPA Failed to Provide Regulated Entities With Notice that the 1998 Final Rule Would Be Interpreted as the Applicability Determination Now States.

As originally proposed in 1993 ("the 1993 Proposed Rule"), Subpart S collection and control requirements would have applied to "all" emission points in the pulping process, with exception for certain minor emission points where emissions were below numerical applicability levels set forth in the proposed rule.[31] The rationale behind this methodology for the selection of regulated emission points was to cover "all significant points in the pulping . . . process[]," which

---

of the LVHC or digester "system." *Id.* *See also* Ecology, Title V Permit Statement of Basis, Air Operating Permit No. 0003697 (July 1, 2010) at 19 (reciting nearly the same language of the 2018 Statement of Basis that "[t]he M&D digester was determined to be an insignificant source of HAPs emissions and to be exempt from regulation under the MACT I regulatory requirements)."

[31] EPA, *Effluent Limitations Guidelines, Pretreatment Standards, and New Source Performance Standards: Pulp, Paper, and Paperboard Category; National Emission Standards for Hazardous Air Pollutants for Source Category: Pulp and Paper Production; Proposed rule,* 58 Fed. Reg. 66,078, 66,175 (Dec. 17, 1993) (proposing to exclude certain emission streams from collection and control requirements based upon volumetric flow rate and mass flow rate).

ED_014208_00000036-00014

would be controlled at the MACT floor.[32]

EPA abandoned this approach in an ensuing 1996 proposal ("the 1996 Proposed Rule"), which was the last opportunity for public comment before EPA issued the 1998 Final Rule.[33] In the 1996 Proposed Rule, EPA expressly disclaimed its original proposal to require enclosure and control of "all" pulping component emissions with the exception of certain emission points below the proposed specified applicability thresholds.[34] Explaining that it had re-evaluated the method for establishing control applicability based upon comments and data received in the 1993 Proposed Rule, EPA proposed to "establish control applicability for kraft pulping process equipment systems . . . by specifically defining the equipment systems . . . subject to the MACT standard (*i.e.*, ***only the equipment systems and wastewater streams specifically enumerated would be subject to the standard***)."[35] It further explained that "[t]he named pulping process systems that EPA is considering for control are: ***the LVHC vent system***, pre-washer knotter and screening system, the brownstock washing system, weak black liquor storage tanks, and the oxygen delignification system."[36] Without proposing a specific LVHC system definition, EPA explained that "[t]he LVHC vent system includes . . . the digester blow heat recovery vents, batch digester relief steam condenser vents, continuous digester relief steam vents, turpentine condenser(s) vents, continuous digest blow tank vent, evaporator vacuum system vents, liquor concentrator vacuum system vents,

---

[32] *Id.* at 66,135.
[33] EPA, *National Emission Standards for Hazardous Air Pollutants for Source Category: Pulp and Paper Production; Announcement of availability of supplemental information, proposed rule, and opening of the public comment period for these actions*, 61 Fed. Reg. 9383 (Mar. 8, 1996).
[34] *Id.* at 9389.
[35] *Id.* (emphasis added).
[36] *Id.* (emphasis added); *see also id.* at 9385 ("EPA is considering specifically defining the following systems as requiring enclosure and venting to a control device: the low volume-high concentration (LVHC) vent system (i.e., the digester, turpentine recovery, and evaporator systems); weak black liquor storage tanks; the pre-washer knotting and screening system; the brownstock washing system; and the oxygen delignification system. Enclosure and vent control requirements would not change from proposal. *Only these enumerated systems would be subject to the rule.*") (emphasis added).

ED_014208_00000036-00015

pre-evaporator vacuum system vents, steam stripper feed tank vents, and steam stripper off gas vents."[37]

There was no discussion of or proposal to include secondary exhaust ports from chip steamers (or their functional equivalent) using only fresh steam.[38] EPA requested public comment on this proposal by April 8, 1996, and no further public notices or opportunities for comment were provided before the 1998 Final Rule was issued.[39]

The 1998 Final Rule reflects EPA's efforts, explained in the 1996 Proposed Rule, to identify with specificity those emission points required to be controlled, in order to provide compliance clarity and make the standard more cost-effective to implement. As EPA explained in the 1998 Final Rule, the "applicability cutoffs in the [1993] proposed rule [were] replaced in favor of ***specifically naming process equipment and condensate streams that would be required to meet the rule***."[40] The rationale behind this "revised approach" was that the same result would be

---

[37] 61 Fed. Reg. at 9389.

[38] A review of the administrative record for the 1998 Final Rule supports PCA's reading of the plain regulatory language. Indeed, EPA's floor analysis did not encompass the collection of M&D Digester pocket feed exhaust or Bauer valve secondary exhaust. Specifically, the floor analysis was based primarily upon a pulp and paper industry survey conducted in 1992 by the National Council for Air and Stream Improvement ("NCASI"). *See* **Attachment 11**, Mem., from Danny Greene, Radian Corp. to Penny Lassiter, EPA, "Baseline Level of Controls" at 1 (Feb. 29, 1996), Docket A-29-40, II-D-27 (explaining that the principal data used in the baseline level of control analysis for kraft pulping and other processes were obtained using the 1992 NCASI voluntary mill survey). This survey contained no discussion or inclusion of such exhaust streams. *See* **Attachment 12,** 1992 NCASI Voluntary Survey Excerpt (collecting information on the "fate" of vent gases from various pulping components, not including secondary exhaust). There was no attempt to address Bauer valves on M&D digesters, nor does the survey (or any other Subpart S support documents in the docket) provide information that controls were in place for secondary exhaust from M&D Digester Bauer valves. Rather, the survey data indicate that for continuous digesters, only the primary vents (the digester relief gas vent and digester blow gas vents) were collected and included within the LVHC system vent collection systems at pulp and paper mills, and therefore only those primary vents could have been included in EPA's MACT baseline or floor. EPA did not find any beyond-the-floor controls as cost effective at the time of Subpart S promulgation. An informal survey of mills in the Pacific Northwest and Southwest Canada conducted by Boise Cascade engineering staff in 2000 indicated that no mills that employed M&D continuous digesters for cooking chips or sawdust collected or controlled secondary exhaust from the Bauer rotary valve. Furthermore, at that time, contact with vendors who built vent collection systems for the pulp and paper industry indicated that there were no off-the-shelf systems in place that collected and controlled M&D Digester secondary exhaust and that, if this were to be completed, controls would have to be designed and engineered as entirely new systems. All of the above shows that EPA's floor analysis did not include secondary exhaust and supports the conclusion that the regulatory language cannot be fairly interpreted to include it.

[39] 61 Fed. Reg. at 9384.

[40] 63 Fed. Reg. at 18,519 (emphasis added).

ED_014208_00000036-00016

achieved and would be "easier and less costly to implement, for both the affected industry and the enforcement officials, since extensive emission source testing is not required to identify the vent and condensate streams to be controlled."[41] The 1998 Final Rule specifically defined the process equipment intended to be subject to Subpart S standards, and these definitions are still operative today.[42]

This "equipment-specific" approach was clearly articulated throughout the 1998 Final Rule, as it was in the 1996 Proposed Rule on which EPA took public comments. Nowhere did EPA propose—nor did commenters have a chance to consider—that EPA might apply Subpart S collection and control requirements to emission components other than the equipment specifically identified in the 1996 Proposed and 1998 Final Rules. EPA's interpretation in the Applicability Determination was thus not subject to public comment, notwithstanding the fact that it bears on an issue of central relevance to the rule: the scope of Subpart S collection and control requirement applicability. EPA should thus revisit the 1998 Final Rule to solicit public comment on this issue, and ultimately to revise its Subpart S standards to state which process equipment is subject to the standards on a going-forward basis. EPA's alternative is to withdraw the Applicability Determination and return to its original longstanding interpretation of Subpart S consistent with the plain regulatory language.

---

[41] *Id.* at 18,520. As EPA noted, the revised approach adopted in the 1998 Final Rule did "not significantly change the number of emission points controlled from those intended to be controlled in the proposed rule," as "[t]he emission points and condensate streams that are being controlled in the final rule are fundamentally the same emission sources that EPA intended to be controlled in the proposed rule." *Id.* at 18,519.

[42] *Id.* at 18,618 (codified at 40 C.F.R. § 63.441) (defining "LVHC system" and "digester system").

ED_014208_00000036-00017

IV. In Addition to the Foregoing, EPA Should Convene a Reconsideration Proceeding Because the New Interpretation Reflected in the Applicability Determination Creates Unfair Surprise and Is Therefore Inconsistent with Executive Orders.

On October 9, 2019, the White House issued EO 13892, *Promoting the Rule of Law Through Transparency and Fairness in Civil Administrative Enforcement and Adjudication*, *reprinted at* 84 Fed. Reg. 55,239 (Oct. 15, 2019) ("EO 13892"). EO 13892 supports PCA's position that EPA should convene a reconsideration proceeding on this regulation, providing in relevant part:

- "The rule of law requires transparency. Regulated parties must know in advance the rules by which the Federal Government will judge their actions."[43]

- "Agencies shall act transparently and fairly with respect to all affected parties, … when engaged in civil administrative enforcement or adjudication. ***No person should be subjected to a civil administrative enforcement action or adjudication absent prior public notice of both the enforcing agency's jurisdiction over particular conduct and the legal standards applicable to that conduct***. … Agencies shall afford regulated parties the safeguards described in this order, above and beyond those that the courts have interpreted the Due Process Clause of the Fifth Amendment to the Constitution to impose."[44]

- "When an agency takes an administrative enforcement action, engages in adjudication, or otherwise makes a determination that has legal consequence for a person, ***it may apply only standards of conduct that have been publicly stated in a manner that would not cause unfair surprise. An agency must avoid unfair surprise not only when it imposes penalties but also whenever it adjudges past conduct to have violated the law***."[45]

- "'Unfair surprise' means a ***lack of reasonable certainty or fair warning of what a legal standard administered by an agency requires***. The meaning of this term should be informed by the examples of lack of fair notice discussed by the Supreme Court in *Christopher* v. *SmithKline Beecham Corp.,* 567 U.S. 142, 156 & n.15 (2012)."[46]

The Applicability Determination creates unfair surprise and represents a failure of notice to the regulated community and therefore cannot support enforcement in accordance with fundamental principles of due process and the terms of EO 13892. After more than two decades

---

[43] EO 13892, § 1.
[44] *Id.* (emphasis added).
[45] *Id.* at § 4 (emphasis added).
[46] *Id.* at § 2(e) (emphasis added).

ED_014208_00000036-00018

of implementation, with full and transparent communication by PCA with its permitting authority, EPA's Applicability Determination creates a new interpretation that PCA respectfully maintains mandates convening a reconsideration proceeding.

Relief Requested

For the foregoing reasons, PCA respectfully petitions the Administrator to convene a reconsideration proceeding for the 1998 Final Rule to address whether the Applicability Determination constitutes a reasonable interpretation of the regulatory language in the 1998 Final Rule and intended scope of Subpart S control requirements. In doing so, the Agency must withdraw the Applicability Determination at this time, thereby re-affirming the plain language of the 1998 Final Rule with a determination that Bauer valves using exclusively fresh steam are not regulated as part of a "digester system" as defined in the regulations. To the extent that, following reconsideration, the Agency determines that Bauer valves using exclusively fresh steam *should* be encompassed within the regulatory definition of "digester system," PCA submits that this can be accomplished only after complying with the applicable procedural requirements of the CAA and the APA and the directives of EO 13892 by establishing a rulemaking docket and proposing for public comment regulatory language to amend the 1998 Final Rule, which would only be enforceable prospectively.

ED_014208_00000036-00019

Respectfully Submitted,

/s/Shannon S. Broome
SHANNON S. BROOME
M. CLARE ELLIS
Hunton Andrews Kurth LLP
50 California Street, Suite 1700
San Francisco, CA 94111
(415) 975-3718
SBroome@HuntonAK.com
CEllis@HuntonAK.com

/s/Charles H. Knauss
CHARLES H. KNAUSS
Hunton Andrews Kurth LLP
2200 Pennsylvania Avenue, NW
Washington, D.C. 20037
(202) 419-2003
CKnauss@HuntonAK.com

Counsel for Packaging Corporation of America

ED_014208_00000036-00020

Attachments

1. *National Emission Standards for Hazardous Air Pollutants for Source Category: Pulp and Paper Production; Effluent Limitations Guidelines, Pretreatment Standards, and New Source Performance Standards: Pulp, Paper, and Paperboard Category; Final rule,* 63 Fed. Reg. 18,504 (Apr. 15, 1998).

2. Andritz, *M&D Continuous Digester System* (rev. Mar. 3, 2004).

3. Letter from Teddy V. Le, Ecology to Kevin Scott, Boise Cascade Wallula Mill (June 13, 2001).

4. E-mail from P. Lassiter, EPA to Bill Dameworth, Pope and Talbot (Apr. 21, 1998).

5. Notice of Violation, *In re Packaging Corporation of America, Inc., Wallula, Washington*, (EPA Region 10 Aug. 8, 2019).

6. Letter from John Piotrowski, PCA to Robin Dunkins, EPA OAQPS (Jan., 24, 2020).

7. Letter from Dawn Blancaflor, PCA to Julie Vergeront *et al.*, EPA Region 10 (Jan. 29, 2020).

8. Letter from Martha Segall, EPA, OECA to John Piotrowski, PCA (May 26, 2020).

9. Letter from Kevin Scott, Boise Cascade to Merley McCall, Ecology (May 15, 2001).

10. Ecology, Title V Permit Statement of Basis, Air Operating Permit No. 0003697 (Mar. 30, 2018).

11. Mem., from Danny Greene, Radian Corp. to Penny Lassiter, EPA, "Baseline Level of Controls" (Feb. 29, 1996), Docket A-29-40, II-D-27.

12. 1992 NCASI Voluntary Survey Excerpt.

ED_014208_00000036-00021

CERTIFICATE OF SERVICE

A copy of the preceding was sent on July 25, 2020 to the following via e-mail:

The Honorable Andrew R. Wheeler
Administrator
U.S. Environmental Protection Agency
1200 Pennsylvania Avenue, NW
Mail Code: 1101A
Washington, DC 20460
wheeler.andrew@epa.gov
Fax No: 202-501-1450

The Honorable Anne Idsal
Principal Deputy Assistant Administrator
Office of Air and Radiation
U.S. Environmental Protection Agency
1200 Pennsylvania Avenue, NW
Mail Code: 6101A
Washington, DC 20460
idsal.anne@epa.gov

The Honorable Matthew Z. Leopold
General Counsel
U.S. Environmental Protection Agency
Correspondence Control Unit
Office of General Counsel
1200 Pennsylvania Avenue, NW
Mail Code: 2310A
Washington, DC 20460
leopold.matthew@epa.gov

The Honorable Susan Parker Bodine
Assistant Administrator
Office of Enforcement and Compliance Assurance
U.S. Environmental Protection Agency
1200 Pennsylvania Avenue, NW
Mail Code: 2201A
Washington, DC 20460
bodine.susan @epa.gov

A courtesy copy is being sent via commercial mail carrier.

/s/ Shannon S. Broome
SHANNON S. BROOME

Message

From: Myron Ebell [Myron.Ebell@cei.org]
Sent: 4/28/2020 4:03:52 PM
To: Myron Ebell [Myron.Ebell@cei.org]
Subject: Cooler Heads Coalition next meeting online Tuesday, 5th May, 2 PM

The Cooler Heads Coalition will hold a Zoom meeting from 2 to 3 PM on Tuesday, 5th May.

To register, please go to:

Ex. 6

After your registration has been confirmed, you will receive an e-mail one hour before the meeting with a link to the meeting. Each attendee will have a unique link.

Amanda France, our in-house Zoom expert, advises that the size of the meeting will likely be too large to display everyone on the screen. Instead, the meeting will be more webinar-style. The speakers will be on the screen, and anyone who wishes to speak can either type a comment into the Q&A box or click the button to "raise your hand".

Please e-mail me with agenda items or questions, including problems with using Zoom.

I hope you are staying well and doing well during the shutdown.

Here are links pasted below to a few relevant items and at the end a brief remembrance of Fred Singer, who as most of you probably know died earlier this month:

The Scientific Case for Vacating the EPA's CO2 Endangerment Finding by Patrick J. Michaels and Kevin Dayaratna: https://cei.org/content/scientific-case-vacating-epas-carbon-dioxide-endangerment-finding

Planet of the Humans, the new movie from director Jeff Gibbs and executive producer Michael Moore, may be viewed for free at: https://www.youtube.com/watch?v=Zk11vI-7czE
My post on it, with more links: https://cei.org/blog/hurry-see-planet-humans-it%E2%80%99s-banned

The EPA has extended the deadline to 18th May for public comments on the scientific transparency supplemental rule.

Coalition letter on waiving the Renewable Fuels Standard released today: https://americansforprosperity.org/afp-leads-coalition-letter-urging-president-trump-to-waive-renewable-fuel-standard/

Ben Zycher on Earth Day: https://www.realclearmarkets.com/articles/2020/04/22/earth_day_2020_the_exhaustion_of_the_climate_left_489297.html

Steve Milloy on Earth Day: https://junkscience.com/2020/04/eco-reality-strikes-back-earth-day-at-50/

The Heartland Institute has launched two new web sites, Climate at a Glance and Climate Realism.

Marlo Lewis on EPA's proposed PM standards: https://cei.org/blog/epa-proposes-retain-current-standards-particulate-matter

Fred Singer, RIP

Our friend and ally Fred Singer died on 6th April. He was 95. Fred was a distinguished scientist and a wonderful man. He had a long and varied career before he became one of the early prominent scientists to speak out against global warming alarmism.

Fred was born in Vienna in 1924 and arrived as a teenager in America as a refugee from National Socialist Germany's Anschluss. He earned a degree in electrical engineering from Ohio State and then his AM and PhD (at the age of 24) in physics from Princeton, while also serving in the Navy doing mine research during the second world war.

In addition to appointments at several major universities--Virginia (1971-94), GMU, Miami, Maryland, Johns Hopkins--and publishing hundreds of scientific papers, Fred had several tours as a federal government scientist/adminstrator at Interior, EPA, and most notably as founding director of the National Weather Satellite Service (1962-64).

Fred was one of the first prominent scientists to speak out against the dubious science behind global warming alarmism. He founded the Science and Environmental Policy Project in 1990. Over the the next three decades, he spoke at conferences and universities all around the world. He wrote op-eds for major papers and several books for a general audience while continuing to publish scientific papers.

Fred also excelled as an organizer. At a meeting in 2003 in Milan, he proposed creating a Nongovernmental International Panel on Climate Change (NIPCC), which went on to produce an amazing series of Climate Change Reconsidered reports published by Joe Bast and the Heartland Institute.

Fred was a gentleman--unfailingly polite, always genial, and possessing true integrity. He usually brushed off the endless smears and defamation by the thugs in the global warming cabal with a shrug and a laugh. But not always. In the

early 1990s he sued one of Al Gore's creepy henchmen for libel and won. He recounts the episode at https://media.hoover.org/sites/default/files/documents/0817939326_283.pdf.

Fred had thousands of friends and admirers around the world, and I feel lucky to have been one of them. Tributes and remembrances have appeared at scores of web sites. I will mention only three. Ken Haapala, Fred's successor as president of SEPP, has collected a number of tributes at http://www.sepp.org/twtwfiles/2020/TWTW%204-11-20.pdf. The other two organizations he worked closely with were Heartland and CFACT. Their tributes are at https://www.heartland.org/news-opinion/news/s-fred-singer-in-memoriam-a-life-well-lived-in-pursuit-of-truth and at https://www.cfact.org/2020/04/07/fred-singer-a-giant-has-passed/.

Message

From: Myron Ebell [Myron.Ebell@cei.org]
Sent: 6/8/2020 1:59:03 PM
To: Myron Ebell [Myron.Ebell@cei.org]
Subject: Cooler Heads Coalition: next meeting Thursday, 11th June, 2 PM via Zoom

The Cooler Heads Coalition will hold its June strategy meeting beginning at 2 PM this Thursday, 11th June, via Zoom.
Please register here:

Ex. 6

If you would like to be on the agenda or have an agenda item, please e-mail or ring me at (202) 320-6685.
For those who register, I will send an agenda and list of speakers.

It looks like the opportunities for recreational looting are over (at least for now), so I hope Thursday at 2 PM will be a good time for most people.

I hope everyone is doing well during this strange time. On top of the Wuhan virus panic and economic collapse, the protests plus riots remind me of the last period of infantile leftism / apocalyptic fervor--the late 'sixties and early 'seventies. I missed a lot of it because I was still in school in the rural West, but I think it's best captured in a couple Walker Percy novels, particularly Love in the Ruins from 1971.

Here are a few links to items of interest:

Trump EOs:

https://cei.org/blog/trump-executive-order-expedite-project-approvals

https://cei.org/blog/trump-signs-executive-order-%C2%A0spur-economic-recovery-through-deregulation

EPA rules:

https://cei.org/blog/epa-proposes-rule-increase-consistency-and-transparency-benefit-cost-analysis

https://cei.org/blog/epa-finalizes-rule-limiting-state-abuses-clean-water-act-block-fossil-energy-projects

https://cei.org/blog/epa-receives-comments-proposed-revisions-transparency-rule

SAFE Rule:

https://thehill.com/policy/energy-environment/500174-18-states-fight-conservative-think-tank-effort-to-freeze-fuel

https://cei.org/blog/safe-rule-examined-part-5-statutory-issues

They Never Learn:

https://thehill.com/homenews/campaign/501248-vulnerable-republicans-embrace-green-issues-in-battle-to-save-seats

It's not just climate models that can destroy the economy:

Covid vs. Climate Modeling: Cloudy With a Chance of Politics

Sad news: COP-26 delayed:

https://cei.org/blog/cop-26-un-climate-conference-delayed%C2%A0until-november-2021

Cheery news:

https://judithcurry.com/2020/05/14/greening-the-planet-and-slouching-towards-paris/

Planet of the Humans is back up on YouTube!

Myron Ebell
Director, Center for Energy and Environment
Competitive Enterprise Institute
1310 L Street, N. W., Seventh Floor
Washington, DC 20005, USA
Tel direct: (202) 331-2256
Tel mobile: (202) 320-6685
E-mail: Myron.Ebell@cei.org
Stop continental drift!

Message

From: Smythe Anderson [AndersonS@api.org]
Sent: 6/10/2020 7:40:51 PM
To: Hyman, Alana [Hyman.Alana@epa.gov]
CC: Gunasekara, Mandy [gunasekara.Mandy@epa.gov]; Dickerson, Aaron [dickerson.aaron@epa.gov]
Subject: RE: API Meeting Request
Attachments: 2020-06-10 EPA Meeting Request Form - Administrator Wheeler.docx

Alana – Please see the attached form with additional information related to API's meeting request. Don't hesitate to let me know if I can provide any further detail.

Thanks in advance,
Smythe

From: Hyman, Alana <Hyman.Alana@epa.gov>
Sent: Monday, June 8, 2020 1:34 PM
To: Smythe Anderson <AndersonS@api.org>
Cc: Gunasekara, Mandy <gunasekara.Mandy@epa.gov>; Dickerson, Aaron <dickerson.aaron@epa.gov>
Subject: RE: API Meeting Request

Good afternoon Smythe,

Thank you for your request on behalf of the API's member companies. If you would please fill out the attached form and return to us at your earliest convenience? This form will assist in a lot for the logistical questions back and forth.

Thank you and we look forward to hearing from you soon.

Alana Hyman
Alana Hyman
Office of the Administrator
U.S. Environmental Protection Agency
Hyman.Alana@epa.gov

From: Smythe Anderson <AndersonS@api.org>
Sent: Tuesday, June 2, 2020 11:52 AM
To: Wheeler, Andrew <wheeler.andrew@epa.gov>; Hyman, Alana <Hyman.Alana@epa.gov>
Cc: Gunasekara, Mandy <gunasekara.Mandy@epa.gov>
Subject: API Meeting Request

Administrator Wheeler,

On behalf of API's member companies, I would like to schedule a call between you and API CEO Mike Sommers to discuss high-priority and timely EPA actions impacting the oil and gas industry.

Please let me know if I can provide additional information related to this request.

Thanks in advance for your consideration.

Smythe

Smythe Anderson
Director | Federal Relations
American Petroleum Institute | 200 Massachusetts Ave NW | Washington, DC 20001

O: 202.682.8040
M: 202.255.5075

AndersonS@api.org

www.api.org

ADMINISTRATOR ANDREW WHEELER
MEETING REQUEST FORM
U.S. Environmental Protection Agency

Today's Date:	*6/10/2020*
Proposed Meeting Date and Time:	*Week of June 15*
Requesting Individual / Affiliation:	*Smythe Anderson / API*
Location of meeting:	*EPA by default; if off-site, provide address, parking instructions, etc.*
Is the Above Date Flexible?	*We will work to accommodate the Administrator's schedule*
Purpose of the Meeting (Please note all specific topics to be discussed with Administrator)	*Cost benefit rule, methane, NAAQS, enforcement discretion memo, in-service tank inspections*
Does the topic of the meeting include any area under litigation? If so, name the litigation.	*NAAQS, methane, and the enforcement discretion memo*
Role of the Administrator:	*Meeting participant*
List all attendees and their affiliation:	*Mike Sommers, Bill Koetzle, Frank Macchiarola / API*
Requestor(s)' Relationship to EPA:	*Regulated industry*
Does the organizer/host personally know the Administrator? If so, what is the nature of the relationship and its length?	*Mike has professionally known the Administrator for approximately a decade due to previous position on Capitol Hill. They do not have a personal relationship.*
Has the organizer/host met previously with the Administrator? If so, which dates?	*The most recent meeting was in October 2018 when the Administration was serving in an Acting capacity.*
Point of Contact:	*Jennifer Bulcao, Executive Assistant,* [HYPERLINK "mailto:BulcaoJ@api.org"]

Please return this completed form to Alana Hyman at [HYPERLINK "mailto:hyman.alana@epa.gov"]

ED_014208_00000040-00001

Message

From: Maisano, Frank [frank.maisano@bracewell.com]
Sent: 6/29/2020 6:54:20 PM
To: Hewitt, James [hewitt.james@epa.gov]
CC: Gunasekara, Mandy [gunasekara.Mandy@epa.gov]
Subject: FW: Jun 29 Bracewell PRG Energy Update: Infrastructure Independence, Ethanol/RFS Fireworks in Run up to July 4th

James,

Frank Maisano here… Just reconnecting after chatting with Mandy. Always happy to help. Here is my weekly energy update. Let me know.

Frank
202-997-5932

FRANK MAISANO
Senior Principal
frank.maisano@policyres.com
T: +1.202.828.5864 | F: +1.800.404.3970

BRACEWELL LLP
2001 M Street NW, Suite 900 | Washington, D.C. | 20036-3310
policyres.com | profile | download v-card

CONFIDENTIALITY STATEMENT
This message is sent by a law firm and may contain information that is privileged or confidential. If you received this transmission in error, please notify the sender by reply e-mail and delete the message and any attachments.

From: Maisano, Frank
Sent: Monday, June 29, 2020 2:22 PM
To: Maisano, Frank <frank.maisano@bracewell.com>
Subject: Jun 29 Bracewell PRG Energy Update: Infrastructure Independence, Ethanol/RFS Fireworks in Run up to July 4th

Friends,

Welcome to the shorter July 4th week… I hope everybody takes a few days to enjoy what we have despite the craziness of 2020. And please be careful with any firework-related, self-celebrations as many of the regular public fireworks events have been cancelled. I always get nervous about that for long-standing reasons.

Before we go though, it seems we have a busy few days. The House is expected to vote this week on its $1.5 trillion infrastructure bill, H.R. 2. There is still a lot of work to do on amendments, but the Rules Committee meets today to launch the process and determine which amendments will be allowed/packaged.

Tomorrow, the House Climate Committee is slated to offer its report of recommendations for committees of jurisdiction to consider to address climate change. This was originally expected in March but like most things in the COVID time, it

slipped to now. The recommendations are expected to focus on expanding clean energy incentives, tightening climate regulations for federal agencies and adding more emphasis on next-generation energy technologies.

Then on Wednesday, Senate Environment and Public Works holds an infrastructure hearing on resilience. Prior to the hearing, the Committee is holding a business meeting to move though a bunch of nominations. One that was originally on the list but is now is not is EPA #2 Doug Benevento, who is collateral in the middle of an Iowa Senate fight between Joni Ernst and her opponent.

Some of this issue may be addressed on Thursday when we expect that EPA may release its RFS Renewable Volume Obligations, always controversial and this year, it is no different with elections just months away and the regular battle between ethanol/farmers and unions on full display.

Other events include a CRES event today at Noon with Senate Energy's Lucy Murfitt and Fed Permitting Council guru Alex Herrgott speaking and the Chamber's Dan Byers and BCSE's Ruth McCormick on the panel (If this comes out too late, please check out the replay). BCSE and the Alliance to Save Energy also hold an EEGlobal Forum tomorrow morning on energy efficiency and economic recovery while at Noon WCEE holds an event on post-COVID oil/natgas climate agenda with API's Lauren Coughlin and BP's Heidi Keller. Also tomorrow, the Open Air Collective hosts a webinar at 10:00 a.m. on encouraging the use of low-carbon concrete for public construction projects and in the afternoon, DOE's Dan Simmons is back on Facebook Live to discuss water and hydro issues.

Finally, special congrats to our friend, Vijay Shanker, a Justice Department Sr Litigation Counsel in the Criminal Division and Deputy Chief of the Appellate (as well as husband of our Bracewell PRG colleague Dee Martin), who was nominated late last week to serve as Associate Judge on the (local) DC Court of Appeals.

That's all for today, call with questions, stay safe & healthy.

Best,

Frank Maisano
(202) 828-5864
C. (202) 997-5932

FRANKLY SPOKEN

"We encourage you to use diplomatic channels to engage with the president of Mexico and your Cabinet-level counterparts in Mexico's agencies to urge the government of Mexico to uphold its USMCA commitments to treat U.S. investors and U.S. exporters fairly on the eve of USMCA entering into force."

> *Mike Sommers, president and CEO of the American Petroleum Institute (API), wrote in another letter to President Trump earlier in June.*

"American companies have invested billions of dollars in Mexico since 2013, primarily in storage, pipelines, and marketing infrastructure."

> *Chet Thompson, president of the American Fuel and Petrochemical Manufacturers (AFPM), wrote in a letter to President Trump this week*

ON THE PODCAST

Argus Podcast Looks at Gasoline, Diesel Market – Two for the price of one today on the Argus *Driving Discussions* series which provides an update on the US gasoline and diesel markets. On the latest podcast, Nick Watt, Argus Americas Freight Editor and Chunzi Xu, Deputy Editor, US Products, discuss the current US road fuels markets landscape, US gasoline exports and its effects on floating storage and freight markets. Last week's discussion took a closer look at how

OPEC's policies have shaped the road fuels supply/demand landscape. Argus' John Demopoulos and Chief Economist David Fyfe discussed how road fuel supply/demand has been impacted by OPEC's production cut policies since the initial outbreak of COVID-19 in February/March.

FUN OPINIONS

DOE Sect Highlight Plan on Critical Minerals – In an *opinion piece in Real Clear Energy*, Energy Secretary Dan Brouillette outlines the key path for America to win the critical minerals battle against China. He writes despite repeated nefarious actions that violate both American and international norms of behavior, American supply chains are reliant upon China for critical goods and materials important to U.S. national security. This is true of everything from automotive parts and electronics to pharmaceuticals and medical products. Brouillette outlines DOE's plan to combine innovation and a revived private sector to win the critical minerals battle against China. He says we will do it diversifying supply, developing substitutes and driving recycling of critical minerals and rare earth elements. As we celebrate America's 244th birthday this week, he adds "We must reclaim our independence over critical mineral and rare earth element supplies to secure a prosperous future."

FROG BLOG

Reuters Analyst: Production Still laying Low – Despite signs of demand pickup, Reuters analyst John Kemp writes in a column that US petroleum refiners are not rushing to boost crude processing, allowing the market to rebalance and drain the glut of fuel supplies that has emerged during the coronavirus outbreak. US refineries processed 19% less crude than the five-year average last week, up slightly from 25% below average at the bottom of the lockdown, Kemp said. The restraint is beginning to pay off, with gasoline and even distillate stocks starting to flatten or fall after rising sharply during lockdown. Provided refineries hold back, fuel stocks should drop significantly over the next couple months towards more normal levels.

IN THE NEWS

Refiners Raise Concerns about Mexico Trade Barriers – The re calling on President Donald Trump to help persuade Mexican President Andrés Manuel López Obrador not to ditch the energy reforms that his predecessor launched, opening Mexico's oil industry to private investment, including to U.S. energy companies. "American companies have invested billions of dollars in Mexico since 2013, primarily in storage, pipelines, and marketing infrastructure," Chet Thompson, president of the American Fuel and Petrochemical Manufacturers (AFPM), wrote in a letter to President Trump this week, as written by our friend James Osborne in the *Houston Chronicle*. U.S. firms have invested in Mexico's oil industry, and U.S. exports of crude oil and petroleum products have more than doubled over the past half-decade, EIA data shows. American oil firms are now turning to President Trump to help them keep doing business in Mexico and be treated fairly. I can send both letters if you haven't seen them.

House Adds GREEN Tax Bill to Infrastructure – With votes on infrastructure this week, House Democrats have added the Growing Renewable Energy and Efficiency Now (GREEN) Act, HR 7330, to the House of Representatives infrastructure package. BCSE's Lisa Jacobson said "with policy support, clean energy industries can recover the jobs they have lost and return to the previous decade-long trend of economic and job growth. As nearly 70% of pre-pandemic clean energy jobs were in small businesses, federal policy supporting the recovery of clean energy sectors would benefit communities across the country."

Sens Push Nuke Legislation to be in NDAA – On Thursday, a bipartisan group of 20 senators led by Senate Energy and Natural Resources Committee Chairman Lisa Murkowski (R-AK) and Senator Cory Booker (D-NJ) sent a letter to Senate Armed Services Committee Leadership, urging the inclusion of the Nuclear Energy Leadership Act (NELA) (S. 903) in the FY2021 National Defense Authorization Act (NDAA). ClearPath Action – along with 43 other organizations – sent a similar letter to the Senate Armed Services Committee requesting that NELA be in the NDAA. Rich Powell said "This amendment on nuclear energy would add several important national security-related provisions from NELA to the NDAA, including strengthening our foreign policy relationships and preventing an increase in nuclear weapons around the world. This is

also another great example of the bipartisan support on Capitol Hill for forging ahead with the next generation of clean and reliable nuclear technologies that China and Russia are trying to corner the global market on."

Chesapeake Declares Bankruptcy – The long expected bankruptcy of Chesapeake Energy was announced last night. The company said that it was a necessary decision given its debt. It said it will continue to operate as usual during the bankruptcy process.

Fed Picks Up Loans – The US Federal Reserve bought $428 million in bonds of individual companies through mid-June, making investments in household names like Walmart and AT&T as well as in major oil firms, tobacco giant Philip Morris and the utility owned by billionaire Warren Buffett's Berkshire Hathaway holding company. The Fed published data Sunday and showed utilities and energy companies comprised one-fifth of the central bank's individual bond purchases. Issuers in the energy industry accounted for about 8.45% of the bonds purchased, about a percentage point less than their representation in a broad market index that the Fed says its purchases are intended to track over time. It was the Fed's first foray into corporate bond purchases that spread broadly across the economy, touching firms like Gilead Sciences that are involved in developing treatments for the COVID-19 disease caused by the novel coronavirus, as well as major automakers.

ON THE SCHEDULE THIS WEEK

MOST EVENTS SCHEDULED ARE NOW ONLINE WEBINARS

Forum to Look at Clean Energy Economy – Citizens for Responsible Energy Solutions (CRES) hold a virtual forum today at Noon on policy options and opportunities for reigniting the clean energy economy. The event will feature a discussion of principled approaches to making fiscally responsible investments in clean energy infrastructure and reducing barriers to executing and completing clean energy projects. Lucy Murfitt, Chief Counsel for Energy and Natural Resources Committee, and Federal Permitting Council head Alex Herrgott will make opening remarks followed by a panel with our friends Dan Byers of the Chamber's Global Energy Institute, BSCE's Ruth McCormick and Lee Beck, CCUS Policy Innovation Director at the Clean Air Task Force.

House Rules – The House Rules Committee meets starting at 1:00 p.m. today to set the rules for consideration of the $1.5 trillion infrastructure bill, H.R. 2.

Forum to Look at Low Carbon Concrete – The Open Air Collective (https://openaircollective.cc), a distributed network of volunteers developing an open-source approach to direct air carbon capture (DACC) is hosting a webinar tomorrow at 10:00 a.m. on encouraging the use of low-carbon concrete for public construction projects. The event will focus on Hastings NY and how local governments can lead on reducing the climate impact of concrete, the world's most common building material.

Forum to Look at Energy Efficiency in Past Stimulus – Tomorrow at 10:00 a.m., EE Global Forum hosts an on-line event looking previous stimulus packages passed in 2009 to counter the effects of the economic slowdown. In this webinar, experts from both continents will reflect on the role of energy efficiency in these packages, the legacy of the stimuli on efficiency and our energy systems today, and lessons learned for governments and the private sector around the world as we plan for stimulus and recovery investments. Speakers include our friend Lisa Jacobson of the Business Council for Sustainable Energy as well as Stacey Paradis of the Midwest Energy Efficiency Alliance and National Association of Energy Service Companies head Tim Unruh.

Forum to Look at Africa, Resources – The Woodrow Wilson Center's Africa Program holds a webcast tomorrow at 10:00 a.m. on natural resources, sustainable development and peace in Africa. This event will examine the intersection of civil society and peacebuilding in natural resource-rich African countries. It will interrogate their roles in community engagement, the promotion of accountability, and development based on inclusive, transparent, and sustainable resource management.

Forum to Look at IEA Report – Tomorrow at 11:30 a.m., the Columbia Center on Global Energy Policy will host a forum with Dr. Fatih Birol, IEA's Executive Director, and Laura Cozzi, IEA's Chief Energy modeler, for a presentation of key findings from the World Energy Outlook Special Report on Sustainable Recovery. Following the presentation, they will take part in a discussion with Harvard's Joe Aldy, and Columbia's Noah Kaufman. The event will be moderated by Jason Bordoff.

WCEE to Look at Corporate Climate Risks – The Women's Council for Energy and the Environment (WCEE) holds a discussion tomorrow at Noon with experts on industry climate objectives to discuss how corporate climate commitments and plans for climate-related risk management will evolve (or not) as a result of the pandemic and its market and operational impacts. Speakers will include API's Lauren Coughlin and BP's Heidi Keller.

GTM Hosts Solar Discussion – Greentech Media hosts a webinar tomorrow at 1:00 p.m. where Wood Mackenzie research analysts will focus on global solar PV markets and supply chains in the time of coronavirus. Solar analysts forecast a tough couple of years ahead as we navigate the economic downturn, but the fundamentals still look very strong.

Senate Energy Looks at COVID, Territories – The Senate Energy Committee holds a hearing tomorrow at 2:30 p.m. on the impact of COVID-19 on US Territories. Congressional reps from Northern Mariana Islands, American Samoa, Virgin Islands, Puerto Rico and Guam will all testify.

Forum to Look at Net Metering, Grid – The R Street Institute will hold a web forum tomorrow at 3:00 p.m. on "net metering" programs that allow consumers who self-generate electricity to receive credit for any excess power they generate that goes back onto the grid. State jurisdiction over such matters has long been recognized. Recently, however, FERC have been asked to assert exclusive jurisdiction over consumer self-generated electricity sales, preempting state net metering programs and leaving millions of current customers in a maze of regulatory uncertainty. R Street has gathered a distinguished panel of experts to discuss this important topic and the implications of the issue for the broader electric market. Speakers include Arkansas PSC Chair Ted Thomas, Landon Stevens of the Conservative Energy Network and R Street's Chris Villarreal.

Forum to Look at COVID, Climate, Sustainability – Tomorrow at 3:00 p.m., Foreign Policy magazine and the Global Futures Laboratory at Arizona State University hold a Zoom forum to explore the surprising links between the coronavirus, climate change, and inclusive governance.

DOE's Simmons Back on Facebook Live – The Assistant Secretary for Energy Efficiency and Renewable Energy (EERE) at DOE Dan Simmons will hold another Facebook Live broadcast tomorrow at 3:30 p.m. Simmons will talk about how EERE is addressing water security, hydropower energy, ocean health, water resource recovery, and affordable access to clean water.

NRC to Continue Look at Facilities – The Nuclear Regulatory Commission holds another virtual meeting tomorrow at 5:30 p.m. to discuss the 2019 safety performance of 12 nuclear power plants in Region IV, the western United States.

WRI to Look at Climate, COVID Recovery – The World Resources Institute holds a forum on Wednesday at 9:00 a.m. focused on the COVID-19 and climate crises. During this event, speakers will showcase concrete opportunities for policymakers to use nationally determined contributions and long-term strategies to accelerate recovery from COVID-19 and protect people from the alarming consequences of climate change.

Senate EPW to Look at Infrastructure – The Senate Environment and Public Works Committee holds a hearing on Wednesday at 10:00 a.m. on improving infrastructure development opportunities to drive economic recovery and resiliency. Prior to the hearing at 9:45 a.m., it will hold a business meeting to move several nominations, but not EPA's Doug Benevento.

Energy Economists Hosts Venezuela Expert – On Wednesday at 1:00 p.m., the US Energy Economists hold a forum with Risa Grais-Targow, director of Eurasia Group, is going to explain recent developments for Venezuela's energy sector. Risa

is responsible for the firm's coverage of Venezuela, Ecuador, Central America, and the Caribbean. She has also worked for U.S. Department of Treasury, Alcoa Inc., the Albright Stonebridge Group, the Institute of International Finance and Dow Jones Newswires. She holds a master's degree in international economics and Latin American studies from Johns Hopkins' School of Advanced International Studies.

Forum to Look at Mexico Renewables – The Woodrow Wilson Center's Mexico Institute holds a webinar on Wednesday at 1:00 p.m. focused on the outlook for renewable energy in Mexico at a time of crisis. The event will feature a discussion of mid-term goals for the Mexican power market with perspectives from the two major renewable energy associations in Mexico – AMDEE (wind) and ASOLMEX (solar). Julio Valle, Joint Director of AMDEE and Spokesman for AMDEE and ASOLMEX, will outline the key elements that comprise the medium-term outlook for the electric sector in Mexico and clean energy. His presentation will focus on issues such as storage solutions, grid stability and resiliency, infrastructure, ancillary services, and an outlook on market efficiencies for solar and wind energy and the evolution over the coming years of the Mexican wholesale power market.

Forum to Look at AVs – The Atlantic Council Global Energy Center holds its next installment of EnergySource: Innovation Stream on Wednesday at 1:30 p.m. when they host Oliver Cameron, Co-founder and CEO of Voyage, who will discuss Voyage's development and deployment of autonomous vehicle technology. Cameron will discuss how Voyage is delivering self-driving technology to the market. So far, Voyage raised $52M from Khosla Ventures, Franklin Templeton, Jaguar Land-Rover, and Chevron. Cameron will speak to how the company is bringing autonomous transportation to those who need it most - beginning with retirement communities. He will discuss the safety, efficiency, and affordability of the technology and explain how the company partners with automakers to integrate self-driving technology into new, purpose-built vehicles.

WRI to Look at COVID, Climate – The World Resources Institute holds a webinar on Wednesday at 3:30 p.m. to looking at building better and how climate action accelerates COVID-19 recovery. This London Climate Action Week virtual event is co-hosted with the Embassy of the Netherlands in U.K., for a dialogue on how governments and international development institutions can tackle the dual challenges of climate change and COVID-19 recovery. Speakers include UK Department for International Development Vel Gnanendran, Netherlands Ministry of Foreign Affairs Director General Kitty van der Heijden, WRI Africa's Wanjira Mathai and UNEP's Joyce Msuya. Panelists will offer concrete examples of how countries can guide short-term stimulus spending with enhanced Nationally Determined Contributions and Long-term Strategies. They will highlight the ongoing relevance of climate action--especially for vulnerable countries in the current context of the pandemic and economic crisis.

Forum to Look at International Oil, Gas, Mining Corruption – On Wednesday at 4:00 p.m., Governance Studies at Brookings will host a webinar exploring solutions to the challenges of corruption along the natural resource value chain globally. Panelists will discuss key takeaways from a new Leveraging Transparency to Reduce Corruption (LTRC) project. "The TAP-Plus approach to anti-corruption in the natural resource value chain" which includes an analysis of the history, successes, and limitations of anti-corruption initiatives to date, and the introduction of a framework to guide future work. They will also discuss corruption risks in natural resource governance in the era of COVID-19 and the implications of the pandemic on global anti-corruption research initiatives such as LTRC.

USEA Cyber Forum Look at Cost Benefits of Digitization – The US Energy Assn will hold a webinar Thursday at 9:00 a.m. on utility digitization strategies and roadmaps for the power sector. The event is the second in the Digitalization and Cybersecurity in the Energy Sector series. The webinar will help utilities learn about global trends in digitalization including identification of digitalization priorities for power utilities, get an understanding of key technologies and the major cost benefits, and learn what digital utility leaders are doing and how you can apply their strategies to your business. BloombergNEF's Claire Curry is the speaker.

WRI Event to Look at Ocean Issues to Address Climate, COVID – On Thursday at 9:00 a.m., WRI holds an ocean forum on the case for the ocean as a dual solution to climate change and COVID recovery. A report commissioned by the High Level Panel for a Sustainable Ocean Economy (Ocean Panel) shows that ocean-based climate action can play a much bigger role in shrinking the world's carbon footprint than was previously thought. Participants in this event will include

the report's authors and experts, government members of the Ocean Panel and new private sector partnerships aimed at delivering on the potential of ocean-based climate action.

Forum to Look at Clean Trucking – The GreenBiz Group is hosting an on-line forum looking at clean trucks on Thursday at 1:00 p.m. This webcast will dive into trucking's role in our supply chain, how it has evolved since March, and how the industry will evolve into its green future. Our friend Katie Fehrenbacher moderates a panel with speakers Mike Roeth at the Rocky Mountain Institute, UPS's Patrick Browne, Shell's Greenlots CEO Andreas Lips and truck driver John Vesey.

July 4th – Saturday, with Federal holiday on Friday July 3rd.

IN THE FUTURE

House Approps Launches Funding Push – The House Appropriations Committee is planning to hold a marathon of subcommittee markups on fiscal 2021 spending bills beginning on July 6th, followed by full committee markups and consideration of subcommittee allocations on July 9th. Look for action on Interior-Environment and Energy-Water subpanels will hold their markups on July 7th with the full committee reporting both bills on July 10th.

ELI Forum to Look at Pandemic, Industry, Markets – Next Monday, July 6th at 1:00 p.m., the Environmental Law Institute holds a web seminar on the post pandemic energy sector. The panel will address how the pandemic has affected customers short term and long term and how it affect industry structure. They will also discuss the types of companies that have thrived and which have not. Speakers include APPA head Joy Ditto, PJM's Asim Haque and Ted Kury, of UFlorida's Public Utility Research Center (PURC).

WRI to Look at COVID, Resilience Recovery – The World Resources Institute is co-hosting on online web event at 8:00 a.m. with the United Kingdom Mission to the UN and World Resources Institute to showcase concrete opportunities for policymakers, the public sector and civil society to use climate action to support rapid and inclusive recovery from COVID-19. Featured speakers will include Zac Goldsmith, Minister for the Environment for the United Kingdom. Additional speaker information will be added shortly.

MIT to Look at Low Carbon Scale Up – On Tuesday July 7th, the Massachusetts Institute of Technology (MIT) Energy Initiative is hosting a webinar as part of its energy innovation series at 10:00 a.m. focused on scaling up low-carbon energy. The event will featured experts looking at the economics, geopolitical, and environmental impacts.

Forum to Look at Resilience, Recovery – Next Tuesday, July 7th at 10:00 a.m., the World Resources Institute is convening experts across sectors and geographies to provide insights about how to shift to a more sustainable and equitable model after COVID-19. In 2019, Leonardo Martinez-Diaz and Alice Hill co-authored Building a Resilient Tomorrow: How to Prepare for the Coming Climate Disruption. In 2020, the biggest economic and social disruption in generations struck, with COVID laying low the global economy and taking lives worldwide. In this webinar, Martinez-Diaz and Hill revisit their work in the context of this massive shock, discussing how COVID and climate change are alike and how they are different, outlining lessons for climate resilience from COVID, and laying the groundwork for how political and financial institutions can be better prepared the next time around.

USEA to Look at NatGas Fuel Opportunities – On Wednesday July 8th at 10:00 a.m., the US Energy Assn will host a webinar on natural gas as a flexible fuel and complement to renewable energy.

Forum to Look at Oil, Gas Assistance Polling – The Women's Council on Energy and the Environment (WCEE) will hold a lunch and learn on Wednesday July 8th at noon featuring the Brunswick Group who will describe US reactions to specific policy proposals being discussed in Washington; how those opinions split by party lines; and what actions Americans think companies should take to qualify for federal assistance. Our old friend Stephen Power and his colleague Mara Riemer will share the results of a recent survey examining Americans' attitudes towards federal aid for the oil and gas industry. Their survey polling indicates many Americans think the oil and gas sector has a positive economic impact, but also support requiring the industry to do more environmentally.

NREL, USEA Look at Cyber, Distributed Energy – The US Energy Assn holds a forum together with the National Renewable Energy Lab on Thursday, July 9th at 9:00 a.m. on cybersecurity for distributed energy resources (DERs) and identify best practices in cybersecurity governance, technical management of cyber-physical systems, and physical security. The webinar, presented by NREL, will also highlight new work planned through USAID to support developing countries in designing and implementing cyber security measures. NREL's Maurice Martin will speak.

ITIF to Look at Digitalization – The Information Technology and Innovation Foundation holds a forum on Thursday, July 9th at Noon on using digitalization to drive energy efficiency for a connected future.
Digital technologies have the potential to optimize the energy used for many energy-intensive activities—from manufacturing cement to cooling a building—while also enabling increased electrification of transportation and industrial processes. The discussion will feature industry leaders on the role of digitalization in driving energy efficiency gains across the economy, and the release of a new ITIF report assessing the concerns - some legitimate and most not - regarding the energy and environmental impacts of the tech sector. ACEEE's Ed Rightor and Johnson Controls' Clay Nesler are panelists.

VA Renewable Conference Set – The Virginia Renewable Energy Alliance will host the first LEAD Series Conference of 2020 in July 13th at Noon. This LEAD Series Conference will serve to provide policy updates and a 2020 General Assembly Debrief on noteworthy policy updates directly impacting development of Renewable Energy in Virginia. A second event will be held on August 13th.

Chamber to Discuss Preparing for Hurricane Season During Pandemic – The 9th Annual Building Resilience Through Private-Public Partnerships (PPP) Conference will be a webinar forum on July 14-16th. This year's virtual conference, hosted by the US Chamber of Commerce Foundation with support from the Department of Homeland Security (DHS), the Federal Emergency Management Agency (FEMA) and U.S. NORTHERN COMMAND, will focus on building resilience in the midst of a global pandemic while looking ahead to future emergencies and how we can be better prepared through greater collaboration across sectors. Extreme weather threatens communities and businesses across the U.S., adding further complexity to response and recovery efforts as emergency management agencies, first responders, and community leaders continue to deal with the impacts of COVID-19. The main focus will be how businesses can prepare for the hurricane season in the midst of a global pandemic.

FRANK MAISANO
Senior Principal
Ext. 5864
Policy Resolution Group

Message

From: Prosser, Justin [jprosser@nma.org]
Sent: 10/6/2020 3:48:55 PM
To: Gunasekara, Mandy [gunasekara.Mandy@epa.gov]
Subject: NMA Letter of Support for EO on Critical Mineral Supply Chains
Attachments: Executive Order Letter to Wheeler 10.05.20.pdf

Good Morning Mandy,
I hope you are doing well. I wanted to share a letter sent yesterday from NMA's President and CEO, Rich Nolan, to Administrator Wheeler expressing support for President Trump's Executive Order on critical mineral supply chains. As the EPA begins work to implement the EO, please use NMA and our members as a resource to assist in these efforts. Should you have any questions, do not hesitate to reach out.

Thank you,

Justin Prosser
Director, Congressional Affairs
National Mining Association
101 Constitution Ave. NW, Suite 500 East
Washington, D.C. 20001
Phone: (202) 463-2600
Direct: (202) 463-2621
jprosser@nma.org

RICH NOLAN
President & CEO

October 5, 2020

The Honorable Andrew Wheeler
Administrator
Environmental Protection Agency
1200 Pennsylvania Avenue, N.W.
Washington, D.C. 20460

RE: "Executive Order on Addressing the Threat to the Domestic Supply Chain from Reliance on Critical Minerals from Foreign Adversaries"

Dear Administrator Wheeler:

On behalf of the National Mining Association (NMA), I would like to express our support for President Trump's recent Executive Order on "Addressing the Threat to the Domestic Supply Chain from Reliance on Critical Minerals from Foreign Adversaries." The NMA and its members stand ready to assist your efforts to prepare reports, guidance, and recommendations to strengthen our nation's mineral supply chain for economic and national security applications.

The President's Executive Order correctly stated that "a stronger domestic mining and processing industry fosters a healthier and faster-growing economy for the United States." With $6.2 trillion worth of key domestic mineral resources, the U.S. leads the world in the breadth of its commodity mineral reserves and has a combined direct and indirect employment of 1.2 million jobs. As the front end of the supply chain for nearly all manufactured goods, the NMA and our mineral producers look forward to supplying the raw materials needed for America's economic recovery and future growth.

The new Executive Order addresses these long-standing issues and builds off the President's 2017 Executive Order, 13817, by refocusing our nation's priorities on a secure supply chain of critical minerals and rare earth elements vital to key sectors of the U.S. economic. Equally important, it goes beyond the existing list of 35 metals and minerals previously identified to take a more holistic approach to providing the of the very resources that domestic manufacturers need to rebuild our economy.

The demand for these resources will only continue to grow, and the U.S. must remain competitive to attract necessary investment. The World Bank Group recently published an update of its annual report finding that the production of minerals such as graphite, lithium and cobalt would need to increase 500 percent to meet the growing demand in

ED_014208_00000046-00001

new technologies. It is not a question of if minerals will be mined to meet every increasing demand. It is simply a question of where they will be mined.

With the Executive Order, the U.S. is taking credible action address the pitfalls, duplication and inefficiencies of our existing permitting system which currently takes between seven and 10 years – or longer – to permit a mine. Reducing these timeframes while maintaining environmental protections and ensuring access to public lands for responsible resource development will help ensure that the current trend of increased mineral import dependence from geopolitical adversaries does not continue.

As you work to implement this Executive Order, please use the NMA and its hardrock members as a resource to assist in our shared goals of a strong, secure, and reliable supply chain for critical minerals and rare earth elements. We stand ready to assist and thank you for your efforts. Should you have any questions, please contact Justin Prosser at jprosser@nma.org.

Sincerely,

Rich Nolan

Message

From: Eule, Stephen [SEule@USChamber.com]
Sent: 4/20/2020 10:51:32 PM
To: Gunasekara, Mandy [gunasekara.Mandy@epa.gov]
CC: Byers, Dan [DByers@USChamber.com]
Subject: GHG Data
Attachments: GHG Emission 2005-2017.xlsx

Mandy: Here are some data from the IEA and UNFCCC that might come in handy (both are credible sources). The first tab has IEA data with absolute reductions and % reductions since 2005 (with major countries highlighted in yellow). Scroll down and you will see two charts showing for the US, EU, China, India, Japan and Russia: absolute emissions from 2005 to 2017; and % change in emissions from a 2005 baseline (which is a bit better visually).

The other 3 tabs have the latest GHG (including and excluding LULUCF) and CO2 for Annex I countries if you are interested in these. They show that the EU and the USA have about the same overall reduction in GHGs since 2005, but the CO2 data show we are doing better than the EU (-860 vs. -790 MMTCOs). Let me know if you have any questions. Cheers. Steve

Stephen Eule
Vice President
Global Energy Institute
U.S. Chamber of Commerce
202 463 5654
seule@uschamber.com
http://www.globalenergyinstitute.org/

IEA CO2 Data (MMTCO2)

Region/Country/Economy	2005	2006	2007	2008
Canada	540.431495	531.138638	561.893801	541.874075
Chile	54.434634	55.677498	63.075016	66.533464
Mexico	412.385135	426.860195	433.36909	434.539402
United States	5703.220175	5602.449666	5686.716019	5512.512876
OECD Americas	6710.471439	6616.125997	6745.053926	6555.459817
Australia	365.515118	370.839121	381.067827	384.311003
Israel	58.796711	62.007447	64.268459	64.478539
Japan	1166.814399	1144.715317	1186.361509	1122.344144
Korea	457.672117	464.712085	477.413786	488.844473
New Zealand	33.690287	33.742482	32.602133	33.460866
OECD Asia Oceania	2082.488632	2076.016452	2141.713714	2093.439025
Austria	74.764026	72.355239	69.327062	68.802565
Belgium	107.676772	105.533637	101.500283	103.901054
Czech Republic	118.369879	118.850264	121.58171	116.364225
Denmark	48.494944	56.404306	51.639933	48.659925
Estonia	16.747695	15.469899	19.253197	17.683925
Finland	54.918043	66.45099	64.497212	56.043465
France	371.89291	362.610974	353.75169	349.495513
Germany	786.664297	799.102652	766.721505	775.186804
Greece	95.156324	94.103838	97.902891	94.35162
Hungary	54.722182	54.161519	52.522404	51.753214
Iceland	2.23538	2.272645	2.319835	2.121787
Ireland	44.420119	45.456782	44.642464	44.243869
Italy	456.431826	449.184459	441.461104	428.854473
Latvia	7.58061	8.030694	8.36029	7.938214
Lithuania	12.443951	12.502004	12.684005	12.610744
Luxembourg	11.493299	11.30179	10.704137	10.640149
Netherlands	167.48966	163.262344	164.115298	164.822973
Norway	34.500489	35.46211	36.037798	35.305649
Poland	296.261105	308.078167	306.294687	301.597403
Portugal	61.385798	56.444866	54.63161	52.832438
Slovak Republic	37.262253	36.484264	35.705258	35.423774
Slovenia	15.443058	15.799301	15.75268	16.7983
Spain	333.710098	325.036584	337.863422	309.774422
Sweden	49.105656	46.627675	44.987525	42.956349
Switzerland	44.006757	43.629113	41.660479	43.113007
Turkey	215.892986	240.254878	266.198341	262.367012
United Kingdom	531.648669	532.89988	521.733018	507.897104
OECD Europe	4050.718786	4077.770874	4043.849838	3961.539977
Albania	3.825184	3.792392	3.775922	3.708694

2009	2010	2011	2012	2013	2014	2015
514.415405	528.618581	541.160841	539.740483	549.640805	555.469386	557.660685
64.212781	68.604765	75.31667	77.235782	81.86194	75.468877	81.092176
425.193594	440.460336	456.460321	459.456276	449.626506	434.204441	442.41719
5120.690227	5352.120423	5128.17802	4903.010212	5038.523665	5046.56463	4928.610664
6124.512007	6389.804105	6201.115852	5979.442753	6119.652916	6111.707334	6009.780715
391.081821	383.618673	382.107665	381.713911	375.785446	367.025776	373.846773
63.854184	68.437949	67.512452	73.751873	64.879456	62.476909	63.927754
1070.343089	1127.152038	1183.493699	1225.860468	1234.04535	1194.051926	1155.666505
502.089454	550.915653	573.760776	575.466327	574.551419	562.67858	582.047107
30.460749	30.347958	29.588375	31.224908	30.964596	31.237609	31.258942
2057.829297	2160.472271	2236.462967	2288.017487	2280.226267	2217.4708	2206.747081
62.922944	68.571165	67.012232	63.894994	64.646984	61.116222	62.22117
96.871149	103.890892	92.80816	92.315416	93.571738	87.359109	92.789797
109.643459	112.460232	109.318664	105.653832	101.384367	98.267535	99.42453
46.925448	47.254487	42.056027	36.89122	38.633898	34.440574	31.948409
14.694047	18.563998	17.630306	16.363747	18.77879	17.387483	15.147858
53.795592	62.000673	54.562684	48.904772	49.729813	45.706777	42.365643
336.074448	340.21809	322.273392	325.318234	325.277258	293.184242	299.640583
720.205407	758.802602	731.224666	744.674177	763.769203	723.177099	729.684098
90.15818	83.36947	82.117228	76.986345	68.845177	65.726678	64.543218
46.866409	47.145132	46.343688	42.748798	40.246668	40.059463	42.708351
2.07988	1.949182	1.868728	1.859894	2.031822	2.047533	2.057458
39.679776	39.516725	35.381343	35.911606	34.597873	34.074808	35.342128
383.717096	391.99233	384.107414	366.677218	337.575729	319.155267	329.662257
7.185957	8.087541	7.340252	6.99556	6.909808	6.723727	6.845608
11.40734	12.314715	11.525294	11.531329	10.868843	10.462848	10.550273
10.08492	10.664187	10.514577	10.311125	9.781443	9.288168	8.804662
160.072111	170.762343	158.412075	157.155685	156.790967	149.502726	157.858417
35.683365	37.29115	36.219049	35.89114	35.75981	35.559619	35.890983
291.471973	307.493273	303.187965	296.94125	292.406679	279.258971	282.70842
53.076554	47.561335	47.054931	45.670308	43.741204	42.835055	46.930899
32.608964	34.572279	32.854943	31.251081	31.7854	29.171089	29.444719
15.109682	15.446955	15.427293	14.8584	14.211939	12.756345	12.805132
276.086065	262.054512	264.874087	260.511883	235.161648	232.063953	247.067141
40.725659	46.062647	42.353652	39.246247	37.567152	37.29509	37.112379
41.825778	43.257966	39.234013	40.665937	41.665708	37.868645	37.323113
261.278593	267.846219	287.198851	298.432784	285.18345	307.171546	318.973757
460.083887	476.626011	439.178828	461.442481	447.002723	408.662693	394.115172
3700.334683	3815.776111	3682.080342	3669.105463	3587.926094	3420.323265	3473.966175
3.76623	3.930295	4.141866	3.484832	3.646202	4.123018	3.824801

2016	2017	Change from 2005 to 2017	% Change from 2005 to 2017
548.095275	547.798641	7	1
85.24552	86.08714	32	58
446.175879	445.991937	34	8
4838.476243	4761.301727	(942)	(17)
5917.992917	5841.179445	(869)	(13)
381.878629	384.583857	19	5
63.082005	63.766189	5	8
1146.887524	1132.4354	(34)	(3)
589.212169	600.034367	142	31
30.434542	32.241597	(1)	(4)
2211.494869	2213.06141	131	6
62.048731	64.872394	(10)	(13)
91.932287	90.368188	(17)	(16)
101.157395	101.682752	(17)	(14)
33.486945	31.26357	(17)	(36)
15.460878	15.972029	(1)	(5)
45.127234	42.598175	(12)	(22)
301.695852	306.123541	(66)	(18)
734.487052	718.794085	(68)	(9)
63.076623	63.21331	(32)	(34)
43.777954	45.783636	(9)	(16)
2.064863	2.173307	(0)	(3)
36.863114	35.720302	(9)	(20)
325.657168	321.481224	(135)	(30)
6.799011	6.679644	(1)	(12)
10.750005	10.811096	(2)	(13)
8.501982	8.631187	(3)	(25)
158.034178	155.574278	(12)	(7)
35.281342	34.760858	0	1
293.21141	305.841991	10	3
46.42253	50.757815	(11)	(17)
30.159706	32.212012	(5)	(14)
13.585628	13.410666	(2)	(13)
237.400337	253.423277	(80)	(24)
37.989269	37.643785	(11)	(23)
37.851822	37.135572	(7)	(16)
338.874454	378.63109	163	75
372.557789	358.731281	(173)	(33)
3484.255559	3524.291065	(526)	(13)
3.674183	4.342011	1	14

Armenia	4.129845	4.151024	4.797638	5.27332
Azerbaijan	29.018489	29.39629	26.695627	28.81145
Belarus	55.01416	57.239326	55.727348	58.444191
Bosnia and Herzegovina	15.857733	17.462209	18.415091	20.240004
Bulgaria	46.473483	47.622547	50.958573	48.500374
Croatia	19.917214	19.977214	21.222283	20.164387
Cyprus	7.047944	7.113808	7.4253	7.579383
Georgia	4.065656	4.525622	5.453393	4.666914
Gibraltar	0.405663	0.424375	0.421157	0.430445
Kazakhstan	156.902433	172.937357	187.204832	230.259087
Kosovo	6.639156	6.701349	7.030455	7.570421
Kyrgyzstan	4.8919	4.877132	5.963378	7.006248
Malta	2.621893	2.646157	2.711098	2.718652
Republic of Moldova	7.810491	7.517954	7.436466	7.360146
Montenegro	2.004798	2.179294	2.098407	2.693314
Republic of North Macedonia	8.917292	8.912976	9.339666	9.12527
Romania	92.632653	95.285763	92.38187	91.070886
Russian Federation	1481.897136	1537.702664	1533.725251	1553.838333
Serbia	50.320015	52.464943	51.238268	49.905475
Tajikistan	2.347227	2.54852	3.114771	2.948035
Turkmenistan	48.103296	49.211939	55.833112	56.460956
Ukraine	290.620184	298.505426	305.977479	295.034556
Uzbekistan	105.599618	111.358294	110.030283	115.109052
Former Soviet Union (if no detail)	x	x	x	x
Former Yugoslavia (if no detail)	x	x	x	x
Non-OECD Europe and Eurasia	2447.063463	2544.554575	2568.977668	2628.919593
Algeria	77.47413	80.759469	84.879694	88.128544
Angola	6.146691	8.253096	9.650967	11.817271
Benin	2.677863	3.245668	3.786198	3.835942
Botswana	4.278592	4.086871	4.319812	4.392729
Cameroon	2.935781	3.10607	4.118061	4.269435
Congo	0.843574	1.022379	1.096506	1.37194
Côte d'Ivoire	5.813001	5.627601	5.548482	6.36128
Dem. Rep. of Congo	1.281832	1.393429	1.543003	1.715975
Egypt	145.027708	152.133593	163.567698	170.863898
Eritrea	0.578183	0.502015	0.492457	0.425577
Ethiopia	4.482124	4.776189	5.503395	6.228882
Gabon	1.733485	1.80216	1.938413	2.015109
Ghana	6.306508	7.725022	8.355755	7.732564
Kenya	7.483192	8.445388	8.382223	8.822446
Libya	43.101459	41.977812	38.963802	42.184335
Mauritius	2.961755	3.304216	3.395196	3.466776
Morocco	39.215868	40.525447	41.349844	43.178424
Mozambique	1.514919	1.623487	1.973156	1.952469
Namibia	2.492652	2.507824	2.580865	2.925312
Niger	0.736144	0.729631	0.80367	0.842418
Nigeria	56.558056	51.355652	47.716495	52.945289

4.269475	4.048253	4.672815	5.438573	5.243728	5.220168	4.70213
24.521671	23.532476	26.449925	28.894746	29.462078	30.793666	30.806159
55.318366	59.498259	56.382399	57.595686	57.549168	56.801809	52.618265
20.204495	20.482682	23.400889	21.645003	21.510392	19.172421	19.306465
42.373446	44.362486	49.165656	44.415409	39.159236	41.539009	43.715357
19.064566	18.248777	17.950446	16.419845	15.901102	15.117108	15.512642
7.502392	7.260554	7.000736	6.515882	5.630061	5.776906	5.900866
5.292218	4.995027	5.953731	6.609908	6.68514	7.719799	8.383116
0.471038	0.474195	0.45858	0.467989	0.499159	0.536595	0.589619
202.716188	221.101402	234.81722	233.846139	249.15968	229.816281	245.762673
8.397258	8.695947	8.605458	8.117446	8.296504	7.392382	8.605689
6.521635	6.040358	7.21138	9.563712	8.750947	9.032191	9.896806
2.504597	2.580576	2.567454	2.709905	2.372212	2.354011	1.6489
7.298791	7.946552	7.918591	7.698491	6.705483	7.249277	7.57852
1.747481	2.584208	2.535667	2.331593	2.267307	2.218423	2.358285
8.502029	8.319696	9.148742	8.792818	7.8537	7.436958	7.133668
77.431117	74.725473	80.859371	78.578501	69.312297	68.466683	69.55857
1440.681104	1529.228168	1604.742898	1607.949744	1568.533162	1551.605133	1534.458233
45.955643	45.61019	49.775918	44.570331	45.373816	38.045	44.459955
2.309775	2.302905	2.41822	2.892174	3.007117	4.021592	4.211795
49.95901	56.919769	61.795624	64.094198	65.504807	67.016622	69.10529
249.69807	266.580685	279.61803	274.008242	265.198093	234.310862	187.590314
103.375513	100.562513	110.038279	113.435604	103.300972	104.046358	92.161645
x	x	x	x	x	x	x
x	x	x	x	x	x	x
2389.882108	2520.031446	2657.629895	2650.076771	2590.922363	2519.812272	2469.889763
94.441442	95.535489	102.789651	112.186153	115.656875	123.204974	130.426655
13.871999	15.151684	16.144331	16.449741	19.289788	20.914026	21.53232
4.193752	4.573129	4.438047	4.21419	4.448582	4.783984	5.261645
4.09028	3.271367	3.883977	4.985881	5.415702	6.986347	7.068888
4.809731	5.050631	4.854705	4.936586	5.349179	5.992238	5.944767
1.569329	1.833183	2.09355	2.228669	2.537397	2.640089	3.164794
5.926919	6.245044	6.042079	7.885024	8.458143	8.952662	9.543523
1.737353	1.869246	2.34466	2.271174	3.476123	4.656709	2.734926
174.449011	176.436297	182.670815	189.085708	189.195077	193.349392	199.544529
0.447342	0.47957	0.514275	0.545868	0.564828	0.577468	0.590108
6.337487	5.898599	6.816323	7.178843	8.411696	10.325544	10.059891
2.07918	2.659638	2.984984	3.126927	3.283267	3.251162	3.252522
9.244045	10.419649	10.851969	12.815716	13.695318	13.26183	14.088758
10.429718	11.209779	11.321457	10.354965	12.060053	12.898044	14.721841
45.339114	48.181967	34.415101	44.366352	48.299016	47.983357	42.725711
3.423313	3.662144	3.639261	3.734865	3.827598	3.959233	3.967535
43.15489	46.396882	50.751728	52.237979	51.518825	53.520673	55.371267
2.21395	2.377492	2.824377	2.622461	2.955268	4.699199	6.221087
2.983469	3.078895	3.133855	3.253369	3.460988	3.619834	3.858399
1.068423	1.358855	1.3798	1.866202	1.779983	1.969994	1.953955
44.125618	55.417965	60.185024	61.639257	80.886076	88.915396	82.588782

4.833071	5.165593	1	25
31.409359	30.805851	2	6
53.062826	54.070453	(1)	(2)
22.019403	22.327978	6	41
40.548756	42.819932	(4)	(8)
15.858564	16.193172	(4)	(19)
6.2692	6.367874	(1)	(10)
8.809005	8.7203	5	114
0.645692	0.7039	0	74
254.927792	255.767646	99	63
9.080385	8.16855	2	23
9.298993	8.909263	4	82
1.354078	1.516276	(1)	(42)
7.710688	7.526673	(0)	(4)
2.112994	2.206233	0	10
6.947674	7.440699	(1)	(17)
67.962637	70.78876	(22)	(24)
1510.557598	1536.878825	55	4
45.474363	46.129569	(4)	(8)
5.428489	5.843657	3	149
68.972285	68.998881	21	43
197.626378	171.300035	(119)	(41)
81.343275	81.156397	(24)	(23)
x	x	#VALUE!	#VALUE!
x	x	#VALUE!	#VALUE!
2455.927688	2464.148528	17	1
127.640064	130.493653	53	68
21.458342	18.021394	12	193
6.602646	6.763074	4	153
6.979639	7.717409	3	80
6.103656	6.152919	3	110
2.97836	2.847335	2	238
9.586785	10.234205	4	76
1.979013	2.201742	1	72
204.112697	209.219059	64	44
0.599637	0.632105	0	9
11.843085	13.059815	9	191
3.357483	3.367911	2	94
12.967698	13.779635	7	118
16.266163	16.264973	9	117
41.056051	41.52835	(2)	(4)
4.042202	4.182138	1	41
55.299726	58.14986	19	48
8.445417	7.624932	6	403
3.983156	4.03715	2	62
1.951763	2.048704	1	178
84.738062	85.988513	29	52

Senegal	4.626203	4.437371	4.981105	5.218785
South Africa	372.313634	374.190071	391.520354	421.60686
South Sudan	..	..	..	..
Sudan	9.927598	12.357718	13.29582	14.416562
United Rep. of Tanzania	5.118673	5.453922	5.275357	5.397551
Togo	0.963204	0.887183	0.892707	1.096276
Tunisia	19.47277	20.164077	20.978275	21.057747
Zambia	2.120692	1.958412	1.331986	1.507764
Zimbabwe	10.272774	9.557691	9.616183	7.448904
Other Africa	26.730255	28.22356	28.592173	32.371195
Africa	865.18932	882.133024	916.449652	975.598259
Bangladesh	31.960244	35.202812	37.310312	40.881798
Brunei Darussalam	4.823126	7.216328	6.844039	7.223355
Cambodia	2.639032	2.944559	3.571214	3.650335
DPR of Korea	75.340154	76.534134	63.274758	70.381463
India	1073.700993	1147.671261	1260.854573	1338.923555
Indonesia	317.824312	339.302458	355.435167	349.106115
Malaysia	155.842735	161.80455	178.056273	190.309585
Mongolia	10.984928	12.330981	12.909351	12.851063
Myanmar	10.477314	9.714564	10.116776	7.608118
Nepal	3.074201	2.500867	2.57814	2.882196
Pakistan	114.969678	124.417223	136.348318	130.404249
Philippines	71.501652	65.547401	69.021642	71.179449
Singapore	36.901353	37.171597	38.286019	38.426592
Sri Lanka	13.39291	11.780162	12.937259	12.123205
Chinese Taipei	253.971752	261.496385	265.401242	254.31363
Thailand	200.203804	201.675955	209.446113	215.179331
Viet Nam	79.230185	81.577544	90.003941	101.243758
Other Asia	15.580221	15.966218	15.493812	17.260303
Asia (excl. China)	2472.418594	2594.854999	2767.888949	2863.9481
People's Rep. of China	5407.51803	5961.808473	6473.211479	6669.111668
Hong Kong, China	41.332022	42.320555	44.032254	42.858175
China (incl. Hong Kong, China)	5448.850052	6004.129028	6517.243733	6711.969843
Argentina	149.47604	158.756607	165.612783	176.704997
Bolivia	8.975809	9.785122	10.713718	11.669457
Brazil	311.623799	315.152972	330.759555	349.288692
Colombia	53.5853	53.658699	54.768847	55.630794
Costa Rica	5.463059	6.000466	6.700225	6.706057
Cuba	25.051431	25.442477	26.31291	25.468898
Curaçao	5.977663	5.883453	6.392661	6.327339
Dominican Republic	17.522139	18.786072	18.937533	18.866365
Ecuador	23.926725	25.42396	26.681382	26.658121
El Salvador	6.252815	6.523559	6.92343	6.143442
Guatemala	10.621597	10.630962	11.475939	10.252402
Haiti	1.980992	2.025273	2.3168	2.3168
Honduras	7.192737	6.430913	8.150109	7.919782
Jamaica	10.281648	11.745439	11.752897	9.539431

5.374331	5.460983	5.787961	5.669916	6.003101	6.685095	7.516857
398.622983	418.800964	403.433982	420.993287	430.755113	442.494723	418.258797
..	..	..	1.437697	1.47545	1.554697	2.001328
14.7375	15.122702	14.206025	13.86677	13.112352	13.983064	16.354488
5.181092	6.216798	7.338101	8.88039	9.893453	9.631775	10.472963
2.275963	2.076229	1.887314	1.624766	1.716469	1.811379	1.906291
21.139471	23.293569	22.244906	23.474414	23.645011	25.036033	25.614897
1.572984	1.636973	1.983143	2.718055	2.852717	3.189165	3.475653
7.480856	9.464714	11.141014	11.519006	11.817134	11.552864	11.822362
32.585069	34.728455	30.886967	32.186327	32.905807	33.175111	34.639614
964.906614	1017.908892	1012.989382	1070.356558	1118.746389	1165.576061	1156.685153
44.050973	49.899502	53.297254	57.318837	59.835786	63.046901	70.895346
7.433705	6.861946	7.013411	6.969681	6.853818	6.69714	5.977692
4.369845	4.62182	4.845225	5.05419	5.171265	6.098246	8.011977
52.918936	49.292798	34.658929	36.052416	25.106143	28.676326	22.545503
1502.255543	1583.431201	1667.764769	1803.763778	1854.784915	2018.244235	2026.704698
360.626745	357.646151	390.317956	415.213004	417.982361	456.887111	459.139082
169.809685	189.860901	191.49175	192.982776	209.077335	220.552885	220.437513
13.538675	14.139533	15.572443	16.984529	18.287737	17.939589	17.118652
7.213886	7.906445	8.102464	11.447014	13.168292	16.537996	18.671324
3.427183	4.121846	4.404946	4.971779	4.944811	5.94916	5.694237
133.727865	129.168625	130.670045	132.270774	133.081933	141.296463	150.688547
71.467864	77.128398	77.755475	80.408283	89.649782	95.71423	103.891197
38.831762	42.413616	44.763911	43.692284	43.917804	44.459324	45.49601
11.566172	12.40876	14.673145	16.06775	13.740667	16.880141	19.489878
242.108301	256.357747	255.458233	247.433756	248.654017	250.611384	250.739426
207.212103	223.418643	221.780469	238.971877	247.458873	244.069637	248.039678
111.993506	126.659264	125.997063	125.185992	130.490981	144.37974	182.588799
19.1974	22.131547	29.573142	28.010862	27.759663	28.934142	38.446083
3001.750149	3157.468743	3278.14063	3462.799582	3549.966183	3806.97465	3894.575642
7131.511865	7832.716615	8570.926184	8819.604803	9190.501197	9127.211491	9101.375985
46.247113	41.997165	45.648905	45.099344	46.051431	47.913659	43.91731
7177.758978	7874.71378	8616.575089	8864.704147	9236.552628	9175.12515	9145.293295
168.915982	173.768538	181.236086	185.782647	181.004269	184.764378	190.384899
12.324391	13.637623	14.853897	16.646845	16.81135	18.204941	18.099998
325.497578	372.003618	391.086606	424.086627	453.474508	477.793116	453.633529
59.043569	60.224103	65.410075	65.23079	75.092369	77.827713	77.609792
6.388951	6.622054	6.910338	6.927642	7.236279	7.275832	6.94023
26.296927	29.508746	27.812486	28.089417	26.648096	26.207599	26.84168
5.930754	4.378255	5.496684	4.461795	4.304512	4.623429	4.691214
18.105931	19.021523	19.309773	20.035774	19.589982	19.456968	21.519849
29.358456	32.749762	32.855193	34.088693	35.754795	38.543228	37.357272
6.035602	5.826204	6.013437	6.013939	5.727543	5.852064	6.389271
11.231544	10.272703	10.567827	10.962022	11.834616	12.705648	15.164376
2.23913	2.095144	2.140475	2.081918	2.165803	2.762665	3.208933
7.557156	7.535444	8.245027	8.563247	8.779541	8.48056	9.558552
7.393225	6.93089	7.207868	6.88073	7.322934	7.129118	6.992686

8.159977	8.311532	4	80
418.658117	421.682392	49	13
1.765239	1.549031	#VALUE!	#VALUE!
18.92266	18.777895	9	89
9.676776	10.13179	5	98
1.997993	2.082434	1	116
25.212344	26.156972	7	34
3.731899	6.007872	4	183
10.3689	9.714938	(1)	(5)
35.063324	36.327491	10	36
1165.548874	1185.057223	320	37
72.943639	78.27017	46	145
6.411543	6.710178	2	39
9.287497	10.762923	8	308
25.426726	19.579698	(56)	(74)
2057.682254	2161.567072	1,088	101
454.267119	496.406275	179	56
216.236083	211.046967	55	35
17.981117	19.276	8	75
20.899074	30.404919	20	190
8.503721	10.113953	7	229
164.184363	183.447068	68	60
114.751784	126.487694	55	77
46.065234	47.407144	11	28
20.898562	23.103271	10	73
257.82498	268.877108	15	6
244.124879	244.254785	44	22
193.611788	191.243601	112	141
45.678803	50.203967	35	222
3976.779166	4179.162793	1,707	69
9064.428642	9257.9339	3,850	71
44.728626	44.034675	3	7
9109.157268	9301.968575	3,853	71
190.51204	183.375203	34	23
20.126218	21.89918	13	144
418.523728	427.632717	116	37
87.720859	75.291911	22	41
7.488019	7.584411	2	39
27.791025	26.215665	1	5
4.150776	3.748132	(2)	(37)
22.534306	21.43038	4	22
35.393138	34.299317	10	43
6.372143	5.735668	(1)	(8)
16.261135	15.703161	5	48
3.250079	3.293125	1	66
9.132171	9.42674	2	31
7.524926	6.971666	(3)	(32)

Nicaragua	4.032083	4.245508	4.363378	4.190988
Panama	6.776118	7.159286	7.056916	6.550758
Paraguay	3.472665	3.604743	3.736907	3.951832
Peru	28.632888	28.03185	30.924403	35.209581
Suriname	1.652793	1.494424	1.375903	1.420054
Trinidad and Tobago	17.175823	19.152553	21.352888	21.170093
Uruguay	5.151871	6.082907	5.571623	7.46823
Venezuela	137.701548	133.589038	129.850593	159.40226
Other Non-OECD Americas	14.719585	14.688888	15.5708	15.547434
Non-OECD Americas	857.247128	874.295171	907.3022	968.403807
Bahrain	20.564912	22.35459	22.866845	24.615976
Islamic Rep. of Iran	417.780642	449.259945	480.064819	487.344413
Iraq	73.175677	68.981641	62.715441	72.787954
Jordan	17.922443	18.310115	19.215726	18.505856
Kuwait	64.750023	67.309013	67.504013	71.594639
Lebanon	14.523599	13.725843	12.012641	15.848255
Oman	25.181794	33.669938	37.090219	36.118058
Qatar	33.211677	38.463634	43.99655	46.921888
Saudi Arabia	298.036626	316.647414	333.178922	364.251378
Syrian Arab Republic	53.466192	56.694149	59.993537	61.87622
United Arab Emirates	111.145283	115.048814	124.186843	146.520432
Yemen	18.836222	18.893315	20.003286	21.254518
Middle East	1148.59509	1219.358411	1282.828842	1367.639587
IEA/Accession/Association	20506.48094	21086.79947	21928.09531	21931.31247
European Union - 28	3922.776361	3928.797617	3872.332509	3788.666204
G7	9557.103771	9422.101586	9518.638646	9238.164989
G8	11039.00091	10959.80425	11052.3639	10792.00332
G20	22238.43038	22903.31999	23753.68322	23801.14896
Africa	865.18932	882.133024	916.449652	975.598259
Americas	7567.718567	7490.421168	7652.356126	7523.863624
Asia	11320.54324	12105.5051	12959.08671	13330.11647
Europe	5919.782855	5995.950585	5940.110831	5869.978113
Oceania	409.808526	415.228656	423.305201	427.361541

	2005	**2006**	**2007**	**2008**
China	5448.850052	6004.129028	6517.243733	6711.969843
United States	5703.220175	5602.449666	5686.716019	5512.512876
European Union	3922.776361	3928.797617	3872.332509	3788.666204

4.166694	4.27715	4.468531	4.436338	4.227338	4.516523	5.054947
8.034771	8.878513	9.527086	9.783195	9.899352	10.636012	10.102101
4.100728	4.791954	5.016166	5.189054	5.082017	5.334488	5.849183
37.747353	41.544007	44.92097	44.070715	45.182415	48.111009	49.724806
1.418218	1.695676	1.787672	2.002733	1.965031	1.992602	2.063356
19.832649	21.849145	21.79456	21.623042	22.248269	23.063719	21.280034
7.452967	5.959638	7.223777	8.187316	7.114949	6.267575	6.374932
160.509339	171.468892	145.718946	164.035587	152.193276	151.608047	140.538724
15.970803	16.655304	11.965219	14.814208	15.791347	15.280428	14.928571
945.552718	1021.694886	1031.568699	1093.994274	1119.450591	1158.437662	1134.308935
24.478322	25.551566	25.5737	26.100963	28.292683	29.695139	30.072802
504.28744	498.60787	507.801752	512.345211	535.980432	556.684117	553.300897
92.306772	103.576749	110.423394	126.55095	135.718179	140.885462	130.762392
19.284146	18.801144	19.815357	22.670995	22.343731	24.000633	23.785053
78.438724	77.004456	78.273888	77.43431	86.090085	82.22322	91.638915
19.360746	18.2933	18.597083	21.08113	20.705495	22.538012	24.61915
38.513827	42.36774	48.765169	54.341128	56.491107	59.642819	63.636288
48.040842	55.503424	62.494971	69.561812	71.288579	76.627172	77.645489
379.467718	419.163541	434.637466	463.416498	471.131152	506.685656	531.554326
57.02075	57.270529	53.7153	43.737771	28.735328	25.441199	23.872123
148.543136	154.590032	158.154333	168.504575	176.752109	176.420079	186.575572
23.468288	22.388934	19.804942	18.118959	24.648492	24.150257	11.662059
1433.210711	1493.119285	1538.057355	1603.864302	1658.177372	1724.993765	1749.125066
21790.75241	23136.64384	23756.81075	24046.13229	24579.29701	24519.71435	24402.32679
3508.343185	3612.60946	3475.103364	3440.89525	3355.660212	3170.929639	3216.057199
8605.529559	8975.530075	8729.61686	8566.723273	8695.834733	8540.265243	8395.039964
10046.21066	10504.75824	10334.35976	10174.67302	10264.3679	10091.87038	9929.498197
23547.262	24992.09734	25717.25839	26010.48544	26477.23496	26451.69543	26334.70674
964.906614	1017.908892	1012.989382	1070.356558	1118.746389	1165.576061	1156.685153
7070.064725	7411.498991	7232.684551	7073.437027	7239.103507	7270.144996	7144.08965
13907.94755	14956.40637	15993.5778	16565.51401	17068.35214	17284.16294	17364.76751
5422.470321	5641.198081	5592.153456	5549.458514	5416.920477	5169.520408	5153.951701
430.348052	423.977184	423.215017	423.59523	418.498295	411.016553	420.877817

2009	2010	2011	2012	2013	2014	2015
7177.758978	7874.71378	8616.575089	8864.704147	9236.552628	9175.12515	9145.293295
5120.690227	5352.120423	5128.17802	4903.010212	5038.523665	5046.56463	4928.610664
3508.343185	3612.60946	3475.103364	3440.89525	3355.660212	3170.929639	3216.057199

5.112604	5.106281	1	27
10.191378	9.612198	3	42
6.803062	7.654689	4	120
52.186698	49.693643	21	74
1.90988	1.928134	0	17
17.457045	18.007573	1	5
6.325631	5.872957	1	14
127.366139	113.717543	(24)	(17)
15.486952	9.816308	(5)	(33)
1099.619952	1064.016602	207	24
29.638922	29.813834	9	45
554.410488	567.123294	149	36
140.33713	139.877659	67	91
23.834961	25.55014	8	43
93.178766	89.420615	25	38
25.46051	26.931044	12	85
63.137552	65.49856	40	160
79.084102	80.116551	47	141
526.887374	532.181611	234	79
23.086043	23.031045	(30)	(57)
192.070738	196.510174	85	77
9.389446	8.919998	(10)	(53)
1760.516032	1784.974525	636	55
24276.51153	24596.72516	4,090	20
3202.176313	3209.276252	(714)	(18)
8267.856903	8146.665899	(1,410)	(15)
9778.414501	9683.544724	(1,355)	(12)
26178.02198	26521.74594	4,283	19
1165.548874	1185.057223	320	37
7017.612869	6905.196047	(663)	(9)
17439.49705	17896.07701	6,576	58
5130.017324	5138.073041	(782)	(13)
428.616204	433.456848	24	6

2016	2017	Change from 2005 to 2017	% Change from 2005 to 2017
9109.157268	9301.968575	3,853	71
4838.476243	4761.301727	(942)	(17)
3202.176313	3209.276252	(714)	(18)

India	1073.700993	1147.671261	1260.854573	1338.923555
Russian Federation	1481.897136	1537.702664	1533.725251	1553.838333
Japan	1166.814399	1144.715317	1186.361509	1122.344144
Germany	786.664297	799.102652	766.721505	775.186804
Canada	540.431495	531.138638	561.893801	541.874075
Indonesia	317.824312	339.302458	355.435167	349.106115
Brazil	311.623799	315.152972	330.759555	349.288692
South Africa	372.313634	374.190071	391.520354	421.60686
Australia	365.515118	370.839121	381.067827	384.311003
Turkey	215.892986	240.254878	266.198341	262.367012
United Kingdom	531.648669	532.89988	521.733018	507.897104
Italy	456.431826	449.184459	441.461104	428.854473
France	371.89291	362.610974	353.75169	349.495513
Chile	54.434634	55.677498	63.075016	66.533464

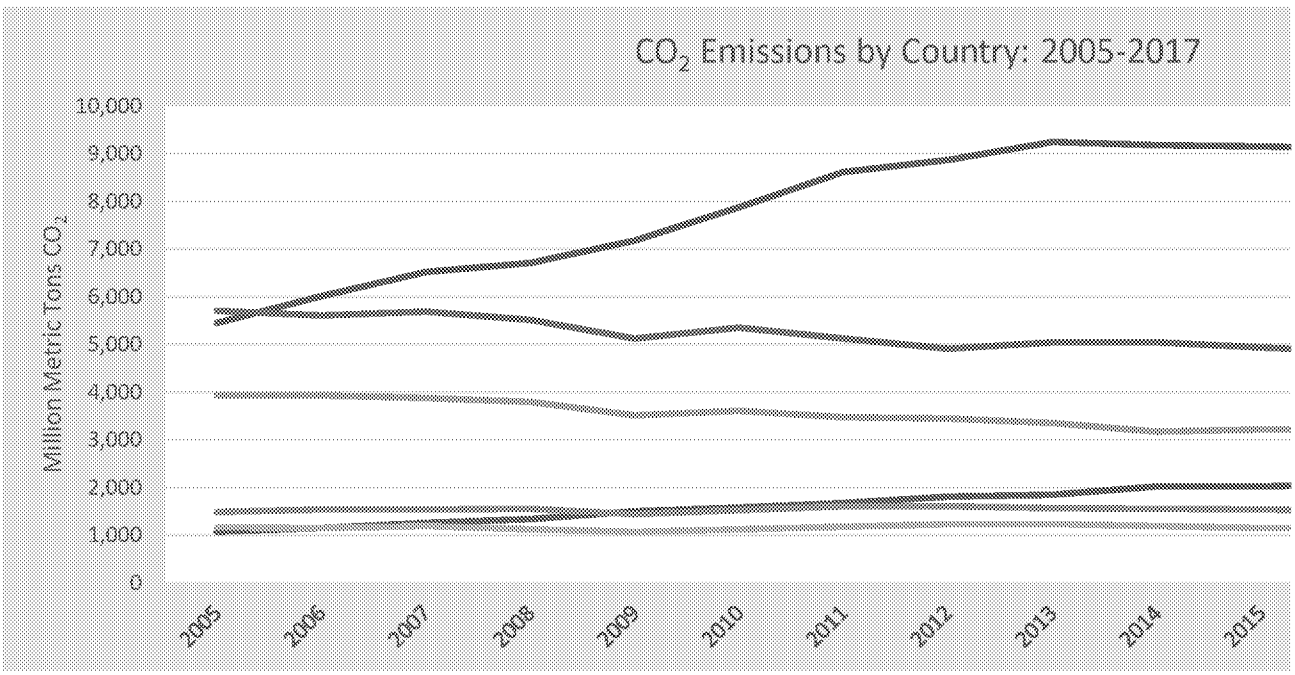

	2005	2006	2007	2008
China	0	10	20	23
United States	0	(2)	(0)	(3)
European Union	0	0	(1)	(3)
India	0	7	17	25
Russian Federation	0	4	3	5
Japan	0	(2)	2	(4)
Germany	0	2	(3)	(1)
Canada	0	(2)	4	0
Indonesia	0	7	12	10

1502.255543	1583.431201	1667.764769	1803.763778	1854.784915	2018.244235	2026.704698
1440.681104	1529.228168	1604.742898	1607.949744	1568.533162	1551.605133	1534.458233
1070.343089	1127.152038	1183.493699	1225.860468	1234.04535	1194.051926	1155.666505
720.205407	758.802602	731.224666	744.674177	763.769203	723.177099	729.684098
514.415405	528.618581	541.160841	539.740483	549.640805	555.469386	557.660685
360.626745	357.646151	390.317956	415.213004	417.982361	456.887111	459.139082
325.497578	372.003618	391.086606	424.086627	453.474508	477.793116	453.633529
398.622983	418.800964	403.433982	420.993287	430.755113	442.494723	418.258797
391.081821	383.618673	382.107665	381.713911	375.785446	367.025776	373.846773
261.278593	267.846219	287.198851	298.432784	285.18345	307.171546	318.973757
460.083887	476.626011	439.178828	461.442481	447.002723	408.662693	394.115172
383.717096	391.99233	384.107414	366.677218	337.575729	319.155267	329.662257
336.074448	340.21809	322.273392	325.318234	325.277258	293.184242	299.640583
64.212781	68.604765	75.31667	77.235782	81.86194	75.468877	81.092176

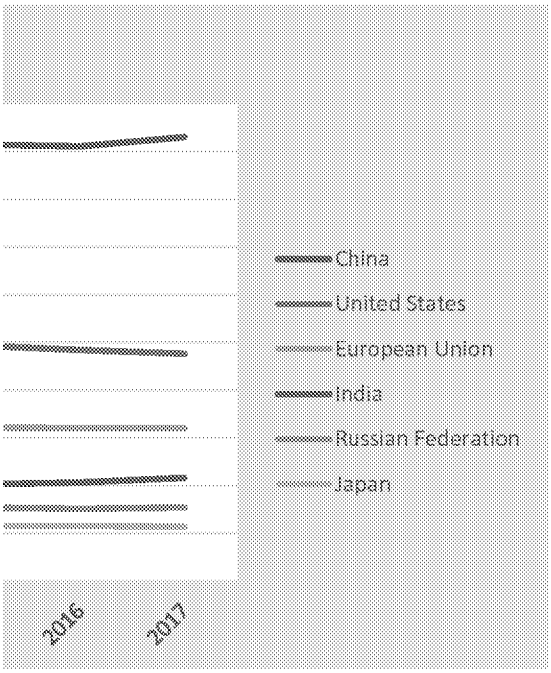

2009	2010	2011	2012	2013	2014	2015
32	45	58	63	70	68	68
(10)	(6)	(10)	(14)	(12)	(12)	(14)
(11)	(8)	(11)	(12)	(14)	(19)	(18)
40	47	55	68	73	88	89
(3)	3	8	9	6	5	4
(8)	(3)	1	5	6	2	(1)
(8)	(4)	(7)	(5)	(3)	(8)	(7)
(5)	(2)	0	(0)	2	3	3
13	13	23	31	32	44	44

2057.682254	2161.567072	1,088	101
1510.557598	1536.878825	55	4
1146.887524	1132.4354	(34)	(3)
734.487052	718.794085	(68)	(9)
548.095275	547.798641	7	1
454.267119	496.406275	179	56
418.523728	427.632717	116	37
418.658117	421.682392	49	13
381.878629	384.583857	19	5
338.874454	378.63109	163	75
372.557789	358.731281	(173)	(33)
325.657168	321.481224	(135)	(30)
301.695852	306.123541	(66)	(18)
85.24552	86.08714	32	58

2016	2017
67	71
(15)	(17)
(18)	(18)
92	101
2	4
(2)	(3)
(7)	(9)
1	1
43	56

Brazil	0	1	6	12
South Africa	0	1	5	13
Australia	0	1	4	5
Turkey	0	11	23	22
United Kingdom	0	0	(2)	(4)
Italy	0	(2)	(3)	(6)
France	0	(2)	(5)	(6)

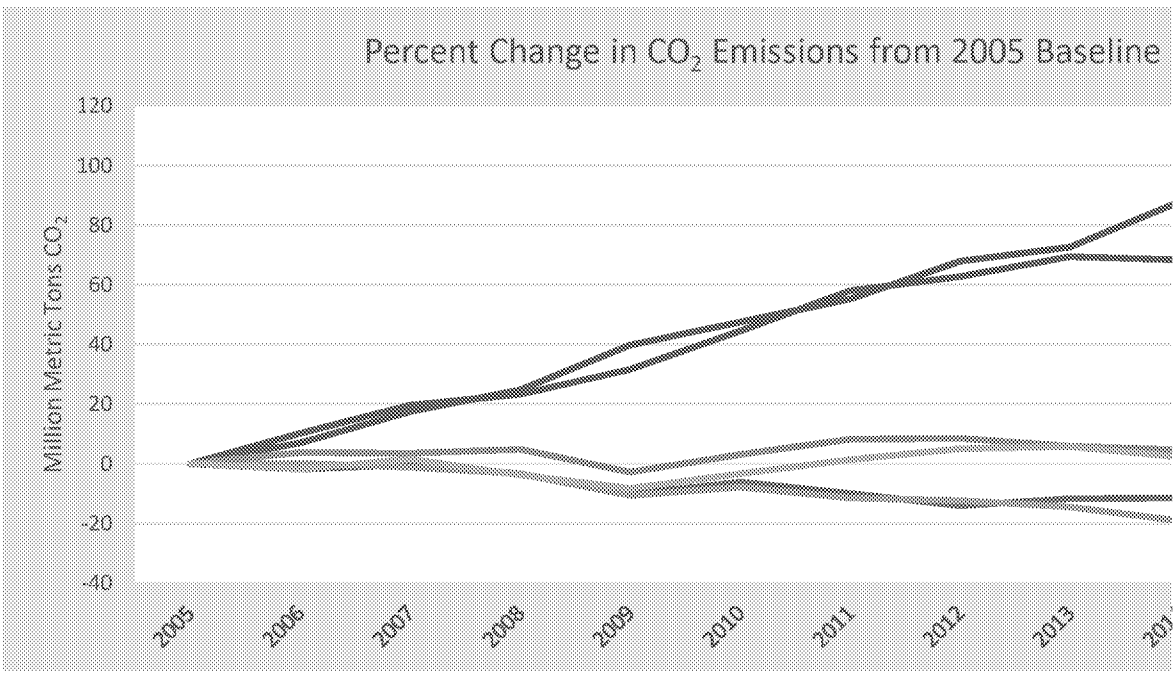

4	19	25	36	46	53	46
7	12	8	13	16	19	12
7	5	5	4	3	0	2
21	24	33	38	32	42	48
(13)	(10)	(17)	(13)	(16)	(23)	(26)
(16)	(14)	(16)	(20)	(26)	(30)	(28)
(10)	(9)	(13)	(13)	(13)	(21)	(19)

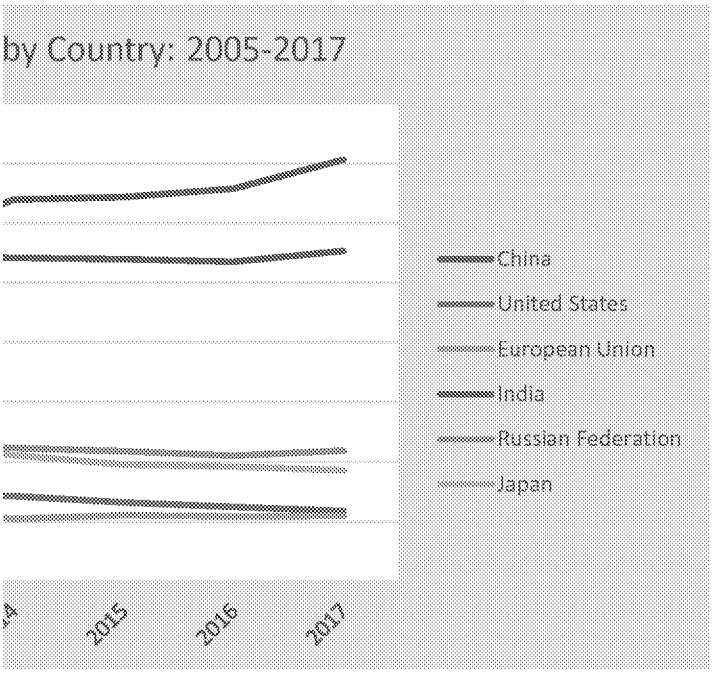

34	37
12	13
4	5
57	75
(30)	(33)
(29)	(30)
(19)	(18)

https://di.unfccc.int/time_series

Time Series - GHG total with LULUCF, in kt CO_2 equivalent

Party
Australia
Austria
Belarus
Belgium
Bulgaria
Canada
Croatia
Cyprus
Czechia
Denmark
Estonia
European Union (Convention)
European Union (KP)
Finland
France
Germany
Greece
Hungary
Iceland
Ireland
Italy
Japan
Kazakhstan
Latvia
Liechtenstein
Lithuania
Luxembourg
Malta
Monaco
Netherlands
New Zealand
Norway
Poland
Portugal
Romania
Russian Federation
Slovakia
Slovenia
Spain

1990	1991	1992	1993	1994	1995	1996	1997	1998
604,904	582,970	521,964	503,922	495,049	482,594	489,597	500,512	502,547
66,682	65,659	64,088	63,975	64,377	66,441	72,316	63,330	64,495
118,169	106,460	98,577	89,269	63,864	54,771	57,671	63,211	61,057
143,273	146,483	146,266	145,229	150,119	152,035	155,725	147,423	152,051
89,632	71,723	66,345	66,165	62,645	64,109	61,929	58,982	55,126
533,943	518,597	543,730	552,237	571,739	601,824	614,645	627,937	628,349
25,204	17,172	15,137	15,031	13,831	13,874	14,841	16,590	17,220
5,418	5,936	6,363	6,629	6,899	6,822	7,162	7,282	7,685
192,167	170,758	163,420	156,153	150,990	149,722	152,595	148,644	142,397
75,454	85,609	80,565	81,535	84,874	81,951	94,533	85,513	81,517
38,942	35,915	26,430	19,474	20,691	18,563	19,194	18,557	16,261
5,404,553	5,286,353	5,141,193	5,044,788	5,008,943	5,038,310	5,112,425	5,026,569	4,971,127
5,420,331	5,301,926	5,156,731	5,060,412	5,024,484	5,054,035	5,128,327	5,042,783	4,987,711
56,361	41,719	46,385	48,505	60,799	57,740	56,318	58,973	57,029
529,213	556,758	547,448	522,989	519,052	525,203	536,168	528,553	540,447
1,219,681	1,175,120	1,124,424	1,115,576	1,093,289	1,089,980	1,107,953	1,071,838	1,046,193
100,993	100,867	102,034	101,164	104,218	106,284	110,007	115,267	121,054
91,137	85,099	74,427	72,906	70,975	69,848	75,872	74,053	72,322
13,020	12,799	12,699	12,782	12,680	12,799	12,844	13,013	13,178
60,185	60,648	60,279	60,303	62,109	64,091	66,121	66,656	69,143
514,462	501,544	500,226	508,267	489,450	510,500	502,769	518,745	532,964
1,207,528	1,213,323	1,222,944	1,212,446	1,277,089	1,297,226	1,305,215	1,295,146	1,245,162
371,157	354,864	323,406	281,113	230,154	210,849	189,886	182,104	175,618
16,431	14,124	9,012	5,635	797	518	293	1,435	1,828
236	227	239	242	249	239	233	257	260
43,180	45,144	26,219	19,146	18,226	18,463	24,726	23,198	16,791
12,881	13,234	12,612	12,666	12,046	9,563	9,582	8,844	8,089
2,106	2,285	2,487	2,507	2,680	2,679	2,641	2,695	2,707
102	103	108	107	108	105	109	107	106
227,285	235,025	235,720	236,543	237,441	237,440	248,449	240,161	240,707
34,506	32,925	34,272	33,896	36,142	38,671	41,963	44,300	41,953
41,242	36,173	33,556	36,516	36,241	37,454	37,669	37,746	34,802
447,159	442,313	450,746	444,656	438,340	425,063	420,067	411,385	377,923
60,247	61,887	61,855	59,339	59,444	64,273	58,579	60,965	67,522
229,151	186,087	171,138	160,986	159,862	167,347	170,735	166,806	145,461
3,113,394	2,972,734	2,464,024	2,317,234	1,967,985	1,834,118	1,712,685	1,519,193	1,401,605
63,665	53,558	47,573	44,259	42,415	43,444	43,466	43,461	41,886
14,177	14,357	14,470	14,692	14,912	15,516	15,407	15,761	15,380
252,617	261,116	271,617	261,068	279,859	294,036	285,060	299,895	309,391

1999	2000	2001	2002	2003	2004	2005	2006	2007
516,558	536,154	564,812	562,039	572,494	581,962	610,588	611,488	627,028
60,589	63,996	65,059	71,849	86,919	82,195	81,907	84,948	81,976
50,727	47,998	49,163	51,027	56,937	60,082	59,139	59,819	58,675
146,499	147,955	146,490	145,872	146,285	147,676	143,747	141,140	137,650
48,017	47,379	51,026	47,958	52,299	51,442	51,926	54,484	58,617
651,817	688,682	661,778	680,426	691,103	716,268	709,083	691,810	711,911
17,629	18,894	19,179	19,942	22,222	22,060	22,245	22,862	25,027
7,776	8,463	8,148	8,223	8,598	8,804	8,967	9,102	9,685
132,410	141,446	140,869	137,646	142,412	143,104	140,457	143,772	147,773
79,403	74,968	77,293	77,787	82,488	76,086	71,541	79,639	72,548
14,768	13,968	16,097	14,799	16,334	16,535	16,272	15,309	18,666
4,853,067	4,871,910	4,894,945	4,877,911	4,981,669	4,948,051	4,920,393	4,897,593	4,876,524
4,869,747	4,888,554	4,911,278	4,894,396	4,997,996	4,964,531	4,936,916	4,914,888	4,894,344
54,154	51,245	54,726	56,105	63,208	58,353	45,385	50,626	56,948
529,271	539,912	532,836	518,176	518,495	514,209	515,124	500,113	489,331
1,011,427	1,007,227	1,021,695	1,034,683	1,029,325	1,009,762	981,284	988,194	962,075
120,445	124,405	124,987	124,624	128,627	129,353	132,998	129,090	133,533
74,995	72,801	73,254	72,231	72,759	72,638	70,008	71,039	68,943
13,412	13,434	13,344	13,438	13,410	13,517	13,384	14,039	14,372
70,248	74,138	76,232	74,431	75,043	72,865	75,157	74,835	73,053
529,003	537,877	537,054	531,875	554,093	552,558	552,223	540,811	554,657
1,268,434	1,286,939	1,260,968	1,283,300	1,279,069	1,275,230	1,287,617	1,271,481	1,312,463
150,554	187,540	154,916	180,179	211,004	218,198	232,943	261,075	269,699
4,644	1,736	1,516	3,258	3,833	7,491	8,203	8,031	8,139
256	273	249	256	270	273	273	282	262
14,843	11,042	13,866	15,260	15,822	17,354	19,238	21,263	21,519
8,451	9,007	9,483	10,258	10,736	12,134	12,424	12,338	11,838
2,757	2,771	2,678	2,681	2,896	2,831	2,911	2,965	3,068
108	109	106	107	104	100	99	92	95
227,303	225,376	226,080	223,904	224,625	225,764	219,969	214,834	213,275
42,105	45,115	48,072	50,846	51,904	51,628	54,465	56,630	55,964
33,268	30,423	29,801	28,001	27,211	28,370	30,224	28,188	30,099
370,181	362,576	365,951	346,351	357,510	351,244	356,817	378,075	384,918
74,308	76,404	73,070	77,466	82,882	76,173	87,130	72,608	66,441
127,027	122,214	124,346	129,110	133,623	132,670	130,446	131,623	133,440
1,412,979	1,388,351	1,372,625	1,329,167	1,347,403	1,404,964	1,430,042	1,498,152	1,482,813
41,295	39,370	42,426	40,531	41,235	41,985	45,510	42,533	41,176
14,701	14,837	14,696	14,746	12,762	12,907	13,173	13,376	13,185
333,702	348,005	344,654	364,486	372,300	387,978	402,837	393,730	405,641

2008	2009	2010	2011	2012	2013	2014	2015	2016
615,682	610,620	585,955	567,660	558,726	537,737	533,056	531,636	530,431
82,554	75,796	78,890	76,369	74,344	75,835	71,956	74,346	75,217
62,850	53,018	53,639	55,801	62,243	60,242	64,480	62,550	69,680
137,773	125,193	132,591	122,039	119,122	118,982	113,222	116,826	115,498
56,345	47,979	50,722	59,363	53,979	48,138	50,493	53,789	50,810
685,960	632,333	660,211	670,561	675,507	689,518	691,262	696,854	682,316
23,643	21,344	20,968	21,769	20,269	18,153	17,314	18,813	18,841
9,529	9,247	8,985	8,552	8,032	7,280	7,657	7,748	8,835
139,781	130,308	134,195	130,902	127,007	122,716	120,838	122,696	124,599
64,302	65,831	63,162	56,327	53,600	56,416	51,937	52,887	55,801
16,664	13,513	19,069	18,743	17,547	20,288	19,316	15,745	16,920
4,725,197	4,360,301	4,468,688	4,323,426	4,261,818	4,162,144	4,003,810	4,028,204	4,017,554
4,743,261	4,377,897	4,486,100	4,340,570	4,279,010	4,179,353	4,021,040	4,045,422	4,034,531
50,114	34,055	53,478	45,543	37,634	43,890	36,968	35,056	39,518
481,712	465,835	477,846	456,809	454,349	450,727	428,959	430,894	434,365
956,881	890,025	926,173	904,573	910,136	927,963	888,305	892,815	897,140
128,761	121,498	115,393	112,323	109,060	100,964	98,987	91,611	88,224
65,509	60,962	60,937	59,720	55,269	53,421	52,552	55,409	56,837
14,777	14,453	14,326	14,033	14,043	14,022	14,035	14,090	13,997
72,042	65,895	66,427	61,445	61,788	62,133	61,064	63,945	65,037
522,827	468,948	471,099	463,377	450,914	405,756	388,780	394,436	395,561
1,250,694	1,181,607	1,232,185	1,283,929	1,323,734	1,341,897	1,295,541	1,261,893	1,251,231
273,035	270,982	299,503	289,868	296,304	301,380	324,030	333,180	337,778
7,208	9,175	12,357	11,496	9,264	9,942	14,213	12,953	10,962
284	266	250	240	250	249	217	209	197
19,973	14,482	12,025	12,771	13,244	12,461	13,747	16,599	14,478
11,707	11,185	12,092	11,842	11,469	10,739	10,371	9,933	9,600
3,076	2,881	2,912	3,000	3,190	2,863	2,878	2,191	1,899
93	88	88	86	89	90	84	89	88
212,523	207,029	218,932	204,827	200,894	200,694	192,912	201,206	200,963
48,857	48,100	47,805	52,113	55,465	57,443	55,371	55,877	54,305
27,924	22,830	29,009	26,688	29,607	28,800	30,055	31,237	29,829
378,461	362,226	381,648	374,300	367,329	361,703	357,617	359,888	373,079
62,529	59,538	57,890	56,370	56,985	55,782	54,050	59,270	60,542
129,483	109,560	103,187	109,753	105,094	94,987	93,992	94,533	91,167
1,452,560	1,268,592	1,330,618	1,441,645	1,478,639	1,434,326	1,466,044	1,492,639	1,480,903
42,676	38,615	40,219	39,172	35,695	34,731	34,660	35,166	35,576
15,065	13,150	13,232	13,343	12,855	12,046	11,481	12,905	15,278
373,746	336,953	320,257	319,929	315,212	289,025	289,664	298,872	288,154

Last Inventory Year (2017)	Change from 2005 to 2017	% Change from 2005 to 2017
534,695	(75,892)	(12)
77,355	(4,552)	(6)
80,659	21,520	36
114,280	(29,467)	(20)
53,335	1,410	3
692,027	(17,056)	(2)
20,253	(1,992)	(9)
8,429	(538)	(6)
126,540	(13,917)	(10)
52,197	(19,344)	(27)
19,087	2,816	17
4,065,089	(855,304)	(17)
4,082,225	(854,691)	(17)
34,956	(10,429)	(23)
439,420	(75,704)	(15)
891,426	(89,858)	(9)
92,212	(40,787)	(31)
58,349	(11,660)	(17)
14,087	703	5
66,741	(8,416)	(11)
409,329	(142,894)	(26)
1,232,173	(55,445)	(4)
359,095	126,152	54
9,599	1,396	17
204	(69)	(25)
15,410	(3,829)	(20)
9,892	(2,531)	(20)
2,155	(756)	(26)
87	(12)	(12)
198,860	(21,109)	(10)
56,895	2,430	4
27,722	(2,503)	(8)
379,935	23,118	6
77,777	(9,353)	(11)
92,116	(38,330)	(29)
1,577,767	147,725	10
36,853	(8,657)	(19)
15,929	2,756	21
301,903	(100,934)	(25)

Sweden
Switzerland
Turkey
Ukraine
United Kingdom of Great Britain and Northern Ireland
United States of America

Source: UNFCCC GHG Data Interface
Note 1: The reporting and review requirements for GHG inventories are different for Annex I and non-Annex I Parties. Th
Note 2: Base year data in the data interface relate to the base year under the Climate Change Convention (UNFCCC). The
Note 3: – means "No data available"
Note 4: Data displayed on the data interface are "as received" from Parties. The publication of Party submissions on this
Report produced on Monday, 20 April 2020 23:52:29 CEST

36,908	37,788	37,236	42,423	40,843	42,163	38,302	36,203	34,630
50,767	48,827	49,857	47,956	48,134	48,354	46,338	47,379	50,206
163,437	169,851	175,945	184,088	176,674	190,185	209,509	216,913	217,661
879,311	788,788	736,853	653,680	542,862	505,076	463,560	451,272	427,851
798,203	806,810	785,154	765,434	756,294	749,561	770,729	744,714	742,648
5,563,986	5,498,537	5,631,391	5,758,180	5,822,571	5,956,969	6,120,838	6,200,934	6,266,860

e definition format of data for emissions/removals from the forestry sector is different for Annex I and non-An
: base year under the Convention is defined slightly different than the base year under the Kyoto Protocol. An

website does not imply the expression of any opinion whatsoever on the part of the UNFCCC or the Secretariat

34,268	31,888	27,077	30,240	34,134	35,898	35,137	30,764	26,648
49,462	57,921	52,851	49,482	49,675	50,695	52,223	52,732	51,958
213,716	237,334	215,694	213,586	231,048	241,256	262,519	283,439	316,987
394,779	379,881	403,282	390,220	393,932	408,019	410,741	424,037	425,447
712,553	711,812	714,076	693,601	700,333	696,262	688,050	680,343	668,039
6,313,555	6,464,573	6,394,680	6,434,598	6,570,141	6,665,024	6,599,006	6,531,849	6,670,237

nex I Parties.

exception is made for European Union (KP) whereby the base year under the Kyoto Protocol is displayed.

: of the United Nations concerning the legal status of any country, territory, city or area or of its authorities, or

24,216	18,955	20,336	22,921	14,474	15,802	12,685	8,005	8,405
51,593	49,441	51,498	48,608	49,589	50,161	47,705	45,630	46,067
318,380	322,668	325,169	350,457	372,534	362,493	380,452	374,984	402,539
427,985	364,794	375,758	412,735	396,562	400,703	356,350	310,490	333,284
647,109	591,079	605,251	557,586	574,649	560,560	519,938	502,268	477,236
6,506,377	6,024,079	6,269,233	6,055,843	5,819,868	5,996,758	6,089,977	5,912,718	5,769,654

concerning the delimitation of its frontiers or boundaries as may be referred to in any of the submissions.

8,933	(26,204)	(75)
45,561	(6,662)	(13)
426,345	163,826	62
310,271	(100,470)	(24)
464,453	(223,597)	(32)
5,742,623	(856,383)	(13)

https://di.unfccc.int/time_series

Time Series - GHG total excluding LULUCF, in kt CO_2 equivalent

Party
Australia
Austria
Belarus
Belgium
Bulgaria
Canada
Croatia
Cyprus
Czechia
Denmark
Estonia
European Union (Convention)
European Union (KP)
Finland
France
Germany
Greece
Hungary
Iceland
Ireland
Italy
Japan
Kazakhstan
Latvia
Liechtenstein
Lithuania
Luxembourg
Malta
Monaco
Netherlands
New Zealand
Norway
Poland
Portugal
Romania
Russian Federation
Slovakia
Slovenia
Spain

1990	1991	1992	1993	1994	1995	1996	1997	1998
420,315	421,381	425,702	426,232	426,305	434,913	442,506	454,629	468,406
78,670	82,349	75,750	75,932	76,207	79,584	82,875	82,405	81,702
139,274	130,878	121,000	107,331	91,705	83,681	85,668	89,396	86,196
146,587	149,324	148,920	147,890	152,523	154,665	158,303	149,782	154,957
101,849	83,417	77,786	76,759	73,099	74,606	74,771	71,788	67,934
602,184	593,402	610,441	612,264	633,675	651,011	672,053	686,988	694,531
31,858	25,038	23,114	23,256	22,338	22,937	23,546	24,765	25,110
5,669	6,184	6,618	6,901	7,155	7,099	7,446	7,537	7,866
197,393	179,182	172,687	165,018	157,518	156,718	159,770	155,160	148,998
70,515	81,146	75,165	77,370	81,267	78,332	91,500	82,058	78,077
40,432	37,284	27,292	21,351	22,059	20,259	20,960	20,585	18,996
5,649,529	5,555,046	5,379,831	5,281,540	5,255,297	5,308,544	5,418,672	5,326,317	5,281,519
5,655,915	5,561,232	5,385,996	5,287,790	5,261,494	5,314,932	5,425,238	5,333,194	5,288,764
71,133	68,905	67,468	69,728	75,346	71,788	77,675	76,256	72,566
551,049	578,336	566,697	545,037	538,664	546,758	564,087	556,744	570,619
1,250,993	1,203,924	1,153,796	1,144,857	1,125,835	1,123,035	1,141,085	1,106,001	1,080,729
103,101	103,172	104,423	104,013	106,804	109,156	112,303	117,213	122,812
93,656	86,997	76,994	77,860	76,733	75,320	77,621	76,126	75,668
3,613	3,396	3,307	3,391	3,313	3,438	3,485	3,655	3,817
55,417	56,097	55,959	56,360	57,697	59,177	61,273	62,652	65,174
517,746	518,909	515,451	509,408	503,475	532,419	525,295	531,865	543,114
1,270,004	1,283,840	1,296,546	1,289,062	1,353,408	1,374,496	1,387,111	1,379,443	1,330,891
386,908	373,798	345,530	306,470	256,900	237,754	219,034	209,696	206,752
26,259	24,366	19,617	16,200	14,269	12,893	12,934	12,383	11,884
229	237	237	244	230	234	237	249	260
48,242	50,247	30,969	24,883	23,419	22,401	23,454	23,011	23,957
12,756	13,404	13,133	13,287	12,466	10,093	10,155	9,505	8,627
2,103	2,280	2,483	2,503	2,676	2,676	2,638	2,692	2,704
102	103	108	107	108	105	109	107	106
220,794	228,441	229,171	229,929	230,816	231,012	242,077	233,882	234,438
65,668	66,491	67,621	67,383	68,703	69,412	71,541	74,327	72,236
51,210	48,976	47,321	49,154	50,996	51,278	54,291	54,222	54,426
474,350	462,290	449,316	448,829	443,646	444,963	458,390	449,501	417,992
59,092	60,796	65,086	63,670	64,536	68,927	66,652	69,943	74,682
248,068	204,953	190,986	182,119	180,179	187,179	189,565	186,027	166,824
3,186,796	3,024,288	2,537,054	2,399,329	2,137,001	2,084,833	2,029,805	1,912,592	1,879,190
73,365	63,958	58,560	55,029	52,695	53,273	53,196	53,085	52,500
18,639	17,320	17,419	17,621	18,025	18,721	19,356	19,708	19,464
288,492	296,204	305,976	295,738	312,540	328,614	320,379	334,704	344,566

1999	2000	2001	2002	2003	2004	2005	2006	2007
474,027	485,019	492,462	496,319	498,119	515,931	521,801	526,437	533,138
80,105	80,415	84,324	86,111	91,788	91,383	92,567	90,117	87,473
82,811	81,241	81,243	79,936	82,104	86,916	88,283	92,216	91,742
148,645	149,730	148,132	147,567	147,932	149,231	145,284	142,660	138,961
60,690	59,567	62,678	59,718	64,193	63,342	63,907	64,485	68,359
707,376	730,588	719,733	724,349	741,003	742,972	730,349	721,445	743,767
26,213	25,861	27,056	28,095	29,515	29,627	30,012	30,394	31,794
8,135	8,394	8,334	8,560	8,950	9,152	9,344	9,554	9,893
139,448	149,334	149,097	145,506	148,759	149,625	147,494	148,599	150,337
75,672	71,368	73,066	72,590	77,645	71,511	67,091	74,859	70,293
17,652	17,360	17,760	17,221	19,110	19,375	19,203	18,498	22,225
5,172,644	5,168,912	5,223,118	5,182,923	5,265,583	5,265,369	5,228,429	5,214,525	5,162,425
5,179,974	5,176,190	5,230,071	5,190,004	5,272,512	5,272,444	5,235,539	5,222,343	5,170,735
71,981	70,130	75,490	77,947	85,532	81,841	69,813	81,174	79,513
562,661	556,370	561,355	554,879	559,544	557,794	559,499	547,093	536,948
1,047,034	1,045,187	1,060,271	1,038,920	1,035,574	1,019,124	993,344	1,000,638	973,942
122,983	126,346	127,399	127,395	131,132	131,814	136,281	132,391	134,997
76,138	73,208	75,244	73,602	76,639	75,605	75,360	74,143	72,384
4,040	4,047	3,945	4,015	3,993	4,097	3,957	4,558	4,863
66,309	68,478	70,475	68,429	68,663	67,964	69,495	68,782	68,018
548,226	554,106	561,225	561,243	575,696	579,999	580,600	570,045	560,569
1,354,486	1,374,847	1,349,407	1,373,198	1,379,176	1,371,762	1,378,957	1,357,395	1,393,442
178,741	214,269	174,886	194,281	217,078	226,064	240,225	267,027	276,542
11,102	10,488	11,062	11,043	11,222	11,207	11,388	11,884	12,339
257	248	247	254	264	264	265	268	239
21,139	19,603	20,359	20,749	20,895	21,760	22,966	23,252	25,389
9,093	9,678	10,165	10,942	11,381	12,783	13,025	12,852	12,267
2,755	2,768	2,676	2,680	2,895	2,830	2,910	2,963	3,066
108	109	107	107	104	100	99	92	95
221,105	219,304	220,007	217,879	218,564	219,970	214,308	209,234	207,700
74,083	76,180	79,103	79,387	81,591	81,251	83,270	83,442	81,325
55,365	54,832	56,118	55,029	55,694	56,203	55,367	55,327	57,013
406,560	395,472	394,371	384,386	398,005	403,040	403,424	418,138	418,633
82,758	82,082	81,690	85,601	80,266	83,349	85,610	80,855	78,575
147,872	143,126	146,156	148,861	153,745	152,516	151,352	152,072	153,117
1,904,986	1,900,820	1,941,994	1,923,732	1,958,582	1,973,484	1,993,963	2,056,688	2,058,076
51,158	49,263	51,559	50,189	50,471	51,234	51,230	51,111	49,331
18,833	19,076	19,994	20,176	19,900	20,217	20,519	20,707	20,847
372,043	387,528	385,241	403,569	410,975	426,793	441,038	434,006	445,158

2008	2009	2010	2011	2012	2013	2014	2015	2016
537,032	540,913	537,275	538,281	540,616	530,434	524,957	535,174	546,772
86,816	80,329	84,753	82,460	79,811	80,353	76,680	78,897	79,596
95,568	91,458	93,766	93,378	94,271	95,364	94,588	89,959	91,583
138,828	126,263	132,922	122,198	119,373	119,304	113,506	117,122	115,783
66,954	57,970	60,550	65,852	60,779	55,513	58,528	61,709	59,085
723,225	681,699	692,619	703,379	711,023	722,063	723,091	721,992	707,727
30,849	28,497	28,085	27,789	25,916	24,555	23,763	24,247	24,385
10,041	9,789	9,473	9,117	8,577	7,860	8,234	8,321	8,759
145,614	137,215	139,734	137,753	133,698	128,691	126,758	127,778	129,757
66,657	63,876	64,178	58,947	54,335	56,021	51,871	49,254	51,298
20,046	16,758	21,214	21,259	20,171	21,942	21,147	18,127	19,665
5,046,999	4,681,900	4,783,628	4,626,382	4,563,065	4,468,920	4,297,636	4,327,313	4,303,392
5,055,532	4,689,990	4,791,564	4,634,079	4,570,816	4,476,708	4,305,469	4,335,146	4,311,021
71,399	67,804	75,627	67,805	62,415	62,894	58,733	55,123	58,044
530,315	510,351	517,116	491,009	490,856	491,141	461,479	466,385	467,622
975,646	908,054	942,542	920,306	924,611	942,250	903,196	907,190	911,049
131,716	124,535	118,436	115,454	112,146	102,547	99,113	95,330	91,698
70,576	64,586	64,949	63,351	59,647	56,796	57,416	60,767	61,140
5,251	4,953	4,855	4,591	4,611	4,608	4,644	4,726	4,651
67,302	61,547	61,105	56,989	57,612	57,410	57,099	59,212	61,270
547,847	496,178	505,773	492,475	472,722	442,708	426,212	434,044	432,119
1,321,398	1,248,599	1,302,732	1,353,795	1,396,605	1,408,057	1,360,071	1,321,467	1,305,751
280,068	274,904	306,787	298,394	305,171	312,754	333,480	344,801	345,759
11,874	11,176	12,279	11,489	11,327	11,260	11,173	11,256	11,269
259	244	229	216	226	232	201	198	188
24,477	20,152	21,009	21,575	21,503	20,258	20,215	20,479	20,510
12,154	11,608	12,180	12,062	11,781	11,239	10,787	10,295	10,052
3,074	2,878	2,910	2,997	3,187	2,860	2,875	2,188	1,896
93	88	88	86	89	90	84	89	88
207,095	201,413	213,363	199,235	195,347	194,954	187,282	195,560	195,384
81,267	78,477	78,965	78,679	81,055	80,541	81,310	81,202	79,136
55,596	53,178	55,467	54,638	54,090	54,015	54,127	54,450	53,608
411,396	393,443	411,669	411,034	403,648	399,974	387,087	390,445	399,123
76,157	73,032	68,801	67,417	65,556	63,711	63,709	67,735	65,936
149,573	129,622	123,905	129,230	125,917	116,305	116,329	116,463	114,272
2,097,173	1,960,224	2,057,673	2,120,497	2,146,305	2,090,717	2,089,475	2,093,653	2,097,477
49,830	45,532	46,367	45,641	43,120	42,827	40,779	41,782	42,298
21,573	19,602	19,626	19,635	19,062	18,359	16,626	16,820	17,681
411,404	372,107	357,677	357,344	350,672	323,441	326,121	337,599	326,383

Last Inventory Year (2017)	Change from 2005 to 2017	% Change from 2005 to 2017
554,127	32,326	6
82,261	(10,305)	(11)
93,960	5,677	6
114,540	(30,744)	(21)
61,367	(2,540)	(4)
715,749	(14,600)	(2)
25,020	(4,993)	(17)
8,963	(381)	(4)
128,675	(18,819)	(13)
49,226	(17,865)	(27)
20,880	1,677	9
4,323,163	(905,265)	(17)
4,330,978	(904,561)	(17)
55,334	(14,479)	(21)
471,028	(88,471)	(16)
906,611	(86,732)	(9)
95,421	(40,860)	(30)
63,788	(11,572)	(15)
4,766	809	20
60,744	(8,751)	(13)
427,708	(152,892)	(26)
1,289,631	(89,326)	(6)
366,174	125,949	52
11,306	(82)	(1)
194	(71)	(27)
20,706	(2,260)	(10)
10,236	(2,789)	(21)
2,152	(758)	(26)
87	(12)	(12)
193,260	(21,049)	(10)
80,853	(2,417)	(3)
52,713	(2,654)	(5)
413,781	10,357	3
70,546	(15,064)	(18)
113,796	(37,557)	(25)
2,155,471	161,508	8
43,438	(7,792)	(15)
17,453	(3,066)	(15)
340,231	(100,807)	(23)

Sweden
Switzerland
Turkey
Ukraine
United Kingdom of Great Britain and Northern Ireland
United States of America

Source: UNFCCC GHG Data Interface
Note 1: The reporting and review requirements for GHG inventories are different for Annex I and non-Annex I Parties. Th
Note 2: Base year data in the data interface relate to the base year under the Climate Change Convention (UNFCCC). The
Note 3: – means "No data available"
Note 4: Data displayed on the data interface are "as received" from Parties. The publication of Party submissions on this
Report produced on Monday, 20 April 2020 23:52:29 CEST

71,304	71,482	70,923	71,192	73,571	73,287	76,894	72,137	72,496
53,252	55,117	54,879	52,325	51,325	52,189	52,800	51,610	53,253
219,202	226,578	232,802	240,149	234,127	247,585	267,232	278,607	280,288
938,603	852,384	797,505	707,344	601,634	558,898	512,482	496,743	478,325
797,948	807,119	786,249	766,961	757,972	751,272	773,286	747,862	746,500
6,371,001	6,315,615	6,424,934	6,532,070	6,624,836	6,710,067	6,907,699	6,968,462	7,032,526

e definition format of data for emissions/removals from the forestry sector is different for Annex I and non-An
: base year under the Convention is defined slightly different than the base year under the Kyoto Protocol. An

website does not imply the expression of any opinion whatsoever on the part of the UNFCCC or the Secretariat

69,631	68,483	68,854	69,791	70,212	69,319	66,587	66,536	64,936
52,976	52,352	53,893	52,266	53,401	54,029	54,714	54,335	52,442
277,759	298,890	280,411	286,073	305,596	314,951	337,213	358,155	391,423
447,312	425,536	443,633	428,806	438,332	440,910	440,085	457,685	461,192
715,997	715,687	718,693	699,148	706,205	702,933	695,165	688,015	676,322
7,071,461	7,232,011	7,116,810	7,156,653	7,199,263	7,333,052	7,339,040	7,270,327	7,369,968

nex I Parties.
exception is made for European Union (KP) whereby the base year under the Kyoto Protocol is displayed.

: of the United Nations concerning the legal status of any country, territory, city or area or of its authorities, or

62,566	58,340	64,282	60,207	56,873	55,366	53,832	53,461	52,943
53,914	52,562	54,117	50,029	51,456	52,229	48,364	47,816	48,183
387,593	395,515	398,661	427,572	446,935	438,969	457,962	472,191	498,469
448,601	388,280	405,103	426,080	415,232	406,507	360,267	316,771	335,116
655,903	599,871	614,361	567,161	583,653	569,902	529,503	511,980	487,035
7,160,601	6,709,369	6,938,592	6,787,419	6,545,969	6,710,218	6,759,996	6,623,775	6,492,267

concerning the delimitation of its frontiers or boundaries as may be referred to in any of the submissions.

52,660	(13,927)	(21)
47,159	(7,555)	(14)
526,253	189,040	56
320,626	(119,459)	(27)
474,346	(220,819)	(32)
6,456,718	(882,322)	(12)

https://di.unfccc.int/time_series

Time Series - GHG total excluding LULUCF, in kt CO_2 equivalent

Party
Australia
Austria
Belarus
Belgium
Bulgaria
Canada
Croatia
Cyprus
Czechia
Denmark
Estonia
European Union (Convention)
European Union (KP)
Finland
France
Germany
Greece
Hungary
Iceland
Ireland
Italy
Japan
Kazakhstan
Latvia
Liechtenstein
Lithuania
Luxembourg
Malta
Monaco
Netherlands
New Zealand
Norway
Poland
Portugal
Romania
Russian Federation
Slovakia
Slovenia
Spain

1990	1991	1992	1993	1994	1995	1996	1997	1998
278,424	279,872	284,912	289,235	294,015	305,410	312,361	320,795	334,684
62,323	65,931	60,442	60,806	61,199	64,268	67,694	67,464	67,067
104,139	97,044	89,994	77,619	64,375	57,950	59,204	62,548	59,412
120,482	123,543	122,656	121,555	124,939	126,080	129,579	124,043	130,281
76,542	61,126	56,918	57,562	55,958	57,573	57,972	55,590	53,176
462,502	452,535	466,708	466,578	481,647	494,241	509,694	524,433	533,101
23,337	17,189	16,513	16,966	16,225	16,933	17,524	18,586	19,290
4,665	5,154	5,530	5,774	6,018	5,889	6,240	6,328	6,621
164,204	148,894	144,618	138,636	132,374	131,606	134,960	130,729	125,313
54,850	65,434	59,599	61,687	65,704	62,658	75,989	66,605	62,398
37,067	34,036	24,512	19,064	19,899	18,202	18,923	18,480	16,907
4,469,107	4,416,638	4,271,613	4,189,143	4,171,079	4,216,399	4,319,594	4,231,575	4,224,398
4,473,507	4,420,935	4,276,126	4,193,816	4,175,712	4,221,199	4,324,586	4,236,789	4,229,821
56,972	55,230	54,286	56,353	61,716	58,145	64,062	62,723	59,373
403,207	428,779	418,208	398,481	393,286	400,546	416,025	408,966	428,543
1,052,520	1,014,440	966,177	956,517	939,908	939,543	959,606	931,750	923,824
83,375	83,351	84,916	84,229	86,392	86,946	89,099	93,804	98,625
73,445	69,782	62,421	63,553	61,897	61,627	63,188	61,775	61,357
2,237	2,118	2,263	2,421	2,362	2,465	2,520	2,616	2,635
32,891	33,620	33,431	33,662	34,784	35,805	37,421	38,763	40,659
439,640	439,345	437,251	430,545	424,811	451,433	444,186	448,835	459,908
1,158,515	1,170,048	1,179,751	1,172,721	1,227,636	1,239,998	1,252,071	1,245,320	1,205,590
266,608	257,243	233,050	204,856	170,561	162,800	149,062	140,013	135,083
19,505	17,784	14,080	11,819	10,297	9,090	9,171	8,646	8,281
199	206	207	215	201	204	206	218	229
35,810	37,910	21,217	16,376	15,786	15,054	15,735	15,167	15,993
11,848	12,466	12,218	12,361	11,552	9,160	9,209	8,566	7,687
1,943	2,112	2,305	2,318	2,484	2,477	2,436	2,482	2,485
97	98	103	102	103	100	103	102	101
162,428	170,842	170,681	170,870	171,456	173,030	182,451	175,288	176,403
25,455	26,120	28,114	27,708	27,889	28,011	29,306	31,301	29,896
35,323	33,818	34,737	36,224	38,087	38,704	41,824	41,920	42,211
376,960	374,274	364,682	365,107	360,746	362,428	376,447	367,768	338,543
45,631	47,246	51,516	50,130	50,883	54,854	52,159	55,177	59,669
169,431	139,883	130,804	122,861	122,007	126,985	130,068	122,958	107,533
2,525,501	2,396,186	1,957,863	1,859,648	1,641,541	1,613,078	1,580,299	1,475,291	1,458,299
61,577	53,383	48,976	46,429	43,826	44,267	44,128	44,255	44,012
15,094	14,001	14,007	14,303	14,643	15,255	15,917	16,245	15,961
231,061	240,656	249,362	241,009	253,533	267,227	254,637	267,160	275,694

1999	2000	2001	2002	2003	2004	2005	2006	2007
344,063	350,195	357,669	362,209	369,726	383,205	386,515	392,682	400,415
65,737	66,313	70,275	72,124	77,799	77,921	79,395	77,061	74,469
56,996	55,463	55,564	55,682	57,118	60,773	62,056	64,868	64,271
124,703	126,769	126,120	126,305	127,806	128,830	125,520	123,833	120,445
46,279	45,211	48,923	46,167	50,416	49,507	50,591	51,826	55,637
548,939	571,507	564,231	570,552	587,492	586,469	576,859	570,811	594,732
20,127	19,699	20,817	21,925	23,278	22,925	23,384	23,603	24,919
6,891	7,140	7,016	7,205	7,599	7,834	8,021	8,212	8,528
116,618	127,060	126,952	123,889	127,376	128,110	125,671	126,447	128,261
59,844	55,611	57,325	56,898	62,057	56,503	52,934	60,859	56,103
15,725	15,360	15,706	15,231	17,085	17,284	17,132	16,435	20,067
4,158,854	4,180,838	4,251,916	4,230,009	4,320,360	4,330,022	4,306,544	4,310,987	4,260,780
4,164,338	4,186,363	4,257,153	4,235,435	4,325,691	4,335,507	4,312,067	4,316,749	4,267,050
58,895	57,038	62,536	65,060	72,658	68,961	57,043	68,384	66,760
424,776	419,301	424,113	419,613	426,334	427,389	430,989	420,040	409,653
896,313	900,376	916,913	900,387	901,409	887,458	866,640	878,076	851,418
97,942	102,982	105,369	105,011	109,083	109,530	113,925	112,465	114,583
61,839	58,560	60,176	59,179	61,952	60,424	60,510	59,850	58,553
2,841	2,934	2,863	2,988	2,980	3,101	2,969	3,147	3,494
42,387	45,200	47,562	46,033	45,637	46,128	48,120	47,565	47,636
464,291	470,294	475,966	477,505	490,750	494,591	494,458	489,002	479,078
1,242,192	1,264,978	1,250,344	1,279,555	1,287,782	1,283,044	1,290,310	1,267,158	1,302,894
108,096	133,407	127,628	146,016	163,629	170,164	183,774	206,516	213,014
7,696	7,065	7,475	7,509	7,728	7,738	7,813	8,314	8,636
227	217	215	220	229	229	229	231	201
13,479	11,880	12,596	12,691	12,665	13,268	14,192	14,500	15,844
8,140	8,729	9,222	9,999	10,470	11,849	12,109	11,938	11,333
2,531	2,526	2,426	2,421	2,627	2,540	2,596	2,604	2,683
101	99	99	99	96	91	89	83	83
170,993	171,943	177,082	176,374	179,828	181,449	177,530	172,733	172,599
31,488	32,298	34,476	34,658	36,375	35,961	37,593	37,486	36,577
42,962	42,515	43,867	42,984	44,323	44,646	43,951	44,496	46,239
328,856	318,209	314,602	306,731	319,481	323,645	322,546	335,658	335,610
67,300	66,128	65,760	69,604	64,487	67,275	69,554	64,829	62,329
90,751	95,428	100,327	101,700	105,262	104,235	102,662	105,046	106,889
1,486,251	1,471,235	1,507,718	1,495,710	1,525,644	1,530,777	1,547,693	1,606,722	1,604,778
43,139	41,224	43,320	42,051	42,378	42,867	42,851	42,614	41,004
15,337	15,445	16,378	16,525	16,289	16,651	16,948	17,142	17,279
299,122	310,828	312,737	332,893	336,870	353,369	368,056	359,302	367,223

2008	2009	2010	2011	2012	2013	2014	2015	2016
405,049	408,345	406,426	404,264	406,987	398,052	393,289	402,538	413,157
73,727	67,724	72,228	70,143	67,577	68,161	64,467	66,733	67,315
66,417	61,962	63,883	62,823	63,707	64,462	63,794	59,291	60,942
120,352	107,699	113,814	104,319	101,515	101,579	95,906	99,753	98,422
53,974	45,706	47,794	53,118	48,269	42,566	45,090	48,095	45,258
575,454	543,068	556,420	566,674	570,158	577,346	577,360	576,757	564,068
23,660	21,849	21,064	20,699	19,116	18,455	17,708	17,841	18,083
8,696	8,444	8,082	7,760	7,229	6,551	6,931	6,957	7,362
122,974	115,224	117,460	115,005	110,905	106,377	104,015	104,786	106,599
52,648	50,201	50,695	45,666	41,229	43,082	38,872	36,514	38,329
17,871	14,610	19,016	19,098	17,936	19,698	18,904	15,891	17,477
4,162,050	3,825,045	3,941,225	3,796,391	3,737,540	3,650,091	3,480,708	3,514,527	3,497,546
4,168,449	3,831,244	3,947,274	3,802,345	3,743,540	3,656,126	3,486,736	3,520,556	3,503,418
58,612	55,923	64,097	56,579	51,222	51,757	47,657	44,124	47,241
403,280	386,291	394,447	370,061	370,672	371,869	341,304	346,936	349,248
853,771	788,924	832,388	809,749	814,138	831,570	792,793	795,940	801,655
111,113	104,341	97,343	94,532	91,418	81,723	78,650	74,959	71,367
57,455	51,801	52,138	50,376	46,830	43,780	43,925	46,677	47,430
3,795	3,731	3,621	3,486	3,489	3,482	3,462	3,533	3,490
47,316	42,109	41,678	38,000	38,179	37,166	36,671	38,429	39,895
467,472	416,675	426,351	413,944	392,630	364,089	348,547	355,785	353,487
1,232,232	1,162,961	1,214,424	1,264,518	1,305,886	1,315,077	1,264,880	1,224,539	1,206,166
213,167	208,337	236,262	226,772	233,696	240,136	261,488	273,891	274,252
8,197	7,457	8,554	7,810	7,520	7,385	7,188	7,279	7,232
220	205	191	177	185	193	161	159	149
15,221	13,052	13,964	14,303	14,363	13,367	13,120	13,335	13,368
11,199	10,652	11,217	11,113	10,847	10,297	9,825	9,331	9,076
2,759	2,531	2,532	2,612	2,771	2,438	2,426	1,718	1,413
81	78	76	74	77	78	73	76	75
175,524	170,186	182,186	169,111	165,878	165,764	158,827	166,451	166,387
37,593	34,772	34,997	34,314	35,986	35,310	35,622	35,839	34,260
45,382	43,891	46,229	45,512	45,022	44,947	44,890	45,304	44,463
328,822	315,452	333,457	333,013	325,488	321,169	308,729	312,321	323,022
59,975	57,139	52,937	51,737	49,915	48,113	47,984	52,169	50,368
105,190	87,602	84,022	89,738	86,534	77,180	77,547	77,771	75,798
1,637,200	1,529,228	1,613,523	1,667,031	1,679,385	1,618,434	1,617,678	1,622,498	1,617,653
41,404	37,654	38,499	38,066	35,979	35,570	33,638	34,467	34,893
18,216	16,325	16,369	16,354	15,813	15,179	13,524	13,612	14,414
335,679	296,597	283,109	284,041	278,646	251,973	254,518	271,100	260,289

Last Inventory Year (2017)	Change from 2005 to 2017	% Change from 2005 to 2017
417,041	30,526	8
69,979	(9,416)	(12)
62,699	643	1
97,564	(27,956)	(22)
47,402	(3,189)	(6)
571,139	(5,720)	(1)
18,717	(4,667)	(20)
7,538	(483)	(6)
105,607	(20,064)	(16)
36,283	(16,651)	(31)
18,654	1,523	9
3,515,490	(791,054)	(18)
3,521,555	(790,512)	(18)
44,705	(12,338)	(22)
352,285	(78,704)	(18)
797,966	(68,674)	(8)
74,845	(39,080)	(34)
49,646	(10,864)	(18)
3,614	646	22
38,728	(9,392)	(20)
348,991	(145,467)	(29)
1,188,122	(102,187)	(8)
292,999	109,225	59
7,235	(578)	(7)
155	(74)	(32)
13,628	(564)	(4)
9,243	(2,866)	(24)
1,609	(988)	(38)
73	(16)	(18)
164,478	(13,052)	(7)
36,024	(1,569)	(4)
43,702	(249)	(1)
336,557	14,011	4
54,658	(14,896)	(21)
74,998	(27,663)	(27)
1,647,041	99,348	6
36,034	(6,817)	(16)
14,259	(2,689)	(16)
274,427	(93,629)	(25)

Sweden
Switzerland
Turkey
Ukraine
United Kingdom of Great Britain and Northern Ireland
United States of America

Source: UNFCCC GHG Data Interface
Note 1: The reporting and review requirements for GHG inventories are different for Annex I and non-Annex I Parties. Th
Note 2: Base year data in the data interface relate to the base year under the Climate Change Convention (UNFCCC). The
Note 3: – means "No data available"
Note 4: Data displayed on the data interface are "as received" from Parties. The publication of Party submissions on this
Report produced on Monday, 20 April 2020 23:52:29 CEST

57,446	57,678	57,392	57,340	59,785	59,200	63,154	58,087	58,640
44,162	46,141	46,016	43,605	42,679	43,414	44,099	43,035	44,613
151,508	157,982	163,922	171,011	167,433	180,903	199,522	212,006	212,040
705,832	632,539	589,062	510,201	419,268	389,866	351,410	340,244	328,580
601,481	609,308	593,748	579,700	575,833	567,354	589,063	562,980	568,148
5,121,179	5,071,564	5,174,671	5,281,387	5,375,034	5,436,698	5,625,042	5,701,921	5,749,893

e definition format of data for emissions/removals from the forestry sector is different for Annex I and non-An
: base year under the Convention is defined slightly different than the base year under the Kyoto Protocol. An

website does not imply the expression of any opinion whatsoever on the part of the UNFCCC or the Secretariat

55,819	54,678	55,650	56,597	57,178	56,422	53,785	53,613	52,756
44,442	43,612	45,076	43,459	44,644	45,229	45,780	45,366	43,360
207,804	229,791	213,486	220,978	236,484	244,464	264,201	281,649	312,737
298,205	285,338	303,561	295,675	307,019	310,365	313,120	332,673	336,366
561,198	567,902	576,721	560,803	572,282	573,786	570,497	568,098	559,916
5,829,520	5,997,299	5,899,855	5,942,421	5,991,191	6,105,444	6,130,552	6,050,385	6,127,888

nex I Parties.

exception is made for European Union (KP) whereby the base year under the Kyoto Protocol is displayed.

: of the United Nations concerning the legal status of any country, territory, city or area or of its authorities, or

50,641	47,068	52,845	48,895	46,323	44,738	43,176	43,057	42,582
44,707	43,529	45,043	40,979	42,248	43,179	39,229	38,728	39,187
309,321	315,360	314,380	339,482	353,666	345,221	361,675	381,332	401,240
325,535	277,295	294,079	307,958	303,965	297,295	257,588	223,910	234,204
545,412	494,890	512,672	470,414	488,341	478,459	439,580	423,122	400,554
5,928,256	5,493,548	5,700,108	5,572,585	5,371,777	5,522,908	5,572,106	5,422,966	5,306,662

concerning the delimitation of its frontiers or boundaries as may be referred to in any of the submissions.

42,050	(11,735)	(22)
38,172	(7,608)	(17)
425,330	161,129	61
223,220	(89,900)	(29)
388,101	(182,396)	(32)
5,270,749	(859,804)	(14)

Message

From: Sweeney, Katie [KSweeney@nma.org]
Sent: 4/24/2020 5:59:02 PM
To: Hyman, Alana [Hyman.Alana@epa.gov]; Bolen, Brittany [bolen.brittany@epa.gov]; Benevento, Douglas [benevento.douglas@epa.gov]; Gunasekara, Mandy [gunasekara.Mandy@epa.gov]
Subject: Letter to Administrator Wheeler from National Mining Association
Attachments: Final Wheeler Letter April 2020.pdf; American Mining Supports Efforts to fight COVID.pdf; Mining Key to Recovery Rich Nolan NMA.pdf

Good afternoon,

Please see attached a letter from National Mining Association (NMA) President & CEO Rich Nolan requesting a meeting with Administrator Wheeler on regulatory relief that will help NMA member companies contribute to the upcoming economic recovery. Along with the letter, I've also attached a summary of steps our NMA member companies have taken to help fight the COVID-19 pandemic and an op-ed outlining mining's role in the economic recovery. We appreciate your consideration of this request. If you have any questions, my full contact information is provided below.

Hope you all are safe and healthy.

Best,

Katie Sweeney

Katie Sweeney
Executive Vice President & General Counsel
National Mining Association
101 Constitution Ave. NW, Suite 500 East
Washington, D.C. 20001
Phone: (202) 463-2600
Direct: (202) 463-2627
KSweeney@nma.org

RICH NOLAN
President & CEO

April 23, 2020

The Honorable Andrew Wheeler
Administrator
U.S. Environmental Protection Agency
1200 Pennsylvania Avenue, N.W.
Washington, D.C. 20460

Dear Administrator Wheeler:

Domestic mining remains vital to helping the nation weather this COVID-19 storm and the nation's eventual road to a strong recovery. As a Department of Homeland Security designated essential industry, our mines continue to safely operate to produce the required minerals that are the building blocks of America's industrial base and manufacturing supply chains.

The unprecedented economic toll already wrought by COVID-19 and the measures taken to combat it have policymakers rightfully exploring additional rounds of incentives to jumpstart the economy and put Americans back to work. We appreciate the Administration contemplating additional regulatory certainty as part of its plans for the nation's economic recovery. Your efforts to date at the U.S. Environmental Protection Agency (EPA) to ensure certainty and predictable permitting processes have given the industry a fighting chance to survive the storm. Now, with your continued help we can work together to build the recovery.

The National Mining Association (NMA) would like to meet with you and partner with your team to put additional and specific incentives in place:

- **Groundwater Permitting**

A lack of clarity on whether discharges to groundwater are subject to regulation under the Clean Water Act (CWA) has led to an increasing number of CWA citizen lawsuits that could impact the mining industry. The new decision this week from the U.S. Supreme Court in *County of Maui v. Hawai'i Wildlife Fund* creates even more uncertainty and as a result there is increased urgency for EPA to move forward with a rulemaking. Furthermore, in addition to providing durable clarification that groundwater discharges are not subject to CWA regulation, the rulemaking should more broadly expand that interpretation to other indirect discharges such as those from smokestacks or rail cars.

- **CWA Section 401 State Certification Process**

While a 2019 executive order addressed a significant hurdle to exports—state misuse of the CWA section 401 certification process to block export projects—additional action is necessary to ensure the long-term viability of the United States as a major coal exporter. NMA urges EPA to finalize its proposed 2019 CWA section 401 rule to modernize the process for review and approval of section 401 state certifications and prevent abuse of the process.

- **Compensatory Mitigation**

In 2019, EPA took an important first step to initiate revisions to the 2008 compensatory mitigation rule. The mining industry needs additional flexibility in the implementation of mitigation requirements that account for the temporary nature of mining impacts and extensive reclamation work undertaken by mining companies, and to address overly burdensome requirements for compensatory mitigation projects, including financial assurances and conservation easements. NMA urges EPA to make this rulemaking a priority.

- **CWA Section 404(c) Vetoes**

Under the previous administration, EPA significantly expanded the application of its CWA Sec. 404(c) veto to both retroactively revoke an existing 404 permit for a coal mining operation and to preemptively veto a minerals mining operation prior to the submission of a permit application. To restore regulatory certainty, reinstate state authority over land use permitting, and foster capital investment, job creation and economic growth, EPA must undertake a rulemaking to establish commonsense limitations on this authority.

- **National Ambient Air Quality Standards (NAAQS) Reviews of Ozone and Particulate Matter**

Over the last several months, EPA completed key steps in the NAAQS review process for particulate matter and ozone consistent with your commitment to complete the five-year review process in a timely, efficient, and transparent manner. Just last week, EPA released its proposal to retain the current particulate matter standard and is anticipated to propose its decision on ozone later this year. NMA supports the retention of both standards as they protect public health and the environment with an adequate margin of safety. Importantly, retaining these standards will avoid additional unnecessary and burdensome permitting requirements and controls on mining operations and other industrial facilities.

- **New Source Review (NSR) Reforms Designed to Accompany the Affordable Clean Energy (ACE) Rule**

EPA's ACE rule was intended to be accompanied by NSR reforms to remove barriers to efficiency improvements at coal plants. Ultimately, the NSR revisions were severed from the ACE rule to allow consideration of technical issues related to the modified NSR threshold test using hourly emission rate changes. NMA urges EPA to expeditiously issue the final NSR rule to avoid the expensive and lengthy permitting requirements for efficiency upgrades that will reduce emissions per unit of electricity produced and as a result, the hourly emission rate at any given level of electricity demand.

- **Coal Combustion Residuals (CCR) Regulation**

The prior administration's 2015 rule on the disposal of CCR threatened the economic viability of coal-fired power plants and resulted in premature closures. NMA recognizes that EPA's numerous efforts to reform the 2015 rule have been complicated and delayed by adverse court decisions. NMA appreciates EPA's reconsideration efforts and encourages the agency to finalize the four rules currently in process to provide permitting and regulatory certainty for coal-fired power plants. NMA encourages the agency to carefully consider industry stakeholder comments to ensure these rules provide maximum flexibility for safely operating impoundments and landfills or closing such units and securing alternate disposal capacity.

- **Powerplant Effluent Limitation Guidelines (ELGs)**

In late 2019, EPA proposed revisions to the overly stringent 2015 ELGs that threatened to cause premature coal plant closures. NMA urges EPA to finalize its modifications to provide more flexible standards and compliance timeframes related to flue gas desulfurization wastewater and bottom ash transport water.

- **New Source Performance Standards (NSPS) for New or Modified Coal Plants**

In late 2018, EPA proposed revisions to the 2015 rule that required carbon capture and storage (CCS) for new or modified coal plants, which posed a major technological hurdle for new plants or upgrades to existing plants. EPA must proceed with finalization of that rule to eliminate the CCS requirement and provide a path forward for commercially viable, advanced coal technology.

NMA is committed to partnering with you in support of these lawful and rational recovery initiatives. We would welcome the opportunity to meet with you and your team. Thank you again for your time and recognition of our industry and its contributions to the economy and well-being of our nation. If you have any questions regarding this letter, please contact me at (202) 463-2619 or cpak@nma.org.

Sincerely,

Rich Nolan

ED_014208_00000050-00004

The American Mining Industry Responds to the COVID-19 Health Crisis

The American mining industry is coming together to aid communities and help fight COVID-19. National Mining Association members are doing their part by providing financial assistance, educational tools and personal protective equipment. Read below about just a few of the many acts of community involvement and support from our member companies.

Alliance Coal subsidiary Matrix Design is proud to be able to support the medical community during this time of need. Through Matrix Design Group, it has been producing face shields using 3D-printing technology and providing them to medical professionals.

Bayer has donated one million products, including over-the-counter medications and multivitamins, which will be delivered directly to Americans who can't easily access them by way of partnerships with Direct Relief and Feeding America.

Caterpillar Foundation, the philanthropic arm of Caterpillar Inc., announced it is committing $8.5 million to support global communities, including underserved populations, who are affected by the virus. The Foundation's investment will support nonprofit organizations who are working to help prevent, detect and respond to the pandemic; providing resources to hospitals, medical staff and patients; addressing food insecurity; and enabling online STEM and coding education for youth impacted by school closures.

Coeur Mining is supporting communities from the U.S. to Mexico, from Chicago to Palmarejo, in a number of ways to assist those fighting the COVID-19 pandemic, and care for those impacted by it. Its efforts have included donating hand sanitizer, masks and gloves to hospitals and non-profits; supporting the construction of a drive-through COVID-19 testing center; providing food for families and individuals who are in need; matching employee contributions to Project C.U.R.E., an organization providing support to front-line workers; and donating to shelters and food banks in its communities.

Cummins is working with Dupont to help address the current shortage of N95 masks in the United States and elsewhere around the world. The company will use preexisting filter technology in partnership with DuPont to help fill the supply void and is re-evaluating its supply base and manufacturing capabilities to identify how the company can support efforts to fight COVID-19. The project also aims to provide open source instructions that other healthcare systems and groups can use to create their own respirator masks.

The Cummins Foundation, a 501(c)(3) charitable organization that operates separately from the company, is focusing its emergency COVID-19 funding on childcare, nutrition, basic needs and remote learning assistance in communities around the world where the company has a significant presence. For example, it is issuing emergency grants to non-profits addressing the needs of families and children impacted by the COVID-19 crisis in cities where the company is a critical employer with a significant role in the prosperity of the community.

Freeport-McMoRan is a company that promotes proactive and open relationships with community, government and other stakeholders to maximize the positive impacts of its operations. The company works in the United States and around the world to support the communities in which it has operations and, during this crisis, is helping out in many ways. One example is at its Sierrita Mine in Arizona, which recently donated personal protective equipment to a local fire station.

ED_014208_00000051-00001

Hecla Mining Company's charitable foundation has contributed more than $3.4 million to communities since its establishment in 2007. Given the special needs arising from the pandemic, Hecla expects the foundation to initially contribute up to $125,000 more than usual. An initial $20,000 matching contribution has been made to the Southeast Alaska food bank.

Midas Gold launched Hayley's STEAM Power Hour to help parents and kids with lesson plans while they are working and schooling from home. A new lesson plan is posted on their Facebook page every afternoon.

Nevada Gold Mines, a joint venture between **Barrick** and **Newmont Corporation**, is working with the state of Nevada and its stakeholders to identify immediate needs and provide financial and logistical support to mitigate the impact of the COVID-19 pandemic on its local communities.

Newmont Corporation has established a $20 million fund to help communities, governments and employees combat the COVID-19 pandemic. The Newmont Global Community Support Fund builds upon other local contributions and efforts the Company has implemented over the last month. Newmont will partner with local governments, medical institutions, charities and non-governmental organizations to target funds towards addressing the greatest needs with a view to serving as a catalyst for long-term resiliency and future community development.

Peabody believes that not only its products, but its people, are key to a better business and a better society. In line with this belief, the company is actively supporting the communities in which it works and has donated personal protective equipment to local healthcare providers.

Rio Tinto is supporting impacted communities in the U.S. and around the world. Its support has ranged from monetary to the donation of personal protective equipment, including the donation of safety masks and glasses to those on the front lines of efforts to combat this epidemic.

Twin Metals Minnesota is supporting local organizations and nonprofits to aid with COVID-19 relief efforts. Contributions have included: $10,000 to United Way of Northeast Minnesota; $5,000 to the Ely Food Shelf; $1,500 to Ruby's Pantry in Babbitt to distribute food gift cards; and $5,000 to the Babbitt Ambulance to help fund critical items that are needed and in anticipation of increased calls.

Usibelli Coal Mine is offering a range of support to its local communities, donating N95 masks to Fairbanks hospital, eye protection to the Tri-Valley Volunteer Fire Department, delivering meals to senior citizens, and providing meals for both health care workers and volunteers.

ED_014208_00000051-00002

American mining should be the foundation for our economic recovery

BY RICH NOLAN, PRESIDENT AND CEO, NATIONAL MINING ASSOCIATION

The following opinion piece appeared in newspapers across the country - including The Greeley Tribune, Montana Standard and The Elko Daily - in April 2020.

On May 17, 1943, the men and women of the Bradley Mining Company in Stibnite, Idaho, received an unexpected telegram.

It came from Dwight D. Eisenhower, the Commander and Chief of Allied Forces in Africa. Following allied victory, he wrote to express his appreciation for the work done on the home front that kept his troops equipped, saying, "there is glory for us all in the achievement."

The men and women of Bradley Mining produced the tungsten and antimony used to harden Allied armor and munitions. So important was the discovery of tungsten at Stibnite in 1942, and the mining effort that followed, that the U.S. Munitions Board estimated it "shortened World War II by at least one year and saved the lives of a million American soldiers."

The U.S. once again finds itself in an all-out battle. The enemy is different, but the mining industry is ready to do its part to make sure we not only win but come out stronger.

As an essential U.S. industry, mining continues to produce the materials that are the building blocks of American life—and that the American people rely on, including the nation's medical and healthcare sectors.

Antimicrobial metals like copper, silver, gold and zinc are found in every hospital room and in much of the equipment and medicines that help the nation's doctors and nurses save lives.

As a recent study from researchers at the National Institutes of Health concluded, while the coronavirus can live for days on hard surfaces like plastic or glass, copper's passive antimicrobial properties begin killing the virus almost immediately. Within four hours of contact, virus levels are undetectable.

Mining and mined materials are playing a vital role in helping the nation weather this storm, but it will be after the crisis that the nation's miners can provide the foundation for our recovery.

With the unprecedented economic toll already wrought by the virus, and the measures taken to combat it, policymakers are exploring additional rounds of policy changes to jumpstart the economy. An infrastructure package appears to be on the horizon — and is the perfect place for mining to contribute.

Rebuilding and modernizing our critical infrastructure — everything from our roads and bridges to our water treatment systems and airports — will require an immense amount of material and the industrial base to provide it.

If we are to make the most of an infrastructure package, it should include efforts to re-shore our industrial supply chains and to make sure we are rebuilding and modernizing when possible with American-made materials, equipment, and jobs. If done correctly, rebuilding our infrastructure can happen in parallel to reenergizing our industrial base — in the face of troubling vulnerabilities.

Now is the moment to commit to increasing the competitiveness of existing industries and reestablishing pieces of our supply chains that have disappeared altogether. The mining industry — the front end of our industrial base — exemplifies this opportunity and the need for action.

ED_014208_00000052-00001

The U.S. possesses vast domestic mineral reserves, but mineral import reliance has grown to alarming levels. In 1990, 20 percent of all global mining investment flowed into the U.S.

Today, it's only 8 percent. The U.S. is now 50 percent or more import-reliant for nearly 50 vital minerals and metals, and 100 percent import-reliant for 18 of them.

We shouldn't wait a moment longer to reverse this trend.

America's industrial base, led by American mining, was once the envy of the world. It built our cities and infrastructure, and helped see us through the greatest conflicts of the 20th century.

With foresight and smart policy, it can help see us through this challenge and be the foundation upon which we launch our recovery.

— *Rich Nolan is president and chief executive officer of the National Mining Association*

Message

From: Broome, Shannon S. [SBroome@hunton.com]
Sent: 7/25/2020 9:27:36 PM
To: Wheeler, Andrew [wheeler.andrew@epa.gov]
CC: Bodine, Susan [bodine.susan@epa.gov]; Idsal, Anne [idsal.anne@epa.gov]; Leopold, Matt (OGC) [Leopold.Matt@epa.gov]; Gunasekara, Mandy [gunasekara.Mandy@epa.gov]; Irving, John [Irving.John@epa.gov]; Jordan, Scott [Jordan.Scott@epa.gov]; Tsirigotis, Peter [Tsirigotis.Peter@epa.gov]; DawnBlancaflor@packagingcorp.com; Knauss, Chuck [CKnauss@hunton.com]; Ellis, Clare [CEllis@hunton.com]
Subject: ATTACHMENT 1 - Petition for Reconsideration Pulp and Paper NESHAP, 40 CFR Part 63
Attachments: Attachment 1 - 1998-04-15 - 63 FR 18504 NESHAP re Pulp and Paper Production-Final Rule.pdf

Dear Administrator Wheeler:

To follow up on my previous e-mail transmitting a Petition to Reconsider and/or Revise on behalf of the Packaging Corporation of America ("PCA"), the is the first of four e-mails transmitting the attachments to the Petition. Attached please find:

1. **Attachment 1:** *National Emission Standards for Hazardous Air Pollutants for Source Category: Pulp and Paper Production; Effluent Limitations Guidelines, Pretreatment Standards, and New Source Performance Standards: Pulp, Paper, and Paperboard Category; Final rule, 63 Fed. Reg. 18,504 (Apr. 15, 1998).*

Thank you.

Best Regards,

HUNTON ANDREWS KURTH

Shannon S. Broome
Partner/Office Managing Partner San Francisco
sbroome@HuntonAK.com
p 415.975.3718
202.955.1912
m 415.818.2275

bio | vCard |

Hunton Andrews Kurth LLP
50 California Street
Suite 1700
San Francisco, CA 94111

2200 Pennsylvania Avenue, NW
10th Floor
Washington, DC 20007
HuntonAK.com

This communication is confidential and is intended to be privileged pursuant to applicable law. If the reader of this message is not the intended recipient, please advise by return email immediately and then delete this message and all copies and backups thereof.

ATTACHMENT 1

ENVIRONMENTAL PROTECTION AGENCY

40 CFR Parts 63, 261, and 430

[FRL–5924–8]

RIN 2040–AB53

National Emission Standards for Hazardous Air Pollutants for Source Category: Pulp and Paper Production; Effluent Limitations Guidelines, Pretreatment Standards, and New Source Performance Standards: Pulp, Paper, and Paperboard Category

AGENCY: Environmental Protection Agency (EPA).

ACTION: Final rules.

SUMMARY: This action promulgates effluent limitations guidelines and standards under the Clean Water Act (CWA) for a portion of the pulp, paper, and paperboard industry, and national emission standards for hazardous air pollutants (NESHAP) under the Clean Air Act (CAA) as amended in 1990 for the pulp and paper production source category.

EPA is also promulgating best management practices under the CWA for a portion of the pulp, paper, and paperboard industry, and new analytical methods for 12 chlorinated phenolic pollutants and for adsorbable organic halides (AOX). This action consolidates into 12 subcategories what had once been 26 subcategories of effluent limitations guidelines and standards for the pulp, paper, and paperboard industry, and revises the existing effluent limitations guidelines and standards for the Bleached Papergrade Kraft and Soda subcategory and the Papergrade Sulfite subcategory. The revised effluent limitations guidelines and standards require existing and new facilities within these two subcategories to limit the discharge of pollutants into navigable waters of the United States and to limit the introduction of pollutants into publicly owned treatment works. The NESHAP requires existing and new major sources within the pulp and paper production source category to control emissions using the maximum achievable control technology (MACT) to control hazardous air pollutants (HAP).

EPA is revising the effluent limitations guidelines and standards for the Bleached Papergrade Kraft and Soda subcategory and the Papergrade Sulfite subcategory primarily to reduce the discharge of toxic and nonconventional chemical compounds found in the effluents from these mills. Discharge of these pollutants into the freshwater, estuarine, and marine ecosystems may alter aquatic habitats, affect aquatic life, and adversely impact human health. Discharges of chlorinated organic compounds from chlorine bleaching, particularly dioxins and furans, are human carcinogens and human system toxicants and are extremely toxic to aquatic life. The final effluent limitations guidelines and standards for the Bleached Papergrade Kraft and Soda and Papergrade Sulfite subcategory are estimated to reduce the discharge of adsorbable organic halides (AOX) by 28,210 kkg/year; chloroform by 45 kkg/year; chlorinated phenolics by 47 kkg/year; and 2,3,7,8-TCDD (dioxin) and 2,3,7,8-TCDF (furan) by 125 gm/year. These reductions will permit all 19 dioxin/furan-related fish consumption advisories downstream of pulp and paper mills to be lifted.

EPA is revising the subcategorization scheme for the effluent limitations guidelines and standards because the new scheme better defines the processes typically found in U.S. mills and thus results in what ultimately will be a streamlined regulation that can be implemented more easily by the permit writer. With the exception of the new effluent limitations guidelines and standards for the Bleached Papergrade Kraft and Soda and Papergrade Sulfite subcategories, EPA is making no substantive changes to the limitations and standards applicable to the newly reorganized subcategories. Those portions of the existing pulp, paper, and paperboard effluent limitations guidelines and standards that are not substantively amended by this action are not subject to judicial review; nor is their effective date affected by this reorganization.

The HAPs emitted by facilities covered by the NESHAP include such compounds as methanol, chlorinated compounds, formaldehyde, benzene, and xylene. The health effects of exposure to these and other HAPs at pulp and paper mills can include cancer, respiratory irritation, and damage to the nervous system. The final NESHAP is expected to reduce baseline emissions of HAP by 65 percent or 139,000 Mg/yr.

The pollutant reductions resulting from these rules will achieve the primary goals of both the CAA and CWA, which are to "enhance the quality of the Nation's air resources so as to promote the public health and welfare and productive capacity of its population" and to "restore and maintain the chemical, physical, and biological integrity of the Nation's waters," respectively. These rules will result in continued environmental improvement at reasonable cost by providing flexibility in when and how results are achieved and, for certain mills, by providing incentives to surpass baseline requirements.

Elsewhere in today's **Federal Register,** EPA is concurrently proposing NESHAP to control hazardous air pollutants from chemical recovery combustion sources at kraft, soda, sulfite, and stand-alone semi-chemical pulp mills.

In another proposed rule published in today's **Federal Register,** EPA is also proposing a regulation that would require mills enrolled in the Voluntary Advanced Technology Incentives Program being promulgated for the Bleached Papergrade Kraft and Soda subcategory to submit a plan specifying research, construction, and other activities leading to achievement of the Voluntary Advanced Technology effluent limitations, with accompanying dates for achieving these milestones. Second, EPA proposes to authorize Bleached Papergrade Kraft and Soda subcategory mills under certain circumstances to submit a certification based on process changes in lieu of monitoring for chloroform. Third, although not proposing totally chlorine-free (TCF) technologies for new source performance standards under the CWA for Bleached Papergrade Kraft and Soda subcategory at this time, EPA is requesting comments and data regarding the feasibility of TCF processes for this subcategory, especially the range of products made and their specifications. In that proposal EPA is also requesting comments and data regarding the effluent reduction performance of TCF processes for this subcategory.

DATES: In accordance with the Small Business Regulatory Enforcement Fairness Act of 1996, the regulations shall become effective June 15, 1998. For compliance dates, see the **SUPPLEMENTARY INFORMATION** section under the heading "Compliance Dates."

ADDRESSES: *Air Dockets.* The Air Dockets are available for public inspection between 8 a.m. and 4 p.m., Monday through Friday except for Federal holidays, at the following address: U.S. Environmental Protection Agency, Air and Radiation Docket and Information Center (MC–6102), 401 M Street SW, Washington, DC 20460, Room M–1500, Waterside Mall; telephone: (202) 260–7548.

Water Docket. The complete public record for the effluent limitations guidelines and standards rulemaking is available for review, Monday through Friday except for federal holidays, at EPA's Water Docket, Room M2616, 401

M Street SW, Washington, DC 20460. For access to Docket materials, call (202) 260–3027. The Docket staff requests that interested parties call between 9:00 am and 3:30 pm for an appointment before visiting the docket.

For additional information about the dockets, see section X.A below.

Background and support documents containing technical, cost, economic, and health information, as well as EPA's response to public comments, are available for public use. A listing and how to obtain these background documents is provided in section XI in this notice.

FOR FURTHER INFORMATION CONTACT: For questions regarding air emissions standards for chemical wood pulping mills, contact Ms. Penny Lassiter, Emissions Standards Division (MD–13), U.S. Environmental Protection Agency, Research Triangle Park, NC 27711, telephone number (919) 541–5396; or Mr. Stephen Shedd, at the same address, telephone number (919) 541–5397. For information concerning the final air standards for mechanical pulping processes, secondary fiber pulping processes, and nonwood fiber pulping processes, contact Ms. Elaine Manning, at the same Research Triangle Park address, telephone number (919) 541–5499. For questions on compliance, enforcement and applicability determinations, contact Ms. Maria Eisemann, Office of Enforcement and Compliance Assurance (2223A), U.S. Environmental Protection Agency, 401 M St., S.W., Washington, D.C. 20460, telephone number (202) 564–7106.

For questions regarding wastewater standards, contact Mr. Donald Anderson at the following address: Engineering and Analysis Division (4303), EPA, 401 M Street, S.W., Washington, D.C. 20460, telephone number (202) 260–7189; or Ms. Wendy D. Smith at the same address, telephone number (202) 260–7184.

For additional information on the economic impact analyses, contact Dr. William Wheeler, Office of Water, Engineering and Analysis Division (4303), U.S. Environmental Protection Agency, 401 M Street, SW, Washington, DC, 20460, (202) 260–7905.

SUPPLEMENTARY INFORMATION:

Overview

The preamble summarizes the legal authority for these rules, background information, the technical and economic methodologies used by the Agency to develop these rules, the impacts of the rules, regulatory implementation, and the availability of supporting documents.

Regulated Entities

Entities regulated by today's action are those operations that chemically pulp and nonchemically pulp wood and nonwood fibers for pulp and paper production. EPA projects that approximately 490 mills are subject to the air regulations promulgated today. Of these mills, 155 will be affected by MACT standards for mills that chemically pulp wood. Within that group, 96 are subject to the effluent limitations guidelines and standards promulgated today. Regulated categories and entities include:

Category	Rule	Examples of regulated entities
Industry	NESHAP	Pulp mills and integrated mills (mills that manufacture pulp and paper/paperboard) that: chemically pulp wood fiber (using kraft, sulfite, soda, or semi-chemical methods); pulp secondary fiber; pulp nonwood fiber; and mechanically pulp wood fiber.
	Effluent Guidelines	Subset of mills subject to the NESHAP that chemically pulp wood fiber using kraft, sulfite, or soda methods to produce bleached papergrade pulp and/or bleached paper/paperboard.

The foregoing table is not intended to be exhaustive, but rather provides a guide for readers regarding entities likely to be regulated by the NESHAP and effluent limitations guidelines and standards promulgated today. This table lists the types of entities that EPA is now aware could potentially be regulated by this action. Other types of entities not listed in the table could also be regulated. To determine whether your facility or company is regulated by this NESHAP, you should carefully examine the applicability criteria in § 63.440 of the air rule and the applicability criteria in part 63, Subpart A of Title 40 of the Code of Federal Regulations. To determine whether your facility is regulated by the effluent limitations guidelines and standards, you should carefully examine the applicability criteria in § 430.20 and § 430.50 of Title 40 of the Code of Federal Regulations.

If you have questions regarding the applicability of the NESHAP or the effluent limitations guidelines and standards, see the section entitled **FOR FURTHER INFORMATION CONTACT.**

Judicial Review

In accordance with 40 CFR § 23.2, the water portion of today's rule shall be considered promulgated for the purposes of judicial review at 1 pm Eastern time on April 29, 1998. Under section 509(b)(1) of the Clean Water Act (CWA), judicial review of today's effluent limitations guidelines and standards is available in the United States Court of Appeals by filing a petition for review within 120 days from the date of promulgation of those guidelines and standards. Under section 307(b)(1) of the CAA, judicial review of the NESHAP is available only by petition for review in the U.S. Court of Appeals for the District of Columbia Circuit within 60 days of today's publication of this NESHAP. Under section 509(b)(2) of the CWA and section 307(b)(2) of the CAA, the requirements in this regulation may not be challenged later in civil or criminal proceedings brought by EPA to enforce these requirements.

Compliance Dates

Existing direct dischargers must comply with limitations based on the best available technology economically achievable (BAT) as soon as such requirements are imposed in their National Pollutant Discharge Elimination System (NPDES) permits. The water regulation also establishes specific deadlines for compliance with best management practices (BMPs), which apply to all sources. The new reporting and recordkeeping requirements promulgated today are not effective until the Office of Management and Budget approves Information Collection Requests for those requirements.

Except as provided in today's BMP regulation, existing indirect dischargers subject to today's water regulations must comply with the pretreatment standards for existing sources being promulgated today by April 16, 2001. In addition, these dischargers must continue to comply with the pretreatment standards for existing sources for pentachlorophenol and trichlorophenol.

Except as provided in today's BMP regulation, new direct and indirect discharging sources must comply with applicable treatment standards on the date the new source begins operation. For purposes of new source performance standards (NSPS), a source is a new source if it meets the definition of "new source" in 40 CFR 430.01(j) and if it commences construction after June 15, 1998. For purposes of pretreatment standards for new sources (PSNS), a source is a new source if it meets the definition of "new source" in 40 CFR 430.01(j) and if it commenced construction after December 17, 1993.

The following compliance dates apply to the Voluntary Advanced Technology Incentives Program being codified today as part of the water regulations for Subpart B. Each existing direct discharging mill that enrolls in the Voluntary Advanced Technology Incentives Program must comply immediately with limitations based on the mill's existing effluent quality or its current technology-based permit limits for the baseline BAT parameters, whichever are more stringent. Participating mills must also comply with mill-specific interim milestones by the dates specified in their NPDES permits. They must also achieve the baseline BAT effluent limitations for dioxin, furan, chloroform, 12 specified chlorinated organic pollutants and, for mills enrolled at the Tier II or Tier III level, AOX no later than April 15, 2004. Finally, participating mills must achieve BAT limitations corresponding to the most stringent phase of the Voluntary Advanced Technology Incentives Program by the dates specified below:

Voluntary BAT limitations for Tier I must be achieved by April 15, 2004.

Voluntary BAT limitations for Tier II must be achieved by April 15, 2009.

Voluntary BAT limitations for Tier III must be achieved by April 15, 2014.

For new direct discharging mills in Subpart B, EPA is promulgating Voluntary NSPS at the Tier II and Tier III levels. Participating new sources must achieve NSPS at the selected level upon commencing operation.

Compliance dates for the NESHAP are as follows: Existing sources must comply with the NESHAP no later than April 16, 2001 except for the following cases. Equipment in the high volume low concentration (HVLC) system at existing sources at kraft mills (e.g., pulp washer systems, oxygen delignification systems) must comply no later than April 17, 2006. Bleach plants at existing source kraft and soda mills participating in the effluent limitations guidelines Voluntary Advanced Technology Incentives Program must comply with the first stage of the NESHAP no later June 15, 1998 and with the second stage no later than April 15, 2004.

Once today's rules take effect on June 15, 1998, new sources must comply with applicable MACT requirements upon start-up. For a discussion of the circumstances under which a source becomes a new source for compliance with new source air emissions standards, see Sections II.B.2.b. and VI.A.1.

Technology Transfer Network

The Technology Transfer Network (TTN) is one of EPA's electronic bulletin boards. The TTN provides information and technology exchange in various areas of air pollution control. New air regulations are now being posted on the TTN through the world wide web at "http://www.epa.gov/ttn." For more information on the TTN, call the HELP line at (919) 591–5384.

Information on the water regulations may be accessed through the world wide web at http://www.epa.gov/OST/Rules/#final.

Organization of This Document

I. Legal Authority
II. Scope of This Rulemaking
A. EPA's Long-Term Environmental Goals
B. National Emission Standards for Hazardous Air Pollutants (NESHAP)
C. Effluent Limitations Guidelines and Standards
III. Background
A. Prior Regulations, Proposal, Notices of Data Availability, and Public Participation
B. Clean Air Act Statutory Authority
C. Clean Water Act Statutory Authority
D. Other EPA Activities Concerning the Pulp and Paper Industry
IV. Changes in the Industry Since Proposal
V. Summary of Data Gathering Activities Since Proposal
A. Data Gathering for the Development of Air Emissions Standards
B. Data Gathering for the Development of Effluent Limitations Guidelines and Standards
VI. Summary of the Major Changes Since Proposal and Rationale for the Selection of the Final Regulations
A. Air Emission Standards
B. Effluent Limitations Guidelines and Standards
VII. Environmental Impacts
A. Summary of Sources and Level of Control
B. Air Emissions and Water Effluent Reductions
C. Non-Water Quality Environmental Impacts of Effluent Limitations Guidelines and Standards (BAT, PSES, and BMPs)
D. Non-Water Quality Environmental Impacts of New Source Performance Standards and Pretreatment Standards for New Source (NSPS and PSNS)
VIII. Analysis of Costs, Economic Impacts, and Benefits
A. Summary of Costs and Economic Impacts
B. Overview of Economic Analysis
C. Costs and Economic Impacts for Air Emissions Standards
D. Costs and Economic Impacts for Effluent Limitations Guidelines and Standards
E. Costs and Impacts for the Integrated Rule
F. Costs and Impacts of Rejected BAT/PSES Options for the Bleached Papergrade Kraft and Soda Subcategory
G. Benefits
H. Comparison of Costs and Benefits
I. Costs and Benefits of Rejected Options for the Bleached Papergrade Kraft and Soda Subcategory—Option B and TCF
J. Benefit-Cost Comparison Using Case Studies
IX. Incentives for Further Environmental Improvements
A. The Voluntary Advances Technology Incentives Program
B. Incentives Available After Achievement of Advanced Technology BAT Limitations and NSPS
X. Administrative Requirements and Related Government Acts or Initiatives
A. Dockets
B. Executive Order 12866 and OMB Review
C. Regulatory Flexibility Act and the Small Business Regulatory Enforcement Fairness Act of 1996 (SBREFA)
D. Paperwork Reduction Act
E. Unfunded Mandates Reform Act
F. Pollution Prevention Act
G. Common Sense Initiative
H. Executive Order 12875
I. Executive Order 12898
J. Submission to Congress and the General Accounting Office
K. National Technology Transfer and Advancement Act
XI. Background Documents

I. Legal Authority

These regulations are being promulgated under the authority of sections 301, 304, 306, 307, 308, 402, and 501 of the Clean Water Act, 33 U.S.C. sections 1311, 1314, 1316, 1317, 1318, 1342, and 1361, and sections 112, 114, and 301 of the Clean Air Act, 42 U.S.C. sections 7412, 7414, and 7601.

II. Scope of This Rulemaking

Today's Cluster Rules consist of effluent limitations guidelines and standards for the control of wastewater pollutants and national emission standards for hazardous air pollutants. The final rules issued today are based on extensive information gathered by the Agency and on comments received from interested parties during the development of these regulations.

Section VI of this notice discusses the major changes since proposal and the rationale for the regulatory decisions

underlying the rules promulgated today. This summary section highlights the technology bases and other key aspects of the final rules. More detailed descriptions are included in the supporting documents listed in section XI.

In addition, the Agency is today codifying the subcategorization scheme that was proposed for 40 CFR parts 430 and 431, see 58 FR 66078, 66098–100 (Dec. 17, 1993) and is redesignating the section and subpart numbers in 40 CFR part 430 accordingly.

A. EPA's Long-Term Environmental Goals

EPA has integrated the development of the regulations discussed today to provide greater protection of human health and the environment, reduce the cost of complying with the wastewater regulations and air emissions controls, promote and facilitate coordinated compliance planning by industry, promote and facilitate pollution prevention, and emphasize the multimedia nature of pollution control.

The Agency envisions a long-term approach to environmental improvement that is consistent with sound capital expenditures. This approach, which is presented in today's notice, stems from extensive discussions with a range of stakeholders. The effluent limitations guidelines and standards and air emissions standards are only one component of the framework to achieve long-term environmental goals. The overall regulatory framework also includes incentives to reward and encourage mills that implement pollution prevention beyond regulatory requirements. The Agency will continue to encourage mill-specific solutions to remaining environmental problems through water quality-based requirements in permits and enforcement of those requirements. In addition, continuing research on minimum impact technologies, such as closed-loop and totally chlorine-free bleaching processes, will help to identify economical ways of furthering environmental improvement in this industry.

EPA's long-term goals include improved air quality, improved water quality, the elimination of fish consumption advisories downstream of mills, and the elimination of ecologically significant bioaccumulation. An integral part of these goals is an industry committed to continuous environmental improvement—an industry that aggressively pursues research and pilot projects to identify technologies that will reduce, and ultimately eliminate, pollutant discharges from existing and new sources. A holistic approach to implementing these pollution prevention technologies would contribute to the long-term goal of minimizing impacts of mills in all environmental media by moving mills toward closed-loop process operations. Effective implementation of these technologies is capable of increasing reuse of recoverable materials and energy while concurrently reducing consumption of raw materials (e.g., process water, unrecoverable chemicals, etc.), and reducing air emissions and generation of hazardous and non-hazardous wastes. EPA expects that this combination of regulation, research, pilot projects, and incentives will foster continuous environmental improvement with each mill investment cycle. For this reason, EPA is including an incentives program as part of the effluent limitations guidelines and standards being promulgated today for bleached papergrade kraft and soda mills that accept enforceable permit limits requiring effluent reductions well beyond the rule's regulatory baseline (see Section IX). To ensure that today's air emission standards do not present barriers or disincentives to mills in choosing technologies beyond baseline BAT, EPA is providing additional time to comply with MACT beyond the three-year compliance time for certain process units. See Sections VI.A.3.b and VI.A.7 for details on MACT compliance times.

B. National Emission Standards for Hazardous Air Pollutants (NESHAP)

1. Purpose of the NESHAP

The main purposes of the Clean Air Act (CAA) are to protect and enhance the quality of our Nation's air resources, and to promote the public health and welfare and the productive capacity of the population. See CAA, section 101(b)(1). To this end, section 112(d) of the CAA directs EPA to set standards for stationary sources emitting greater than ten tons of any one HAP or 25 tons of total HAPs annually (one ton is equal to 0.908 megagrams). EPA is promulgating this NESHAP because pulp and paper mills are major sources of HAP emissions. Individual mills are capable of emitting as much as several hundred tons per year (tpy) of HAPs. The HAPs emitted may adversely affect air quality and public health. The HAPs controlled by this rule are associated with a variety of adverse health effects including cancer; a number of other toxic health effects such as headaches, nausea, and respiratory distress; and possible reproductive effects.

a. Hazardous Air Pollutants. Table II–1 lists the 14 HAPs emitted in the largest quantities from pulp and paper mills. A few HAPs emitted from pulp and paper mills have been classified as possible, probable, or known human carcinogens. These include acetaldehyde, benzene, carbon tetrachloride, chloroform, formaldehyde, and methylene chloride. The total reduction in national HAP emissions by compliance with the NESHAP is estimated to be 139,000 megagrams per year (Mg/yr).

TABLE II–1.—HIGHEST EMITTED HAZARDOUS AIR POLLUTANTS FROM PULP AND PAPER MILLS

Hazardous Air Pollutants	
Acrolein	Methanol.
Acetaldehyde	Methylene chloride.
o-Cresol	Methyl ethyl ketone.
Carbon tetrachloride	Phenol.
Chloroform	Propionaldehyde.
Cumene	1,2,4-Trichlorobenzene.
Formaldehyde	o-Xylene.

b. Volatile Organic Compounds. Emissions of volatile organic compounds (VOC) have been associated with a variety of health and welfare impacts. Volatile organic compound emissions, together with nitrogen oxides (NO_X), are precursors to the formation of tropospheric ozone. Exposure to ozone is responsible for a series of health impacts, such as alterations in lung capacity; eye, nose, and throat irritation; malaise and nausea; and aggravation of existing respiratory disease. Among the welfare impacts from exposure to ozone include damage to selected commercial timber species and economic losses for commercially valuable crops, such as soybeans and cotton. The total reduction in national VOC emissions by compliance with the NESHAP is estimated to be 409,000 Mg/yr.

c. Total Reduced Sulfur Compounds. Total reduced sulfur (TRS) compound emissions are responsible for the malodors often associated with pulp and paper production. The total reduction in TRS compound emissions estimated as a result of compliance with this NESHAP is 79,000 Mg/yr. Surveys of odor pollution caused by pulp mills have supported a link between odor and health symptoms such as headaches, watery eyes, nasal problems, and breathing difficulties.

2. Summary of the NESHAP

The MACT standards apply to pulp and paper mills that have the potential to emit ten tons per year of any one HAP

or 25 tons per year of all HAPs (one ton is equal to 0.908 megagrams). Potential to emit is based on the total of all HAP emissions from all activities at the mill.

The NESHAP specifies emission standards for pulping processes and bleaching processes. The emission standards for pulping and bleaching processes provide several options for compliance, including an alternative pollution prevention option (the "clean condensate alternative") for the kraft pulping process. The standards specify compliance dates for new and existing sources, require control devices to be properly operated and maintained at all times, and clarify the applicability of the NESHAP General Provisions (40 CFR part 63, subpart A) to sources subject to this rule.

The rule subcategorizes the industry to specify different emission standards based on the type of pulping process (kraft, sulfite, semi-chemical, soda, mechanical wood pulping, secondary fiber pulping, or non-wood pulping) and bleaching process (papergrade or dissolving grade). Mills that chemically pulp wood using kraft, semi-chemical, sulfite, or soda processes are referred to in later sections as MACT I mills. Mills that mechanically pulp wood, or that pulp secondary fiber or non-wood fibers, or that produce paper or paperboard from purchased pulp are referred to in later sections as MACT III mills.

The emission control requirements for new and existing sources within each subcategory are the same, except that more emission points are covered for sources subject to the new source provisions. Where two or more subcategories are located at the same mill site and share a piece of equipment, that piece of equipment would be considered a part of the subcategory with the more stringent MACT requirements for that piece of equipment. For example, the foul condensates from an evaporation set processing both kraft weak black liquor and spent liquor from a semi-chemical process would have to comply with the kraft subcategory requirements for foul condensate. This more stringent requirement is appropriate because there is no way to isolate the emissions for each pulping source to determine compliance separately.

These standards do not address emissions from recovery area combustion sources (referred to in later sections as MACT II). These sources are being regulated under a separate NESHAP, which is proposed elsewhere in today's **Federal Register**. A summary of the specific provisions that apply to each of the subcategories is given in the later parts of this section.

a. Definition of Affected Source. At chemical wood pulping mills, the affected source is all emission points in the pulping and bleaching systems. At mills that mechanically pulp wood, secondary fibers, or non-wood materials, the affected source is all emission points in the bleaching system. For kraft mills complying with the clean condensate alternative, the affected source is the pulping system, bleaching system, causticizing system, and papermaking system.

b. New Source MACT. New source MACT applies to: (1) An affected source that commenced construction or reconstruction after initial proposal; (2) pulping or bleaching systems that are reconstructed after initial proposal; and (3) new pulping systems, pulping lines, bleaching systems, and bleaching lines that are added to existing sources after initial proposal. The initial proposal date for mills that chemically pulp wood is December 17, 1993. The initial proposal date for mills that mechanically pulp wood, pulp secondary fibers, or pulp non-wood materials is March 8, 1996.

Descriptions of equipment in each subcategory subject to new source MACT requirements are presented in later sections of this preamble.

c. Compliance Times. The rule requires existing sources to comply with the NESHAP no later than April 16, 2001, except for the following cases. Existing kraft sources are required to control all the equipment in the HVLC collection system no later than April 17, 2006. Dissolving-grade mills are required to comply with bleaching system standards no later than three years after publication of the wastewater effluent limitations guidelines and standards under 40 CFR part 430, subparts A and D.

In addition, the NESHAP sets out a two-phased standard for existing source papergrade kraft and soda bleach mills that elect, under the Voluntary Advanced Technology Incentives Program, to control wastewater discharges to levels surpassing today's BAT baseline. The first phase for existing source MACT requires no increase in the existing HAP emission levels from the papergrade bleaching system—i.e., no backsliding—during the initial period when the mill is working toward meeting its Voluntary Advanced Technology BAT requirements. EPA has determined that immediate compliance with this requirement is practicable because the requirement reflects, for each mill, the performance level it is presently achieving. Therefore, the effective date of the first phase requirements is June 15, 1998. The second phase of existing source MACT requires the mill either to comply with BAT for all pollutant parameters at the baseline level for the Bleached Papergrade Kraft and Soda subcategory, or to certify that chlorine and hypochlorite are not used in the bleach plant, in order to achieve the MACT standard for chloroform emission reduction; it also requires the mill to apply controls for other chlorinated HAPs. All such mills that enroll in the Voluntary Advanced Technology Incentives Program must comply with the second phase of existing source MACT no later than April 15, 2004.

Once today's rules take effect on June 15, 1998, new sources must comply with applicable MACT requirements upon start-up.

d. Kraft Pulping Standards. For existing sources, the kraft pulping standards promulgated today apply to the following equipment systems: The low volume high concentration (LVHC) system, the pulp washing system, the oxygen delignification system, decker systems that do not use fresh water or whitewater from papermaking systems or that use process water with HAP concentrations greater than or equal to 400 parts per million by weight (ppmw), and knotter systems and screening systems that have total system emissions greater than or equal to 0.05 and 0.10 kilograms of HAP per megagram of oven-dried pulp (ODP) produced, respectively (or have total [i.e., knotter and screening] system emissions greater than or equal to 0.15 kilograms of HAP per megagram of ODP produced combined). For new sources, the kraft pulping standards apply to the equipment systems listed above for existing sources, plus weak liquor storage tanks, all knotter systems, all screening systems, and all decker systems.

Sources subject to the kraft pulping standards must enclose open process equipment and route all emissions through a closed-vent system to a control device. The closed-vent system must be designed and operated with no detectable leaks. The rule provides three control device options, as follows: (1) Reduce the HAP content by 98 percent by weight (or, for thermal oxidizers, to a level of 20 parts per million volume [ppmv] of total HAP, corrected to 10 percent oxygen on a dry basis); (2) reduce HAPs by using a properly operated design thermal oxidizer (operated at a minimum temperature of 1,600 °F and a minimum residence time of 0.75 seconds); or (3) reduce HAPs by using a boiler, lime kiln, or recovery

furnace that introduces all emission streams to be controlled with the primary fuel or into the flame zone.

The kraft condensate standards apply to condensate streams generated in the following kraft pulping processes: Digester system, evaporator system, turpentine recovery system, LVHC collection system, and the high volume-low concentration (HVLC) collection system. The HAP mass loading in the condensates from these systems must be reduced by 92 percent, based upon performance of steam stripping. The NESHAP also includes the following four alternative ways to meet the kraft condensate standard: (1) Recycle applicable condensate streams to process equipment that is controlled in accordance with the kraft pulping standards; (2) reduce the concentration of HAP (measured as methanol) in the condensate to 330 ppmw for kraft mills with bleaching systems, or 210 ppmw for kraft mills without bleaching systems; (3) remove at least 5.1 kilograms of HAP (measured as methanol) per megagram of ODP produced for kraft mills with bleaching systems, or remove at least 3.3 kilogram of HAP per megagram of ODP produced for kraft mills without bleaching systems; or (4) discharge pulping process condensates to a biological treatment system achieving at least 92 percent destruction of total HAP.

The pulping process condensates must be conveyed to the treatment system in a closed collection system that is designed and operated to meet the individual drain system requirements specified in §§ 63.960, 63.961, 63.962, and 63.964 of subpart RR. These essentially require that the means of conveyance be leak-free. Air emissions of HAP from vents on any condensate treatment systems (except biological treatment systems) that are used to comply with the standards must be routed to a control device meeting the kraft pulping standards.

All the pulping process condensates from the LVHC and HVLC collection systems must be treated. However, the facility has the option of minimizing the condensate volume sent to treatment from the digester system, turpentine recovery system, and weak liquor feed stages in the evaporator system (i.e., condensate segregation). If sufficient segregation is not achieved, then the entire volume of condensate from the digester system, turpentine recovery system, and weak liquor feed stages in the evaporator system and the LVHC and HVLC collection systems must be treated.

Two options are provided in the rule for determining if sufficient segregation has been achieved. The first option is to isolate at least 65 percent of the total HAP mass in the total of all condensates from the digester system, turpentine recovery system, and weak liquor feed stages in the evaporator system.

The second option requires that a minimum total HAP mass from the high HAP-concentrated condensates from the digester system, turpentine recovery system, and weak liquor feed stages in the evaporator system and the LVHC and HVLC collection system condensates be sent to treatment.

e. Clean Condensate Alternative Standards for Kraft Pulping. The final rule provides an alternative compliance option to the kraft pulping standards for subject equipment in the HVLC systems. This alternative compliance option is referred to as the clean condensate alternative (CCA). The CCA focuses on reducing the HAP concentration in process water (such as from the digestion and liquor evaporation areas) that is introduced into process equipment throughout the mill. By reducing the amount of HAP in the process water, reductions in HAP emissions will also be achieved since less HAP will be available to volatilize off the process to the atmosphere. To demonstrate compliance, the mass emission reduction of HAPs achieved by the alternative technology must equal or exceed that which would have been achieved by implementing the kraft pulping vent controls.

Eligibility for this compliance alternative is determined on a case-by-case basis during the permitting process.

For purposes of developing a compliance strategy, sources may use either emission test data or engineering assessment to determine the baseline HAP emission reductions that would be achieved by complying with the kraft pulping vent standard. To demonstrate that the alternative technology complies with the emission reduction requirements of the standards, emission test data must be used. Two conditions must be met for a CCA compliance demonstration: (1) Owners and operators that choose this alternative must first comply with pulping process condensate standards before implementing the alternative technology; and (2) the HAP emission reductions cannot include reductions associated with any control equipment required by local, state, or Federal agencies' regulations or statutes or with emission reductions attributed to equipment installed prior to December 17, 1993 (i.e., the date of publication of the proposed rule).

For purposes of the CCA, the rule provides an alternative definition of the affected source. The alternative definition allows for the CCA to apply to process systems outside of the kraft pulping system. The expanded source includes the causticizing system and the papermaking system. The mill must specify the process equipment within the expanded source with which to generate the required HAP emissions reductions using the CCA. The mass emission reduction of HAPs must equal or exceed the reduction that would have been achieved through application of the kraft pulping vent standards. The final determination of equivalency shall be made by the permitting authority based on an evaluation of the HAP emission reductions.

f. Sulfite Pulping Standards. For existing sources, the sulfite pulping standards apply to the digester system vents, evaporator system vents, and the pulp washing system. The sulfite pulping standards also apply to air emissions from the effluent from any equipment used to reduce HAP emissions to comply with the standards (e.g., acid plant scrubber and nuisance scrubber). For new sources, the sulfite pulping standards apply to the equipment systems listed for existing sources, plus weak liquor tanks, strong liquor storage tanks, and acid condensate storage tanks.

Sources subject to the sulfite pulping standards for equipment systems must enclose open process equipment and route all HAP emissions through a closed-vent system to a control device. The closed-vent system must be designed and operated with no detectable leaks. The total HAP emissions from the equipment systems and from the effluent from any control device used to reduce HAP emissions must meet a mass emission limit or a percent reduction requirement. Calcium- and sodium-based sulfite pulping mills must meet an emission limit of 0.44 kilograms of methanol per megagram of ODP or achieve a 92 percent methanol reduction. Ammonium- and magnesium-based sulfite pulping mills must meet an emission limit of 1.1 kilograms of methanol per megagram of ODP limit or achieve an 87 percent methanol removal.

g. Semi-Chemical Pulping Standards. For existing sources, the semi-chemical pulping standards apply to the LVHC vent system. For new sources, semi-chemical pulping standards apply to the LVHC system and the pulp washing system.

Sources subject to the semi-chemical pulping standards must enclose open process equipment and route all emissions through a closed-vent system

to a control device. Positive-pressure portions of the closed-vent system must be designed and operated with no detectable leaks. The rule provides three control device options, as follows: (1) Reduce the HAP content by 98 percent by weight (or, for thermal oxidizers, to a level of 20 ppmv of total HAP, corrected to 10 percent oxygen on a dry basis); (2) reduce HAPs by using a properly operated thermal oxidizer (operated at a minimum temperature of 1,600 °F and a minimum residence time of 0.75 seconds); or (3) reduce HAPs by using a boiler, lime kiln, or recovery furnace that introduces all emission streams to be controlled with the primary fuel or into the flame zone.

h. Soda Pulping Standards. For existing sources, the soda pulping standards apply to the LVHC vent system. For new sources, the soda pulping standards apply to the LVHC system and the pulp washing system.

Sources subject to the soda pulping standards must enclose open process equipment and route all emissions through a closed-vent system to a control device. Positive pressure portions of the closed-vent system must be designed and operated with no detectable leaks. The rule provides three control device options, as follows: (1) Reduce the HAP content by 98 percent by weight (or, for thermal oxidizers, to a level of 20 ppmv of total HAP, corrected to 10 percent oxygen on a dry basis); (2) reduce HAPs by using a properly operated thermal oxidizer (operated at a minimum temperature of 1,600 °F and a minimum residence time of 0.75 seconds); or (3) reduce HAPs by using a boiler, lime kiln, or recovery furnace that introduces all emission streams to be controlled with the primary fuel or into the flame zone.

i. Bleaching System Standards. The bleaching provisions apply to bleaching systems that use elemental chlorine to bleach pulp. At kraft, sulfite, and soda pulping processes, the bleaching system provisions also apply to bleaching systems that use chlorinated compounds to bleach pulp. At mechanical pulping, non-wood fiber pulping, and secondary fiber pulping mills, only bleaching systems that use elemental chlorine or chlorine dioxide to bleach pulp are subject to the NESHAP. Bleaching systems that do not use chlorine or chlorinated compounds are considered to be in compliance with the bleaching system requirements. For the applicable systems (i.e., bleaching or brightening in the different subcategories), the chlorinated HAP emissions from bleaching systems that use elemental chlorine or chlorinated compounds must be controlled. Existing source and new source requirements are the same.

Sources subject to the bleaching system standards must enclose process equipment in the bleaching stages and route all emissions through a closed-vent system to a control device that achieves either a 99 percent reduction of chlorinated HAP's (other than chloroform), an outlet concentration at or below 10 ppmv total chlorinated HAP (other than chloroform), or a mass emission limit at or below 0.001 kg of total chlorinated HAP (other than chloroform) per Mg ODP produced. Chlorine may be used as a surrogate for measuring total chlorinated HAP. The closed-vent system must be designed and operated with no detectable leaks.

With respect to chloroform emissions from bleaching systems, EPA is closely correlating the air and water standards. This is because EPA is relying on the same process change technology basis to control both chloroform emissions to air and pollutant discharges to water. Thus, MACT to control chloroform for bleaching systems requires a mill either to meet the applicable baseline effluent limitations guidelines and standards for all pollutants being promulgated today under the Clean Water Act or to certify that chlorine and hypochlorite are not used in the bleaching system.

However, EPA at present lacks sufficient information to establish new effluent limitations guidelines and standards for dissolving grade mills, and also lacks information to reliably ascertain what a MACT standard for chloroform air emissions would be for this unit operation. (It is not appropriate to set MACT standards for chloroform based on the control technology in use today to comply with current effluent limitations guidelines and standards for dissolving grade mills because these technologies are at the wastewater treatment system, rather than in the bleaching process where the chloroform-emitting vents are located.) EPA intends to set new effluent limitations guidelines and standards for dissolving grade mills after analyses currently underway by EPA are complete, and is deferring establishing MACT standards for chloroform until these effluent limitations guidelines and standards are established. Therefore, dissolving grade mills will be required to control chloroform air emissions three years after the new effluent limitations guidelines and standards are promulgated.

In a related action, EPA is also deferring establishing MACT for chlorinated HAPs other than chloroform from dissolving grade bleaching operations until three years after promulgation of new effluent limitations guidelines and standards for mills performing those operations. The Agency is doing so in order to avoid imposition of CAA requirements which would be inconsistent with, or superseded by, forthcoming CWA regulations.

EPA is not aware of any control presently in place or any available control technology for reducing chloroform air emissions at mechanical, secondary fiber, and non-wood pulping mills. Therefore, MACT for chloroform at these mills is no control. Today's water rule does not set new effluent limitations guidelines and standards for control of chloroform at mechanical, secondary fiber, and non-wood pulping mills, but EPA will evaluate whether it is appropriate to do so at a later time. At that time, EPA will also determine whether it is appropriate to revise MACT (pursuant to CAA section 112(d)(6)) in order to control chloroform emissions at those mills.

In addition, EPA is establishing MACT in two phases for bleach plant emissions from existing source papergrade kraft and soda bleaching plants which elect, under the Voluntary Advanced Technology Incentives Program, to control wastewater discharges to levels surpassing the baseline BAT limitations being promulgated today under the CWA. Phase one represents the present MACT floor for existing sources, i.e., no backsliding from existing controls during the initial period when a mill is working toward meeting its Voluntary Advanced Technology BAT requirements; phase two requires the mill either to meet baseline BAT requirements for all pollutants for bleached papergrade kraft and soda mills or to certify that chlorine and hypochlorite are not used in the bleaching system. EPA is establishing MACT in two phases in order to avoid discouraging plants from electing environmentally superior levels of wastewater treatment represented by the Voluntary Advanced Technology Incentives Program. These points are discussed in detail in section VI.A.7.

j. Mechanical Pulping Mill, Secondary Fiber Pulping Mill, Non-wood Pulping Mill, and Papermaking System Standards. Mechanical pulping (groundwood, thermomechanical, pressurized) mills, secondary fiber pulping mills, and non-wood pulping mills must comply with the bleaching system standards described in section II.B.2.i. There are no control requirements for pulping systems or process condensates at these mills. For

papermaking systems, there are no control requirements.

k. Test Methods. The standards specify test methods and procedures for demonstrating that process equipment and condensate streams are in compliance with the MACT standards or are exempt from the rule. The rule also includes provisions to test for no detectable leaks from closed-vent systems. Because the majority of all non-chlorinated HAP emissions from process equipment and in pulping process condensates is methanol, in most cases the owner or operator has the option of measuring methanol as a surrogate for total HAP. For demonstrating compliance using biological treatment or the CCA, the owner or operator must measure total HAP. To demonstrate compliance with the concentration limit requirements, mass emission limit requirements, and percent reduction requirements for bleaching systems, chlorine may be measured as a surrogate for total chlorinated HAP emissions (other than chloroform).

l. Monitoring Provisions. Sources subject to the NESHAP are required to continuously monitor specific process or operating parameters for control devices and collection systems. Continuous emissions monitoring is not required, except as an alternative to certain control requirements. Parameter values are to be established during an initial performance test. Alternative monitoring parameters must be demonstrated to the Administrator's satisfaction to comply with the standards. As at proposal, excursions outside the selected parameter values are violations except for biological treatment systems. If a biological treatment system monitoring parameter is outside the established range, a performance test must be performed. The parameters that must be monitored for vent and condensate compliance are explained below.

Mills using a thermal oxidizer must install, calibrate, maintain, and operate a temperature monitoring device and continuous recorder to measure the temperature in the firebox or in the ductwork immediately downstream of the firebox before any substantial heat exchange occurs. Mills using gas scrubbers at bleaching systems or sulfite processes must install, calibrate, maintain, and operate a device to monitor and continuously record (1) pH or the oxidation/reduction potential of scrubber effluent, (2) vent gas inlet flow rate, and (3) scrubber liquid influent flow rate. As an alternative to monitoring these parameters, mills complying with the bleaching system outlet concentration option must install, calibrate, maintain, and operate a device to monitor and continuously record the chlorine outlet concentration. Mills complying with the bleaching system outlet mass emission limit option must install, calibrate, maintain, and operate a device to monitor and continuously record the chlorine outlet concentration and the scrubber outlet vent gas flow. Bleached papergrade kraft and soda mills enrolling in the Voluntary Advanced Technology Incentives Program in the effluent limitations guidelines and standards portion of today's rule must monitor the application rates of chlorine and hypochlorite to demonstrate that no increase in chlorine or hypochlorite use occurs between June 15, 1998 and April 15, 2004.

Mills using steam strippers must install, calibrate, maintain, and operate a device to monitor and continuously record process water feed rate, steam feed rate, and process water feed temperature. As an alternative to monitoring those parameters, mills complying with the steam stripper outlet concentration option may install, calibrate, maintain, and operate a device to monitor the methanol outlet concentration. In addition to monitoring around the stream stripper, mills that choose to treat a smaller, more concentrated volume of condensate rather than the whole volume of subject condensates must also continuously monitor the condensates to demonstrate that the minimum mass or percent of total mass is being treated. This practice is often referred to as condensate segregation. Mills complying with the condensate segregation requirements shall install, calibrate, maintain, and operate monitors for appropriate parameters as determined during the initial performance test.

Mills using a biological treatment system to treat pulping process condensates must monitor on a daily basis samples of outlet soluble BOD_5 concentration (maximum daily and monthly averages), inlet liquid flow, mixed liquor volatile suspended solids (MLVSS), liquid temperature, and the horsepower of aerator units. Additionally, inlet and outlet grab samples from each biological treatment system unit must be collected and stored for 5 days. These samples must be collected and stored since some of the monitoring parameters (e.g., soluble BOD_5) cannot be determined within a short period of time. These samples are to be used in conjunction with the WATER8 emissions model to demonstrate compliance if the soluble BOD_5, MLVSS, or the aerator horsepower monitoring parameters fall outside the range established during the initial performance test.

Monitoring requirements for the pulping process condensate collection systems include initial and monthly visual inspections of individual drain system components and vent control devices (if used), and repair of defects. Additionally, inspection and monitoring requirements from § 63.964 of subpart RR (National Emission Standards for Individual Drain Systems) are incorporated in the final rule. Monitoring requirements for vent collection systems are (1) a visual inspection of the closed-vent system and enclosure opening seals initially and every 30 days, (2) demonstration of no detectable leaks initially and annually for positive pressure systems or portions of systems, and (3) repair of defects and leaks as soon as practical.

For the CCA, EPA is not specifying the parameters to be monitored in the final rule since the types of equipment that would be used in the CCA are not known at this time. Consequently, the final rule specifies that owners or operators choosing to use the CCA must conduct an initial performance test to determine the appropriate parameters and corresponding parameter values to be monitored continuously. Rationale for the parameter selection must also be provided for the Administrator's approval.

m. Reporting and Recordkeeping Provisions. Sources subject to the NESHAP are required to comply with recordkeeping and reporting provisions in the part 63 General Provisions, and other specified requirements in the NESHAP.

Sources subject to the rule are required to keep readily accessible records of monitored parameters. The monitoring records must be maintained for five years (two years on-site, three years off-site). For each enclosure opening, closed-vent system, and pulping process condensate storage tank, the owner or operator must record the equipment type and identification; results of negative pressure tests and leak detection tests; and specific information on the nature of the defect and repairs. The position of bypass line valves, the condition of valve seals, and the duration of the use of bypass valves on computer controlled valves must also be recorded.

Sources subject to the NESHAP are required to submit the following types of reports: (1) Initial Notification, (2) Notification of Performance Tests, (3) Exceedance Reports, and (4) Semi-annual Summary Reports. Exceedance and summary reports are not required

for emission points that are exempt from the rule. Kraft mills must also submit, initially and bi-annually, a non-binding compliance strategy report for pulping sources electing to comply with the eight-year compliance extension (including the CCA) and for bleaching sources at bleached papergrade kraft and soda mills electing to comply with the Voluntary Advanced Technology BAT requirements. The compliance strategy report must contain, among other information, a description of the emission controls or process modifications selected for compliance and a compliance schedule indicating when each step toward compliance will be reached. For mills complying with the CCA, the report must contain a description of alternative control technology used, identify each piece of equipment affected by the alternative technology, and estimate total HAP emissions and emission reductions.

C. Effluent Limitations Guidelines and Standards

1. Subcategorization and Schedule

EPA is replacing the subcategorization scheme under the former effluent limitations guidelines for this industry (in 40 CFR parts 430 and 431) with a revised subcategorization scheme. EPA is redesignating the Builders' Paper and Roofing Felt category, formerly regulated in 40 CFR part 431, to a subcategory in part 430. This eliminates CFR part 431. The Agency is also redesignating the previous subpart numbers and section numbers, which are shown in Table II–2.

EPA is making no substantive changes to the limitations and standards for any newly redesignated subcategory except for the Bleached Papergrade Kraft and Soda subcategory (new subpart B) and the Papergrade Sulfite subcategory (new subpart E). The rationale for changing the existing subcategorization scheme is discussed in the proposal (58 FR at 66098–66100), the Development Document for Proposed Effluent Limitations Guidelines and Standards for the Pulp, Paper and Paperboard Point Source Category, also referred to as the proposal Technical Development Document (EPA 821–R93–019), and EPA's response to comments on this issue (DCN 14497, Vol. 1).

Although the Agency is codifying the revised subcategorization scheme for the whole industry today, EPA will promulgate revised effluent limitations guidelines and standards, as appropriate, for this industrial category in stages consisting of several subcategories at a time. The Agency has labeled these groupings of subcategories as "Phase I," "Phase II," and "Phase III." The schedule for these phases is explained below and in the following table.

TABLE II–2.—FINAL CODIFIED SUBCATEGORIZATION SCHEME (WITH PREVIOUS SUBPARTS NOTED) AND SCHEDULE FOR PROMULGATING EFFLUENT LIMITATIONS GUIDELINES AND STANDARDS (BY PHASE)

Final codified subpart	Final subcategorization scheme	Types of facilities covered including previous subcategories (with previous 40 CFR part 430 subparts noted)	Promulgation schedule (phase)*
A	Dissolving Kraft	Dissolving Kraft (F)	III
B	Bleached Papergrade Kraft and Soda.	Market Bleached Kraft (G), BCT Bleached Kraft (H), Fine Bleached Kraft (I), Soda (P).	I**
C	Unbleached Kraft	Unbleached Kraft (A) Linerboard Bag and Other Products Unbleached Kraft and Semi-Chemical (D, V)	II
D	Dissolving Sulfite	Dissolving Sulfite (K) Nitration Viscose Cellophane Acetate	III
E	Papergrade Sulfite Calcium-, Magnesium-, and Sodium-based pulps. Ammonium-based pulps. Specialty grade pulps.	Papergrade Sulfite (J, U) Blow Pit Wash Drum Wash	I**
F	Semi-Chemical	Semi-Chemical (B) Ammonia Sodium	II
G	Mechanical Pulp	Groundwood-Thermo-Mechanical (M), Groundwood-Coarse, Molded, News (N), Groundwood-Fine Papers (O), Groundwood-Chemi-Mechanical (L).	II
H	Non-Wood Chemical Pulp	Miscellaneous mills not covered by a specific subpart	II
I	Secondary Fiber Deink	Deink Secondary Fiber (Q) Fine Papers Tissue Papers Newsprint	II
J	Secondary Fiber Non-Deink	Tissue from Wastepaper (T), Paperboard from Wastepaper (E) Corrugating Medium Non-Corrugating Medium Wastepaper-Molded Products (W) Builders' Paper and Roofing Felt (40 CFR Part 431, Subpart A)	II
K	Fine and Lightweight Papers from Purchased Pulp.	Non integrated Fine Papers (R) Wood Fiber Furnish Cotton Fiber Furnish Nonintegrated Lightweight Papers (X) Lightweight Papers Lightweight Electrical Papers	II

TABLE II–2.—FINAL CODIFIED SUBCATEGORIZATION SCHEME (WITH PREVIOUS SUBPARTS NOTED) AND SCHEDULE FOR PROMULGATING EFFLUENT LIMITATIONS GUIDELINES AND STANDARDS (BY PHASE)—Continued

Final codified subpart	Final subcategorization scheme	Types of facilities covered including previous subcategories (with previous 40 CFR part 430 subparts noted)	Promulgation schedule (phase)*
L	Tissue, Filter, Non-Woven, and Paperboard from Purchased Pulp.	Non integrated Tissue Papers (S) Filter and Non-Woven (Y) Paperboard (Z)	II

* Phase I: Promulgation today; Phases II and III: Promulgation dates to be determined.
** Certain parameter limits to be promulgated as part of Phase II.

a. Bleached Papergrade Kraft and Soda Subcategory and Papergrade Sulfite Subcategory (subparts B and E). Under the consent decree entered in the case *Environmental Defense Fund and National Wildlife Federation* v. *Thomas,* Civ. No. 85–0973 (D.D.C.), and subsequently amended, EPA was required to use its best efforts to promulgate regulations addressing discharges of dioxins and furans from 104 bleaching pulp mills by June 17, 1995. Despite making its best efforts, EPA was not able to promulgate final effluent limitations guidelines and standards applicable to those mills by that date. However, in today's rule, EPA is promulgating effluent limitations guidelines and standards for mills in the Bleached Papergrade Kraft and Soda subcategory (subpart B) and the Papergrade Sulfite subcategory (subpart E), thereby addressing discharges from 96 of the mills covered by the consent decree. Regulating the discharge of dioxins and furans from the mills in the dissolving kraft and dissolving sulfite subcategories remains a very high priority; as discussed in more detail below, EPA will promulgate effluent limitations guidelines and standards for discharges of dioxins and furans from those mills as soon as possible.

b. Dissolving Kraft Subcategory and Dissolving Sulfite Subcategory (subparts A and D). EPA is evaluating comments and preliminary new data received since proposal affecting the Dissolving Kraft and Dissolving Sulfite subcategories. The Agency anticipates that the final effluent limitations guidelines and standards for these subcategories will be based on different technologies than those that served as the basis for the proposed limitations and standards. For example, EPA has received data suggesting that oxygen delignification is not a feasible process for making some dissolving pulp products, particularly high grade products. In addition, some use of hypochlorite appears to be necessary to maintain product quality for some products. Affected companies have undertaken laboratory studies and mill trials to develop alternative bleaching processes and to document the effects on wastewater and air emissions. The Agency expects to receive data on these studies and trials as the companies' efforts progress.

Because EPA's record presently is incomplete, EPA is not promulgating final effluent limitations guidelines and standards for these subcategories now. Even in the absence of these limitations and standards, however, EPA anticipates that alternative bleaching processes developed as a result of these studies and trials should contribute to substantial reductions in the generation and release of pollutants, when compared to current operating practices. Among the pollutants EPA expects to be reduced are dioxin, furan, and chlorinated phenolic pollutants at levels comparable to those achieved by subpart B mills. The Agency also expects to see significant reductions in AOX and chloroform. EPA encourages mills in these subcategories to expeditiously complete developmental work that will facilitate installation of alternative process technologies that achieve these pollution prevention goals.

As defined today, the Dissolving Sulfite subcategory (subpart D) applies to discharges from dissolving sulfite mills, including mills that manufacture dissolving grade sulfite pulps and papergrade sulfite pulps at the same site. See 40 CFR 430.40. This definition is based on EPA's analysis of data collected in the "1990 National Census of Pulp, Paper, and Paperboard Manufacturing Facilities." Data from the survey indicate that most sulfite mills that produce dissolving grade pulp do so at a very high percentage (typically greater than 85 percent) of their total pulp output. It has come to EPA's attention, however, that some specialty grade papergrade sulfite mills now have the capability to produce low percentages of dissolving grade pulp. EPA does not intend for these mills to be regulated under subpart D; rather, they are specialty grade sulfite mills within the Papergrade Sulfite subcategory (subpart E).

c. Schedule for the Remaining Subcategories. EPA is assessing comments and data received since proposal for the remaining eight subcategories. These eight subcategories are: (1) Unbleached Kraft; (2) Semi-Chemical; (3) Mechanical Pulp; (4) Non-Wood Chemical Pulp; (5) Secondary Fiber Deink; (6) Secondary Fiber Non-Deink; (7) Fine and Lightweight Papers from Purchased Pulp; and (8) Tissue, Filter, Non-Woven, and Paperboard from Purchased Pulp. For example, EPA has received additional information from an industry-sponsored survey of secondary fiber non-deink mills. The Agency also has received additional data from mills in other subcategories, including semi-chemical, unbleached kraft, and secondary fiber deink. EPA plans to promulgate effluent limitations guidelines and standards for these subcategories in the near future. It should be noted that air emission standards are being promulgated today for these subcategories.

2. Best Practicable Control Technology Currently Available (BPT) and Best Conventional Pollutant Control Technology (BCT) for the Bleached Papergrade Kraft and Soda Subcategory and the Papergrade Sulfite Subcategory

Although the Agency has the statutory authority to revise BPT effluent limitations guidelines, the Agency is exercising its discretion not to revise BPT for Subparts B and E at this time. In addition, none of the technologies that EPA evaluated for the purpose of setting more stringent effluent limitations for the conventional pollutants biochemical oxygen demand (BOD_5) and total suspended solids (TSS) passed the BCT cost test for either subcategory. Therefore, EPA is not revising BCT effluent limitations guidelines for Subparts B and E in this rulemaking.

3. Final Regulations for the Bleached Papergrade Kraft and Soda Subcategory (Subpart B)

a. Pollutants Regulated. In this rule, EPA is promulgating effluent limitations guidelines and standards for 2,3,7,8–TCDD ("dioxin"), 2,3,7,8–TCDF ("furan"), 12 specific chlorinated phenolic pollutants, the volatile organic pollutant, chloroform, and adsorbable organic halides (AOX). EPA is also promulgating new source performance standards for BOD_5 and TSS. As explained in section VI.B.3 below, the Agency is not promulgating effluent limitations guidelines and standards for chemical oxygen demand (COD) at this time. EPA is also not promulgating effluent limitations guidelines and standards for methylene chloride, methyl ethyl ketone (MEK), acetone, or color. See Section VI.B.3.

b. Best Available Technology Economically Achievable (BAT). After re-evaluating technologies for mills in the Bleached Papergrade Kraft and Soda subcategory, EPA has determined that the model technology for effluent limitations based on best available technology economically achievable (BAT) should be complete (100 percent) substitution of chlorine dioxide for chlorine as the key process technology, along with other in-process technologies and existing end-of-pipe biological treatment technologies. See Section VI.B.5.a.

c. New Source Performance Standards. The Agency has determined that the technology basis defining new source performance standards (NSPS) for toxics and non-conventional pollutants is the BAT model technology with the addition of oxygen delignification and/or extended cooking. See Section VI.B.5.b. EPA is also promulgating NSPS for the conventional pollutants BOD_5 and TSS.

As discussed elsewhere in today's **Federal Register**, EPA also is soliciting comment and intends to gather additional data with respect to totally chlorine-free processes that may be available for the full range of market products. EPA will determine whether to propose revisions to NSPS based upon TCF and, if appropriate, flow reduction technologies.

In this rule, NSPS are effective June 15, 1998. A source is a new source if it meets the definition of new source in 40 CFR 430.01(j) and if it commences construction after that date.

d. Pretreatment Standards. The Agency is promulgating pretreatment standards for existing sources (PSES) based on the BAT model technology, excluding biological treatment. EPA is promulgating pretreatment standards for new sources (PSNS) based on the model technology for NSPS, excluding secondary biological treatment. A source is a new source for purposes of PSNS if it meets the definition of new source in 40 CFR 430.01(j) and if it commences construction after the date of proposal, i.e., December 17, 1993. However, a new indirect discharger is not required to meet PSNS for subpart B until those standards become effective, i.e., June 15, 1998.

e. Voluntary Incentives Program Based on Advanced Technology. As noted earlier in this notice, EPA's vision of long-term environmental goals for the pulp and paper industry includes continuing research and progress toward environmental improvement. EPA recognizes that technologies exist, or are currently under development at some mills, that have the ability to surpass the environmental protection that would be provided by compliance with the baseline BAT effluent limitations guidelines and NSPS promulgated today. The Agency believes that individual mills could be encouraged to explore and install these advanced technologies. Accordingly, EPA is establishing a Voluntary Advanced Technology Incentives Program for direct discharging mills in the Bleached Papergrade Kraft and Soda subcategory. This program is discussed in Section IX.

4. Final Regulations for the Papergrade Sulfite Subcategory (Subpart E)

a. Segmentation of Subpart E and Best Available Technology Economically Achievable (BAT). After assessing comments and data received after the proposal, EPA is segmenting the Papergrade Sulfite subcategory to account for production of specialty grade pulps and the applicability of technologies to ammonium-based pulping processes.

The Agency is segmenting this subcategory and establishing BAT technology bases set forth below. (EPA has established the same segments for new source performance standards and pretreatment standards for subpart E.)

(1) For production of pulp and paper at papergrade sulfite mills using an acidic cooking liquor of calcium, magnesium, or sodium sulfite (unless the mill is a specialty grade sulfite mill), the BAT technology basis is totally chlorine-free bleaching. EPA is promulgating limitations for AOX for this segment. See Section VI.B.6.b.

(2) For production of pulp and paper at papergrade sulfite mills using an acidic cooking liquor of ammonium sulfite (unless the mill is a specialty grade sulfite mill), the BAT technology bases for this segment are elemental chlorine-free (ECF) technologies (complete substitution of chlorine dioxide for elemental chlorine, peroxide enhanced extraction, and elimination of hypochlorite) and biological wastewater treatment. EPA is promulgating effluent limitations for dioxin, furan, and 12 chlorinated phenolic pollutants for this segment, but is reserving promulgation of chloroform, AOX, and COD limitations until sufficient performance data are available. See Section VI.B.6.b.

(3) For production of pulp and paper at specialty grade sulfite mills, the BAT technology bases for this segment are ECF technologies (complete substitution of chlorine dioxide for elemental chlorine, oxygen and peroxide enhanced extraction, and elimination of hypochlorite) and biological wastewater treatment. EPA is promulgating effluent limitations for dioxin, furan, and 12 chlorinated phenolic pollutants for this segment, but is reserving promulgation of chloroform, AOX, and COD limitations for this segment until sufficient performance data are available. See Section VI.B.6.b.

b. New Source Performance Standards. For each segment identified above, EPA is establishing NSPS based on the model BAT technologies selected for the particular segment. The pollutants are the same as those regulated by BAT for the applicable segment. EPA is also exercising its discretion not to revise NSPS for BOD_5, TSS, and pH. See Section VI.B.6.c.

c. Pretreatment Standards. The Agency is promulgating pretreatment standards for the segments identified above. The pretreatment standards for existing sources (PSES) control the same pollutants controlled by BAT for the particular segment. EPA is promulgating pretreatment standards for new sources (PSNS) for the same toxic and nonconventional pollutants controlled by NSPS for the particular segment. A source is a new source for purposes of PSNS if it meets the definition of new source in 40 CFR 430.01(j) and if it commences construction after the date of proposal, i.e., December 17, 1993. However, a new indirect discharger is not required to meet PSNS for subpart E until those standards become effective, i.e., June 15, 1998. The technology bases for PSES and PSNS for the Papergrade Sulfite subcategory are the same as those chosen for the particular segments at the BAT and NSPS levels, respectively, excluding secondary biological treatment. For the ammonium-based and specialty grade segments, EPA is deferring making a pass-through determination, and hence,

promulgating pretreatment standards, for chloroform and AOX until it has sufficient performance data to set limitations and standards for those parameters. EPA is promulgating pretreatment standards for AOX for the calcium-, magnesium-, and sodium-based sulfite segment. EPA has made no pass-through determination at this time for COD for any segment. More details are described below in section VI.B.6.d.

5. Best Management Practices for the Bleached Papergrade Kraft and Soda Subcategory and the Papergrade Sulfite Subcategory

EPA is codifying best management practices (BMPs) applicable to direct- and indirect-discharging mills in the Bleached Papergrade Kraft and Soda and Papergrade Sulfite subcategories. In response to comments, EPA changed the scope of the BMPs to focus on spent pulping liquor, turpentine, and soap control and to allow for more flexibility in implementation. See Section VI.B.7.

III. Background

A. Prior Regulations, Proposal, Notices of Data Availability, and Public Participation

The regulations that EPA developed for the pulp, paper, and paperboard industry prior to this date are discussed in the proposal. See 58 FR at 66089–92.

In a **Federal Register** notice published on December 17, 1993 (58 FR 66078), EPA proposed integrated air and water rules that included proposed limitations and standards to reduce the discharge of toxic, conventional, and nonconventional pollutants in wastewaters and to reduce emissions of hazardous air pollutants from the pulp, paper, and paperboard industry. These proposed integrated regulations subsequently became known as "the Cluster Rules." EPA held a public hearing in Washington, D.C., on February 10, 1994, to provide interested persons the opportunity for oral presentation of data, views, or arguments concerning the proposed pretreatment standards. On March 17, 1994 (59 FR 12567), EPA published a correction notice to the proposed rules and extended the comment period to April 18, 1994.

In the preamble to the proposed rules, EPA solicited data on various issues and questions related to the proposed effluent limitations guidelines and standards and air emissions standards. The Agency received and added new material to the Air and Water Dockets. In a notice of data availability published on February 22, 1995 (60 FR 9813), EPA announced the availability of new data related to the proposed air emissions standards. Those new data are located in Air Docket A–92–40.

In a second notice of data availability published on July 5, 1995 (60 FR 34938), EPA announced the availability of new information and data related to the proposed effluent limitations guidelines and standards. Those new data are located starting at Section 18.0 of the Post-Proposal Rulemaking Record, which is a continuation of the proposal record. The Post-Proposal Rulemaking Record is located in the Water Docket. EPA did not solicit comment on the new air and water data in either notice.

On March 8, 1996, EPA published a **Federal Register** notice pertaining to the air portions of the proposed rules and announced the availability of supplemental information (61 FR 9383). The comment period for that notice closed on April 8, 1996. EPA also proposed MACT standards for mechanical pulping mills, secondary fiber pulping (deinked and non-deinked) mills, and non-wood mills, and asked for additional information on these mills. Furthermore, EPA announced that it was continuing to investigate paper machines and that no MACT standard for paper machines was being proposed at the time. EPA acknowledged an industry testing program was underway; EPA also acknowledged its request to States for data on non-wood pulping mills. EPA requested additional data on HAP emissions from, and control technologies for, paper machines to supplement information previously collected under the MACT process.

On July 15, 1996, the Agency published a **Federal Register** notice announcing the Agency's thinking, based on preliminary evaluation of the supplemented record and stakeholder discussions, regarding the technology options being considered as a basis for final effluent limitations guidelines and standards for the proposed Bleached Papergrade Kraft and Soda and Papergrade Sulfite subcategories (61 FR 36835). Data were added to the record and comments were solicited from interested parties. The comment period for that notice closed on August 14, 1996.

The Agency has held numerous meetings on these proposed integrated rules with many pulp and paper industry stakeholders, including a trade association (American Forest and Paper Association, or AF&PA), numerous individual companies, environmental groups, States, laboratories, consultants and vendors, labor unions, and other interested parties. EPA has added materials to the Air and Water Dockets to document these meetings.

B. Clean Air Act Statutory Authority

Section 112(b) of the CAA lists 189 HAPs and directs EPA to develop rules to control all major and some area sources emitting HAPs. Major sources are facilities that emit 10 tons of any single HAP or 25 tons of total HAPs annually. On July 16, 1992 (57 FR 31576), EPA published a list of major and area sources for which NESHAP are to be promulgated. The goal of NESHAP is to require the implementation of maximum achievable control technology (MACT) to reduce emissions and, therefore, reduce public health hazards from pollutants emitted from stationary sources. Pulp and paper production was listed as a category of major sources. On December 3, 1993 (58 FR 83941), EPA published a schedule for promulgating standards for the listed major and area sources. Standards for the pulp and paper source category were scheduled for promulgation by November 1997.

NESHAP established under section 112 of the Act reflect MACT or:

> * * * the maximum degree of reduction in emissions of the [HAP] * * * that the Administrator, taking into consideration the cost of achieving such emission reduction, and any nonair quality health and environmental impacts and energy requirements, determines is achievable for new or existing sources in the category or subcategory to which such emission standard applies * * * (See CAA section 112(d)(2)).

C. Clean Water Act Statutory Authority

The objective of the Clean Water Act (CWA) is to "restore and maintain the chemical, physical, and biological integrity of the Nation's waters." CWA Section 101(a). To assist in achieving this objective, EPA issues effluent limitations guidelines, pretreatment standards, and new source performance standards for industrial dischargers. The statutory requirements of these guidelines and standards are summarized in the proposal. See 58 FR at 66088–89.

D. Other EPA Activities Concerning the Pulp and Paper Industry

1. Land Disposal Restrictions Activities

At the time of proposal, it appeared that many of the surface impoundments used for wastewater treatment in the pulp and paper industry might become subject to Resource Conservation and Recovery Act (RCRA) regulation under the Land Disposal Restriction (LDR) program. See 58 FR at 66091. This program establishes treatment standards that hazardous wastes must meet before

they can be land disposed—placement in surface impoundments being a type of land disposal. This requirement extends not only to wastes that are identified or listed as hazardous under the RCRA rules when they are land disposed, but also to wastes that are hazardous when generated, cease to be hazardous as a result of dilution, and are then disposed. *Chemical Waste Management* v. *EPA,* 976 F.2d 2 (D.C. Cir. 1992), *cert. denied,* 507 U.S. 1057 (1993).

The pulp and paper industry has many mills that fit this pattern: Numerous wastewater streams are generated, some of them exhibit a characteristic of hazardous waste (corrosivity or toxicity in particular), the streams are commingled before centralized wastewater treatment occurs, and, in the course of commingling, the wastes no longer exhibit the characteristic, and the commingled wastewaters are then treated in a surface impoundment. EPA actually took action to temporarily defer applying LDR rules to this type of situation in the pulp and paper industry in order to allow unhindered promulgation of these Cluster Rules. See 61 FR at 15660, 15574 (April 8, 1996).

This issue, however, is now moot, at least for the time being. As discussed in the April 8, 1996, notice partially withdrawing the LDR Phase III final rule, 61 FR 15660, the Land Disposal Program Flexibility Act of 1996 provides, among other things, that RCRA characteristic wastewaters are no longer prohibited from land disposal once they are rendered nonhazardous, provided that they are managed in either a treatment system whose ultimate discharge is regulated under the CWA (including both direct and indirect dischargers), a CWA-equivalent treatment system, or a Class I nonhazardous injection well regulated under the Safe Drinking Water Act. Under the Land Disposal Program Flexibility Act of 1996, the LDR treatment standards for RCRA characteristic wastes in the pulp and paper industry (or any other industry) do not apply if the characteristic is removed and the wastes are subsequently treated in a surface impoundment that is part of a wastewater treatment system whose ultimate discharge is regulated by the CWA, or if a mill's treatment system provides wastewater treatment that is CWA-equivalent.

It should be noted that the Act requires EPA to undertake a five-year study to determine any potential risks posed by cross-media transfer of hazardous constituents from surface impoundments that accept these "de-characterized" wastes and warrant RCRA regulation. The findings of this study, begun by the Agency in April 1996, could eventually result in RCRA regulations for these units.

2. Land Application of Sludges

Under the Consent Decree entered in the case *Environmental Defense Fund and National Wildlife Federation* v. *Thomas,* Civ. No. 85–0973 (D.D.C.), EPA was required to propose rules under section 6 of the Toxic Substances Control Act (TSCA) to regulate the use of sludge produced from the treatment of wastewater effluent of pulp and paper mills using chlorine and chlorine-derivative bleaching processes (56 FR 21802; Docket OPTS–62100). EPA published the proposed rules on May 10, 1991. The proposed regulations sought to establish a final maximum dioxin and furan soil concentration of ten parts per trillion (ppt) toxic equivalents (TEQ) and site management practices for the land application of bleached kraft and sulfite mill sludge. EPA originally planned to promulgate the rule by November 1992.

On December 11, 1992, EPA informed the plaintiffs of the Consent Decree that the decision on the promulgation of the proposed sludge land application rule was deferred pending promulgation of the integrated rulemaking for effluent limitations guidelines and standards and national emission standards. EPA reasoned that the effluent limitations guidelines and standards and air emissions standards would have the potential to result in bleach plant process changes that EPA expected would result in reduced dioxin and furan contamination levels in sludge. In addition, EPA was awaiting the results of its dioxin reassessment activities.

In light of the anticipated impact of the effluent limitations guidelines and standards and air emissions standards on reducing dioxin in pulp and paper mill sludges, as well as reduction in sludge dioxin levels from industry-initiated improvements, EPA chose to defer the decision on promulgation of the final sludge land application rule. When EPA has determined the final impact of today's effluent limitations guidelines and standards on sludge dioxin concentration, EPA will re-evaluate the risk from sludge land application and will choose the appropriate regulatory or non-regulatory mechanism to address the situation.

Prior to that determination, however, EPA has taken action to achieve risk reduction for situations where sludge is being applied to land.

While awaiting completion of the effluent limitations guidelines and standards, air emission standards and the dioxin reassessment, EPA has promoted the establishment of an industry environmental stewardship program for the practice of sludge land application.

3. Hazardous Listing Determination

Under the consent decree entered in the case of *Environmental Defense Fund* v. *Browner,* Civ. No. 89–0598 (D.D.C.), "EPA shall promulgate a listing determination for sludges from pulp and paper mill effluent on or before the date 24 months after promulgation of an effluent guideline regulation under the Clean Water Act for pulp and paper mills. This listing determination shall be proposed for public comment on or before the date 12 months after promulgation of such effluent guideline regulation. However, EPA shall not be required to propose or promulgate such a listing determination if the final rule for the pending effluent guideline rulemaking (amending 40 CFR part 430) under the Clean Water Act to regulate the discharge of dioxins from pulp and paper mills is based on the use of oxygen delignification, ozone bleaching, prenox bleaching, enzymatic bleaching, hydrogen peroxide bleaching, oxygen and peroxide enhanced extraction, or any other technology involving substantially similar reductions in uses of chlorine-containing compounds. If EPA concludes that the final effluent guideline regulation is based on use of such a process and that, as a result, no listing determination is required, EPA shall so inform plaintiff in writing within 30 days of the promulgation of the effluent guideline regulation."

At this time, EPA is assessing whether the technology bases for the effluent limitations guidelines and standards promulgated today would fulfill the condition described in the Consent Decree. If so, the Agency would conclude that a listing determination is not warranted. If EPA concludes it does not fulfill the condition, a listing determination would be conducted.

4. Dioxin Reassessment

In the spring of 1991, EPA initiated an effort to reassess the scientific bases for estimating dioxin risk. The activities associated with the dioxin reassessment before proposal are described in the proposal. See 58 FR at 66092–93. After the proposal, in September 1994, EPA published a public review draft of this effort, which is commonly referred to as the EPA Dioxin Reassessment. The draft reassessment addressed not only the health effects of dioxin-like chemicals

but also dioxin sources and pathways for human exposure. Since the draft documents were released, EPA received thousands of pages of public comments. EPA submitted the documents to formal peer review by the EPA Science Advisory Board (SAB). The SAB was supportive of the overall reassessment effort and endorsed the major conclusions of the exposure document and chapters one through seven of the health document. They did, however, believe that additional work was needed on the dose-response modeling chapter and the risk characterization chapter.

The reassessment is currently being revised and updated in response to public comments. The two chapters singled out by the SAB are being revised by specially established panels composed of scientists from both inside and outside the Agency. Once the work of the special panels is completed these two revised chapters will be examined by peer review panels, and then resubmitted to the SAB for final review. EPA currently anticipates completion and release of the dioxin reassessment in the spring of 1998.

5. Clean Water Act Section 307(a) Petition

On September 14, 1993, the Natural Resources Defense Council and the Natural Resources Council of Maine filed with EPA on behalf of 57 individuals and environmental groups a petition to prohibit the discharge of dioxin by pulp and paper mills. The petitioners ask EPA to accomplish this prohibition by prohibiting the use of chlorine and chlorine-containing compounds as inputs in the manufacturing process. The petitioners believe that the prohibition is warranted by the dangers to human health and the environment posed by dioxin. The petitioners invoke CWA section 307(a)(2) for authority for such a prohibition.

Authority for the petition and requested prohibition derives from a different section of the Clean Water Act than today's technology-based effluent limitations guidelines and standards. However, because the petition raised many issues related to the effluent guidelines rulemaking, EPA solicited comment on the issues raised in the petition at the time it proposed effluent limitations guidelines and standards for the pulp and paper industry. See 58 FR at 66174. EPA received thousands of pages of comments and expects to issue a decision granting or denying the petition after completion of the dioxin reassessment.

6. Cooling Tower Intake Assessment

EPA is developing regulations under section 316(b) of the Clean Water Act, which provides that any standard established pursuant to Section 301 or 306 and applicable to a point source shall require that the location, design, construction, and capacity of cooling water intake structures reflect the best technology available for minimizing adverse environmental impact. Section 316(b) applies only to the intake of water, not the discharge. A primary goal of the regulation that EPA is developing would be to minimize the destruction of fish and other aquatic organisms as they are drawn into an industrial facility's water intake. EPA plans to conduct screening level and detailed surveys to estimate the number and type of facilities that utilize cooling water intake structures and thus are within the scope of Section 316(b). The pulp and paper industry uses a significant amount of cooling water. EPA intends to gather data on pulp and paper facilities during the Section 316(b) rulemaking through questionnaires and site visits. The Section 316(b) regulation is scheduled for proposal in 1999 with the final rule due in 2001.

IV. Changes in the Industry Since Proposal

A description of the pulp and paper industry, including manufacturing processes, pulping processes, bleaching processes, and papermaking is included in the proposal. See 58 FR at 66095–96.

The proposed water regulation encompassed the entire pulp and paper industry of approximately 500 facilities. The proposed air regulations (MACT I and MACT III) covered approximately the same number. Under today's action, approximately 490 mills will be covered by the final MACT I and MACT III rules. Of these mills, 155 will be affected by MACT standards for mills that chemically pulp wood. A subset of these mills—96 mills—will be covered by the final effluent limitations guidelines and standards promulgated today.

Since the proposal, some facilities have modified their processes. There has been a substantial move toward elemental chlorine-free (ECF) bleaching, and mills are continuing to increase their substitution of chlorine dioxide for chlorine. Additionally, more mills are utilizing oxygen delignification and extended cooking than at proposal. All these developments result in decreased discharges of dioxins and furans to receiving waters.

The U.S. pulp and paper industry's involvement with totally chlorine-free (TCF) bleaching has not changed substantially since proposal. As was the case at the time of proposal, only one U.S. mill produces TCF kraft pulp; however, this mill is now able to attain higher brightness than was achieved at the time of the proposal.

The number of companies in the industry is constantly changing as new companies enter the market and other companies leave the industry or merge with other companies. In the subcategories now designated as Subparts B and E, only one mill has closed since proposal and one has changed subcategories. No new Subpart B or E mills have commenced construction since the time of proposal.

For more details on the technology status of mills covered by the final Cluster Rules, see the "Supplemental Technical Development Document," DCN 14487.

V. Summary of Data Gathering Activities Since Proposal

A. Data Gathering for the Development of Air Emissions Standards

To develop today's standards, extensive data collection and technical analyses were conducted. Prior to proposal, EPA used information in a 1990 census of pulp and paper mills, a 1992 voluntary mill survey, an EPA sampling program, site visits at a number of mills, and a review of State and local regulations to obtain information on emissions, emission control technologies, and emission control costs for pulp and paper mill emission points. After proposal, EPA obtained additional information from the industry. This information included test reports from a variety of testing programs, as well as numerous reports, studies, and memoranda on other issues related to the development of emission control requirements. The information collected before and after proposal was used as the technical basis in determining the MACT level of control.

EPA also used information on pulp and paper mill production processes available in the general literature and information on control technology performance and cost information developed under other EPA standards to determine MACT.

Industry commenters indicated that they would be completing a comprehensive emission testing program after proposal, and EPA considered this information to be vital to the development of the final regulation. Therefore, EPA agreed to consider the new data and issued two notices of availability of supplemental information on February 22, 1995 (60 FR 9813) and March 8, 1996 (61 FR

9383) announcing the information and offering the likely implications to the final rule. The opportunity for a public hearing was offered on the March 8, 1996 action, but no request for a hearing was received. Public comments on the March 8, 1996 action were accepted from March 8, 1996 to April 8, 1996. Commenters included industry representatives, States, environmental organizations, and other members of the public.

In the March 8, 1996 supplemental notice, EPA solicited additional data and comments on proposed changes to the December 17, 1993 proposed rule.

Data added to Air Docket A–92–40 since the March 8, 1996 supplemental notice are located in section IV of this docket. These items include additional information on sulfite mills (IV–D1–98, IV–D1–100), comments on definitions (IV–D1–97, IV–D1–99, IV–D1–104), comments on the emission factor document (IV–D1–102), clarification of the 1992 MACT survey responses (IV–D1–101), and other information.

B. Data Gathering for the Development of Effluent Limitations Guidelines and Standards

EPA has gathered a substantial amount of new information and data since proposal in connection with today's water regulations. Much of this information was collected with the cooperation and support of the American Forest and Paper Association (AF&PA) and the National Council of the Paper Industry for Air and Stream Improvement (NCASI), and with the assistance of many individual mills in the United States. Additional information also has been submitted by environmental groups. EPA has gathered additional information from pulp and paper mills outside of the United States, primarily in Canada and Europe.

Some of the new information and data were generated through EPA-sponsored field sampling or visits at individual mills in the United States, Canada, and Europe. Additional sampling data were voluntarily supplied by many facilities, and information from laboratory and pilot-scale studies was shared with the Agency. In order to clarify comments on the proposal, the Agency also gathered information from several surveys administered by AF&PA and NCASI, including data on secondary fiber mill processes, recovery furnace capacities, best management practices, capital and operating costs, process operations, and impacts of technology on the recovery cycle.

The data gathering activities for this final rule are summarized in detail in the proposal, see 58 FR at 66096, and in the July 15, 1996, notice of data availability, see 61 FR at 36837.

VI. Summary of the Major Changes Since Proposal and Rationale for the Selection of the Final Regulations

A. Air Emission Standards

At proposal, the standards for mills that chemically pulp wood were based on the MACT floor control level. A uniform set of requirements would have applied to all mills that chemically pulp wood using the kraft, sulfite, soda, or semi-chemical process. The proposed standards would have required that, with the exception of some with very low volumetric and mass flow rates, all emission points in the pulping and bleaching area of these mills be controlled. The proposed standards also would have required that all wastewater streams produced in the pulping area of the mill be controlled except for those with a specified low concentration of hazardous air pollutants (HAPs). The proposed control technology basis was to enclose any open process equipment in the pulping and bleaching areas and route all vents and pulping wastewater to a control device. The proposed control technology basis was combustion for pulping area vent sources, scrubbing for bleaching area vent sources, and steam stripping for pulping wastewater.

Following proposal, EPA received a large number of comments and data to support the need for subcategories with separate MACT standards for each. After considering the data and comments, the final rule specifies separate MACT requirements for each of the four types of pulping processes subject to the standard. The low volumetric and mass flow rates for pulping and bleaching vents and the low concentration value for pulping wastewater are no longer used to determine applicability to the standard. Rather, for each subcategory, the standard lists the specific equipment and pulping area condensates that require control.

For each subcategory, the Agency determined the MACT floor level of control for existing and new sources, and analyzed the cost and impacts for control options more stringent than the floor. This analysis is presented in chapter 20 of the background information document for the promulgated NESHAP, and is also discussed in the proposal preamble. Based on the results of this analysis, the Agency determined that it was not reasonable to go beyond the MACT floor level of control for sources at kraft, semi-chemical, and sulfite pulp mills, bleaching systems, or kraft condensate systems. The Agency determined that control beyond the floor at soda mills was technically feasible and could be achieved at a reasonable cost. A discussion of the Agency's decision for soda mills is presented in the March 8 supplemental notice and in section VI.A.5.

In response to comments received on the proposed standards, several changes have been made to the final rule. While some of these changes are clarifications designed to make the Agency's intent clearer, a number of them are significant changes to the compliance requirements. A summary of the substantive comments and changes made since the proposal are described in the following sections. Detailed Agency responses to public comments and the revised analysis for the final rule are contained in the background information document and docket. See Section X.A.

1. Definition of Source

At proposal, EPA defined a single broad source that was subject to both existing and new source MACT. That single source included the pulping processes, the bleaching processes, and the pulping and bleaching process wastewater streams at a pulp and paper mill. EPA also considered and solicited comments on the concept of multiple smaller sources that would be subject to the existing and new source MACT requirements.

In defining the source at proposal, EPA considered the impact of the definition on mills making changes to existing facilities. In general, the narrower the definition of source, the more likely it is that changes to existing facilities would be deemed "new sources" under the CAA. With limited exceptions, these new sources must be in compliance with new source MACT standards on the date of startup or June 15, 1998, whichever is later. However, the CAA and the CWA differ regarding applicability requirements and compliance deadlines for new sources. As such, EPA was concerned that a pulp and paper mill planning to construct or reconstruct a source of HAPs between proposal and promulgation of these integrated regulations would find it necessary to plan for compliance with the NESHAP (required on the date it becomes effective) without knowing the requirements of the effluent guidelines for the industry. This situation appeared to be inconsistent with one objective of the integrated rulemaking: allowing facilities to do integrated compliance planning. EPA thus determined that the

best solution to these concerns was to define a single broad source at proposal.

In the March 8, 1996 supplemental notice, EPA indicated a continuing inclination for a broad, single source definition. EPA also discussed broadening the source definition further to include papermaking systems and causticizing equipment and solicited comments on these additions. EPA's reason for considering the addition of these two equipment systems was to facilitate implementation of the clean condensate alternative for kraft mills.

Commenters on the proposed standards and on the March 8 notice largely agreed with the broad, single source definition. One commenter supported a narrow source definition, noting it was inappropriate for new construction at an existing source to be classified as a modification (and hence subject to existing source MACT). The commenter further stated that the final regulation should specify a narrow source definition for determining applicability to new source MACT. Some commenters also stated that EPA should clarify for the final regulation that mill processes not included in the source definition should not be subject to future case-by-case MACT requirements under CAA section 112(g).

EPA considered all of the comments received on this issue since proposal and maintains that the definition of source should be broad enough such that small changes to an existing mill do not trigger new source requirements in the NESHAP. However, EPA also agrees with the commenter that at some point, changes to an existing mill are substantial enough that new source MACT should apply.

In considering how best to define the source, EPA did not want to define it so narrowly that changes to or additions of individual pieces of equipment would be subject to new source MACT and be required to be in compliance with new source MACT at startup. In fact, EPA was concerned that to do so could discourage mills from implementing pollution-prevention changes as soon as practicable after promulgation of the Cluster Rules. Such changes might include replacing an existing rotary vacuum washer system with a low-flow washer system or installing an oxygen delignification system, both of which, if subject to existing source requirements, would get the eight-year compliance time, discussed later in section VI.A.3.b. Once mills are complying with the existing source MACT requirements, it also did not seem reasonable that they should have to tear out and rebuild that vent collection system to accommodate small equipment changes in the future unless those changes occurred along with other substantial changes that would justify rebuilding the vent collection system.

For the final regulation, EPA is defining the affected source to which existing MACT requirements apply to include the total of all HAP emission points in the pulping and bleaching systems (including pulping condensates). In considering how mills might engineer their vent collection systems and control devices, EPA has concluded that the following actions occurring after proposal are substantial enough that new source MACT requirements apply:

∞ A pulping or bleaching system at an existing mill is constructed or reconstructed; or

∞ A new pulping line or bleaching line is added to an existing mill.

The proposal date for mills that chemically pulp wood is December 17, 1993. The proposal date for mills that mechanically pulp wood, pulp secondary fibers, or pulp non-wood materials is March 8, 1996.

The final regulation also provides for an alternative definition of source to facilitate implementation of the clean condensate alternative. For mills using the alternative to comply with the kraft pulping standards, the final regulation defines a single broad source that includes the total of all pulping, bleach, causticizing, and papermaking systems. A more detailed discussion of the clean condensate alternative is given in section VI.A.3.d.

EPA agrees with the commenters that certain emission points that are excluded from the definition of affected source in today's rule, or are subject to a determination that MACT for these operations is no control, should not be required to undergo CAA section 112(g) review. The sources that have been so identified are wood yard operations (including wood piles); tall oil recovery systems at kraft mills; pulping systems at mechanical, secondary fiber, and non-wood fiber pulping mills; and papermaking systems. With regard to wood yard operations, tall oil recovery systems, and pulping systems at mechanical, secondary fiber, and non-wood fiber pulping mills, EPA has determined that these sources do not emit significant quantities of HAPs and EPA is not aware of any reasonable technologies for controlling HAPs from these sources. For papermaking systems, EPA has not identified any reasonable control technology, other than the clean condensate alternative, that can reduce HAP emissions attributable to HAPs present in the pulp arriving from the pulping and bleaching systems. Additionally, EPA has determined that the use of papermaking systems additives and solvents do not result in significant emissions of HAPs (Air Docket A–92–40, IV–B–27). Therefore, based on the applicability requirements of section 112(g) [40 CFR 63 part B, 63.40(b)], the following sources would not be required to undergo section 112(g) review: wood yard operations; pulping systems at mechanical, secondary fiber, and non-wood fiber mills; tall oil recovery systems; and papermaking systems.

2. Named Stream Approach

At proposal, the rule proposed applicability cutoff values (i.e., volumetric flow rate and mass flow rate) as a way to distinguish the vent and condensate streams that would be required to meet the rule. Since proposal, the pulp and paper industry submitted additional data that allowed EPA to better characterize the vent and condensate streams that should be controlled.

In the final rule, the applicability cutoffs contained in the proposed rule have been replaced in favor of specifically naming process equipment and condensate streams that would be required to meet the rule, with the exception of decker, knotter, and screen systems at existing sources. For these systems, the additional industry data was used to determine applicability cutoffs in the form of HAP emission limits (for knotter and screen systems) and HAP concentration limits in process water (for decker systems) to identify the systems that should be controlled at existing sources. A description of the vent and condensate streams to be controlled is presented in sections II.B.2, VI.A.3.a, and VI.A.4–7. The Agency added language in the definitions for the named systems to make the definitions applicable to equipment that serves a similar function as those specifically listed. This addition was made because there are no standard names for process equipment. The EPA's intent was to include the equipment that function the same as the equipment specifically named in the definitions, even though the mill may use a different name for that piece of equipment.

The different approach used in the final rule does not significantly change the number of emission points controlled from those intended to be controlled in the proposed rule. The emission points and condensate streams that are being controlled in the final rule are fundamentally the same emission sources that EPA intended to be controlled in the proposed rule. EPA

concluded that the revised approach is easier and less costly to implement, for both the affected industry and the enforcement officials, since extensive emission source testing is not required to identify the vent and condensate streams to be controlled.

3. Kraft Pulping Standards

a. Applicability for Existing Kraft Sources. In the December 17, 1993 proposal, all pulping system equipment, with some exceptions, would have been required to be controlled. The exceptions were for deckers and screens at existing sources and small vents below specified volumetric mass flow rates and mass loadings. EPA proposed to require that treatment of all pulping wastewater streams except those with HAP concentrations below 500 ppmw and flow rates below 1.0 liter per minute.

In the March 8, 1996 supplemental notice, the Agency presented potential changes to the kraft mill standards. These changes included specifically naming equipment systems and pulping wastewater subject to the standards. For existing sources, the named equipment systems in the supplemental notice included: the LVHC system, pulp washing system, oxygen delignification system, the pre-washer knotter and screening system, and weak liquor storage tanks. The subject wastewater streams are the pulping process condensates from the digester, evaporator, turpentine recovery, LVHC collection, and the HVLC collection systems. EPA identified these systems and condensates to be controlled based on information presented in responses to industry surveys available prior to proposal and on updates and clarifications to survey responses submitted by the pulp and paper industry after proposal. At proposal, EPA did not have sufficient information to define these equipment systems.

At proposal, the Agency solicited comments on its determination of the control technology basis for the MACT floor and for MACT. The proposed MACT floor level of control at existing kraft sources was 98 percent reduction of emissions from the LVHC system, pulp washing system, and oxygen delignification system. In considering information received after proposal, the Agency continued to have questions, which were discussed with representatives of the pulp and paper industry, on the data provided in the survey responses on weak liquor storage tanks, the knotter and screening system, and the decker system at existing sources (Air Docket A–92–40, IV–D1–101). In the March 8, 1996 notice, the Agency requested further information on whether to distinguish between types or ages of weak liquor storage tanks, methods and costs of controlling them, and the level of control that represents the MACT floor for the different tanks. The Agency also requested data on the type of controls present on knotter and screening systems.

Commenters to the March 8 notice provided additional information on the kraft mills which control vents from knotter system, screen systems, decker systems, weak liquor storage tanks, and oxygen delignification systems. The commenters noted that many of the mills surveyed originally had misinterpreted survey questions for these systems. The commenters concluded that the revised information indicated that less than 6 percent of the knotter and screen systems, decker systems, and weak liquor storage tanks were actually controlled; they concluded, therefore, that the existing source floor for these vents is no control. Additionally, the commenters asserted that it would not be cost-effective to go beyond the floor to control weak liquor storage tanks because tanks at existing sources would not have the structural integrity to withstand a vacuum on them caused by the vent collection system. The commenters asserted that, to control emissions, these tanks would either need to be replaced or be retrofitted with expensive add-on controls that would not be cost-effective. One commenter supported using age as a means to indicate structural integrity and, therefore, rule applicability for weak liquor storage tanks. Several commenters disagreed that age was an appropriate indicator.

The Agency has evaluated the information submitted by the commenters on the control level for the knotter system, screen system, decker system, and weak liquor storage tanks. Information submitted by the commenters indicated that of the 597 weak liquor storage tanks in the survey only 28 (4.7 percent) actually had emissions routed to a control device (Air Docket A–92–40, IV–D1–106). Some respondents had previously included other types of controlled tanks, such as washer filtrate tanks, in their totals because EPA's original survey did not provide a definition of weak liquor storage tanks. The Agency, therefore, has concluded that the MACT floor level of control for weak liquor storage tanks at existing sources is no control. While some tanks are controlled, available information does not support the supposition that age is a good parameter for distinguishing structural integrity. In addition, the Agency evaluated the cost of going beyond the floor to control weak liquor tanks. The results of EPA's analysis indicated that a significant cost would be incurred for a limited emission reduction. This analysis is presented in Chapter 20 of the background information document for the promulgated NESHAP. Therefore, the Agency agrees with the commenters that control beyond the floor is not justified. Weak liquor tanks at new sources are required to be controlled.

The Agency disagrees with the comments that decker systems are not controlled at the floor at existing sources. Information supplied by the pulp and paper industry indicates there are 170 decker systems in mills responding to EPA's industry survey questionnaires. All the decker systems are associated with bleached mills. Of the 170 decker systems, 14 are controlled (8 percent) (Air Docket A–92–40, IV–B–16).

The majority of decker systems controlled at the floor (10 systems) are associated with oxygen delignification systems or are being used as an additional stage of pulp washing. The Agency believes that these types of decker systems are operated similarly to and have similar emissions as pulp washers. Decker systems used in this manner receive contaminated condensates or filtrates that may be recycled from other processes, such as the oxygen delignification system or combined condensate tanks. The process water may have a HAP concentration that would release significant amounts of HAP to the air from the air-water interface. The Agency characterized the emissions from this source to identify the types of decker systems with high emissions. Information supplied in NCASI technical bulletin 678 provided a relationship between air emissions and methanol concentrations in process water used in rotary vacuum drums. EPA evaluated this relationship and determined that decker controls and higher HAP emission rates were associated with deckers that used process water with HAP concentrations greater than or equal to 400 ppmw, or that did not use fresh water or "whitewater" from papermaking systems (Air Docket A–92–40, IV–B–22).

Therefore, the Agency has determined that it is appropriate to make a distinction among types of decker systems at existing sources for the purpose of setting the MACT standard. Decker systems at existing sources using fresh water or "whitewater" from papermaking systems, or using process

water with HAP concentrations less than 400 ppmw, are not required to be controlled. Decker systems at new sources are required to be controlled regardless of the HAP concentration in the process water introduced into the decker.

EPA has reviewed available data on knotter and screen systems and has concluded that these systems are controlled sufficiently to establish a MACT floor level of control, and also that control more stringent than the floor is not warranted. Data used to reach this conclusion include survey responses from the 1992 voluntary survey, follow-up telephone surveys conducted by the National Council of the Paper Industry for Air and Stream Improvement (NCASI), and emissions data from the NCASI 16-mill study. Although the data indicate that many of these systems are currently controlled to some degree, the survey responses were not detailed enough in their equipment system descriptions and the test data were too limited for the Agency to use these two sources of information alone to develop the MACT control requirements. Because these equipment systems, nomenclature, and control configurations vary across the industry, the Agency decided that a HAP emissions limit would be the best way for mills to determine which systems would require control. EPA lacks sufficient data, however, to pinpoint any single value that represents the MACT floor. Rather, based on the survey and test data, there are a range of values from which EPA could choose. EPA further considered the costs of control in choosing from this zone of reasonable values.

Of the 171 knotter systems reported in the 1992 voluntary survey, 12 knotter systems at 5 mills were reported as controlled and ducted into the noncondensible gas (NCG) collection system and another 49 knotter systems at 23 mills were reported as having no vents. NCASI followed up by telephone surveys with these 28 mills (Air Docket A–92–40, IV–D1–101, IV–D1–112, IV–D1–114). The follow-up surveys indicated a fair amount of misreporting at these 28 mills. NCASI did not resurvey for all 171 knotter systems. Therefore, the following knotter system floor determination assumes that the mills not resurveyed that originally reported no knotter system controls did not control any vents.

From the 28 mills resurveyed, it was determined that six knotter systems or 3.6 percent (6/171) route all vents into the NCG collection system; another two knotter systems or 1.2 percent (2/171) route all knotter hood vents into the NCG collection system; another eight knotter systems or 4.7 percent (8/171) use only pressure knotters; and another two knotter systems or 1.2 percent (2/171) route all vents to the smelt dissolving tank scrubber. Industry collected data at seven pressure/open (also referred to as pressure/vibrating) knotter systems and found the methanol emissions to range from 0.005–0.07 kilograms per megagram of oven-dried pulp (ODP) produced, and collected data at one pressure knotter system and found the methanol emissions to be 0.0042 kilograms per megagram ODP produced. Emissions data are summarized in the Chemical Pulping Emission Factor Development Document (Air Docket A–92–40, IV–A–8). Because the pressure knotter system emissions were lower than the emissions at the pressure/open systems, pressure systems can be considered a type of controlled system. Therefore, 18 or 10.5 percent (6+2+8+2 = 18/171) of the knotter systems have some level of emissions control. The Agency believes that this estimate of the number of knotter systems controlled may be somewhat low because it is uncertain how many of the mills not resurveyed may have had the lower emitting pressure systems.

The 1992 voluntary MACT survey responses indicated that 96 screening systems out of the 199 reported are not vented. NCASI resurveyed by telephone 41 of these 96 mills. Assuming that the 55 mills not resurveyed look similar to the 41, the follow-up survey determined that seven percent (6/41 96/199) route their vents to the NCG collection system and 41 percent (35/41 96/199) have closed screens that vent through auxiliary tanks. Therefore, 48 percent of the screening systems have some level of control.

Industry collected data at one closed screen system and one open screen system. The closed screen system tested had methanol emissions of 0.004 kilograms per megagram of ODP produced. The open screen system tested had methanol emissions of 0.22 kilograms per megagram of ODP produced.

The Agency considered how best to characterize the average emissions limitation achieved by the best controlled 12 percent of the knotter systems and screen systems given the wide variety of control scenarios present in the industry. Either collecting and controlling vents on an open system or using closed equipment results in lower air emissions. The Agency decided to select the emissions limitation using the test data from the closed and open equipment systems. The Agency's decision is due in part to the fact that the technology basis for the effluent limitations guidelines and standards being promulgated in these Cluster Rules at 40 CFR Part 430 for bleached papergrade kraft and soda mills include closing the screening areas and returning wastewater to the recovery system. Thus, it is likely that many mills will move toward wider use of the lower air emitting pressure systems.

Because there is only one test data point for the pressure knotter systems and that emissions value is similar to the low end of the range of data points for the pressure/open knotter systems, the Agency did not believe it would be appropriate to set the emission limit equal to the one pressure knotter system. Similarly, because there is only one test data point for closed screens, the Agency did not believe it would be appropriate to use that single data point to set the emission limit for screening systems. The Agency could have selected any emission limit within the range of all available data for knotters (i.e., 0.0042 to 0.07 kilograms per megagram of ODP produced) and screens (i.e., 0.004 to 0.22 kilograms per megagram of ODP produced). However, recognizing the limited data available, the Agency also considered the cost effectiveness of controlling these systems to aid in setting the emission limits within the range of reasonable values (Air Docket A–92–40, IV–B–21).

Based on considering all available data, the final rule requires that existing kraft sources are required to control knotter systems with total mass emission rates greater than or equal to 0.05 kilograms of HAP per megagram ODP produced. Existing kraft sources are required to control screening systems with total mass emission rates greater than or equal to 0.10 kilograms of HAP per megagram ODP produced. Since it is often difficult to distinguish between the knotter system and screening system at mills, a mill may also choose to meet a total mass emissions limit of 0.15 kilograms of HAP per megagram ODP produced across the knotting and screening combined system. New sources are required to control all knotter and screen systems, regardless of emissions level.

b. Compliance Times for Kraft Mills. In the March 8, 1996 supplemental notice, the Agency discussed that it was considering allowing kraft mills an extended compliance time of five additional years (eight years total) for pulp washing and oxygen delignification systems (61 FR at 9394–95). The notice discussed how the additional time would encourage the

maximum degree of overall multi-media pollution reduction and, in particular, would avoid discouraging mills from installing oxygen delignification equipment to reduce water pollution. The notice recognized the time constraints mills would face in trying to comply with both air and water rules essentially at the same time and that too short a compliance time could preclude mills from considering pollution prevention techniques with considerable environmental benefits, such as oxygen delignification and low-flow washers. These technologies reduce the amount of pollutants discharged into the wastewater. The March 8, 1996 notice also solicited comment on whether this compliance extension should be extended only to mills that commit to install these technologies (if EPA were to decide not to include that equipment as part of its BAT model technology).

Commenters supported the extension of compliance time for pulp washing and oxygen delignification systems at existing sources. Several commenters also requested that the compliance time be extended for weak liquor tanks, knotter and screening systems, and other HVLC vent streams because emissions from these sources will be transported and controlled by the same HVLC collection and incineration system as the pulp washing and oxygen delignification systems. The commenters noted that extension of the compliance period for all HVLC sources also allows for proper consideration of the full range of emerging innovative water and air pollution control options. Comments were not received on whether to provide the compliance extension only to mills that elect to install more stringent control technologies than necessary to comply with the baseline BAT requirements.

The Agency reviewed the comments and agrees that vents included in the HVLC system should be allowed a similar compliance time as the pulp washing and oxygen delignification systems. The majority of emissions and vent gas flow from equipment associated with the HVLC vent streams occur from the pulp washing system and the oxygen delignification system. Therefore, the design of the HVLC collection and transport system would be significantly influenced by these two systems. The Agency determined if different compliance times were provided for the components of the HVLC system, an affected source would expend significant amounts of capital to control systems required to comply in the three-year time frame. The source would have to re-design the gas transport and control devices five years later to accommodate controlling the washing system and oxygen delignification system. This entire cost could discourage the implementation of low-flow washing systems and oxygen delignification.

This would serve as an obvious disincentive to installation of advanced wastewater treatment technology since mills would be understandably reluctant to replace a newly installed air pollution control system. Therefore, EPA concluded that additional compliance time is appropriate and necessary for the remaining equipment controlled by the HVLC collection and transport system as well as the pulp washing system and the oxygen delignification system. See generally 61 FR at 9394–95. The final rule thus allows affected sources to control all the equipment in the HVLC system at kraft pulping systems at the same time, not later than April 17, 2006. A mill that installs an oxygen delignification system at an existing source after April 17, 2006 must comply with the NESHAP upon commencing operation of that system.

Regarding EPA's solicitation of comments on providing a compliance extension to all kraft mills, no negative comments were received. Therefore, EPA has decided to extend the compliance time for all kraft mills.

The final rule includes requirements for kraft mills to submit a non-binding control strategy report along with the initial notification required by the part 63 General Provisions. The purpose of the control strategy report is to provide the Agency and the permitting authority with the status of progress towards compliance with the MACT standards. The control strategy report must contain, among other information, a description of the emission controls or process modifications selected for compliance with the control requirements and a compliance schedule. The information in the control strategy report must be revised or updated every two years until the mill is in compliance with the standards.

c. Condensate Segregation. The proposed standards for process wastewater would have required that all pulping wastewaters that met the mass emission rate and flow rate applicability criteria had to be treated to achieve the specified control options. Comments and data submitted to EPA indicated that kraft mills typically steam stripped the condensates from the digester, turpentine recovery, LVHC, and HVLC systems, and certain evaporator condensates. The data also indicated that mills that use steam strippers also practiced varying degrees of condensate segregation in order to minimize the flow rate and maximize the HAP mass in condensate streams sent to treatment.

In the March 8, 1996 **Federal Register** supplemental notice, EPA presented a discussion of condensate segregation and included definitions for condensate segregation and a segregated condensate stream. Commenters on the March 8 notice supported the definitions for condensate segregation and segregated condensate stream. Commenters also submitted additional information suggesting definitions for condensate segregation and segregated condensate stream as well as options for demonstrating compliance with the condensate segregation requirements. EPA evaluated the information and included some of the concepts in the final rule.

The final rule states that the condensates from pulping process equipment at kraft mills must be treated and allows a number of alternative methods of complying with the standards, all of which represent MACT. The final rule also states that the entire volume of condensate generated from the named pulping process equipment at kraft mills must be treated unless the volume from the digester, turpentine recovery, and weak liquor feed stages in the evaporator systems can be reduced using condensate segregation. If adequate segregation (as specified in the rule) is performed, only the high-HAP fraction streams from the digester system, turpentine recovery system, and the weak liquor feed stages in the evaporator system and the non-segregated streams from the LVHC and HVLC collection systems must be sent to treatment.

Discussions with the pulp and paper industry after the March 8, 1996 supplemental notice indicated that some mills might not be able to achieve the proposed 65 percent mass isolation with their existing equipment even though they are achieving high levels of HAP removal in the steam stripper system (Air Docket A–92–40, IV–E–84). Therefore, the final rule contains two options for demonstrating compliance with the segregation requirements. The first option is to isolate at least 65 percent of the HAP mass in the total of all condensates from the digester system, turpentine recovery system, and the weak liquor feed stages in the evaporator system (condensate streams from the LVHC and HVLC collection systems are not segregated). The second option requires that a minimum total HAP mass from the high HAP concentrated condensates from the digester system, turpentine recovery

system, and the weak liquor feed stages in the evaporator system and the total LVHC and HVLC collection system condensates be sent to treatment. The second option was included in the final rule because it achieves the same objective by sending a large enough mass to treatment to meet the floor-level control requirements.

For a detailed explanation of the concept of condensate segregation readers are referred to the docket (Air Docket A–92–40, IV–D1–107).

d. Clean Condensate Alternative. The proposed rule did not contain any provisions for emissions averaging. Industry comments on the proposal indicated support for incorporating an emission averaging approach in the final rule. After the public comment period, the pulp and paper industry submitted a comparison between an option developed by industry and the proposed MACT standards. The option formed the basis for the clean condensate alternative (CCA) in the final rule. The CCA focuses on reducing HAP emissions throughout the mill by reducing the HAP mass in process water streams that are recycled to various process areas in the mill. By lowering the HAP mass loading in the recycled streams, less HAP will be volatilized to the atmosphere.

The March 8, 1996 **Federal Register** supplemental notice presented a discussion of the industry's alternative (referred to as the "clean water alternative" in the notice). In the March 8 notice, EPA indicated that while the industry's concept was innovative, additional information would need to be submitted to the Agency to make the concept a viable compliance option, such as specific design parameters and data supporting the relationship between condensate stream HAP concentrations and HAP emissions from process equipment receiving the condensates.

Design specifications for the CCA were not available since no mills to date have implemented such a technology. However, the test data collected by the pulp and paper industry following the December 17, 1993 proposal included data on vent emissions and process water HAP concentrations that were used by industry to develop equations showing the relationship between HAP emissions from specific process equipment (e.g., pulp washers) and the HAP concentrations present in the process water sent to the equipment.

EPA evaluated these data and concluded that sufficient relationship appears to exist between HAP concentrations in recycled process wastewater and HAP emissions from process equipment, such that the CCA has the potential to achieve or exceed the requirements of the final standards. However, EPA has determined that the correlation equations developed by industry, because they were derived from small data sets, would not be sufficient for demonstrating compliance or equivalency with the final standards at a specific mill. Variability at a specific mill, such as types of process equipment, operating practices, process water recycle practices, and even type of wood pulped, can strongly influence the relationship between concentration in the process water and the process emissions.

The final rule contains provisions for using the CCA as a compliance option to the kraft pulping standards for the subject equipment in the HVLC system. An owner or operator must demonstrate to the Administrator's satisfaction that the total HAP emissions reductions achieved using the CCA are equal to or greater than the total HAP emission reductions that would have been achieved by compliance with the kraft pulping system standards for equipment in the HVLC system. The baseline HAP emissions for each equipment system and the total of all equipment systems in the CCA affected source (which is the existing MACT affected source expanded to include the causticizing and papermaking systems) must be determined after compliance with the pulping process condensate standards; after consideration of the effects of the effluent limitations guidelines and standards in 40 CFR part 430, subpart B; and after all other applicable requirements of local, State, and Federal agencies or statutes have been implemented. While engineering assessments or test data may be used to determine the feasibility of using the CCA, only test data may be used to demonstrate compliance with the kraft pulping system standards using the CCA.

e. Biological Treatment. At proposal, owners or operators using a biological treatment system to comply with the MACT requirements for pulping wastewater would have been required to measure the HAP or methanol concentration in the influent and effluent across the unit every 30 days and to identify appropriate parameters to be monitored to ensure continuous compliance. The proposed standards would have required that during the initial performance test, mills collect samples and analyze them using Method 304 to calculate a site-specific biorate constant. That constant, along with the operating parameters associated with the biological treatment system were to be entered into the WATER7 (updated to WATER8 since proposal) emissions model to demonstrate that the biological treatment system could achieve the treatment level required by the standards. Those operating parameters measured during the initial performance test were then to be monitored continuously to demonstrate compliance.

EPA acknowledged at proposal that industry was collecting information on the performance of biological treatment systems and monitoring techniques. EPA also noted that the industry was investigating the possibility of monitoring inlet and outlet soluble biochemical oxygen demand (BOD_5). EPA requested comments on applicable monitoring parameters for biological treatment systems and supporting data on biorates and corresponding parameters for monitoring.

EPA received a number of comments on testing and monitoring requirements for biological treatment systems. The industry submitted studies on biological treatment systems and on monitoring soluble BOD_5. Discussions were also held with the industry representatives on this issue.

In general, commenters objected to the proposed requirements to use Method 304 to calculate the site-specific biorate constants. Commenters felt that the laboratory-scale simulation of the biological treatment unit, which is basically what Method 304 requires, does not accurately reflect the biological degradation rates of the full-scale system. Commenters also stated that according to data collected, performance testing to demonstrate that biological treatment systems can meet the standards does not appear to be warranted given that methanol is highly biodegradable. Commenters further requested that if they had to conduct a performance test, they should also be permitted to use the inlet and outlet concentration procedures for calculating a site-specific biological degradation rate (biorate) constant as set forth in Appendix C of the Hazardous Organic NESHAP (HON). See 59 FR 19402 (April 22, 1994). Commenters also objected to having to demonstrate continuous compliance with the operating parameters, pointing out that a parameter could be exceeded and the biological treatment system could still be meeting the standards.

Following proposal, industry also submitted data on soluble BOD_5 across biological treatment system units. Industry stated that their data indicated that as long as the biological treatment system was achieving at least 80 percent

removal of soluble BOD_5, the biological treatment system was operating properly and that the unit would be meeting the standards. However, industry argued that soluble BOD_5 removal should not be a continuous monitoring parameter that if exceeded, would indicate a violation of the standards. Rather, a mill should be allowed to start measuring methanol removal across the system to verify compliance.

The Agency considered the comments and data received and agrees that the provisions in Appendix C of the HON are an acceptable alternative to Method 304 for calculating site-specific biorate constants. However, EPA disagrees with the commenters on the issue of the need to conduct performance testing. While EPA agrees that methanol degrades more rapidly than many compounds, there are other HAPs present in the condensate streams subject to the standards, and biological treatment systems can vary widely in their operation and performance, depending on their design, maintenance, and even their geographical location. As such, the final regulation retains the proposed requirements for performance testing.

EPA also became concerned that allowing the use of methanol as a surrogate for total HAP may not be appropriate for this particular treatment technology. Because methanol is one of the most difficult HAPs to remove with a steam stripper (the technology on which the standards are based), even greater removals of total HAP would occur when a steam stripper is used. Thus, methanol is a reasonable surrogate under such conditions. The opposite is true for biological treatment systems, where methanol is one of the easier HAPs to degrade. As such, the final regulation specifies that a total HAP removal (not just methanol) of 92 percent be achieved by biological treatment systems.

EPA agrees with the commenters that soluble BOD_5 is an appropriate monitoring parameter for biological treatment systems. However, EPA disagrees with the commenters on their position regarding the monitoring of soluble BOD_5 and operating parameters for demonstrating continuous compliance. After discussion with the industry on this issue, EPA has concluded that soluble BOD_5 and operating parameters are the most appropriate means available for monitoring to demonstrate continuous compliance (A–92–40, IV–E–87). EPA understands the concerns raised on this point, and as such the final regulation provides flexibility. The regulation allows mills to establish, through performance testing, their own range of treatment system outlet soluble BOD_5 and operating parameter values to monitor. The final rule also allows owners and operators to demonstrate compliance with the standard using the WATER8 model and inlet and outlet samples from each biological treatment system unit when the specified monitoring parameters are outside of the range established during the initial performance test.

4. Sulfite Standards—Emission Limits for Sulfite Pulping Processes

In the March 8, 1996 supplemental notice (61 FR 9383), the Agency presented potential changes to the proposed standards for sulfite pulping processes. EPA had proposed that all pulping equipment at kraft, sulfite, soda, and semi-chemical processes must be enclosed and routed to a control device achieving 98 percent reduction in emissions. In the March 8 notice, the Agency proposed that the MACT floor level of control at existing sulfite processes was control of vents from the digester system, evaporator system, and pulp washing system. The MACT floor level of control at new sulfite processes would be control of the equipment systems listed for existing sources, plus weak liquor tanks, strong liquor storage tanks, and acid condensate storage tanks. In the March 8 notice, the Agency discussed in detail its preliminary determination that the sulfite standards should instead apply to the total emissions from specific named vents and to any wastewater emissions associated with air pollution control devices used to comply with the rule. For calcium-based sulfite pulping processes, the new proposed emission limit was 0.65 lb methanol/ODTP and the percent reduction was 92 percent. For ammonium-and magnesium-based sulfite pulping processes, the new proposed emission limit was 1.10 lb methanol/ODTP, and the percent HAP reduction was 87 percent. The Agency developed applicability cutoffs based on methanol because only methanol emissions data were obtained for all of the equipment systems and wastewater streams considered for control at sulfite mills. The test data from sulfite mills also indicated that for the equipment systems tested for other HAPs, methanol comprised the majority of HAP emissions. Therefore, the Agency believes that the maximum control of HAP emissions will be achieved by controlling methanol as a surrogate.

Several commenters objected that the proposed emission limits were not appropriate because they were based on data that only indicated possible levels of methanol emissions and not a rigorous assessment of emission rates. The commenters contended that the proposed emission limits were derived from limited data which may not be representative of the range of mills in the industry; therefore, they argued, the limits did not account for variability in emissions and are not achievable. The commenters provided the Agency with emissions test data that illustrated fluctuations in the methanol mass emissions over an extended time period due to variations in products and process conditions.

The Agency evaluated the information provided by the commenters and subsequently agreed with the commenters regarding process variability at sulfite mills. The Agency determined the amount of variability associated with a 99.9 percent confidence level in the data supplied by the commenters (Air Docket A–92–40, IV–B–20). This amount of variability (confidence interval), therefore, was applied to the average emission limits from the best controlled mills to develop the final emission limit.

For ammonium- and magnesium-based sulfite pulping processes, the final emission limit is 1.1 kilograms of methanol per megagram of ODP produced. After the close of the March 8, 1996, **Federal Register** supplemental notice comment period, additional information was provided to the Agency that indicated that the sodium-based sulfite pulping process is in use at some mills (A–92–40, IV–E–94). No emissions information was available for this process. However, the Agency determined, that due to the similarities in processes between calcium- and sodium-based sulfite pulping processes, the same limit developed for calcium-based mills would be applicable to sodium-based mills. For calcium- and sodium-based sulfite pulping processes, the final emission limit is 0.44 kilograms of methanol per megagram of ODP produced. Because the variability is incorporated into the mass emission limit, these emission limits and corresponding monitoring parameters are never-to-be-exceeded values.

5. Soda and Semi-chemical Mill Standards

The proposed standards would have required the owners or operators of new or existing kraft, semi-chemical, soda, and sulfite mills to comply with the same emission standards. In the March 8, 1996 notice, EPA proposed to subcategorize the pulp and paper industry by pulping type and develop different MACT control requirements for soda and semi-chemical mills based

on emission characteristics. Existing soda and semi-chemical mills would be required to control the digester and evaporator systems (LVHC system). New soda and semi-chemical mills would be required to control the LVHC and the pulp washing systems. EPA solicited comments on this proposed change.

Information provided by the pulp and paper industry in survey responses and after proposal confirmed that the MACT floor level of control at existing semi-chemical mills is collection and control of the LVHC system. The Agency determined that it was not reasonable to control other emission points at existing semi-chemical mills (Air Docket A–92–40, IV–B–12). Data indicated that the best-controlled semi-chemical mills combust LVHC system emissions and emissions from pulp washing systems. Therefore, the final rule requires that existing semi-chemical mills control the LVHC system, and new semi-chemical mills control the LVHC and the pulp washing systems.

As discussed in the March 8, 1996 notice, the MACT floor level of control for soda mills is no control. The Agency has determined that HAP emissions from soda mills are similar to kraft mills (with the exception that TRS compounds are not emitted from the soda pulping process) and control of LVHC system vents is technically feasible and can be achieved at a reasonable cost. The Agency has also determined that controlling additional vents at existing sources cannot be achieved at a reasonable cost. However, controlling the pulp washing system at new soda mills can be achieved at a reasonable cost (Air Docket A–92–40, IV–B–12). Therefore, the final rule requires that existing soda mills control the LVHC system, and new soda mills control the LVHC and the pulp washing system.

6. Mechanical Pulping Mill, Secondary Fiber Pulping Mill, Non-wood Fiber Pulping Mill, and Papermaking System Standards

In the March 8, 1996 **Federal Register** notice, EPA proposed standards for pulping and bleaching processes at mechanical pulping mills, secondary fiber pulping mills, and non-wood fiber pulping mills. As discussed in the proposal, EPA believes that there are no air pollution control technologies in use on these processes except for those installed on bleaching systems using chlorine. The March 8 notice proposed no add-on controls for pulping systems (and the associated wastewater), papermaking systems, and nonchlorine bleaching systems for these mills. For traditional bleaching systems using chlorine, the proposed control was based on the performance of caustic scrubbers. The proposal stated that EPA would continue to investigate the use of HAP chemicals in papermaking, the magnitude of HAP emissions, and the viability of chemical substitution to reduce HAP emissions from papermaking systems.

Some commenters questioned EPA's proceeding with the rule in advance of the receipt of additional industry data that was being collected. The commenters cautioned that EPA did not have sufficient data on which to base a rule. Since the March 8, 1996 **Federal Register** proposal, EPA has received the results of the NCASI-sponsored testing program from these sources (A–92–40, IV–J–80 through IV–J–85). These data have been used in the determination of the final standards for these sources in today's rule. EPA has concluded that sufficient data have been collected to include these sources in today's action.

Commenters agreed with EPA's March 8, 1996 proposal for bleaching systems at these mills. Comments on the March 8 proposal supported the conclusion that caustic scrubbers are in use only on chlorine and chlorine dioxide bleaching systems. Furthermore, information available to EPA indicate that non-wood pulping mills typically use chlorine or chlorine dioxide bleaching systems. For chlorine and chlorine dioxide bleaching systems, EPA determined that scrubbers are used to control chlorinated compound emissions for process and worker safety reasons. Thus, the control achieved by this technology represents the floor for chlorine and chlorine dioxide bleaching systems at these mills and is the technological basis for the standard in today's rule. As stated in the December 17, 1993 proposal, EPA analyzed more stringent controls, such as combustion of bleaching vent gases after caustic scrubbing, for bleaching systems at kraft, soda, and sulfite mills. EPA has determined that these more stringent options are unreasonable considering cost and environmental impacts. Because of the operational similarities of the chlorine and chlorine dioxide bleaching systems at non-wood fiber mills to those at kraft, soda, and sulfite mills, EPA has concluded that combustion following caustic scrubbers is also not cost-effective at non-wood fiber mills. In addition, data available to EPA indicate that HAP emissions from chlorine bleaching systems at these mills are relatively low. In fact, the data show that the three largest non-wood pulping mills, of the ten currently in operation, use elemental chlorine in their bleaching systems and total HAP emissions from each of these three mills is less than five tons of total HAP per year (Air Docket A–95–31, IV–B–5).

For chlorine and chlorine dioxide bleaching systems at mechanical pulping mills, secondary fiber pulping mills, and non-wood pulping mills, today's rule requires the same level of control required for bleaching systems at kraft, soda, and sulfite mills. Those requirements are specified in § 63.445 (a)–(c) of today's rule. However, § 63.445 (d) and (e) do not apply to these mills since there are no effluent limitation guidelines for control of chloroform at mechanical, secondary fiber, and non-wood fiber pulping mills. Additional requirements for the control of chloroform emissions, based on the effluent limitation guidelines for best available technology economically achievable, are required in the standards for bleaching systems for kraft, soda, and sulfite mills. However, EPA is not aware of any controls presently in place or available for reducing chloroform air emissions at mechanical, secondary fiber, and non-wood pulping mills. Therefore, MACT is no control for chloroform air emissions from bleaching systems at mechanical, secondary fiber, and non-wood fiber pulping mills.

Since the March 8 proposal, EPA has also determined that while mechanical pulping, secondary fiber pulping, and other non-wood pulping mills do not typically use chlorine or chlorine dioxide bleaching, these mills may brighten the pulp stock through the use of hypochlorite and non-chlorine bleaching compounds. However, data available to EPA indicate that HAP emissions from these systems are relatively low, and that none of the bleaching systems that use hypochlorite and non-chlorine compounds have installed emission controls. Based on these findings, EPA established the MACT floor for bleaching systems at these mills that use hypochlorite and non-chlorine bleaching to be no control. EPA considered going beyond the floor and requiring HAP control through incineration of vent streams for these sources but determined that the minimal level of HAP emission reductions that would be achieved did not justify going beyond the floor (Air Docket A–95–31, IV–B–5).

In the March 8, 1996 **Federal Register** notice, EPA proposed no standards for papermaking systems. The three potential sources of HAP emissions from papermaking systems are HAPs contained in the pulp stock, HAPs contained in the whitewater, and HAPs from additives and solvents. Information available to EPA indicated no papermaking systems are operating with HAP controls; thus the floor level

of control for papermaking systems is no control. EPA evaluated two possible control options for papermaking systems: (1) Removal of HAPs from the pulp stock and whitewater before the papermaking system; and (2) control of papermaking system vent streams. Analysis of these control options showed that there are no demonstrated methods for removing HAPs from the pulp stock or whitewater and that applying HAP control to the vent streams of papermaking systems is not cost-effective (Air Docket A–95–31, IV–B–8). Therefore, EPA is not requiring HAP control beyond the floor.

In the March 8, 1996 notice, EPA indicated that it was investigating the use of HAP-containing additives in papermaking systems, the magnitude of HAP emissions resulting from the use of papermaking system additives, and the viability of a MACT standard based on additive substitution. EPA has concluded that based on emission test reports and a survey conducted on additive use, additives do not contribute significantly to HAP emissions (Air Docket A–95–31, Item IV–B–6). The amount of HAPs contained in additives used by the paper industry for papermaking systems is relatively low, an estimated 236 tpy in 1995. Furthermore, less than 20 percent of HAPs contained in the additives is emitted to the air. About 80 percent of the HAPs remain on the paper or in the whitewater. Consequently, total annual HAP emissions attributable to additives are an estimated 50 tons per year, industry-wide. In comparison to the baseline emission level of 210,000 tons per year of total HAPs from the entire pulp and paper industry, the contribution of HAPs from papermaking system additives is negligible (Air Docket A–95–31, IV–B–6).

In a meeting between EPA and several representatives of the Chemical Manufacturers Association (CMA), CMA stated that members have been working to reduce HAP and solvent use in papermaking system additives over the past 15 years, even in the absence of regulations. Reductions have been achieved and CMA expects these efforts to continue. CMA noted that HAP-free alternatives may not be possible for all types of additives, as some HAPs are critical to product performance. EPA believes that low-HAP additive substitution is product-specific and it is not clear from the available information that substitution options are technically feasible (Air Docket A–95–31, IV–E–5). Therefore, EPA has concluded that a MACT standard for papermaking systems based on low-HAP additive substitution is not warranted.

In the March 8, 1996 notice, EPA proposed no standards for pulping systems at mechanical, secondary fiber, or non-wood fiber pulping mills. Information available to EPA indicated that no pulping systems at these mills are operating with HAP controls. Therefore, EPA has concluded that the floor for pulping systems at these mills is no control. EPA evaluated the feasibility of going beyond the floor and requiring HAP controls for these sources. Specifically, EPA investigated the feasibility of routing vent streams from these pulping systems to a combustion device for HAP control. EPA determined that the cost of combusting the vent streams was not justified by the HAP emission reductions achieved, and that requiring HAP control beyond the floor was not justified. Furthermore, pulping chemical usage, which correlates with HAP emission levels at kraft, semi-chemical, soda, and sulfite pulping mills, is much lower at non-wood fiber and secondary fiber pulping mills and minimal at mechanical pulping mills; thus the potential for HAP emissions is lower (Air Docket A–95–31, IV–B–7).

7. Bleaching System Standards

In the proposed rule, bleaching systems would have been required to control all HAP emissions by 99 percent using a caustic scrubber. In the March 8, 1996 supplemental notice, the Agency revised the proposal for the bleaching system requirements based on information and comments received after proposal. The new data indicated that caustic scrubbing reduces emissions of chlorinated HAP compounds (except chloroform), but does not control non-chlorinated HAP emissions. The Agency determined that no other option was feasible to control non-chlorinated HAPs. EPA has determined that reduction of chloroform emissions through the use of additional, add-on air pollution control technology is cost prohibitive. The only feasible option for controlling chloroform emissions is process modification, such as chlorine dioxide substitution and elimination of hypochlorite use.

In the March 8 notice, the Agency proposed to require chlorinated HAP emissions other than chloroform to be controlled by 99 percent (with chlorine as a surrogate for chlorinated HAP) based on the performance of a caustic scrubber. As an alternative to the percent reduction standard, the Agency also proposed an emission limit of 10 ppmv chlorinated HAP at the caustic scrubber outlet (with chlorine as a surrogate for chlorinated HAP). The Agency also solicited comments on providing a mass emission limit alternative to the percent reduction and the outlet concentration standards.

Commenters on the March 8, 1996 notice supported the changes to the scrubber requirements in the proposed rule. Commenters also expressed concern that bleaching systems with new low-flow vent systems would not be able to meet either the percent reduction or the outlet concentration standards. Therefore, they asserted, these standards would discourage the use of new low-flow bleaching vent technologies. Based on this concern, one commenter advocated a chlorinated HAP mass emission limit for bleaching systems of 0.023 lb of chlorinated HAP (excluding chloroform) per ODTP produced. The commenter claimed that a mass emission limit would not penalize new low-flow bleaching vent systems.

Based on available data, the Agency has concluded that low-flow bleaching vent systems can achieve the 99 percent reduction and the 10 ppmv outlet concentration requirements for total chlorinated HAP (other than chloroform). Based on a review of the information provided by the commenter and the available data on bleaching system emissions, the Agency has concluded that the commenter's recommended mass emission limit of 0.023 lb of chlorinated HAP (excluding chloroform) per ODTP produced is too high. The Agency evaluated the available data used to develop the percent reduction and outlet concentration requirements for bleaching systems (A–92–40, II–I–24). From this evaluation, the Agency determined that a scrubber outlet mass emission rate of 0.001 kg of total chlorinated HAP (other than chloroform) per Mg ODP produced (0.002 lb/ODTP) would provide reductions equivalent to 99 percent reduction standard (A–92–40, IV–B–29). The mass emission limit of 0.001 kg of chlorinated HAP (other than chloroform) per Mg ODP produced represents a mass emission limit achievable by all units that also achieved 99 percent reduction of chlorine. Furthermore, the available data show that some of the scrubbers achieving the 99 percent chlorine reduction standard, and the 10 ppmv outlet concentration limit, were also operating on low-flow bleaching vent systems.

For the final rule, the Agency has provided a mass emission limit option for bleaching systems of 0.001 kg of chlorinated HAP (excluding chloroform) per Mg ODP produced (0.002 lb/ODTP). The Agency maintains that this option

allows more flexibility for sources affected by this rule, does not penalize bleaching systems operating with low-flow technology, and will provide reductions in chlorinated HAP emissions (other than chloroform) equivalent to the 99 percent reduction standard. Therefore, the final rule allows sources to comply with the bleaching system requirements if they achieve an scrubber outlet mass emission limit at or below 0.001 kg of total chlorinated HAP (other than chloroform) per Mg ODP produced. Chlorine may be used as a surrogate for measuring total chlorinated HAP.

After proposal, the Agency also evaluated the effect of process modifications on chloroform emissions. The results of this analysis indicated that the technology basis for MACT control of chloroform is complete chlorine dioxide substitution and elimination of hypochlorite as a bleaching agent. These process modifications were determined to reduce chloroform emissions significantly. At the same time, EPA was proposing complete chlorine dioxide substitution and hypochlorite elimination as the technology bases for the effluent limitations guidelines and standards under Subparts B and E (see 58 FR at 66109–11, 14–15). Since the control technologies that would be installed to comply with effluent limitations guidelines and standards and MACT would likely be the same for these bleached papergrade mills, EPA therefore proposed in the March 8 notice that chloroform air emissions at bleached papergrade mills be controlled by complying with the effluent limitations guidelines and standards applicable to those mills. No adverse comments were received on this proposal.

In the March 8, 1996 notice, the Agency solicited comments on whether an alternative numerical air emission limit for chloroform (i.e., besides complying with the effluent limitations guidelines and standards) was needed. Some commenters contended that a numerical air emissions limit for chloroform would be unnecessary because the effluent limitations guidelines and standards would achieve the requisite reductions. The Agency did not receive any indication of any benefit from a numerical air emission limit for chloroform. Additionally, the Agency did not have sufficient data and did not receive any further data after the March 8 notice to develop a numerical air emission limit (and hence is finding that a numerical standard is not feasible for purposes of CAA § 112(h)). Therefore, the final rule does not include a numerical air emission limit for chloroform (see the proposal at 58 FR 66142 for a discussion on setting MACT standards in a format other than an emission standard). The Agency is, however, providing an alternative compliance mechanism in the form of a work practice standard of complete substitution of chlorine dioxide for elemental chlorine and complete hypochlorite elimination—the technical basis for BAT. (EPA also notes that although the Agency's technical judgment is that compliance with BAT also will result in control of air emissions to reflect the MACT level of control, the Agency will continue to investigate whether this proves correct as the rule is implemented.)

Because MACT for new sources is equivalent to MACT for existing sources, the new source MACT standards for bleaching systems require compliance with BAT/PSES requirements (or implementation of 100 percent substitution and elimination of hypochlorite). This requirement applies even if the mill or bleaching system also meets the definition of new source under the effluent guidelines limitations and standards, and thus is required to meet the more stringent new source effluent requirements of NSPS/PSNS. Although achievement of the NSPS/PSNS may result in installation of technologies that reduce effluent loading beyond what is achieved by 100 percent substitution and elimination of hypochlorite, EPA is not aware that these advanced technologies will provide air emission reductions beyond what the BAT/PSES requirements will achieve.

EPA notes that an affected bleached papergrade mill must comply with the existing source MACT requirements no later than April 16, 2001 even if the mill's existing Clean Water Act NPDES permit does not yet reflect the corresponding effluent limitations guidelines and standards because its existing terms have not expired or it has been administratively extended. Put another way, even if a mill's existing NPDES permit serves as a shield (until reissuance) against imposition of new limits based on new effluent limitations guidelines (see CWA Section 402(k)), the MACT requirement for bleached papergrade mills to control chloroform emissions through compliance with all parameter requirements in the effluent limitations guidelines and standards takes effect to satisfy the requirements of the Clean Air Act. Similarly, if a bleached papergrade mill's NPDES permit is reissued sooner than the expiration of the 3-year compliance schedule authorized for the chloroform MACT requirements and calls for immediate compliance with the BAT limitations, that deadline would prevail. The same principles will apply when effluent limitations guidelines and MACT standards are promulgated for dissolving grade mills. EPA's plans for promulgating MACT standards for these mills are discussed immediately below.

An additional issue relating to compliance dates concerns bleaching systems at existing source papergrade kraft and soda mills which have elected, under the Clean Water Act portion of this rule, to treat wastewater to levels surpassing baseline BAT requirements (such as adding oxygen delignification prior to bleaching, and in some cases, engaging in additional reduction of process wastewater and further reductions in chlorinated bleaching chemicals used and bleaching system modifications than are necessary to meet BAT baseline limitations). As an incentive to make this election, EPA is not requiring participating mills to achieve compliance with the more stringent portions of the "Advanced Technology" BAT limitations for six, eleven, and sixteen years (for Tiers I, II, and III, respectively) in order to afford these mills sufficient time to develop, finance, and install the Advanced Technologies. In light of this, the Agency is concerned that requiring bleached papergrade kraft and soda mills to comply in three years with MACT standards based on process substitution of chlorine dioxide for elemental chlorine would discourage these mills from electing to participate in the Advanced Technology program. This is largely because a mill that implements process substitution before it installs oxygen or other extended delignification systems is likely to construct more chlorine dioxide generating capacity than it ultimately will need. A mill thus compelled to invest first in process substitution may be very reluctant to abandon a portion of that investment soon afterwards in order to participate in the voluntary incentives program.

EPA also believes that requiring compliance in three years with a chloroform MACT standard based on baseline BAT for bleached papergrade kraft and soda mills would present similar disincentives to achieving greater effluent reductions. A mill in those circumstances will have made a substantially larger capital investment than it will need to control chloroform once its array of advanced water technologies is installed. Also, depending on the degree of process modifications the mill makes, the mill may need a much smaller scrubber for

the non-chloroform chlorinated HAPs and, in some cases, a scrubber may not be needed at all to meet the MACT standards for chlorinated HAP concentration limit. Thus, a mill otherwise interested in participating in the Voluntary Advanced Technology Incentives Program will find itself diverting capital to environmental controls that it ultimately will not need, instead of employing that capital to make more advanced process modifications that will benefit both the water and the air.

Under these unusual circumstances where imposition of MACT requirements could likely result in foregoing substantial cross-media environmental benefits, EPA believes that a two-stage MACT compliance scheme is justified for existing sources at bleached papergrade kraft and soda mills that enroll in the water Voluntary Advanced Technology Incentives Program (see 61 FR 9394 for a similar argument relating to compliance with MACT for washers and oxygen delignification systems). The first stage is an interim MACT of no backsliding—which reflects the current level of air emissions control. The second stage requires compliance with revised MACT based on baseline BAT requirements for all parameters for bleached papergrade kraft and soda mills. (The second stage in effect revises MACT to reflect the control technologies which will be available at this later date. See CAA § 112 (d)(6).) The no-backsliding provisions apply to the period from June 15, 1998 until compliance with the second-stage MACT standards is required April 15, 2004. This two-step alternative is available only to bleached papergrade kraft and soda mills actually making the binding decision to comply with Tier I, II, or III water limitations.

EPA believes that providing these mills six years to comply with second-stage MACT (i.e., baseline BAT requirements for all parameters) is an appropriate and logical outgrowth of the discussions set forth in the March 8, 1996 supplemental MACT notice (61 FR 9393) and the July 15, 1996 supplemental effluent guidelines notice (61 FR 36835–58). In the March 8 notice, EPA solicited comments on its preliminary findings that MACT for chloroform air emissions should be compliance with baseline BAT. Commenters agreed with this preliminary determination. In the July 15 notice, EPA set forth its vision of more stringent BAT for mills that voluntarily enter the Advanced Technologies Incentives program. As part of that voluntary program under the water standards, EPA is promulgating a requirement that mills in Tiers II and III, at a minimum, meet all the limitations promulgated as baseline BAT no later than April 15, 2004. See Section IX.A. Thus, more stringent air emission controls than stage one MACT will likewise be available at this time since compliance with these interim BAT limitations will result in compliance with MACT. For Tier II and Tier III mills, this means that the second stage MACT requirement is compliance with the baseline BAT limitations by April 15, 2004. The same is the case for Tier I mills, even though under the water regulation Tier I mills will be required to achieve more stringent limitations at that time. EPA is defining MACT to be the baseline BAT limitations even in this situation because compliance with the more stringent AOX limitations and other requirements unique to Tier I are unnecessary to control chloroform emissions at these mills.

EPA further believes that most plants likely to elect to comply with a tier option already control air emissions of chlorinated HAPs (both chloroform and other chlorinated HAPs) through application of the MACT technologies (process substitution for chloroform and caustic scrubbing for the remaining chlorinated HAPs). Thus, there will be some control of the emissions from these bleaching operations during the time preceding compliance with the second stage of MACT. To ensure that there is no lessening of existing controls, EPA also is promulgating a no backsliding requirement as an interim MACT—reflecting current control levels. During the extended compliance period, mills thus may not increase their application rates of chlorine or hypochlorite above the average rates determined for the three-month period prior to June 15, 1998.

In the March 8 notice, the Agency proposed making a distinction between requirements for bleaching systems at papergrade and dissolving grade mills. The Agency solicited data concerning chloroform emissions from dissolving grade bleaching processes and requested comment on an appropriate chloroform MACT for dissolving grade bleaching systems. Several commenters suggested that a separate MACT standard for chloroform be developed for bleaching systems at dissolving grade mills. Some commenters requested that the Agency defer chloroform control requirements for dissolving grade mills until effluent limitations guidelines and standards are established at those mills.

As stated in the July 15, 1996 **Federal Register** notice (61 FR 36835), EPA is evaluating new data on the technical feasibility of reducing hypochlorite usage and implementing high levels of chlorine dioxide substitution on a range of dissolving grade pulp products. Therefore, EPA is deferring issuing effluent limitations guidelines and standards for dissolving grade mills until the comments and data can be fully evaluated. EPA expects to promulgate final effluent limitations guidelines and standards for dissolving grade subcategories at a later date.

EPA has decided to delay establishing these MACT standards for chloroform and for other chlorinated HAPs for dissolving grade bleaching operations until promulgation of effluent limitations guidelines and standards for those operations, for the following reasons. With respect to the MACT standard for chloroform, first, as explained above and in the March 8 notice, the control technology basis for the effluent limitations guidelines and standards and the MACT requirements will be the same. Second, at present, the Agency is unsure what level of chlorine substitution and hypochlorite use is achievable for dissolving grade mills. Thus, although EPA has a reasonably good idea what the technology basis of MACT and effluent limitations guidelines and standards is likely to be for dissolving grade mills, the precise level of the standards remains to be determined. Consequently, at present, EPA is unable to establish what the MACT floor would be for chloroform emissions from bleaching systems at these mills, and there is no conceivable beyond-the-floor technology to consider. EPA will make these determinations based on data being developed, and then promulgate for these mills effluent limitations guidelines and standards and, concurrently, MACT standards based on those effluent limitations guidelines and standards. Covered mills would therefore be required to comply with the MACT standards reflecting performance of the effluent limitations guidelines and standards no later than three years after the effective date of those standards, pursuant to CAA section 112(i)(3)(A).

The basis for delaying MACT requirements for chlorinated HAPs other than chloroform (again, from dissolving-grade bleach operations only) differs somewhat. As noted above, the technology basis for control of these HAPs is use of a caustic scrubber. However, when plants substitute chlorine dioxide for chlorine and eliminate hypochlorite (in order to control chloroform emissions and discharges to water, as explained above), a different scrubber will be needed that can adequately control both the chlorine dioxide emissions for

worker safety reasons and the emissions of chlorinated, non-chloroform HAPs. The Agency's concern (shared by the commenters who addressed this question) is that immediate control of the non-chloroform chlorinated HAPs could easily result in plants having to install and then replace a caustic scrubber system in a few years due to promulgation of effluent limitations guidelines and standards and MACT requirements for chloroform. This result would be an inappropriate utilization of scarce pollution control resources.

8. Test Methods

At proposal, the Agency proposed to require that Methods 308 and 26A be used to test for compliance with the provisions of the NESHAP. Method 308 is used to measure methanol in the vent stream. Method 308 had not been validated using Method 301 at the time the NESHAP was proposed. Method 26A is used to measure chlorine in vent streams.

At proposal, commenters objected to the rule referencing an unvalidated test method (Method 308). The commenters also contended that Method 26A should not be used for measuring chlorine in the bleaching system because chlorine dioxide, which is expected to be present in bleaching system vents, is listed as a possible interferant in Method 26A. The commenters suggested using a modified Method 26A developed by the pulp and paper industry.

Since proposal, Method 308 was revised to incorporate suggestions made and data provided by representatives of the pulp and paper industry.

Since proposal, Method 308 has also been validated using Method 301 validation criteria. The validation was conducted by the Atmospheric Research and Environmental Analysis Laboratory in EPA's Office of Research and Development. The results of the validation were reported in the January 1995 issue of the *Journal of the Air and Waste Management Association*. The Agency has also evaluated the commenters' claims regarding Method 26A. The Agency agrees that chlorine dioxide is a potential positive interferant to the method (i.e., concentration measurement could potentially be higher than actual emissions). The final rule includes modifications to Method 26A (based on an NCASI method) to eliminate potential problems with chlorine dioxide interference.

In March 1997, industry informed EPA that it had not used Method 305 to obtain the methanol steam stripper performance data (which was used as the basis for the proposed pulping process condensate standards). For the liquid sampling analysis, NCASI used a direct aqueous injection gas chromatography/flame ionization detection (GC/FID) method described in NCASI Technical Bulletin No. 684, Appendix I. Consequently, the industry contends that Method 305 should not be specified in the final rule for determining compliance with the pulping process condensate standards. However, the NCASI test method has not been validated using EPA Method 301 procedures and it is unlikely that the test method validation would be completed before promulgation of the MACT standard.

The Agency has considered industry's argument and has decided to proceed with specifying Method 305 in the final rule to demonstrate compliance with the pulping process condensate standards. However, if the Agency approves the Method 301 validation procedures for NCASI's GC/FID test method, this method will be referenced as either an alternative or a replacement for Method 305 (for determining methanol concentration only) with a supplemental **Federal Register** notice. EPA believes that this course of action will adequately address the industry's concerns. This decision was reached since the Method 301 validation procedures for NCASI's GC/FID method would likely be completed before kraft mills would have to demonstrate compliance with the pulping process condensate standards.

9. Backup Control Devices and Downtime

The proposal would have required emission limits for the NESHAP to be met at all times, except during periods of startup, shutdown, or malfunction. Allowance for control device or collection system downtime was not specified in the proposed rule, and the need for backup control devices was not addressed.

Commenters asserted that EPA should recognize that control technologies on which the proposed rule was based are not designed to operate 100 percent of the time. Therefore, commenters requested downtime allowances to account for safety related venting and periods when the control device is inoperable. Otherwise, the commenters asserted that costly backup control devices would be necessary to achieve compliance with the NESHAP at all times. They further contended that the environmental benefit for the additional cost associated with the backup controls would be minimal. Commenters recommended a one percent downtime for the LVHC system, four percent for the HVLC system, and ten percent for steam stripper systems. Commenters contended that while most of the LVHC systems had backup controls, very few of the HVLC systems had backup controls. Several commenters added that the Part 63 General Provisions do not address safety venting and downtime necessary for trouble-shooting. Another commenter contended that the Part 63 General Provisions already allow significant emissions and should not be further weakened.

Since proposal, EPA has re-evaluated the need to incorporate downtime or excess emission allowances for LVHC, HVLC, and steam stripper systems into the final rule. Based on data submitted by the pulp and paper industry, EPA has concluded that some allowance for excess emissions is part of the MACT floor level of control. For the final rule, EPA established appropriate excess emission allowances to approximate the level of backup control that exists at the best-performing mills and the associated period of time during which no control device is available. The excess emission allowances in the final rule include periods when the control device is inoperable and when the operating parameter values established during the initial performance test cannot be maintained at the appropriate level.

Based on an analysis of the public comments and the available data regarding excess emissions and the level of backup control in the industry, EPA has determined that an appropriate excess emissions allowance for LVHC systems would be one percent of the operating hours on a semi-annual basis for the control devices used to reduce HAP emissions. The best-performing mills achieve a one percent downtime in their LVHC system control devices. For control devices used to reduce emissions from HVLC systems, EPA has concluded that an appropriate excess emissions allowance would be four percent. The best-performing mills achieve a four percent downtime in the control devices used to reduce emissions from their HVLC system to account for flow balancing problems and unpredictable pressure changes inherent in HVLC systems. For control devices used to control emissions from both LVHC and HVLC systems, the Agency has determined that a four percent excess emissions allowance is appropriate. This decision was made because the control device would be used for the HVLC system, which has the higher emissions allowance. For LVHC and HVLC system control devices, the excess emissions allowances do not include scheduled

maintenance activities that are discussed in the Part 63 General Provisions. The allowances address normal operating variations in the LVHC and HVLC system control devices for which the equipment is designed. The variations would not be considered startup, shutdown, or malfunction under the Part 63 General Provisions (Air Docket A–92–40, IV–D1–103, IV–D1–110, IV–D1–115, IV–E–85, and IV–E–88).

The appropriate excess emissions allowance for steam stripper systems was determined to be 10 percent. The allowance accounts for stripper tray damage or plugging, efficiency losses in the stripper due to contamination of condensate with fiber or black liquor, steam supply downtime, and combustion control device downtime. This downtime allowance includes all periods when the stripper systems are inoperable including scheduled maintenance, malfunctions, startups, and shutdowns. The startup, shutdown, malfunction allowances are included in the stripper allowances because information was not available to differentiate these emissions from normal stripper operating emissions.

Regarding the commenters' discussion of whether the startup, shutdown, or malfunction provisions of the General Provisions would cover maintenance and troubleshooting downtime, EPA has taken public comment and is currently revising the requirements of the General Provisions. Among the changes to the language, EPA intends to incorporate safety-related venting requirements into the General Provisions. However, scheduled maintenance activities are not considered by EPA to qualify for excess emissions allowances. The start-up, shutdown, and malfunction plan specified in the General Provisions should address the periods of excess emissions that are caused by unforeseen or unexpected events.

10. Equipment Enclosures, Closed-Vent Systems, and Control Equipment, and Condensate Conveyance System

a. Requirements for Closed-Vent Systems. At proposal, the Agency required specific standards and monitoring requirements for closed-vent systems. The standards required: (1) Maintaining a negative pressure at each opening, (2) ensuring enclosure openings that were closed during the performance test be closed during normal operation, (3) designing and operating closed-vent systems to have no detectable leaks, (4) installing flow indicators for bypass lines, and (5) securing bypass line valves. Monitoring requirements included visual inspections of seal/closure mechanisms and closed-vent systems, and demonstrations of no detectable leaks in the closed-vent system.

Commenters to the proposed NESHAP contended that visual inspections were not necessary due to durability of the materials used by this industry to construct the collection system. In addition, commenters contended that leak detections were not necessary since systems are typically operated at negative pressure. The commenters also opposed requirements for seals and locks on bypass lines because the bypass lines are installed for purposes of personnel safety, equipment protection, and to prevent explosions.

The Agency evaluated the comments and has decided to make the following changes to the closed-vent system requirements. The Agency agreed with the commenters that most closed-vent systems will be under negative pressure. Any leaks, therefore, would pull air into the collection system rather than release HAPs to the atmosphere. Therefore, the Agency revised the requirement for demonstration of no detectable emissions to apply only to portions of the closed-vent system operated under positive pressure. The Agency also agreed that requiring a lock and key-type seal on bypass lines would be overburdensome and could potentially pose a safety hazard. The intention of the requirements was to prevent circumvention of the control device by venting directly to the atmosphere. The Agency believes that this assurance can be achieved using car seals or seals that could easily be broken, to indicate when a valve has been turned. Proper recordkeeping is also necessary to demonstrate proper operation. Therefore, the Agency revised the bypass line requirements to allow the use of car seals but require log entries recording valve position, flow rate, and other parameters. The Agency has modified the enclosure requirements to allow for short-term openings for pulp sampling and maintenance.

The final rule retains the visual monitoring requirements. The requirements are necessary to ensure proper operation of collection systems and can be conducted at a reasonable cost.

b. Concentration Limit for Combustion Devices and Design Incinerator Operating Parameters. At proposal, the NESHAP would have required vent streams to be controlled in a combustion device that achieves 98 percent reduction of HAPs or outlet HAP emission concentrations of 20 ppmv corrected to three percent oxygen. Alternatively, mills could comply with the control requirements by routing vent streams to a design incinerator operating at 1,600 °F and a residence time of 0.75 seconds, or to a boiler, lime kiln, or recovery furnace.

Commenters on the proposed rule objected to the 20 ppmv limit at a three percent oxygen correction factor. Some commenters claimed that incinerator exhaust streams in the pulp and paper industry have an oxygen content in excess of 10 percent. Therefore, if the outlet concentration was corrected to three percent oxygen, the concentration level would not be achievable. Some commenters recommended increasing the correction factor to 10 percent oxygen.

The 20 ppmv limit represents the performance that is achieved on low concentration streams by a well designed combustion device. This limit was based on previous EPA studies (Air Docket A–79–32, II–B–31). The three percent oxygen correction factor at proposal was based on stream characteristics of other industries, such as the synthetic organic chemical manufacturing industry. The three percent correction factor has been used on many previous standards for controlling organic pollutants. EPA re-evaluated the three percent correction factor to ensure that it is appropriate for the pulp and paper industry. Test data supplied by the industry confirmed their comments that the oxygen content of the incinerator flue gas is typically greater than ten percent at pulp and paper mills. Based on the industry data and the thermodynamic models, EPA changed the oxygen correction factor to ten percent (Air Docket A–92–40, IV–B–19). Therefore, the final rule allows combustion devices to be in compliance if they reduce HAP concentrations to 20 ppmv at ten percent oxygen. Information supplied by the pulp and paper industry indicates that many of the existing incinerators meet this limit.

Commenters on the proposed rule objected that the requirements for the design incinerator were too stringent and that equivalent control could be achieved at lower temperatures. Many commenters requested that the Agency allow incinerators meeting the operating conditions in the kraft NSPS of 1,200 °F and 0.5 seconds residence time to be used for the NESHAP.

EPA has decided not to change the proposed design incinerator operating parameters for the NESHAP because the parameters are necessary to meet the MACT floor. EPA would first like to clarify that the final rule does not limit owners or operators of incinerators to operate at the specified temperatures and residence times. Any control device

that is demonstrated to achieve 98 percent destruction of HAPs will comply with the rule. Any thermal oxidizer which reduces HAP emissions to a concentration of 20 ppmv at ten percent oxygen will also comply with the rule. The 98 percent destruction requirement represents the control level achieved by well-operated combustion devices. The 20 ppmv limit represents the performance achieved by well-operated combustion devices on low concentration vent streams.

Second, EPA has made this part of the rule as flexible as possible while still achieving a level of control reflecting MACT. In the December 17, 1993 proposal and in this final rule, EPA developed compliance alternatives in order to reduce the compliance testing burden. The compliance alternatives (i.e., operating thermal oxidizers at a temperature of 1,600 °F and a residence time of 0.75 seconds) were developed to ensure that the thermal oxidizers perform at a level that would meet the destruction efficiency requirements. The operating parameters are based on previous Agency studies that show that these conditions are necessary to achieve 98 percent destruction of HAPs. However, the NSPS operating parameters (1,200 °F and 0.5 seconds residence time) do not destroy HAPs to this extent.

The purpose of the kraft NSPS was to reduce emissions of TRS compounds. EPA has evaluated the temperature and residence time required by the NSPS to determine whether the NSPS temperature and residence time are sufficient to achieve 98 percent reduction of HAPs. EPA's analysis indicates that while the NSPS requirements are sufficient to achieve 98 percent destruction of TRS compounds, kinetic calculations for methanol (the majority of HAP in pulping vent gases) show that the NSPS criteria will not achieve 98 percent reduction of HAPs (Air Docket A–92–40, IV–B–18). Additionally, EPA evaluated incinerator performance data submitted by industry (Air Docket A–92–40, IV–J–33). The data indicated that the NSPS operating parameters were not sufficient for achieving 98 percent destruction of methanol. This conclusion was reached by EPA since the operating conditions (i.e., temperature and residence time) of the incinerators that achieved 98 percent methanol destruction were greater than the levels specified in the kraft NSPS. Therefore, the NSPS specifications will not meet the requirements of MACT for new and existing sources.

c. Condensate Collection System. In the December 17, 1993 proposal, EPA proposed to require pulping process condensate collection systems to be designed and operated without leaks. EPA proposed that all tanks, containers, and surface impoundments storing applicable condensate streams were required to be enclosed and all vent emissions must be routed to a control device by means of a closed-vent system. A submerged fill pipe would have been required on containers and tanks storing an applicable condensate stream or any stream containing HAP removed from a condensate stream. All drain systems that received or managed applicable condensate streams would have been required to be enclosed with no detectable leaks and any HAP emissions from vents were required to be routed to a control device. Several commenters on the proposed pulp and paper NESHAP contended that the proposed requirements were overly burdensome and, in some cases, unnecessary.

After the pulp and paper NESHAP was proposed, the Agency promulgated a separate rulemaking in 40 CFR Part 63, Subpart RR (National Emission Standards for Individual Drain Systems). This rule established emission control, inspection and monitoring, and recordkeeping and reporting requirements for individual drain systems. The individual drain system requirements specify that air emissions from collection systems must be controlled using covers or seals, hard-piping, or venting of individual drain systems through a closed-vent system to a control device or a combination of these control options. The emission control techniques specified in the individual drain system standard (i.e., covers/seals and vent combustion) are common techniques that are applicable to a variety of wastewater collection systems, regardless of the type of process that produced the wastewater streams.

EPA compared the collection system requirements contained in the proposed pulp and paper NESHAP with the individual drain system requirements in subpart RR. Since the subpart RR requirements are consistent with the intent of the proposed standards, EPA concluded that the requirements of subpart RR constitute MACT for the pulp and paper industry. The control costs presented in the "Pulp, Paper, and Paperboard Industry-Background Information for Promulgated Air Emission Standards, Manufacturing Processes at Kraft, Sulfite, Soda, Semi-Chemical, Mechanical, and Secondary and Non-wood Fiber Mills, Final EIS"(EPA–453/R–93–050b) were based on industry estimates for hard-piping systems. The Agency has concluded that these costs would be the same or greater than would be needed for complying with the requirements of subpart RR.

The final pulp and paper NESHAP references 40 CFR Subpart RR for the standards for individual drain systems for the pulping process condensate closed collection system. The Subpart RR standards provide uniform language that simplifies compliance and enforcement.

The final rule requires tanks to be controlled as at proposal, but containers and surface impoundments are not required to be controlled. Public comments indicated that containers are not used in the pulp and paper industry. The Agency's intention in the proposed rule was not to require surface impoundments to be controlled, except when used as part of the condensate collection system. After further review of this issue, the Agency has determined that mills do not use and are unlikely to use surface impoundments as part of their closed collection system for condensate streams and therefore that the language on control of surface impoundments does not need to appear in the rule.

11. Interaction With Other Rules

a. Prevention of Significant Deterioration/New Source Review (PSD/NSR). To comply with the MACT portion of the pulp and paper cluster rule, mills will route vent gases from specified pulping and condensate emission points to a combustion control device for destruction. The incineration of these gases at kraft mills has the potential to generate sulfur dioxide (SO_2) and, to a lesser degree, nitrogen oxides (NO_X). The emission increases of SO_2 and NO_X may be of such magnitude to trigger the need for preconstruction permits under the nonattainment NSR or PSD program (hereinafter referred to as major NSR).

Industry and some States have commented extensively that in developing the rule, EPA did not take into account the impacts that would be incurred in triggering major NSR. Commenters indicated that major NSR would: (1) Cost the pulp and paper industry significantly more for permitting and implementation of additional SO_2 or NO_X controls than predicted by EPA; (2) impose a large permitting review burden on State air quality offices; and (3) present difficulties for mills to meet the proposed NESHAP compliance schedule of 3 years due to the time required to obtain a preconstruction permit. Industry commenters have stated that the pollution control project

(PCP) exemption allowed under the current PSD policy provides inadequate relief from these potential impacts and recommended including specific language in the pulp and paper rule exempting MACT compliance projects from NSR/PSD.

In a July 1, 1994 guidance memorandum issued by EPA (available on the Technology Transfer Network; see "Pollution Control Projects and New Source Review (NSR) Applicability" from John S. Seitz, Director, OAQPS to EPA Regional Air Division Directors), EPA provided guidance for permitting authorities on the approvability of PCP exclusions for source categories other than electric utilities. In the guidance, EPA indicated that add-on controls and fuel switches to less polluting fuels qualify for an exclusion from major NSR. To be eligible to be excluded from otherwise applicable major NSR requirements, a PCP must on balance be "environmentally beneficial," and the permitting authority must ensure that the project will not cause or contribute to a violation of a national ambient air quality standard (NAAQS) or PSD increment, or adversely affect visibility or other air quality related values (AQRV) in a Class I area, and that off-setting reductions are secured in the case of a project which would result in a significant increase of a non-attainment pollutant. The permitting authority can make these determinations outside of the major NSR process. The 1994 guidance did not void or create an exclusion from any applicable minor source preconstruction review requirements in an approved State Implementation Plan (SIP). Any minor NSR permitting requirements in a SIP would continue to apply, regardless of any exclusion from major NSR that might be approved for a source under the PCP exclusion policy.

In the July 1, 1994 guidance memorandum, EPA specifically identified the combustion of organic toxic pollutants as an example of an add-on control that could be considered a PCP and an appropriate candidate for a case-by-case exclusion from major NSR. For the purposes of the pulp and paper MACT rule, EPA considers that combustion for the control of HAP emissions from pulping systems and condensate control systems to be a PCP, because the combustion controls are being installed to comply with MACT and will reduce emissions of hazardous organic air pollutants. EPA also considers the reduction of these pollutants to represent an environmental benefit. However, EPA recognizes that the incidental formation of SO_2 and NO_X due to the destruction of HAPs will occur. Consistent with the 1994 guidance, the permitting authority should confirm that, in each case, the resultant emissions increase would not cause or contribute to a violation of a NAAQS, PSD increment, or adversely affect an AQRV.

The EPA believes that the current guidance on pollution control projects adequately provides for the exclusion from major NSR of air pollution control projects in the pulp and paper industry resulting from today's rule. Such projects would be covered under minor source regulations in the applicable state implementation plan (SIP), and permitting authorities would be expected to provide adequate safeguards against NAAQS and increment violations and adverse impacts on air quality related values in Federal Class I areas. Only in those cases where potential adverse impacts cannot be resolved through the minor NSR programs or other mechanisms would major NSR apply.

The EPA recognizes that, where there is a potential for an adverse impact, some small percentage of mills located near Class I PSD areas might be subject to major NSR, i.e., the permitting authority determines that the impact or potential impact cannot be adequately addressed by its minor NSR program or other SIP measures. If this occurs, there is a question whether MACT and NSR compliance can both be done within the respective rule deadlines. EPA believes, however, that the eight year compliance deadline provided in the final MACT rule for HVLC kraft pulping sources substantially mitigates the potential scheduling problem. The equipment with the eight year compliance deadline are the primary sources of the additional SO_2 and NO_X emissions. The additional time should be sufficient to resolve any preconstruction permitting issues.

While the Agency believes that eight years is sufficient for kraft mills with HVLC systems to meet permitting requirements, industry has raised concerns that there could be a potential problem for a few mills in Class I attainment areas that are required to comply with the final rule in three years. The PCP exemption and extended compliance schedule may not resolve all NSR conflicts for every mill. Although too speculative to warrant disposition in this rule, EPA is alert to this potential problem and will attempt to create implementation flexibility on a case-by-case basis should a problem actually occur.

Commenters requested that the PCP exclusion also be expanded to actions undertaken at mills that enroll in the Voluntary Advanced Technology (AT) Incentives Program in the effluent limitations guidelines and standards portion of today's rule. In the July 23, 1996 notice on changes to the NSR Program (61 FR 38250), EPA solicited comments on the appropriate scope of the PCP exclusion. EPA also solicited comments in the July 15, 1996 supplemental pulp and paper effluent guidelines notice (61 FR 36857) on whether advanced water pollution control technologies implemented by the pulp and paper industry should be eligible for an exclusion from major NSR and if so, whether the exclusion should be implemented under the provisions of the PCP exclusion under the NSR proposed regulations. In the context of these notices, EPA received several comments in favor of extending the PCP exclusion to multi-media activities, such as those that would be undertaken for the Voluntary Advanced Technology Incentives Program but received little information on appropriate criteria for determining the relative benefits of reduced water pollution to potential coincident increases in air pollution.

The Agency believes that, depending on the control technologies selected by a mill, the potential exists for an overall environmental benefit to result from control strategies implemented under the Voluntary Advanced Technology Incentives Program. However, unlike the MACT rule in today's action, where the controls that would be installed to reduce hazardous air pollutants are fairly well known and the potential pollutant tradeoffs within the same environmental media are fairly well understood, the Agency is less certain about the controls that might be installed to comply with this Voluntary Advanced Technology Incentives Program and the potential pollutant tradeoffs that may occur across environmental media. Therefore, while the Agency is continuing to consider extending this PCP status to activities undertaken to implement the Voluntary Advanced Technology Incentives Program, the Agency is not extending that status in today's action because the Agency currently lacks sufficient information to establish a process and set of criteria by which a determination could be made as to whether these advanced control technologies result in an overall environmental benefit at individual mills that participate in this program. The Agency intends to continue discussions with stakeholders on a process and set of criteria by which a determination could be made as to the appropriateness of extending the PCP exclusion to controls installed at

individual mills to comply with the Voluntary Advanced Technology Incentives Program. Because the control technologies that could be installed to implement the Voluntary Advanced Technology Incentives Program may vary significantly from one mill to another, mills that want controls implemented within the context of the Voluntary Advanced Technology effluent program to be considered PCP will likely need to make a site-specific demonstration that such controls result in an overall environmental benefit. When a mill would need to make such a demonstration would depend upon that particular mill's compliance timeline—dictated by the AT Incentives Tier to which they commit and the time necessary to get applicable permits approved. While it is not possible at this time to identify the criteria the Agency would use for approving a PCP exclusion, the Agency would not consider projects which result in any increases in emissions of highly toxic compounds to be an acceptable candidate PCP. For example, the Agency believes it would not be environmentally acceptable to give the PCP exclusion to an activity which results in a chlorinated material being sent to a boiler that would result in the release of a chlorinated toxic air pollutant. The Agency also believes that the public should be provided an opportunity to review and comment on mill-specific cases where a PCP exclusion is being considered for these advanced water technologies, particularly if there would be a potentially significant emissions increase of criteria air pollutants such as SO_2 or NO_X.

Since mills must declare within one year of promulgation of the cluster rules whether they will participate in the Voluntary AT Incentives Program, the Agency is aware that mills would like to know whether a mechanism exists whereby they may apply for a PCP exclusion among the many factors that may influence their participation in this incentives program. In order for the Agency to proceed further on this issue, the Agency again is requesting that interested stakeholders submit information on the types of control technologies that could be installed under the Voluntary AT Incentives Program along with information on the type and potential magnitude of collateral air pollutant increases that may occur at mills. The Agency requests information from stakeholders that could be useful for developing a process by which mills would apply for the PCP exclusion and for setting forth criteria for determining whether an activity performed under the Voluntary AT Incentives Program qualifies for the PCP exclusion. Given the potentially varying control strategies that could be adopted by participating mills, the Agency also requests information that may be useful in assessing whether generic guidance on when a PCP exclusion may be appropriate should be set forth within the context of the NSR Reform effort or whether NSR determinations should more appropriately be made in the context of mill-specific applications. The EPA needs this information within 60 days of the publishing of this notice to evaluate the information and proceed with this issue in a useful time period for mills to make their decisions on participation in the Voluntary AT Incentives Program. Stakeholders should submit information on this topic directly to Ms. Penny Lassiter, Emission Standards Division (MD–13), U.S. Environmental Protection Agency, Research Triangle Park, NC 27711.

b. Resource Conservation and Recovery Act (RCRA)/Boilers and Industrial Furnaces (BIF). One of the options for controlling emissions from pulping process condensates is to steam strip HAPs, primarily methanol, from kraft pulping process condensate streams. After the HAPs are removed, the vent gas from the steam stripper is required to be sent to a combustion device for destruction. Several commenters pointed out that some mills may choose to concentrate the methanol in the steam stripper vent gas, using a rectification column, and burn the condensate as a fuel.

However, the concentrated methanol condensate that would be derived from the steam stripper overheads may be identified as hazardous waste under the Resource Conservation and Recovery Act (RCRA) because it exhibits the ignitability characteristic. See 40 CFR 261.21. Boilers burning such a hazardous waste fuel would ordinarily be required to comply with emission standards set out in 40 CFR Part 266 Subpart H (the so-called BIF regulation, i.e., standards for boilers and industrial furnaces burning hazardous waste). Several commenters recommended incorporating a "clean fuels" exclusion into the pulp and paper NESHAP so that the condensate can be burned for energy recovery without the combustion unit also being subject to the RCRA rules. The "clean fuels" exclusion is a recommendation from EPA's Solid Waste Task Force to allow recovery of energy from waste-derived fuels that are considered hazardous only because they exhibit the ignitability characteristics and do not contain significant concentrations of HAP. For background information see 61 FR at 17459–69 (April 19, 1996), where EPA proposed such an exclusion based on similarity of waste-derived fuels to certain fossil fuels.

The Agency proposed to exclude this practice from RCRA regulation in the March 8, 1996 notice and solicited comments on this determination (61 FR at 9396). All of the comments supported granting this exemption. As stated in the notice, EPA does not believe that RCRA regulation of the rectification and combustion of the condensate is appropriate or necessary. The rectification practice would not increase environmental risk, would reduce secondary environmental impacts, and would provide a cost savings. Moreover, the burning of condensate will not increase the potential environmental risk over the burning of the steam stripper vent gases prior to condensation. (See generally 61 FR at 9397.) Finally, consideration of risk would more appropriately be handled as part of the section 112(f) residual risk determination required for all sources after implementation of MACT standards. For these reasons, EPA will exclude specific sources at kraft mills that burn condensates derived from steam stripper overhead vent gases from RCRA, including condensates from the steam stripper methanol rectification process. The scope of this exclusion is limited to that requested by commenters, combustion at the facility generating the stream. (Limitation of the scope of the exclusion to on-site burning also eliminates questions about whether RCRA regulation is needed to assure proper tracking and transport of the material.)

B. Effluent Limitations Guidelines and Standards

1. Subcategorization

The subcategorization scheme being promulgated today for effluent limitations guidelines and standards for the pulp, paper, and paperboard industry replaces the subcategorization of this industry that dates back to 1974. EPA's reasons for combining and reorganizing the 26 old subcategories (formerly found in Parts 430 and 431) into 12 new subcategories are set forth below, in the proposal, see 58 *FR* at 66098–100, and in "Selected Issues Concerning Subcategorization" (DCN 14497, Volume 1).

In reorganizing Part 430 to comport with the new subcategorization scheme, EPA has reprinted in their entirety the current effluent limitations guidelines and standards applicable to the newly

formed subcategories. The only substantive changes to the current effluent limitations guidelines and standards are the BAT limitations, NSPS, PSES, PSNS, and best management practices being promulgated today for the Bleached Papergrade Kraft and Soda subcategory (subpart B) and the Papergrade Sulfite subcategory (subpart E). In addition, EPA is promulgating the Voluntary Advanced Technology Incentives Program applicable to subpart B. EPA is making no changes to the BPT and BCT limitations previously promulgated for what are now subparts B and E. Similarly, EPA is retaining the NSPS promulgated in 1982 in new Subparts B and E for new sources that commenced discharge that met the 1982 NSPS after June 15, 1988 but before June 15, 1998 provided that the new source was constructed to meet those standards. EPA is also retaining, without substantive revision, the new source pretreatment standards previously promulgated for subparts B and E for facilities constructed between June 15, 1988 and June 15, 1998.

These limitations and standards are recodified at subparts B and E in the form of segments corresponding to the old subcategorization scheme. (In re-codifying these limitations and standards, EPA has simplified the text introducing the limitations tables, but has not changed the former regulations' substance.) Direct discharging mills currently subject to the 1982 NSPS remain subject to those standards until the date ten years after the completion of construction of the new source or during the period of depreciation or amortization of such facility, whichever comes first. See CWA section 306(d). After such time, the BAT limitations promulgated today apply for toxic and nonconventional pollutants. Limitations on conventional pollutants will be based on the formerly promulgated BPT/BCT limitations corresponding to the BPT/BCT segment applicable to the discharger or on the 1982 NSPS for conventional pollutants, whichever is more stringent.

EPA is making no substantive changes to the limitations and standards applicable to any other subcategory. EPA will promulgate new or revised effluent limitations guidelines and standards, as appropriate, for the remaining subcategories at a later date. See Table II–2. Until then, the previously promulgated effluent limitations guidelines and standards remain in effect.

EPA is making one non-substantive revision in each subpart. Where the existing regulation includes a narrative statement describing the procedure to calculate the effluent limitations guidelines and standards for non-continuous dischargers, e.g., 40 CFR 430.13, 430.15, 430.62(a)–(d), 430.65 (1996 ed.), EPA has performed the calculations and presented the results in tables. The resulting effluent limitations and standards are the same; this procedure was done simply to streamline the regulation and to make it easier to apply for the permit writer.

In order to ensure that any facilities that would not have been subject to the previous subparts will not inadvertently be subject to limitations and standards set forth in the newly redesignated subparts, EPA is using the applicability language of each previously promulgated subpart to define the applicability of the newly redesignated subparts that consolidate them. For example, rather than promulgate the applicability statement proposed for subpart C, see 58 FR at 66199, EPA has instead codified as a single applicability statement, the applicability statements of former subparts A, D and V, which new subpart C now comprises. See 40 CFR 430.30.

The Agency received comments that the groupings comprising the new subcategories are unreasonable because they purportedly ignore distinctions among facilities that affect their ability to implement the technologies that form the basis of the effluent limitations guidelines and standards promulgated for subparts B and E. Thus, some commenters asserted, these facilities would be unable to meet the same limits as other mills in the same new subcategory. EPA considered these comments in detail where they involved mills subject to new effluent limitations guidelines and standards promulgated today in order to determine whether the groupings of the mills into subparts B and E were appropriate. In response to these comments, EPA segmented subpart E. See section VI.B.6.a. When EPA develops the final regulations for the remaining subcategories, EPA similarly will consider if it is appropriate to fine-tune these initial groupings to better respond to material differences between facilities.

EPA also acknowledges that the subcategorization scheme promulgated today was developed based on data received in the "1990 National Census of Pulp, Paper, and Paperboard Manufacturing Facilities," and that there have been changes in the industry since that data gathering effort. Because the resubcategorization has no substantive effect on any mill other than those with production in subparts B and E (for whom revised effluent limitations guidelines and standards are promulgated today), EPA believes that changes in the industry affecting the remaining subparts are best addressed when EPA makes the decision whether to revise the regulations for those subcategories.

a. Bleached Papergrade Kraft and Soda subcategory. The Bleached Papergrade Kraft and Soda subcategory, for which regulations are promulgated in this rulemaking at 40 CFR part 430 subpart B, encompasses the former subparts G (market bleached kraft), H (BCT bleached kraft), I (fine bleached kraft), and P (soda). EPA has retained the applicability statements associated with those former subparts. See 40 CFR 430.20. EPA intends for this merged subcategory to apply to mills that chemically pulp wood fiber using a kraft method with an alkaline sodium hydroxide and sodium sulfide cooking liquor to produce bleached papergrade pulp and/or bleached paper/paperboard. It also applies to mills that chemically pulp wood fiber using a soda method with an alkaline sodium hydroxide cooking liquor. Principal products of bleached kraft wood pulp include papergrade kraft market pulp, paperboard, coarse papers, tissue papers, uncoated free sheet, and fine papers, which include business, writing, and printing papers. Principal products of bleached soda wood pulp are fine papers, which include printing, writing, and business papers, and market pulp.

b. Papergrade Sulfite subcategory. The Papergrade Sulfite subcategory, for which regulations are promulgated in this rulemaking, is defined as 40 CFR part 430 subpart E and encompasses former subpart J (papergrade sulfite-blow pit wash) and subpart U (papergrade sulfite-drum wash). EPA has retained the applicability statements associated with those former subparts. See 40 CFR 430.50. EPA intends for this merged subcategory to apply to mills that chemically pulp wood fiber using a sulfite method, with or without brightening or bleaching, using an acidic cooking liquor of calcium, magnesium, ammonium, or sodium sulfites to produce bleached papergrade pulp and/or bleached paper/paperboard. The provisions of this merged subpart apply regardless of whether blow pit pulp washing techniques or vacuum or pressure drum pulp washing techniques are used.

2. BPT/BCT for the Bleached Papergrade Kraft and Soda Subcategory and the Papergrade Sulfite Subcategory

a. Background. EPA proposed to revise effluent limitations for the conventional pollutants biochemical

oxygen demand (BOD_5) and total suspended solids (TSS) based on the best practicable control technology currently available (BPT) for all of the proposed subcategories, including Bleached Papergrade Kraft and Soda and Papergrade Sulfite. As presented in the proposal, 58 *FR* at 66105, EPA highlighted several controversial issues concerning the BPT limitations, their calculation, and their interpretation. EPA also presented a rationale and methodology and identified related controversies for establishing limitations based on the best conventional pollutant control technology (BCT).

b. BPT. In December 1993, the Agency proposed to revise BPT for conventional pollutants for subparts B and E and specifically solicited comment on that proposed decision. See 58 FR at 66105–06. In response, EPA received comments claiming that EPA lacks the legal authority to revise BPT once BPT effluent limitations guidelines have been promulgated. EPA also received other comments asserting that the Clean Water Act compels EPA to revise BPT. Although the Agency believes that it has the statutory authority to revise BPT, the Agency also believes that it has the discretion to determine whether to revise BPT effluent limitations guidelines in particular circumstances. The question of EPA's legal authority is not relevant here, however, because EPA has decided, in the exercise of its discretion, that it is not appropriate to revise BPT effluent limitations guidelines for conventional pollutants for subparts B and E at this time. Instead the current BPT effluent limitations guidelines for conventional pollutants will continue to apply to these subcategories.

EPA bases this decision on its determination that the total cost of applying the proposed BPT model technology is disproportionate in this instance to the effluent reduction benefits to be achieved. See CWA section 304(b)(1)(B). When setting BPT limitations, EPA is required under section 304(b) to perform a limited cost-benefit balancing to make sure that costs are not wholly out of proportion to the benefits achieved. See, e.g., *Weyerhaeuser Co.* v. *Costle,* 590 F.2d 1011 (D.C. Cir. 1978). It therefore follows that EPA is authorized to perform such balancing when determining whether to revise existing BPT limitations.

Mills in subparts B and E have significantly reduced their loadings of BOD_5 and TSS since promulgation of the current BPT effluent limitations guidelines in 1977. Although additional removals could be achieved if BPT were revised, EPA has determined for subpart B and, separately, for subpart E that the costs of achieving that incremental improvement beyond either the current BOD_5 and TSS limitations or the current long term average for BOD_5 and TSS are disproportionate to the benefits. A single mill might have to spend as much as $17.4 million in order to upgrade to advanced secondary treatment. See the Supplemental Technical Development Document, DCN 14487. These expenditures are particularly significant when one considers the cumulative costs of this rulemaking. Therefore, EPA has decided not to revise BPT limitations for conventional pollutants for mills in the Bleached Papergrade Kraft and Soda subcategory and the Papergrade Sulfite subcategory at this time.

EPA's decision not to revise BPT limitations for subpart B at this time is also informed by the Agency's long-term goal for this industry: that the industry will continuously improve its environmental performance primarily through sound capital planning and expenditures. EPA has determined that this interplay between potentially more stringent revised BPT limitations and the industry's long-term environmental improvement is an appropriate factor to be considered in this rulemaking with respect to BPT. See CWA section 304(b)(1)(B). It is also consistent with the Clean Water Act's overarching objective, which calls upon EPA to implement the statute's provisions with the goal of eliminating the discharge of pollutants into the Nation's waters. See CWA Section 101(a). In this rulemaking, EPA has determined that the baseline regulatory requirements—effluent limitations guidelines and standards and air emissions standards—are only one component of the framework to achieve long-term environmental goals. EPA believes that the mills of the future will approach closed loop operations, thus achieving minimal impact on the aquatic environment. To promote this, EPA is promulgating an incentives program to encourage subpart B mills to implement pollution prevention leading to the mill of the future. See Section IX.

EPA believes that near-term investments to achieve more stringent BPT effluent limitations for conventional pollutants would divert limited resources away from environmentally more preferable investments in advanced pollution prevention technologies. Thus, EPA is concerned that revising BPT effluent limitations guidelines at this time could discourage mills from achieving even greater environmental results through the Voluntary Advanced Technology Incentives Program. Moreover, EPA estimates that, even without revising BPT limitations for subpart B, loadings of BOD_5, for example, will decline by approximately 20 percent when mills meet the baseline BAT limitations and best management practices requirements promulgated today. Incidental removals are even greater for subpart B mills implementing more advanced technologies (e.g., loadings of BOD_5 are estimated to decline by approximately 30 percent at the Tier I level, and EPA expects substantially greater reductions from Tiers II and III). See Table IX–1. EPA also expects comparable TSS loading reductions to occur. See the Voluntary Advanced Technology Incentives Program Technical Support Document, DCN 14488. In short, because sufficient additional removals of conventional pollutants from subpart B mills can be obtained without revising BPT at this time, EPA has determined that, on balance, the incremental benefits attributable to revised BPT limits do not justify the comparatively high costs associated with achieving those limits. For these additional reasons, EPA has decided not to revise BPT for conventional pollutants for mills in the Bleached Papergrade Kraft and Soda subcategory at this time.

Finally, if additional removals of BOD_5 and TSS are needed to protect particular receiving waters, CWA section 301(b)(1)(C) requires mills on a case-by-case basis to meet more stringent limitations as necessary to achieve applicable water quality standards.

For the foregoing reasons, therefore, EPA has decided, in the exercise of its discretion, that it is not appropriate to revise BPT limitations for conventional pollutants for subparts B and E at this time. Rather, the BPT effluent limitations guidelines promulgated for former subparts G, H, I, and P (now Bleached Papergrade Kraft and Soda subcategory, subpart B) and former subparts J and U (now Papergrade Sulfite subcategory, subpart E) remain in effect. These limitations are recodified at subparts B and E in the form of segments corresponding to the old subcategorization scheme. See 40 CFR 430.22 and 430.52.

c. BCT Methodology. In considering whether to promulgate revised BCT limits for subparts B and E, EPA considered whether there are technologies that achieve greater removals of conventional pollutants than the current BPT effluent limitations guidelines, and whether those technologies are cost-reasonable according to the BCT cost test. At

proposal, EPA presented two alternative methodologies for developing BCT limitations. The first assumed that BPT limits would be revised in the final rulemaking; the alternative analysis was based on the assumption that BPT limits would not be revised. See 58 FR at 66106–07. The principal difference between the two methodologies involved the BPT baseline that EPA would use to compare the incremental removals and costs associated with the candidate BCT technologies. Because the Agency is not revising BPT, EPA used the second alternative to determine whether to revise the current BCT limits for subparts B and E.

d. BCT Technology Options Considered. For the Bleached Papergrade Kraft and Soda subcategory, EPA identified two candidate BCT technologies for the final rule. These were: (i) The technology required to perform at the level achieved by the best 90 percent of mills in the subcategory; and (ii) the technology required to perform at the level achieved by the best 50 percent of mills in the subcategory.

The Papergrade Sulfite subcategory was not divided into segments for the purpose of conducting a BCT analysis because EPA found that treatability of BOD_5 and TSS in the wastewater generated by the three segments does not differ. EPA identified one candidate BCT technology for the Papergrade Sulfite subcategory. This was the technology required to perform at the average level achieved by three mills in the subcategory with at least 85 percent of their production in the segment. Development of candidate BCT technology options based on the best 90 and 50 percent of mills, which EPA used for the Bleached Papergrade Kraft and Soda subcategory, is not appropriate for this subcategory because there are only 11 mills in this subcategory and only four of these have at least 85 percent of their production in the subcategory. The wastewater treatment performance of three of these mills was determined to reflect BCT level performance for the Papergrade Sulfite subcategory. EPA did not consider the wastewater treatment performance of the fourth mill to be representative of the subcategory as a whole because it treats wastewater from liquor by-products manufactured on site, and thus is unique among papergrade sulfite mills.

e. Results of BCT Analysis. EPA evaluated the candidate BCT technologies for both the Bleached Papergrade Kraft and Soda subcategory and the Papergrade Sulfite subcategory and concluded that none of the candidate options passed the BCT cost test. For more details, see the Supplemental Technical Development Document, Section 12, DCN 14487. Therefore, at this time, the Agency is not promulgating more stringent BCT effluent limitations guidelines for the newly constituted subparts B and E. Rather, the BCT limitations promulgated for former subparts G, H, I, and P (now Bleached Papergrade Kraft and Soda subcategory, subpart B) and former subparts J and U (now Papergrade Sulfite subcategory, subpart E) remain in effect. These limitations are recodified at subparts B and E in the form of segments corresponding to the old subcategorization scheme. See 40 CFR 430.23 and 430.53.

3. Pollutant Parameters for BAT/NSPS/PSES/PSNS

a. Dioxin, Furan, and Chlorinated Phenolic Pollutants. EPA is promulgating effluent limitations guidelines and standards for 2,3,7,8-TCDD ("dioxin"), 2,3,7,8-TCDF ("furan"), and 12 specific chlorinated phenolic pollutants for subparts B and E (except for those mills regulated by TCF limitations). For a discussion of EPA's rationale for regulating these parameters, see the proposal, 58 FR at 66102–03 and the proposal Technical Development Document (EPA 821–R–93–019). For a discussion of EPA's pass-through analysis regarding these pollutants, see Section VI.B.5.c(2) and VI.B.6.d.

b. Volatile Compounds. EPA is promulgating effluent limitations guidelines and standards for chloroform for subpart B. For a discussion of EPA's rationale for regulating chloroform, see the proposal, 58 FR at 66102 and the proposal Technical Development Document (EPA 821–R93–019). EPA is not promulgating effluent limitations guidelines and standards for chloroform for subpart E at this time. For a discussion of EPA's pass-through analysis regarding chloroform, see Section VI.B.5.c(2). For the reasons set forth below and in the Supplemental Technical Development Document, DCN 14487, EPA is not promulgating effluent limitations guidelines and standards for the discharge of acetone, methylene chloride, and methyl ethyl ketone (MEK). EPA received no adverse comments in response to its preliminary determination, presented in the July 1996 Notice of Availability, 61 FR at 36839, not to regulate these pollutants.

EPA has reviewed data from both hardwood and softwood mills employing a variety of bleaching processes in an effort to identify factors that contribute to the formation of acetone, methylene chloride, and MEK in the bleach plant. The bleaching processes evaluated included bleaching using elemental chlorine, BAT Option A (elemental chlorine-free (ECF) bleaching using 100 percent chlorine dioxide), BAT Option B (oxygen delignification plus ECF bleaching using 100 percent chlorine dioxide), ECF bleaching using ozone, and totally chlorine-free bleaching. The ranges of loadings for each pollutant were similar across the different bleaching technologies and for both hardwood and softwood mills. The average loadings for these pollutants do not exhibit a performance trend with regard to the bleaching technologies.

In the EPA/Industry long-term study, methylene chloride was found to be a sample- and laboratory-contaminant in certain cases. Among the more recent data reviewed by EPA, methylene chloride was detected in the bleach plant effluent at ten percent of the sampled mills. Where detected, methylene chloride was present at low concentrations. Therefore, because methylene chloride is infrequently detected, because its formation processes are not fully understood, and because the cases in which it is detected are often attributed to sample and laboratory contamination, EPA has decided not to promulgate effluent limitations guidelines and standards for methylene chloride in this rulemaking.

EPA had proposed limitations for acetone and MEK based on limited data indicating that these parameters may be affected by the technology options being considered. EPA has decided not to promulgate effluent limitations guidelines or standards for these parameters because additional data have shown that this is not the case. Moreover, EPA believes that the limitations and new source performance standards being promulgated today for adsorbable organic halides for subpart B mills will ensure that mills will continue to operate their biological wastewater systems at levels necessary to achieve very high removals of these pollutants, thus obviating the need for separate limitations.

In view of the efficacy of biological wastewater treatment in removing acetone and MEK and the fact that process changes have no effect on the levels at which they are generated, EPA is not convinced that these pollutants pass through POTWs. Therefore, EPA is also not setting pretreatment standards for acetone or MEK for subpart B at this time.

With respect to papergrade sulfite mills, EPA expects that, once promulgated, the limitations and standards for AOX based on, among other things, efficient biological

treatment, will ensure that treatment systems are operated at levels necessary to obviate the need for separate limitations for acetone and MEK. Therefore, EPA is deferring its decision on whether to regulate acetone and MEK until that time.

c. Adsorbable Organic Halides (AOX). EPA is establishing BAT limitations, NSPS, and pretreatment standards for the control of adsorbable organic halide (AOX) discharges from mills in the Bleached Papergrade Kraft and Soda subcategory. EPA is also establishing BAT limitations, NSPS, and pretreatment standards to control AOX discharges from mills in the calcium-, magnesium-, or sodium-based segment of the Papergrade Sulfite subcategory. For a discussion of EPA's pass through analysis for AOX discharges from these mills, see Sections VI.B.5.c(2), VI.B.6.d, and the Supplemental Technical Development Document, Section 8, DCN 14487. As discussed in more detail in those sections, EPA is not setting effluent limitations guidelines and standards for AOX for other mills in subpart E at this time.

AOX is a measure of the total chlorinated organic matter in wastewaters. At pulp and paper mills, almost all of the AOX results from bleaching processes. Even though dioxin and furan are no longer measurable using today's analytical methods at the end of the pipe at many mills, the potential for formation of these pollutants continues to exist at pulp and paper mills as long as any chlorine-containing compounds (including chlorine dioxide) are used in the bleaching process. The record demonstrates a correlation between the presence of AOX and the amount of chlorinated bleaching chemical used in relation to the residual lignin in the pulp (expressed as the kappa factor). The record further shows that there is a correlation between the kappa factor and the formation of dioxin and furan. Therefore, EPA concluded that reducing AOX loadings will have the effect of reducing the mass of dioxin, furan, and other chlorinated organic pollutants discharged by this industry. For further discussion of EPA's rationale for regulating AOX, see the Supplemental Technical Development Document (DCN 14487) and response to comments on justification for establishing limitations for AOX (DCN 14497, Vol. I).

EPA's decision to regulate AOX is also based on the fact that AOX, unlike most of the chlorinated organic compounds regulated today, is comparatively inexpensive to monitor for and is easily quantified by applicable analytical methods. Thus, while EPA could have decided to control the formation of dioxin, furan, chloroform, and the 12 regulated chlorinated phenolic pollutants by requiring mills to monitor for those pollutants on a daily basis, EPA also recognizes that testing for those pollutants is expensive and time consuming. In contrast, daily monitoring for AOX as required in today's rule is considerably less expensive. See Section VI.B.8.b(4) and DCN 14487. Additionally, under the Voluntary Advanced Technology Incentives Program, enrolled mills are eligible for reduced AOX monitoring. See Section IX.B.2 and DCN 14488. Moreover, the presence of AOX can be readily measured in mill effluent, in contrast to the presence of many of the chlorinated organic compounds regulated in today's rule, which for the most part are likely to be present at levels that cannot be reliably measured by today's analytical methods. See Section VI.B.5.a(4). Thus, although EPA is not required under the Clean Water Act to consider the environmental or human health effects of its technology-based regulations, EPA has also determined that regulating AOX as part of BAT, NSPS, PSES and PSNS provides further assurance that human health and the environment will be protected against the potential harm associated with dioxin, furan, and the other chlorinated organic pollutants.

d. Chemical Oxygen Demand (COD). The proposed rule included end-of-pipe BAT limitations and PSES for COD. EPA continues to believe that COD limitations can be used to ensure the operation of processes that minimize the discharge of all organic compounds, including toxic organic compounds that are not readily biodegraded. However, the limited data available at this time do not adequately characterize other sources of COD that may be present at some complex mills, although it appears that the COD contributed by these sources may be as great as the COD contribution from the pulp mill and bleach plant areas of the mill. These other sources of COD could include paper machines, mechanical pulping, other on-site chemical pulping, and secondary fiber processing (including deinking). See DCN 13958 and DCN 14495. Even if sufficient data were now available to establish COD limitations and standards for pulp mill operations in subparts B and E, EPA does not have sufficient information at present to evaluate the other sources of COD and the performance of control technologies to limit COD at those sources in order to set national effluent limitations guidelines and standards.

For this reason, EPA is not establishing final effluent limitations guidelines and standards for COD at this time. EPA does, however, intend to promulgate COD limitations and NSPS for the Bleached Papergrade Kraft and Soda and Papergrade Sulfite subcategories in a later rulemaking. For this purpose, EPA will gather additional data to characterize other sources of COD that may be present at complex mills subject to subparts B or E. This effort will be undertaken concurrently with data gathering to assess the need for establishing COD limits for mills operating in other subcategories (Phase II rulemaking). EPA believes that this data-gathering effort will facilitate setting limits in permits for complex mills with other onsite process operations. EPA will also decide as part of the Phase II rulemaking whether COD passes through or interferes with the operation of POTWs and, therefore, whether pretreatment standards for COD would be appropriate for subparts B and E.

While EPA does not have sufficient data to issue national technology-based regulations for COD at this time, EPA strongly urges permitting authorities to consider including COD limitations in NPDES permits for Subpart B and E mills on the basis of best professional judgment. See 40 CFR 125.3(c)(3). Pretreatment authorities should establish COD local limits if COD passes through or interferes with the POTWs within the meaning of the general pretreatment regulations. See 40 CFR 403.5(c). EPA believes that permitting or pretreatment authorities should address COD for the following reasons. Chronic sublethal toxic effects have been found to result from the discharge of treated effluent from bleached and unbleached kraft, mechanical, and groundwood/sulfite pulp mills (see DCNs 3984, 13985, 13975, 13976, 13979, and 00012). These chronic toxic effects were measured as increased liver mixed-function oxydase activity and symptoms of altered reproductive capacity in fish (DCN 60002). This toxicity is associated at least in part with families of non-chlorinated organic materials that are measured by the existing COD analytical method. Some of these materials, including several wood extractive constituents found in pulping liquors, are refractory (i.e., resistant to rapid biological degradation) and thus are not measurable by the five-day biochemical oxygen demand (BOD_5) analytical method.

In order to assist permitting or pretreatment authorities in developing

COD limitations, EPA describes below various processes that mills can use to control COD. The major sources of COD (which includes slowly biodegradable and non-biodegradable organic material) at a pulp mill are the pulp mill and bleach plant areas. Pulping sources of COD include digester condensates and spent pulping liquor. Open screening processes can be a major source of COD discharges. Spent pulping liquor can also be lost from the process through process spills and equipment leaks. Bleach plant filtrates, the recovery area, leaks from turpentine processing areas at softwood mills, and pulp dryers are examples of other sources of COD at pulp mills.

The process changes that form the basis of the effluent limitations guidelines and standards promulgated today include processes that can reduce discharges of primarily non-chlorinated organic compounds. These as yet unidentified refractory organic compounds have been correlated with chronic sublethal aquatic toxicity from pulp mill effluents. By recovering much of the non-chlorinated organic compounds prior to bleaching, discharges of chlorinated organic compounds also are reduced. For example, improved brownstock washing, which is part of the model technology basis for today's regulations, can be operated (for the purposes of achieving COD limitations) to minimize black liquor carryover to the bleach plant and thus reduce the formation of AOX and toxic chlorinated compounds. Another process technology effective at reducing organic discharges associated with pulping liquors is for a mill to return all water from pulp screening to the process, termed a closed screen room.

EPA intends for the best management practices promulgated today for Subparts B and E to lead mills to retain spent pulping liquors in the process, to the maximum extent practicable, through preventing leaks and spills and through capturing those leaks and spills that do occur and returning the organic material to the recovery system. The BMPs are also intended to lead mills to collect intentional diversions of spent pulping liquors and return those materials to the process. However, the BMP regulations do not require that the contained leaked and spilled material be recovered in the process, nor are intentional diversions required to be returned to the process. In the absence of COD limitations, significant quantities of this organic material could be metered to the wastewater treatment system. As a result, while the BMP program will effectively prevent releases of pulping liquors (and soap and turpentine) that would upset or otherwise interfere with the operation of the wastewater treatment system, refractory organic material believed to cause chronic toxic effects could still be discharged at levels greater than the levels achievable through optimized process technologies and effective end--of-pipe treatment. For this additional reason, EPA believes that COD limitations established on a best professional judgment basis would be appropriate.

The COD data considered by EPA are presented in the support document, Analysis of Data for COD Limitations, DCN 13958, for this rule. This support document also presents EPA's estimates (based on data available today) of the ranges of COD effluent load believed to be contributed by other mill operations, which EPA is supplying as limited guidance to permitting and pretreatment authorities. EPA urges permitting authorities to include—and exercise—reopener clauses in NPDES permits for mills subject to Subpart B or E in order to impose or revise COD effluent limitations once effluent limitations guidelines for COD are promulgated.

e. Color and Other Pollutants. EPA proposed BAT limitations and PSES for color for the Bleached Papergrade Kraft and Soda subcategory only. Commenters asserted that EPA should not establish effluent limitations guidelines and standards for color because it is a concern more appropriately addressed in individual permits based on applicable water quality standards. EPA agrees with this comment. The potential for significant aesthetic or aquatic impacts from color discharges is driven by highly site-specific conditions and is best dealt with on a case-by-case basis through individual NPDES permits or, when appropriate, through local limits. Therefore, the Agency is not promulgating technology-based limitations or standards for color. See DCN 14497, Vol. I.

EPA did not propose effluent limitations for four pollutants, including biphenyl, carbon disulfide, dimethyl sulfone, and mercury, and indicated in the Technical Development Document (at Section 7.3.5) that these four pollutants were remaining under consideration for regulation. Based on limited data available to date, EPA has decided not to establish effluent limitations and standards for these pollutants. EPA has reached this decision because these pollutants are not found consistently in effluents and thus they are not directly related to pulping and bleaching processes serving as the basis for BAT and NSPS. EPA notes that where mercury was found to be present, the concentrations at which it was found suggests that a possible source of this pollutant may be contaminants of purchased chemicals. However, the Agency did not obtain any information or data which would either clearly identify the source or sources of mercury or the other pollutants, or provide a basis for identifying applicable control technologies or establishing effluent limitations. Therefore, EPA is not developing effluent limitations and standards. Individual mills may still receive water quality based effluent limitations (Section 301(b)(1)(C)) for any of these pollutants where necessary to protect local water quality.

f. Biocides. EPA is retaining the current effluent limitations guidelines and standards for the biocides pentachlorophenol and trichlorophenol for former subparts G, H, I, and P (now Bleached Papergrade Kraft and Soda subcategory, subpart B) and former subparts J and U (now Papergrade Sulfite subcategory, subpart E). These limitations and standards are recodified at subparts B and E. See 40 CFR 430.24(d), 430.25(d), 430.26(b), 430.27(b), 430.54(b), 430.55(c), 430.56(b), 430.57(b). For subpart B, the limitations and standards are presented in the form of segments corresponding to the old subcategorization scheme. (EPA did not need to track the old subcategorization scheme for subpart E because the limitations and standards for former subparts J and U were the same.) EPA is not codifying any minimum monitoring frequency for these pollutants. See 40 CFR 430.02. In addition, unless the permitting or pretreatment authority decides otherwise, EPA expects that mills would demonstrate compliance with these limitations at the end of the pipe.

As before, the regulations continue to provide that a discharger is not required to meet the biocides limitations or standards if it certifies to the permitting or pretreatment authority that it is not using these compounds as biocides. See, e.g., 40 CFR 430.24(d). (These certification provisions have been approved by the Office of Management and Budget under control number 2040–0033. See 40 CFR 9.1.) EPA notes, however, that mills using chlorine-containing compounds in their bleaching processes are required to meet separate limitations or standards for pentachlorophenol, 2,4,5-trichlorophenol, and 2,4,6-trichlorophenol in connection with the new effluent limitations and standards promulgated today for subparts B and E regardless whether these compounds are

also used as biocides. See, e.g., 40 CFR 430.24(a)(1). (Those compounds are included within the list of the 12 chlorinated phenolic pollutants discussed in Section VI.B.3.a.) EPA is requiring dischargers to demonstrate compliance with these limitations and standards by monitoring for those pollutants at the point where the wastewater containing those pollutants leaves the bleach plant. See, e.g., 40 CFR 430.24(e).

EPA believes it is appropriate to codify separate limitations and standards for those pollutants, even though in very rare cases a mill may be required to comply with both sets. First, although for the same pollutants the two sets of limitations arise from different chemical applications in different parts of the mill. As biocides, pentachlorophenol or trichlorophenol could be used virtually anywhere in a mill's industrial process, but were typically used as slimicides in whitewater recirculation systems. In the limitations and standards promulgated today, however, pentachlorophenol, 2,4,5-trichlorophenol and 2,4,6-trichlorophenol are being regulated because they are found in bleach plant wastewater when chlorine-containing compounds are used for bleaching. Second, EPA expects these pollutants to be reduced to quantities below the minimum level of the applicable analytical method as a result of bleach plant process changes, which is not the case when they are used as biocides. Thus the different limitations and standards found in subparts B and E for these pollutants respond to different situations and reflect different model process technologies. Finally, EPA believes that mills in the Bleached Papergrade Kraft and Soda subcategory or the Papergrade Sulfite subcategory generally do not use pentachlorophenol or trichlorophenol as biocides today. See the Supplemental Technical Development Document, DCN 14487. Therefore, EPA expects that each mill will be able to certify that it is not using the compounds as biocides and therefore will not be subject to the biocides-related limitations.

4. Analytical Methods

In this rule, EPA is promulgating Method 1650 for the analysis of AOX and Method 1653 for the analysis of certain chlorinated phenolic compounds.

a. Authority. The analytical methods in this final rule are promulgated under the authority of CWA sections 301, 304(h), 307, 308, and 501(a). Section 301 of the Act prohibits the discharge of any pollutant into navigable waters unless the discharge complies with an NPDES permit issued under section 402 of the Act. Section 301 also specifies levels of pollutant reductions to be achieved by certain dates. Section 304(h) of the Act requires the EPA Administrator to "promulgate guidelines establishing test procedures for the analysis of pollutants that shall include the factors which must be provided in any certification pursuant to section 401 of this Act or permit applications pursuant to section 402 of this Act." These test procedures for the analysis of pollutants also assist in the implementation of Section 301. Section 501(a) of the Act authorizes the Administrator to prescribe such regulations as are necessary to carry out her function under this Act.

The Administrator has also made these test procedures (methods) applicable to monitoring and reporting of NPDES permits (40 CFR part 122, §§ 122.21, 122.41, 122.44, and 123.25), and implementation of the pretreatment standards issued under section 307 of CWA (40 CFR part 403, §§ 403.10 and 403.12). Section 308 provides authority for information gathering.

b. Background and History. In the December 17, 1993 proposal, EPA referenced a compendium entitled "Analytical Methods for the Determination of Pollutants in Pulp and Paper Industry Wastewater." This compendium contained methods that had not been promulgated at 40 CFR part 136, but would be applicable for monitoring compliance with the limitations and standards proposed for part 430 at that time. The compendium included methods for the analysis of CDDs and CDFs (i.e., dioxin and furans), AOX, chlorinated phenolics, and color. These methods were proposed for promulgation at 40 CFR part 430 to support the proposed regulation and were included in the docket for the proposed pulp and paper rule.

EPA received more than 200 individual comments and suggestions concerning the proposed analytical methods. Some of these were comments on the methods not being promulgated today. Many of the comments and suggestions were technically detailed, ranging from suggestions on changing the integration time in Method 1650 (for AOX) to reducing the spike levels for labeled compounds used in Method 1653 (for chlorinated phenolics). Other comments raised questions about EPA's approach to technical issues and policies regarding the handling of analytical data. EPA has included a summary of the detailed comments and specific responses to those comments in the record for today's rule.

On July 15, 1996, EPA published a notice of availability that, among other things, summarized the changes the Agency intended to make to the proposed or promulgated analytical methods and stated that detailed revisions to the methods would be added to the record at a later date. See 61 FR at 36848–49. In promulgating today's rule, EPA has implemented the changes identified in the July 1996 Notice. These changes are summarized below and detailed in the response to comments provided in the record.

c. Analytical Methods Promulgated Today. EPA has revised the analytical methods compendium entitled "Analytical Methods for the Determination of Pollutants in Pulp and Paper Industry Wastewater" to incorporate revisions to the methods made since proposal. This compendium (EPA–821–B–97–001, August 1997) contains the analytical methods to be used for monitoring compliance with the limitations and standards promulgated today for subparts B and E. The compendium includes Method 1650 for the determination of AOX and Method 1653 for the determination of chlorinated phenolics. These two analytical methods are being promulgated today as appendices to 40 CFR part 430. They have not yet been promulgated at 40 CFR part 136.

(1) Method 1650: AOX by Adsorption and Coulometric Titration

Method 1650 can be used to measure AOX in water and wastewater. AOX is a measure of halogenated organic compounds that adsorb onto granular activated carbon (GAC). The method involves adsorption of the organic halides (chlorine, bromine, iodine) in water onto GAC, removal of inorganic halides by washing, combustion of the organic halides (along with the GAC) to form hydrogen halides, and titration of the hydrogen halides with silver ions in a microcoulometer. The results are reported as organic chlorine even though other halides may be present because chlorine is the halide of concern in pulp and paper wastewaters. EPA studies have demonstrated a Method Detection Limit (MDL) of 6.6 ∝g/L. Based on this MDL and on calibration of the microcoulometer, the minimum level (ML) in Method 1650 has been determined to be 20 ∝g/L. The minimum level and other performance attributes for this method have been validated in single laboratory method validation studies and by use in data gathering for today's final rule. All laboratories that used Method 1650 in the data gathering effort calibrated their instruments at the ML.

Since proposal, EPA has made changes to Method 1650 to improve the ease of use and the reliability of this method. These changes are reflected in the version of Method 1650 being promulgated today and they largely reflect comments and suggestions made following proposal of the method. In response to comments, EPA made several changes to Method 1650, including: adjustment of the breakthrough specification to 25 percent based on recent data; allowance of a 100- or 25-mL adsorption volume, provided the sensitivity requirements in the method are met; provision of greater flexibility in allowable glassware sizes; use of 100-mL volumes of standards for calibration and other purposes to conserve reagents; use of only 2-mm columns to make the column procedure more reproducible; adjustment of the QC acceptance criteria based on an industry interlaboratory method validation study; and the addition of a minimum integration time of 10 minutes to assure that all AOX is measured. In addition, the format of the method has been modified to reflect the standardized format recommended by EPA's Environmental Monitoring Management Council (EMMC). For a more detailed discussion of the changes made to Method 1650 since proposal, see DCN 14497, Vol. VII.

EPA disagreed with several comments on EPA's proposed Method 1650 and therefore did not make the changes suggested by commenters. In particular, EPA disagrees that the method detection limit (MDL) should be increased to 20 ∝g/L to allow for blank contamination. In EPA's view, blank contamination can be controlled to levels well below 20 ∝g/L. EPA also disagrees that it should eliminate Section 8.1.2 of the proposed method. (Section 8.1.2 contained provisions for flexibility.) EPA has received a large number of requests that analytical methods be "performance-based," and has attempted to implement the means for allowing changes in Section 8.1.2 (Section 9.1.2 in the version of Method 1650 being promulgated today). Under Section 8.1.2, the laboratory can make minor modifications to Method 1650 provided that the laboratory performs all quality control (QC) tests and meets all QC acceptance criteria. In addition, contrary to a suggestion from a commenter, EPA has not included examples of cell maintenance in Method 1650 because EPA believes that analysts who maintain the coulometric cell must be familiar with the cell maintenance procedures provided by the instrument manufacturer. For more information on these issues, see DCN 14497, Vol. VII.

(2) Method 1653: Chlorophenolics by In-Situ Derivatization and Isotope Dilution GC/MS

Method 1653 can be used to measure chlorinated phenolic compounds in water and wastewater amenable to *in situ* acetylation, extraction, and determination by HRGC combined with low-resolution mass spectrometry (LRMS). In this method, chlorophenolics are derivatized *in situ* to form acetic acid phenolates that are extracted with hexane, concentrated, and injected into the HRGC/LRMS where separation and detection occurs.

EPA studies have demonstrated MDLs of 0.09–1.39 ∝g/L for chlorophenolics in water. Based on these MDLs and on calibration of the GCMS instrument, minimum levels have been determined for the 12 chlorinated phenolics in today's rule. These minimum levels of 2.5 or 5.0 ∝g/L depend on the specific compound and have been validated in single laboratory validation studies and by use in data gathering for today's final rule. All laboratories that used Method 1653 in the data gathering effort calibrated their instruments at the ML.

Since proposal, EPA has made changes to Method 1653 to improve the reliability of the method and to lower costs of measurements. These changes are incorporated into the version of the method being promulgated today; they largely reflect comments and suggestions made following proposal of the method.

In response to comments, EPA made several specific changes to Method 1653, the most significant of which are as follows: lowering the spike level of the labeled compounds to reduce interferences with trace levels of the analytes of interest and to lower the cost of labeled compounds; specifying more appropriate solvents for the analytical standards containing labeled and native analytes; requiring laboratories to add the labeled compounds to the sample prior to pH adjustment; restating the quality control acceptance criteria for recovery in terms of percent instead of concentration; and reducing method flexibility in certain critical areas. In addition, as with Method 1650, the method has been revised into the standardized EMMC format.

EPA disagreed with several comments on EPA's proposed Method 1653 and therefore did not make changes suggested by commenters. EPA received comments that Method 1653 has not been validated adequately. EPA disagrees. Method 1653 has been validated in multiple single-laboratory method validation studies and extensively validated in field studies for this final rule. EPA believes that these extensive studies are more than adequate to validate Method 1653 for use in data gathering to support this final rule and for use in monitoring under this final rule. EPA also disagrees with comments that Method 1653 is inadequate for chlorocatechols. EPA believes that Method 1653 provides more reliable data for catechols and the other chlorophenolics than any other method available, and the commenter provided no suggestions for how Method 1653 could be improved for determination of chlorocatechols. EPA has, therefore, kept chlorocatechols in Method 1653. EPA also disagrees with comments that initial precision and recovery (IPR) and ongoing precision and recovery (OPR) tests should be replaced with initial calibration (ICAL) and calibration verification (VER) tests. (The ICAL and IPR are different in both form and function. The calibration test is for calibrating the analytical system while the IPR test is conducted to check performance. The OPR and VER tests are the same; only the terminology is different. EPA has retained use of the OPR terminology to be consistent with other methods.) EPA also disagrees with comments that use of labeled compounds is not worth the benefit and that all phenols and guaiacols should be quantitated against 3,4,5-trichlorophenol. EPA believes that data gathered to support today's final rule and in other studies demonstrate that isotope dilution provides the most precise and accurate measurement of chlorophenolics and other compounds determined by gas chromatography/mass spectrometry. EPA also received comments urging EPA not to allow modifications to the method. However, EPA also received a large number of requests that analytical methods be "performance-based," and has attempted to implement the means for allowing changes to improve detection and quantitation or to lower costs of measurements. Limited changes may be made, except where specifically prohibited in Method 1653, provided that the performance tests are repeated and the results produced by the change are equivalent or superior to results produced with the unmodified method. EPA has also decided to retain the mention of field duplicates in the method in the event that a laboratory or discharger desires to measure sampling precision. Finally, EPA has not added the requirement that laboratories should be forced to overcome emulsions. EPA believes that nearly all emulsions can be overcome and provides specific steps in

the method that the laboratory must take to break the emulsion. However, EPA does not wish to impose such a requirement on laboratories in the event that a future sample is encountered that produces an emulsion that cannot be broken. If all efforts to break the emulsion fail, Method 1653 allows the use of a dilute aliquot. For more discussion, see Comment Response Document, Vol. VII, DCN 14497.

d. Other Methods. In addition to the methods promulgated today, the effluent limitations guidelines and standards also call for the use of Method 1613 (for 2,3,7,8-tetrachlorodibenzo-p-dioxin (TCDD) and 2,3,7,8-tetrachlorodibenzofuran (TCDF)) and any of the approved methods for chloroform to monitor compliance. These methods are discussed below.

(1) Method 1613: CDDs and CDFs by HRGC/HRMS

Method 1613 uses isotope dilution and high-resolution gas chromatography combined with high-resolution mass spectrometry (HRGC/HRMS) for separation and detection of 17 tetra- through octa-substituted dibenzo-p-dioxin and dibenzofuran isomers and congeners that are chlorinated at the 2, 3, 7, and 8 positions. Separate procedures are available for the determination of these analytes in water and solid matrices. In the procedure, a 1–L sample is passed through a 0.45-∝ glass fiber filter. The filter is extracted with toluene in a Soxhlet/Dean-Stark (SDS) extractor. The aqueous filtrate is extracted with methylene chloride in a separatory funnel. Extracts from the SDS and separatory funnel extractions are combined and concentrated. To remove interferences, the combined, concentrated extract is cleaned up using various combinations of acid and base washes, acidic and basic silica gel, gel permeation chromatography (GPC), high-performance liquid chromatography (HPLC), and activated carbon. The cleaned up extract is concentrated to 20 ∝L and a 1–2 ∝L aliquot is injected into the HRGC/HRMS.

The MDL determined for TCDD is 4.4 part-per-quadrillion (ppq). Minimum levels for Method 1613 are 10 ppq for TCDD and TCDF. These MLs have been validated through an interlaboratory study and by use in the analysis of mill effluents.

EPA recently promulgated Method 1613 for the determination of CDDs and CDFs at 40 CFR 136, Appendix A in a final rule published on September 15, 1997 (62 FR 48394). Of the 17 congeners that may be measured with this method, only TCDD and TCDF are regulated under this final rule. Method 1613 was first proposed for general use in compliance monitoring and for other purposes at 40 CFR part 136 on February 7, 1991 (56 FR 5090) and was proposed for use in pulp and paper industry wastewaters at 40 CFR part 430 on December 17, 1993 (58 FR 66078). EPA received extensive comments and suggestions on both proposals of Method 1613; in several cases, the same set of comments was submitted. EPA updated the final Method 1613 based on suggestions and comments received on the original proposal (56 FR 5090) and on the proposal of Method 1613 for use at 40 CFR part 430 (58 FR 66078). In the docket supporting promulgation of Method 1613, EPA provided a listing of detailed comments received on both proposals of Method 1613, along with detailed responses to all of those comments. Because Method 1613 was promulgated in a final rule prior to promulgation of today's final rule, and because EPA received comments and provided responses in support of that final rule, EPA is not promulgating Method 1613 as part of today's final rule. See the final rule promulgating Method 1613 (62 FR 48394) for all information concerning that method.

(2) Method 1624: Volatiles by Purge-and-Trap and Isotope Dilution GC/MS

Method 1624 is used for the determination of volatile pollutants in water and wastewater. It employs a gas chromatograph coupled to a mass spectrometer (GC/MS) to separate and quantify volatile pollutants. Detected pollutants are quantified by isotope dilution. Samples of water or solids suspended in water are purged of volatile organic pollutants by a stream of inert gas into the gaseous phase where they are concentrated onto a trap. Subsequent heating of the trap introduces the concentrated volatile organics into a GC/MS for separation and quantification.

With no interferences present, minimum levels of 10–50 ∝g/L can be achieved, depending on the specific pollutant. For chloroform, the minimum level is 10 ∝g/L. This minimum level has been validated by use.

When EPA initially proposed today's rule, it proposed to regulate four volatile organic pollutants. Method 1624, Revision C was proposed for monitoring the presence of these pollutants in effluent discharges. Revision C contained updates and improvements to Method 1624, Revision B, which was promulgated October 26, 1984 (49 FR 43234).

In today's final rule, EPA is regulating only one of the originally proposed volatile pollutants (chloroform); this pollutant can be measured by already-approved EPA Methods 601, 624, and 1624B and Standard Methods 6210B and 6230B. Therefore, EPA has not included Method 1624C in today's final rule and has not formally addressed comments concerning Method 1624C. EPA will consider comments on Method 1624C when this version of the method is promulgated for general use at 40 CFR 136 or when the method is further revised.

(3) Other Issues Concerning Analytical Methods Promulgated in Today's Final Rule

The overall comments received from the regulated industry and others provide suggestions for method improvement but, in some cases, question EPA's approach to technical issues in the methods and the handling of data. For example, commenters suggested that quality control tests be performed at the minimum level (ML), that a 3-point calibration should be used for labeled compounds in isotope dilution methods, and that additional QC tests should be required. Commenters also stated that all methods must be subjected to interlaboratory validation, and that the compliance monitoring detection limit (CMDL) and compliance monitoring quantitation limit (CMQL) should be used in place of EPA's method detection limit (MDL) and ML, respectively. EPA responded to these suggestions by providing specific reasons why they are inconsistent with the provisions in other methods, are more extensive than required to assure reliable results, or that they would not substantively alter the conclusions of studies and data gathering used to support this final rule. The detailed responses to these issues are in the record for this rule.

5. Bleached Papergrade Kraft and Soda Subcategory

a. BAT. (1) Technology Options Considered.

(a) Options Proposed. The Agency considered many combinations of pollution prevention technologies as regulatory options to reduce the discharge of toxic and nonconventional pollutants from bleached papergrade kraft and soda mills. These options are discussed in the proposal and the Notice of Availability published on July 15, 1996. See 58 FR at 66109–11 and 61 FR at 36838–39, 36848. Five different options were presented in the proposal.

The Agency proposed BAT effluent limitations guidelines based on an option that included the use of oxygen delignification or extended cooking

with elimination of hypochlorite and complete (100 percent) substitution of chlorine dioxide for elemental chlorine as the key process technologies. Complete substitution of chlorine dioxide for elemental chlorine and elimination of hypochlorite is known as elemental chlorine-free (ECF) bleaching. EPA's definition of ECF bleaching includes high shear mixing to ensure adequate mixing of pulp and bleaching chemicals, as well as other technology elements.

EPA proposed this option because it believed, based on the record at the time, that this combination of technologies was both available and economically achievable and that no other available and economically achievable option resulted in greater effluent reductions. See 58 FR at 66110. In the July 1996 Notice, EPA identified this technology option as Option B. See 61 FR at 36838.

EPA also considered at proposal another option based on conventional pulping—complete substitution of chlorine dioxide for elemental chlorine, but without the use of oxygen delignification or extended cooking (i.e., conventional pulping). See 58 FR at 66111. At the time of proposal, EPA was unable to fully analyze this alternative because very limited performance data were available from mills using this technology. Therefore, EPA solicited further data and comments on this option, Id. In the July 1996 Notice, EPA published preliminary findings regarding this option, which it identified as Option A. See 61 FR at 36838–42.

The Agency also considered a totally chlorine-free (TCF) option for the Bleached Papergrade Kraft and Soda subcategory at proposal. See 58 FR at 66109. TCF bleaching processes are pulp bleaching operations that are performed without the use of chlorine, sodium hypochlorite, calcium hypochlorite, chlorine dioxide, chlorine monoxide, or any other chlorine-containing compound. EPA concluded that TCF was not an available pollution prevention technology at the time of proposal because of limited worldwide experience with this process and a lack of data for TCF bleaching of softwood to full market brightness. To encourage continuing innovation in the development of processes to reduce or eliminate the discharge of pollutants from the Bleached Papergrade Kraft and Soda subcategory, however, EPA proposed alternative BAT limits for mills adopting TCF processes.

In the July 1996 Notice, EPA also described an incentives program that it was considering for Subpart B mills in order to promote more widespread use of advanced pollution prevention technologies. See 61 FR at 36849–58. As part of this voluntary program, EPA proposed to establish up to three sets of alternative BAT limitations that would complement the compulsory baseline BAT requirements. EPA identified the proposed alternative BAT limitations as Tier I, Tier II, and Tier III BAT limitations. See 61 FR at 36850. EPA considered basing Tier I limits on BAT Option B technology (if Option A were chosen as the basis for the baseline BAT limitations). The Tier II and Tier III limitations, in turn, would be based on technologies and processes that EPA expected to achieve substantial reductions in pulping area condensate, evaporator condensate, and bleach plant wastewater flow.

(b) Final ECF Options Evaluated. For this final rule, EPA considered two ECF technology options—Option A and Option B—as the basis for BAT effluent limitations. Option A consists of conventional pulping followed by complete substitution of chlorine dioxide for elemental chlorine, as well as the following nine elements:

(i) Adequate chip thickness control;

(ii) Closed brownstock pulp screen room operation, such that screening filtrates are returned to the recovery cycle;

(iii) Use of dioxin- and furan-precursor-free defoamers (i.e., water-based defoamers or defoamers made with precursor-free oils);

(iv) Effective brownstock washing, i.e., washing that achieves a soda loss of less than or equal to 10 kg Na_2SO_4 per ADMT of pulp (equivalent to approximately 99 percent recovery of pulping chemicals from the pulp);

(v) Elimination of hypochlorite, i.e., replacement of hypochlorite with equivalent bleaching power in the form of additions of peroxide and/or oxygen to the first extraction stage and/or additional chlorine dioxide in final brightening stages;

(vi) Oxygen- and peroxide-enhanced extraction, which allows elimination of hypochlorite and/or use of a lower kappa factor in the first bleaching stage;

(vii) Use of strategies to minimize kappa factor and dioxin- and furan-precursors in brownstock pulp;

(viii) High shear mixing during bleaching to ensure adequate mixing of pulp and bleaching chemicals; and

(ix) Efficient biological wastewater treatment, achieving removal of approximately 90 percent or more of influent BOD_5. These elements are discussed in detail in the Supplemental Technical Development Document, DCN 14487. Option B is identical to Option A, with the addition of extended delignification (oxygen delignification and/or extended cooking). EPA also considered a TCF option, see subsection (c) immediately below, and, in the context of the Voluntary Advanced Technology Incentives Program, three sets of voluntary alternative BAT limitations. See Section IX.A.

In a slight change from the definition of the proposed BAT option, EPA has defined Option B not only in terms of the presence of extended delignification technology (i.e., oxygen delignification or extended cooking) but also by the pre-bleaching kappa number achieved by extended delignification. Kappa number is the measure of lignin content in unbleached pulp and is commonly used by the industry. Many researchers have shown (and EPA has confirmed) strong correlations between the kappa number of the pulp entering the first stage of bleaching and the bleach plant effluent loads of AOX and COD. See DCN 14497, Vol. I. EPA concluded that merely employing extended delignification technologies, without reducing the unbleached pulp kappa number, is not sufficient to achieve the low effluent loadings of AOX and COD characteristic of Option B. Therefore, EPA has redefined Option B as ECF with extended delignification resulting in a kappa number at or below 20 for softwoods and below 13 for hardwoods (see the Supplemental Technical Development Document, DCN 14487). EPA found that these kappa numbers are achievable by virtually all mills that currently have installed and are effectively operating extended delignification technology.

As part of the nine elements common to both Option A and Option B, EPA has included strategies for minimizing kappa factor and dioxin- and furan-precursors in brownstock pulp. These strategies are part of Options A and B because EPA has determined that they minimize the generation of dioxin, furan, and AOX and, hence, are part of the model process sequence to achieve those limitations. See 61 FR at 36848 and the Supplemental Technical Development Document, DCN 14487.

Kappa factor, also known as active chlorine multiple, is the ratio of chlorine bleaching power to the pulp kappa number. (The kappa factor is different from the kappa number discussed above.) The kappa factor used on a particular bleach line depends on the fiber furnish, final product specifications, pre-bleaching processes employed, and optimization of bleaching costs. At the mills whose data were used to characterize Option A performance, kappa factors for softwood

furnish averaged 0.17 and all were less than 0.2. At the mills whose data were used to characterize Option B performance, kappa factors for softwood furnish averaged 0.23, with all but one at less than 0.21. Well-operated and maintained mills using comparable kappa factors will be capable of achieving limitations corresponding to Option A or B, respectively. Based on certain site-specific factors, such as furnish, some mills will be capable of achieving today's limitations with higher kappa factors. There are numerous strategies a mill can employ to minimize its kappa factor. See the Supplemental Technical Development Document, DCN 14487.

In addition, there are numerous strategies a mill can employ to minimize precursors of dioxin and furan contained in brownstock pulp. These strategies include, but are not limited to, improved brownstock washing, improved screening to produce cleaner pulp, eliminating compression wood (knots) from brownstock pulp, and using only precursor-free condensates in brownstock washers. The strategy or strategies appropriate for the production of a given pulp depend on the raw material (wood species and the form it takes, i.e., chips, waste wood, or sawdust), process equipment, and the specifications of the final pulp product (brightness, cleanliness, strength, absorbency, and others). For a discussion of these strategies, see the Supplemental Technical Development Document, DCN 14487.

(c) Totally Chlorine-Free (TCF) Bleaching Option Evaluated. The Agency received many comments that it should continue to investigate TCF bleaching because dioxin and furan are not generated at any level with TCF bleaching, thus assuring that these pollutants are not released to the environment. The Agency conducted two sampling programs at the one U.S. mill that produces TCF bleached kraft softwood pulp. EPA collected samples of bleach plant filtrates but could not collect samples of treated effluent because the mill does not employ secondary treatment. The Agency also conducted a sampling program at a Nordic mill that produces hardwood and softwood kraft pulp on two bleach lines that alternate between ECF and TCF bleaching. Samples collected at this mill could not be used to characterize treated TCF bleaching effluents because they are combined with ECF bleaching effluents for treatment.

Both of the sampled TCF softwood fiber lines employed oxygen delignification followed by multiple stages of peroxide bleaching. The Nordic mill also uses extended cooking, and was able to reduce the lignin content of unbleached pulp to a very low kappa number of four. At the time of sampling, this mill bleached pulp to a brightness of 83 ISO. The U.S. mill's unbleached pulp kappa number was between seven and ten. Bleached pulp brightness was approximately 79 during the first sampling episode at the U.S. mill, but by the time of the second sampling episode, the mill had improved its process to achieve a pulp brightness of 83 ISO.

At both mills, chloroform or chlorinated phenolic pollutants were not detected in samples collected by EPA. At the U.S. mill, dioxin, furan, and AOX were not detected above the analytical minimum level during sampling fully representative of TCF operations. The average bleach plant AOX loading measured by EPA at the Nordic mill was 0.002 kg/ADMT (compared to a long-term average of 0.51 kg/ADMT for Option A). EPA's dioxin sampling results for the Nordic mill were surprising. Dioxin was detected at a concentration just above the minimum level in one sample of combined bleach plant filtrate, when the mill was bleaching without the use of chlorine or any chlorinated compounds. Furan was not detected. EPA believes the dioxin results were unique to the operation of this mill and does not conclude that TCF bleaching generates dioxin.

Neither of the two sampled mills produced softwood pulp at full market brightness. In the last three years, however, several non-U.S. mills have reported the production of TCF softwood kraft pulp at full market brightness. EPA's data are insufficient to confirm that TCF processes are technically available for the full range of market products currently served by ECF processes. See DCN 14497, Vol. I. Further, EPA's data are insufficient to define a segment of the Bleached Papergrade Kraft and Soda subcategory where TCF processing is known to be technically feasible and thus could be the basis of compulsory BAT limitations. Despite these impediments, EPA believes that the progress being made in TCF process development is substantial, and that additional data may demonstrate that TCF processes are indeed available for the full range of market products. For this reason, EPA also evaluated the performance of TCF mills in order to establish alternative limitations for mills that voluntarily choose to employ TCF processes. See Section VI.B.5.a(4).

(2) Costs of Technology Options Considered. The Agency estimated the cost for the Bleached Papergrade Kraft and Soda subcategory to achieve each of the technology options considered today. These estimated costs are summarized in this section and are discussed in more detail in several technical support documents. (See the BAT Cost Model Support Document, DCN 13953; Memorandum: Costing Revisions Made Since Publication of July 15, 1996 Notice of Data Availability, DCN 14493; Supplemental Technical Development Document, DCN 14487; Analysis of Impacts of BAT Options on the Kraft Recovery Cycle, DCN 14490; Effect of Oxygen Delignification on Yield of the Bleached Papergrade Kraft Pulp Manufacturing Process, DCN 14491; and the Technical Support Document for Best Management Practices for Spent Pulping Liquors Management, Spill Prevention, and Control, DCN 14489.) (For a discussion of the costs associated with the Voluntary Advanced Technology Incentives Program BAT technologies, see the Technical Support Document, DCN 14488.) All cost estimates in this section are expressed in 1995 dollars. The cost components reported in this section are engineering estimates of the cost of purchasing and installing equipment and the annual operating and maintenance costs associated with that equipment. See Section VIII of this preamble for a discussion of the costs used in the economic impact analysis.

Because EPA considers efficient biological wastewater treatment to be current industry practice, EPA has not included its costs in the estimates of costs of BAT. See the Supplemental Technical Development Document, DCN 14487. As discussed in Section VI.B.5.c. below, for PSES for the Bleached Papergrade Kraft and Soda subcategory, EPA evaluated the same process change technology options that it evaluated for BAT, with the exception of biological wastewater treatment. As a result, EPA used the same cost model to estimate the costs of PSES and BAT. Set forth below are the total costs for all mills in the subcategory (direct and indirect dischargers) to complete the process changes that are the technology bases for the options considered for BAT and PSES. The costs of complying with today's BMP requirements are also included.

(i) Additional Data Gathering and Analysis Since Proposal. EPA updated its database of mill process information by reviewing comments on the proposed rule and the July 15, 1996 Notice, by examining information from publicly available sources as well as information gathered by AF&PA and NCASI, and by contacting mills directly. The Agency revised the cost estimates it made at

proposal in many ways but retained two major assumptions: (1) Mills would continue to make the same quantities and grades of pulp; and (2) mills already using the technology bases for the BAT technology options generally would incur only monitoring costs to comply with regulations based on those options. See the Supplemental Technical Development Document, DCN 14487.

EPA received comments that it severely underestimated the costs of its proposed option (now identified as Option B). Commenters contended that this underestimate derived in large part from EPA's underestimate of the increase in load of black liquor solids that will be routed to the recovery system after installation of oxygen delignification, closing screen rooms, improving brownstock washing, and recovering additional pulping liquors through a best management practices (BMP) program. In addition to underestimating the increase in load, commenters claimed that EPA also underestimated the costs for recovery boilers to accommodate the increased load. Commenters asserted that most mills are recovery boiler-limited and, to employ the proposed BAT, would have to install new recovery boilers at a very high cost.

In response to these and other comments on the proposed rule, EPA and NCASI undertook several data gathering efforts aimed specifically at obtaining information to improve EPA's cost estimates. In late 1994, NCASI distributed a survey to collect information about recovery furnace capacity and a second survey about the implementation and cost of pulping liquor spill prevention and control programs (i.e., BMPs).

Based on this and other information, EPA concluded that there is no foreseeable set of circumstances where implementation of either Option A or B would force a mill to replace or even rebuild an existing recovery boiler. Therefore, EPA strongly disagrees with comments that it severely underestimated the costs of what is now known as Option B. Based on data reported in the NCASI survey, almost 60 percent of the recovery boilers operated by the industry have sufficient capacity to accommodate the increased loads that would result from implementing either Option A or B, in combination with the BMP program promulgated today. At most of the remaining 40 percent of the recovery boilers, any increased thermal load can be accommodated through improved boiler operation requiring no capital expenditures, by increasing pulp yield by using anthraquinone, or by reducing the caloric value of the black liquor burned in the boiler by using oxygen-black liquor oxidation. EPA estimates that only one boiler operated by a bleached papergrade kraft and soda mill would need to be upgraded regardless which option is selected as the technology basis for today's rule. The cost of the upgrade is small in comparison to the cost of building or replacing a boiler. See the Supplemental Technical Development Document, DCN 14487, and Analysis of Impacts of BAT Options on the Kraft Recovery Cycle, DCN 14490.

For the purposes of estimating the costs of Option B, EPA estimated costs for implementation of oxygen delignification (OD) based on the record as a whole that shows that OD does not have an impact on yield of bleached pulp. Although some stakeholders asserted that EPA's yield estimates were in error, the entire record on yield supports EPA's basis for estimating the cost of BAT Option B. Some commenters asserted that EPA overestimated the costs for Option B presented in the July 1996 Notice by failing to account for the increase in yield that would result from implementation of OD. Industry commenters asserted that OD would result in reduced bleached pulp yields. In response to these comments, EPA reviewed all available literature reports and contacted companies operating mills with OD systems. Although some laboratory and modeling analyses indicate that OD following a modified kraft cooking could increase yields by one to two percent, EPA found no documentation that full-scale OD systems are being operated in this manner. One of the two U.S. companies that operate more mills with OD systems than any other has found no statistical difference in yield measured at the end of the bleach plant with the installation of OD. The other company offered no specific data on yield, but has seen no substantial impact on recovery boilers, indicating that no appreciable change in yield has been experienced. See DCN 14491.

EPA also collected additional information about the costs of process equipment and updated its information about the costs of chemicals, wood, energy, and labor (record sections 21.1.2 to 21.1.6). EPA used this information to revise the cost model spreadsheet. See the Memorandum: Costing Revisions Made Since Publication of July 15, 1996 Notice of Data Availability, DCN 14493, and BAT Cost Model Support Document, DCN 13953. These changes are discussed immediately below.

(ii) Major Changes Since Proposal. Among other changes since proposal, EPA's cost estimates for Option B now include the costs for new or incremental increases in OD systems for mills unable to achieve the kappa numbers used to characterize the Option B technology. In its July 1996 Notice, EPA described this change and additional changes to the cost model. See 61 FR at 36840–41 and BAT Cost Model Support Document, DCN 13953.

In response to comments on the July 1996 Notice, EPA corrected mill-specific information and made additional changes to the cost model. See the Memorandum: Costing Revisions Made Since Publication of July 15, 1996 Notice of Availability, DCN 14493. Among those changes was a correction of errors in the costs of caustic and hydrogen peroxide that resulted from a unit conversion error (this error carried through the proposal and the Notice cost estimates). As a result of the changes, including the correction made to the cost of caustic and hydrogen peroxide, the net engineering operating and maintenance (O&M) costs for Option B for all mills in the Bleached Papergrade Kraft and Soda subcategory increased from the savings of $7 million/year presented in the July 1996 Notice, to the $2 million/year increased costs estimated today. See the Supplemental Technical Development Document, DCN 14487.

For the purpose of estimating the cost of the regulations, EPA excluded the costs of process changes that were either completed or under construction as of mid-1995. EPA incorrectly stated in the July 1996 Notice that costs for process changes committed to but not yet under construction as of mid-1995 were also excluded from the cost of this regulation. These latter costs have been included. See the Supplemental Technical Development Document, DCN 14487.

(iii) Final Cost Estimates of the Options Considered. EPA's final cost estimates for Option A and B for the Bleached Papergrade Kraft and Soda subcategory (BAT, PSES, and BMPs) follow in Table VI–1.

TABLE VI–1.—TOTAL BLEACHED PAPERGRADE KRAFT AND SODA SUBCATEGORY CAPITAL AND ENGINEERING O&M COSTS FOR BAT, PSES AND BMPS

[1995 dollars]

	Final cost estimates	
	Option A	Option B
Capital ($ million)	966	2,130

TABLE VI–1.—TOTAL BLEACHED PAPERGRADE KRAFT AND SODA SUBCATEGORY CAPITAL AND ENGINEERING O&M COSTS FOR BAT, PSES AND BMPS—Continued

[1995 dollars]

	Final cost estimates	
	Option A	Option B
Engineering O&M ($ million/yr)	113	2.02

For both Option A and Option B, EPA excluded costs for the use of dioxin- and furan-precursor-free defoamers, adequate wood chip size control, and efficient biological wastewater treatment in its estimates of the costs of the final BAT technology options. These processes represent current industry practice. See the Supplemental Technical Development Document, DCN 14487. However, EPA's estimate of the costs of BAT also includes a general allowance for increased technical supervision and process engineering that could be used, in part, to design and implement a chip quality control program or to improve operation of existing biological wastewater treatment. In addition, any mill not currently using dioxin- and furan-precursor-free defoamers can use them without incurring significant costs. See the Supplemental Technical Development Document, DCN 14487. EPA evaluated the costs of retrofitting U.S. bleached papergrade kraft and soda mills to TCF bleaching to provide perspective on the likelihood of TCF processes being found to be economically achievable once they are shown to be technically available. EPA investigated the costs of two TCF bleach sequences. These bleach sequences included all common elements that are part of Option A and Option B (adequate chip thickness control, closed brownstock pulp screen room operation, use of dioxin- and furan-precursor-free defoamers, effective brownstock washing, elimination of hypochlorite, oxygen- and peroxide-enhanced extraction, use of strategies to minimize kappa factor and dioxin- and furan-precursors in brown stock pulp, high-shear mixing during bleaching, and efficient biological wastewater treatment). The bleaching sequences also include medium-consistency oxygen delignification. One TCF bleach sequence was based on peroxide bleaching (OQPP) and the other was based on ozone and peroxide bleaching ($OZE_{op}QPZP$). EPA's final cost estimates for TCF bleach sequences for the total Bleached Papergrade Kraft and Soda subcategory (BAT, PSES, and BMPs) are as follows. See the Supplemental Technical Development Document, DCN 14487.

TABLE VI–2.—TOTAL BLEACHED PAPERGRADE KRAFT AND SODA SUBCATEGORY CAPITAL AND ENGINEERING O&M COSTS OF TCF OPTIONS FOR BAT, PSES, AND BMP

[1995 dollars]

	Estimated costs	
	Peroxide-TCF (OQPP)	Ozone-TCF ($OZE_{op}QPZP$)
Capital ($ million)	3,090	5,630
Engineering O&M ($million/yr)	660	849

(3) Effluent Reductions Associated with Technology Options Considered. The Agency estimated the effluent reductions for the Bleached Papergrade Kraft and Soda subcategory that will result from the BAT options it analyzed. These estimated reductions are summarized in this section and are discussed in more detail in the Supplemental Technical Development Document, DCN 14487.

As discussed in the July 1996 Notice, EPA recalculated the effluent reduction benefits using a new baseline of mid-1995. See 61 FR at 36840. In addition, EPA revised and simplified the methodology used to estimate that baseline (using a model mill approach). Id. EPA also used a second approach to estimate the effluent loads of dioxin and furan using data for individual mills as compiled in the NCASI 1994 Dioxin Profile (see DCN 13764). The baseline calculation methodology revisions, along with details of the effluent reduction calculations, are described in record section 22.6.

As explained in DCN 14487, after July 1996, EPA again recalculated the effluent reductions. The baseline remains mid-1995. As before, EPA used one-half of the minimum level specified in 40 CFR 430.01(i) or one-half of the reported detection limits to estimate effluent discharge loadings when pollutant concentrations were below minimum levels. EPA considers this a reasonable approach for estimating mass loads because the actual concentration of the sample is too small to measure by current analytical methods, but is between zero and the detection limit. Furthermore, ECF processes use and generate chlorinated compounds, so EPA expects that chlorinated compounds were present (i.e., with a concentration value greater than zero) in the samples. Thus, EPA believes that it is appropriate to substitute a value at the midpoint between zero and the detection limit (i.e., the upper bound of the concentration in the sample) for ECF mills. The methodology was modified slightly for mills that use TCF bleaching sequences. Because chlorinated compounds are not used and are not generated by TCF processes, EPA assumed that TCF mills would discharge zero kilograms per year of AOX and the individual chlorinated pollutants rather than an amount equivalent to one-half the minimum level or detection limit multiplied by an appropriate production-normalized flow rate.

EPA's revised baselines, which were again found to be comparable to NCASI's industry-wide estimates for dioxin and furan, were used to calculate effluent reductions summarized in Table VI–3. The table shows the estimated baseline and the reduction from baseline expected if the option were implemented by all the existing direct discharging mills in the subcategory (i.e., those mills to which BAT will apply). The slightly greater removals of the bleach plant pollutants by Option B are a result of the reduced bleach plant flow found at mills employing Option B technology.

TABLE VI–3.—BASELINE DISCHARGES AND ESTIMATED REDUCTIONS OF POLLUTANTS FOR BLEACHED PAPERGRADE KRAFT AND SODA MILLS COMPLYING WITH BAT TECHNOLOGY OPTIONS CONSIDERED [a]

Pollutant parameter	Units	Mid-1995 baseline discharge	Estimated reductions: option A	Estimated reductions: option B	Estimated reductions: TCF
2,3,7,8–TCDD	g/yr	14.0	9.88	10.8	14.0
2,3,7,8–TCDF	g/yr	105	98.0	99.5	105
Chloroform	kkg/yr	43.6	35.5	35.5	43.6

TABLE VI–3.—BASELINE DISCHARGES AND ESTIMATED REDUCTIONS OF POLLUTANTS FOR BLEACHED PAPERGRADE KRAFT AND SODA MILLS COMPLYING WITH BAT TECHNOLOGY OPTIONS CONSIDERED [a]—Continued

Pollutant parameter	Units	Mid-1995 baseline discharge	Estimated reductions: option A	Estimated reductions: option B	Estimated reductions: TCF
12 Chlorinated phenolic pollutants	kkg/yr	51.7	42.3	44.1	51.7
AOX	kkg/yr	33,300	22,100	27,900	33,300

[a] The TCF calculations assumed that chlorinated pollutants will not be present. For all other calculations, EPA assumed that pollutants reported as "not detected" were present in a concentration equivalent to one-half the minimum level specified in 40 CFR 430.01(i) or one-half of the reported detection limit.

The effluent reductions described and shown above are used in Section VII to estimate reduced human health and environmental risk attributable to today's rules. These estimates also form the basis for estimating monetized benefits in Section VIII.

(4) Development of Limitations. The proposed BAT regulations included limitations for dioxin, furan, 12 chlorinated phenolic pollutants, acetone, chloroform, methyl ethyl ketone (MEK), and methylene chloride (based on BAT process changes); and limitations for color, COD, and AOX (based on BAT process changes and biological wastewater treatment). In today's rule, EPA is promulgating limitations for dioxin, furan, 12 chlorinated phenolic pollutants, chloroform, and AOX. See 40 CFR 430.24(a)(1). As discussed in Section VI.B.3. above, EPA is not promulgating limitations for acetone, MEK, methylene chloride, or color. EPA intends to promulgate effluent limitations guidelines and standards for COD in a later rulemaking.

In addition to the new effluent limitations guidelines and standards for the Bleached Papergrade Kraft and Soda subcategory promulgated today and discussed immediately below, mills in this subcategory continue to be subject to existing limitations and standards for pentachlorophenol and trichlorophenol (now denominated as supplemental limitations and standards). These mills continue to have the opportunity to be exempt from these supplemental limitations and standards if they certify to the permitting or pretreatment authority that they are not using these chemicals as biocides. See 40 CFR 430.24(d).

Except where noted, the following discussion of BAT limitations also applies to EPA's procedures for setting NSPS, PSES, and PSNS for Subpart B.

(a) Performance Data. EPA revised the proposed limitations and standards based on data collected after proposal (see Pulp and Paper Mill Data Available for BAT Limitations Development, DCN 13951) and presented the revisions in the July 1996 Notice. See 61 FR at 36841–42. Today's TCDF, chloroform, and AOX limitations and standards have been further revised since the July 1996 Notice as a result of the selection of data sets used for the long-term averages, variability factors, and limitations. See DCN 14494, 14496, and Record Section 22.5. The rationale for changes in the data set selections is provided immediately below. See DCN 14487.

(i) Dioxin, Furan, and Chlorinated Phenolic Pollutants. For non-TCF mills, EPA had proposed mass-based limitations and standards for furan; in July 1996, EPA presented preliminary revised limitations and standards that were concentration-based. EPA has determined that a limitation on the concentration of furan is a more direct, and hence, a more reasonable measurement of the presence of furan than a mass-based limitation would be. When detected, furan typically is present in the effluent of Subpart B mills that use ECF bleaching at levels at or only slightly above the minimum level specified in the applicable analytical method. In this case, the value of mass-based limitations and standards are predominantly influenced by the variability in the bleach plant effluent flow rate and thus may not be a consistent and reliable measurement of the presence of furan. Since the July 1996 Notice, EPA has used one additional data set to calculate the furan limitation; this data set was from an Option B bleach line with a typical unbleached kappa number of 20. Because of this change and because of changes to assumptions used in the statistical analysis and changes to the computer programs, see Section VI.B.5.a(4)(b), the value of the furan limitations and standards has changed slightly from that presented in the July 1996 Notice.

EPA has made no changes to the limitations for dioxin and the 12 chlorinated phenolic pollutants presented in the July 1996 Notice. Upon further review after the July 1996 Notice, EPA discovered that some sample-specific minimum levels for some chlorinated phenolic pollutants were incorrectly entered into the databases. These values have been corrected. See DCN 14496, and Record Section 22.5.

EPA has determined that TCF bleaching processes do not result in the generation of dioxin, furan, chloroform or chlorinated phenolic pollutants. For this reason, EPA is not setting limitations for these pollutants as part of the voluntary alternative BAT limitations and standards promulgated today for mills that certify to the use of TCF bleaching processes. See 40 CFR 430.24(a)(2).

(ii) AOX. In the July 1996 Notice, EPA presented preliminary revised AOX BAT limitations and NSPS for non-TCF mills.

In the July 1996 Notice, EPA indicated that although it was presenting revised limitations and standards it would continue to analyze data from two mills representing the performance of BAT Option A. These data were submitted to EPA by the industry without sufficient time for the results to be reflected in the preliminary limitations and standards presented in the July 1996 Notice.

Commenters encouraged EPA to use the newly acquired data for the two Option A mills, but also questioned why certain other data in the record were not used to develop the preliminary revised AOX limitations and standards. EPA continued its analysis of the new data and obtained new information about mill operations associated with the other data addressed by comments. As a result, EPA added data from the two Option A mills to the data used to characterize the performance of Option A and added data from two other mills to the data used to characterize the performance of Option B. EPA ultimately used data from six mills to develop the AOX limitations for each option, including at least one mill for each option for which long-term monitoring data (for about one and a half years) were available. The mills used to represent each option pulp

primarily softwood and most of them subsequently bleach the pulp to high brightness (i.e., greater than 88 ISO). Tables presented in DCN 14494 show several statistics for each mill (reflecting the mill characteristics during the sampling period), including furnish, kappa number, kappa factor, brightness, type of wastewater treatment system, and approximate AOX removal in the treatment system. For a discussion of EPA's development of pretreatment standards for AOX, see section VI.B.5.c(6).

Another factor that has contributed to revisions in today's AOX limitations and standards is the adjustment for autocorrelation in the data. See DCN 14496. EPA intended that this adjustment be made to the preliminary AOX limitations presented in the July 1996 Notice; however, comments on that notice stated correctly that this adjustment had been excluded from the calculations. This oversight has been corrected in the calculations of today's final AOX limitations and NSPS.

Since proposal, EPA has gathered additional data in order to establish a final limitation for AOX for TCF bleaching processes. See 40 CFR 430.24(a)(2). EPA sampled at two mills with TCF bleaching processes, one U.S. mill and one European mill. Analytical data from sampling these two mills during periods representative of TCF processes indicate that AOX concentrations were consistently below minimum levels in bleach plant wastewaters. See DCN 14494 and DCN 14488. Therefore, EPA has concluded that TCF bleaching processes are capable of achieving concentrations less than the minimum level for AOX in process wastewaters, whether measured at the bleach plant or after secondary biological treatment, and is setting AOX limitations and standards accordingly for TCF bleaching processes. See 40 CFR 430.24(a)(2).

(iii) Chloroform. EPA proposed a monthly average chloroform limitation of 2.01 g/kkg based on sampling results from one mill that used extended delignification and complete substitution of chlorine dioxide for elemental chlorine, and that did not use hypochlorite during bleaching. Data collected by EPA after proposal indicated that bleach plant loads of chloroform did not differ between mills that used conventional pulping (Option A) and extended delignification (Option B), as long as bleaching was carried out without elemental chlorine or hypochlorite. However, these data indicate that the type of pulp washers used in a mill's bleach plant influence the partitioning of chloroform between the air and effluent. Use of low air flow washers results in less emission of chloroform to the air and greater loads of chloroform in bleach plant effluent than use of high air flow washers. See DCN 14494. In general, modern low air flow washers (such as pressure diffusion) also use less water to accomplish equivalent washing, i.e., they are more efficient than conventional vacuum drum washers (high air flow washers). See DCN 14494, and DCN 14497, Vol. I. Because of their efficient use of water and their potential to reduce non-water quality environmental impacts, EPA encourages industry to use modern low air flow washers. For this reason, EPA developed revised chloroform limitations and standards using only data from mills that use low air flow washers. In the July 1996 Notice, EPA presented a revised bleach plant monthly average chloroform limitation of 2.80 g/kkg. This limitation was developed using data from four mills that did not use elemental chlorine or hypochlorite during bleaching, and that used low air flow bleach plant washers.

EPA received comments that the revised chloroform limitations and standards were not consistently achievable by mills with the process technologies serving as the basis for Options A and B. As a result of these comments, EPA re-evaluated the chloroform limitations and standards presented in the July 1996 Notice.

EPA has revised the long-term average and variability factors used to calculate the chloroform limitations and standards after considering data from five mills that did not use elemental chlorine or hypochlorite during bleaching and that used low air flow bleach plant washers (data from four of these mills were used in the July 1996 Notice). In developing the long-term average, EPA used data from two mills that bleach pulp to a high brightness (88 to 90 ISO). In developing the variability factors, EPA also considered data from the other three mills with low air flow washers to obtain a more realistic estimate of variability associated with operating low air flow washers. Two of these mills bleach pulp to a lower brightness (80 to 85 ISO). EPA believes that the resulting limitations and standards can be met by all well-operated and maintained ECF mills regardless of the type of bleach plant washers used. (EPA's revised bleach plant monthly average chloroform limitation is now 4.14 g/kkg.) The data in the record indicate that it is highly unlikely that a mill employing elemental chlorine or hypochlorite in its bleach plant could comply with the chloroform limitations promulgated in this rule. See DCN 14494.

(iv) COD. As discussed in VI.B.3.d., EPA is reserving limitations for COD at this time.

(b) Changes to Statistical Methodology. After the July 1996 Notice, EPA performed a detailed review of the results of the statistical analyses, the documentation of the statistical methodology, the computer programs, and the data for all of the limitations and standards. As a result of this review, EPA revised the assumptions regarding statistical analysis of data to ensure that long-term averages for TCDF and chloroform were greater than or equal to the minimum level of the analytical methods. EPA made other revisions to the statistical assumptions and the computer programs that resulted in minor changes to the values of the limitations and standards. All of these revisions are identified and described in the Statistical Support Document for the Pulp and Paper Industry: Subpart B, DCN 14496. In the record, EPA has also provided detailed responses to comments about the statistical methodology. See DCN 14497, Vol. VI.

(c) Definition of Limitations and Standards Expressed at Less Than the Minimum Level. In today's rulemaking, EPA is establishing limitations and standards for Subparts B and E for 12 chlorinated phenolic pollutants and dioxin that are expressed as less than the minimum level ("<ML"). (EPA is also expressing today's AOX limitations and standards for TCF processes as "<ML.") The limitations and standards hereafter are referred to as "ML limitations." The "ML" is an abbreviation for the minimum level identified in § 430.01(i) of today's rule for the analytical methods that EPA used to determine the level of pollution reduction achievable through the use of BAT, NSPS, PSES and PSNS model technologies for the 12 chlorinated phenolic pollutants, dioxin, and, for alternative TCF technologies, AOX. (For Subpart E, limitations and standards for furan and AOX are also expressed as "<ML".) EPA intends for mills subject to ML limitations to have pollutant discharges with concentrations less than the minimum levels of the analytical methods specified today in 40 CFR 430.01(i).

In general terms, the ML is the level at which the analytical system gives recognizable signals and an acceptable calibration point. Method 1613 (used for dioxin and furan), Method 1650 (used for AOX), and Method 1653 (used for the chlorinated phenolic pollutants) provide precise definitions of the ML

relative to those analytes. See 40 CFR 430.01(i). In the proposal and the July 1996 Notice, EPA referred to the ML limitations as "ND limitations." EPA has changed the terminology, but not the concept, in response to comments that the terminology was potentially misleading. This section provides a discussion of ML limitations. Compliance with the ML limitations is discussed in Section VI.B.8.c(2).

EPA expects that future analytical methods will be more sensitive than today's methods, and their minimum levels will have values that are less than those for the analytical methods identified today in § 430.01(i). However, the analytical methods (and their minimum levels) specified in § 430.01(i) were used to chemically analyze the wastewaters from mills with the BAT, NSPS, PSES, and PSNS model technologies selected today for Subparts B and E. EPA used the data from these chemical analyses to determine that today's ML limitations were technically and economically achievable. EPA is unable to determine, based on the data from these chemical analyses, whether more stringent limitations (that is, limitations with values or associated with minimum levels less than the minimum levels published today in § 430.01) would be technically and economically achievable. To determine whether the technologies are capable of achieving more stringent limitations, EPA would need to evaluate data from chemical analyses using these future more sensitive methods. Those data obviously are not available today. Until any further revision of today's limitations and standards for subparts B and E, the limitations for these analytes will continue to be associated with the minimum levels specified today in Section 430.01(i).

Table VI–4 identifies the analytical methods used to generate the data for today's rule. The minimum levels in this Table are established by the analytical methods and have been validated by use.

TABLE VI–4.—ANALYTICAL METHODS AND MINIMUM LEVELS FOR REGULATED POLLUTANTS

Pollutant	Method	Minimum level
2,3,7,8-TCDD	1613	10 pg/L
2,3,7,8-TCDF	1613	10 pg/L
Trichlorosyringol	1653	2.5 ∝g/L
3,4,5-trichlorocatechol	1653	5.0 ∝g/L
3,4,6-trichlorocatechol	1653	5.0 ∝g/L
3,4,5-trichloroguaiacol	1653	2.5 ∝g/L
3,4,6-trichloroguaiacol	1653	2.5 ∝g/L
4,5,6-trichloroguaiacol	1653	2.5 ∝g/L
2,4,5-trichlorophenol	1653	2.5 ∝g/L
2,4,6-trichlorophenol	1653	2.5 ∝g/L
Tetrachlorocatechol	1653	5.0 ∝g/L
Tetrachloroguaiacol	1653	5.0 ∝g/L
2,3,4,6-tetrachlorophenol	1653	2.5 ∝g/L
Pentachlorophenol	1653	5.0 ∝g/L
AOX	1650	20 ∝g/L

(d) Limitations. Table VI–5 presents the final effluent limitations for Options A and B for the Bleached Papergrade Kraft and Soda subcategory that are based on in-plant process changes. These limitations are based on data obtained from bleach plant effluent prior to mixing with other mill wastestreams.

TABLE VI–5.—BLEACHED PAPERGRADE KRAFT AND SODA LIMITATIONS COMPARISON OF OPTIONS A AND B

	Daily maximum limitation		Monthly average limitation	
	Option A	Option B	Option A	Option B
TCDD (pg/L)	<ML	<ML	N/A	N/A
TCDF (pg/L)	31.9	31.9	N/A	N/A
Chlorinated Phenolic Pollutants* (∝g/L)	<ML	<ML	N/A	N/A
Chloroform (g/kkg)	6.92	6.92	4.14	4.14

* Trichlorosyringol, 2,4,5-trichlorophenol, 2,4,6-trichlorophenol, 3,4,5-trichlorocatechol, 3,4,5-trichloroguaiacol, 3,4,6-trichlorocatechol, 3,4,6-trichloroguaiacol, 4,5,6-trichloroguaiacol, tetrachlorocatechol, tetrachloroguaiacol, 2,3,4,6-tetrachlorophenol, and pentachlorophenol.

ML or Minimum level—the level at which the analytical system gives recognizable signals and an acceptable calibration point. See 40 CFR 430.01(i).

N/A Not applicable.

EPA did not establish monthly average limitations and standards for dioxin and the 12 chlorinated phenolic pollutants because the daily maximum limitations and standards for these pollutants are expressed as less than the Minimum Level (<ML). (The same is true for AOX limitations for TCF processes.) The purpose of a monthly average limitation is to require continuous dischargers to provide better control, on a monthly basis, than required by the daily maximum limitation. However, for these pollutants, today's analytical methods cannot measure below the minimum levels associated with the daily maximum limitations. Thus, even if a permitting or pretreatment authority requires more frequent monitoring for these pollutants than the monthly monitoring frequencies specified in today's rule, see 40 CFR 430.02, monthly average limitations would still be expressed as <ML.

EPA did not establish a monthly average limitation for furan because a

monthly average limitation would be based on the assumption that a mill would be required to monitor more frequently than once a month. For the reasons set forth in Section VI.B.8.c(4)(b), EPA believes that one monthly monitoring event is sufficient; however, if permitting or pretreatment authorities choose to require more frequent monitoring for furan, they may set monthly average limitations and standards based on their best professional judgment. See, e.g., 40 CFR 430.24(a)(1), footnote b. Today's rule requires mills to monitor for chloroform four times per month (i.e., weekly); therefore, both daily maximum and monthly average limitations are presented.

EPA has also calculated both daily maximum and monthly average limitations for AOX based on Option A, Option B, and TCF bleaching processes. These limitations are presented in Table VI–6. Today's rules require AOX to be monitored every day during the month. See 40 CFR 430.02(a). Annual average limitations for AOX apply only to non-continuous discharges. The alternative TCF effluent limitations apply only to AOX and are expressed as "<ML."

TABLE VI–6.—BLEACHED PAPERGRADE KRAFT AND SODA AOX LIMITATIONS

[Comparison of Options A and B, and Alternative TCF Limitations]

	Option A (kg/kkg)	Option B (kg/kkg)	Alternative TCF limitations (kg/kkg)
Annual Average	0.512	0.208	N/A
Monthly Average Limitation	0.623	0.272	N/A
Daily Maximum Limitation	0.951	0.476	<ML

In order for a fiber line to qualify for the voluntary alternative TCF limitations, the discharger must certify to the permitting authority, as part of its NPDES permit application, that the fiber line bleaches pulp exclusively with TCF bleaching processes. See 40 CFR 430.24(a)(2). (A fiber line that swings between ECF and TCF bleaching processes, for example, would not be eligible for these alternative effluent limitations because dioxin and other chlorinated organic pollutants will be generated at least some of the time and therefore need to be controlled.) EPA decided not to promulgate an additional requirement, as it had proposed, that would have required dischargers to provide monitoring results for three composite bleach plant wastewater samples for dioxin, furan, and the 12 chlorinated phenolic pollutants and three grab samples for chloroform in order to qualify for those limitations. See 58 FR at 66195. EPA believes that the additional proposed requirement is unnecessary because EPA has no reason to believe that a discharger would falsify its TCF certification and because a discharger certifying to TCF processes at a particular fiber line is required in any case to notify the permitting authority if it converts the fiber line in whole or in part to bleaching processes employing chlorine or chlorine-containing compounds. As a result of this notification, the discharger's TCF-based permit limits would need to be modified to reflect the new processes. See, e.g., 40 CFR 122.21(g)(3), 122.21(g)(7), and 122.41(l).

(5) Selection of BAT/PSES Technology Basis. After considering all of the technology options described in the December 1993 proposal and the July 1996 Notice in light of the factors specified in section 304(b)(2)(B) of the Clean Water Act, EPA has selected Option A as its technology basis for the BAT limitations promulgated today for Subpart B. For the reasons set forth below, EPA has also selected Option A as its technology basis for the PSES promulgated today for Subpart B. (For a discussion of PSES options, parameters, and EPA's pass-through analysis, see Section VI.B.5.c.) The record establishes that Option A is technically available. See the Supplemental Technical Development Document, DCN 14487. As discussed in more detail below, EPA has also concluded that it is economically achievable. Further, EPA has determined, for the reasons set forth in Section VII, that Option A has no unacceptable adverse non-water quality environmental impacts. Finally, EPA determined that Option A achieves greater environmental benefits than any other economically achievable technology considered by EPA and, for that reason, also represents the best technology among those considered.

EPA considered the age, size, processes, other engineering factors, and non-water quality environmental impacts pertinent to mills in this subcategory for the purpose of evaluating the BAT and PSES technology options. None of these factors provides a basis for selecting different technologies than EPA has chosen as the basis for today's BAT limitations and PSES.

In order to evaluate economic achievability, EPA concluded that it was appropriate to examine BAT/PSES in view of the MACT requirements also being promulgated today for mills subject to subpart B. As a general matter, when evaluating the economic impact of the candidate BAT/PSES technologies, EPA generally looks at the industry as it exists at the time the decision is made. In this industry, subpart B mills will be subject to significant additional costs as a result of today's MACT I rule. See Section VIII. Therefore, although EPA has not ascribed MACT I costs to the BAT/PSES costs of today's rule, EPA is taking those costs into account when considering the total impact of the various BAT/PSES options on subpart B mills. This is particularly appropriate here because EPA undertook this Cluster rulemaking in order to consider at one time a range of air and water controls and their total economic consequences, among other things. Thus, EPA believes that its BAT/PSES analysis more accurately reflects the actual costs and economic impacts that mills in the Bleached Papergrade Kraft and Soda subcategory will experience. EPA also performed its economic achievability analysis based on the impact of BAT/PSES costs without considering the impact of the MACT I rule on subpart B mills. This analysis did not change EPA's final conclusions. Additionally, in response to comments, and because more information is now available regarding estimated costs, EPA also considered the economic impacts of the MACT II requirements being proposed at this time. The additional consideration of projected MACT II costs also does not alter EPA's determination of economic achievability in this instance.

EPA has determined that the selected BAT/PSES model technology (Option A)

is economically achievable for the Bleached Papergrade Kraft and Soda subcategory as a whole for several reasons. When EPA considered the effect of BAT/PSES compliance in light of the MACT I rule on subpart B mills, EPA estimated that the selected BAT/PSES Option would cause two mill closures, with related direct loss of 900 jobs and a $275 million decrease in shipments, and no firm failures that are likely to result in additional job loss. (See Section VIII.F and Table VIII–4 for other economic impacts associated with the selected BAT/PSES option, with and without MACT I compliance costs.) The number of closures (two) is less than 3 percent of the affected mills (86) in the subcategory. The loss of jobs associated with these closures is about one percent of subcategory employment. EPA believes that, even with these projected impacts, the selected BAT/PSES is economically achievable for this subcategory as a whole. When the cost of the MACT I rule on subpart B mills is not considered, the selected BAT/PSES would cause one mill closure and no firm failures they are likely to result in additional job loss. See Section VIII.E. For confidentiality reasons, related losses of jobs and shipments cannot be disclosed in this **Federal Register** notice, but are described in the CBI portion of the record.

EPA concluded that Option B is not economically achievable for the Bleached Papergrade Kraft and Soda subcategory as a whole. When EPA considered the effect of BAT/PSES compliance in light of the MACT I rule on subpart B mills, EPA estimated that Option B would cause four mill closures, with a related direct loss of up to 4,800 jobs, and a $1.3 billion decrease in shipments, and one or more firm failures that are likely to result in additional job loss. (See Section VIII.F and Table VIII–4 for other economic impacts associated with Option B with and without MACT I compliance costs.) EPA estimates that when the cost of the MACT I rule is not considered, Option B would cause two mill closures, with a related direct loss of 900 jobs and a $275 million decrease in shipments, and one or more firm failures. See Section VIII.F.1.

While the increased number of closures and related job losses associated with Option B are strong indicators of economic unachievability, the potential firm failures (i.e., bankruptcies) associated with this Option are particularly problematic. For each option, EPA's bankruptcy analysis focuses on whether each affected company can afford to make the collective investment required to install the technology upon which the option is based for all of its facilities. The substantially higher capital cost associated with Option B results in the potential failure of one or more firms that Option A does not cause. In most cases, requirements to raise capital to upgrade each mill to meet Option B limitations and standards may seriously jeopardize some companies' ability to cover interest on the new investments as well as other costs. In other words, some companies with insufficient cash or equity resources to cover the costs of these upgrades may be in jeopardy of bankruptcy. It takes an event of considerable magnitude to induce bankruptcy in a firm. The fact that Option B, even when considered without regard for the impact of the MACT I rule on this subpart, is projected to drive one or more firms into bankruptcy indicates to EPA the significant magnitude of Option B's capital requirements. In EPA's view, the overall effect of Option B on those firms would be substantial. See Section VIII.F. For a more detailed discussion of EPA's firm failure analysis, see the Economic Analysis, Chapter 6 (DCN 14649).

The magnitude of the effects that may arise from large firm bankruptcies is a substantial indicator of the economic unachievability of Option B. The negative effects are indefinite and unquantifiable, but EPA has reason to believe, based on the recent history of the domestic pulp and paper industry, that they are likely to be significant. The effects include, as examples, stock price turmoil, reduced workforces, and foreign ownership of formerly American-owned assets. Which impacts occur would depend on the responses of the potentially affected firm(s) to the increased costs. Companies that enter bankruptcy or near-bankruptcy are more likely to see their stock prices fall, causing substantial loss of investor value and possibly becoming the target of a hostile takeover by a domestic or foreign company. Recent history of hostile or friendly takeovers shows that the acquiring companies subsequently divested themselves of unproductive assets, closed a number of mills and eliminated over 15,000 jobs, affecting both smaller and larger communities, with the most devastating consequences on the smaller communities. Some companies may downsize some operations without closing any mills, thus potentially causing job losses in communities that depend on the mills directly or indirectly for their economic well-being. The potential job losses associated with the likely firm failure(s) represent an unacceptably large portion of the employment losses associated with this option for the Bleached Papergrade Kraft and Soda subcategory. See DCN 14379, 14382, and 14388 (contained in CBI record). In addition, weaker companies might be forced to sell off blocks of assets, or their corporate existence might be endangered. Companies may choose to close marginal plants to avoid the cost of upgrade or to sell off mills both to avoid the costs of upgrade and to raise capital to upgrade the remaining mills. Closed mills' equipment could be sold to overseas companies, who could initiate low cost pulp or paper production and gain market share from U.S. firms as a result. Foreign companies acquiring U.S. mills might close or alter those mills to gain market share (although such behavior is not necessarily economically efficient). Substituting foreign for domestic production means an additional loss of jobs and income for Americans. See Economic Analysis, Chapter 6 (DCN 14649).

EPA also considered the effects of delaying the implementation of Option B for five years. EPA acknowledges that the uncertainties of the pulp and paper market and the financial circumstances of individual firms make questionable the validity of any assumptions regarding the relative effects of a five-year delay. EPA's evaluation of delaying the implementation of Option B for five years involves consideration of discounting Option B costs for five years, the expected industry price and revenue cycle, and resulting aggregate costs, closures, and firm failures. EPA has determined, due to expected effects of the industry cycle, that deferring the costs of this technology for five years would not appreciably reduce the economic impacts for this subcategory as a whole compared to immediate compliance. See Economic Analysis, Chapter 6 (DCN 14649). For example, EPA found that under the most likely scenario (in which the costs of complying with MACT I are taken into account), the same number of mills (four) would be predicted to close even if implementation of Option B were delayed for five years. Firm failure predictions could not be made for five years hence because the analysis is based on several financial components, each of which may change dramatically and unpredictably in the interim.

Based on the above discussion, EPA concludes that only the selected BAT/PSES technology option—Option A—is economically achievable today for the Bleached Papergrade Kraft and Soda subcategory as a whole. EPA acknowledges that the number of

predicted closures attributable to Option B, when considered without regard for the impact of the MACT I rule on subpart B mills, is the same as the number of predicted closures under Option A when MACT I impacts are considered. (This is also true for job losses and effects on shipments.) However, EPA does not believe that these impacts alone are a compelling decision basis for this rulemaking. Not only would such an analysis fail to account for the real-world economic impacts of the concurrent MACT I rulemaking, but the closures and related impacts by themselves fail to express the total economic impacts EPA predicts for Option B. For the reasons described above, EPA concludes that it is appropriate to take into account the potential firm failures attributable to Option B in this rulemaking. Further, EPA concludes that it is appropriate in this rulemaking to base the economic achievability determination on the total economic impacts (the closures and the projected firm failures, coupled with predicted regional and market impacts) of its BAT/PSES options on the industry. Those total economic impacts constitute the principal and deciding difference between the selected BAT/PSES technology basis and Option B. Based on that conclusion, EPA has determined that only Option A is economically achievable for subpart B as a whole, both when the impacts of compliance with the MACT I rule are considered and when they are not.

EPA is also rejecting Option B because its capital costs are simply too high when compared to Option A. Implementation of Option B would result in capital costs that are more than $1 billion greater than those associated with Option A. EPA believes that this consideration is particularly relevant in this rulemaking for several reasons. First, these Cluster Rules represent the fourth set of effluent limitations guidelines and standards promulgated for subpart B mills. Since 1977, the industry has incurred substantial capital costs to achieve its current level of pollutant control and has achieved significant pollutant loading reductions. This is also the first pulp and paper regulation to employ process changes, rather than treatment technologies, as the core of its model BAT/PSES technology. EPA is authorized, in the exercise of its discretion, to consider these factors as the Administrator deems appropriate in selecting BAT. See CWA section 304(b)(2)(B). For all of these additional reasons, EPA has concluded that Option B is not the best available technology economically achievable for subpart B at this time.

EPA also evaluated the economic achievability of TCF process technologies for subpart B mills. EPA concluded that the annualized cost of retrofitting existing sources for TCF is substantially greater than the annualized cost of Option B (regardless which bleaching chemicals are used), with additional impacts ranging from seven estimated closures and 7,100 job losses to the potential that a greater number of firms would be placed in jeopardy of bankruptcy. See Section VIII.F. (When this option is considered in light of MACT I compliance costs, the economic impacts would be even greater. See id.) EPA, therefore, concluded that TCF bleaching processes are not economically achievable for the subcategory as a whole at this time. Nevertheless, EPA is promulgating voluntary alternative BAT limitations and PSES based on TCF bleaching processes in order to encourage mills to use this technology whenever possible. See 40 CFR 430.24(a)(2), 430.26(a)(2).

EPA determined that Option A is the best technology because no other option that was both available and economically achievable resulted in greater reductions in effluent loadings for dioxin, furan and other significant pollutants of concern. (See 58 FR at 66110 for other options considered at proposal.) For a discussion of the effluent reduction benefits associated with Option A, see Section VIII.G.

(6) Point of Compliance Monitoring. EPA is requiring mills in subpart B to demonstrate compliance with BAT limitations for dioxin, furan, chloroform, and 12 chlorinated phenolic pollutants inside the discharger's facility at the point where the wastewater containing those pollutants leaves the bleach plant. EPA is authorized by the Clean Water Act and EPA's regulations at 40 CFR 122.44(i), 122.45(h), and 125.3(e) to specify an in-plant point of compliance monitoring for technology-based limitations. Hereafter, EPA refers to the BAT limitations for which compliance must be demonstrated in-plant as "in-plant limitations." As set forth in more detail below, EPA is establishing in-plant limitations on bleach plant effluent because limitations imposed on those pollutants at the point of discharge are impractical and infeasible as measures of the performance of process technologies representing the technology-based levels of control. Moreover, in-plant effluent limitations are consistent with the MACT standards for chloroform, which independently require achievement of BAT limitations on dioxin, furan, chloroform and the 12 chlorinated phenolic compounds at the bleach plant (in addition to compliance with AOX limitations) in order to ensure that the removals represented by the MACT technology floor—complete substitution of chlorine dioxide for elemental chlorine and elimination of hypochlorite—are attained.

Mills using the model BAT technology, described in section VI.B.5.a(1), are able to achieve at the bleach plant concentrations of dioxin and the 12 chlorinated phenolic pollutants at levels below the minimum levels of currently available analytical methods. Furan concentrations, in turn, are very near the analytical minimum levels. (At the end of the pipe, furan in many mills' effluent cannot be detected by available analytical methods.)

Because only 10 to 40 percent of the wastewater discharged by mills in subpart B originates in the bleach plant, (see the Supplemental Technical Development Document, DCN 14487) the concentrations of pollutants in the final effluent would be one-tenth to two-fifths of their concentrations at the bleach plant. In the biological wastewater treatment system, the pollutants may be present but in concentrations below the applicable analytical minimum levels. When they are discharged to receiving streams, however, dioxin and furan bioaccumulate in aquatic organisms. Were EPA to allow compliance monitoring of the final effluent, there would be no way to determine whether the bleach plant effluent has been adequately controlled or whether the effluent has simply been diluted below the analytical minimum level by the other flows. Diluting pollutants in this manner rather than preventing their discharge is inconsistent with achieving the removals represented by the technology-based levels of control, and hence with the purpose of the BAT limitations. It is also inconsistent with the goals of the Clean Water Act in general. See sections 101(a) and 301(b)(2)(A). While no mill is required to install EPA's model BAT technology, establishing limitations at the bleach plant is the only way EPA can ensure that none of these pollutants will be discharged at concentrations greater than the levels achievable through implementation of the best available technology. See *E.I. du Pont de Nemours & Co.* v. *Train,* 430 U.S. 112, 129 (1977).

With respect to the 12 chlorinated phenolic pollutants, EPA acknowledges that these pollutants could be degraded by biological treatment of the facility's combined wastewater. However, the

same process technologies necessary to address dioxin and furan also reduce the levels of chlorinated phenolic pollutants to concentrations below minimum levels at the bleach plant. Commenters have supplied no data showing that the chlorinated phenolic pollutants should or indeed, as a practical matter, could be segregated from the dioxin- or furan-bearing wastestreams in order to utilize a mill's secondary treatment system fully. Nor is there any assurance that BAT limitations for these pollutants, if monitored at the end of the pipe, would be achieved by treatment rather than simply by the effects of dilution. See 40 CFR 122.45(h). Thus, EPA believes that it is appropriate to require compliance monitoring for the BAT limitations on the 12 chlorinated phenolic pollutants at the point they most easily can be achieved and measured—at the bleach plant.

In the case of chloroform, in-plant limits are authorized by 40 CFR 122.45(h) because they offset the effects of dilution, in this case, the occurrence of uncontrolled volatilization. In other regulatory contexts, EPA recognizes that dilution includes not only mixing a pollutant of concern with other wastestreams, but also mixing it with excess air in the form of uncontrolled volatilization. See 52 FR 25760, 25778–79 (July 8, 1987). Volatilization, like dilution, does nothing to remove, destroy, or immobilize pollutants, and for this reason is not in itself a form of treatment. id. at 25779. The policy reasons supporting that principle in the hazardous waste context similarly apply here.

Finally, EPA is setting effluent limitations at the bleach plant in order to avert the non-water quality environmental impacts caused by the volatilization of chloroform to the air and in order to be consistent with its Clean Air Act determination that the MACT floor for chloroform consists of bleach plant process modifications, i.e., complete chlorine dioxide substitution and elimination of hypochlorite as bleaching agents. Specifically, EPA is requiring under the Clean Air Act that chloroform emissions be controlled by complying with the BAT requirements for all regulated pollutants. See 40 CFR 63.445(d). Therefore, EPA has determined under its Clean Air Act authority that bleach plant technologies—and bleach plant limitations on dioxin, furan, chloroform and the 12 chlorinated phenolics—are necessary to regulate air emissions of chloroform. The situation presented here is very different from the situation EPA faced when promulgating effluent limitations guidelines and standards for the organic chemicals, plastics and synthetic fibers industrial category in 1987. See 52 FR 42522, 42658–62 (Nov. 5, 1987). In that rulemaking, the issue before EPA was whether to use in-plant limitations and standards to regulate air emissions of certain volatile and semi-volatile pollutants; EPA chose not to set in-plant requirements for that purpose because it determined that the regulation of such emissions was best accomplished in a Clean Air Act proceeding, which EPA was commencing at that time. See 52 FR at 42560–62. In contrast, EPA in this rulemaking integrated its decision-making under the Clean Water Act and the Clean Air Act expressly to address these cross-media issues. Taking into account both the air and water objectives of these Cluster Rules, EPA therefore concludes that it is highly appropriate for EPA to set effluent limitations under the Clean Water Act to correspond to and support its concurrent regulation of air emissions under the Clean Air Act.

b. New Source Performance Standards. (1) Background. The Agency proposed to revise NSPS for the Bleached Papergrade Kraft and Soda subcategory. New mills have the opportunity to incorporate the best available demonstrated technologies, including process changes, in-plant controls, and end-of-pipe treatment technologies.

(a) Definition of "New Source". EPA had proposed supplemental definitions of the term "new source," as provided in National Pollutant Discharge Elimination System (NPDES) permit program regulations found at 40 CFR 122.2 and 122.29, for the pulp and paper industry only. See 58 FR at 66116–17. EPA is codifying a definition of "new source" in Part 430 for subparts B and E. See 40 CFR 430.01(j). The new definition provides that new source performance standards are triggered by new "greenfield" mills, complete replacements of entire fiber lines (e.g., pulping and bleaching), or the construction of a new source whose processes are substantially independent of an existing source, such as a new fiber line built to supplement an existing fiber line. Specifically excluded from the definition of new source are existing mills that modify existing fiber lines for purposes of complying with either BAT limitations or PSES, and existing mills that replace entire fiber lines in order to comply with Advanced Technology BAT limitations. For more details, see Section VI.B.8.a(2).

(b) Proposed NSPS. EPA proposed NSPS for toxic and nonconventional pollutants for the Bleached Papergrade Kraft and Soda subcategory based on the combination of both oxygen delignification and extended cooking followed by 100 percent substitution of chlorine dioxide for elemental chlorine and elimination of hypochlorite (identified at proposal as Option 5). The proposed technology bases for NSPS also included the other elements described as part of BAT in VI.B.5.a(1). EPA also proposed NSPS for BOD_5 and TSS based on the single best demonstrated end-of-pipe secondary wastewater treatment system. See 58 FR at 66116–18, 66197. To encourage continuing innovation in the development of processes to reduce or eliminate the discharge of pollutants from the Bleached Papergrade Kraft and Soda subcategory, EPA also proposed alternative NSPS limits for mills adopting TCF processes. See 58 FR at 66111.

(2) Options Considered. In addition to the option proposed for NSPS, EPA considered three other options for the technology basis of NSPS for toxic and nonconventional pollutants. These options are summarized below. For further discussion of these options, see the Supplemental Technical Development Document, DCN 14487. The first alternative option is identical to BAT Option B, described above. This revised NSPS option includes extended delignification (i.e., oxygen delignification and/or extended cooking) to produce softwood pulps with a kappa number of approximately equal to or less than 20 (approximately 13 for hardwoods), followed by complete (100 percent) substitution of chlorine dioxide for elemental chlorine and elimination of hypochlorite for bleaching. EPA concluded that there are no performance differences between the proposed NSPS option and this revised option. See the Supplemental Technical Development Document, DCN 14487.

EPA also considered an ECF technology used at two U.S. mills consisting of oxygen delignification followed by ozone bleaching, enhanced extraction, and final chlorine dioxide brightening. This technology is used to produce pulps of somewhat lower brightness than market pulps. Finally, the Agency considered a TCF process technology that one U.S. mill is currently using to produce pulps with brightness up to 83 ISO.

For conventional pollutants, EPA considered the proposed NSPS option based on the single best available demonstrated end-of-pipe secondary wastewater treatment and a second option based on the best available demonstrated performance of a

secondary wastewater treatment system as characterized by the average of the best 50 percent of the existing mills in the subcategory.

(3) Option Selected, Pollutants Regulated, and Costs. EPA is promulgating NSPS for the Bleached Papergrade Kraft and Soda subcategory for toxic and nonconventional pollutants based on the NSPS option equivalent to BAT Option B. EPA has determined that Option B technology represents the best demonstrated control technology, process, operating method, or other alternative available at this time. The toxic and nonconventional pollutants regulated by NSPS are the same as those regulated by BAT. For further discussion of the NSPS model technology, the Supplemental Technical Development Document, DCN 14487.

EPA rejected as possible NSPS technologies the technologies that have not been demonstrated to achieve full market pulp specifications. EPA knows of two ECF bleach lines using ozone-based bleaching in the U.S. One line uses an OZE_oDD bleach sequence to bleach hardwood to 83 GE brightness (less than 82 ISO). The other line uses an OZE_oD bleach sequence to bleach softwood to 84 ISO, somewhat less than full market brightness. EPA collected data from this line that confirm that OZE_oD bleaching results in much lower water use and pollutant loadings than either Option A or Option B. Because of this level of performance, EPA strongly encourages further development of ozone-based bleaching sequences—as part of either ECF or TCF sequences. It is possible that lines using ozone-based bleaching sequences will achieve the AOX limits promulgated as part of the Voluntary Advanced Technology Incentives Program, which is described in Section IX of this Notice.

With respect to TCF bleaching processes, several non-U.S. mills have reported the production of TCF softwood kraft pulp at full market brightness. However, EPA's data are not sufficient to confirm that TCF bleaching processes are technically demonstrated for the full range of market products currently served by the kraft process. EPA is also unable to define a segment of the Bleached Papergrade Kraft and Soda subcategory for which TCF bleaching processes are known to be technically feasible and thus could be the basis for NSPS. EPA believes that progress being made in developing TCF bleaching processes is substantial, however, and that additional data may demonstrate that TCF processes are indeed available for the full range of market products. To this end, elsewhere in today's **Federal Register** Notice, EPA is inviting additional data and comment on the full range of market specifications currently being achieved for TCF kraft pulp (e.g., brightness, strength, and cleanliness). EPA will evaluate whether the performance of this technology will result in greater removals than the performance of the NSPS technology option being selected today. Depending on these findings, EPA will determine whether to propose revisions to NSPS based upon TCF and, if appropriate, flow reduction technologies.

In addition to NSPS relating to the Voluntary Advanced Technology Incentives Program, which is discussed below in this section, EPA is also promulgating alternative NSPS for Bleached Papergrade Kraft and Soda mills voluntarily choosing to use TCF technologies. See 40 CFR 430.25(b)(2).

For the conventional pollutants BOD_5 and TSS, EPA is basing NSPS upon the best available demonstrated performance of a secondary wastewater treatment system as characterized by the average of the best 50 percent of the existing mills in the subcategory. EPA has determined that the performance of the single best mill does not account for all sources of process-related variability in conventional pollutant generation and treatability expected in the entire subcategory, including raw materials (i.e., furnish), process operations, and final products. In selecting the final NSPS technology basis for conventional pollutants, EPA found it necessary to consider the secondary wastewater treatment performance of the best 50 percent of the existing mills in this subcategory in order to ensure that the resulting standards reflect the full range of processes and raw materials to produce the full range of products covered by this subcategory. For further discussion, see the Supplemental Technical Development Document, DCN 14487, and DCN 14497, Vol. I and II.

EPA is not revising NSPS for pH for subpart B; however, for the convenience of the permit writer, EPA has recodified the 1982 NSPS for pH as part of the table of newly promulgated NSPS for toxic, non-conventional, and other conventional pollutants. See 40 CFR 430.25(b).

In selecting its model NSPS technologies, EPA considered all of the factors specified in CWA section 306, including the cost of achieving effluent reductions. The incremental capital cost of complying with the selected NSPS for all pollutants, as compared to the costs of complying with standards based on the next best technology, BAT Option A, is only 0.5 to 2.0 percent of the total capital cost of constructing either a new source fiber line at an existing mill or a new greenfield mill. Moreover, the process technologies that form the basis for NSPS result in lower pollutant loadings requiring biological treatment. Loadings of BOD_5 from a bleach line employing NSPS will be approximately 30 percent lower than loadings from a conventional bleach line. Compared to the cost of treating wastewater from a conventional bleach line to meet current BPT/BCT effluent limitations guidelines, the cost of treating wastewater from a NSPS bleach line to meet NSPS for conventional pollutants will be the same or lower. Finally, as of mid-1995 there are 14 existing mills representing approximately 16 percent of the bleached papergrade kraft production that employ the Option B technology. For these reasons, EPA concludes that the costs of complying with NSPS for toxic, non-conventional or conventional pollutants do not present a barrier to entry. See the Supplemental Technical Development Document, DCN 14487. See also Section VIII and Chapter 6 of the Economic Analysis, DCN 14649.

The Agency also considered energy requirements and other non-water quality environmental impacts for the selected NSPS option. EPA concluded that increased chemical recovery and reduced energy consumption and operating costs would occur for this option. EPA also concluded that non-water quality environmental impacts were only marginally different than for the selected BAT technology option and are acceptable. Thus, EPA concluded that none of the statutory factors justified selecting a different NSPS model technology than the one chosen. See Section VII. See also the Supplemental Technical Development Document, DCN 14487.

EPA is also promulgating NSPS as part of the Voluntary Advanced Technology Incentives Program with standards set at the Tier II and Tier III levels. See 40 CFR 430.25(c). For a discussion of this program, see Section IX. A new source may choose to enroll in the Voluntary Advanced Technology Incentives Program at the Tier II or Tier III NSPS level and therefore to commit to achieve those standards at the time it commences operation. Alternatively, a new source may choose to commence operation at the compulsory NSPS level and then later enroll in the Incentives Program at the Tier II or Tier III level as an existing source, or enroll in the Incentives Program once Tier II or Tier III limitations are achieved.

Finally, EPA notes that the previously promulgated NSPS for the biocides pentachlorophenol and trichlorophenol

continue to apply to all new sources. See 40 CFR 430.25(d).

(4) Limitations and Point of Compliance Monitoring. EPA is promulgating NSPS for dioxin, furan, chloroform, the 12 chlorinated phenolic pollutants, and AOX for Subpart B at the levels set forth in Tables VI–5 and VI–6 for BAT Option B. See 40 CFR 430.25(b)(1). For a discussion of EPA's development of those standards (presented in the context of possible BAT limitations derived from Option B technologies), see Section VI.B.5.a(4). The numerical values of today's NSPS for BOD5 and TSS for the Bleached Papergrade Kraft and Soda subcategory have been revised from those provided in the July notice. For a discussion of these changes, see the Statistical Support Document, DCN 14496. The final NSPS for BOD_5, TSS and pH are presented in Table VI–7 below.

TABLE VI–7.—NEW SOURCE PERFORMANCE STANDARDS FOR CONVENTIONAL POLLUTANTS FOR THE BLEACHED PAPERGRADE KRAFT AND SODA SUBCATEGORY

NSPS			
Pollutant or pollutant property	Continuous dischargers		Non-continuous dischargers
	Maximum for any 1 day (kg/kkg)	Monthly average (kg/kkg)	Annual average (kg/kkg)
BOD5	4.52	2.41	1.73
TSS	8.47	3.86	2.72
pH	(1)	(1)	(1)

1 Within the range of 5.0 to 9.0 at all times.

EPA is requiring mills to demonstrate compliance with the NSPS for dioxin, furan, chloroform and the 12 chlorinated phenolic pollutants inside the discharger's facility at the point where the wastewater containing those pollutants leaves the bleach plant. See 40 CFR 430.25(e). EPA bases this decision on the reasons discussed in Section VI.B.5.a(6) for BAT limitations. EPA is not specifying a point of compliance monitoring for AOX, BOD_5, TSS, pH, or the biocides.

c. Pretreatment Standards for Existing Sources (PSES) and Pretreatment Standards for New Sources (PSNS). (1) Background. EPA proposed the same technology option for PSES as it did for BAT. This proposed option would have set PSES for the same pollutants controlled by BAT. For new indirect discharging facilities, EPA proposed that PSNS be set equal to NSPS for the toxic and nonconventional pollutants. At proposal, EPA also discussed three options for implementing the pretreatment standards. See 58 FR at 66123–25. EPA also solicited comment on whether pretreatment standards for BOD_5 and TSS were warranted to ensure that pass-through of these and other pollutants (e.g., AOX) did not occur.

(2) Pass-through Analysis for PSES and PSNS. EPA promulgates pretreatment standards for pollutants that pass through or interfere with POTWs. EPA performed a pass-through analysis as part of this rulemaking, which is summarized below. See also the Supplemental Technical Development Document, DCN 14487. EPA has determined for subpart B mills that dioxin, furan, chloroform, the 12 chlorinated phenolic pollutants, and AOX pass through POTWs. Therefore, the Agency is promulgating PSES and PSNS for these pollutants. See 40 CFR 430.26(a)(1) and 430.27(a)(1).

EPA's record shows that both direct discharging mills and POTWs accepting wastewaters from pulp and paper mills in the Bleached Papergrade Kraft and Soda subcategory operate secondary biological treatment systems. The indirect discharging mills in this subcategory contribute the majority of the pollutant loading and up to 90 percent of the flow to these POTWs. (EPA refers to these POTWs as "industrial POTWs.") EPA has reviewed data available in the record for BOD_5 and TSS, among other pollutants, and has determined that the biological treatment systems at these POTWs are comparable to the biological treatment systems operated by direct discharging mills in subpart B. See the Supplemental Technical Development Document, DCN 14487.

EPA reviewed all available data in the record to conduct a pass-through analysis. EPA compared the percent of removals achieved by subpart B mills implementing the BAT technologies to the percent of the same pollutants removed by the industrial POTWs receiving effluent from subpart B mills. EPA's record shows that dioxin and furan are not removed by biological treatment systems and so are not removed by the POTW. Therefore, these pollutants pass through untreated and are discharged to receiving streams, where dioxin and furan bioaccumulate in aquatic organisms. EPA bases this conclusion on data reported in the "104-Mill Study," which EPA undertook in cooperation with industry in 1988/89. That study shows that direct discharging bleached papergrade kraft and soda mills operating secondary biological treatment systems (without the addition of bleach plant process controls) discharge dioxin and furan in detectable quantities. When mills in that subcategory later implemented bleach plant process changes and controls comparable to the model BAT technologies considered in promulgating today's BAT effluent limitations guidelines, the data show that dioxin and furan discharges dropped below the minimum level at which those pollutants can be reliably measured. This was the case even where there was no concurrent change to the secondary biological treatment systems. (Indeed, EPA's candidate BAT technologies assume secondary biological treatment systems operating at the 1989 level). Because, as discussed above, the industrial POTWs receiving effluent from bleached papergrade kraft and soda mills operate biological treatment systems that are comparable to those operated by direct discharging mills in the "104-Mill Study," EPA concluded that subpart B mills implementing the selected in-plant BAT model technology achieve substantially greater reductions of dioxin and furan than industrial POTWs can achieve from effluent not subject to BAT-level process controls. EPA finds that in the absence of PSES equivalent to BAT levels of control, dioxin and furan would pass through POTWs. EPA also believes that the presence of these pollutants in the POTWs' secondary

sludge could possibly interfere with their sludge disposal options.

For chloroform, EPA also evaluated the removal efficiencies achieved by POTWs by comparing the removals achieved by direct discharging mills using BAT process technologies to the removals achieved by POTWs receiving effluent from subpart B mills. The record shows that, without the BAT process changes, a very high percentage of chloroform volatilizes from collection, conveyance, and aeration systems. EPA has consistently refused in these circumstances to regard such transfers of pollutants from wastewater to air as treatment. See, e.g., 59 FR 50638, 50665 (Sept. 28, 1993) (pesticides chemicals guidelines); 58 FR 36872, 36886–88 (July 9, 1993)(organic chemicals, plastics, and synthetic fibers guidelines). Therefore, because of this volatilization of chloroform in the absence of bleach plant process changes, the quantity of chloroform actually available to be removed by the POTWs' secondary treatment works is less than the quantity of that pollutant removed by the direct discharger employing BAT. Accordingly, EPA concludes that there is pass-through of chloroform in the absence of pretreatment standards for this pollutant, as well as unacceptable non-water quality environmental impacts from air emissions. For a detailed discussion of chloroform volatilization, see Section 8.8 of the Supplemental Technical Development Document, DCN 14487, and the Air Docket, No. A–92–40, Item IV–A–8.

EPA's determination that the chlorinated phenolic pollutants pass through the POTW is based on data in the record showing that the selected BAT process technology option (Option A) reduces all 12 of the chlorinated phenolic pollutants to concentrations less than minimum levels for these pollutants in bleach plant wastewaters, prior to end-of-pipe biological wastewater treatment systems. While biological wastewater treatment systems comparable to POTW treatment systems have been found to remove a portion of these chlorinated phenolic pollutants, the removals achieved are less than the removals achieved by the BAT process changes alone. Therefore, because overall chlorinated phenolic pollutant removals with implementation of the model BAT technologies are substantially greater than removals achieved by POTWs, chlorinated phenolic pollutants pass through POTWs.

EPA has also determined that AOX passes through. EPA bases this conclusion on its review of all available data regarding removals of AOX achieved by industrial POTWs that receive a majority of their flow or a majority of their BOD_5 or TSS loadings from indirect dischargers covered by subpart B. Although the data show that the performance of these POTWs in removing AOX is comparable to the performance of end-of-pipe biological treatment systems operated by direct dischargers in this subcategory, the data also show that direct dischargers meeting limitations based on the model BAT technology consistently achieve far greater AOX removals than biological treatment alone can achieve (e.g., at a POTW). (See the Supplemental Technical Development Document, DCN 14487.) Therefore, in the absence of pretreatment standards analogous to BAT, the affected POTWs receiving pulp and paper wastewaters cannot achieve the same overall removals of AOX as achieved by direct dischargers complying with the BAT limitations for AOX. The same is also true when considering removals achieved by new sources complying with NSPS. Therefore, contrary to the preliminary finding in the July 1996 Notice, EPA concludes that AOX passes through POTWs and is setting pretreatment standards for AOX for new and existing indirect discharging mills. See 40 CFR 430.26(a) and 430.27(a).

The pretreatment standards promulgated today for AOX are equivalent to the AOX loadings present in the bleach plant wastewaters of mills employing the BAT/NSPS technologies prior to biological treatment systems at direct discharging mills. EPA expects that removals achieved by indirect dischargers employing the PSES or PSNS model technology, in combination with removals achieved by biological treatment systems at POTWs, will be comparable to the removals achieved by direct dischargers complying with BAT limitations or NSPS.

In reviewing the information available in the record for the pollutants BOD_5 and TSS, EPA concluded that pollutant reductions attained by direct dischargers' biological wastewater treatment systems and by POTWs accepting similar wastewaters are comparable and that pass-through of these pollutants does not occur. As a result, EPA is not promulgating national PSES or PSNS for BOD_5 and TSS for the Bleached Papergrade Kraft and Soda subcategory. Other regulatory authorities may determine, based on a site-specific review of treatment system performance, that locally imposed limits are necessary to prevent the POTW from violating its NPDES permit. See 40 CFR 403.5.

(3) Options Considered. In this final rule, EPA considered the same process technology options and best management practices for PSES and PSNS as it did for BAT and NSPS. In a change from the proposal, EPA did not consider for PSES/PSNS the biological treatment technology that forms part of the candidate BAT and NSPS technologies. Since proposal, EPA has made new findings with respect to the pass-through of BOD_5 and TSS. EPA has also received comments indicating that the lack of sufficient land for the installation of biological treatment at some indirect dischargers makes such systems infeasible and unavailable. This finding, combined with EPA's finding that biological wastewater treatment systems at POTWs treating pulp and paper wastewaters are comparable to the biological wastewater treatment systems operated by direct discharging mills in subpart B, has lead EPA to conclude that biological wastewater treatment should not be included as part of the PSES or PSNS candidate technologies.

(4) Effluent Reductions. As discussed in Section VI.B.5.a.(3) above, after proposal EPA recalculated the effluent reductions attributable to its PSES technology options using a new baseline of mid-1995. See the Supplemental Technical Development Document, DCN 14487.

Table VI–8 shows the estimated baseline and the reduction from baseline expected if the presented options were implemented by all the existing indirect discharging mills in the subcategory (i.e., those mills to which PSES will apply).

TABLE VI–8.—BASELINE DISCHARGES AND ESTIMATED REDUCTIONS OF POLLUTANTS FOR BLEACHED PAPERGRADE KRAFT AND SODA MILLS FOR TECHNOLOGY OPTIONS CONSIDERED[a]

Pollutant parameter	Units	Baseline discharge	Estimated reductions: Option A	Estimated reductions: Option B	Estimated Reductions: TCF
2,3,7,8–TCDD	g/yr	1.25	0.92	1.00	1.25

TABLE VI–8.—BASELINE DISCHARGES AND ESTIMATED REDUCTIONS OF POLLUTANTS FOR BLEACHED PAPERGRADE KRAFT AND SODA MILLS FOR TECHNOLOGY OPTIONS CONSIDERED[a]—Continued

Pollutant parameter	Units	Baseline discharge	Estimated reductions: Option A	Estimated reductions: Option B	Estimated Reductions: TCF
2,3,7,8–TCDF	g/yr	9.47	8.94	9.04	9.47
Chloroform	kkg/yr	4.89	4.28	4.28	4.89
12 Chlorinated phenolic pollutants	kkg/yr	3.58	2.81	2.97	3.58
AOX	kkg/yr	3,010	2,100	2,600	3,010

[a] The TCF calculations assumed that chlorinated pollutants will not be present. For all other calculations, EPA assumed that pollutants reported as "not detected" were present in a concentration equivalent to one-half the minimum level of the analytical method.

(5) PSES/PSNS Option Selection. EPA is promulgating PSES and PSNS for dioxin, furan, chloroform, 12 chlorinated phenolic pollutants, and AOX based on the process technologies that form the bases for BAT and NSPS, respectively.

The Agency considered the age, size, processes, other engineering factors, and non-water quality environmental impacts pertinent to Subpart B mills in developing PSES/PSNS. None of these factors provided any basis for establishing different PSES/PSNS. EPA has no data to suggest that the combination of technologies upon which today's PSES/PSNS are based results in unacceptable non-water quality environmental impacts.

Because the costs of the selected BAT and PSES model technologies are attributable solely to process changes, the costs for an existing indirect-discharging bleached papergrade kraft and soda mill to comply with PSES are comparable to a similar direct-discharging bleached papergrade kraft and soda mill. See Section VI.B.5.a(2). As discussed in Section VI.B.5.a(5), EPA found PSES based on BAT Option A to be economically achievable. Similarly, EPA considered the cost of the PSNS technology for new mills (based on BAT Option B) and determined that such costs do not present a barrier to entry, as reflected in the barrier to entry discussion for NSPS in Section VI.B.5.b(3).

The rationale for choosing BAT Option A as the basis for PSES is set forth in Section VI.B.5.a(5). The rationale for selecting NSPS Option B as PSNS is the same as that provided in Section VI.B.5.b for selecting that model technology as the basis for NSPS for this subcategory. Although for the reasons set forth in those sections EPA is not selecting TCF bleaching processes as the model technology for PSES or PSNS, EPA nevertheless is promulgating voluntary alternative pretreatment standards based on TCF bleaching processes in order to encourage mills to use those processes when possible. See 40 CFR 430.26(a)(2) and 430.27(a)(2).

The pretreatment standards for the Bleached Papergrade Kraft and Soda subcategory also include best management practices. See 40 CFR 430.03. These regulations are described in Section VI.B.7. For a discussion of the pass through of pollutants controlled by BMPs, see Section VI.B.7. In addition, the previously promulgated PSES and PSNS for former subparts G, H, I and P for the biocides pentachlorophenol and trichlorophenol continue to apply unless the discharger certifies that it does not use those compounds as biocides. See 40 CFR 430.26(b) and 430.27(b).

(6) Limitations. With the exception of AOX, the limitations promulgated as PSES for Subpart B are identical to those promulgated as BAT limitations for this subpart. See 40 CFR 430.26(a)(1). For a discussion of the development of those pretreatment standards see Section VI.B.5.a(4).

EPA found that while end-of-pipe biological treatment systems at industrial POTWs and at direct dischargers achieve comparable removals of AOX, the total AOX removals achieved by direct discharging mills are greater because of the process changes that are part of the model BAT/PSES technologies. Therefore, EPA has established AOX pretreatment standards based on the performance of process changes alone (biological treatment is not a component of PSES/PSNS). EPA has developed AOX limits for PSES based on bleach plant data for eight mills that employ the process technologies incorporated in Option A. These pretreatment standards are presented in Table VI–9.

TABLE VI–9.—BLEACHED PAPERGRADE KRAFT AND SODA SUBCATEGORY PSES AOX LIMITATIONS

Pollutant parameter	Daily maximum limitation (kg/kkg)	Monthly average limitation (kg/kkg)
AOX	2.64	1.41

Similarly, with the exception of AOX, the PSNS promulgated for Subpart B for toxic and nonconventional pollutants are identical to the NSPS promulgated for this subpart. See 40 CFR 430.27(a)(1). For a discussion of the development of those pretreatment standards, see Section VI.B.5.a(4). EPA has developed AOX limits for PSNS based on bleach plant data for six mills that employ the process technologies incorporated in Option B. These pretreatment standards are presented in Table VI–10.

TABLE VI–10.—BLEACHED PAPERGRADE KRAFT AND SODA SUBCATEGORY PSNS AOX LIMITATIONS

Pollutant parameter	Daily maximum limitation (kg/kkg)	Monthly average limitation (kg/kkg)
AOX	1.16	0.814

(7) Point of Compliance Monitoring. For many of the same reasons set forth in Section VI.B.5.a(6) above in connection with EPA's decision to specify an in-plant point of compliance monitoring for many of the BAT parameters, EPA is requiring indirect discharging mills subject to Subpart B to demonstrate compliance with pretreatment standards for dioxin, furan, chloroform, the chlorinated phenolic pollutants, and AOX at the bleach plant. See 40 CFR 430.26(c) and 430.27(c). As is the case for direct dischargers, data for indirect discharging mills show that standards imposed at the point of discharge to the POTW would make it impractical for the permitting authority to assure that

the indirect discharger is achieving removal of the pollutants as required by the pretreatment standards. Moreover, EPA is concerned that dioxin and furan, even when present in nondetectable amounts at the point of discharge to the POTW, could pass through the POTW and accumulate in the biosolids, thus possibly interfering with the beneficial reuse of that biosolids material. The extent to which sludge can be beneficially reused is the subject of a separate ongoing rulemaking under CWA Section 405. Finally, under EPA's regulations, indirect dischargers are prohibited from substituting dilution for treatment, except where dilution is expressly authorized by the applicable pretreatment standard. See 40 CFR 403.6(d). (That is not the case here.) This prohibition theoretically could be enforced on a pollutant-by-pollutant, case-by-case basis. However, EPA is concerned that such a solution to the effluent's detection and dilution problems may impose an unnecessary financial and technical burden on POTWs.

At the time of proposal, EPA proposed that compliance with PSES/PSNS AOX limitations would be demonstrated at the point of discharge to the POTW. Since biological treatment is no longer part of the model technology for PSES/PSNS, AOX limitations based upon the performance of the PSES/PSNS technology are more appropriately set, and compliance demonstrated, at the bleach plant, prior to mixing with other wastestreams. This will reduce the burden on the pretreatment authority in implementing the PSES/PSNS limitations, as no additional allowance will need to be factored into the AOX limitations that would apply due to sources of AOX beyond the bleach plant. In this respect, the decision to establish in-plant points of compliance monitoring for all PSES/PSNS regulated parameters also furthers the goals of the Unfunded Mandates Reform Act. For all of these reasons, EPA is establishing in-plant points of compliance monitoring for PSES/PSNS on a nationwide level.

6. Papergrade Sulfite Subcategory

a. Segmentation of the Papergrade Sulfite Subcategory. In this final rule, EPA is dividing the Papergrade Sulfite subcategory into three segments to better reflect product considerations, the variation in manufacturing processes, and the demonstration of pollution prevention process changes within the category for the purpose of establishing BAT, NSPS, PSES, and PSNS. EPA's reasons for doing so are discussed in the July 1996 Notice, 61 FR at 36844–45, and in paragraphs b(1)–(2) below. EPA is promulgating final effluent limitations guidelines and standards for each segment. The three segments are:

(1) Production of pulp and paper at papergrade sulfite mills that use an acidic cooking liquor of calcium, magnesium, or sodium sulfite, unless those mills are specialty grade sulfite mills. See 40 CFR 430.51(c)(1). Mills in this segment are "calcium-, magnesium-, or sodium-based sulfite mills;"

(2) Production of pulp and paper at papergrade sulfite mills that use an acidic cooking liquor of ammonium sulfite, unless those mills are specialty grade sulfite mills. See 40 CFR 430.51(c)(2). Mills in this segment are "ammonium-based sulfite mills;" and

(3) Production of pulp and paper at specialty grade sulfite mills, or "specialty grade sulfite mills." Specialty grade sulfite mills are those mills where a significant portion of production is characterized by pulp with a high percentage of alpha cellulose and high brightness sufficient to produce end products such as plastic molding compounds, saturating and laminating products, and photographic papers. EPA considers a significant portion of production to be 25 percent or more. The specialty grade segment also includes those mills where a major portion of production is 91 ISO brightness and above. EPA considers a major portion of production to be 50 percent or more.

See 40 CFR 430.51(c)(3). In order to determine whether a sulfite mill belongs in the specialty grade segment, permitting authorities should consider the expected production mix over the full permit term. For mills that are converting to production in the specialty grade segment, EPA expects these mills will be subject to these limits prior to the time that these mills achieve the production mixes described above.

b. BAT. (1) Options Considered. EPA had proposed BAT effluent limitations for AOX and COD for the entire Papergrade Sulfite subcategory based on totally chlorine-free bleaching processes. Totally chlorine-free (TCF) bleaching processes are bleaching operations that are performed without the use of chlorine, sodium or calcium hypochlorite, chlorine dioxide, chlorine monoxide, or any other chlorine-containing compound. After concluding that the proposed technology was not demonstrated for the full range of products produced by mills using ammonium sulfite cooking liquor or for specialty grade products, EPA segmented the subcategory and considered other BAT options as set forth below. EPA also included for all segments the performance of existing secondary biological wastewater treatment as part of the basis for nonconventional and conventional pollutant effluent limitations and NSPS. For a more detailed discussion of these options, see the Supplemental Technical Development Document, DCN 14487.

(i) Calcium-, Magnesium-, or Sodium-Based Sulfite Mills. The technology option considered for papergrade sulfite products made by this segment was TCF bleaching, as proposed. See 58 FR at 66114–15. Existing TCF mills in this segment produce the same products they had been able to produce using elemental chlorine-free (ECF) bleaching processes, at up to 91 ISO brightness. Therefore, EPA did not consider ECF bleaching as a technology option for this segment, because, while technically available and economically achievable, it was not the best such technology for this segment.

(ii) Ammonium-Based Sulfite Mills. The technology options considered for this segment were TCF bleaching and ECF bleaching. ECF bleaching is any process for bleaching pulps that does not employ elemental chlorine or hypochlorite. There are numerous variations of ECF bleaching processes. The ECF process considered for the ammonium-based segment includes peroxide-enhanced extraction.

(iii) Specialty Grade Sulfite Mills. The technology bases considered for this segment were TCF bleaching and ECF bleaching. The ECF process considered for the specialty grade segment includes oxygen- and peroxide-enhanced extraction.

(2) Selection of BAT Technologies. In evaluating and selecting BAT technologies for the segments in this subcategory, EPA considered the age, size, processes, other engineering factors, and non-water quality environmental impacts pertinent to Subpart E mills. None of these factors provided a basis for selecting different BAT technologies. For each segment, EPA selected the best technology available to produce the products in each segment. Each of the selected BAT technologies is economically achievable and has no unacceptable adverse non-water quality environmental impacts. See the Supplemental Technical Development Document, DCN 14487. The reasons discussed below also support EPA's decision to select the BAT model technology for each segment as the basis for PSES for that segment.

(i) Calcium-, Magnesium-, or Sodium-Based Sulfite Mills. As proposed, EPA has concluded that TCF bleaching is the

appropriate technology basis for BAT limitations for the calcium-, magnesium-, or sodium-based segment of the Papergrade Sulfite subcategory. (The following discussion also applies to PSES.) For this segment, TCF technology consists of oxygen- and peroxide-enhanced extraction, followed by peroxide bleaching, and with all chlorine-containing compounds eliminated (e.g., elemental chlorine, hypochlorite, chlorine monoxide, etc.). Although still TCF, the bleaching sequence is a change from proposal, when TCF bleaching was based on an oxygen stage with peroxide addition, followed by a peroxide bleaching stage. This change to the TCF bleaching sequence reflects the more common approach to TCF bleaching within this segment of the Papergrade Sulfite subcategory and also reflects the technology basis of the mill from which TCF performance data have been collected. EPA also included pulp cleaning to ensure that existing product quality specifications would continue to be achieved. EPA has selected this technology because it is technically available and economically achievable for mills in this segment.

In evaluating the technical availability of TCF processes for this segment, EPA developed a database of mills in the United States and Europe that produce pulp using TCF bleaching technology. There is at least one mill in the United States and 13 in Europe using acid cooking liquors of calcium, magnesium, or sodium sulfite that are using TCF bleaching processes. Among them, these mills produce a full range of paper products at up to 91 ISO brightness using TCF bleaching. These mills are able to produce the same products using TCF technology that they produced prior to converting to TCF, with no negative impact on product quality. EPA has incorporated pulp cleaners as an element of TCF technology to ensure that pulp quality requirements are maintained. See the Supplemental Technical Development Document, DCN 14487. For these reasons, EPA concluded that TCF bleaching is technically available for the calcium-, magnesium-, or sodium-based segment. See the record at section 21.2.1. (As noted above, EPA has established a separate segment for specialty grade sulfite mills using these cooking liquors.)

In order to evaluate the economic achievability of TCF bleaching for this segment, EPA considered the costs that existing mills would incur to convert to TCF processes. However, costs for secondary biological treatment systems have not been included because these systems already are in place at direct discharging mills. (This is true for the other papergrade sulfite segments as well.) As part of that analysis, EPA also included the costs of complying with today's BMP regulations. Because of the small size of this segment, EPA is not disclosing here the estimated capital costs, operation and maintenance costs, or post-tax annualized costs for this segment in order to protect confidential business information. However, EPA has determined that no mills are projected to close and no firms are projected to fail as a result of today's BAT limitations and PSES for this segment. This result obtains both when the impacts of today's BAT/PSES are considered together with the impacts of compliance with the MACT I costs, and when they are considered alone. Therefore, EPA has concluded that TCF bleaching is economically achievable for the calcium-, magnesium-, or sodium-based sulfite pulp segment. See DCN 14376 and DCN 14388 (both CBI).

For these reasons, EPA has selected the model TCF bleaching processes described above as the basis for BAT limitations and PSES for the calcium-, magnesium-, or sodium-based sulfite pulp segment.

(ii) Ammonium-Based Sulfite Mills. EPA had proposed BAT based on TCF bleaching technology for all mills in the Papergrade Sulfite subcategory, including those mills using ammonium-based acidic cooking liquor. EPA received comments and data challenging the applicability of TCF bleaching to ammonium-based sulfite mills. After reviewing these comments and data, EPA concluded that TCF bleaching is not demonstrated and may not be feasible for the full range of products produced by ammonium-based sulfite mills in the United States. See DCN 14497, Vol. I. (The following discussion also applies to PSES for this segment.)

This conclusion is based primarily on the greater difficulty in bleaching ammonium-based sulfite pulps (especially those pulps derived from softwood) without the use of chlorine-containing compounds compared to other sulfite pulps, and the inability to maintain product specifications for certain products within this segment using TCF bleaching. TCF bleaching has not been demonstrated for products with a high percentage of ammonium-based sulfite pulp that also require low dirt count and high strength. Laboratory scale data submitted by a firm producing such products indicate that such products can be produced with elemental chlorine-free (ECF) technologies. See DCN 14497, Vol. I, DCN 14494, and DCN 14118 in the record at Section 21.11.3.

Therefore, for papergrade sulfite mills using an acidic cooking liquor of ammonium sulfite, EPA is promulgating BAT limitations and PSES based on an ECF bleaching technology. The technology basis for BAT limitations for this segment is use of dioxin- and furan-precursor-free defoamers, complete (100 percent) substitution of chlorine dioxide for elemental chlorine, peroxide-enhanced extraction, and elimination of hypochlorite. ECF bleaching also includes high shear mixing to ensure adequate mixing of pulp and bleaching chemicals. This technology basis reflects the results of laboratory trials showing the ability to produce the full range of products manufactured by mills in the ammonium segment, with acceptable final product characteristics. See the record at section 30.11, DCN 14497, Vol. I, and DCN 14494. (The only exception is specialty grade sulfite mills using ammonium cooking liquors.)

EPA is also promulgating voluntary alternative BAT limitations and PSES based on TCF bleaching processes in order to encourage mills to use this technology whenever it is consistent with their product mix. See 40 CFR 430.54(a)(2) and 430.56(a)(2). Alternative TCF limitations are also available for new sources in this segment.

In addition to finding that the ECF bleaching process described above is technically available for the ammonium-based segment, EPA has also determined that it is economically achievable. In order to evaluate the economic achievability of ECF bleaching for this segment, EPA considered the costs that existing mills would incur to convert to the ECF process under consideration. As part of that analysis, EPA also included the costs of complying with today's BMP regulations. Because of the small size of this segment, EPA is not disclosing here the estimated capital costs, operation and maintenance costs, or post-tax annualized costs for this segment in order to protect confidential business information. However, EPA has determined that no mills are projected to close and no firms are projected to fail as a result of today's BAT limitations and PSES for this segment. This result obtains both when the impacts of today's BAT/PSES are considered together with the impacts of compliance with the MACT I costs, and when they are considered alone. Therefore, EPA has concluded that ECF bleaching is economically achievable for the ammonium-based segment. See DCN 14376 and DCN 14388 (both CBI).

For the foregoing reasons, EPA has selected the model ECF bleaching processes described above as the basis for BAT limitations and PSES for the ammonium-based segment.

(iii) Specialty Grade Sulfite Mills

EPA received comments and data indicating that key pulp and product characteristics for specialty grade sulfite pulps have not been achieved using TCF bleaching technologies. Firms producing specialty grade pulps indicate that required product characteristics are achievable using certain ECF bleaching technologies. See the record at sections 19.1 and 21.11.6; DCN 25502; DCN 20071a8; DCN 14497, Vol. I; and DCN 14494. As indicated in the July 1996 Notice, EPA has continued to monitor research efforts of specialty grade pulp producers in the field of pollution-preventing process changes. These research efforts have progressed to the point where data are available at this time to promulgate limitations for this segment for dioxin, furan, and chlorinated phenolic pollutants. For specialty grade sulfite mills, the technology basis for limitations is use of dioxin- and furan-precursor-free defoamers, complete (100 percent) substitution of chlorine dioxide for elemental chlorine, oxygen- and peroxide-enhanced extraction, and elimination of hypochlorite. ECF bleaching also includes high shear mixing to ensure adequate mixing of pulp and bleaching chemicals. This technology basis reflects the results of laboratory trials showing the ability to produce the full range of products manufactured by specialty grade mills, with acceptable final product characteristics. (This discussion also applies to PSES for this segment.)

EPA is also promulgating voluntary alternative BAT limitations based on TCF bleaching processes in order to encourage mills to use this technology whenever it is consistent with their product mix. See 40 CFR 430.54(a)(3) and 430.56(a)(3). Alternative TCF limitations are also available for new sources in this segment.

In addition to finding that the ECF bleaching process described above is technically available for the specialty grade segment, EPA has also determined that it is economically achievable. In order to evaluate the economic achievability of ECF bleaching for this segment, EPA considered the costs that the one mill currently in this segment would incur to convert to ECF processes. As part of that analysis, EPA also included the costs of complying with today's BMP regulations. Because of the small size of this segment, EPA is not disclosing here the estimated capital costs, operation and maintenance costs, or post-tax annualized costs for this segment in order to protect confidential business information. However, EPA has determined that the sole existing mill in this segment is not projected to close, nor is its firm projected to fail, as a result of today's BAT limitations and PSES for this segment. This result obtains both when the impacts of today's BAT/PSES are considered together with the impacts of compliance with the MACT I costs, and when they are considered alone. Therefore, EPA has concluded that ECF bleaching is economically achievable for the specialty grade segment. See DCN 14376 and DCN 14388 (both CBI).

For the foregoing reasons, EPA has selected the model ECF bleaching process described above as the basis for BAT limitations and PSES for the specialty grade segment.

(3) Pollutant Parameters Regulated for Each Segment. (i) Calcium-, Magnesium-, or Sodium-Based Sulfite Mills. Because the Agency is promulgating BAT effluent limitations for this segment based on TCF bleaching technology, the maximum reduction in the discharge of chlorinated pollutants from bleaching operations will be achieved. This is because no chlorine or chlorine-containing bleaching chemicals are used and, hence, no chlorinated pollutants are generated during bleaching. For this reason, EPA is not setting effluent limitations for dioxin, furan, chloroform, or the 12 specified chlorinated phenolic pollutants for TCF bleaching. However, EPA is setting limitations on AOX (expressed as a level below the Minimum Level identified in today's analytical method for AOX) for mills in the calcium-, magnesium-, or sodium-based sulfite pulp segment of the Papergrade Sulfite subcategory in order to reflect the performance of TCF bleaching processes. See 40 CFR 430.54(a)(1). EPA is reserving promulgation of COD limitations for this segment until such time that sufficient performance data are available because the performance of the BAT technology basis on this parameter cannot be accurately predicted from laboratory-scale data.

(ii) Ammonium-Based Sulfite Mills. EPA is promulgating effluent limitations for dioxin, furan, and 12 chlorinated phenolic pollutants for the ammonium-based segment. See 40 CFR 430.54(a)(2). EPA is reserving promulgation of chloroform limitations, AOX limitations, and COD limitations for this segment until such time that sufficient performance data are available because the performance of the BAT technology basis on these parameters cannot be accurately predicted from laboratory-scale data. One mill is currently installing, on a full scale, the promulgated BAT technology basis. EPA expects to have data to develop chloroform, AOX, and COD limitations for this segment once this installation is complete, the mill is operating the new equipment in a routine manner, and appropriate samples are collected and analyzed.

(iii) Specialty Grade Sulfite Mills. EPA is promulgating effluent limitations for dioxin, furan, and 12 chlorinated phenolic pollutants for the specialty grade segment, based on laboratory scale data. See 40 CFR 430.54(a)(3). EPA is reserving promulgation of chloroform, AOX, and COD limitations for this segment until such time that sufficient full scale performance data are available because the performance of the BAT technology basis on these parameters cannot be accurately predicted from laboratory scale data.

(4) Costs. As discussed in the July 1996 Notice, EPA revised its cost estimates for mills in the Papergrade Sulfite subcategory by using the revised bleaching sequences outlined in paragraph (2) above. EPA also updated equipment cost curves and unit operating costs. See 61 FR at 36845. The detailed basis of these revised cost estimates are provided in the record.

The following cost estimates reflect the total costs that mills in the Papergrade Sulfite subcategory are likely to incur as a result of today's BAT limitations, PSES, and BMP regulations, and are the bases for EPA's economic impact analyses discussed in paragraph (2) above. For this subcategory, EPA's estimated capital costs are $73.8 million, operation and maintenance costs are $7 million, and post-tax annualized costs are $9.8 million. (The general and administrative costs discussed in Section VIII.B.1.c are already included here.) See Section VIII for additional discussion of costs and economic impacts.

(5) Effluent Reductions. EPA has updated the calculation of effluent reductions for each papergrade sulfite mill, adjusting the baseline to mid-1995. EPA used methodology similar to that used for the Bleached Papergrade Kraft and Soda subcategory. As a result of the BAT limitations and PSES promulgated today, EPA estimates that for the Papergrade Sulfite subcategory, discharges of dioxin and furan will be reduced by seven grams to less than one gram per year. (EPA expects no discharges of dioxin and furan from TCF bleaching.) Total discharges of chlorinated phenolic pollutants will be

reduced by 1,770 kilograms to 240 kilograms per year. As a result of the TCF limitations and PSES on mills in the calcium-, magnesium-, or sodium-based sulfite segment and as an incidental result of implementing the ECF model technology by direct and indirect discharging mills in the other two segments, discharges of AOX will be reduced by 4,010 metric tons to 370 metric tons per year. For a discussion of the environmental benefits resulting from these reductions, see Section VIII.G.2, and Chapter 8 of the Economic Analysis, DCN 14649.

(6) Development of Limitations. All of the limitations and standards promulgated today for Subpart E are expressed as "<ML." "ML" is an abbreviation for the Minimum Level identified in § 430.01(i) for the analytical methods that EPA uses to measure pollutant levels. For a more detailed discussion of ML limitations, see section VI.B.5.a.(4)(c).

In addition to the new effluent limitations guidelines and standards for each papergrade sulfite segment promulgated today and discussed immediately below, mills in the Papergrade Sulfite subcategory continue to be subject to existing limitations for pentachlorophenol and trichlorophenol. See 40 CFR 430.54(b), 430.55(c), 430.56(b), 430.57(b). These mills continue to have the opportunity to be exempt from these limitations and standards if they certify to the permitting or pretreatment authority that they are not using these chemicals as biocides. *Id.* For a discussion of these pollutants, see Section VI.B.3.f.

(i) Calcium-, Magnesium-, or Sodium-Based Sulfite Mills. Limitations for this segment were developed based on data from sampling at a European papergrade sulfite facility. (EPA did not set limitations based on performance data from the TCF U.S. mill in this segment because that mill produces sulfite pulp using hardwood furnish, which is easier to bleach than softwood sulfite pulp.) AOX was not measured at the end-of-pipe at the European facility so the AOX limitation is based on the transfer of data collected at the bleach plant effluent within that facility. This transfer is appropriate because the technology basis for the limitations, TCF bleaching, reduces AOX to concentrations below the method minimum level prior to any potential biological wastewater treatment. Therefore, since AOX is not detected above the minimum analytical level in bleach plant effluent, it should not be detected in final treated effluent.

(ii) Ammonium-Based Sulfite Mills. EPA is promulgating limitations for dioxin, furan, and 12 chlorinated phenolic pollutants for this segment. These limitations are expressed as "<ML." EPA based these limitations on industry-developed laboratory data for ECF bleaching trials supplied by an ammonium-based papergrade sulfite mill and the results from full-scale sampling at a magnesium-based sulfite mill using ECF bleaching technology. EPA was able to apply the data from the magnesium-based sulfite mill to the ammonium-based segment because ECF bleaching at magnesium-based mills will result in similar wastewater characteristics as ECF bleaching at ammonium-based mills because ECF bleaching chemistry is comparable between the two chemical bases. EPA is reserving AOX, COD, and chloroform limitations for this segment.

(iii) Specialty Grade Sulfite Pulps. EPA is promulgating limitations for dioxin, furan, and 12 chlorinated phenolic pollutants. These limitations are expressed as "<ML." The chlorinated phenolic limitations for this segment were developed from laboratory data for an ECF bleaching trial supplied by a specialty-grade sulfite mill. Data for dioxin and furan were not collected as part of this ECF bleaching trial because the mill researchers fully expected, based on the body of previous ECF bleaching research performed on sulfite pulp, that dioxin and furan would not be detected and therefore did not need analysis. For the purpose of establishing limitations for dioxin and furan in this segment, EPA is transferring laboratory data for ECF bleaching trials supplied by an ammonium-based papergrade sulfite mill. The transfer of limitations for dioxin and furan to this segment is supported by published reports that ECF bleaching of sulfite pulp will result in values of dioxin and furan in bleach plant effluent at levels below the minimum levels identified for the appropriate analytical methods. The transfer is further supported by the low levels of AOX measured (0.253 kg/ODMT) in the bleaching effluent from the specialty grade, laboratory-scale ECF bleaching trial. This AOX level suggests minimal chlorinated organics are formed during ECF bleaching of specialty grade pulp. For these reasons, EPA does not expect dioxin and furan to be present at or above the minimum level for these pollutants and is setting the limitations accordingly. EPA is reserving AOX, COD, and chloroform limitations for this segment until it has sufficient data upon which to base the limitations, because the performance of the BAT technology basis on these parameters cannot be accurately predicted from laboratory scale data.

(7) Point of Compliance Monitoring. EPA is requiring mills in the ammonium-based sulfite and specialty grade sulfite segments to demonstrate compliance with the BAT limitations on dioxin, furan, and the 12 chlorinated phenolic pollutants inside the discharger's facility at the point where the wastewater containing those pollutants leaves the bleach plant. See 40 CFR 430.54(c). EPA bases this decision on the reasons discussed in Section VI.B.5.a(6) for the Bleached Papergrade Kraft and Soda subcategory. Unless otherwise determined by the permit writer, mills in the calcium-, magnesium-, and sodium-based sulfite segment may demonstrate compliance with the BAT limitations for AOX at the end of the pipe.

c. NSPS. EPA is promulgating new source performance standards for each segment of the Papergrade Sulfite subcategory. See 40 CFR 430.55. The technology bases of NSPS for toxic and nonconventional pollutants for the three segments of the Papergrade Sulfite subcategory are the same as the model BAT technologies for those segments. For calcium-, magnesium-, or sodium-based sulfite mills, TCF bleaching technology is the technology basis for NSPS. ECF bleaching is the basis of NSPS for mills in the ammonium and specialty products segments because TCF bleaching has not been demonstrated for the full range of products made by mills in these segments. The toxic and nonconventional pollutants regulated, the limitations, and the points of compliance monitoring for NSPS for each segment are also the same as for BAT for those segments.

EPA proposed NSPS for conventional pollutants based on best demonstrated end-of-pipe secondary wastewater treatment. The treatment system with the lowest long-term average BOD_5 discharge was used to characterize the best demonstrated performance. EPA concluded that data in the record is not representative of the performance that can be achieved in the Papergrade Sulfite subcategory as a whole. For this reason, the new source performance standards for conventional pollutants promulgated today for each segment of the Papergrade Sulfite subcategory are the same as those promulgated in the 1982 NSPS regulation. See 47 FR 52006, 52036 (Nov. 18, 1982) (for former Subpart O); 48 FR 13176, 13177 (Mar. 30, 1983) (for former Subpart J).

In selecting its NSPS technology, EPA considered all of the factors specified in CWA section 306, including the cost of

achieving effluent reductions. The selected NSPS technologies are presently being employed at mills in each segment of this subcategory. Moreover, the cost of the NSPS technology is an insignificant fraction of the capital cost of a new mill (less than one percent). Finally, EPA has determined that the costs of including the selected NSPS technologies at a new source are substantially less on a per-ton basis than the costs of retrofitting existing mills. See Chapter 6 of the Economic Analysis document (DCN 14649). Therefore, EPA has concluded that such costs do not present a barrier to entry. The Agency also considered energy requirements and other non-water quality environmental impacts for the selected NSPS options and concluded that these impacts were no greater than for the selected BAT technology options and are acceptable. See the Supplemental Technical Development Document, DCN 14487. EPA therefore concluded that the NSPS technology bases selected for each segment of the papergrade sulfite segment constitutes the best available demonstrated control technology for that segment.

d. Pretreatment Standards. EPA is promulgating pretreatment standards for new and existing sources for three segments of the Papergrade Sulfite subcategory based on the BAT and NSPS technologies selected for each segment. In determining PSES, EPA considered the age, size, processes, other engineering factors, and non-water quality environmental impacts pertinent to Subpart E mills. None of these factors provided a basis for selecting different PSES technologies. For each segment, EPA selected the best technology available to produce the products in each segment. Each of the selected PSES technologies is economically achievable and has no unacceptable adverse non-water quality impacts. With respect to PSNS for these segments, EPA concluded that the selected technologies represent the best available demonstrated control technologies that are capable of producing each segment's products. EPA also concluded that there was no barrier to entry for the reasons set forth in section VI.B.6.c. above for NSPS for this subcategory.

In order to determine which pollutants to regulate under PSES and PSNS, EPA used the same pass-through analysis it employed for the Bleached Papergrade Kraft and Soda subcategory described in section VI.B.5.c(2) above. EPA concluded that dioxin, furan, and the 12 chlorinated phenolic pollutants pass through or interfere with POTW operations for the ammonium and specialty grade segments for the reasons set forth in section VI.B.5.c(2) for Subpart B. This reasoning applies because the BAT/PSES model technologies for Subparts B and E are both based on ECF process technologies; the same is also true for the NSPS/PSNS technologies (although in neither subpart does the model pretreatment technology include secondary biological wastewater treatment). Based on its pass-through determination, EPA is promulgating national pretreatment standards for new and existing sources for those pollutants for those segments. These standards are expressed as "<ML." See Section VI.B.5.a(4)(c). With respect to chloroform, COD, and AOX in the ammonium and specialty grade segments of the Papergrade Sulfite subcategory, EPA has insufficient data at this time upon which to make pass-through determinations or to set pretreatment standards. Therefore, EPA will decide whether and how to regulate these pollutants for those segments when data become available.

For the calcium-, magnesium-, or sodium-based segment, the best available technology basis is TCF bleaching. Because no chlorine or chlorine-containing bleaching chemicals are used, no chlorinated pollutants are generated during bleaching. Therefore, EPA is not establishing pretreatment standards for dioxin, furan, chloroform, and the 12 chlorinated phenolic pollutants for this segment. With respect to AOX in the calcium-, magnesium-, or sodium-based segment, EPA finds that TCF bleaching will reduce AOX discharge loads from the 1 to 3 kg/metric ton typically found at baseline to less than minimum levels, even at indirect discharging facilities with no on-site biological treatment. This reduction is greater than 99 percent, which far exceeds the AOX reduction that can be demonstrated by POTW treatment. Therefore, EPA concludes that AOX passes through for this segment and is promulgating PSES and PSNS for AOX, with the limitation expressed as less than the minimum level, or "<ML." See 40 CFR 430.56(a)(1) and 430.57(a)(1).

With respect to COD in the calcium-, magnesium-, or sodium-based segment, EPA has insufficient data at this time upon which to make a pass-through determination or to set pretreatment standards. Therefore, EPA will decide whether and how to regulate COD for this segment when data become available.

The pretreatment standards for all segments of the Papergrade Sulfite subcategory also include best management practices. See 40 CFR 430.03. These requirements are described below in Section VI.B.7.

EPA is requiring mills to demonstrate compliance with PSES and PSNS on dioxin, furan, and the 12 chlorinated phenolic pollutants for the ammonium-based sulfite and specialty grade sulfite segments inside the discharger's facility at the point where the wastewater containing those pollutants leaves the bleach plant. EPA bases this decision on the reasons discussed in Section VI.B.5.a(6) for the Bleached Papergrade Kraft and Soda subcategory.

7. Best Management Practices

The regulations promulgated today include provisions requiring mills with pulp production in the Bleached Papergrade Kraft and Soda subcategory (Subpart B) and the Papergrade Sulfite subcategory (Subpart E) to implement BMPs to prevent or otherwise contain leaks and spills of spent pulping liquor, soap, and turpentine and to control intentional diversions of those materials. These BMPs apply to direct and indirect discharging mills within these subcategories and are intended to reduce mill wastewater loadings of non-chlorinated toxic compounds and hazardous substances. For direct dischargers, EPA is authorized to establish BMPs for those pollutants under CWA section 304(e). The same BMPs will also remove, as an incidental matter, significant loadings of color and certain oxygen-demanding substances in pulping liquors that are not readily degraded by biological treatment. EPA also expects incidental reductions in conventional water pollutants and certain air pollutants as a result of the BMPs. To the extent these pollutants are present in the wastestreams subject to section 304(e), EPA has authority under that section to regulate them. In addition, EPA has independent authority under CWA sections 402(a) and 501(a) and 40 CFR 122.44(k) to require direct dischargers to implement BMPs for pollutants not subject to section 304(e). To impose these BMPs on indirect dischargers, EPA relies on section 307 (b) and (c). Finally, EPA is authorized to impose the BMP monitoring requirements under section 308(a).

EPA has determined that these BMPs are necessary because the materials controlled by these practices, if spilled or otherwise lost, can interfere with wastewater treatment operations and lead to increased discharges of toxic, nonconventional, and conventional pollutants. The practices included in this rule are known to reduce the amount of spent pulping liquor discharged to wastewater treatment

systems and to reduce the cost of process operation through increased chemical recovery. The BMPs summarized below are discussed in detail in the Technical Support Document for Best Management Practices for Spent Pulping Liquor Management, Spill Prevention and Control, DCN 14489 (hereafter "BMP Technical Support Document").

Under this regulation, mills must implement the BMPs codified at section 430.03(c). BMP requirements for new and existing direct dischargers apply when incorporated as special conditions in NPDES permits, consistent with CWA sections 304(e) and 402(a). BMP requirements for new and existing indirect dischargers are pretreatment standards; therefore, they are self-implementing. The BMPs are:

(1) Return of spilled or diverted spent pulping liquors, soap, and turpentine to the pulping and recovery processes to the maximum extent practicable as determined by the mill; recovery of such materials outside the process; or discharge of spilled or diverted material at a rate that does not disrupt the receiving wastewater treatment system;

(2) Inspection and repair programs to identify and repair leaking equipment items;

(3) Operation of continuous, automatic spill detection systems that the mill determines are necessary to detect and control leaks, spills, and intentional diversions of spent pulping liquor, soap, and turpentine. Examples of such systems are high level monitors and alarms on storage tanks; process area conductivity (or pH) monitors and alarms; and process area sewer, process wastewater, and wastewater treatment plant conductivity (or pH) monitors and alarms;

(4) Employee training for those personnel responsible for operating, maintaining, or supervising the operation and maintenance of equipment items in spent pulping liquor, soap, and turpentine service;

(5) Preparation of brief reports that evaluate spills of spent pulping liquor, soap, or turpentine that are not contained at the immediate process area and intentional diversions of spent pulping liquor, soap, or turpentine that are not contained at the immediate process area, (this requirement takes effect on the date an OMB control number is issued);

(6) A program to review any planned modifications to the pulping and chemical recovery facilities and any construction activities in the pulping and chemical recovery areas before these activities commence to prevent leaks and spills during construction;

(7) Secondary containment for spent pulping liquor bulk storage tanks. As an alternative, mills may substitute an annual tank integrity testing program, if coupled with other containment or diversion structures, in place of secondary containment;

(8) Secondary containment for turpentine bulk storage tanks;

(9) Curbing, diking, or other means of isolating soap and turpentine processing and loading areas from the wastewater treatment facilities; and

(10) Wastewater monitoring to detect leaks and spills, to track the effectiveness of the BMPs, and to detect trends in spent pulping liquor losses.

In addition, § 430.03(d) requires each mill to prepare a BMP Plan, based on a detailed engineering review of the mill's pulping and recovery operations, that specifies: (1) The procedures and the practices to be employed by the mill to meet the BMP requirements listed above, as tailored to recognize site-specific conditions; (2) the construction the mill determines is necessary to meet the BMP requirements, including a schedule for such construction; and (3) the monitoring program that will be used to meet the BMP requirements. This requirement takes effect April 15, 1999 see 40 CFR 430.03(j)(1)(i), or the date an OMB control number for this requirement is issued, whichever is later. See 40 CFR 430.03(a)(2).

Each mill must also certify to the appropriate permitting or pretreatment authority that it has prepared the Plan in accordance with the BMP regulation. See 40 CFR 430.03(f). The mill is not required to obtain approval of the BMP Plan by the permitting or pretreatment authority. *Id.* The permitting or pretreatment authority at its discretion, however, may conduct a review of the BMP Plan, BMP Plan amendments, and BMP Plan implementation.

Finally, section 430.03(h) requires mills to establish action levels (a measure of daily pollutant loading) that, when exceeded, trigger investigative and corrective action (depending on the action level exceeded) to reduce the wastewater treatment system influent mass loading. This requirement takes effect April 15, 1999 see 40 CFR 430.03.(j)(1)(iii), or the date an OMB control number for this requirement is issued, whichever is later. The purpose of the action levels is to provide a framework for monitoring the performance and effectiveness of BMPs on a continuing basis and to establish an early warning system so that mills can detect trends in spent pulping liquor, soap, and turpentine losses that might not be obvious from other sources. Under the regulation, a mill has considerable flexibility to choose its monitoring parameter. For more discussion of action levels, see the BMP Technical Support Document, DCN 14489. EPA had considered requiring all mills to employ specific statistical action levels. See 61 FR at 36847. EPA rejected this approach because it was concerned that such action levels might fail to trigger appropriate investigative and corrective actions for some mills, while being too restrictive for other mills. Instead, EPA determined that authorizing mills to choose their own monitoring parameters and to set their own action levels better accounts for the variability in organic loadings at different mills and differences in treatment plant effectiveness and evaporator capacity, among other mill-specific factors. This flexibility thus ensures that the action levels reflect the actual performance of mill-specific BMPs and procedures. In this way, EPA believes the action levels will better achieve the spill and leak control objectives of the BMP requirements. Exceedances of the action levels will not constitute violations of an NPDES permit or pretreatment standard. See 40 CFR 430.03(i)(3). However, a mill that fails to take corrective action as soon as practicable in response to the exceedances will be violating its NPDES permit or pretreatment standard. *Id.*

As set forth in § 430.03(j), the following deadlines apply: Existing indirect dischargers are required to prepare BMP Plans and implement all BMPs that do not require the construction of containment or diversion structures or the installation of monitoring and alarm systems no later than April 15, 1999. Operation of any new or upgraded continuous, automatic monitoring systems that the mill determines to be necessary (other than those associated with construction of new containment or diversion structures) must commence no later than April 17, 2000. The mill must complete construction and commence operation of any spent pulping liquor, collection, containment, diversion, or other facilities, including any associated continuous monitoring systems, necessary to fully implement BMPs by April 16, 2001. Existing indirect dischargers must establish the initial action levels by April 15, 1999, and the revised action levels as soon as possible after fully implementing the BMPs, but not later than January 15, 2002. The requirements to develop the BMP Plan and to perform other record-keeping and reporting requirements do not apply until OMB has approved the associated

information collection request. See 40 CFR 430.03(a)(2).

NPDES permits must require existing direct discharging mills to meet the same deadlines specified for existing indirect dischargers which is calculated from the date of publication. See 40 CFR 430.03(j)(1). If the applicable deadline has passed at the time the NPDES permit containing the BMP requirement is issued, the NPDES permit must require immediate compliance with the BMP requirement. *Id*. EPA believes this is appropriate because the record shows that mills can implement the substantive requirements of the BMPs—which are well-known within the industry today—without significant uncertainty or difficulty. In addition, timely implementation will avert the adverse environmental effects of uncontrolled leaks, spills, and intentional diversions. Finally, the affected mills have been on notice for several years that these requirements would likely be imposed and therefore should not be prejudiced by prompt compliance obligations. EPA expects that the compliance date for full implementation of the BMP requirements will not extend beyond five years from the effective date of the final rule because EPA expects NPDES permits for those mills to be reissued on a timely basis. With the exception of the requirement to establish action levels, which must occur not later than 12 months after commencing discharge, new direct and indirect discharging mills must prepare the BMP Plan and implement all BMPs upon commencing discharge. See 40 CFR 430.03(j)(2).

EPA believes it is reasonable to require existing indirect dischargers to establish revised action levels by January 15, 2002 and to require all new sources to establish action levels no later than 12 months after commencing discharge. These requirements apply only after full implementation of the required BMPs and reflect the amount of time EPA believes is necessary for mills to collect monitoring data regarding the effectiveness of these newly implemented practices and to perform the statistical analysis to develop the required action levels. Because the required action levels are intended to reflect normal mill operating conditions using the BMPs, they cannot be established prior to the implementation of the BMPs or, in the case of new sources, prior to commencing discharge. For a discussion of EPA's basis for the other deadlines in this rule, see the BMP Technical Support Document, DCN 14489.

The proposed regulations had included provisions for leak and spill prevention, containment, and control through the use of BMPs. See 58 FR at 66078. The comments received by EPA on the proposed rule and subsequent **Federal Register** notices generally supported the use of BMPs, but a number of comments challenged EPA's compliance cost estimates and claimed that certain requirements were too prescriptive. In particular, industry asserted:

∞ The requirement to develop BMPs should be limited to spent pulping liquor (e.g., kraft black liquor, sulfite red liquors) and should exclude kraft green and white liquors and fresh sulfite pulping liquors;

∞ The proposed regulation was overly prescriptive in general and, in particular, the requirement for secondary containment was unnecessary to meet the objectives of the proposed regulation;

∞ EPA underestimated the costs for implementing BMPs;

∞ EPA lacks the authority to establish BMPs to control pollutants that are not identified as toxic under CWA section 307(a) or hazardous under CWA section 311; and

∞ EPA lacks the authority to impose BMPs on indirect dischargers.

In response to comments, EPA undertook several initiatives to understand industry's concerns about the proposed BMP requirements; to better understand the status of the industry with respect to pulping liquor management and spill prevention and control; and to better assess the BMP compliance costs. To supplement its understanding of industry's spent pulping liquor management and spill prevention and control practices, EPA visited more than 25 chemical pulp mills in the United States and 15 mills in Canada and Europe following its 1993 proposal. These mills included bleached and unbleached kraft mills and papergrade sulfite mills (see Docket Sections 21.5.1 and 21.5.3). EPA also reviewed the results of the NCASI BMP questionnaire distributed to the industry. Questionnaire responses were received from approximately 70 bleached and unbleached kraft, soda, and sulfite mills. Through this NCASI questionnaire EPA received a substantial amount of additional information about mill practices and costs for equipment, monitoring systems, and facility modifications (see Docket Section 21.1.3). In addition, EPA held detailed discussions with stakeholders regarding options for BMPs and associated costs. Much of this information was included in the Docket and made available to the public in conjunction with the Notice of Data Availability published in the **Federal Register** on July 5, 1995 (60 FR 34938). Additional information related to development of the BMP requirements, including changes in the wording and organization of the proposed rule, was discussed in the July 1996 Notice. See 61 FR at 36835.

Based on the information and data received since proposal, EPA revised the scope of the BMP requirements to focus on control of spent pulping liquor, turpentine, and soap. The BMP requirements were restructured to allow greater flexibility in how BMPs are implemented to address site-specific circumstances in achieving meaningful prevention and control of leaks and spills. EPA also reorganized the regulatory text from that presented in the record for the July 1996 Notice to provide greater ease of use by mill operators and permit writers, and to clarify the intent of particular BMP requirements. The most significant changes since proposal are discussed below.

In December 1993, EPA proposed BMPs for seven subcategories of the pulp, paper, and paperboard industry (58 FR at 66078), all of which chemically pulp wood and non-wood fibers. EPA still believes BMPs are appropriate for each of these chemical pulping subcategories; however, to be consistent with the effluent limitations guidelines and standards promulgated in this final rule, the BMPs promulgated today are applicable only to the Bleached Papergrade Kraft and Soda and Papergrade Sulfite subcategories. EPA expects to promulgate BMPs for the remaining five chemical pulping subcategories [(Subparts A (Dissolving Kraft), C (Unbleached Kraft), D (Dissolving Sulfite), F (Semi-chemical), and H (Non-wood Chemical Pulp)] as it promulgates new effluent limitations guidelines and standards for these subcategories. Until new regulations for Subparts A, C, D, F, and H are promulgated, permit writers may wish to use the BMP regulations in this rule as a guide to issuing permits containing BMPs based on best professional judgment for mills with production covered by these other subparts. See CWA Section 402(a)(1); 40 CFR 122.44(k). POTWs may need to impose BMPs as local limits to facilities in these subcategories. See 40 CFR 403.5.

The BMP provisions in the proposed rule were structured to apply to all pulping liquors. In response to comments, EPA has revised the scope of the BMPs and for the final rule is limiting the BMP applicability to spent pulping liquors, turpentine, and soap. EPA has determined that spent pulping

liquors contain toxic components and that these materials, if uncontrolled, pass through or interfere with the operation of POTWs and may interfere with industrial wastewater treatment systems at mills that discharge directly to surface waters. EPA has excluded green, white and other intermediate pulping liquors (e.g., fresh sulfite pulping liquors) from this BMP rule because the data in the record does not indicate that these materials pass through wastewater treatment systems. Turpentine and soap are included in the BMP rule because, if spilled or lost, these materials can interfere with wastewater treatment operations and lead to increased discharges of toxic, nonconventional, and conventional pollutants.

In December 1993, EPA proposed to require mills to provide secondary containment for all pulping liquor bulk storage tanks. EPA has since determined that spill prevention can be adequately achieved for spent pulping liquor bulk storage tanks by substituting annual tank integrity testing and other containment or diversion structures (e.g., curbs and berms) in place of secondary containment. The final rule provides flexibility for mills to choose either secondary containment or annual tank integrity testing, coupled with other containment or diversion structures, to comply with this requirement for spent pulping liquor bulk storage tanks. See 40 CFR 430.03(c)(7). EPA determined that secondary containment should be required at all times for turpentine bulk storage tanks because of the extreme toxic effects a turpentine spill would have on the biological treatment system, and because the size of turpentine bulk storage tanks is such that secondary containment is easily achieved. In fact, EPA has found that most mills already provide secondary containment for their turpentine bulk storage tanks. No secondary containment is required for soap bulk storage tanks.

As discussed in the July 1996 Notice, EPA also proposed adding a requirement to the BMP regulation that would require mills to implement a monitoring program for the purpose of detecting leaks and spills, tracking the effectiveness of the BMPs, and detecting trends in spent pulping liquor losses. EPA proposed requiring mills to monitor wastewater treatment system influent for a short-term measure of organic content that can be completed on a daily basis (e.g., Chemical Oxygen Demand (COD) or Total Organic Carbon (TOC)). EPA has promulgated this requirement (see 40 CFR 430.03 (h) and (i)), but in response to comments, EPA is also allowing mills to use an alternative parameter related to spent pulping liquor losses that can be measured continuously and averaged over 24 hours (e.g., specific conductivity or color). See 40 CFR 430.03(h)(2)(i). In conjunction with this monitoring, mills are required by today's regulation to establish action levels (using the measure of daily pollutant loading) that, when exceeded, trigger investigative and corrective action, as appropriate, to reduce the wastewater treatment system influent mass loading. See 40 CFR 430.03(h).

The proposed rule would have required certification of the BMP plan by a registered professional engineer (P.E.) and approval by the mill manager. The intent of the proposed P.E. certification was to assure preparation of a comprehensive BMP Plan that is tailored to the site-specific circumstances at the mill. Industry commented that many mills have no registered professional engineers on site. For mills without a P.E. onsite, the proposed requirement would result in the plan being certified by someone not involved with the mill on a daily basis, and someone not responsible for its operation. EPA has determined that requiring certification by a P.E. is unnecessarily prescriptive and may have unintended results. The final regulation deletes the requirement for certification by a registered P.E. and now requires the BMP Plan to be reviewed by the senior technical manager at the mill and approved and signed by the mill manager. See 40 CFR 430.03(f).

The regulation was proposed to be self-implementing for both direct and indirect dischargers. EPA has revised the regulation to make it clear that BMPs imposed on direct dischargers are not self-implementing, but rather apply only when incorporated into NPDES permits. See 40 CFR 430.03(j). This is consistent with CWA sections 304(e) and 402. The final regulation remains self-implementing for indirect dischargers. *Id*.

The final regulation extends compliance schedules for plan preparation and plan implementation to grant more time for the preparation of the initial BMP Plan and installation of monitoring and alarm systems. Based on information supplied by industry regarding the time required in past efforts to develop spill prevention programs, EPA determined that 12 months was reasonable to complete the development of the BMP Plan and includes that deadline in the regulation. Similarly, EPA determined that it is reasonable to require mills to commence operation of any new monitoring systems no later than 24 months following publication of the final rule. This compliance date provides sufficient time between BMP Plan preparation and operation of new monitoring systems (i.e., 12 months) to allow implementation of BMPs in a rational and effective manner.

The final BMP regulation is less prescriptive than proposed with regard to inspection, repair and log-keeping requirements. While many of the elements included in the proposed rule remain, EPA determined that the specificity of the language in the proposed regulation could be redundant to existing practices in place at some mills and be unnecessarily burdensome. EPA believes the language in the final rule will achieve the same results as it intended in the proposed rule while allowing mills to use existing maintenance and repair tracking systems to fulfill the requirement. See 40 CFR 430.03(c).

As discussed in the July 1996 Notice, EPA used the information obtained since proposal to revise its cost estimates for BMPs. See 61 FR at 36840. At proposal, EPA's estimated costs were based on the reported total project costs for two older bleached kraft mills to install spill prevention and control systems. After adjusting the costs to reflect the size of a "typical" mill, EPA then assumed that these costs reflected the average cost incurred by bleached papergrade kraft and soda and papergrade sulfite mills to install BMPs. EPA then imputed to some mills compliance costs less than that average cost depending on the extent EPA judged they had implemented BMPs (see Technical Support Document for Proposed Best Management Practices Programs: Pulping Liquor Management, Spill Prevention and Control, November 1993. Docket Section 17.4, DCN 08307).

EPA improved its estimates of industry-wide costs for compliance with the BMP requirements in the final rule, compared to the cost methodology used for the proposed regulation. These changes were discussed in the July 1996 Notice and in the accompanying Draft Technical Support Document for Best Management Practices Programs: Spent Pulping Liquor Management, Spill Prevention and Control, May 1996 (DCN 13894). EPA's supplemental mill visits and the NCASI survey responses have resulted in a more accurate status of the existing BMP infrastructure and programs at mills. This information was used to create model BMP mill requirements for each level of mill complexity and to classify mills by complexity level. EPA then used data

provided by the industry in comments and the NCASI survey to develop unit costs for major equipment items, facility modifications, monitoring systems and BMP Plan preparation, rather than using the total project costs reported by two mills as was done at proposal. Finally, EPA incorporated the estimates of net operating and maintenance costs of BMPs into the BAT/PSES cost model. The cost model tracked the impacts of increased pulping liquor recovery on the evaporators and chemical recovery system and determined the need for equipment upgrades resulting from the combined effect of BAT/PSES process changes and BMPs. The savings from reduced load on the wastewater treatment system and increased recovery of fiber, chemicals and energy were subtracted from the BMP operating costs (i.e., increased evaporation energy, tank integrity testing, operator training, and O&M costs for new equipment).

EPA disagrees with comments asserting that EPA lacks authority to establish BMPs for pollutants that are not identified as toxic under CWA section 307(a) or hazardous under CWA section 311. First, the non-toxic and non-hazardous pollutants controlled by these BMPs are found in the same wastestreams bearing pollutants specifically identified as toxic pollutants or hazardous substances under sections 307(a) and 311 and implementing regulations. Although reductions of these pollutants are significant in environmental effect, their control is incidental to the control of all the pollutants subject to section 304(e). Second, EPA has independent authority under section 402(a)(1) to establish NPDES permit conditions, including BMPs, for any pollutant when such conditions are necessary to carry out the provisions of the statute. See 40 CFR 122.44(k). This authority operates independently of section 304(e). Indeed, when Congress enacted section 304(e) specifically for toxic pollutants and hazardous substances, it acknowledged that section 402(a)(1) already provided authority for imposing BMPs in NPDES permits. See Statement of Sen. Muskie (Dec. 15, 1977), reprinted in Legislative History of the Clean Water Act of 1977, at 453. EPA's authority to establish permit conditions under section 402(a)(1) is very broad. See *NRDC* v. *Costle,* 568 F.2d 1369, 1380 (D.C. Cir. 1977). EPA has determined that mills without an adequate BMP program, such as that codified today, may experience undetected and uncontrolled leaks and spills that could disrupt the efficiency of their treatment systems, thus resulting in exceedances of the BAT limitations and NSPS promulgated today for subparts B and E. Moreover, the BMPs control pollutants that are not explicitly regulated under BAT and NSPS. Therefore, EPA determined that BMPs applicable to all pollutants in a mill's spent pulping liquor, turpentine, and soap were necessary in order to carry out the purposes of the Clean Water Act and hence are authorized under section 402(a)(1) and 40 CFR 122.44(k). Similarly, as discussed below, BMPs are authorized as pretreatment standards for pollutants in the spent pulping liquor, turpentine, and soap when they pass through or interfere with POTW operations.

Some commenters also objected to EPA's decision to establish the BMP program by regulation rather than deferring to the case-by-case determinations of permit writers. EPA agrees that a requirement to establish and implement BMPs of the type required by this rule could be imposed on a case-by-case basis under CWA section 402(a)(1) and 40 CFR 122.44(k). However, EPA rejected this approach for a number of reasons. First, section 304(e) expressly authorizes EPA to promulgate BMPs by regulation on a categorical basis. The spent pulping liquors, soap, and turpentine covered by these BMPs contain numerous toxic pollutants and hazardous substances subject to section 304(e) and hence may be controlled by regulation. Moreover, EPA determined that implementing the BMP program by regulation is necessary to ensure that each pulp and paper mill with pulp production in subparts B or E implements the type of BMPs that EPA has determined are fundamental to an effective BMP program for this industry. While the BMP regulation is intended to provide considerable flexibility to mills in designing their BMP programs, EPA has also determined that the various BMPs specified in the regulation are necessary to assure uniform and fair application of the requirements. Finally, EPA believes that the regulation represents an appropriate and efficient use of its technical expertise and resources that, when exercised at the national level, will relieve permit writers of the burden of implementing this aspect of the Clean Water Act on a case-by-case basis.

EPA also disagrees with comments asserting that EPA lacks authority to impose BMPs on indirect discharges. These BMPs are pretreatment standards under section 307(b) and (c). Pretreatment standards for new and existing sources under section 307 are designed to prevent the discharge of pollutants that pass through POTWs or that interfere with or are otherwise incompatible with treatment processes or sludge disposal methods at POTWs. To determine whether pollutants associated with spent kraft and sulfite pulping liquors, soap, and turpentine that are indirectly discharged by mills with pulp production in subparts B or E interfere with POTW operations or pass through untreated, EPA reviewed data collected from 1988 through 1992 at a POTW that receives effluent from a bleached papergrade kraft mill. Prior to 1990–91, the mill had virtually no facilities for control and collection of spent pulping liquor leaks and spills. POTW discharge monitoring records show the fully treated effluent exhibited consistent chronic toxicity to Daphnia from April 1988 until June 1991. The data further show that the toxic effects of the POTW's effluent have been reduced since implementation by the mill of effective spent pulping liquor management and spill prevention and control. These effluent toxicity effects can be related to the wood extractive components that are measurable by COD and are found in leaks and spills of spent kraft and sulfite pulping liquors that interfere with the performance of biological treatment systems and allow toxic pollutants to pass through inadequately treated. Indeed, evidence of such interference and pass-through was found in data from this mill and the POTW, which showed higher mass effluent loadings for COD, TSS and BOD_5 before the mill implemented a BMP program. After the BMP program was implemented, mass effluent loadings of these pollutants were reduced. Data for COD, in particular, indicated that short-term interference of POTW operations previously observed at higher COD levels was being mitigated. EPA also bases its pass-through finding on an incident occurring in 1993 at a different mill where an intentional diversion of spent pulping liquor debilitated the mill's secondary treatment system and killed fish in the receiving waters. These data led EPA to conclude that inadequate management and control of leaks and spills of spent pulping liquor, soap, and turpentine interfered with POTW operations and caused pass-through of pollutants. Because direct discharging mills using these BMPs achieve very high removals and because POTWs cannot achieve similar removals in the absence of BMPs employed by the indirect discharger, EPA has determined that pollutants in spent pulping liquor, soap, and turpentine, in the absence of controls on leaks, spills, and intentional diversions, can cause disruption and interference and do indeed pass through

at POTWs. For this reason, EPA is including as part of its pretreatment standards the requirement that indirect discharging mills implement BMPs in accordance with this regulation.

8. Regulatory Implementation for Effluent Limitations Guidelines and Standards

a. Applicability of Effluent Limitations Guidelines and Standards. Effluent limitations act as a primary mechanism to control discharges of pollutants to waters of the United States. These limitations are applied to individual mills through NPDES permits issued by EPA or authorized States under section 402 of the CWA. In addition, the pretreatment standards are directly applicable to indirect dischargers. Once today's regulations become effective, the effluent limitations and standards for the appropriate subcategory must be applied in all Federal and State NPDES permits issued to direct dischargers affected by this rule. See Section 301(b)(2), 402(a). This section describes the applicability of these limitations and standards to process and other wastewaters generated by the mills in the Bleached Papergrade Kraft and Soda and Papergrade Sulfite subcategories, defines new sources subject to today's NSPS and PSNS, defines non-continuous dischargers and the applicable limitations, and describes the retention of the previously promulgated limitations and standards.

(1) Applicability of Limitations to Process and Other Wastewaters. The effluent limitations guidelines and standards for the pulp and paper industry apply to discharges of process wastewaters directly associated with the manufacturing of pulp and paper. See 40 CFR 430.00. EPA proposed a definition of process wastewater as any water that, during manufacturing or processing, comes into direct contact with or results from the production or use of any raw material, intermediate product, finished product, byproduct, or waste product. The proposed definition specifically included boiler blowdown; wastewaters from water treatment and other utility operations; blowdown from high rate (e.g., greater than 98 percent) recycled non-contact cooling water systems to the extent they are mixed and co-treated with other process wastewaters; and stormwaters from the immediate process areas to the extent they are mixed and co-treated with other process wastewaters. The proposed definition specifically provided that contaminated groundwaters from on-site or off-site groundwater remediation projects would not be process wastewaters. EPA proposed to require separate permitting for the discharge of such groundwaters. The proposed definition also specifically excluded certain process materials from the definition of process wastewater. These process materials included: Green liquor at any liquor solids level; white liquor at any liquor solids level; black liquor at any liquor solids level resulting from processing knots and screen rejects; black liquor after any degree of concentration in the kraft or soda chemical recovery process; reconstituted sulfite and semi-chemical pulping liquors prior to use; any pulping liquor at any liquor solids level resulting from spills or intentional diversions from the process; lime mud and magnesium oxide; pulp stock; bleach chemical solutions prior to use; and papermaking additives prior to use (e.g., alum, starch and size, clays and coatings). The proposed regulation then would have prohibited the discharge of these materials into POTWs or waters of the United States without an NPDES permit or other authorization.

In this final rule, EPA is promulgating a definition of process wastewater applicable to subparts B and E. In response to the comments opposing the exclusion of these process materials, EPA revised the proposed definition of process wastewaters to eliminate the exclusion of the named process materials. See 40 CFR 430.01(m). The proposed language would have effectively required "closed cycle" mills, which was not EPA's intent. The exclusion of contaminated groundwater has been retained. Because the quantity and quality of such groundwaters are likely to be highly variable on a site-specific basis, the Agency concluded that their discharge to surface waters should be regulated separately from, or in addition to, process wastewaters on a case-by-case basis. EPA also has included leachate wastewaters from landfills owned and operated by mills generating wastes associated with manufacturing or processing subject to subparts B and E, where these leachate wastewaters are commingled with other process wastewaters. These leachate wastewaters typically comprise a very small proportion of the total volume received in end-of-pipe wastewater treatment facilities. In cases where the volumes or pollutants found in leachate wastewaters are of concern, permit writers may develop individual permit limitations on a case-by-case basis. EPA's definition continues to define process wastewater in terms of manufacturing or processing. EPA has promulgated a subcategory-specific definition of process wastewater in order to clarify the applicability of subparts B and E and to assist permit writers and pretreatment authorities in developing limitations and standards. The effluent limitations guidelines and standards promulgated today do not apply to discharges that are not associated with manufacturing or processing. Any mill wishing to discharge such wastewaters would need to obtain authorization in an NPDES permit or individual control mechanism administered by a POTW.

EPA's use of the term "during manufacturing or processing" should not be taken to exclude wastewaters generated during routine maintenance, including maintenance occurring during a scheduled temporary mill shut-down. Maintenance wastewaters were not explicitly excluded from the definition of process wastewater at proposal, nor are they excluded from the definition promulgated today. Wastewaters generated during routine maintenance are a result of pulp manufacturing processes and as such are included in the definition of process wastewater.

(2) Definition of New Source. In today's rule, EPA is promulgating a definition of "new source" applicable to Part 430, subparts B and E. See 40 CFR 430.01(j). This definition restates the definition set forth in 40 CFR 122.29(b)(1), but with the additional reference to certain process changes that, in and of themselves, would not cause a mill to become a new source. See 40 CFR 430.01(j)(2). EPA intends that permit writers will consult the specific "new source" criteria in Part 430, rather than the more general criteria set forth in 40 CFR 122.29(b)(1) and 403 when determining whether pulp and paper mills subject to subparts B or E are new sources. The other provisions of 40 CFR 122.29 continue to apply to these subparts, as do 40 CFR 122.2 and 40 CFR 403.3(k). The definition of "new source" in Part 430 does not affect the definition of "new source" for purposes of the NESHAP portion of these integrated rules.

EPA is aware that application of the definitions in Part 122 to pulp and paper mills in the Bleached Papergrade Kraft and Soda and Papergrade Sulfite subcategories has sometimes caused controversy, leading to disagreement between the permitting authority and the facility whether a particular change at the mill triggers NSPS or PSNS. EPA is promulgating a definition of "new source" specifically for subparts B and E in order to set forth the specific factors relevant to a new source determination for covered mills and thus, EPA hopes, to end the disputes regarding a mill's

new source status. Indeed, the decision to promulgate subcategory-specific criteria in this rule is specifically contemplated by the general criteria codified at 40 CFR 122.29(b)(1). EPA believes this tailored definition is particularly important in view of the Voluntary Advanced Technology Incentives Program EPA is also promulgating today for subpart B mills. Through the Voluntary Advanced Technology Incentives Program, EPA is encouraging mills to install new process technologies and even to redesign bleach plant operations in order to achieve effluent reductions beyond those required at the baseline BAT level. EPA does not want existing mills that voluntarily choose to participate in the Voluntary Advanced Technology Incentives Program to be required to meet NSPS simply as a consequence of that election. Therefore, by promulgating a definition of "new source" specifically for subparts B and E, EPA hopes not only to clarify application of the Part 122 definitions but also to provide certainty to subpart B mills choosing to participate in the Voluntary Advanced Technology Incentives Program that they will not inadvertently become a new source, which would subject them to compulsory NSPS.

For the convenience of the permit writer, the definition of new source being codified in part 430 restates the three criteria already codified in § 122.29(b)(1). The first criterion provides that a source is a new source if it is constructed at a site at which no other source is located. Section 430.01 (j)(1)(i); see 40 CFR 122.29(b)(1)(i). As applied to part 430, this criterion is intended to ensure that a greenfield mill is characterized as a new source and hence is subject to NSPS or PSNS.

The second criterion specified in today's definition of new source incorporates the language of 40 CFR 122.29(b)(1)(ii) with two additions. First, it provides that a fiber line that totally replaces an existing fiber line is a new source (unless that fiber line is enrolled in the Voluntary Advanced Technology Incentives Program). Second, it includes a list of modifications that would not trigger the new source definition if made by subpart B or E mills. See 40 CFR 430.01(j)(1)(ii) and (2). This criterion provides essentially that a fiber line that is modified to comply with baseline BAT effluent limitations or that is totally rebuilt to comply with Advanced Technology BAT limitations is not a new source. (A fiber line is a series of operations employed to convert wood or other fibrous raw material into pulp. If the final product is bleached pulp, the fiber line encompasses pulping, de-knotting, brownstock washing, pulp screening, centrifugal cleaning, and multiple bleaching and washing stages.)

Among the changes specified in the regulation that alone do not cause an existing fiber line at a mill to be considered a new source are: Upgrades of existing pulping operations; upgrades or replacement of pulp screening and washing operations; installation of extended cooking and/or oxygen delignification systems or other post-digester, pre-bleaching delignification systems; and bleach plant modifications including changes in methods or amounts of chemical applications, new chemical applications, installation of new bleaching towers to facilitate replacement of sodium or calcium hypochlorite, and installation of new pulp washing systems. 40 CFR 430.01(j)(2)(i)–(iv). By expressly excluding these process modifications from the new source definition, EPA thus allows a mill to implement the baseline BAT/PSES technologies without triggering NSPS or PSNS. EPA believes that interpreting process modifications that are designed to achieve compliance with baseline BAT/PSES limitations as an existing source modification is consistent with Congress' intentions in the Clean Water Act concerning the respective roles of standards for existing and new sources.

As discussed in more detail below in connection with the third new source criterion, EPA believes it is appropriate to define a new fiber line as a new source because the construction of the new fiber line (whether to supplement or replace an existing fiber line) presents the type of pollution prevention opportunities customarily represented by NSPS. However, EPA believes it is also appropriate to treat the replacement fiber line as an existing source if that fiber line is enrolled in the Voluntary Advanced Technology Incentives Program. See 40 CFR 430.01(j)(2)(v). EPA has decided to do this because requiring the new fiber line to meet baseline NSPS requirements would defeat the purpose of the Voluntary Advanced Technology Incentives Program by undercutting the more environmentally protective pollution prevention opportunities and limitations associated with that program. In the first place, Advanced Technology BAT limitations at the Tier II and Tier III levels are more stringent than the baseline NSPS requirements; EPA's definition of new source thus is intended to allow mills to commit to greater pollutant reductions than EPA could otherwise compel and to do so incrementally while maintaining use of the existing fiber line in the interim. Similarly, the Advanced Technology BAT limitations at the Tier I level promote pollution prevention opportunities not necessarily assured by NSPS, even though the technology bases for NSPS and Tier I are similar. EPA has established different limitations for Tier I than for NSPS because the regulations are intended to achieve different objectives. The new source performance standards for AOX are more stringent because, as a statistical matter, EPA determined that this performance level reflects the best demonstrated performance by mills using the NSPS technology. The Tier I limitations for AOX, in contrast, are intended to reflect a more inclusive performance level that EPA believes existing mills employing extended delignification can achieve, in order to encourage more mills to implement extended delignification technologies. The Tier I limitations also require the recycle of filtrates to the recovery systems and impose limitations on the lignin content of unbleached pulp, which EPA hopes will promote the use of particular pollution prevention technologies and, in turn, encourage mills to look beyond Tier I to the Tier II and Tier III levels. This goal contrasts with the objective of NSPS, which simply is to compel mills to achieve certain discharge levels by any combination of technologies the mill selects, and would be defeated if the definition of new source would have the effect of moving Tier I mills into NSPS. Therefore, EPA has decided that, on balance, imposing NSPS on mills that replace fiber lines for the purpose of participating in the Voluntary Advanced Technology Incentives Program would discourage rather than encourage the long-term goal of achieving even greater environmental performance.

The third criterion appearing in the definition of new source in § 430.01(j)(1)(iii) is identical to the third criterion at § 122.29(b)(1)(iii), and provides that a source is a new source if its processes are substantially independent of an existing source at the same site. In determining whether processes are substantially independent, the permitting or pretreatment authority is directed to consider such factors as the extent to which the new facility is integrated with the existing plant, and the extent to which the new facility is engaged in the same general type of activity as the existing source. For example, if a mill operating in the Bleached Papergrade Kraft and Soda subcategory builds and operates an entirely new fiber line that permanently

supplements the capacity of an existing fiber line (and also, incidentally, increases the total quantity of pollutants discharged by the mill), the new fiber line would be considered a new source subject to NSPS.

EPA believes it is appropriate to subject a new fiber line that is substantially independent of an existing fiber line to new source performance standards because a mill designing that new fiber line has pollution prevention opportunities akin to those available to greenfield mills. For example, a mill would have the opportunity to incorporate pollution prevention principles when designing a new fiber line, including a new flow scheme and water balance. This new fiber line would provide the opportunity to take advantage of pollution prevention savings attributable to reduced chemical needs (and costs), increased energy recovery, the possibility of improving yield, and other operation and maintenance improvements.

EPA notes that a fiber line that is substantially independent of an existing fiber line is a new source even if the new fiber line is enrolled in the Voluntary Advanced Technology Incentives Program. EPA believes that this is appropriate because the supplemental fiber line increases both the mill's production capacity and its discharge of pollution to the environment. However, the fiber line could qualify for incentives if it is enrolled in the Voluntary Advanced Technology Incentives Program for NSPS at the Tier II or Tier III level.

As reflected in the July 1996 Notice, 61 FR at 36848, EPA had considered excluding from the definition of new source those mills that renovated existing fiber lines but remained at existing production levels. In response to comments, EPA has decided not to introduce production levels as a factor in determining new source status. First, taking production levels into account in determining whether an existing source becomes a new source would be a departure from current practice that EPA believes is not justified in this case. EPA believes that the new source status of a subpart B or E mill should be determined by the degree of process and production changes made at a mill's fiber lines—such as the replacement of existing digesters and bleach plants with new equipment—because those changes, not production levels, present the real opportunities for pollution prevention represented by NSPS or PSNS. Moreover, EPA agrees with comments stating that mills subject to subpart B or E frequently undergo changes in various degrees to increase production levels and that many of these changes do not result in or from substantially independent facilities or the total replacement of existing facilities. See DCN 25538 at 70–72. Therefore, the mere fact that a mill increases its production levels does not mean that it concurrently has the opportunity to install the type of advanced pollution prevention technologies represented by NSPS.

(3) Non-Continuous Discharger. EPA is changing the regulatory language defining non-continuous dischargers as it applies to subparts B and E. See 40 CFR 430.01(k)(2). EPA is also republishing, without change, the current definition of non-continuous dischargers because it continues to apply to the other subparts in part 430 and to the determination of technology-based effluent limitations on conventional pollutants for existing dischargers subject to subpart B or E. See 40 CFR 430.01(k)(1).

EPA had proposed a new definition that would have defined as a non-continuous discharger a mill that stored wastewaters for periods of at least 24 hours and that released that wastewater on a batch basis. In the final definition applicable to subparts B and E, EPA is retaining the storage component of the proposed (and existing) regulation but is not specifying a minimum 24-hour storage period because EPA determined that it had no particular significance for these subparts. However, as indicated in the July 1996 Notice, 61 FR at 36842, EPA is adding language defining as a non-continuous discharger a discharger that releases stored wastewater on a variable flow or a pollutant loading rate basis. Finally, in this new definition, EPA is clarifying that it applies to storage or release of wastewaters required by the permitting authority for the purpose of protecting receiving water quality, among other purposes. See 40 CFR 430.01(k)(2). For subparts B and E only, EPA also is eliminating the requirement in the existing regulation, at 40 CFR 430.01(c) (1996 ed.), for the NPDES authority to include maximum day and maximum 30-day average concentration limitations consistent with BPT, BCT, or NSPS limitations as appropriate. See 40 CFR 430.01(k). EPA will defer to the NPDES authority to establish maximum day and maximum 30-day average limitations that are necessary to protect receiving water quality. In later final rulemaking phases (see section II, table II–2), EPA intends to adopt for remaining subcategories the same definition for non-continuous dischargers as is being promulgated today for subparts B and E.

(4) Retention of Previously Promulgated Effluent Limitations Guidelines and Standards. As discussed in more detail in Section VI.B.2, EPA is not revising BPT or BCT effluent limitations for conventional pollutants for subparts B and E. Therefore, EPA is retaining the previously promulgated limitations for these pollutants and subparts. See 40 CFR 430.22, 430.23, 430.52, 430.53.

EPA is also retaining previously promulgated NSPS for subparts B and E because new sources that commenced operation prior to the effective date of today's NSPS remain subject to the earlier standards for ten years beginning on the date construction of the new source was completed. CWA section 306(d); see 40 CFR 430.25(a), 430.55(a).

Finally, as discussed in more detail in Section VI.B.3.f, subparts B and E include previously promulgated end-of-pipe effluent limitations guidelines and standards for pentachlorophenol and trichlorophenol. EPA is also retaining the accompanying provisions authorizing mills that do not use those chemicals as biocides to certify this fact to the permitting or pretreatment authority with the result that they would not be subject to those limitations or standards. *Id.*

In addition to today's new regulations for subparts B and E, EPA is recodifying the previously promulgated BPT, BCT, BAT, NSPS, PSES and PSNS for the other subparts of the pulp, paper, and paperboard category. These limitations regulate the discharges of BOD_5, TSS, zinc, and other analytes. Although EPA is reorganizing the former subcategories in accordance with the new subcategory designations, EPA is not changing these limitations and standards. See Section VI.B.1.

b. Determination of Effluent Limitations for Permits. (1) Definition of Production and Production-Normalizing Parameters. The Agency has based some of the effluent limitations guidelines and standards promulgated today on pollutant concentrations. Others are mass-based, that is, normalized on the basis of an appropriate measure of production. Limitations and standards for AOX, chloroform, BOD_5, and TSS fall into this category.

This appropriate measure of production is known as the "production-normalizing parameter." The current definition of "production-normalizing parameter" is annual off-the-machine production (including off-the-machine coating, where applicable) of pulp, paper, and/or paperboard, divided by the number of operating days that year. Most paper and paperboard production is measured at the off-the-

machine moisture content, while market pulp is measured as air-dry metric tons (10 percent moisture). EPA is not changing this definition of production as it applies to the effluent limitations and standards for any subcategory in Part 430 other than subparts B and E. EPA is also retaining the existing definition of production for the NSPS for conventional pollutants being promulgated today for subpart B and subpart E. See 40 CFR 430.01(n)(1).

However, EPA is codifying a new definition of production for the AOX and chloroform limitations being promulgated today for subparts B and E. See 40 CFR 430.01(n)(2). Under the new specialized definition, the production-normalizing parameter to be used by permit writers in calculating mass-based limitations for chloroform and AOX is air-dried metric tons of brownstock pulp (10 percent moisture) entering the bleach plant at the stage during which chlorine or chlorine-containing compounds are first applied to the pulp. In the case of bleach plants that use totally chlorine-free bleaching, the production-normalizing parameter used to calculate mass-based limitations shall be air-dried metric tons of brownstock pulp (10 percent moisture) entering the first stage of the bleach plant from which wastewater is discharged. *Id.* Production, in turn, is defined as the annual unbleached pulp production that enters the bleach plant (at ten percent moisture) divided by the number of operating days of the bleach plant. *Id.*

The Agency had proposed to change the current definition of production in part 430 by adding the following statement: "Production in each of the foregoing cases shall be determined for each mill based upon the highest annual production in the past five years divided by the number of operating days that year." See 58 FR at 66189. EPA has decided not to revise the definition to include a new time basis because EPA is not revising the current BPT and BCT effluent limitations guidelines at this time for subparts B and E. Codifying a new time basis for determining production of AOX and chloroform would have required permit writers to apply different time bases for determining production for purposes of calculating BAT limitations and limitations for conventional pollutants. In EPA's view, this would have unduly complicated the permitting process. In addition, for NSPS, introducing a time basis would be illogical because new sources do not have five years of data from which to determine the one highest year.

(2) Determination of Permit Limitations for Multiple Subcategory Mills. For facilities with multiple point source categories, subcategories, and segments, the appropriate guidelines for each category, subcategory (or subpart), and segment are used to determine a single permit limit for each pollutant. Chapter 5 of the U.S. EPA NPDES Permit Writers' Manual (EPA–833–B–96–003, December 1996) provides guidance in determining permit limits in situations when the effluent guidelines for one subcategory regulates a different set of pollutants than the effluent guidelines applicable to another subcategory. For mill subject to today's rule, this situation may arise in setting permit limits for AOX when the mill has production in multiple subcategories.

For pollutants regulated today at the bleach plant (i.e., dioxin, furan, chlorinated phenolic pollutants, and chloroform, and, for subpart B PSES/PSNS, AOX), EPA does not believe that multiple guidelines will be relevant. The bleach plant is unlikely to be used for more than one subcategory (or segment in subpart E), and thus, the permit limit will be determined by the limitations and standards for a single subcategory (or segment).

There may be instances where a pollutant is regulated under the limitations and standards promulgated today and the permitting authority also wishes to establish limits for that particular pollutant have yet to be established. For example, the permitting authority might need to use best professional judgment to determine end-of-pipe limits for AOX for a mill with production not only in subpart B or E (for which AOX limitations are being promulgated today) but also in another subpart (for which no AOX limitations have been promulgated) that generates AOX. In these instances, the permitting authority would use best professional judgment to develop pollutant limits for wastestreams and pollutants not covered by today's rulemaking and apply those limits to determine a proper permit limitation for the mill.

Following promulgation of today's rules, EPA will develop and publish additional guidance for the pulp and paper industry for determining permit limitations for facilities with production in multiple categories, subcategories, and segments.

c. Compliance With Effluent Limitations. (1) Compliance Demonstration for In-Plant Limitations. The effluent limitations and standards that the Agency is promulgating today for dioxin, furan, chloroform, the 12 chlorinated phenolic pollutants and AOX will be applied (depending on the subcategory and segment) to the total discharge from each physical bleach line operated at the mill. At most mills, wastewaters from acid and alkaline bleaching stages are discharged to separate sewers. At some mills, however, bleach plant wastewaters are discharged to a combined sewer containing both acid and alkaline wastewaters.

For dioxin, furan, and chlorinated phenolic compounds, compliance with the effluent limitations and standards can be demonstrated by collecting separate samples of the acid and alkaline discharges and preparing a flow-proportioned composite of these samples, resulting in one sample of bleach plant effluent for analysis. However, in determining the limitations, EPA used data from acid and alkaline bleach plant effluents that had been analyzed separately. (EPA also used data from combined sewers.) In a comment on Method 1653 (DCN 20095 A8), the commenter reported problems in achieving the Minimum Level in Method 1653 for samples of composited acid and alkaline filtrates. If necessary to achieve the Minimum Level, EPA recommends that the facility test the effluents separately for reliable determination of the chlorophenolics, TCDD, and TCDF.

For chloroform, however, separate samples and analyses of all bleach plant filtrates discharged separately are required to prevent the loss of chloroform through air stripping as the samples are collected, measured, and composited or through chemical reaction when the acid and alkaline samples are combined. If separate acid and alkaline sewers do not exist, compliance samples must be collected from the point closest to the bleach plant that is or can be made physically accessible.

(2) Compliance with ML Limitations. In today's rulemaking for the Bleached Papergrade Kraft and Soda subcategory, EPA is establishing limitations and standards for 12 chlorinated phenolic pollutants and dioxin, and alternative TCF limitations and standards for AOX, that are expressed as less than the Minimum Level ("<ML"). See 40 CFR 430.24, 430.25, 430.26, 430.27. For various segments of the Papergrade Sulfite subcategory, EPA is establishing limitations and standards for AOX, chlorinated phenolic pollutants, dioxin, and furan that are also expressed as "<ML." See 40 CFR 430.54, 430.55, 430.56, 430.57. Henceforth, this discussion refers to these limitations and standards as "ML limitations". The "ML" is an abbreviation for the Minimum Level identified today in § 430.01(i) for the analytical methods that EPA used to determine the level of

pollution reduction achievable for these pollutants through the use of BAT, NSPS, PSES and PSNS technologies for these subparts. (Section VI.B.5.a(4) provides a detailed discussion about ML limitations.) EPA intends for mills subject to ML limitations to have pollutant discharges with concentrations less than the Minimum Levels of the analytical methods specified today in § 430.01(i).

Compliance with the ML limitation for an analyte can only be demonstrated by using the method specified in § 430.01(i) for that analyte, or other methods approved in 40 CFR Part 136 that have Minimum Levels equal to or less than the minimum level specified today in § 430.01(i). Mills are not authorized under this rule to demonstrate compliance with an ML limitation codified today by using an analytical method with a minimum level above the Minimum Level specified in § 430.01(i).

The Minimum Level specified for each method is the lowest level at which calibration is performed. See 40 CFR 430.01(i). Laboratories calibrate their equipment by using standards (i.e., samples at several known concentrations of each analyte). Calibration is necessary because laboratory equipment does not measure concentrations directly. Rather, the equipment generates signals or responses from analytical instruments that must be converted to concentration values. The calibration process establishes a relationship between the signals and the known concentration values of the standards. This relationship is then used to convert signals for samples with unknown concentrations.

In the calibration process, one of the standards will have a concentration value at the Minimum Level for each analyte. Because the minimum levels are the lowest levels for which laboratories calibrate their equipment, measurements below the Minimum Level are to be reported as being "less than Minimum Level," or "<ML".

Often, laboratories report values less than minimum levels to be "not detected" or "<ML." In some cases, however, the laboratories report these values as if the values were quantified. For example, if the Minimum Level specified in § 430.01(i) is 10 ppq, the laboratory might report a measurement that is 4 ppq. Such reported values might occur in two situations. In the first situation, the laboratory could have used the method specified in § 430.01(i), but referred to the measurement as "detected" although it was less than the Minimum Level. The second situation could occur in the future as the analytical methods become more sensitive than the methods specified in § 430.01(i). Using such future methods could conceivably allow laboratories to reliably measure values less than today's minimum levels. Such measurements resulting from either situation would be considered to demonstrate compliance with the ML limitations, because these measurements are less than the method ML specified in § 430.01(i).

When monitoring for compliance with this final rule, a sample-specific Minimum Level greater than the method Minimum Level will not demonstrate compliance with an ML limitation. Such sample-specific Minimum Levels may result from sample volume shortages, breakage or other problems in the laboratory, or from failure to properly remove analytical interferences from the sample. EPA believes that all of these situations can be avoided by careful adherence to sample collection and laboratory analysis procedures. For example, in the Agency's long-term variability study, some of the one-liter jars that were sent to laboratories for analysis were not filled to capacity. In this example, adjustments to the Minimum Levels could have been avoided if a sufficient volume of sample had been collected by filling the one-liter jars to capacity, or by using larger or extra jars. Mill personnel should collect sufficient volume to allow for analysis of the entire sample volume specified in the method and for dilutions, re-analyses, or other problems that may occur. In addition, it is often possible for the laboratory to adjust for extraction of smaller sample volumes by further concentrating the resulting extracts prior to analysis.

Table VI–11 provides some examples demonstrating compliance with the ML limitations. In these examples, the method ML specified in § 430.01 is 10 ppq.

TABLE VI–11.—EXAMPLES DEMONSTRATING COMPLIANCE WITH ML LIMITATIONS

Is concentration reported as "detected" or "non-detected" in the sample?	Value reported by laboratory (ML in these examples is 10 ppq)	Does the sample demonstrate compliance?	Explanation for compliance determination
Detected	4 ppq	Yes	4 ppq is less than the ML specified in § 430.01.
Detected	10 ppq	No	Compliance is demonstrated only with measurements less than the ML specified in § 430.01.
Detected	11 ppq	No	The measured value is greater than the ML specified in § 430.01.
Non-detected	<5 ppq	Yes	<5 ppq is less than the ML of 10 ppq specified in § 430.01.
Non-detected	<10 ppq	Yes	Compliance is demonstrated for all values less than the ML specified in § 430.01.
Non-detected	<11 ppq	No	The sample-specific ML must be less than the ML of 10 ppq specified in § 430.01.

(3) AOX at Calcium-, Magnesium-, or Sodium-Based Sulfite Mills. The AOX limitation for calcium-, magnesium-, or sodium-based papergrade sulfite mills is expressed as less than the Minimum Level (ML) of the analytical method. As discussed in section VI.B.6, this AOX limitation is based on transfer of data collected at the bleach plant effluent to the end-of-pipe for BAT. EPA received comments asserting that this transfer of data does not account for potential sources of AOX other than the bleach plant. Examples of these potential sources of AOX include the release of AOX from purchased pulp used in papermaking, the use of chlorinated compounds for control of biological growth on paper machines, chlorine use in water treatment, and bleaching colored broke in the stock preparation area. Hypochlorite is also used in deinking processes to strip color from post-consumer waste.

AOX contributions from deinking operations are not covered by this rule and would be addressed in developing appropriate permit limitations as described in VI.B.8.b(2) above. AOX contributions due to chlorine use in treating process water supplies are not taken into account in the development of limitations and standards for the calcium-, magnesium-, or sodium-based

sulfite pulp segment. In cases where other sources of AOX, such as paper machines, make the end-of-pipe AOX limitations in this rule impractical or infeasible for the purpose of assessing the contribution of AOX from bleach plant sources, the AOX limitation may be imposed on internal waste streams (i.e., bleach plant effluent) before mixing with other waste streams containing AOX. See 40 CFR 122.45(h).

(4) Minimum Monitoring Frequencies. (a) Rationale for Establishing Minimum Monitoring Frequencies. EPA proposed specific minimum monitoring frequencies for pollutants in bleach plant and end-of-pipe effluent discharges. See 58 FR at 66189. Although EPA proposed minimum monitoring requirements for BOD_5 and TSS limitations established as part of NSPS, EPA is not specifying such requirements in the final rule because permit authorities have ample experience regulating these pollutants and can determine the appropriate monitoring frequencies. See Section VI.A.3 for a discussion of BOD_5 monitoring requirements under today's air rule. See also Section VI.B.7 for a discussion of monitoring requirements associated with BMPs.

The final rule specifies minimum monitoring frequencies for AOX, dioxin, furan, chloroform, and chlorinated phenolic pollutants for non-TCF mills because of the nature and composition of the discharges from non-TCF bleached papergrade kraft and soda and papergrade sulfite mills. See 40 CFR 430.02 (a) and (b). Wastewaters from these mills have been found to contain chlorinated organic compounds that are highly toxic and bioaccumulative (e.g., dioxin, furan, and chlorinated phenolic pollutants). Process-related variability in generating these pollutants is clearly reflected in available data. Therefore, given the environmental significance of these pollutants, minimum monitoring is both necessary and appropriate to ensure that data are available to permitting authorities to have an adequate basis to verify compliance with the technology-based effluent limitations and standards. In contrast to discharges of BOD_5 and TSS, receiving water effects from discharges of these chlorinated pollutants are not as easily detected, are not as well understood, and do not manifest themselves in a manner that enables a mill to quickly become aware of and react to releases that may be harmful to the environment.

The monitoring requirements imposed in 40 CFR 430.02 will not take effect until EPA has obtained approval of these information collection requirements from the Office of Management and Budget (OMB) under the Paperwork Reduction Act, 44 U.S.C. 3501, *et seq.* For monitoring requirements applicable to direct dischargers, EPA will seek to amend the NPDES Discharge Monitoring Report ICR No. 229, OMB approval number 2040–0004, prior to its expiration on May 31, 1998. For indirect dischargers, EPA will seek to add specified monitoring requirements for indirect dischargers to the National Pretreatment Program ICR No. 2, OMB approval number 2040–0009, when it expires on October 31, 1999. EPA will not seek to amend this ICR prior to its expiration date because the monitoring requirements for indirect dischargers do not become effective until April 16, 2001 for existing indirect dischargers, and EPA anticipates no new indirect dischargers commencing discharge prior to the ICR expiration date.

(b) Duration of Minimum Monitoring Frequency. The final rule includes minimum monitoring frequency requirements for demonstrating compliance with limitations and standards for dioxin, furan, chloroform, the 12 chlorinated phenolic pollutants, and AOX for non-TCF mills. See 40 CFR 430.02(a). Permitting and pretreatment authorities retain authority to specify more frequent monitoring on a case-by-case basis and must specify AOX monitoring frequency for TCF mills on a best professional judgment basis. The minimum monitoring frequencies are applicable to mills in Subparts B and E for a duration of five years after inclusion in NPDES permits for direct dischargers. See 40 CFR 430.02(b). For existing indirect dischargers, the minimum monitoring requirements apply until April 17, 2006 which reflects a five-year monitoring period following the termination of the three-year compliance period authorized by CWA Section 307(b)(1). *Id.* For new indirect dischargers, the five year minimum monitoring period commences upon operation. *Id.*

EPA has determined the minimum monitoring frequencies established by this rule are necessary to demonstrate compliance with the effluent limitations guidelines and standards promulgated today, particularly considering the degree of change that is expected to occur to pulping and bleaching processes as this rule is implemented. In establishing the minimum monitoring frequencies for the regulated pollutants, the Agency has struck a balance between the cost of the monitoring regimen and the need to ensure that sufficient data are consistently available to permitting authorities to provide an adequate basis to verify compliance with the effluent limitations and standards and to mills to quickly become aware of and react to releases that may be harmful to the environment.

The Agency has selected a minimum monitoring frequency of once per month for dioxin, furan, and chlorinated phenolic pollutants. See 40 CFR 430.02(a). These pollutants are the most toxic and bioaccumulative among those regulated yet also are the most costly to analyze (total cost of approximately $1,325 per sample; $825 per sample for dioxin, furan, and $500 per sample for all 12 chlorinated phenolic analytes). EPA expects that 12 data points for each pollutant per year, together with daily end-of-pipe AOX data and information on process conditions from detailed mill logs (e.g., unbleached pulp kappa numbers, bleach plant kappa factors, bleached pulp brightness, etc.) that are reviewable upon request, will yield a meaningful basis for establishing compliance with the promulgated limitations through long-term trends and short-term variability in dioxin, furan, and chlorinated phenolic pollutant discharge loading patterns.

The Agency has selected a minimum monitoring frequency of once per week for chloroform. See 40 CFR 430.02(a). This minimum monitoring frequency has been selected because data available indicate there can be considerable temporal variability of this pollutant in bleach plant wastewaters. Therefore, more data are required to adequately assess compliance with the promulgated limitations and standards on both a long-term and short-term basis. While the cost for laboratory analysis of chloroform (approximately $270 per sample) is much lower than for dioxin, furan, and chlorinated phenolic pollutants, chloroform sampling requirements are more extensive and rigorous (e.g., sampling of all bleach plant filtrates using special equipment and containers to prevent volatilization). Weekly data (52 data points) and information on process conditions from detailed mill logs that are reviewable upon request are expected to yield an adequate basis for establishing long-term compliance trends in chloroform discharge loadings and developing process control strategies to ensure the short-term compliance in chloroform discharge loadings.

The Agency has selected a minimum monitoring frequency of once every day for AOX for non-TCF mills. See 40 CFR 430.02(a). This minimum monitoring frequency has been selected because there can be considerable daily variability in chlorinated organic discharge loadings to receiving streams

reflecting both bleach plant discharge patterns and secondary biological treatment system performance that is readily measured at reasonable cost. At this time, AOX analysis costs $120 per sample. This cost is likely to decrease after this regulation is promulgated with increased capacity at commercial laboratories and analytical laboratories on-site at many mills. While this bulk parameter measures all chlorinated organic constituents in wastewater and not individual pollutants, daily monitoring will provide an essentially continuous data stream on a quick turnaround basis to mill operating personnel and permit compliance authorities to assess and control process technologies and manage the performance of end-of-pipe biological treatment systems.

The minimum monitoring frequencies in this rule as described above will provide sufficient information to evaluate mill compliance with the promulgated limitations over the long term and allow permitting and pretreatment authorities to judge whether a different frequency of monitoring is warranted after the initial compulsory period of minimum monitoring has been completed. These data will prove useful to permitting authorities and also to mill operators in developing a robust mill-specific compliance data base with which to analyze the effects of mill processes on effluent trends. The five-year duration of the minimum monitoring requirements is consistent with permit issuance cycles, will ease administrative burdens on operators and permitting authorities, and will provide data useful for establishing appropriate monitoring requirements during future permit renewals.

Following completion of the compulsory five-year monitoring period set forth by this rule, the permitting or pretreatment authority has discretion to adjust monitoring requirements as deemed appropriate on a case-by-case basis. For those mills consistently demonstrating reductions superior to those required merely to comply with their permit requirements, EPA believes that it may be appropriate to allow less frequent monitoring to reduce the regulatory burden. EPA expects the permitting or pretreatment authority also to consider the mill's compliance and enforcement history in determining monitoring frequencies. This avenue for relief provides incentives for voluntary reductions of pollutant discharges through such means as reuse and recycling. EPA also expects permitting and pretreatment authorities to consider whether poor performance, compliance or enforcement history, or other site-specific factors indicate a need to impose more frequent monitoring than that specified in this rule.

EPA has issued interim guidance for performance-based reductions of NPDES permit monitoring frequencies, which may be useful for permit writers and pretreatment authorities in determining alternative monitoring frequencies at the close of the compulsory five-year period imposed by this rule. (See Interim Guidance for Performance-Based Reductions of NPDES Permit Monitoring Frequencies, April 1996, EPA–833–B–96–001). This document provides guidance to permit writers on implementing EPA's NPDES regulations regarding appropriate monitoring in permits and describes the conditions under which reduced monitoring would be justified. Pretreatment control authorities also may find this guidance useful in setting monitoring frequencies for industrial users of POTWs. The current guidance applicable to all industrial point sources is dated April 19, 1996, and is subject to revision.

(c) Certification for TCF Bleaching. Mills certifying in their permit application process that all bleaching processes are totally chlorine-free are exempted from the minimum monitoring frequencies established in this rule, provided that analytical data routinely submitted as part of the permit application confirm the absence of chlorinated compounds. See 40 CFR 430.02. EPA believes it is appropriate to exclude TCF mills from the minimum monitoring frequencies for chlorinated compounds since any process change that introduces chlorinated compounds to the bleaching process requires notification to the permitting authority and would result in reopening the permit for modification. See, e.g., 40 CFR 122.21(g)(3), 122.21(g)(7), and 122.41(l).

(d) ECF Certification in Lieu of Monitoring. In response to comments, EPA has considered whether certification of ECF bleaching processes can be used in lieu of monitoring. Because of the effect that operation and control of pulping and bleach plant processes have on generation of chlorinated pollutants, EPA has determined that the information available at this time does not demonstrate that ECF certification alone is sufficient to ensure compliance with the regulations promulgated today. Therefore, this rule does not allow certification of ECF bleaching to replace monitoring. (See DCN 14497, Vol. I, and section VI.B.5 of this preamble for a discussion of factors affecting chlorinated pollutant generation.)

Elsewhere in today's **Federal Register**, however, EPA is proposing to allow mills to demonstrate compliance with chloroform limitations by certifying that they use ECF bleaching processes and that these processes are operated in a manner consistent with certain process and related factors. In this notice, EPA also is seeking additional chloroform data, along with corresponding process data, to determine whether an ECF certification process for chloroform should require certification of certain process factors; for example, factors relating to residual lignin content, chemical application rates, and other process variables.

d. Intake Credits, Upsets, and Bypasses. An intake credit is an adjustment made to an effluent limitation to reflect the presence of a pollutant in the discharger's intake water beyond what is removed by an installed technology that would otherwise meet the technology-based effluent limitation or standard. EPA's regulations concerning intake credits are set forth at 40 CFR 122.45 and 40 CFR 403.15.

A "bypass" is an intentional diversion of waste streams from any portion of a treatment facility. An "upset" is an exceptional incident in which there is unintentional non-compliance with technology-based permit effluent limitations because of factors beyond the reasonable control of the permittee. EPA's regulations concerning bypasses and upsets are set forth at 40 CFR 122.41 (m) and (n).

e. Variances and Modifications to Permits. (1) Variances. Dischargers subject to the BAT and PSES limitations promulgated in these final regulations may apply for a Fundamentally Different Factors (FDF) variance under the provisions of section 301(n) of the CWA. The FDF variance considers those facility-specific factors that a permittee believes to be uniquely different from the factors considered by EPA in developing an effluent guideline to determine whether the effluent guidelines limitations should be inapplicable to the permittee's facility. An FDF variance is based only on information submitted to EPA during the rulemaking establishing the effluent limitations, or on information the applicant did not have a reasonable opportunity to submit during the rulemaking process. See CWA section 301(n)(1)(B). If fundamentally different factors are determined to exist, the alternative effluent limitations for the petitioner must be no less stringent than those justified by the fundamental difference. See CWA section 301(n)(1)(C). The alternative effluent

limitation must not result in non-water quality environmental impacts significantly greater than those accepted by EPA in promulgating the effluent limitations guidelines or pretreatment standards. See CWA section 301(n)(1)(D). FDF variance requests, along with all supporting information and data, must be received by the permitting authority within 180 days after publication of the final effluent limitations guideline or standard. See CWA section 301(n)(a). The specific regulations covering FDF variance requirements and administration are found at 40 CFR 122.21(m)(1), 40 CFR Part 125, Subpart D, and 40 CFR 403.13.

Dischargers may also apply for a variance from the BAT limitations on non-conventional pollutants in these final regulations under CWA section 301(c) (for economic reasons) and 301(g) (for water quality reasons). Regulations for the administration of these variances are specified in 40 CFR 122.21(m)(2).

New sources subject to NSPS or PSNS are not eligible for variances. See *E.I. DuPont* v. *Train,* 430 U.S. 112 (1977).

(2) Permit Modifications. It may be necessary to modify a permit at some point after it has been issued. In a permit modification, only the conditions subject to change are reconsidered. All other permit conditions remain in effect unchanged. A permit modification may be triggered in several ways, such as when the regulatory agency inspects the facility and finds a need for the modification, or when information submitted by the permittee suggests a need for a modification. Any interested person may request that a permit modification be made. There are two classifications of modifications: major and minor. From a procedural standpoint, they differ primarily with respect to the public notice requirements. Major modifications require public notice while minor modifications do not. See 40 CFR 122.63. Virtually all modifications that result in less stringent conditions are treated as a major modification, with provisions for public notice and comment. Conditions that would necessitate a major modification of a permit are described in 40 CFR 122.62. Minor modifications are generally non-substantive changes. The conditions for minor modification are described in 40 CFR 122.63.

VII. Environmental Impacts

This section of the preamble describes the environmental impacts of the air and water regulations being promulgated today, and the environmental impacts of the MACT II regulations being proposed today. These impacts are described in terms of reductions in air pollution emissions expected as a result of the final MACT I and proposed MACT II rules, as well as the reduction in water pollution (effluent) discharges expected as a result of today's effluent limitations guidelines and standards for Subparts B and E. (In this section, all references to MACT I include MACT III unless expressly noted.) The emissions and effluent reductions described in this section generate the quantified and monetized benefits described in Section VIII of this preamble. This section also discusses the non-water quality environmental impacts of the effluent limitations guidelines and standards promulgated today, including air emissions, energy requirements, solid waste generation, water use, and wood consumption. Sections II.B.2 and VII.A describe air and water pollution control technologies for each subcategory regulated today: Kraft, Soda, Sulfite, and Semi-chemical mills that are subject to MACT I and MACT III standards; and bleached papergrade kraft and soda and papergrade sulfite mills that are subject to effluent limitations guidelines and standards. EPA estimates that the application of these technologies by the 155 mills regulated by today's air rules, including 96 of those mills also regulated by today's water rules, will substantially reduce air emissions and water pollution discharges, as described in Section VII.B.

A. Summary of Sources and Level of Control

Table VII–1 shows a summary of sources and technology bases/level of control for the final BAT/PSES effluent limitations guidelines and standards, and the final MACT I standards. The summary of sources and level of control for MACT II are discussed in the preamble for the proposed MACT standards elsewhere in today's **Federal Register**.

TABLE VII–1.—FINAL CLUSTER RULES—SOURCES AND TECHNOLOGY BASES/LEVEL OF CONTROL

Toxic and nonconventional pollutant effluent control (BAT, PSES, and BMP technology bases) by subcategory					Hazardous air pollutant emission control (MACT I and III levels of control) by subcategory			
Bleached papergrade kraft and soda	Papergrade sulfite			Best Management Practices (BMP), (Subparts B and E)	Kraft	Soda and semi-chemical	Sulfite	Secondary and nonwood fiber, and mechanical wood fiber
	Calcium, magnesium, and sodium sulfite	Ammonium sulfite	Specialty grade					
Selected BAT/PSES				Spent Pulping Liquor Spill Prevention and Control.	Control LVHC System Vents			See Bleach Plant Block Below
ECF: 100% Substitution of Chlorine with Chlorine Dioxide; effective brownstock washing; elimination of hypochlorite; oxygen-and peroxide-enhanced extraction; closed brown-stock screening; and other processes discussed at Section VI.B.5.a(1).	TCF: Oxygen- and peroxide-enhanced extraction; peroxide bleaching; elimination of all chlorine-containing compounds; and improved pulp cleaning.	ECF: 100% Substitution of Chlorine with Chlorine Dioxide; peroxide-enhanced extraction; elimination of hypochlorite; and use of dioxin-and furan-precursor-free defoamers.	ECF: 100% Substitution of Chlorine with Chlorine Dioxide; oxygen- and peroxide-enhanced extraction; elimination of hypochlorite; and use of dioxin and furan precursor-free defoamers.	.....	Control Selected HVLC Vents and Named High HAP Concentrated Condensate Streams.	Control Pulp Washing System Vents at New Sources.	Control Pulp Washing System Vents, and Control Liquor and Acid Tank Vents at New Sources.	
					Bleach Plant: Control Chlorinated HAP from Vents at Stages That Use Chlorinated Bleaching Chemicals, and Control Chloroform Emissions by Complying with BAT codified at 40 CFR 430.24(a) and (e) and 40 CFR 430.54(a) and (c) or by 100% substitution of chlorine with chlorine dioxide and elimination of hypochlorite.			

B. Air Emissions and Water Effluent Reductions

1. Air Emissions Reductions

The reductions described in this section are derived from estimated air emissions reductions at all 155 pulp and paper mills in the CAA kraft, soda, sulfite and semichemical subcategories that are subject to MACT I and MACT II standards. These mills include the 96 mills subject to the effluent limitations guidelines and standards promulgated today. All references in this section to MACT I air emissions refer to the expected effects of implementing both the air and water portion of the final Cluster Rules.

Implementation of the MACT portion of the Cluster Rules is expected to significantly decrease HAP emissions. Table VII–2 presents the environmental impacts of the Final Cluster Rules (BAT, PSES, BMPs, and MACT I) and the Final Cluster Rules in combination with the MACT II proposed standards.

The air emission impacts presented in Table VII–2 are calculated based on mill-specific processes and emission control information, emission factors, and control levels summarized in Table VII–1. A more detailed discussion of the calculation of the environmental impacts for the final MACT standards is presented in Chapter 20 of the Background Information Document described in Section XI of this preamble. A detailed discussion of the environmental impacts of the proposed MACT II is contained in the docket for the proposed MACT II standard. As shown in Table VII–2, these final Cluster Rules not only reduce HAP emissions from all CAA and CWA subcategories regulated, but they also result in decreases of volatile organic compounds and total reduced sulfur using industry data updated to 1996. Emissions of particulate and carbon monoxide are estimated to increase under the final rules, but are expected to decrease when combined with the proposed MACT II standards. Emissions of sulfur dioxides, and, to a lesser degree, nitrogen oxides are estimated to increase. Sulfur dioxide emissions are generated primarily from the combustion of sulfur-containing compounds, such as TRS, in the vent streams at kraft mills. The increases in carbon monoxide, nitrogen oxide, and particulate matter air emissions are primarily from the combustion of air vents in the pulping area and increased energy to produce additional steam for steam strippers and chlorine dioxide for the bleaching system. However, these emission increase estimates are likely overstated because they do not account for the fact that some mills in sensitive areas for sulfur dioxide already have sulfur dioxide controls in place or may choose alternative controls available in the final MACT rule that mitigate these

increases. The health effects and benefits of these emission reductions and increases are discussed in Section VIII.G.1 of this notice.

TABLE VII–2.—AIR EMISSION IMPACTS OF PULP AND PAPER RULES (ALL CAA SUBCATEGORIES)

Air pollutants	Baseline air emissions (Mg/year)	Air emission reductions (Mg/year)	
		Final cluster rules	Final cluster rules and proposed MACT II
Hazardous Air Pollutants	240,000	139,000	142,000
Volatile Organic Compounds	900,000	409,000	440,000
Total Reduced Sulfur	150,000	79,000	79,000
Particulate	[a]NA	[b](83)	24,000
Carbon Monoxide	NA	(8,700)	49,000
Nitrogen Oxides	NA	(5,200)	(5,700)
Sulfur Dioxides	NA	(94,500)	(94,400)

[a] Industry process data was not collected to calculate emissions for these pollutants increases and decreases for these pollutants reflected in columns to the right are increases or decreases of these pollutants caused by projected installation of MACT control equipment and secondary air emission impacts of BAT, PSES, and BMPs.
[b] Values in ( ) are estimated emission increases over baseline air emissions.

2. Water Pollutant Reductions

Table VII–3 shows the estimated baseline (as of mid-1995) and the reductions from baseline expected from the BMP requirements being promulgated today for the Bleached Papergrade Kraft and Soda and Papergrade Sulfite subcategories. (Hereafter, references to BAT/PSES impacts include impacts associated with today's BMP requirements.) Calculation of these pollutant reductions is discussed in Sections VI.B.5.a(3) and VI.B.6.b(5). For a discussion of the estimated effluent reduction benefits associated with the BAT limitations promulgated for the Voluntary Advanced Technology Incentives Program for the Bleached Papergrade Kraft and Soda subcategory, see Section IX. A.6 and Table IX–1.

TABLE VII–3.—ESTIMATED POLLUTANT REDUCTIONS FROM BASELINE FOR BAT/PSES

Pollutant parameter	Units	Baseline discharge for BPK mills	Estimated reductions: Final BAT/PSES for BPK mills	Baseline discharge for PS mills	Estimated reductions: Final BAT/PSES for PS mills
2,3,7,8-TCDD	g/yr	15	11	0.78	0.65
2,3,7,8-TCDF	g/yr	115	107	6.7	6.4
Chloroform	kkg/yr	48	40	5.4	5.2
Chlorinated Phenolics	kkg/yr	55	45	2.0	1.8
AOX	kkg/yr	36,300	24,200	4,380	4,010

BPK—Bleached Papergrade Kraft and Soda subcategory.
PS—Papergrade Sulfite subcategory.
g—grams.
kkg—metric ton (1,000 kilograms or 1 megagram (Mg)).

The air quality impacts shown in Table VII–2 and the water pollutant effluent reductions shown above are used in the following section to estimate reduced human health and environmental risk attributable to today's rules. These estimates also form the basis for estimating monetized benefits in the following section.

C. Non-Water Quality Environmental Impacts of Effluent Limitations Guidelines and Standards (BAT, PSES, and BMPs)

Sections 304(b)(2)(B) and 306(b)(1)(B) of the Clean Water Act require EPA to consider the non-water quality environmental impacts of effluent limitations guidelines and standards. To address these statutory requirements, EPA analyzed the air emissions, energy requirements, solid waste generation impacts, and other environmental impacts of the compulsory BAT, PSES, and BMPs being promulgated today for the Bleached Papergrade Kraft and Soda and Papergrade Sulfite subcategories. The results of this analysis are presented below. In performing the analysis, EPA assumed that each mill in the regulated subcategory would install the model technologies upon which today's limitations and standards are based.

1. Air Emissions

The air emissions reductions of BAT, PSES, BMPs, and MACT I, in combination, are presented in Section VII.B.1 above. This section presents the estimated air emission impacts of BAT, PSES, and BMPs on the 86 mills with production in the Bleached Papergrade Kraft and Soda subcategory and the 11 mills with production in the Papergrade Sulfite subcategory. (One mill has co-located operations in both subcategories that separately contribute to the number of mills in each subcategory.)

The control technologies that form the basis of effluent guidelines and standards promulgated today involve changes in the processes used to produce bleached pulp. These changes affect the rate at which air pollutants, including HAPs, are emitted from the pulping and bleaching processes that are subsequently controlled by MACT I. As shown in Table VII–4, the process changes at bleached papergrade kraft

and soda and papergrade sulfite facilities subject to BAT, PSES, and BMPs decrease the emissions of some HAPs but have little impact on others. For example, the elimination of chlorine and hypochlorite from bleaching processes, part of the basis for BAT and PSES, will reduce the emission of chloroform in the Bleached Papergrade Kraft and Soda subcategory by 66 percent [but will have a much smaller impact on the emission of methanol.] The application of the BAT, PSES, and BMPs promulgated today for the Bleached Papergrade Kraft and Soda subcategory will reduce the emission of total HAPs from the sources controlled by MACT I from 149,000 Mg/year to 139,000 Mg/yr (7 percent reduction) without taking into account further reductions achieved by MACT I controls.

TABLE VII–4.—IMPACT OF BAT, PSES, AND BMP: BLEACHED PAPERGRADE KRAFT AND SODA AND PAPERGRADE SULFITE MILLS AIR EMISSIONS FROM SOURCES SUBJECT TO CONTROL BY MACT I

Air pollutants	Bleached papergrade kraft and soda [Mg/year]		Papergrade sulfite (all segments) [Mg/year]	
	Baseline emissions	Emission reductions from BAT/PSES/BMPs	Baseline emissions	Emission reductions from BAT/PSES/BMPs
Total Hazardous Air Pollutants	149,000	10,000	5,190	1,930
Chloroform	9,510	6,060	13	8
Volatile Organic Compounds	569,000	11,000	6,020	2,270
Total Reduced Sulfur	100,000	1,300	0	0

The process changes that form the basis of BAT, PSES, and BMP's increase by approximately 1.5 percent the amount of spent pulping liquor combusted by bleached papergrade kraft mills and papergrade sulfite mills. See the Supplemental Technical Development Document, DCN 14487. HAPs and criteria air pollutants (volatile organic compounds, particulate matter, carbon monoxide, nitrogen oxides, and sulfur dioxides) are generated from combustion of spent pulping liquor by bleached papergrade kraft and sulfite mills. As a result, as shown in Tables VII–5a and VII–5b, the emission of total HAPs from spent pulping liquor combustion sources (i.e., recovery boilers) will increase by 1.1 percent at bleached papergrade kraft and soda facilities and 1.9 percent at papergrade sulfite facilities above the 1995 baseline. However, the net increase in HAP emissions from these combustion sources (235 Mg/yr) represents 1.1 percent of the HAP emissions from all sources subject to control by MACT I, II, and III. Although BAT, PSES, and BMPs result in a small increase in HAP emissions from recovery boilers, the combined effect of the Cluster Rules (including proposed MACT II) is a net decrease of 60 percent in total HAP emissions from all controlled sources. See Table VII–2.

TABLE VII–5A.—IMPACT OF BAT, PSES, AND BMP: BLEACHED PAPERGRADE KRAFT AND SODA AIR EMISSIONS FROM RECOVERY BOILERS AT BLEACHED PAPERGRADE KRAFT AND SODA MILLS SUBJECT TO PROPOSED MACT II [MG/YEAR]

	1995 baseline emission	Emission increases from BAT/PSES/BMPs	MACT II emission reductions	Net change after MACT II[a]
Hazardous Air Pollutants	19,900	220	25	195
Volatile Organic Compounds	19,500	213	0	213
Total Reduced Sulfur	2,650	27	0	27
Particulate Matter	31,400	360	12,900	(12,540)
Carbon Monoxide	124,000	1,440	0	1,440
Nitrogen Oxides	36,100	423	0	423
Sulfur Dioxides	67,800	784	0	784

[a] Parentheses indicate emissions decreases below baseline.

TABLE VII–5B.—IMPACT OF BAT, PSES, AND BMP: AIR EMISSIONS FROM RECOVERY BOILERS AT PAPERGRADE SULFITE MILLS SUBJECT TO PROPOSED MACT II [MG/YEAR]

	1995 baseline emission	Emission increases from BAT/PSES/BMPs	MACT II emission reductions	Net change after MACT II
Hazardous Air Pollutants	2,110	40	N/S	40

N/S—Not Significant.

Increases in the emission of criteria pollutants are also listed in Table VII–5a. The emission of total criteria air pollutants from spent pulping liquor combustion sources (i.e., recovery boilers) at mills in the Bleached Papergrade Kraft and Soda subcategory will increase by 1.2 percent as a result of BAT, PSES, and BMPs and will be only slightly mitigated by MACT II controls. The increases in nitrogen oxides (423 Mg/yr), sulfur dioxides (784 Mg/yr), and carbon monoxide (1440 Mg/yr) emissions are minor relative to nationwide emissions, which are 19.8 million Mg/yr for nitrogen oxides, 16.6 million Mg/yr for sulfur dioxides, and 83.6 million Mg/yr for carbon monoxide (OAQPS, 1995).

EPA concludes that the technologies that form the basis of BAT, PSES, and BMPs for bleached papergrade kraft and soda and papergrade sulfite mills pose no significant adverse impacts to and indeed have some benefits for air quality. EPA bases this determination on the following:

—Total HAP emissions from the sources subject to control by MACT I and proposed MACT II from kraft and sulfite pulping and bleaching processes decrease as a result of BAT, PSES, and BMPs;

—HAP emissions would increase by less than one percent from bleached kraft combustion sources and increase by less than two percent from papergrade sulfite combustion sources; and

—The increase in criteria air pollutants for the Bleached Papergrade Kraft and Soda and Papergrade Sulfite subcategories is minor relative to current national industrial emissions.

EPA examined the effect of BAT combined with BMPs on the generation of CO_2 by considering the overall mill carbon balance and the energy balance. Anthropogenic generation of water vapor is minuscule relative to atmospheric recycling and is normally ignored in greenhouse gas analysis. Therefore, water vapor is ignored here. EPA concluded that neither option would have an impact on the total emission of greenhouse gasses from mills due to pulping processing. There, EPA concludes that the increased CO_2 emissions attributable to BAT pose no significant adverse non-water quality environmental impact.

2. Energy Impacts

The impacts of BAT, PSES, and BMPs on the energy use of the 86 mills with production in the Bleached Papergrade Kraft and Soda subcategory and the 11 mills with production in the Papergrade Sulfite subcategory are summarized in Table VII–6. The process changes that form the basis of the regulations promulgated today are estimated to result in an increased energy requirement of 3.70 trillion Btu/yr in oil equivalent at the 96 affected pulp and paper mills. This represents a 0.82 percent increase from the current total Bleached Papergrade Kraft and Soda subcategories energy consumption (papergrade sulfite total energy consumption is minor relative to bleached papergrade kraft) of 499.4 trillion Btu/yr in oil equivalent (DCN 14510). The increased energy use is due to the increased off-site chemical manufacturing electrical demand (met by off-site electric generating stations) and on-site electrical demand (also met by off-site electric generating stations, and commonly referred to as "purchased energy"). These increased demands are partially offset by the decreased steam demand (met by on-site power boilers and recovery furnaces). Oil equivalent is used to express the combined effects of changes in thermal energy and electric power. It is based on the assumption that marginal changes in electric power demand caused by the regulation will be supplied by conventional condensing-type oil-fired power stations. See DCN 14487.

TABLE VII–6.—ENERGY IMPACTS OF BAT, PSES, AND BMP: BLEACHED PAPERGRADE KRAFT AND SODA AND PAPERGRADE SULFITE MILLS

Energy impacts	Units	Bleached papergrade Kraft	Papergrade sulfite (all segments)	Combined total
On-Site Electricity Demand*	Trillion Btu/yr in oil equivalent	(2.37)	(0.0381)	(2.41)
Off-Site Electricity Demand*	Trillion Btu/yr in oil equivalent	10.0	(1.05)	8.95
Steam Demand	Trillion Btu/yr in oil equivalent	(2.88)	(0.010)	(2.89)
Total Energy Demand**	Trillion Btu/yr in oil equivalent	4.78	(1.08)	3.70
Total Energy Equivalent	Number of Households***	46,100	(10,400)	35,700

Parentheses indicate energy savings.
* Assumes an overall electrical generating efficiency of 25 percent. (DCN 14797).
* * Totals do not equal the sum of each line item due to rounding. Refer to Section 11 of the Supplemental Technical Development Document which presents detailed energy estimates.
* * * Assumes 103.6 million Btu/household/yr (Energy Information Administration (DOE) 1993).

The manufacture of sodium chlorate, the raw material used at pulp mills to manufacture chlorine dioxide, requires much more electrical energy than the manufacture of chlorine or other commonly used bleaching chemicals. As a result, off-site electrical demand increases by 8.95 trillion Btu/yr (2.61 million MWhr/yr) because of the effluent limitations guidelines and standards promulgated today. EPA estimates of changes in energy demand as mills install advanced technologies can be found in DCN 14488.

The total increase in energy demand resulting from this rule is equivalent to the energy required for 35,700 households. Compared to the most recent data for total national energy consumption, the rule represents a 0.004 percent increase in energy demand. EPA concludes that the technologies that form the basis of BAT, PSES, and BMPs for bleached papergrade kraft and soda and papergrade sulfite mills do not pose significant adverse impacts in nation-wide energy demand.

3. Incidental BOD_5 Removal and Sludge

The process changes that form the basis for BAT, PSES, and BMP increase by approximately 1.5 percent the amount of spent pulping liquor collected and combusted by bleached papergrade kraft and soda mills. Spent pulping liquor is a significant source of BOD_5 loadings at these mills. The collection and combustion of this spent pulping liquor results in an approximately 20 percent decrease in BOD_5 load into treatment. (EPA expects that papergrade sulfite mills will have similar trends, but lacks data to calculate residuals.)

Sludge is generated as a byproduct of the wastewater treatment systems used at pulp and paper mills. Primary sludge

(i.e., solids removed during physical wastewater treatment processes such as sedimentation prior to biological treatment) is high in wood fiber and volatile solids. Secondary sludge is the product of biological treatment in which microorganisms consume organic matter (BOD_5) in the wastewater. Secondary sludge is a gelatinous mixture of bacterial and fungal organisms. Because of the reduction in BOD_5 load into treatment, the combined application of BAT limitations, PSES, and BMPs promulgated today will decrease sludge generation by 35,900 kkg/yr (39,600 short tons/yr), which represents a 2 percent reduction from the mid-1995 baseline for subpart B and E mills.

Sludge generated at bleached papergrade kraft and soda and papergrade sulfite mills may contain dioxin and furan if these pollutants contaminate the wastewater treated at these mills. At proposal, the Agency estimated that the mills in these two subcategories generated 177 g/yr TEQ dioxin and furan in their wastewater treatment sludge. Since the proposal, industry has significantly reduced the level of dioxin and furan in its wastewater. The Agency estimates that the dioxin and furan content of the sludge has decreased similarly, to approximately 50 g/yr TEQ. See the Supplemental Technical Development Document, DCN 14487.

The process changes that form the basis of the BAT limitations and PSES promulgated today limit the concentration of dioxin and furan allowed to be discharged to the wastewater treatment system. As a result, the Agency estimates that when fully implemented, the combined application of BAT limitations and PSES will reduce the present sludge loading of dioxin and furan TEQ by 43 g/yr, approximately an 85 percent reduction from current levels. The period of time before individual mills have reached this level will vary somewhat depending on the compliance schedule incorporated in the permit and the type of treatment system in place at each mill. See the Supplemental Technical Development Document, DCN 14487.

EPA concludes that the technologies that form the basis of BAT, PSES, and BMPs for the Bleached Papergrade Kraft and Soda and Papergrade Sulfite subcategories are beneficial from the standpoint of solid waste generation. The technologies both reduce the quantity of solid waste generated and also improve its quality by reducing the pollutant loading in the sludge generated.

4. Other Environmental Impacts

Wood consumption at the bleached papergrade kraft and soda mills will be reduced by up to 0.3 percent by the final BAT limitations and PSES promulgated today. The wood savings results from a reduction in losses of useful fiber associated with the recovery of liquor spills and improvements in brownstock washing and screening of pulp. EPA estimates no change in wood consumption at mills in the Papergrade Sulfite subcategory.

The control technologies that form the basis of the effluent limitations guidelines and standards promulgated today will reduce bleached papergrade kraft and soda mill effluent wastewater flows. The greatest reductions would be realized in mills presently discharging the highest flows. In 1995, the average bleached kraft mill discharged approximately 95 m^3/metric ton effluent (23,000 gallons/metric ton). For a 1,000 metric ton/day mill, the average effluent flow is similar to that from a city of 250,000 people. The effluent limitations guidelines and standards will reduce total effluent flow in two ways: (1) Closure of brownstock screening systems, and (2) BMPs. At a mill with open screening, closure could reduce total effluent flow by 25 percent. BMP implementation could result in further effluent flow decreases of two percent. EPA estimates a small reduction in wastewater effluent flow from mills in the Papergrade Sulfite subcategory.

EPA concludes that the technologies that form the basis of BAT, PSES, and BMPs for the Bleached Papergrade Kraft and Soda and Papergrade Sulfite subcategories are beneficial from the standpoint of wood use and wastewater generation, and will not produce significant adverse non-water quality environmental impacts.

D. Non-Water Quality Environmental Impacts of New Source Performance Standards and Pretreatment Standards for New Source (NSPS and PSNS)

EPA analyzed the projected non-water quality environmental impacts of BAT for the Bleached Papergrade Kraft and Soda subcategory for BAT, PSES, and BMPs based on complete substitution of chlorine dioxide for chlorine and other technology elements. This section presents the non-water quality environmental impacts of a second technology configuration (NSPS and PSNS) which is equivalent to BAT, PSES, and BMPs with the addition of extended delignification (oxygen delignification or extended cooking) on a new 1000 tpd bleached papergrade kraft fiber line.

Table VII–7 presents the non-water quality environmental impacts of the selected technology basis for NSPS and PSNS, compared to conventional pulping and bleaching technology. These estimates are based on the same calculational methodology described under BAT and PSES, applied to a 1000 tpd model mill. Based on these estimates, EPA concludes that the process technologies that form the basis for NSPS and PSNS for the Bleached Papergrade Kraft and Soda subcategory pose no significant adverse non-water quality environmental impacts.

TABLE VII–7.—NON-WATER QUALITY ENVIRONMENTAL IMPACTS OF NSPS/PSNS FOR THE BLEACHED PAPERGRADE KRAFT AND SODA SUBCATEGORY

	1000 tpd fiber line
Wood Consumption	No Difference.
Effluent Flow	Moderate Decrease.[1]
BOD to Treatment	Decrease by 11,300 kg/day.
Sludge Generation	Decrease by 890 kg/day.
Carbon Dioxide	Decrease by 21,700 Mg/year.
Energy Impacts:	
Total Electricity Demand	Decrease by 222,600 million BTU/year in oil equivalent.
Total Steam Demand	Increase by 60,180 million BTU/year in oil equivalent.
Total Energy Demand	Decrease by 162,400 million BTU/year in oil equivalent.
Air Emissions:	
Hazardous Air Pollutants	Increase by 407 Mg/year.
Chloroform	No Difference.
Volatile Organic Compounds	Increase by 707 Mg/year.

TABLE VII–7.—NON-WATER QUALITY ENVIRONMENTAL IMPACTS OF NSPS/PSNS FOR THE BLEACHED PAPERGRADE KRAFT AND SODA SUBCATEGORY—Continued

	1000 tpd fiber line
Total Reduced Sulfur	Increase by 28 Mg/year.
Particulate Matter	Decrease by 12 kg/year.
Carbon Monoxide	Decrease by 3 Mg/year.
Nitrogen Oxides	Decrease by 28 Mg/year.
Sulfur Dioxides	Decrease by 56 Mg/year.

[1] See Section 11.4.1.3 of the Supplemental Technical Development Document, DCN 14487.

NSPS and PSNS that EPA is promulgating today for the Papergrade Sulfite subcategory are equivalent to BAT and PSES. Therefore, the NSPS and PSNS present no additional non-water quality environmental impacts.

VIII. Analysis of Costs, Economic Impacts, and Benefits

A. Summary of Costs and Economic Impacts

This section presents a summary of EPA's evaluation of the costs, economic impacts, and benefits of the Cluster Rules. A more detailed analysis is contained in the Economic Analysis for the National Emission Standards for Hazardous Air Pollutants for Source Category: Pulp and Paper Production; Effluent Limitations Guidelines, Pretreatment Standards, and New Source Performance Standards: Pulp, Paper, and Paperboard Category—Phase 1 (DCN 14649; hereafter, the Economic Analysis).

Today's action is a significant departure from prior EPA rulemakings in that, for one industry, EPA is considering the ramifications of implementing two major environmental statutes with respect to pollution control, industrial technology and operations, environmental impacts, costs, and economic impacts. As noted in Section II of this preamble, today's rulemaking establishes regulations that implement elements of both the CAA and CWA. The objective of this economic analysis is to provide the most accurate portrayal possible of the aggregate costs that the industry will face by implementing these regulations, as well as the economic, financial, and social impacts that EPA estimates will result from these costs. The economic impacts of the combined, or joint, costs of the final CWA (BAT, NSPS, PSES, PSNS, and BMP) requirements and the final and proposed CAA requirements (MACT I, MACT III, and proposed MACT II) are different than the impacts that would result from the costs of the CWA or CAA requirements considered separately. While EPA presents separately the CWA and CAA compliance costs and the economic impacts of those costs in this section, the Agency believes the most accurate estimation of the economic impacts that the pulp and paper industry will experience is derived by considering total (combined) compliance costs of both the CAA and CWA rules. Under the CWA, EPA considered the economic impacts of each option by subcategory, combining indirect and direct dischargers. EPA combined these groups because there are no differences between direct and indirect dischargers in each subcategory with respect to characteristics of wastewater generated or the model process technologies considered.

The compliance costs described in this section are EPA's best estimates of the actual costs facilities will incur to comply with the promulgated and proposed rules.

The total annualized and operation and maintenance (O&M) costs differ somewhat from the engineering cost estimates shown in Section VI. The annual O&M costs shown in this section include a general and administrative cost of four percent of capital costs, which makes these O&M costs significantly higher than the engineering O&M cost estimates shown in Section VI. The annualized costs shown in Section VIII are both pre-tax and post-tax. Pre-tax costs, because they capture total economic losses to society, are considered the social costs of the rule and are used for examining cost-effectiveness (Sections VIII.D.4 and VIII.F.1) and for comparing the costs and benefits of the rule (Section VIII.H). Post-tax costs, which represent the projected costs to a firm after tax shields for depreciation and other factors are accounted for, are used in the economic achievability determination under the Clean Water Act to evaluate facility closures, firm failures, and related impacts. Post-tax costs are used in Sections VIII.A, VIII.B, VIII.C, VIII.E, VIII.J, and most of Sections VIII.D and VIII.F.

EPA's financial and economic analyses reflect as accurately as possible the information that pulp and paper industry managers will consider in making financial decisions. The economic impacts described in this section (such as facility closures, job losses, and reduced shipments) result from the total costs that a facility will bear (including environmental compliance costs) compared to the facility's expected revenues. EPA also evaluated the aggregate costs for all facilities borne by each company to determine if each company will be in jeopardy of bankruptcy as a result of aggregate compliance costs.

In this section, EPA also describes the qualitative, quantitative, and monetized benefits of environmental improvements expected to result from compliance with these rules, and compares these benefits to the costs of the rules. EPA identified 158 mills at proposal with kraft, soda, sulfite or semi-chemical pulping processes. Of these, EPA now projects that 155 mills will bear costs under the final MACT I and 149 mills will bear costs under the proposed MACT II (six mills do not practice chemical recovery). These numbers could change over time as mills change processes or close operations.

EPA separately evaluated the compliance costs and economic impacts of: (1) MACT I for the 155 mills that pulp wood using kraft, soda, sulfite, or semi-chemical pulping processes; (2) combined final MACT I and proposed MACT II for those mills; and (3) proposed MACT II for combustion sources at the 149 mills. Although all of the regulatory options and alternatives under consideration for MACT II are evaluated in the EA, only the economic impacts related to the proposed regulatory alternative are presented here. EPA estimates that there will be no economic impacts associated with the MACT III regulations, which are promulgated for mills that practice mechanical, secondary fiber, or non-wood pulping or that produce paper or paperboard from purchased pulp, because EPA believes that compliance with MACT III requirements will neither impose costs nor result in additional emissions reductions. For this reason, Section VIII presents no

further analysis of the MACT III regulations.

EPA separately evaluated the impacts of the BAT, PSES, NSPS, PSNS, and BMP requirements for the 86 mills currently in the Bleached Papergrade Kraft and Soda subcategory and the 11 mills currently in three segments of the Papergrade Sulfite subcategory. (One mill is in both CWA subcategories.) Both direct and indirect discharging mills are subject to BMPs. Hereafter, EPA's reference to BAT/PSES costs includes the costs of complying with the final BMP requirements.

EPA also evaluated the costs and impacts for the combination of MACT I and BAT/PSES for the 96 bleached papergrade kraft and soda and papergrade sulfite mills that are affected by both rules. EPA also provides an estimate of the economic impacts when the proposed MACT II costs are combined with the MACT I and BAT/PSES costs for these 96 mills. Finally, the economic impacts and costs for all 155 kraft, soda, sulfite, and semi-chemical mills affected by air and/or water regulations are reported.

EPA also evaluated the impacts of NSPS or PSNS costs for new sources, both singly and in combination with MACT I and proposed MACT II costs.

EPA evaluated economic achievability based on the relative magnitude of compliance costs (in the form of total annualized costs) and the resulting potential facility closures, potential job losses, firm failures (potential bankruptcies), reduced value of shipments, balance of trade effects, and indirect effects (reduced regional and national output and employment which reflect the fact that impacts on the pulp and paper industry will resonate throughout the economy). Table VIII–1 presents a summary of annualized costs and projected mill closures for the various rules and rule combinations. The level of detail for reporting results in the preamble (and in the EA) is sometimes constrained in order to protect confidential business information. For that reason facility closures and job losses, for example, are not identified for certain combinations of rules. All of the results are contained in the confidential portion of the rulemaking record.

TABLE VIII–1.—SUMMARY: COSTS AND ECONOMIC IMPACTS OF CAA AND CWA RULES

Costs and impacts	Rules					
	MACT I (final) (all mills)	MACT II (proposed) (all mills)	BAT/PSES (final) (BPK&PS) [1]	MACT I and BAT/PSES (final) (BPK&PS)	MACT I, BAT/PSES and MACT II (BPK&PS)	MACT I, BAT/PSES and MACT II (all mills)
Pre-Tax Annualized Costs ($ MM) [2]	125	32	263	351	366	420
Post-Tax Annualized Costs($ MM)	82	23	172	229	240	277
Mill Closures	0	0	1	2	3	3
Firm Failures	0	0	0	0	0	0

[1] BPK: Bleached Papergrade Kraft and Soda subcategory PS: Papergrade Sulfite subcategory.
[2] Pre-Tax costs are not used in determining economic achievability.

MACT Costs: Total annualized MACT I costs for 155 facilities in all subcategories regulated today are $82 million (all annualized costs presented in Section VIII are post-tax costs in 1995 dollars, except where noted). These costs differ from the engineering MACT control cost estimates presented in Section VI, as noted above and in Section VIII.B.1.c. Total annualized proposed MACT II costs for all subcategories that EPA proposes to regulate are $23 million. No mill closures, job losses, or firm failures are projected when either MACT I or proposed MACT II costs are analyzed individually. When the costs for final MACT I and proposed MACT II are combined, the (post-tax) annualized costs are $105 million and result in one estimated mill closure and losses of up to 700 jobs. No firm failures are predicted as a result of the combined costs of MACT I and MACT II.

BAT/PSES Costs: EPA estimated economic impacts for three BAT/PSES options (Option A, Option B, and TCF) for all bleached papergrade kraft and soda mills. Section VI.B.5.a(1) of this preamble contains a description of each option. The naming conventions of Option A, Option B, and TCF, which EPA introduced in that section, are also used here. EPA selected Option A as the technology basis for BAT/PSES for the Bleached Papergrade Kraft and Soda subcategory (see Section VI.B.5.a(5)). For the 11 mills in three segments of the Papergrade Sulfite subcategory, the Agency estimated the economic impacts of one technology for each segment. EPA selected those technologies as the bases for BAT/PSES for this subcategory (see Sections VI.B.6.b and d). EPA presents a summary of the economic impacts of the selected BAT/PSES technology bases immediately below. A summary of the economic impacts for the rejected BAT/PSES options in the Bleached Papergrade Kraft and Soda subcategory is presented in Section VIII.F.

Total annualized costs for the selected BAT/PSES for the 96 mills in the Bleached Papergrade Kraft and Soda and Papergrade Sulfite subcategories are $172 million. One mill closure is predicted for the Bleached Papergrade Kraft and Soda subcategory as a result of compliance costs. Estimates of job losses are not presented in order to protect confidential business information. EPA estimates no closures for the Papergrade Sulfite subcategory as a result of compliance costs. EPA estimates that no firm failures will result from BAT/PSES in these subcategories. Based on current information, EPA projects that there may be some new sources, most likely new fiber lines at existing pulp and paper mills. EPA has identified the per plant NSPS/PSNS costs for the Bleached Papergrade Kraft and Soda and the Papergrade Sulfite subcategories. EPA did not have sufficient information to reliably project the likely number of new sources (see Section VIII.D). EPA also expects that many replacement fiber lines constructed at Subpart B mills will be enrolled in the Voluntary Advanced Technology Incentives Program and will therefore be existing sources rather than new sources. 40 CFR 430.01(j)(2). EPA also conducted a barrier to entry analysis for new sources, discussed below.

Combined Costs: The combined annualized costs for MACT I and BAT/PSES, affecting 96 bleached papergrade kraft and soda and papergrade sulfite mills, are $229 million. As a result of these costs, two mills in the Bleached Papergrade Kraft and Soda subcategory are projected to close with an associated loss of 900 jobs. See Table VIII–3. No

mills are projected to close in the Papergrade Sulfite subcategory as a result of compliance costs. No firm failures are predicted.

The combined annualized costs for the proposed and final rules (MACT I, BAT/PSES, and proposed MACT II) affecting the 96 bleached papergrade kraft and soda and papergrade sulfite mills are $240 million. With these combined costs, three mills are projected to close. The associated job losses increase with the additional projected closure, but the estimate is not reported here in order to protect confidential business information. No firm failures are expected to result from the combined costs of MACT I, BAT/PSES, and proposed MACT II for these mills.

The annualized costs for the proposed and final rules (MACT I, BAT/PSES, and MACT II) applicable to all 155 kraft, soda, sulfite, and semi-chemical mills are $277 million. With these combined costs for all rules and all 155 mills, the impacts are unchanged; i.e., three mills are projected to close, job losses exceed 900, and no firm failures are expected.

B. Overview of Economic Analysis

1. Revisions in Analysis From Proposal

a. Subcategories. Based on the subcategorization described in Sections II.C.1, VI.A and VI.B.1, EPA estimated impacts for four CAA subcategories—Kraft, Sulfite, Soda, and Semi-Chemical Process—and two CWA subcategories—Papergrade Sulfite and Bleached Papergrade Kraft and Soda. The economic analysis addresses 155 mills in the CAA subcategories and 96 mills in the CWA subcategories. The 96 CWA mills are a subset of the 155 CAA mills.

b. Options. (1) Air Emissions Standards. The selected technology bases for the MACT I & III standards are discussed fully in Section II.B.2 of this preamble. Regulatory options and alternatives for MACT II are discussed in Section IV.F of the preamble to the proposed MACT II standards, which appears elsewhere in today's **Federal Register**, and in the Economic Analysis (DCN 14649). EPA's economic analysis presents results for eight regulatory alternatives. The summary presented here pertains only to the final MACT I standard and proposed MACT II standard.

(2) Effluent Limitations Guidelines and Standards. For the BAT/PSES analyses for the Bleached Papergrade Kraft and Soda subcategory, EPA's economic analysis addresses three technology options. The summary presented in this section of the preamble focuses on Option A, the selected BAT/PSES option, but a brief discussion of the impacts for the rejected options appears below in Section VIII.F. For the Papergrade Sulfite subcategory, EPA's economic analysis (and the summary presented here) analyzes only the technologies selected as the bases for the BAT/PSES for each segment. This is because EPA identified no technically available options for the three papergrade sulfite segments other than those considered and selected.

NSPS/PSNS costs for new sources are presented in Section VIII.D.

c. Methodology. The methodologies used by EPA to evaluate economic impacts at the time of proposal are fully discussed in the Economic Impact and Regulatory Flexibility Analysis of the Proposed Effluent Limitations Guidelines and NESHAP for the Pulp, Paper, and Paperboard Industry (EPA–821–R–93–021, November, 1993). Revisions to these methodologies are discussed below and more fully in Chapters 3 and 4 of the Economic Analysis (DCN 14649).

As discussed or referenced in the July 15, 1996 Notice, EPA revised components of the economic methodology to account for recent changes that have occurred in the pulp and paper industry, including: (1) revision of the discount rate; (2) integration of market (price change) effects into the financial closure model; (3) incorporation of new industry cycle data into the forecasting methodology; (4) adjustment of the starting year for the analysis to 1996; (5) incorporation of updated mill ownership data in the firm failure model; and (6) a revised method for calculating annual costs. See 61 FR at 36843–44. Each of these methodology revisions is briefly discussed below.

At proposal, EPA used a facility-specific cost of capital (an average of nine percent real cost of capital) derived from responses to a 1989 industry survey) that reflected financing costs in 1989. Real (inflation-adjusted) financing costs declined considerably between 1989 and 1995. For the final rule, EPA primarily used an inflation-adjusted seven percent cost of capital or discount rate in the economic analysis because this rate better reflects real industry financing costs from 1995 to 1997, and the Agency does not have accurate information on current facility-specific financing costs. Additionally, the Office of Management and Budget recommends a seven percent discount rate to evaluate the social costs of federal regulations. In Chapter 6 of the Economic Analysis (DCN 14649), EPA presents a sensitivity analysis of results using alternative discount rates.

At proposal, EPA used both a financial model and a comprehensive market model to assess economic effects. Much of the information in the market model was derived from the 1989 survey. A number of substantial changes have occurred in pulp and paper markets since 1989 that the market model does not reflect. EPA decided not to update the market model (which estimated price increases), because an update would have required a new survey of every mill and all product lines, which would have been unnecessarily costly and burdensome to mill operators. EPA was also concerned that the amount of time required for conducting and analyzing a second survey would unnecessarily delay the final rule. This would further extend the industry's inability to plan and make capital investments with certainty regarding regulatory requirements. Instead, EPA modified the financial model to incorporate product supply and demand elasticities, which are estimates of changes in demand or supply in response to price changes. The summary of results presented in this preamble does not reflect the effects of price increases, because such changes did not materially affect EPA decisions. Chapter 6 of the Economic Analysis (DCN 14649) presents all of the results.

The last year of price information available at proposal was 1988. Between 1988 and 1995, the pulp and paper industry completed a full industry revenue cycle, with revenues peaking in 1988, falling through 1992, and reaching historic heights in 1995. For the final rule, this newer information was incorporated into the forecasting methods for the financial closure model, which assumes this seven-year cycle (a six-year cycle was used at proposal) of falling and rising prices will continue into the future. Additionally, the starting year for the analysis was adjusted to 1996 (from 1989, which was used at proposal).

To identify potential firm failures (i.e., bankruptcies) using the Altman's Z financial ratio analysis, EPA obtained updated financial information, including mill ownership data, for publicly held companies. Because updated information for privately held companies was not available from public sources, EPA did not evaluate possible failures among private firms. To include these companies would have required a new industry survey.

A facility-level financial analysis that was conducted at proposal was discontinued because EPA was also unable to update facility-level financial information without a new survey. The facility-level analysis is not a

component of the Altman's Z analysis, on which EPA has relied to identify firm failures for this final rule. While providing some useful information, the facility financial analysis was not used to identify firm-level bankruptcies at proposal and did not provide the basis at proposal for making determinations of economic achievability.

As noted in Section VIII.A., EPA considers general and administrative as well as variable annual costs in the cost annualization calculation. At proposal, general and administrative costs (GAC) had been calculated as 4 percent of capital costs plus 60 percent of variable annual costs. Subsequent analysis indicated that the engineering estimates for effluent control already included the 60 percent of variable annual costs. To remove this double-counting, GAC is now calculated as four percent of capital costs for effluent control (see DCN 14086). GAC is added after the engineering estimates prior to cost annualization; this explains the differences between engineering and economic estimates of operating and maintenance costs.

All of the previously discussed revisions were made in an effort to conduct an economic analysis of the air and water regulations that is more representative of current economic conditions in the pulp and paper industry and that provides more accurate economic impact results.

C. Costs and Economic Impacts for Air Emissions Standards

Table VIII–2 presents the engineering control cost estimates for MACT I and for the regulatory alternative proposed for MACT II: $755 million in total capital costs and $172 million in annualized costs. A more detailed discussion of the control costs for the final MACT standard, including emission reductions and cost-effectiveness, is provided in Chapter 20 of the Background Information Document. Table VIII–2 also presents the capital costs and pre-tax and post-tax annualized costs used in the economic analysis. EPA has determined that the MACT III standards will impose no costs; therefore, none is presented here or in Table VIII–2.

As noted in Section VIII.A. and Chapter 5 of the Economic Analysis, the engineering control cost estimates of the cost of MACT regulations differ from the costs used in EPA's economic impact analysis of those standards. The economic analysis also differentiates between pre-tax annualized costs and post-tax annualized costs as discussed in Section VIII.A.

TABLE VIII–2.—ESTIMATES OF THE COST OF AIR REGULATIONS

[Millions of dollars]

Regulation	MACT control cost estimates		Economic analysis MACT cost estimates		
	Capital costs	Annualized cost	Capital cost	Annualized costs	
				Pre-tax	Post-tax
MACT I	$496	$130	$501	$125	$82
MACT II	259	42	258	32	23
Total Air	755	172	759	157	105

Based on the economic analysis, EPA predicts no firm failures, mill closures, or associated job losses as a result of the costs of the MACT rules considered individually. When the costs of the MACT rules are combined, EPA projects one mill closure with up to 700 job losses. No firm failures are anticipated for the combined MACT rules.

D. Costs and Economic Impacts for Effluent Limitations Guidelines and Standards

1. BPT and BCT

As explained in Section VI.B.2, EPA is exercising its discretion not to revise BPT limitations for conventional pollutants at this time for Subparts B and E. In addition, candidate BCT technologies do not pass the two-part BCT cost reasonableness test. Therefore, EPA is not revising the current BCT limitations for Subparts B and E mills; as a result, these mills will incur no incremental BPT or BCT costs.

2. Bleached Papergrade Kraft and Soda Subcategory

a. BAT/PSES. For the selected BAT/PSES (Option A), capital costs are $966 million, O&M costs are $151 million, and annualized costs are $162 million. When considering these costs alone, the economic analysis predicts closure of one mill as a result of this rule and no firm failures. Other economic impacts (e.g., job losses) are reported in the CBI portion of the rulemaking record.

b. NSPS and PSNS. EPA considered the cost of NSPS and PSNS technology for new source mills in the Bleached Papergrade Kraft and Soda subcategory. EPA expects few new source mills or fiber lines to be constructed that will be subject to NSPS/PSNS. Even if new source mills or fiber lines are constructed that are subject to NSPS/PSNS, EPA estimates that the selected NSPS/PSNS would not present a barrier to entry. EPA estimated the average incremental capital costs of NSPS/PSNS compliance (compared to Option A technology) to be approximately 0.50 to 2.0 percent of the capital cost of constructing a new source mill or fiber line and concluded that this cost was not sufficient to present a barrier to entry for proposed entrants, particularly considering the lower operating costs of Option B.

3. Papergrade Sulfite Subcategory

a. BAT/PSES. As explained in Section VI.B.6.a, EPA is dividing the Papergrade Sulfite subcategory into three segments. For BAT/PSES for all three segments combined, capital costs are $73.8 million, O&M costs are $7 million, and annualized costs are $9.8 million. No mills are projected to close as a result of these compliance costs, and no firms are projected to fail. There is no expected loss of jobs, shipments, or exports.

b. NSPS/PSNS. EPA considered the costs of NSPS/PSNS for new source mills in the Papergrade Sulfite subcategory. Because NSPS/PSNS equals BAT/PSES, EPA concluded that such costs were not sufficient to present a barrier to entry. First, the cost of the NSPS/PSNS technology is an insignificant fraction of the capital cost of a new source mill or fiber line (less than one percent). Also, the costs of including the selected NSPS/PSNS technology at a new source mill are substantially less on a per ton basis than the costs of retrofitting existing mills. Moreover, the increased chemical recovery and reduced operating costs for the NSPS/PSNS option allow firms to

recover the capital cost associated with the NSPS/PSNS technology.

4. Cost-Effectiveness

EPA uses a cost-effectiveness ratio of dollars per toxic pound equivalent removed (see Economic Analysis (DCN 14649), Chapter 5) to evaluate the relative efficiency of a technology option in removing toxic pollutants. The results reported below are expressed in 1981 dollars, as prescribed by EPA's cost-effectiveness methodology (DCN 14649). For the Bleached Papergrade Kraft and Soda subcategory, the cost-effectiveness ratio for both BAT and PSES is $14 per toxic pound equivalent removed. The cost-effectiveness ratios for the Papergrade Sulfite subcategory are $13 per toxic pound equivalent removed for BAT and $45 per toxic pound equivalent for PSES. EPA considers the selected technology bases for the BAT/PSES limits for both subcategories to be cost-effective.

E. Costs and Impacts for the Integrated Rules

EPA estimates that 155 kraft, soda, sulfite, and semi-chemical mills will incur costs to comply with the CAA rules; 96 bleached papergrade kraft and soda and papergrade sulfite mills will incur costs to comply with the CWA rule, and the same 96 mills will incur both CAA and CWA rule costs. Table VIII–3 is a summary of the expected costs and impacts for various combinations of CAA and CWA rules. The losses of jobs, shipments, exports, and indirect effects reported in Table VIII–3 are the impacts derived from mill closures. Some results are not disclosed where confidentiality might be compromised.

TABLE VIII–3.—COSTS AND ECONOMIC IMPACTS OF CAA AND CWA RULES

Costs and Impacts	Rules					
	MACT I (final)	MACT II (proposed)	BAT/PSES (BPK&PS)[1]	MACT I & BAT/PSES (96 mills)	MACT I, BAT/PSES & MACT II (BPK&PS) (96 mills)	MACT I, BAT/PSES & MACT II (155 mills)
Capital Costs ($MM)	501	258	1,039	1,394	1,524	1,799
Post-Tax Annualized Costs ($MM)	82	23	172	229	240	277
Mill Closures	0	0	1	2	3	3
Firm Failures	0	0	0	0	0	0
Job Losses (from mill closures)	0	0	400	900	1,700	1,700
Decreased Shipments ($MM)	0	0	150	273	479	479
Decreased Exports ($MM)	0	0	19	19	22	22
Direct and Indirect Effects ($MM)	.....	.....	430	795	1,393	1,393

[1] BPK: Bleached Papergrade Kraft and Soda subcategory.
PS: Papergrade Sulfite subcategory.

While no mills are predicted to close due to MACT I costs alone, and one mill in the Bleached Papergrade Kraft and Soda subcategory is predicted to close due to BAT/PSES costs alone, EPA estimates that two mills in the Bleached Papergrade Kraft and Soda subcategory may close as a result of the combined costs imposed by these rules. The two predicted closures represent approximately 2.3 percent of the 86 bleached papergrade kraft and soda mills and 1.3 percent of all 155 kraft, sulfite, soda, and semi-chemical mills affected by this rulemaking. As a result of these two closures, 900 jobs could be lost. These jobs represent 0.9 percent of the jobs in the Bleached Papergrade Kraft and Soda subcategory. These costs generate a maximum estimated price increase of 1.5 percent for any product (pulp, paper or paperboard). Estimated losses in the value of shipments are approximately $273 million, or 0.8 percent of bleached papergrade kraft and soda shipments, while losses in the value of bleached papergrade kraft and soda exports are approximately $19 million, or 0.5 percent of subcategory exports.

No mills are projected to close in the CWA Papergrade Sulfite subcategory, or the CAA soda, sulfite, or semi-chemical subcategories as a result of either the promulgated CAA or CWA regulations or a combination of both.

EPA examined the indirect effects of the final regulations (MACT I, MACT III and BAT/PSES) on employment and output using a national-level input-output model developed by the U.S. Department of Commerce. The model provides multipliers that enable EPA to estimate national-level impacts based on the loss of employment and output from closing mills. Total projected effects on the U.S. economy of the combined MACT I and BAT/PSES are approximately 5,700 jobs lost and $795 million in lost economic output. While some local communities could experience some economic dislocation as a result of closures, overall national impacts would be insignificant. For comparison, the 1995 U.S. gross domestic product was $7.3 trillion. The loss is approximately one-tenth of 1 percent of the gross domestic product for 1995. EPA also evaluated regional (county-level) economic impacts when determining the economic achievability of the regulation. For the final MACT I and BAT/PSES, in the two counties where mills are projected to close, the unemployment rate would increase by 0.4 percent and 0.7 percent respectively.

In response to public comments, EPA also estimated the economic impacts associated with the combined costs of promulgated and proposed rules. When the MACT I, BAT/PSES, and MACT II costs are considered jointly, EPA projects an additional mill closure with 800 additional jobs lost and further decreases of $206 million in shipments and $3 million in exports. The total projected effects of the combined MACT 1, BAT/PSES, and MACT II costs are approximately 10,000 jobs lost and $1.4 billion in lost economic output.

F. Costs and Impacts of Rejected BAT/PSES Options for the Bleached Papergrade Kraft and Soda Subcategory

1. Summary of Results

Table VIII–4 presents costs and impacts for two options (Option B and TCF) that EPA evaluated, but did not select, as the basis for BAT/PSES for the Bleached Papergrade Kraft and Soda subcategory. EPA's rationale for selecting Option A for BAT/PSES for this subcategory is presented in Section VI.B.5.a(5). Table VIII–4 presents results in three ways: considering CWA costs and impacts alone; considering the costs and impacts of the rejected BAT/PSES options and MACT I; and considering

the costs and impacts of the rejected BAT/PSES options, MACT I, and MACT II.

TABLE VIII–4.—COSTS AND ECONOMIC IMPACTS OF REJECTED BAT/PSES OPTIONS FOR THE BLEACHED PAPERGRADE KRAFT AND SODA SUBCATEGORY

Costs & Impacts	Rules					
	Option B (BAT/PSES)	TCF (BAT/PSES)	Option B (BAT/PSES)+ MACT I	TCF + (BAT/PSES) MACT I	Option B (BAT/PSES) MACT I & MACT II	TCF, (BAT/PSES) MACT I & MACT II
Capital Costs ($MM)	2,100	3,100	2,600	3,600	2,700	3,700
Post-Tax Annualized Costs ($MM)	216	688	292	764	300	772
Mill Closures	2	7	4	9	ND[1]	9
Firm Failures	(3)	(3)	(3)	(3)	(3)	(3)
Job Losses (from mill closures)	900	7,100	4,800	10,200	ND	10,200
Decreased Shipments ($MM)	273	2,300	1,300	3,200	ND	3,200
Decreased Exports ($MM)	19	308	24	310	ND	310
Direct and Indirect Effects ($MM)	795	NR	3,850	NR	ND	NR

[1] ND: not disclosed to protect confidential business information.
[2] NR: not reported.
[3] 1 or more.

Option B: The BAT/PSES capital costs for Option B for the Bleached Papergrade Kraft and Soda subcategory are estimated at $2.1 billion; O&M costs are $87 million; and annualized costs are $216 million. These costs result in two projected mill closures, with direct impacts of at least 900 jobs lost, $273 million in decreased shipments, $19 million in decreased exports, and one or more potential firm failures. The firm failures may also result in thousands of additional jobs lost (see Section VI.B.5.a(5) and Chapter 6 of the Economic Analysis, DCN 14649). Indirect and direct economic loss (i.e., losses throughout the economy as a result of the closed mills) would be approximately $795 million. The mill closures are projected to increase county unemployment rates for the affected counties by 0.4 percent and 0.7 percent, respectively.

EPA also calculated cost-effectiveness ratios for Option B for this subcategory (for Option A results, see Section VIII.D.4, above). For direct dischargers, the average and incremental (compared to Option A) cost-effectiveness ratios are $15 per toxic pound-equivalent and $36 per toxic pound-equivalent, respectively (1981 dollars). For indirect dischargers, the incremental cost-effectiveness (compared to Option A), is $115 per toxic pound-equivalent.

Option B and MACT I: The combined capital costs for Option B and MACT I for mills in this subcategory are estimated at $2.6 billion; O&M costs are $154 million; and annualized costs are $292 million. MACT I annualized costs are greater under Option B than under Option A due to the additions of MACT controls for oxygen delignification equipment installed to comply with Option B. With the combined costs of Option B and MACT I, the number of projected mill closures increases to four, and the estimated number of firm failures remains unchanged at one or more. The four closures cause losses of approximately 4,800 jobs, $1.3 billion in shipments, and $24 million of exports. Direct and indirect losses would total nearly $4 billion. The mill closures are also projected to increase county unemployment rates; the range of increased unemployment for the affected counties is from less than 0.5 percentage points to nearly 10 percentage points (as a hypothetical example, from a baseline county unemployment rate of 10 percent to 10.5 percent after a closure in County X and from a baseline of 10 percent to 20 percent after a closure in County Y).

Option B, MACT I, and MACT II: The combined capital costs for Option B, MACT I, and proposed MACT II for mills in this subcategory are estimated at $2.7 billion; O&M costs are $153 million; and annualized costs are $300 million. With the combined costs of Option B, MACT I, and MACT II, the number of projected mill closures increases (number not disclosed), and the estimated number of firm failures remains unchanged at one or more. The analysis projects additional losses to jobs, shipments, and exports from the additional mill closures (amounts not disclosed). Direct and indirect losses would also increase, as would the unemployment rates in the counties in which the mill closures are located.

TCF: The capital costs for retrofitting mills in this subcategory for TCF technology are estimated at $3.1 billion for TCF based on peroxide bleaching and $5.6 billion for TCF based on ozone and peroxide bleaching, respectively. EPA evaluated mill closures for the TCF option with the lower capital costs. O&M costs for this option are $783 million, and annualized costs are $688 million. (TCF annualized costs appear lower than annual O&M costs because of tax shields.) EPA estimates that these costs would result in seven mill closures, which are associated with approximately 7,100 job losses. EPA did not conduct a firm failure analysis or calculate combined direct and indirect impacts for this option because the closures and job losses alone are more than sufficient indication that the option is not economically achievable. EPA estimates, however, that a greater number of firms would be placed in financial jeopardy with the costs of this option, compared to Option B, which EPA has already determined is not economically achievable (See Section VI.B.5.a(5)).

TCF and MACT I: The combined capital costs for TCF and MACT I for mills in this subcategory are estimated at $3.6 billion; O&M costs are $851 million, and annualized costs are $764 million. EPA estimates that these costs would result in nine mill closures and an associated loss of 10,200 jobs, $3.2 billion in shipments, and $310 million in exports. EPA conducted no additional economic analysis for this combination of costs.

TCF, MACT I, and MACT II: The combined capital costs for TCF, MACT I, and MACT II for mills in this subcategory are estimated at $3.7 billion; O&M costs are $849 million; and annualized costs are $772 million. With the combined costs of TCF, MACT I, and MACT II, EPA estimates that the number of mill closures, job losses, and

other impacts remain unchanged. EPA conducted no additional economic analysis for this combination of costs.

2. Implications of Results

The costs of either Option B or TCF are projected to cause one or more firm failures (bankruptcies). This is true even when the BAT/PSES costs are considered without the compliance costs associated with MACT I and/or MACT II. Although EPA cannot determine the actual outcome of the projected failures in terms of lost production, closed facilities, and lost jobs, the level of displacement would almost certainly cause detrimental impacts to the U.S. pulp and paper industry. Section VI.B.5.a(5) discusses EPA's reaction to these projected impacts in terms of regulatory decisions. See also Chapter 6 of the Economic Analysis, DCN 14649. That discussion also includes the Agency's findings that the rejected BAT/PSES options are not economically achievable.

G. Benefits

In addition to costs and impacts, EPA also estimated the environmental and human health benefits of implementing the CAA and CWA requirements. Section VII of this preamble describes the estimated reductions in air emissions and effluent discharges. The incremental environmental improvements noted in Section VII.B. are derived compared to a baseline of current emissions and discharges. Because current emissions and discharges are a function of current technology, this is the same baseline that was used to establish the costs of complying with the rules. To the extent the total benefits of the rule can be measured, costs can be directly compared to benefits.

EPA is confident that its estimation of compliance costs is a full and accurate account of such costs; EPA is less confident that the estimation of benefits is similarly complete. EPA is not currently able to quantitatively evaluate all human and ecosystem benefits associated with air and water quality improvements. EPA is even more limited in its ability to assign monetary values to these benefits and therefore to be able to compare them to costs in a standard cost-benefit framework. A comparison of costs to only the limited monetized subset of benefits severely underestimates the true benefits of environmental quality improvement and compromises the validity of a cost-benefit analysis. The economic benefit values described below and in the Economic Analysis (DCN 14649) should be considered a limited subset of the total benefits of these rules, and should be evaluated along with descriptive assessments of benefits and the acknowledgment that even these may fall short of the real-world benefits that will result from the rule.

1. Air Quality Benefits

Section VII.B.1 of this preamble describes the emissions reductions expected as a result of implementing MACT I and MACT II standards. Implementation of the final MACT I standard is expected to reduce emissions of HAPs, VOCs, and TRS, but increase emissions of PM, SO_2, CO, and NO_X. The proposed alternative for MACT II is expected to reduce emissions for HAPs, VOCs, PM, TRS, CO, and SO_2, while it is expected to create a slight increase in NOx emissions. The technology bases for BAT/PSES have secondary impacts on the level of air emissions. The combined effect of MACT I and MACT II for all subcategories regulated under the CAA is to decrease emissions for all of the above mentioned pollutants except NO_X and SO_2. See Table VIII–5 below. EPA performed an evaluation of the benefits associated with the air regulations based on the emission reductions estimated in Section VII.B.1. The net change in air benefits expected to result from the changes in emissions will be a change in adverse health effects associated with inhalation of the above pollutants as well as changes in welfare effects such as improved visibility and crop yields, and reduced materials soiling and corrosion. Chapter 4 of the EA presents a detailed description of the methodology used to monetize the benefits.

a. Qualitative Description of Pollutant Effects. The air rules are designed to reduce the emission of HAPs as defined in Section 112 of the CAA. Several of these HAPs are classified as probable or possible human carcinogens. Reducing the emissions of these pollutants is expected to reduce the cancer risk of the exposed population. Other HAPs are not classified as carcinogens; however, they have been shown to cause other adverse health effects such as damage to the eye, central nervous system, liver, kidney, and respiratory system when the concentration of these emissions is above the health reference benchmark for human exposure.

Total reduced sulfur (TRS) emissions cause the malodorous smell often associated with areas near pulp and paper mills. The MACT standards will reduce these effects significantly. Odorant stimulants of the nasal receptors that are associated with TRS emissions have been associated with marked respiratory and cardiovascular responses, however, the association is not direct because the perception of the odor does not necessarily cause toxic effects. The threshold for odor detections may occur before the onset of toxic effects. However, the absence of odor does not guarantee safety since some components of TRS emissions can cause fatigue of the olfactory senses, so individuals may not perceive an odor on some occasions when toxic effects can occur. There are numerous anecdotal reports of adverse reactions related to odors associated with TRS, including headaches, shortness of breath, nasal irritation, and, in some cases, nausea and sinus congestion.

VOC and NO_X emissions interact in the presence of sunlight to create ground-level ozone. Recent scientific evidence shows an association between elevated ozone concentrations and increases in hospital admissions for a variety of respiratory illnesses and indicates that ground-level ozone not only affects people with impaired respiratory systems (such as asthmatics), but healthy adults and children as well. Adverse welfare effects of ozone exposure include damage to crops, tree seedlings, ornamentals (shrubs, grass, etc.), and forested ecosystems. The reactions between VOCs and NO_X to form ozone depend on the balance in concentrations of each pollutant found in the ambient air. For example, when the concentration of NO_X is high relative to the concentration of VOCs, VOC reductions are effective in limiting ozone formation, while NO_X reductions in that situation are ineffective. The integrated rule is expected to increase NO_X emissions, but decrease VOC emissions. The increase in NO_X is not expected to cause significant adverse health or environmental impacts because the magnitude of this increase is much less than the magnitude of the VOC emission reduction. The VOC reductions are expected to contribute to the decrease in ozone concentrations.

The adverse human health effects associated with PM include: premature mortality; aggravation of respiratory and cardiovascular disease (as indicated by increased hospital admissions and emergency room visits, school absences, work loss days, and restricted activity days); changes in lung function and increased respiratory symptoms; alterations in lung tissue and structure; and altered respiratory tract defense mechanisms. Populations at greater risk from exposure are: individuals with respiratory disease and cardiovascular disease, individuals with infectious disease, elderly individuals, asthmatic individuals, and children. Reduced

welfare is associated with elevated concentrations of fine particles which reduce visibility, damage materials, and cause soiling. The integrated rule will decrease the adverse effects of PM.

CO is a colorless, odorless gas that is toxic to mammals. When inhaled, it combines with hemoglobin, which reduces the oxygen-carrying capacity of blood and results in less oxygen being transported to vital organs of the body. This can have detrimental effects on the cardiovascular, central nervous, and pulmonary systems. The reduction of CO emissions will diminish these potential effects.

SO_2 oxidizes in water to form both sulfurous and sulfuric acids. When SO_2 dissolves in the water of the respiratory tract of humans, the resulting acidity is irritating to the pulmonary tissues, causing nasal irritation and breathing difficulties (especially to individuals with respiratory diseases such as asthma). When SO_2 dissolves in the atmosphere in rain, fog, or snow, the acidity of the deposition can corrode various materials and cause damage to both aquatic and terrestrial ecosystems. SO_2 can also transform into $PM_{2.5}$, the effects of which are discussed above.

b. Monetized Air Quality Benefits. Table VIII–5 below presents both the health and welfare benefits described in this section as well as the emission reductions identified in Section VII.B.1 that are not monetized but are considered in the evaluation of benefits.

The benefit transfer method is utilized to value a subset of the pollutants discussed above (VOC, SO_2, and PM). This method relies on previous benefit studies that have been conducted for the same pollutants that are impacted by the pulp and paper rulemaking. These studies provide useful data that can be transferred across contexts in order to approximate the benefits of the pulp and paper emission reductions.

TABLE VIII–5.—EMISSIONS REDUCTIONS AND ANNUAL AIR QUALITY BENEFITS

Pollutant	Standard					
	MACT I		MACT II		Combined	
	Decrease (Mg)	Value ($MM)	Decrease (Mg)	Value ($MM)	Decrease (Mg)	Value ($MM)
HAPs	139,000	NE	2,600	NE	142,000	NE
TRS	79,000	NE	—	NE	79,000	NE
NO_X	(5,200)	NE	(500)	NE	(5,700)	NE
VOC	409,000	24–1,055	32,600	2–84	441,000	26–1,139
PM	(83)	(1)	24,000	300	24,000	299
CO	(8,700)	NE	58,000	NE	49,000	NE
SO_2	(94,500)	(1,064)–0	30	0.1–0.3	(94,400)	(1,064)–0.3
Total		(1,040)–1,054		302–384		(739)–1,438

NE = not estimated.
Numbers in parentheses ( ) indicate emissions increases or negative benefits values.
Numbers in table rounded.

For VOCs, benefits are valued using estimates of a range of the average benefit per Megagram (Mg) derived from a recent benefit analysis conducted by EPA in the process of revising the ozone national ambient air quality standard (NAAQS) (see docket no. A–95–58: Regulatory Impact Analysis for the Particulate Matter and Ozone NAAQS and proposed Regional Haze Rule; July 1997). EPA values a range of VOC benefits reflecting (1) an assumption that the transfer of benefits must correlate with the areas that violate the ozone standard, and (2) an assumption that recognizes that reductions outside areas of violation of the ozone standard can have a positive benefit. Therefore, the range of values reflects the application of a range of values for the average benefit per Mg as they are applied to (1) the subset of VOC emission reductions in areas of violation, and (2) to all VOC emission reductions expected to be achieved by the integrated rule. The true value is likely to fall within this range. Using the range of values of the average benefit per Mg for ozone, monetized annual VOC benefits of MACT I emission reductions range from $24 million to $1,055 million. The lower-end of this range reflects an assumption of zero mortality effects associated with ozone exposure and assumes morbidity benefits occur only in areas predicted to violate the ozone standard, while the upper-end includes mortality estimates as are calculated for the upper-end of the range of ozone benefits is included in the NAAQS RIA and assumes morbidity benefits occur in all areas. For the proposed MACT II alternative, total annual VOC benefits range in value from approximately $2 million to $84 million. Therefore, total monetized VOC benefits of the integrated rule are approximately $26 million to $1,139 million.

For PM, a benefit transfer estimate is obtained from a benefit analysis of PM_{10} that was prepared to support the evaluation of the revised PM NAAQS (see Appendix C of the Regulatory Impact Analysis for the Particulate Matter and Ozone NAAQS and proposed Regional Haze Rule; July 1997). The average benefit per Mg derived from this study is applied to all changes in emissions of PM that result from the integrated rule. Using this value, the *loss* in total monetized annual PM benefits associated with MACT I is approximately $1 million. The proposed MACT II alternative achieves a *positive* benefit approximately equal to $300 million. Thus the combined value of PM benefits for the final and proposed pulp and paper air standards is $299 million.

For SO_2, the EPA transfers a benefit estimate from a national SO_2 strategy analysis conducted for the evaluation of the revised PM NAAQS (see docket no. A–95–54: Regulatory Impact Analysis for the Particulate Matter and Ozone NAAQS and proposed Regional Haze Rule; July 1997). This analysis shows that benefit values are higher in the eastern regions of the country when compared to the western regions. Therefore, EPA derives a range of benefit per Mg values for each segment of the country. In addition, EPA takes into consideration the uncertainty inherent in the estimate of MACT I SO_2 emission increases that may result from the rulemaking. Therefore for MACT I, EPA values all SO_2 emission increases to obtain a lower bound estimate of (negative) benefits and assumes zero emission increases due to the likely effects of mitigating behavior to obtain an upper bound estimate of zero

disbenefits. For MACT II, all emission reductions are valued. Using the range of values for the average benefit per Mg for SO_2 and the assumptions for the changes in emissions, monetized annual SO_2 disbenefits of MACT I range from $1,064 million down to $0. For the proposed MACT II alternative, total annual SO_2 benefits are from approximately $0.1 to $0.3 million. Therefore, total monetized SO_2 benefits (disbenefits) of the integrated rule are approximately ($1,064) million to $0.3 million.

Summing the monetized benefits and disbenefits for VOC, PM, and SO_2 emission changes provides a range of total annual benefits (disbenefits) for MACT I of approximately ($1,040) million to $1,054 million. Aggregate annual benefits attributed to MACT II range in value from $302 million to $384 million. Combining the benefits of the final and proposed air standards yields a range of total annual benefits from approximately ($739) million to $1,438 million.

These benefits are incomplete due to EPA's inability to quantify many benefit and disbenefit categories including individual health and welfare endpoints as well as the benefits and disbenefits of controlling entire pollutant categories. Pollutant categories that are not monetized are HAPs, TRS, CO, and NO_X.

c. Uncertainties Associated With Air Quality Benefits. Benefit per Mg estimates used to monetize PM and VOC emission reductions are uncertain because average benefit per Mg values do not take into account location-specific information such as the population exposed. The location-specific information is expected to have a significant effect on the estimated benefits associated with these emission reductions. Also, lack of information for several benefit categories precludes a complete quantification of all benefit categories (or disbenefits for pollutant increases).

2. Water Quality Benefits

This section describes environmental and human health benefits expected as a result of implementing new BAT/PSES limits at 92 of the 96 mills in the Bleached Papergrade Kraft and Soda and Papergrade Sulfite subcategories. (EPA estimated benefits for 92 mills because it did not have effluent discharge information from 3 mills and did not have receiving stream flow data for 1 mill). Because EPA was not able to project the number of new sources, EPA attributes no benefits to the final NSPS or PSNS regulations. Discharge of toxic, nonconventional, and conventional pollutants into freshwater, estuarine, and marine ecosystems may alter aquatic habitats, affect aquatic life, and adversely impact human health. See Section VII.B.2. Chlorinated organic compounds from chlorine bleaching, particularly 2,3,7,8-tetrachlorodibenzo-p-dioxin (TCDD) and 2,3,7,8-tetrachlorodibenzofuran (TCDF) are human carcinogens and human systemic toxicants and are toxic to aquatic life. These pollutants are persistent, resistant to biodegradation, and bioaccumulative in aquatic organisms. As of December 1995, states have issued 19 dioxin/furan-related fish consumption advisories near 18 papergrade sulfite and bleached papergrade kraft and soda mills (EPA, *National Listing of Fish Consumption Advisories,* June 1996).

EPA's analysis of these environmental and human health risk concerns and the water-related benefits resulting from the final effluent limitations guidelines and standards for these two subcategories is contained in the "Water Quality Assessment of Final Effluent Limitations Guidelines for the Papergrade Sulfite and Bleached Papergrade Kraft and Soda Subcategories of the Pulp, Paper, and Paperboard Industry" (WQA) (DCN 14650).

a. Qualitative Description of Water-Related Benefits. The final BAT limitations and PSES promulgated today for Subparts B and E will benefit aquatic life by reducing the pulp and paper industry's discharge of toxic and nonconventional pollutants, including a 91 percent reduction in TCDD and TCDF, a 69 percent reduction in AOX, an 83 percent reduction in chloroform, and an 82 percent reduction in chlorinated phenolic pollutants compared to mid-1995 discharge levels. Toxic and nonconventional pollutants will be reduced to levels below those considered to impact biota in many receiving waters. Pollution reduction numbers are provided in Section VII.B.2. Such impacts include acute and chronic toxicity, sublethal effects on metabolic and reproductive functions, and loss of prey organisms. Chemical contamination of aquatic biota may also directly and indirectly impact local pescivorous wildlife and birds.

b. Quantitative Estimates of Water-Related Benefits. EPA has quantified human health and aquatic life benefits using a site-specific analysis for baseline conditions and for the conditions that would result from pollutant removals under the rule. The final BAT limitations and PSES for Subparts B and E would result in a significant reduction of dioxins and furans in fish tissues. As a result, the largest quantifiable and monetizable water benefit is a reduction in number of potential excess cancer cases from the consumption of contaminated fish by recreational and subsistence anglers. The next largest category of monetized benefits includes recreational fishing benefits derived from lifting of all 19 existing dioxin/furan-related fish consumption advisories in waters downstream from mills in the Bleached Papergrade Kraft and Soda and Papergrade Sulfite subcategories. Removing fish consumption advisories would be expected to increase the number of recreational anglers at sites where advisories are lifted and to increase fishing enjoyment by existing anglers. Three of the 19 receiving streams with dioxin/furan-related fish consumption advisories also have advisories in place for other contaminants (from other sources) that will not be affected by this rule. No monetized benefits are expected to accrue for these streams at this time. Quantified, non-monetized benefits include reduction in exceedances of aquatic life and health-based ambient water quality concentrations.

(1) Fish Consumption Cancer Risks and Non-cancer Hazards. Upper-bound individual cancer risk, aggregate risk, and non-cancer hazards from consuming contaminated fish are estimated for recreational, subsistence, and Native American subsistence anglers. At proposal, concentrations of carcinogenic and systemic toxicants in fish were estimated using two site-specific models—a simple dilution model and EPA's draft Dioxin Reassessment Evaluation model (DRE)(DCN 14650). For the final rule, EPA used only the DRE model to estimate TCDD and TCDF levels in fish below 92 mills discharging into 73 receiving streams, as well as individual cancer risks and non-cancer hazards. Of these mills, two in the Bleached Papergrade Kraft and Soda subcategory discharge through the same pipe and therefore were treated as a single discharger. As a result, a total of 91 discharges from 92 mills were evaluated for the water quality assessment. EPA continues to use the simple dilution model to evaluate other chlorinated organics (i.e., three carcinogens and four systemic toxicants). EPA believes the DRE approach provides more reliable estimates of dioxin and furan fate and transport in the environment for use in human health assessments. The reasons for relying exclusively on the DRE for assessing impacts due to dioxin and furan are explained in greater detail in

Chapters 4 and 8 of the Economic Analysis (DCN 14649).

EPA is also updating fish consumption rates used to estimate cancer and non-cancer hazards. At proposal, EPA used 25 g/day for recreational anglers, and 145 g/day for subsistence anglers. The revised estimates are 21 g/day for recreational anglers and 48 g/day for subsistence anglers, based on data provided by the nationally based "Continuing Survey of Food Intake by Individuals" (CSFII), conducted by the U.S. Department of Agriculture. EPA is also using an updated fish consumption rate for Native American subsistence populations of 70 g/day, based on two studies (CRIFTC, 1994; Wolfe and Walker, 1989, in rulemaking record). This consumption rate represents an average fish consumption rate for Native Americans. (See Environmental Justice Analysis in Chapter 8 of the Economic Analysis, DCN 14649).

Projected individual cancer risks differ among the evaluated mills and among recreational, subsistence, and Native American subsistence fishermen due to the differences in consumption rates. TCDD and TCDF contribute most of the estimated cancer risks. The final BAT/PSES for the papergrade sulfite and Bleached Papergrade Kraft and Soda subcategories are projected to reduce average baseline individual cancer risks up to about one order of magnitude for each affected group—recreational, subsistence, and Native American subsistence populations. At both baseline and post-compliance, Native American subsistence populations are at about one order of magnitude higher risk than recreational anglers and less than one order of magnitude higher risk than subsistence fishermen in this assessment because of their comparatively higher fish consumption rates.

At proposal, EPA estimated exposed recreational and subsistence fishermen based on a comparison of creel survey results to licensed anglers in counties adjoining pulp mill streams. Based on these surveys, EPA estimated that 29 percent of county fishermen would use affected stream reaches and therefore could be exposed to contaminated fish. Since proposal, EPA has considered additional recreational angler survey information and has determined that a range of 10 percent to 33 percent of adjacent county-licensed anglers provides effective upper and lower bounds to the fishing effort expected on most affected stream segments. EPA's benefit estimation methodology is described in Chapter 4 of the Economic Analysis (DCN 14649).

EPA estimated the reduced annual cancer cases for combined recreational and subsistence angler populations as a result of the final BAT/PSES for the Papergrade Sulfite and Bleached Papergrade Kraft and Soda subcategories. The projected number of increased cancer cases for this population under baseline conditions due to pulp and paper discharges is 0.83 to 2.76 annual cancer cases. EPA estimates this number would decline to 0.1 to 0.35 excess cancer cases per year after implementation of the final BAT/PSES, thus eliminating approximately 0.73 to 2.41 annual cancer cases.

For Native American subsistence fishermen, EPA evaluated an upper bound total risk at baseline and post-compliance with the selected BAT/PSES. EPA assumed that the total population of the tribes with treaty-ceded fishing rights near pulp and paper mills consumed an average of 70 g/person/day of TCDD/TCDF contaminated fish. The projected number of increased cancer cases for this population under baseline conditions due to pulp and paper discharges is 0.14 annual cancer cases. EPA estimates this number would decline to 0.008 excess cancer cases per year after implementation of the final BAT/PSES.

With respect to non-cancer benefits, EPA examined the current discharge of four pollutants that have reference doses (RfDs) contained in EPA's Integrated Risk Information System (IRIS). The four pollutants are chloroform, pentachlorophenol, 2,3,4,6-tetrachlorophenol, and 2,4,5-trichlorophenol. The RfD represents an estimate, with uncertainty spanning perhaps an order of magnitude, of daily exposure—expressed in milligrams per kilogram of body weight per day (mg/kg/day)—that is likely to be without an appreciable risk of deleterious effects to a given population during a lifetime. (EPA notes that this analysis considers only the contribution of Subpart B and E pulp and paper current discharge effluent to the RfD; the contribution from other sources (background level of exposure) is not evaluated.)

For the four pollutants with RfDs in IRIS, EPA used the simple dilution model to determine fish tissue concentrations. EPA then estimated whether human consumption of fish by recreational, subsistence, and Native American subsistence populations exposed to the pollutants below pulp and paper mills would exceed a chemical-specific noncancer hazard quotient of 1.0. Hazard quotients are based on the relationship between fish tissue concentrations, fish consumption, and RfDs. If a hazard quotient exceeds 1.0, adverse effects might occur. None of the four pollutants with RfDs in IRIS is estimated to exceed a non-cancer hazard quotient of 1.0 under baseline or BAT/PSES conditions for recreational, subsistence, or Native American subsistence anglers.

EPA did not use the reference dose (RfD) approach to evaluate potential noncancer effects associated with dioxin/furan. The use of an RfD for dioxin/furan presents special problems. If EPA were to establish an RfD for dioxin/furan using the standard conventions of uncertainty, the RfD value would likely be one to two orders of magnitude below average background population exposure. As stated above, the RfD is a level that is likely to be without an appreciable risk; it is not an "action level" or exposure level where non-cancer effects are predicted. Where the RfD is below background levels, and where effects are not readily apparent at background levels, it is not appropriate to use the RfD for quantifying benefits.

As an alternative to using the RfD, EPA evaluated potential noncancer effects of dioxin/furan by comparing the modeled incremental exposure of dioxin/furan from fish consumption (based on results from the DRE model) to estimated ambient background levels (i.e., 120 picograms of toxic equivalents/day (pgTEQ/day)). EPA estimates that adverse impacts associated with dioxin/furan exposures may occur at or within one order of magnitude of average background exposures. As exposures increase within and above this range, the probability and severity of human noncancer effects most likely increases. EPA's analysis shows that the estimated dioxin/furan exposure from pulp and paper effluent at baseline exceeded estimated ambient background exposure by an order of magnitude for two mills, with the size of the exposed population ranging from 4,910 to 16,205 recreational and subsistence anglers. The selected BAT/PSES are projected to reduce the incremental exposure from fish consumption to a level that was not significantly different from estimated ambient background exposure. The size of the recreational and subsistence angler population exposed to dioxin/furan doses exceeding one order of magnitude greater than the background level would be zero under the selected BAT/PSES.

For Native American subsistence populations with treaty-ceded fishing rights, the maximum dioxin/furan exposure under baseline conditions is projected to be 803 pgTEQ/day. Under the selected BAT/PSES, the maximum exposure is reduced to 39 pgTEQ/day,

which is less than estimated background levels for the United States.

(2) Impact of BAT/PSES Controls on Dioxin/Furan-Related Fish Consumption Advisories. EPA estimates that all 19 dioxin/furan-related fish consumption advisories in place downstream of papergrade sulfite and bleached papergrade kraft and soda mills as of December 1995 would be lifted some time after the rule is implemented. Recent evidence indicates that dioxin/furan fish tissue concentrations decline within several years of removing dioxin/furan discharges, which is more rapidly than previously thought (see Chapter 9 of the Economic Analysis, DCN 14649). EPA accounts for potential latent dioxin/furan contributions from sediment to fish tissue by assuming a three-year lag before cancers from fish tissue consumption are reduced or dioxin/furan-related fish tissue advisories are lifted.

(3) Exceedances of Human Health-Based Ambient Water Quality Concentrations (AWQCs). EPA also has compared the modeled in-stream pollutant concentrations to human health water quality criteria or other toxic effect values, which are referred to as health-based AWQCs. Exceedances of health-based AWQCs indicate existing human health-based water quality problems.

EPA has analyzed the health-based AWQCs for the ingestion of organisms and the ingestion of water and organisms based on the simple dilution model. EPA estimates that no mills exceed the health-based AWQCs for ingestion of organisms only under baseline conditions or under the final rule. With respect to the ingestion of water and organisms, at baseline, three mills exceed AWQCs for two pollutants, chloroform and pentachlorophenol (a total of four exceedances). Under the rule, only one mill exceeds AWQCs (for pentachlorophenol).

EPA did not estimate exceedances of AWQCs for dioxin and furan because the simple dilution model is not well-suited for use in estimating human health effects associated with water column concentrations of hydrophobic chemicals like dioxin and furan. EPA did not use the DRE model for this analysis for dioxin/furan because results of the DRE model would not be comparable with AWQCs.

(4) Aquatic Life Benefits. EPA used the simple dilution approach to estimate exceedances of aquatic life AWQCs. This is a conservative approach that assumes all pollutants (including dioxin and furan) discharged to receiving streams are available to the biota. Although hydrophobic chemicals such as dioxins and furans will be associated primarily with suspended particulates and sediments, some concentrations will also be found in the water column near the discharge point. This is particularly true if discharges are assumed to be continuous because even though the pollutants might eventually become associated with suspended solids and sediment, they would also be present in the water column in the vicinity of the discharge on an ongoing basis prior to partitioning. Therefore, although it is conservative, EPA believes that the simple dilution approach provides a reasonable estimate of impacts to aquatic life.

EPA compared modeled in-stream concentrations of toxic discharges to EPA's aquatic life AWQCs. EPA's modeling results show that receiving water concentrations for up to four pollutants (of 15 pollutants with chronic aquatic life AWQCs) at 19 mills exceed aquatic life criteria at baseline discharge levels (up to 25 total exceedances). The final BAT/PSES for the papergrade sulfite and Bleached Papergrade Kraft and Soda subcategories are projected to reduce these exceedances to one pollutant (TCDD) at six mills (six total exceedances). On average, the selected BAT/PSES will reduce color of effluent by approximately 2.5 percent compared to current discharges. This color reduction may have some aquatic life or recreational benefits depending on the natural color of the receiving water, but they are not quantifiable or monetizable at this time.

c. Monetization of Water Quality Benefits. Monetized benefits of the final BAT/PSES for mills in the Bleached Papergrade Kraft and Soda and Papergrade Sulfite subcategories are presented in Table VIII–6. EPA has monetized the human health benefits resulting from elimination of 0.73 to 2.41 cancer cases per year for the nation as a whole (see Section VIII.F.2.b.(1)). The projected benefits range from $2 million to $22 million.

EPA estimates the value to anglers of contaminant-free fisheries as a result of lifting 16 of the 19 dioxin/furan-related fish consumption advisories to be $2 million to $19 million. (Because these values are based on a benefits transfer from a study of contamination of the Great Lakes trout and salmon fishery, which may differ greatly from some of the areas affected by this rule, these values provide only a general sense of the magnitude of the benefits of the rule.) Because non-dioxin/furan fish consumption advisories (PCBs and mercury) will remain in place on three streams, EPA did not monetize the benefits of removing the dioxin/furan fish consumption advisories on these streams. EPA also estimates that recreational fishing would increase on the 16 streams by 115,000 angling days to 379,000 angling days post-compliance. However, the monetary value of this increase is not estimated because of the difficulty of determining the extent to which this increased participation reflects a net increase in fishing activity or merely a shift from other locations (see the Economic Analysis, DCN 14649, Chapter 4).

Because of dioxin/furan removals due to compliance with BAT limitations and PSES, sludge from pulp and paper mills may be disposed of through land application, instead of more costly landfilling or incineration. (Pursuant to a January 1994 Memorandum of Agreement between EPA and the American Forest and Paper Association (AF&PA), a maximum dioxin/furan concentration of 50 ppt is allowed for land application of sludge or a sludge-derived product. See DCN 14399). Mill sludge disposal costs could be expected to decline by $8 million to $16 million. EPA estimated these values based on the reduced tonnage of expected dioxin/furan-contaminated sludge, which in turn was based on the proportional reduction of dioxin/furan in effluent (see the Economic Analysis, DCN 14649, Chapter 8).

Total monetized water-related benefits for all the above categories range from $12 million to $57 million.

As noted previously, the above estimates do not include the benefits that have been identified but not monetized, such as health effects for Native American subsistence fishermen, reduction in AWQC exceedances, reduction of projected non-cancer effects and improvements in fish and wildlife habitat.

TABLE VIII–6.—MONETIZED WATER QUALITY BENEFITS OF FINAL BAT/PSES FOR BLEACHED PAPERGRADE KRAFT AND SODA AND PAPERGRADE SULFITE MILLS

Benefit category	Final BAT/PSES (millions 1995$)
Water-related Benefits	
Human health (recreational fish consumption)	$2–$22
Recreational angling	
"Contaminant-free" fishery	$2–$19
Increased participation	+
Reduced Sludge Disposal Costs	$8–$16
Total Water-related Benefits	$12–$57

+ Positive benefits expected but not estimated.

H. Comparison of Costs and Benefits

This section provides the individual and combined costs, economic impacts, and benefits of the proposed and final CAA and CWA pulp and paper regulations described in earlier sections. See Table VIII–7. The costs and benefits of the CAA (MACT) rules apply to all 155 kraft, soda, sulfite and semi-chemical mills subject to final or proposed MACT requirements, while the costs and benefits for the final CWA (BAT/PSES) regulations apply to the 96 mills in the Papergrade Sulfite and Bleached Papergrade Kraft and Soda subcategories.

Using the pre-tax annualized cost estimates reported in Section VIII.C, net monetized air-related benefits are estimated to range between net costs of $1,165 million to net benefits of $929 million per year for the final MACT I rule considered in combination with the pre-tax annualized cost estimates for the final BAT/PSES. Pre-tax annualized cost estimates are used as a proxy for the social costs of the rules. Net benefits of the proposed regulatory alternative for MACT II are $270 million to $352 million. Thus, the range of net benefits (disbenefits) of the final and proposed air quality standards is ($896) million to $1,281 million.

EPA did not estimate annual net benefits for the final BAT/PSES for the Papergrade Sulfite and Bleached Papergrade Kraft and Soda subcategories because so many categories of benefits are unmonetized that the comparison would be misleading.

TABLE VIII–7.—SUMMARY OF COSTS, ECONOMIC IMPACTS AND BENEFITS

	MACT I	MACT II	Combined air rules	Final BAT/PSES	MACT I and final BAT/PSES (96 mills)	MACT I, MACT II, and final BAT/PSES (96 mills)	MACT I, MACT II, and final BAT/PSES (155 mills)
Capital Costs	$501	$258	$759	$1,039	$1,394	$1,524	$1,799
Pre-Tax Annualized Costs *	$125	$32	$157	$263	$351	$366	$420
Monetized Annual Benefits	($1,040)–$1,054	$302–$384	($739)–$1,438	$12–$57	($1,028)–$1,111	NE	($727)–$1,495
Net Annual Benefits (Benefits-Costs)	($1,165)–$929	$270–$352	($896)–$1,281	NE	NE	NE	NE
Projected Mill Closures	0	0	1	1	2	3	3
Potential Job Losses (due to mill closures)	0	0	ND	ND	900	ND	ND
Projected Firm Failures	0	0	0	0	0	0	0

* Pre-tax costs are greater than the post-tax annualized costs shown in Tables VIII–1 and VIII–3.
Net costs (where costs exceed benefits) are shown in parentheses.
NE = not estimated.
ND = not disclosed to protect confidentiality.
Figures in table reflect rounding.

I. Costs and Benefits of Rejected Options for the Bleached Papergrade Kraft and Soda Subcategory—Option B and TCF

1. Air Benefits

As noted in Section VIII.F.1, the oxygen delignification technology used as a component of Option B and TCF increases emissions of certain pollutants and, hence compliance costs to meet MACT I standards; the implementation of additional MACT controls, however, also increases MACT-related removals. As a result, both MACT I costs and benefits increase where oxygen delignification is utilized. (As noted above, only VOC, PM, and SO_2 benefits are monetized here.) However, because the MACT I technologies control all of the increased emissions associated with oxygen delignification, there is no increased net benefit of the CWA and CAA technologies to ambient air quality. Rather, the net monetized benefits of MACT I in combination with Option B or TCF are equivalent to the monetized benefits of MACT I in combination with the final BAT/PSES. Thus, MACT I benefits associated with reducing VOCs under either Option B or TCF range from $29 million to $1,050 million. MACT II VOC reduction benefits range from $2 million to $84 million. Therefore, total monetized VOC benefits of the air quality standards under either Option B or TCF are $31 million to $1,134 million. PM related disbenefits for MACT I are $1 million, while MACT II PM benefits are $300 million for a total PM benefit of approximately $299 million, for either Option B or TCF. SO_2 related disbenefits for MACT I are from $1,043 million down to $0, while MACT II SO_2 benefits are from $0.1 to $0.3 million.

Total monetized benefits (disbenefits) for MACT I are ($1,015) million to $1,049 million under BAT/PSES Option

B or TCF (see the Economic Analysis, DCN 14649, Chapter 8). Aggregate annual benefits attributed to MACT II range in value from $302 million to $384 million. Combining the benefits of the final and proposed air quality standards yields a range of total annual air quality benefits (damages) from ($713) million to $1,433 million.

2. Water Benefits

The water quality benefits described in this section include benefits for rejected BAT/PSES options for the Bleached Papergrade Kraft and Soda subcategory in combination with benefits for the selected BAT/PSES for the Papergrade Sulfite subcategory. (Benefits for the two CWA subcategories were also combined in Section VIII.G.2 for the selected BAT/PSES.) EPA estimated the human health benefits that could be expected if either of the rejected BAT/PSES options for the Bleached Papergrade Kraft and Soda subcategory—Option B or TCF—were implemented. For combined recreational and (non-Native American) subsistence angler populations using the same fish consumption rates EPA used for the selected BAT/PSES, Option B is projected to eliminate approximately 0.75 to 2.50 annual cancer cases from the baseline of 0.83 to 2.76 annual cancer cases projected to result from the mills' discharges at [mid-1995] levels, leaving a residual of 0.08 to 0.26 excess cancer cases per year. Here, as in Section VIII.G.2.b(1), excess cancer cases refers to cancer cases attributable solely to pulp and paper dioxin/furan discharges. This represents a reduction of 90 percent from baseline. The monetized value of this reduction is $2 to $23 million. TCF is projected to result in a reduction from the mid-1995 discharge baseline of 0.83 to 2.76 cases to 0.0 cases, which increases the benefits from TCF by $0.1 million to $2.7 million, compared to Option B. Because chlorine or chlorinated compounds are not used for bleaching, no dioxin formation was attributed to the mills under this option. Although some background dioxin cancer risk would remain that is attributable to sources other than current pulp and paper discharges, no residual cancer risk would remain from bleached papergrade kraft and soda mills.

For Native American subsistence fishermen, EPA evaluated cancer risks at baseline and under Option B. To estimate the maximum potential risk, EPA assumed that the entire population of the tribes with treaty-ceded fishing rights near pulp and paper mills would consume an average of 70g/person/day of TCDD/TCDF contaminated fish. With this level of consumption, the projected increased number of cancer cases for this population at baseline would be 0.14 cancer cases/year. EPA estimates that this number would decline to 0.007 cancer cases/year if BAT/PSES based on Option B were promulgated and to 0.0 cases/year if BAT/PSES based on TCF were promulgated.

Both Option B and TCF would result in the removal of 19 dioxin/furan-related fish consumption advisories on streams downstream from bleached papergrade kraft and soda mills. EPA estimates that non-dioxin advisories will remain on three of those streams. Therefore, here as in Section VIII.G.2.c, EPA did not monetize the benefits of removing the dioxin/furan fish consumption advisories on these streams. EPA estimates the value to anglers of the 16 "contaminant-free" fisheries as a result of removing these advisories to be $2 million to $19 million. EPA also estimates that recreational fishing would increase on these 16 streams by an estimated 115,000 angling days to 379,000 angling days post-compliance. However, the monetary value of this increase is not estimated because of the difficulty of determining the extent to which this increased participation reflects a net increase in fishing activity or merely a shift from other locations. These results are the same as those presented for the selected BAT/PSES. Because of dioxin removals, sludge disposal costs for both Option B and TCF could be expected to decline by $8 million to $16 million (see the Economic Analysis, DCN 14649, Chapter 8).

With respect to non-cancer human health benefits, none of the four pollutants with RfDs is estimated to exceed a non-cancer hazard quotient of 1.0 under baseline or under conditions associated with rejected Option B for recreational, subsistence, or Native American subsistence anglers. The same is true for the selected BAT/PSES. Similarly, Option B would reduce projected health-based AWQC exceedances to one facility for one pollutant (pentachlorophenol). Under TCF, EPA estimates that there would be no exceedances of health-based AWQCs. For dioxin, EPA estimates that Option B would reduce incremental exposure from fish consumption to a level that is not significantly different from ambient background exposure. Under TCF, chlorine and chlorinated compounds are not used for bleaching, and therefore no dioxin was attributed to mills under this option.

With respect to aquatic life benefits, EPA's modeling results show that, for the four pollutants exceeding chronic aquatic life criteria at 19 mills (up to 25 total exceedances), rejected Option B would reduce these exceedences to one pollutant (TCDD) at three mills (three total exceedences). TCF would reduce these exceedances to zero.

In addition to the benefits of reducing dioxin in fish, EPA investigated other potential benefits associated with Option B and TCF, including color, COD, AOX, and chronic sub-lethal toxicity.

Increased color in a receiving water can decrease light penetration there, thus resulting in shifts of phytoplankton community structure to undesirable species, reduced primary productivity (which can alter the trophic structure of fish communities), and elevated receiving stream temperatures. However, the actual impact on the receiving water of reducing color in mill effluent is highly site-specific and depends in particular on the natural color of the receiving water and other factors. Therefore, the monetized benefits will also be site-specific, to the extent that they can be determined at all. EPA is not promulgating national technology-based limitations or standards for color, but rather has determined that the potential aesthetic or aquatic impacts are best addressed on a site-specific basis by the permitting or pretreatment authority where necessary. See Section VI.B.3.e. Indeed, EPA notes that about eight mills currently have limitations for color in their NPDES permits, and an additional two mills have current color monitoring requirements where stream water quality requires such measures.

Lowering COD can protect the receiving water against oxygen depletion and is likely to reduce non-chlorinated organic compounds that cause chronic sub-lethal effects on aquatic life. Evidence indicates that this toxicity is associated at least in part with families of non-chlorinated organic materials. Several studies indicate that, as wastewater COD is reduced, indices of these chronic toxicity effects also are reduced. EPA is deferring regulation of COD to the individual permitting process for the time being, although EPA intends to promulgate effluent limitations guidelines and standards for COD for Subpart B mills in the future. See Section VI.B.3.d.

Although a statistically significant relationship between AOX and adverse environmental effects has not been established, EPA believes that reduction of AOX (a valid measure of the total chlorinated organic matter) will result in water quality benefits. See Section VI.B.3.c. However, these cannot be quantified at this time.

Compared to current discharges, the incremental benefits associated with OD (Option B) include: reduction of color (by 40 percent); COD (by 40 percent); AOX (by 84 percent); and chronic sub-lethal aquatic toxicity. TCF would also reduce color discharges (by 40 percent), COD (by 40 percent), AOX (by 96 percent) and chronic sub-lethal aquatic toxicity. The water quality benefits of the rejected options are shown in Table VIII–8.

TABLE VIII–8.—MONETIZED WATER QUALITY BENEFITS OF REJECTED BAT/PSES OPTIONS FOR BLEACHED PAPERGRADE KRAFT AND SODA & PAPERGRADE SULFITE MILLS

Benefit category	Option B (millions 1995$)	TCF (millions 1995$)
Water-related Benefits		
Human health (Recreational fish consumption)	$2–$23	$2–$25
Recreational angling		
"Contaminant-free" fishery	$2–$19	$2–$19
Increased participation	+	+
Reduced Sludge Disposal Costs	$8–$16	$8–$16
Total Monetized Water-related Benefits	$12–$58	$12–$60

+ Positive benefits expected but not estimated.

Combined annual air and water benefits related to Option B for all 155 mills regulated by today's rule, including final MACT I, proposed MACT II and BAT/PSES based on Option B, would total ($701) million to $1,491 million. Combined annual air and water benefits related to TCF, including final MACT I, proposed MACT II and BAT/PSES based on TCF would total ($701) million to $1,493 million.

J. Benefit-Cost Comparison Using Case Studies

Many benefits are highly site-specific. At proposal, EPA estimated the costs and benefits of the pulp and paper rule at three sites using a case study approach. EPA has expanded the case study analysis to incorporate additional sites. The case studies focus on water quality benefits, resulting from installation of BAT/PSES technologies, with air quality benefits modeled for case study mills as they are at the national level (see Section VIII.G.1, above). The three case studies at proposal were (1) the Penobscot River in Maine, (2) the Wisconsin River in central Wisconsin, and (3) the lower Columbia River in Washington and Oregon. In addition, a qualitative retrospective case study was conducted of the Leaf River in Mississippi. These case studies were selected to provide geographic representation of the impacts of the proposed rule, taking data availability into consideration.

For the final rule, the three quantitative case studies were updated to reflect EPA's revised analysis of costs, loadings, and human health risks to sport anglers. In consideration of environmental justice, EPA also evaluated health risks to Native American anglers in the Penobscot and Columbia River case study areas.

The four new case studies of monetized benefits analyze: (4) the Lower Tombigbee and Mobile River watersheds in Alabama, (5) the Pigeon River in North Carolina, (6) the Samoa Peninsula in California, and (7) the upper Columbia River in Washington State and British Columbia, Canada. These new case studies provide EPA with the first real empirical evidence of already-realized benefits that can be expected from adoption of the final BAT/PSES limits. Although a portion of the water-related benefits estimates in these newer case studies are based on actual outcomes from installing pollution control equipment (i.e., a retrospective analysis), estimates of the benefits of MACT standards in these case studies are prospective, based on expected future benefits.

The case studies compare costs and benefits at specific bleached papergrade kraft and soda mills in these seven areas across the country, some of which have not installed technologies comparable to the bases for BAT/PSES and some of which have installed such technologies, thereby allowing the retrospective assessment of BAT/PSES costs and benefits. Where mills have installed BAT-like technologies, capital investments may include: 70 percent to 100 percent substitution; oxygen delignification plus 100 percent substitution; and/or totally chlorine-free technologies.

EPA evaluated control cost estimates and air benefits for emission controls necessary to meet the MACT I and II standards on a prospective basis, assuming the level of controls currently existing at mills in the case study areas as a baseline.

As with the national-level analysis, significant water-related benefits are derived from removal of dioxin/furan from fish, and air-related benefits from improved agriculture and health from reduced ozone emissions. However, the case studies also address a wider range of water-related benefits, including some site-specific recreational benefits such as surfing, boating, white water rafting, non-consumptive uses and non-use benefits that result from improved color in the receiving water, improved odor and removal of health advisories. The case studies provide a more complete picture of the range of water-related benefits that may be expected from the rule, although a number of identifiable benefits, including improvements in ecological conditions and reductions of non-cancer health effects remain unquantified and unmonetized.

Benefits and costs for the case studies are summarized and compared in Table VIII–9. The monetized benefits range from two percent to 387 percent of BAT/PSES compliance costs. The case study results indicate that monetized benefits may be of the same order of magnitude as costs at individual sites.

From a water quality perspective, the case studies provide a cross-section of mills and receiving waters nationwide, including fast- and slow-moving streams, lakes and ocean waters.

Using receiving water and population characteristics, EPA attributed benefits from the case study sites to all bleached papergrade kraft and soda and papergrade sulfite mills. As a sensitivity analysis, EPA used the water quality benefits from the case studies to estimate the national level water quality benefits of the integrated final and proposed rule for the Bleached Papergrade Kraft and Soda and Papergrade Sulfite subcategories. Based on the case studies, monetized benefits from the water rules (Option A) would be expected to range from $91 million to $451 million per year, or from 35

percent to 170 percent of water-related costs.

The case studies were not selected to be, and are not necessarily, representative of national benefits with respect to air quality.

TABLE VIII–9.—COMPARISON OF POTENTIAL ANNUAL BENEFITS TO POTENTIAL ANNUALIZED COSTS FOR SEVEN CASE STUDY SITES

[Millions of 1995 dollars]

Site	Water-related benefits	Air-related benefits [b]		Total monetized benefits	Total compliance costs [a]
		MACT I	MACT II		
ORIGINAL CASE STUDIES					
Penobscot River	$0.7–$2.3	($9.5)–7.7	$0.1	($8.7)–10.1	([c])
Wisconsin River	$0.1–$1.5	($16.9)–15.6	$2.1	($14.7)–19.2	$9.3
Lower Columbia River	$1.5–$8.6	($26.9)–56.2	$0.7	($24.7)–65.5	$16.6
NEWER CASE STUDIES					
Lower Tombigbee and Mobile Rivers	$1.1–$12.0	($136.8)–113.2	$81.7	($54.0)–$206.9	$32.5
Pigeon River	$2.7–$8.7	($5.8)–$5.7	$2.1	($1.0)–$16.5	[c] $7.1
Samoa Peninsula	$0.1–$1.4	($5.0)–10.1	$0.0	($4.9)–$11.5	[d] $5.0
Upper Columbia River/Lake Roosevelt	$1.5–$11.6	NA	NA	$1.5–$11.6	$3.0

[a] The total compliance costs shown in this Table (for BAT/PSES, MACT I and proposed MACT II Option #1) differ from compliance costs used to determine economic achievability. The cost estimates for the case studies were based on custom analysis of technology in-place corresponding to the case study timeframes. In contrast, estimates used to determine economic achievability used a standard mid-1995 baseline for technology in-place

[b] Based on implementation of technologies consistent with Option A.

[c] Confidentiality agreements preclude disclosure of total costs for this site.

[d] This mill has indicated EPA's cost estimate is too high because EPA did not fully account for technology in-place.

NA = Not applicable.

IX. Incentives for Further Environmental Improvements

A. The Voluntary Advanced Technology Incentives Program

1. Introduction

EPA is promulgating BAT limitations today that will achieve significant pollutant reductions using technologies within the economic capability of the subcategory as a whole. At the same time, EPA wants to encourage the widespread use and perfection of technologies such as extended delignification and to promote the development of even more advanced technologies, such as those aimed at reducing bleach plant flow. EPA also wants to encourage the widespread use and perfection of TCF processes. These technologies and processes have the ability to surpass the environmental protection that would be provided by compliance with the baseline BAT. Indeed, EPA's vision of long-term environmental goals for the pulp and paper industry includes continuing research and progress toward such environmental improvement. The Agency believes that individual mills can be encouraged to make substantial environmental progress beyond the base level compelled by law. This industry's participation in the 33/50 program, its progress toward reducing toxic discharges in advance of the proposed BAT revisions, its joint initiative with the U.S. Department of Energy to reduce future energy demands, and its development and implementation of the Sustainable Forestry Initiative, among other voluntary environmental undertakings, indicate that an incentives program may be widely accepted and utilized by individual mills.

For this reason, EPA is establishing a Voluntary Advanced Technology Incentives Program to encourage mills in the Bleached Papergrade Kraft and Soda subcategory to move beyond today's baseline BAT technologies toward the "mill of the future," which EPA believes will have a minimum impact on the environment. EPA also intends the program to serve as a pilot program for determining the effectiveness of regulatory incentives as a means of stimulating development of environmentally beneficial technologies. As a result of the Voluntary Advanced Technology Incentives Program, EPA hopes to achieve within sixteen years greater pollutant reductions than it could achieve solely by establishing a technological floor. Indeed, the development of increasingly more advanced bleach plant process technologies is a critical step toward the Clean Water Act's ultimate goal of eliminating the discharge of pollutants into the Nation's waters. See CWA Section 101(a)(1).

The BAT program under the Clean Water Act is widely and justifiably applauded as a critical tool in forcing the development and installation of environmentally beneficial technologies. The statute demands progress toward the goal of eliminating the discharge of all pollutants, CWA Section 301(b)(2)(A), but emphasizes that that progress must be "reasonable." *Id.* This Voluntary Advanced Technology Incentives Program marries the twin objectives embodied in Section 301(b)(2)(A): compelling the industry to go as far as it reasonably can go, through the achievement of limits that are technically and economically achievable, while holding out through the Voluntary Advanced Technology Incentives Program an array of alternative effluent limits that EPA believes will lead to zero discharge. The baseline BAT limitations discharge EPA's statutory mandate: to promulgate limitations based on the best available technology economically achievable. The Voluntary Advanced Technology Incentives Program, in turn, promotes EPA's statutory goal: to establish limitations that act as a beacon to show what is possible.

EPA is codifying three tiers of Voluntary Advanced Technology BAT effluent limitations and two tiers of Voluntary Advanced Technology NSPS, which together form the backbone of the Voluntary Advanced Technology Incentives Program for mills in the Bleached Papergrade Kraft and Soda subcategory. The three BAT tiers are

labeled Tier I, Tier II and Tier III; the two NSPS tiers are labeled Tier II and Tier III. Tier III is the most stringent of the tiers. Each BAT tier is made up of an array of increasingly more stringent enforceable effluent limitations, culminating in the ultimate performance requirements for that particular tier. The NSPS tiers consist entirely of the ultimate performance requirements for each tier. In addition to the Voluntary Advanced Technology effluent limitations and NSPS codified today, EPA has also assembled a number of incentives relating to permitting and enforcement matters and public recognition. EPA hopes these incentives will encourage many mills to develop and install advanced and even innovative technologies that will lead the industry as a whole toward the elimination of pollutant discharges.

EPA believes it is appropriate as a matter of policy to offer mills incentives to reach beyond the baseline BAT and NSPS process technologies. Capital costs associated with the Tier I technology are substantially greater than the capital costs of Option A, which is the technology basis for the baseline BAT limits. Although over ten years a mill employing Tier I technologies will likely save money in operating costs, the capital outlay involved may discourage mills from doing more than the regulatory minimum. For Tiers II and III, the costs and risks are even more acute, when one considers the cost of research, development, and full scale commercial trials of technologies in the early stages of development and implementation, as well as the associated uncertainties concerning possible product impacts. EPA is interested in encouraging research, development and installation of emerging technologies in order to motivate the development of these technologies for broader commercial applications. As these technologies become proven and their efficiencies publicized, EPA hopes that they will become—in effect if not as a matter of law—the industry floor. Thus, EPA believes it is in the public interest to encourage mills today to develop environmentally beneficial technology and to reward mills that are innovative and forward-looking in their use of new and more environmentally effective technology despite its greater cost.

EPA received suggestions for an incentives program from a number of stakeholders. From these and other stakeholder suggestions, EPA has developed a program, presented below, that is intended to provide incentives for further long term environmental improvements. EPA is incorporating several types of incentives in this program. In addition, because mill-specific factors, including product specifications and existing equipment, will affect the technical approach taken and the environmental goal attainable by an individual mill, EPA is establishing several tiers of Advanced Technology performance objectives, each with limitations and standards specific to the model technology EPA is positing. In order to promote ambitious use of Advanced Technologies, EPA is offering greater incentives for greater reductions in pollutant discharge.

EPA recognizes that some mills in the Bleached Papergrade Kraft and Soda subcategory have already installed or have committed to install Advanced Technologies that are achieving or have the potential to achieve effluent limitations equivalent to the ultimate performance requirements of one or more of the Voluntary Advanced Technology Incentive Tiers. If these mills accept enforceable NPDES permit limitations at one of the Tier levels, they will qualify for the incentives program at that level. In some instances, therefore, the incentives will actually serve as rewards for effluent reductions already achieved.

2. Mechanics of the Incentives Program

The Voluntary Advanced Technology Incentives Program for the Bleached Papergrade Kraft and Soda subcategory will supplement the otherwise compulsory baseline BAT and NSPS program. EPA emphasizes that the Voluntary Advanced Technology Incentives Program is entirely voluntary; no mill in Subpart B is required to participate. Rather, mills subject to the baseline BAT limits and NSPS contained in Subpart B may enroll in the incentives program and thus subject themselves to more stringent technology-based limitations corresponding to the Incentives Tier they select. For example, a mill that determines that it can achieve Tier II limits may designate itself as a BAT Tier II mill. A mill with more than one fiber line subject to Subpart B may choose to enroll all or some of its fiber lines in the Voluntary Advanced Technology Incentives Program. A mill wishing to experiment with advanced or even innovative bleaching technologies also may choose different Tiers for different fiber lines. After the mill enrolls in the Voluntary Advanced Technology Incentives Program, the permit writer must place the corresponding BAT limitations in the mill's permit. Achievement of the Advanced Technology BAT limitations thereafter would be compulsory for that mill. A mill that chooses not to participate in the program will receive the baseline BAT limitations or NSPS; similarly, a mill that chooses to enroll some but not all of its Subpart B fiber lines in the Voluntary Advanced Technology Incentives Program will receive baseline BAT limitations or NSPS for its non-participating fiber lines.

EPA expects that an interested mill would formally enroll in the Voluntary Advanced Technology Incentives Program prior to issuance of its next NPDES discharge permit. Enrollment can be made by indicating the mill's intent on its permit application or through separate correspondence to the permitting authority as long as the signatory requirements of 40 CFR 122.22 are met. However, as discussed in more detail in Section IX.A.7 below, EPA assumes that most mills, for practical purposes, will decide whether to participate in the Voluntary Advanced Technology Incentives Program in the next year in order to assure that they will have the maximum amount of time to achieve the various Tier limitations and to receive the additional compliance time for MACT, established under these rules for mills enrolled in the Voluntary Advanced Technology Incentives Program. Any mill can voluntarily enter at any tier appropriate to its individual circumstances. Further, mills that enter either at Tier I or Tier II may decide, after making such a commitment in permits but before termination of the appropriate compliance period (i.e., not later than six years after publication of these rules—Tier I, or not later than 11 years after publication of these rules—Tier II), to commit to the requirements of a more stringent tier (i.e., Tier II or Tier III). Such mills will be subject to the deadlines specified in the regulation for the newly chosen tier.

Existing dischargers volunteering to participate in the incentives program would receive BAT limitations that become progressively more stringent over time. Although applied in stages, the limitations represent a continuum of progress that a participating mill commits, and is required, to achieve. At the first stage in the continuum are limitations for the enrolled fiber line that reflect either a mill's existing effluent quality or its current technology-based permit limits for the BAT parameters, whichever are more stringent. See 40 CFR 430.24(b)(1). For the bleach plant parameters, such as dioxin, existing effluent quality would be determined at the bleach plant, while existing effluent quality for AOX would be determined at the end of the pipe based on loadings attributable to that

fiber line. *Id.* The next stage in the continuum consists of enforceable interim milestones. Under one set of milestones, existing dischargers enrolled in Tiers II or III are required to meet interim BAT limitations equivalent to the baseline BAT limitations by April 15, 2004. 40 CFR 430.24(b)(3). (By that date, dischargers enrolled are required to meet the baseline BAT limitations for all pollutants, except for Tier I; the AOX limitation for mills enrolled in Tier I is the ultimate performance requirement for Tier I. *Id.*) Under the second set of milestones, existing dischargers enrolled in any tier are required to meet enforceable requirements determined by the permitting authority based on best professional judgment; these milestones would be expressed as narrative or numeric conditions in the mill's NPDES permit. 40 CFR 430.24(b)(2). EPA intends the milestones to reflect each step in a mill's progress toward achievement of the Tier's ultimate performance requirements. Elsewhere in today's **Federal Register**, EPA is proposing to require each participating mill to submit to its permitting authority a plan detailing the steps it plans to take (with corresponding dates) in order to meet its applicable BAT Tier limitations. Under the proposed regulation, permit writers would be authorized to use the information in the milestone plan as a basis for setting milestone limitations. The final stage in the BAT continuum represents the ultimate Advanced Technology performance levels for the Tier selected. 40 CFR 430.24(b)(4)(i). As noted above, the Voluntary Advanced Technology Incentives Program is also available for new sources that elect to exceed baseline NSPS requirements. See 40 CFR 430.25(c). For new sources (as defined at 430.01(j)), the incentives program begins at Tier II. The ultimate Tier II and Tier III performance requirements constitute NSPS for such mills, with the addition of standards for conventional pollutants at the baseline NSPS level. See 40 CFR 430.25(c)(1) and (2). The NSPS Tier II and Tier III performance requirements are the same as the ultimate BAT Tier II and Tier III performance requirements for BAT. As required by CWA Section 306, new sources must comply with the applicable NSPS upon commencing operation; therefore, the incremental approach of achieving progressively more stringent performance levels discussed above for existing sources would not apply to new sources enrolled in the incentives program.

In addition to Voluntary Advanced Technology BAT limitations and NSPS, the NPDES permit of a mill enrolled in the Voluntary Advanced Technology Incentives Program will need to contain all other permit limitations and conditions otherwise applicable to the mill, including any conventional pollutant limitations and standards, any water quality-based effluent limitations required under CWA Section 301(b)(1)(C), and best management practices provisions, including those promulgated today. Schedules for complying with those requirements, if any, are determined by the applicable law; nothing in this incentives program alters in any way those compliance deadlines.

Because mills enrolling in the Voluntary Advanced Technology Incentives Program are subject to more stringent BAT limitations and NSPS than EPA could otherwise compel through national effluent limitations guidelines, EPA has assembled a package of rewards and incentives for participating mills. The public recognition incentive is available as soon as a mill accepts Voluntary Advanced Technology BAT limitations in its NPDES permit. The reduced monitoring incentive applicable to dioxin, furan, chloroform and the 12 chlorinated phenolic pollutants is available as soon as participating mills achieve those limitations. See 40 CFR 430.02(c). The reduced monitoring incentive applicable to AOX is available only after the ultimate Advanced Technology performance level for that pollutant is achieved. See 40 CFR 430.02(d) and (e). The remaining incentives, including greater permit certainty, reduced inspections, and reduced penalties, are available only after the mill achieves all of the ultimate Advanced Technology performance levels.

EPA has decided not to make the Voluntary Advanced Technology Incentives Program available to indirect discharges at this time because it would be much more difficult to administer than the baseline PSES program and therefore would impose substantial burden on local governments. Further, EPA does not believe that commitments by indirect dischargers to reduce AOX or flow levels warrants any delay in compliance with limitations on dioxin and furan due to POTW pass-through and biosolids contamination concerns. Similarly, EPA has not identified feasible technologies beyond BAT that can significantly reduce pollutant discharges from mills in the Papergrade Sulfite subcategory at this time, and so is not able to develop an incentives program for this subcategory. Moreover, stakeholders have offered no specific suggestions or supporting information and data upon which EPA reasonably could develop a program for the Papergrade Sulfite subcategory. However, EPA will consider developing incentive programs for other subcategories as BAT limitations are promulgated for those subcategories.

3. The Technology Bases for the Voluntary Advanced Technology BAT Limitations and NSPS

In order to determine the appropriate Voluntary Advanced Technology BAT limitations and NSPS, EPA first selected a model technology for each Tier. For Tier I, which applies only to BAT, EPA determined that the most appropriate technology was extended delignification with complete substitution of chlorine dioxide for elemental chlorine, closing up wastewater discharges from the fiber line prior to bleaching, and efficient biological wastewater treatment. EPA selected this technology basis because it is available today (see discussion of BAT Option B and NSPS technology in Section VI.B.5.(a) and (b)), because it is economically achievable for mills voluntarily choosing to implement it (see Section IX.A.6), and because it represents an important step in the direction of a minimum impact mill.

The model technology for Tier II Voluntary Advanced Technology BAT limitations and NSPS consists of extended delignification with complete substitution of chlorine dioxide for elemental chlorine, supplemented with increased use of water conservation practices, water reuse practices, bleach plant filtrate recycling practices, and efficient biological wastewater treatment. EPA anticipates that Tier II mills will maximize the capability of extended delignification technology, thereby reducing the amount of chlorine dioxide used in bleaching. The model Tier II mill also will have highly effective pulping liquor spill prevention and control and will have evaporators that minimize the amount of black liquor carryover, to allow for extensive condensate reuse. EPA expects that Tier II mills also will employ a closed fiber line prior to bleaching improved water reuse within the bleach plant, and will recycle a portion of bleach plant filtrate back through the fiber line to the recovery cycle. The Tier II Advanced Technology BAT limitations and NSPS represent the performance demonstrated by mills that minimize effluent flow and reduce the formation of chlorinated organic compounds using these technologies and practices. Three mills in the United States are approaching the reduced wastewater flow levels equivalent to Tier II, which leads EPA

to conclude that flow reduction technologies are emerging. Although the flow volume projected or reported by these mills excludes pulping area or evaporator condensates, which EPA includes within its Tier II flow limitation, EPA expects that over the next ten or eleven years condensate reuse strategies and discharge flow reduction technologies will mature to allow mills to achieve the pulping area condensate, evaporator condensate and bleach plant wastewater flow level being codified today as part of Tier II. For further discussion of EPA's rationale for selecting this technology as the basis for Voluntary Advanced Technology BAT limitations and NSPS at the Tier II level, see Section IX.A.6.

The model technology for the Tier III Voluntary Advanced Technology BAT limitations and NSPS represents what EPA believes can be achieved in 15 or 16 years by mills on the cutting edge of minimum effluent technology. In EPA's view, such mills will fully reuse pulping area and evaporator system condensates, have a closed fiber line prior to bleaching, and recycle the majority of bleach plant filtrates back to the recovery cycle. EPA expects that these mills will also operate efficient biological treatment systems. To achieve this degree of mill closure, in addition to the level of technology described under Tier II, EPA expects the model Tier III mill will have "kidney" technology to remove metals from bleach filtrate and chloride from the mill liquor cycle, and may perform extensive steam stripping or other treatment of condensates to allow for full reuse. Mills that choose to use ozone delignification may avoid the need for a chloride removal system. EPA also expects that the Tier III mills will have advanced process control systems and negligible losses of black liquor through leaks and spills. Finally, the model Tier III mill will likely have extended liquid storage capacity as part of its water recycle and liquor management systems to help maintain the good hydraulic balance required for low discharge flow operation. While no U.S. mill today is achieving these limitations, EPA believes that the continuing progress being made by mills toward closed-loop processing will lead to greater innovation regarding technologies and practices necessary to achieve the Tier III limitations. For further discussion of EPA's rationale for selecting this technology as the basis for Voluntary Advanced Technology BAT limitations and NSPS at the Tier III level, see Section IX.A.6. For a more detailed discussion of the technology bases for the Voluntary Advanced Technology BAT Limitations and NSPS, see Voluntary Advanced Technology Incentives Program Technical Support Document (DCN 14488).

4. Pollutants Regulated by Voluntary Advanced Technology BAT and NSPS Limitations

Except for TCF-based processes, each Advanced Technology tier consists of limitations for dioxin, furan, chloroform, and 12 chlorinated phenolic pollutants monitored at the bleach plant. EPA is not codifying limits for these pollutants for TCF processes. As discussed in more detail below, each Tier also includes AOX limitations monitored at the end of the pipe and, depending on the Tier, limitations on lignin content or wastewater flow. In addition, each BAT Tier includes limitations on pentachlorophenol and trichlorophenol (when used as biocides), see 40 CFR 430.24(d), and each NSPS Tier includes limitations on BOD_5, TSS and pH, as well as biocides. See 40 CFR 430.25(c) and (d).

EPA has chosen to use AOX as a performance standard for each of the three Voluntary Advanced Technology BAT tiers because AOX is a measure of progress in reducing the total chlorinated organic matter in wastewaters resulting from the bleaching of pulps. In addition, the use of AOX rather than other measures of organic matter (e.g., BOD_5) will further encourage a pollution prevention approach instead of end-of-pipe treatment technologies. The final rule establishes minimum monitoring frequencies for AOX for each of the Tiers, except for TCF fiber lines. See 40 CFR 430.02(d) and (e). For TCF fiber lines, permit writers should determine the appropriate monitoring frequency to assure continued compliance with the AOX limitation.

In addition to the AOX criterion, EPA is establishing BAT limitations requirements for Tier I that include kappa numbers measured prior to bleaching and a narrative limitation calling for recycling of all filtrates generated prior to the point at which that kappa number is measured. See 40 CFR 430.24(b)(4)(i). The kappa number is a measure of lignin content in unbleached pulp, and is routinely determined by mills. EPA is not establishing minimum monitoring requirements for kappa numbers in this regulation. Permit writers maintain the authority to establish monitoring frequencies on a best professional judgment basis.

By meeting the kappa number limitations, Tier I mills will achieve substantial reductions in precursors for chlorinated organic pollutants found in lignin beyond reductions achieved by mills with conventional pulping processes. See DCN 14488. Some industry commenters suggested that EPA simply specify qualifying Advanced Technologies and require participating mills to employ one or more of those technologies in order to receive incentives. EPA rejected this approach because it would inhibit development of equivalent technologies that EPA cannot foresee today and is inconsistent with the traditional performance-based structure of technology-based effluent limitations under the Clean Water Act. Nevertheless, EPA agrees with these commenters that Tier I mills will in all likelihood employ extended delignification technologies or other technologies that similarly reduce the kappa number prior to bleaching; EPA, therefore, is requiring Tier I mills to achieve specified kappa numbers that reflect the performance capabilities of well-operated, extended delignification systems. In addition, EPA's Tier I limits reflect EPA's expectation that Tier I mills will be bleaching pulps with less lignin and, hence, will realize significant reductions in the amount of unrecoverable bleaching chemicals required to achieve their target brightness. By using less bleaching chemical, Tier I mills will further reduce the formation and discharge of chlorinated organic pollutants generated by bleaching pulps with chlorine-containing compounds, including chlorine dioxide. By recycling the pulping area filtrates, Tier I mills also will be implementing an important building block for long-term flow reduction goals, and eliminating an important source of weak black liquor discharge that would otherwise go to the mill's wastewater treatment plant. See DCN 14488.

By defining Tier I with parameter values (AOX, kappa numbers) and recycle requirements as presented above, EPA intends to provide maximum encouragement to as many mills as possible to achieve the performance of at least the initial threshold of the Advanced Technology program. Adopting threshold performance criteria that are too stringent could discourage mills from making additional capital investments beyond those necessary to achieve the baseline BAT. This could undermine one goal of the incentives program, which is to achieve the greatest environmental results possible consistent with mills' capital

investment cycles. Conversely, setting threshold criteria at levels that could be met by some mills that comply only with the baseline BAT limitations and that do not employ Advanced Technologies could serve as a disincentive to invest in Advanced Technologies that achieve dramatic reductions in pollutant loadings and flow. The kappa numbers defined above for Tier I, while at the upper end of the range of values achieved by extended delignification technologies, nonetheless appear to separate mills that employ them from mills that would use conventional pulping technologies to achieve the BAT limitations. See DCN 14488.

EPA is setting the Voluntary Advanced Technology BAT limitations and NSPS for Tier II and Tier III based on a different philosophy than for Tier I. EPA believes that Tiers II and III should reflect a movement toward the long-term goal of minimizing impacts of mills in all environmental media through partially or fully closed loop processes. For Tier II, EPA is setting an AOX limit based on a long-term average (0.10 kg/kkg) that is currently being achieved by some of the best mills in the industry. See DCN 14488. See 40 CFR 430.24(b)(4)(i) and 430.25(c)(2). For Tier III, EPA is setting an AOX limit based on a long-term average (0.05 kg/kkg) that is being achieved by only a very few mills, including one ECF mill. SeDCN 14488. Id. This ECF mill achieved the AOX limit only with hardwood furnish; moreover, it did so without the level of flow reduction anticipated for Tier III. See DCN 14488. It is the Agency's judgment, based on trends in ECF technology development to date, that with recycle of pulping and evaporator condensates and bleach plant filtrates necessary to achieve a wastewater flow of 5 m^3/kkg, and removal of chlorides from the liquor cycle, commensurate reductions in the mass of chlorinated organic pollutants contained in wastewaters discharged also are likely to occur. For this reason, it is EPA's judgment that the Tier III AOX limit will be achievable by advanced ECF mills for both hardwood and softwood furnishes as well as advanced TCF mills.

The Tier II and Tier III BAT limitations and NSPS also include restrictions on wastewater flow and a requirement that all pulping-area filtrates be recycled to chemical recovery prior to bleaching. See 40 CFR 430.24(b)(4)(i) and 430.25(c)(2). As discussed above for Tier I, the filtrates recycle requirement is an important step toward long-term flow reduction. Flow reduction and progress toward closed loop mill operations, in turn, are very important long-term environmental goals because pollutant releases to all environmental media would be minimized.

While mills currently measure end-of-pipe flow at the point of permitted discharges, Tier II and Tier III mills will be required to establish and maintain flow measurement equipment to verify compliance with the annual average reduced flow limits for those tiers for bleach plant and pulping area and evaporator condensates. EPA is not establishing minimum monitoring frequencies for flow in this regulation. Permit writers maintain the authority to establish monitoring frequencies on a best professional judgment basis. See 40 CFR 430.02.

Review of currently available data and literature indicates that the numerical values for flow set forth to define Tiers II (10 m^3/kkg) and III (5 m^3/kkg) are appropriately stringent reduced flow targets by comparison to current wastewater flow for mills with extended delignification technologies. See DCN 14488. EPA believes it is appropriate to include condensates as part of the specified wastewater flow volume because technologies are available today that allow for their recycle and reuse; use of these technologies therefore ensures that the cumulative volume of wastewater flow is reduced to the greatest extent possible. See DCN 14488. One technology in particular is the "clean condensate alternative," which is a viable MACT compliance alternative. See 40 CFR 63.447. This alternative facilitates the segregation, treatment, and reuse of condensates and thus will assist mills in achieving the wastewater flow objectives. Inclusion of pulping and evaporator condensates in these reduced flow targets therefore is consistent with the "clean condensate" MACT compliance alternative and will promote flow reduction through recycle and reuse of the greatest possible volume of process wastewater.

EPA has the legal authority to establish Advanced Technology effluent limitations for non-chemical parameters, such as lignin content measurements and flow, and to do so where appropriate in narrative form. For Tier I, these limitations take the form of kappa numbers to measure lignin content in unbleached pulp and a narrative requirement to recycle pulping area filtrates; for Tiers II and III, they take the form of numerical limitations on process wastewater flows, as well as the narrative requirement to recycle pulping area filtrates. EPA has the authority to establish limits for lignin content in unbleached pulp, for recycle of filtrates, and for reduced process wastewater flows because each of these parameters functions as a restriction on the quantities, rates or concentrations of chlorinated organic pollutants and other pollutants in a mill's wastestream. See CWA Section 502(11). Restrictions on lignin content of unbleached pulp, measured as a kappa number, can be used to reduce the presence of precursors for chlorinated organic pollutants in a mill's wastewater. In addition, lignin itself is a material that includes polynuclear aromatic hydrocarbons; a number of polynuclear aromatic hydrocarbons are included in EPA's list of priority pollutants. See Appendix A to Part 403 (reprinted after 40 CFR 423.17). Recycling pulping area filtrates to the chemical recovery cycle prevents the discharge of weak black liquor, which includes inorganic pulping chemicals and dissolved wood substances. The dissolved wood substances include polynuclear aromatic materials, degraded carbohydrates, low-molecular weight organic acids, and wood extractives (resins and fatty acids). The toxicity of the materials contained in black liquor is well documented; see the BMP Technical Support Document (DCN 14489). Limits for process wastewater flow, in this case pertaining to total pulping area and evaporator condensate and bleach plant wastewater, move mills toward closed loop operations. Reductions in flow will have the effect of dramatically reducing mass loadings—and discharges—of non-chlorinated organics such as lignin and a variety of chlorinated organics in addition to dioxin, furan and the chlorinated phenolic pollutants specifically regulated today. Because those pollutants are far too numerous to measure individually (and some have not been specifically isolated and identified), EPA determined that it was impracticable to set mass-based limits for all of those pollutants. See DCN 14488. EPA judged that establishing flow levels for Tiers II and III would be the best way to control the discharge of these pollutants.

For the foregoing reasons, all of these Advanced Technology performance objectives qualify as effluent limitations under CWA section 502(11). As noted above, the filtrates recycle limitation is a narrative limitation. Nothing in the definition of effluent limitation in CWA section 502(11) or elsewhere in the CWA compels that restrictions on the discharge of pollutants be expressed in numeric form. *See NRDC* v. *Costle,* 568 F.2d 1369, 1380 (D.C. Cir. 1977). In this instance, EPA determined that the

restriction on filtrates (and hence the prevention of discharge of toxic materials) could not be expressed as a numeric limitation and therefore expressed that restriction in narrative form instead.

For further discussion of the effluent reductions and environmental benefits associated with the Advanced Technology BAT limitations and standards promulgated for these parameters, see DCN 14488.

5. Voluntary Advanced Technology BAT Limitations and NSPS

The Voluntary Advanced Technology BAT limitations consist of three separate components, which together comprise BAT for the particular Tier. See 40 CFR 430.24(b). The first and third components consist of numeric effluent limitations for the pollutants regulated by the Voluntary Advanced Technology Incentives Program. The second component consists of enforceable interim milestones. Under one set of milestones, existing dischargers enrolled in Tiers II or III are required to meet interim BAT limitations equivalent to the baseline BAT limitations by April 15, 2004. Under the second set of milestones, existing dischargers enrolled in any tier are required to meet enforceable requirements that are developed on a best professional judgment basis by the permitting authority; these milestones are expressed in either narrative or numeric form. Taken together, these three components constitute reasonable further progress toward the national goal of eliminating the discharge of all pollutants and for this reason represent BAT.

The Voluntary Advanced Technology NSPS consist of only one stage—the ultimate performance objectives for the Tier in question, with the addition of conventional limitations at the baseline NSPS level. See 40 CFR 430.25(c). This is because new sources, unlike existing sources subject to BAT, must design and construct their facilities to achieve NSPS upon commencing operation; sequencing limitations to achieve continuing progress would be inconsistent with this statutory mandate.

a. "Stage 1" BAT Limitations. In the regulation, EPA has codified the first set of numeric BAT effluent limitations as "stage 1" limitations to be applied in the absence of more stringent WQBELs. See 40 CFR 430.24(b)(1). Although expressed in this regulation in narrative form, EPA intends that the permitting authority will express that limitation in numeric form for each participating mill on a case-by-case basis. The "stage 1" limitations thus will be numeric values on dioxin, furan, chloroform, AOX, and 12 chlorinated phenolic pollutants that, for each pollutant, are equivalent to the more stringent of either the technology-based limit on that pollutant in the mill's last permit or the mill's current effluent quality with respect to that pollutant. *Id.* Existing effluent quality for AOX would be determined at the end of the pipe based on loadings attributable to that fiber line; for all other pollutants covered by the Advanced Technology BAT limitations, such as dioxin, existing effluent quality would be determined at the point where the wastewater containing those pollutants leaves the bleach plant. *Id.* These "stage 1" BAT limits represent the first step in the Advanced Technology BAT continuum and are enforceable against the participating mill as soon as they are placed in the mill's NPDES permit.

The purpose of the "stage 1" BAT limits is to ensure that, at a minimum, existing effluent quality is maintained while the mill moves toward achieving the ultimate Voluntary Advanced Technology BAT performance requirements for the Tier selected by the mill. As Advanced Technology permits are reissued for Tier II or Tier III mills, in particular, new "stage 1" limitations must be established to reflect the improving effluent quality of that mill. *Id.* Allowing a mill to degrade its effluent quality during development and installation of Advanced Technologies would be inconsistent with the statute's direction that BAT limitations achieve reasonable further progress toward the Clean Water Act's national goals. EPA's "stage 1" limitations, thus, are intended to capture continuously improving effluent quality.

EPA had considered, but rejected, attempting to codify the "stage 1" limits in numeric form. First, EPA has no way on this record to quantify and hence codify the existing effluent quality of each mill that is potentially eligible to participate in this program. Nor would such an attempt be wise, because EPA expects that mills considering participating in the Voluntary Advanced Technology Incentives Program will continue to improve their effluent quality up to and beyond the promulgation date of this regulation and, most likely, up to and beyond the dates that their existing effluent quality is translated into enforceable permit limits. Therefore, even if EPA could codify such "stage 1" limitations today, doing so would likely establish a less stringent technological floor than the permitting authority would be able to establish each time an Advanced Technology permit is issued prior to achievement of the ultimate Advanced Technology performance requirements.

Because the "stage 1" limitations reflect a level of technology that the mill is already employing or that was previously determined to be BAT for that mill, EPA has determined that the technology bases for the "stage 1" limits are both technically available and economically achievable. EPA has also determined that they would not impose any adverse non-water quality environmental impacts. EPA has determined that these "stage 1" limitations are the "best" available technology economically achievable for mills participating in the Voluntary Advanced Technology Incentives Program because they allow those mills to focus their resources on the research, development, testing, and installation of the technologies ultimately needed to achieve the Advanced Technology performance levels. Thus, "stage 1" limitations reflect "reasonable further progress toward the national goal of eliminating the discharge of all pollutants," as called for by CWA section 301(b)(2)(A). EPA also considered all of the other statutory factors specified in CWA section 304(b)(2)(B) and concluded that nothing in EPA's analysis of those factors justifies selecting a different set of "stage 1" BAT limitations. For these reasons, EPA determined that the "stage 1" BAT limitations promulgated today represent the appropriate first rung of the Advanced Technology BAT ladder that participating mills will have committed to ascend.

EPA did not set "stage 1" limits at the baseline BAT level because baseline BAT limits are not a logical first step to meeting the ultimate Advanced Technology BAT limitations for the reasons set forth below. See DCN 14488. First, as a technical matter, mills subject to such interim limits most likely would need to install more chlorine dioxide generator capacity than they ultimately would use to achieve the Advanced Technology performance requirements. (EPA believes most Advanced Technology mills ultimately will employ complete substitution of chlorine dioxide for elemental chlorine, preceded by extended delignification processes—a sequence that calls for approximately 30 to 75 percent less chlorine dioxide than a mill would use to achieve the baseline BAT requirements depending on the degree of extended delignification used.) Second, as an economic matter, interim limitations driving a mill to over-design its chlorine dioxide generator would cause the mill to divert capital away

from the processes needed to achieve the ultimate Voluntary Advanced Technology BAT limitations. That diversion of resources undercuts one of EPA's principal assumptions regarding the economic achievability of the ultimate Voluntary Advanced Technology BAT limitations: that mills would be able to focus their capital and other resources entirely on those superior performance levels. Thus, EPA was concerned that by compelling achievement of baseline BAT limitations as "stage 1" limitations, EPA would unnecessarily inflate the overall cost of achieving the ultimate Advanced Technology limitations. This would likely cause some mills to conclude that they cannot sustain the overall costs of achieving the Voluntary Advanced Technology BAT limitations in an economically achievable manner. Other mills, in turn, might decide to absorb the additional costs by diverting resources from other environmentally beneficial projects that they might have voluntarily undertaken. The Clean Water Act authorizes EPA to consider non-water quality environmental impacts and other factors EPA deems appropriate in setting BAT limitations. See CWA Section 304(b)(2)(B). For these reasons, EPA believes that compelling achievement of the baseline BAT limits in the first instance would have had the contradictory and unintended effect of discouraging participation in the program, with the result that fewer mills ultimately would be motivated to achieve superior environmental performance. Finally, as discussed in more detail below, EPA is requiring mills at the Tier II and Tier III levels to achieve interim limitations equivalent to baseline BAT by April 15, 2004. See 40 CFR 430.24(b)(3).

b. Interim Milestones. As the second component of the Voluntary Advanced Technology BAT for the three Incentives Tiers, EPA is requiring the establishment of enforceable interim milestones. See 40 CFR 430.24(b) (2) and (3). EPA believes that interim milestones would incrementally benefit the environment during the period prior to achievement of the ultimate Advanced Technology performance levels and will ensure that participating mills make reasonable progress toward achieving the superior performance represented by the various Advanced Technology BAT Tiers.

EPA is promulgating two sets of enforceable interim milestones. The first set requires mills enrolled at the Tier II or the Tier III level to achieve limitations equivalent to baseline BAT limitations by April 15, 2004. 40 CFR 430.24(b)(3). (Mills enrolled at the Tier I level are required to achieve those limitations as well as the ultimate Advanced Technology limitations by that date. 40 CFR 430.24(b) (3) and (4).) EPA believes that this is a reasonable requirement not only because it ensures significant environmental progress consistent with CWA section 301(b)(2), but it also reflects the technology performance Tier II and Tier III mills are likely to be achieving by that date. Mills enrolled in Tier II and Tier III are expected to substantially modify pulping and bleaching processes (e.g., install extended delignification, ECF, or TCF bleaching) to comply with the Advanced Technology limitations. EPA expects that all Tier II or Tier III mills will install extended delignification and complete substitution (ECF) or TCF bleaching processes well in advance of achieving their wastewater flow objectives in order to allow sufficient time to design, install, test and adjust their other flow-related processes. In EPA's judgment, process changes sufficient to achieve baseline BAT limitations will occur by April 15, 2004. Once these processes are installed, the mill will be achieving or exceeding the baseline BAT limitations being required by that date. See DCN 14488.

EPA notes that mills required to achieve water quality-based or other effluent limitations equivalent to one or more of the Voluntary Advanced Technology BAT limitations are still eligible to enroll in the Voluntary Advanced Technology Incentives Program and to receive incentives for achieving the remaining Voluntary Advanced Technology limitations. However, the time for complying with water quality-based or other equivalent effluent limitations would be determined by applicable law, not by this Voluntary Advanced Technology Incentives Program. Therefore, for example, if a mill's NPDES permit compels immediate compliance with a dioxin limitation equivalent to the Voluntary Advanced (BAT) Technology limitation on dioxin because of water quality concerns or other requirements of state or federal law, this six-year milestone would not be available for that dioxin limitation. See CWA section 301(b)(1)(C).

The second set of enforceable interim milestones promulgated today applies to all mills enrolled in the Advanced Technology Incentives Program. Although today's rule leaves the type and frequency of these milestones to the permit writer's best professional judgment, see 40 CFR 430.24(b)(2), milestones should include intermediate pollutant load and wastewater flow reductions (for Tier II and Tier III mills) in addition to research schedules, construction schedules, mill trial schedules, or other milestones appropriate to the advanced technology and the participating mill. Interim milestones should be tailored to circumstances and process technologies at individual mills.

In order to facilitate the development of appropriate interim milestones on a case-by-case basis, EPA proposes elsewhere in today's **Federal Register** to require all mills enrolling in the incentives program to submit plans detailing the strategy the mill will follow to develop and implement the technology required to achieve the chosen incentive tier, as well as the interim numeric limitations for Tiers II and III. The plan should describe each envisioned new technology component or process modification the mill will need to achieve the Voluntary Advanced Technology BAT limits. A master schedule should be included in the plan showing the sequence of implementing the new technologies and process modifications and identifying critical path relationships within the sequence. For each individual technology or process modification, a schedule should be provided that lists the anticipated date that associated construction, installation, or process changes will be initiated, the anticipated date that those steps will be completed, and the anticipated date that the full Advanced Technology process or individual component will be fully operational. For those technologies or process modifications that are not commercially available or demonstrated on a full scale basis at the time the plan is developed, the plan should include a schedule for research (if necessary), process development, and mill trials. The schedule for research, process development, and mill trials should show major milestone dates and the anticipated date the technology or process change will be available for mill implementation. The plan also would need to include contingency plans in the event that any of the technologies or processes specified in the Milestones Plan need to be adjusted or alternative approaches developed to ensure that the ultimate tier limits are achieved by the dates in the master schedule. EPA expects the permitting authority to use the information contained in those plans, as well as its own best professional judgment, to establish enforceable interim milestones applying all statutory factors. EPA also expects permit writers to include reopener clauses in the permits to adjust these milestones including dates to reflect the

results of research (if necessary), process development, and mill trials.

Section 402(a) of the Clean Water Act authorizes permit writers to establish permit conditions and limitations on the basis of best professional judgment as necessary to achieve the objectives of the Act. Although EPA is promulgating BAT limitations under CWA sections 301 and 304, EPA is not—nor could it today—codify the particular process development, construction, and testing milestones that will lead each participating mill to achieve the ultimate Voluntary Advanced Technology performance requirements. Identifying those milestones is best left to the judgment of the permit writer, who will have access to far more mill-specific information than EPA has today.

c. "Stage 2" limitations. The third component of the Voluntary Advanced Technology BAT limitations consists of the "stage 2" limitations. See 40 CFR 430.24(b)(4)(i). These are the only standards applicable to Voluntary Advanced Technology NSPS and must be achieved upon commencing operation. See 40 CFR 430.25(c). Also included in the Voluntary Advanced Technology NSPS are standards for dioxin, furan, chloroform, 12 chlorinated phenolic compounds, BOD_5, TSS, and pH at the baseline NSPS level. See 40 CFR 430.25(c)(1). In addition, standards for pentachlorophenol and trichlorophenol, when used as biocides, are part of the Voluntary Advanced Technology NSPS. See 40 CFR 430.25(d).

These limitations and standards represent the ultimate performance requirements for each Tier. The "stage 2" limitations are as follows:

(1) Tier I Voluntary Advanced Technology BAT Limitations ("stage 2"). For Tier I, the ultimate performance requirement for AOX is a long-term average (LTA) of 0.26 kg/kkg, measured at the end of the pipe. 40 CFR 430.24(b)(4)(i). Under this Tier, Advanced Technology fiber lines at participating mills must also achieve reduced lignin content in unbleached pulps as measured by a kappa number of 20 for softwoods and 13 for hardwoods and reported as an annual average. *Id.* Finally, Tier I Advanced Technology fiber lines must recycle to recovery systems all filtrates up to the point at which the unbleached pulp kappa numbers are measured (e.g., brownstock into bleaching). Tier I also includes limitations for dioxin, furan, chloroform and 12 chlorinated phenolic pollutants, see 40 CFR 430.24(b)(3). Limitations on these parameters are established at the baseline BAT levels because application of Advanced Technologies does not appear on this record to justify more stringent limitations.

(2) Tier II Voluntary Advanced Technology BAT Limitations ("stage 2") and NSPS. For Tier II, the ultimate performance requirement for AOX is an LTA of less than 0.10 kg/kkg, measured at the end of the pipe. 40 CFR 430.24(b)(4)(i) and 430.25(c)(2). In addition, Tier II Advanced Technology fiber lines must recycle to chemical recovery systems all pulping-area filtrates prior to bleaching. *Id.* Finally, Tier II Advanced Technology fiber lines must also achieve total pulping area condensate, evaporator condensate, and bleach plant wastewater flow of 10 m^3/kkg or less reported as an annual average. *Id.* Tier II mills must also meet (or, in the case of existing dischargers, must continue to meet) limitations for dioxin, furan, chloroform, and the 12 chlorinated phenolic pollutants. See 40 CFR 430.24(b)(3) and 430.25(c)(1). Application of the Tier II Technologies does not appear to justify more stringent limitations for these parameters.

(3) Tier III Voluntary Advanced Technology BAT Limitations ("stage 2") and NSPS. For Tier III, the ultimate performance requirement for AOX is an LTA of less than 0.05 kg/kkg, measured at the end of the pipe. See 40 CFR 430.24(b)(4)(i) and 430.25(c)(2). In addition, Tier III Advanced Technology fiber lines must recycle to chemical recovery systems all pulping-area filtrates prior to bleaching. *Id.* Finally, Tier III Advanced Technology fiber lines must also achieve total pulping area condensate, evaporator condensate, and bleach plant wastewater flow of 5 m^3/kkg or less reported as an annual average. *Id.* Tier III mills must also meet (or, in the case of existing dischargers, must continue to meet) limitations for dioxin, furan, chloroform, and the 12 chlorinated phenolic pollutants. See 40 CFR 430.24(b)(3) and 430.25(c)(1). Application of the Tier III Technologies does not appear to justify more stringent limitations for these parameters.

d. Voluntary Advanced Technology BAT Limitations and NSPS for Mills Employing TCF Processes. In order to encourage mills to employ Advanced Technologies founded on TCF processes, EPA is opening today's incentives program to fiber lines that employ or commit to employ such processes. Existing dischargers that choose to employ TCF processes are subject to the "stage 1" limitations, interim milestones (including the baseline BAT limitations), and the "stage 2" limitations applicable to the selected tier. 40 CFR 430.24(b) and 430.25(c). These limitations are discussed above. However, recently gathered data from TCF mills indicate that all TCF mills will be able to achieve the AOX performance requirements at any Tier level because end-of-pipe AOX levels are being reported at below minimum level. See DCN 14488. Consequently, the AOX limitations for TCF fiber lines are expressed as "<ML." See 40 CFR 430.24(b) (3) and (4) and 430.25(c)(2). In addition, unlike mills using ECF processes to achieve Tier II and III BAT limits, TCF fiber lines would not receive limitations for the presence of TCDD, TCDF, chloroform, or the 12 chlorinated phenolics if they certify as part of their permit application (with appropriate corroborating data) that the bleaching process at those fiber lines does not involve the use of chlorine-based compounds. See 40 CFR 122.21(g)(3), (13) and 40 CFR 122.22(d). Similarly, a mill making the TCF certification is not subject to the minimum monitoring frequencies otherwise applicable to AOX. See 40 CFR 430.02. (For fiber lines that converted from ECF to TCF processes, mills should submit up to six months of AOX data—at the discretion of the permit writer—in order to allow the permit writer to determine an appropriate monitoring frequency on a best professional judgment basis.) EPA has determined that limitations on dioxin, furan, chloroform and the 12 chlorinated phenolic pollutants, and minimum monitoring requirements for AOX are unnecessary for TCF processes because a mill that does not use or generate compounds containing chlorine will not generate chlorine-related pollutants as a result of its bleaching processes. EPA hopes that such substantially reduced requirements for TCF mills will encourage more mills to employ TCF bleaching processes.

6. Selection of Voluntary Advanced Technologies as Bases for BAT Limitations and NSPS

Achievement of these BAT limitations, in particular the "stage 2" limitations for Tiers II and III, would represent substantial progress toward the national goal of eliminating the discharge of all pollutants. The "stage 2" limitations include limitations on AOX that are significantly more stringent than the baseline BAT limitations for AOX, as well as Tier-specific restrictions on the lignin content of unbleached pulps, the discharge of pulping area filtrates, and the quantity of total pulping area condensate, evaporator condensate and bleach plant wastewater flow. The latter restrictions, which are unique to the

Voluntary Advanced Technology Incentives Program, call for environmental performance far in excess of the performance compelled by the baseline BAT.

EPA chose the parameters and limitations unique to the Voluntary Advanced Technology Incentives Program because they reflect the levels of performance EPA believes can be achieved over time by mills willing and able to invest the resources to develop and apply the corresponding Advanced Technology processes and practices. The Tier I technology is available today and does not impose significant non-water quality environmental impacts; it was not selected as the baseline BAT technology because it is not economically achievable for the subcategory as a whole or any segment as is discernible from the record available today. See Section VI.B.5.a(5). However, for mills willing and able to employ that technology, EPA believes that limitations based on extended delignification, complete substitution, and other processes would be economically achievable by the year 2003. EPA believes that the technology bases for Tier II, in turn, could be technically and economically achievable for mills willing to participate by the year 2008, and would not impose significant non-water quality environmental impacts. EPA bases its view on the experience of at least three U.S. mills that are moving in the direction of reduced bleach plant flow. See DCN 14488. None of these mills, however, is presently achieving the "stage 2" flow limits for Tier II because those limits include pulping area and evaporator condensate as well as bleach plant wastewater flow. Finally, with respect to Tier III, EPA notes that one mill in Finland today is achieving flow levels close to 5 m^3/kkg or less, although this mill's flow rates also exclude condensates. This mill is able to achieve its current level of performance without imposing significant non-water quality environmental impacts. In addition, mills choosing Tier III will have up to 16 years and considerable flexibility to develop and implement appropriate flow control strategies. (For a discussion of the timeframes associated with achieving the Voluntary Advanced Technology BAT Limitations, see Section IX.A.7.) While EPA recognizes that achievement of the "stage 2" limits for Tier III may call for considerable creativity and innovation by industry participants, EPA believes that such spurs to innovation are consistent with the Clean Water Act's ultimate goal of eliminating the discharge of pollutants. Finally, EPA emphasizes that participation in the Advanced Technology Incentives Program is purely voluntary. No mill in the Bleached Papergrade Kraft and Soda subcategory is required to commit to achieve the Voluntary Advanced Technology BAT limitations at any level.

The voluntary nature of the Advanced Technology Incentives Program also supports EPA's finding that the "stage 2" BAT limitations for the various Incentives Tiers will be economically achievable by the dates specified in the rule for the mills choosing to achieve them. See 40 CFR 430.24(b)(4)(ii). The "stage 2" limitations apply only to mills that designate themselves as Tier I, Tier II or Tier III Advanced Technology performers and that voluntarily accept the corresponding "stage 2" limits in their NPDES permits. In other words, the "stage 2" limitations are BAT for an Advanced Technology mill only because that mill announces, by choosing to participate in the Program and by its choice of Tier, that by the date specified in the rule for the applicable "stage 2" limits a technology will be both available and economically achievable for the purpose of achieving those limitations. Based on the experiences of mills that have voluntarily pursued performance levels comparable to the "stage 2" limitations of Tiers I and II, EPA believes that a mill choosing to pursue those objectives can do so within its economic capability. Therefore, EPA believes it is reasonable to presume that a mill would not subject itself to enforceable technology-based limits if achievement of those limits would exceed the mill's economic capability. Because the economic achievability of the "stage 2" limitations ultimately is evaluated according to the mill's own choices, EPA concludes that the "stage 2" limitations are economically achievable. In addition, while implementation of these Advanced Technologies today is beyond the economic capabilities of many mills because of the significant capital investments that can be incurred at the outset, EPA believes that a mill able to plan for these investments over time could reduce those investment costs to some extent, if only by minimizing the amount of capital the mill would need to borrow. Moreover, with additional time mills will inevitably find ways to implement these technologies that reduce costs. More importantly, it could make these environmental improvements in sequence with other business decisions related to capital investment, thus reducing the overall cost of installing the Advanced Technologies. Although on this record EPA cannot state with confidence what the cost of implementing these Advanced Technologies would be if spread over time (and hence cannot make an economic achievability finding for the subcategory as a whole or any discernible segment relating to those Advanced Technologies), EPA nevertheless believes that each mill is capable of making that judgment and assuming the corresponding economic risks. This Voluntary Advanced Technology Incentives Program thus establishes a structure by which mills willing to predict their economic fortunes over the next several years and to commit to enforceable permit limits based on that prediction can do so.

EPA has considerable discretion under CWA section 304(b)(2) to determine whether and when a particular technology or process is BAT. EPA also has broad authority to interpret CWA section 301. In *E.I. du Pont de Nemours & Co.* v. *Train,* 430 U.S. 112 (1977), the Supreme Court accorded great deference to EPA in promulgating effluent limitations guidelines as regulations under section 301, noting that "[CWA Section] 101(d) requires us to resolve any ambiguity on this score in favor of the Administrator." *Id.* at 128. The Supreme Court also found that section 501(a) supports EPA's broad use of its regulatory authority to implement section 301. *Id.* at 132. EPA believes that its decision to promulgate Voluntary Advanced Technology BAT limitations is authorized by sections 301 and 304. Section 301(b)(2) in particular directs EPA to promulgate BAT limitations that, within the constraints of economic achievability, "will result in reasonable further progress toward the national goal of eliminating the discharge of all pollutants." Section 301(b)(2)(A). In addition, both case law and the legislative history interpreting the BAT program make it clear that the statute is to be used to force technology, within the constraints imposed by sections 301(b)(2) and 304(b)(2). Promulgation of regulations to promote the use of Advanced Technologies and, hence, progress toward the elimination of pollutant discharges thus is within the scope of the Administrator's 501(a) authorities. *See Cleveland Electric Illuminating Co.* v. *EPA,* 603 F.2d 1, 6 (6th Cir. 1979) ("The ultimate justification for every regulation and guideline pertaining to discharges is its effectiveness in promoting the achievement of the goals of Congress in enacting the 1972 Amendments.")

As part of its BAT analysis, EPA performed a case-study analysis to determine the potential effluent reduction benefits derived from the incentives program. Effluent reductions were calculated for a hypothetical case-study mill complying with Voluntary Advanced Technology BAT limitations at each incentive Tier. This case study is discussed in more detail at DCN 14488. The 1000 metric ton-per-day case-study mill operates a softwood and a hardwood bleach line of equal size, and uses a conventional three-stage bleach sequence with chlorine on each line. Table IX–1 presents effluent load reductions from that case-study mill, calculated for the baseline BAT (BAT Option A) as well as each incentive Tier.

TABLE IX–1.—EFFLUENT LOAD REDUCTIONS FOR CASE STUDY MILL

Pollutant	Units	Baseline BAT Technology	Tier I	Tier II	Tier III
AOX	kkg/yr	670	770	830	840
BOD5	kkg/yr	290	440	720	870
COD	kkg/yr	6,000	11,000	13,000	18,000
Color	kkg/yr	2,000	15,000	30,000	34,000
Chloroform	kg/yr	290	290	290	290
TCDD&TCDF	g/yr	4.9	4.9	5.0	5.0
12 Chlorinated Phenolics	kkg/yr	1,000	1,100	1,200	1,200

Note that for all levels, TCDD, TCDF, chloroform and the 12 chlorinated phenolics will not be detected in the final effluent. The differences between the levels are the result of technologies employed to reduce discharge flow rates under the incentive Tiers.

In selecting the technology basis for each of the Incentives Tiers, EPA also evaluated the associated non-water quality environmental impacts, changes in energy requirements, the age of facilities and equipment involved, the process used, and the engineering aspects of various types of control techniques and process changes. See DCN 14488. Nothing in EPA's analysis of these factors justified selecting different BAT technologies than those identified in section IX.a.3. EPA found that the technologies that form the basis of the Incentives Tiers provide a significant degree of water conservation, particularly at Voluntary Advanced Technology Tiers II and III. EPA also expects lower secondary sludge generation rates at Incentives Tier mills with activated sludge treatment because of reduction in BOD_5 loads associated with the Advanced Technologies. The technology basis of each of the Incentives Tiers will lead to overall decreases in energy consumption, primarily because of replacement of chlorine dioxide with oxygen-based delignification and bleaching chemicals. EPA expects a slight increase in air emissions (<2 percent) due to increased recovery of black liquor that will occur under the Incentives Tiers. However, these are offset by reductions in air pollution that derive from the reductions in overall energy consumption.

EPA considered the potential for cross-media transfer of pollutants through implementation of the Advanced Technologies that form the basis of the Incentives Tiers. EPA found no basis to conclude that cross-media transfer of pollutants would occur. See DCN 14488 and DCN 14492. However, much of the Tier II and Tier III technology bases focus on closing mill process cycles, which has not yet been fully demonstrated. As these technologies are fully developed and implemented, sufficient engineering analyses and testing should be performed to assess whether unacceptable cross media transfer of pollutants are occurring, and whether modifications need to be made to avoid any unacceptable transfers identified.

For NSPS, EPA has determined that Tier II and Tier III technologies constitute the best demonstrated control technologies for mills enrolling in those tiers. Although EPA cannot say today that either of these technology sequences is the best demonstrated control technology for new sources in the Bleached Papergrade Kraft and Soda subcategory as a whole, EPA does believe that new sources emerging within the next 16 years may characterize them as such based on their own sense of their economic and technical capabilities. Therefore, as with existing sources, EPA is promulgating this additional array of NSPS in order to provide such mills the opportunity to pursue voluntarily pollution prevention technologies—and to accept correspondingly more stringent effluent limitations—if business circumstances warrant. EPA notes that a mill subjecting itself to the Advanced Technology NSPS will be shielded from more stringent technology-based effluent limitations for ten years beginning on the date that construction is completed. See CWA section 306(d). Because these standards are entirely voluntary, their promulgation today presents no barrier to entry. In addition, EPA has determined that achievement of these standards will not result in any significant non-water quality environmental impacts or significant additional energy requirements. See DCN 14488. Nothing in EPA's analysis of the other statutory factors applicable to NSPS justified selecting different NSPS technologies.

EPA also believes it is appropriate to promulgate limitations for all three Tiers at the same time it promulgates the baseline BAT limitations. (The same rationale applies for today's Voluntary Advanced Technology NSPS.) By promulgating all three Voluntary Advanced Technology BAT Tiers today, rather than in five-year increments, EPA hopes to encourage as many mills as possible to develop and install Advanced Technologies. On this record, EPA has determined that its customary practice of promulgating a single BAT for similarly situated mills—represented here by the baseline BAT limitations—would have the unintended effect of impeding some mills' progress toward even greater environmental objectives than EPA can compel at this time. Thus, if EPA were to promulgate only baseline BAT limitations today and not establish a parallel track for mills converting to Advanced Technologies, EPA is concerned that mills might abandon their voluntary long-term strategies of superior environmental performance in favor of compulsory short-term compliance strategies focused on the baseline BAT. Instead, by promulgating Voluntary Advanced Technology BAT limitations at the same time as baseline BAT limitations, EPA allows interested mills to consider all technology options at the outset before they make their investment decisions and to design and install precisely the technologies and

processes they will need to meet their long-term Advanced Technology objectives. Therefore, EPA has decided to promulgate all of the Voluntary Advanced Technology BAT limitations today in order to provide mills with an opportunity to push their environmental performance beyond the minimum prescribed by the baseline BAT and on toward the statutory goal of zero discharge. Promulgating the various Voluntary Advanced Technology Tiers today rather than in five-year increments also provides some predictability regarding the progress expected of Advanced Technology mills over time. EPA hopes that this predictability will encourage greater participation in the program and thus lead to superior effluent quality. Finally, promulgating all three Tiers of Advanced Technology BAT Limitations today makes sense because it reflects EPA's regulatory approach for promoting successively greater environmental achievements for this industry, and because companies willing to commit to achieve the increased environmental controls will be able to avoid the uncertainties inherent in a succession of later rulemakings.

EPA has the authority to promulgate the three Tiers of Voluntary Advanced Technology BAT limitations today even though their ultimate performance requirements will not be attained until a future date. EPA has the authority under CWA section 304(b)(2) and 304(m) to revise the baseline BAT limitations for the Bleached Papergrade Kraft and Soda subcategory whenever the Administrator deems it is appropriate. Thus, EPA would be free in 5, 10 or 15 years to codify the Voluntary Advanced Technology limitations as BAT. However, by then, mills potentially interested in pursuing Advanced Technologies would already have been required to meet baseline BAT limitations, perhaps using technologies not fully compatible with more advanced processes. The costs of retrofitting, or in some cases replacing, newly installed process technologies to achieve more stringent limits might prevent EPA from finding that these technologies are economically achievable. In addition, participating mills would lose a long-term planning horizon, which is very important because of the significant capital outlays involved. As a result, EPA was concerned that failure to promulgate these Voluntary Advanced Technology BAT limitations today might compromise future pollution prevention opportunities. EPA is authorized to consider those opportunities when promulgating BAT limitations. EPA therefore believes it is appropriate to consider these barriers to pollution prevention as factors relevant to the definition of BAT limitations and the timing of their promulgation, see CWA section 304(b)(2)(B); especially since failure to promulgate a Voluntary Advanced Technology Incentives Program at this time might impede reasonable further progress toward the national goal of eliminating discharges of all pollutants. *See* CWA section 301(b)(2).

An important component of this incentives program is the element of choice. Direct discharging mills subject to Subpart B may choose whether to enroll in the program and, once enrolled, may choose the Tier, or performance level, that they will achieve. In order to codify this structure, EPA has promulgated three sets of Voluntary Advanced Technology BAT limitations for bleached papergrade kraft and soda mills and two sets of NSPS in addition to the baseline BAT and NSPS. In effect, EPA has divided Subpart B into segments based on the types of bleach plant processes mills choose to employ. EPA has considerable authority to establish segments within an industrial subcategory for the purpose of promulgating BAT limitations unique to those mills. Much like mill-specific variances based on fundamentally different factors, segments reflect EPA's authority to take into account the diversity within each industry. See *Chemical Mrfs. Ass'n* v. *NRDC,* 470 U.S. 116, 130, 105 S.Ct 1102, 1110 (1985). Thus, segmentation, like variances, is not an exception to the standard-setting process, but rather a more fine-tuned application of it. *Id.*

For BAT, EPA has essentially established four segments for the Bleached Papergrade Kraft and Soda subcategory (and, similarly, three segments for NSPS). One segment codifies the baseline BAT limitations; the other three segments codify Tiers I, II and III of the Voluntary Advanced Technology BAT Incentives Program. EPA defined the Advanced Technology segments to reflect the various types of process changes and control techniques that mills might employ to achieve environmental performance beyond the baseline BAT level. The Advanced Technology segments also reflect the cost of achieving progressively greater environmental effluent reductions. Any one of those factors is sufficient under CWA section 304(b)(2) to justify a segment for affected mills. Each mill in Subpart B must comply with the baseline BAT limitations unless it designates itself as an Advanced Technology mill, in which case it must meet the BAT limitations corresponding to the Tier—and segment—it chooses.

Although EPA has identified an array of process changes that, if employed, could distinguish one Subpart B mill from another and has based its Advanced Technology limitations on those potential changes, EPA has made the Advanced Technology segments voluntary. This is because the decision whether Advanced Technology process changes are technically feasible and economically achievable for a particular mill depends on many factors unique to that mill that EPA, on the record available today, cannot readily discern or forecast. Among the more significant factors appear to be the mill's current bleaching sequence, the physical configuration of equipment, the age of equipment (and, thus, end-of-life issues), the available capacity in chlorine dioxide generation and in the recovery boiler, and whether the mill uses hardwood or softwood. See DCN 14488. *See* also Paper Task Force, Technical Supplement White Papers, Record section 20.2.8, DCN 14794, DCN 14795, and DCN 14796.

EPA also has important policy reasons for making the Advanced Technology BAT limitations voluntary, both in terms of the decision to participate and in terms of the level of environmental performance to be achieved. As discussed in greater detail above, EPA believes that mills willing and able to employ technologies and processes superior to the "baseline" promulgated as BAT—and willing to guarantee that effort in the form of enforceable technology-based permit limitations—should have the opportunity to do so. By giving mills a choice to exceed baseline compliance levels, EPA implements CWA section 301(b)(2)'s direction that BAT limitations "result in reasonable further progress toward the national goal of eliminating the discharge of all pollutants," to the extent consistent with EPA's findings of economic achievability, among other factors. By allowing mills to choose between baseline BAT limitations and Voluntary Advanced Technology BAT limitations at the outset, EPA also wants to encourage mills to consider all possible process configurations before investing in the baseline BAT technology. Thus, by codifying multiple expressions of BAT, EPA has established a regulatory mechanism that allows mills to choose greater environmental performance than EPA could require on this record and also authorizes permit writers to

memorialize that choice in the form of enforceable permit limits.

Although applied here for the first time to codify a Voluntary Advanced Technology Incentives Program, the notion of using segmentation to determine applicable technology-based limitations is not new. Indeed, effluent limitations guidelines and standards routinely base applicability of technology-based limitations on a discharger's particular process or treatment technologies. For example, elsewhere in today's rule EPA is segmenting the Papergrade Sulfite subcategory to reflect, among other things, the type of product the mill produces. Thus, a papergrade sulfite mill choosing to produce specialty products subjects itself to a different set of limitations than other mills in its subcategory simply by making that business decision. EPA also used segmentation to account for different treatment configurations when it promulgated BAT for the organic chemicals, plastics and synthetic fibers category. *See* 40 CFR 414.91, 414.101; 58 FR 36872, 36881–85 (July 9, 1993). In that rule, EPA established two sets of BAT limitations for a subcategory of plants, one set applicable to plants using end-of-pipe biological treatment and the other set applicable to plants using some other treatment technology, including in-plant waste management practices. In this rule, the Advanced Technology segments are intended to anticipate a mill's business decision to change its cooking, washing, bleaching, wastewater recycle, and recovery processes to achieve greater pollutant reductions than EPA can require as baseline BAT. Indeed, by establishing these segments, EPA hopes to encourage many mills to choose Advanced Technologies, especially those mills that would need to change their bleaching and washing processes in any event to comply with the baseline BAT.

EPA also notes that it could have accomplished the same result for existing sources on a case-by-case basis through the Clean Water Act's variance processes. *See Chemical Mrfs. Ass'n* v. *NRDC,* 470 U.S. at 130, 105 S.Ct at 1110. Advanced Technology mills could have sought fundamentally different factors variances under CWA section 301(n); for non-conventional pollutants, these mills could have pursued a variance under section 301(c). Under either section, mills could have obtained BAT effluent limitations that are more or less stringent than the baseline BAT. *See Chemical Mrfs. Ass'n* v. *NRDC,* 470 U.S. at 116, 105 S.Ct at 1105–06 (FDF variances); *EPA* v. *National Crushed Stone Ass'n,* 449 U.S. 64, 79 n.18 (1980) (§ 301(c) variances). However, EPA rejected implementing the Voluntary Advanced Technology Incentives Program through variances for several reasons. First, the Clean Water Act and its legislative history indicate a clear Congressional preference for the use of subcategories, rather than variances, to address discernible differences among regulated entities. By requiring applications for FDF variances to be based on information submitted during the rulemaking process (unless the applicant lacked a reasonable opportunity to make such submission), *see* section 301(n)(1)(B), Congress stressed the need for companies to participate fully in the guideline development process to assure that adequate information is available to EPA to develop appropriate subcategories. *See* 131 Cong. Rec. S 8013 (June 12, 1985) (Sen. Bentsen); *see also* 133 Cong. Rec. H 131, 136–37 (Jan. 7, 1987) (Rep. Howard) (provision assures that effluent guidelines "are as comprehensive as possible"); 133 Cong. Rec. S 733, 739 (Jan. 14, 1987) (Sen. Mitchell) (EPA should accommodate fundamental differences among facilities through the establishment of subcategories). In this rulemaking, many commenters supplied vast amounts of information concerning the special circumstances of facilities aspiring to become minimum impact mills. As Congress intended, EPA established the three Voluntary Advanced Technology segments in response to that information rather than deferring consideration of the issue to the post-rulemaking variance process.

Second, as a matter of policy, EPA believes it is reasonable to employ its subcategorization, rather than its variance, authority to implement the Voluntary Advanced Technology Incentives Program. By establishing the Voluntary Advanced Technology BAT limitations by rulemaking at the same time it codifies the baseline BAT limitations, EPA intends to provide all direct discharging mills within Subpart B the immediate opportunity to push beyond base level environmental performance and also to provide with certainty regarding the stringency and timing of the limits they would be expected to meet. In this way, EPA hopes to encourage many mills to participate in the program. Use of case-by-case variance procedures, in contrast, would introduce delay and uncertainty into the process, which EPA believes would discourage industry participation.

In summary, EPA has discretion in determining whether to account for industry characteristics through subcategorization or through the variance process. Like variances, the Voluntary Advanced Technology segments apply only to mills that on their own initiative seek different BAT limitations. Unlike variances, however, the subcategorization scheme promulgated by EPA assures consistent and timely implementation of the Voluntary Advanced Technology Incentives Program, which EPA believes is critical to its success. Therefore, for the reasons explained, EPA's decision to subcategorize Subpart B was rational and within its discretion.

7. Time Frames for Achieving Voluntary Advanced Technology BAT Limitations

In order to promote the pollution prevention objectives of the Voluntary Advanced Technology Incentives Program, EPA has determined that existing mills choosing to participate in that program should receive a reasonable amount of time to achieve the Advanced Tier performance levels they select. See 40 CFR 430.24(b)(4)(ii). (These performance levels are codified in this rule as "stage 2" BAT limitations.) The extended timeframes discussed below are not available for new sources enrolled in the Advanced Technology Incentives Program because the Clean Water Act requires new sources to comply with applicable NSPS upon commencing operation. CWA Section 306(e). However, new sources interested in participating in the Voluntary Advanced Technology Incentives Program after commencing operation may nevertheless do so, for example, by achieving the baseline NSPS requirements at the time discharges commence and later installing additional technologies necessary to achieve the more stringent AOX and flow requirements of Tiers II or III. Once limitations equivalent to the selected advanced Tier performance levels are placed in the mill's permit and the mill achieves those limits, it is eligible to receive the regulatory and enforcement relief described as incentives in Section IX.B. below.

EPA has determined that reasonable dates by which existing sources can achieve Advanced Technology performance requirements are *[April 15, 2004]* for Tier I, April 15, 2009 for Tier II, and April 15, 2014 for Tier III. See 40 CFR 430.24(b)(4)(ii). As discussed in more detail below, these dates assume an initial start-up year during which mills subject to Subpart B would decide whether to enroll in the Voluntary Advanced Technology Incentives Program and develop a plan for complying with the ultimate incentives

BAT limitations. The remaining additional time, calculated as 5 years for Tier I, 10 years for Tier II, and 15 years for Tier III, corresponds to the time EPA believes a mill would need in order to arrange its financing and to develop, install, test, and implement the chosen Advanced Technologies at full scale to comply with the ultimate tier limits.

EPA regards five years as a reasonable time frame to achieve the Voluntary Advanced Technology BAT limitations corresponding to Tier I (including the bleach plant BAT effluent limitations). When spread over five years, the capital costs of those technologies become more manageable (although they are still significantly higher than the capital costs associated with the baseline BAT). In addition, the five year period gives mills increased flexibility to schedule the significant capital investment within the mill's normal capital investment cycle, i.e., to purchase and install the necessary equipment when capital is available. Therefore, EPA believes the five year period will enable mills to participate in the Voluntary Advanced Technology Incentives Program that otherwise might not have the financial resources to make the necessary capital investment.

EPA regards ten years as a reasonable timeframe to achieve the Voluntary Advanced Technology BAT limitations corresponding to Tier II because the development and implementation of technologies to reduce bleach plant flow to 10 m^3/kkg pose technical and economic difficulties that EPA believes would take mills up to ten years to resolve. (Once flow levels are reduced, EPA expects that mills also will be able to achieve the Tier II AOX limitations.) Recycling a substantial portion of pulping and evaporator condensates and bleach plant filtrates, with the attendant complexities of total mill water, chemical, and energy balances, requires considerable time before it can be implemented successfully at mill-scale. For example, when bleach plant filtrates are recycled, problems with scale and corrosion can take many months to over a year to develop and be observed. Once identified, fully correcting such problems can take significant additional time because of the time lag between action and observed effect in nearly closed systems. In addition to problems with scale and corrosion, mills pursuing Tier II performance levels may have to solve challenges associated with reusing condensates, such as for bleached pulp washing. There are a few mills currently doing this, but not broad operating experience. Consequently, EPA expects that Tier II mills will need to invest considerable time and effort to research and develop solutions to those technical problems. In addition to these technical challenges, significant capital costs may be involved in achieving Tier II limits, notably as a result of upgrading full pulping and bleaching lines and associated evaporator equipment. Providing an extended timeframe that allows a mill to make such capital expenditures on a schedule consistent with its planned investment cycle can make such large investments economically achievable. For example, one U.S. mill currently approaching the Tier II flow and AOX levels installed many of the relevant technologies in stages over what probably will be a ten-year period, with the last three years used for testing and fine-tuning its reduced flow processes. Yet even this mill still needs to address the technical challenges of further reducing condensate discharge flow before it is fully able to achieve the Tier II BAT limits. That mill needed ten years to plan its multi-hundred million dollar renovation and pollution prevention investment, to arrange appropriate financing, to install supporting technologies at appropriate intervals and to research, develop, test, and refine its innovative flow-reducing processes. EPA believes that this mill's experience is representative of what other Tier II mills may encounter as they work to achieve the Tier II limitations. See the Voluntary Advanced Technology Incentives Program Technical Support Document (DCN 14488) for additional examples of why the ten-year timeframe is appropriate. Based on these experiences, EPA believes that the package of technologies underlying the Tier II Voluntary Advanced Technology BAT limitations will not be technically and economically achievable for mills aspiring to those performance levels until April 15, 2009. However, EPA believes that mills will be able to achieve the baseline BAT limitations by April 15, 2004, and enforceable interim milestones reflecting intermediate levels of flow reduction (determined on a case-by-case basis) in a period shorter than eleven years.

EPA regards 15 years as a reasonable timeframe to achieve the Voluntary Advanced Technology BAT Limitations corresponding to Tier III. As for Tier II, flow reduction again is the most difficult and time-consuming task. However, because reducing flow for pulping and evaporator condensates and bleach plant filtrates to 5 m^3/kkg or even lower approaches a closed mill configuration, even more technically difficult and time-consuming tasks must be successfully completed, necessitating five additional years beyond the Tier II timeframe. For example, mills would probably need to install "kidney" technologies to remove metals and chlorides in order to control system scaling and corrosion problems while maintaining product quality and minimizing cross-media impacts. Successful completion of these tasks at individual mills may involve research, extensive process development, and mill trials. The types of corrosion and scaling problems EPA anticipates could take over a year of nearly closed-loop operation to identify and several more years of experimental modifications to mill operations to solve. Extensive time is required for such modifications because of the time lag in nearly closed-mill systems from changing process conditions and observing the steady state impact on hydraulic systems, liquor systems, and associated mill equipment. Mills may also need to embark on process development and mill trials to achieve treated condensate quality that is sufficient to extensively reuse condensates, as well as to reestablish complex mill water and energy balances. For these reasons, EPA believes that 15 years is a reasonable amount of time for a Tier III mill to perfect existing technologies or invent or develop new ones as necessary to achieve the Tier III performance levels. However, EPA believes that all mills will be able to achieve the baseline BAT limitations by *[April 15, 2004]*, and enforceable interim milestones reflecting intermediate levels of flow reduction (determined on a case-by-case basis) in a period shorter than 15 years.

In short, EPA believes that the additional 5, 10 and 15 year periods provided by the rule are necessary to foster investment, research, development, and mill trials of Advanced Technologies envisioned by the specified performance levels. EPA further believes that, by the dates specified in the rule, technologies necessary to achieve those performance levels will indeed be available. See DCN 14488.

EPA has concluded that it is reasonable to measure the extended time periods from the publication date of the Cluster Rules rather than from the date a participating mill's NPDES permit is issued, with the addition of one year at the beginning to afford mills a meaningful opportunity to consider participating in the Voluntary Advanced Technology Incentives Program. EPA recognizes that the decision whether to commit to the Advanced Technology goals cannot be undertaken lightly. This is especially so in view of the significant

capital costs involved and in view of possible uncertainties regarding the availability of appropriate cost-effective technologies and a mill's ability to maintain product quality. Accordingly, EPA expects the decision would need to be made at the corporate rather than the facility level, which would probably require corporate-wide consideration of the firm's financial health, its environmental objectives and future marketing strategies, and its overall long-term plans. Because EPA believes that many firms in Subpart B have been pondering these strategic questions since publication of the proposed rule in December 1993 and the notice regarding a possible incentives program in July 1996, EPA has concluded that one year is sufficient to allow firms to make a decision whether to participate in the Voluntary Advanced Technology Incentives Program. If a mill's permit expires and is reissued before April 15, 1999, the permitting authority should incorporate Voluntary Advanced Technology BAT Limitations into that permit at the mill's request. If the mill has not yet decided whether to participate in the Voluntary Advanced Technology Incentives Program, the permit writer should incorporate BAT limitations based on the BAT baseline and should include a reopener clause so that the permit can be modified as necessary to reflect the mill's decision to participate in the incentives program. In order to afford that mill a full year to decide whether to enroll in the incentives program, EPA believes it would be appropriate for the permitting authority to issue a compliance order expiring April 15, 1999 so that the mill would not be required to comply with the baseline BAT limitations until after the election date has passed.

Some commenters suggested that EPA measure the Advanced Technology time periods from the date the first permit reflecting Voluntary Advanced Technology BAT limitations is issued. EPA rejected that approach and instead is measuring the time periods from the publication date of this rule (plus one year) for the following reasons. First, these timeframes reflect EPA's conclusions regarding the amount of time that mills would need in order to achieve the various Voluntary Advanced Technology Tier performance levels, once they have committed to those goals. As discussed in more detail above, EPA based these conclusions on record information concerning the availability of technologies and capital, among other factors. These factors have nothing to do with the permitting cycle. Second, as a matter of policy, EPA wants to promote implementation of advanced technologies as soon as possible; if EPA were to measure the Advanced Technology time periods from the date of permit re-issuance, achievement of the ultimate Tier I performance requirements and the interim baseline BAT limitations for Tiers II and III, for example, could be deferred at some mills by as much as ten years from the date of promulgation. Third, EPA was concerned that tying the Advanced Technology time periods to highly variable permit issuance dates would mean that mills with later permits would realize a competitive advantage over similarly situated mills that, merely because of their particular permit cycle, would need to achieve the Voluntary Advanced Technology BAT limitations sooner. Such inequities—whether perceived or real—could discourage some mills from participating in the Voluntary Advanced Technology Incentives Program. Finally, mills in the Bleached Papergrade Kraft and Soda subcategory have been on notice since at least 1993 that EPA was considering basing some portion of its Cluster Rules on extended delignification technologies. (In its 1993 proposal, EPA proposed to base BAT limitations on a process that included oxygen delignification and 100 percent substitution of chlorine dioxide for elemental chlorine.) In some cases, that proposal has already influenced investment decisions at some mills.

EPA acknowledges that a mill choosing not to participate in the Voluntary Advanced Technology Incentives Program could seek a compliance schedule in an enforcement order that, depending on the date its permit was reissued, could allow that mill to achieve BAT limits (including a less stringent AOX limit) at a later date than Tier I Advanced Technology mills would be required to achieve a more stringent AOX limit *and* reduced kappa numbers and pulping area filtrate recycling. While EPA agrees with comments characterizing this as unfair to those facilities making the significant commitment to install Advanced Technologies, EPA believes that the likelihood of such inequities is small for the following reasons. First, EPA has determined that this is likely to happen in comparatively few cases. More than 80 percent of the permits issued to mills in the Bleached Papergrade Kraft and Soda subcategory will expire before 2000. See Record section 21.8.1, DCN 14652. Consequently, EPA believes that most Advanced Technology mills will receive more time to achieve Tier I limits than other mills would receive to achieve baseline BAT limits, even with an enforcement compliance schedule. Second, when EPA is the permitting authority, EPA will exercise its enforcement discretion to refrain from issuing enforcement compliance schedules after April 15, 1999 to mills not participating in the Voluntary Advanced Technology Incentives Program. This means that a mill not participating in the Voluntary Advanced Technology Incentives Program would be expected to comply with its baseline BAT limits by the date its permit containing those limits is issued, or by *[April 15, 1999]*, whichever is later. EPA will also publish guidance urging State enforcement authorities to do the same. By limiting the discretionary enforcement-related compliance schedules available to baseline BAT mills, EPA hopes that the additional time periods specified for Advanced Technology mills will become a more meaningful incentive and perhaps may persuade some mills to participate in the incentives program rather than comply immediately with the baseline BAT limitations.

8. Legal Authority to Promulgate a Package of Progressively More Stringent Voluntary Advanced Technology BAT Limitations

As described in more detail above, the Advanced Technology BAT guidelines for each Tier consists of a range of successively more stringent limitations and permit conditions that represent a mill's progress toward the Tier's ultimate Advanced Technology performance requirements. Based on its analysis of today's advanced and, in some cases, innovative technologies and its judgment regarding the historically rapid advance of pollution prevention processes in this industry, EPA has determined that those performance requirements are achievable, as a technical matter, by the dates specified in each Tier, and that none of the other statutory factors in CWA Section 304(b)(2)(B) justify selecting different technology bases for Advanced Technology BAT. EPA has also determined that those Advanced Technology performance requirements are within the economic capability of mills choosing today to meet them and hence are economically achievable for those mills. EPA bases that determination primarily on two factors. First, no mill is compelled to enroll in the Voluntary Advanced Technology Incentives Program; accordingly, EPA assumes that mills that choose to enroll—and voluntarily subject themselves to a progression of

successively more stringent, enforceable permit limits—do so with the knowledge that they have the economic as well as technical ability to meet those limits. Second, the experience of other mills that voluntarily undertook major pollution prevention projects informs EPA that the ambitious performance requirements are indeed achievable for participating mills if the incremental improvements are staggered over time.

This incremental approach is authorized by CWA section 301(b)(2)(A), which expressly requires BAT to result in reasonable further progress toward the national goal of eliminating pollutant discharges. EPA believes that each of the steps comprising the three tiers of Voluntary Advanced Technology BAT Limitations moves participating mills toward that national goal. Once a mill enrolls in the Voluntary Advanced Technology Incentives Program, it accepts and must begin immediately to implement a BAT package consisting of successively more stringent permit limits and conditions. Although environmental improvements are realized only incrementally, the mill is subject to the total set of limits—including the ultimate performance requirements—as soon as its Advanced Technology permit is written based on the first increment of that BAT package. Thus, the mill is continuously subject to and must comply immediately with the Advanced Technology BAT package as it progressively unfolds, including each interim BAT limitation or permit condition representing that progress.

EPA's promulgation of BAT as a package of progressively more stringent limitations and conditions is also consistent with the use of BAT as a "beacon to show what is possible." *Kennecott* v. *EPA*, 780 F.2d 445, 448 (4th Cir. 1985). Thus, while the compulsory BAT in this rule functions as the "base level" for the subcategory as a whole, *see E.I. du Pont de Nemours & Co.* v. *Train*, 430 U.S. 112, 129 (1977), EPA expects the Voluntary Advanced Technology BAT limitations to drive technologies and mills beyond that base level toward achievement of the goals of the Clean Water Act. By holding out the Advanced Technologies as beacons of progress, EPA believes that today's rule will encourage more mills to strive toward EPA's pollution prevention and reduced flow objectives than might otherwise do so if EPA promulgated nothing more than a "base level" BAT. Moreover, by codifying progressively more stringent limitations in today's Advanced Technology BAT package, EPA promotes a form of technological progress that is consistent with Congressional intent that BAT should aspire to "increasingly higher levels of control." *See, e.g.*, Statement of Sen. Muskie (Oct. 4, 1972), *reprinted in* A Legislative History of the Water Pollution Control Act Amendments of 1972 ("1972 Leg. Hist."), at 170. It is also consistent with the overall goals of the Act. *See* CWA Section 101(a). Agencies have considerable discretion to interpret their statutes to promote Congressional objectives. " '[T]he breadth of agency discretion is, if anything, at zenith when the action * * * relates primarily to * * * the fashioning of policies, remedies and sanctions, including enforcement and voluntary compliance programs[,] in order to arrive at maximum effectuation of Congressional objectives.' " *U.S. Steelworkers of America* v. *Marshall*, 647 F.2d 1189, 1230–31 n.64 (D.C. Cir. 1980) (upholding OSHA rule staggering lead requirements over 10 years) (quoting *Niagara Mohawk Power Corp.* v. *FPC*, 379 F.2d 153, 159 (D.C. Cir. 1967)), *cert. denied*, 453 U.S. 9113 (1981). In this case, the codification of progressively more stringent BAT limitations advances not only the general goal of the Clean Water Act, but also the explicit goal of the BAT program. *See Chevron, U.S.A., Inc.* v. *NRDC*, 467 U.S. 837, 843–44 (1984).

Moving toward the elimination of pollutant discharges in stages is also consistent with overarching structure of the effluent limitations guidelines program. Congress originally envisioned that the sequence of attaining BPT limits in 1977 and BAT limits in 1983 would result in "levels of control which approach and achieve the elimination of the discharge of pollutants." Statement of Sen. Muskie (Oct. 4, 1972), *reprinted in* 1972 Legislative History, at 170. This two-step approach produced dramatic improvements in water quality, but did not achieve the elimination of pollutant discharges. Therefore, EPA periodically revisits and revises its effluent limitations guidelines with the intention each time of making further progress toward the national goal. (This is the sixth effluent limitations guideline promulgated for the pulp and paper industry, and the fourth applicable to bleached papergrade kraft and soda mills.) Achieving these incremental improvements through successive rulemakings carries a substantial cost, however. The effluent guideline rulemaking process is highly complex, in large part because of the massive record compiled to inform the Agency's decisions and because of the substantial costs associated with achieving each additional increment of environmental improvement. By promulgating these Voluntary Advanced Technology BAT limitations today as a package of incremental environmental improvements, EPA hopes to achieve the goals that Congress envisioned for the BAT program at considerably less cost: one rulemaking that looks both at the present and well into the future. Mills willing to surpass today's compulsory BAT requirements have a framework to anticipate what could be tomorrow's subcategory-wide BAT and to make today's environmental, financial and engineering judgments accordingly. Thus, the three-tiered incentives program itself represents reasonable further progress toward the goal of eliminating pollutant discharges. At the same time, within each Tier, mills must make incremental improvements that also represent reasonable further progress toward that national goal. In short, each BAT increment, whether in the form of the Tiers themselves or the progressively more stringent limitations comprising them, gives contemporary meaning to the staging process originally envisioned by Congress as the means to achieve the goal of eliminating discharge of pollutants to the Nation's waters.

Finally, like other agencies, EPA has inherent authority to phase in regulatory requirements in appropriate cases. EPA has employed this authority in other contexts. For example, EPA recently phased in, over two years, TSCA rules pertaining to lead-based paint activities. *See* 40 CFR 746.239 and 61 FR 45788, 45803 (Aug. 29, 1996). Similarly, the Occupational Safety and Health Administration phased in, over 10 years, a series of progressively more stringent lead-related controls. See 29 CFR 1910.1025 (1979 ed.). Indeed, in upholding that rule, the U.S. Court of Appeals for the D.C. Circuit noted that "the extremely remote deadline at which the [sources] are to meet the final [permissible exposure limits] is perhaps the single most important factor supporting the feasibility of the standard." *United Steelworkers of America* v. *Marshall*, 647 F.2d at 1278.

EPA is aware that CWA sections 301(b)(2)(C) & (D) require BAT limits to be achieved "in no case later than three years after the date such limits are promulgated under section 304(b), and in no case later than March 31, 1989." (Section 301(b)(2)(F), which refers to BAT limitations for nonconventional pollutants, also contains the March 31, 1989 date, but uses as its starting point the date the limitations are "established.") This language does not speak to the precise question EPA confronts here: whether EPA can

promulgate Voluntary Advanced Technology BAT limitations that are phased in over time, so that a direct discharger at all times is subject to and must comply immediately with the particular BAT limitations applicable to them at any given point in time. Section 301(b)(2) provides no clear direction. EPA therefore is charged with making a reasonable interpretation of the statute to fill the gap. *See Chevron, U.S.A., Inc.* v. *NRDC,* 467 U.S. at 843–44. EPA believes that subjecting mills who voluntarily enroll in the Voluntary Advance Technology Incentives Program to progressively more stringent BAT limitations over time best serves Congress' intent of pushing mills to achieve reasonable further progress toward eliminating all pollutant discharges. It also ensures that mills achieve these superior performance requirements at a pace that makes technical and economic sense. Finally, by phasing in these highly stringent—but elected—controls, EPA hopes to encourage more mills to surpass the BAT baseline, with the result that the environment realizes a far greater improvement than EPA could expect to see without this phased approach. For these reasons, EPA believes it is entitled to deference in its decision to promulgate Voluntary Advanced Technology BAT limits in this manner.

Several commenters supported the idea of phasing in compliance with BAT limitations for the purpose of minimizing short-term economic impacts on mills, but urged EPA to adopt this approach to set baseline BAT limits based on the model Tier I Advanced Technology (i.e., BAT Option B). In other words, these commenters argued that more stringent baseline BAT limits based on the Tier I technology would be economically achievable for the entire subcategory because affected mills would have five years to achieve full compliance. As noted above, EPA agrees that The Advanced Technologies that are not economically achievable at present can become economically achievable for individual mills that voluntarily participate as time passes. Indeed, Congress recognized as much in requiring EPA to review its effluent guidelines and to revise them as appropriate. See CWA section 304(b). However, EPA disagrees that it currently has sufficient basis on the record available today to compel all mills in the Bleached Papergrade Kraft and Soda subcategory to meet the more stringent limits five years from now. In this rulemaking, the economic achievability of those more stringent (Tier I) limits is determined by the voluntary investment decisions of the affected mills; because of the voluntary nature of the Advanced Technology Incentives Program, it is the mills, not EPA, that determine that particular Advanced Technologies are available and economically achievable for them within the time frames provided in this program. In order for EPA to impose Advanced Technology limits on the entire subcategory as the commenter suggests, EPA would need to find adequate support in the rulemaking record today that compulsory BAT limits will be economically achievable for their entire subcategory five years from now. EPA cannot make that determination based on the information available today. At best, EPA could only speculate whether some or all of the mills projected to sustain the most severe economic impacts if BAT Option B is selected would be able to avoid those impacts if compliance with that BAT is deferred. EPA does not believe that this type of speculation is a sufficient basis for compelling compliance with BAT limits that are not economically achievable today for the subcategory as a whole. Moreover, when EPA estimated the effects of deferring compliance, subcategory-wide, for five years in response to these comments, EPA concluded that the projected impacts were such that, even then, BAT Option B would not be economically achievable for the subcategory as a whole. See Section VI.B.5.a(5). For these reasons, EPA concludes that it does not have a sufficient record basis today to make Tier I (or BAT Option B) limitations the compulsory baseline BAT even if such limits would not be effective until 2002. See DCN 14392, and CBI documents DCN 14390 and DCN 14391.

EPA could have accomplished the same results in this rulemaking simply by deferring the effective dates of the ultimate Advanced Technology performance objectives until the dates specified in the rule for achievement of the "stage 2" limitations. EPA has the legal authority to defer the effective dates of the "stage 2" portion of the Advanced Technology BAT limitations in this manner. Subject to the minimum delays imposed by the APA, 5 U.S.C. § 553(d), and the Small Business Regulatory Enforcement Fairness Act (SBREFA), 5 U.S.C. § 801, EPA has inherent authority to determine the effective date of a rule and to defer the effective date in appropriate cases. *See ASG Industries, Inc.* v. *Consumer Products Safety Comm'n,* 593 F.2d 1323, 1335 (D.C. Cir. 1979). Nothing in the Clean Water Act limits this authority with respect to BAT effluent limitations guidelines. In contrast to section 306(b)(1)(B), where Congress explicitly stated that new source performance standards, "or revisions thereof, shall become effective upon promulgation," the CWA is silent regarding the effective date of BAT effluent limitations guidelines. Having failed to prescribe when BAT guidelines become effective, Congress therefore has delegated to the Agency the authority to choose the appropriate effective date of the BAT effluent guideline limitations it promulgates, so long as the Agency's choice is consistent with the goals and purposes of the Act. *See Chevron, U.S.A., Inc.* v. *NRDC,* 467 U.S. at 843–44, 861. Under this approach, the "stage 1" limitations would be effective immediately, and the "stage 2" limitations would become effective by the dates specified in the regulation.

B. Incentives Available After Achievement of Advanced Technology BAT Limitations and NSPS

1. Greater Certainty Regarding Permit Limits and Requirements

Industry stakeholders have suggested to EPA that mills could be encouraged to implement advanced technologies if they had a reasonable assurance that all limitations and conditions in their permits would remain constant over a specified period of time, once compliance with the Advanced Technology limits and standards is achieved.

Under this incentive, EPA will issue guidance to states regarding the reissuance of NPDES permits held by mills that achieve all of their Advanced Technology BAT limitations or NSPS. (EPA notes that new sources that accept permit limitations based on, and commence operation in compliance with, Tier II or Tier III NSPS automatically possess a shield against more stringent standards of performance for ten years from the completion of construction.)

In its forthcoming guidance, EPA will address the timing of reissuing Advanced Technology NPDES permits and the limitations those reissued permits should contain. Regarding the reissuance of Advanced Technology NPDES permits, EPA believes that permitting authorities could reasonably conclude that an Advanced Technology NPDES permit held by a mill meeting all of its Tier limits is a low priority for permit reissuance, if there is no new water quality- or facility-related data or information that would justify new or different limits. Under these circumstances, EPA believes it would be reasonable for a permitting authority to

conclude that that permit is a lower priority for reissuance because the mill is voluntarily achieving reductions greater than otherwise required by the baseline BAT and hence presents a lower risk to water quality than other mills.

In its guidance, however, EPA will emphasize that an Advanced Technology NPDES permit should be administratively extended only if the permitting authority had provided the public with notice (the last time the permit was reissued) that it might choose to extend the permit administratively when it expires. Thus, EPA expects the permitting authority to notify the public as part of the preceding permitting process of the circumstances under which it would regard the Advanced Technology NPDES permit as a low priority for reissuance in the next permitting cycle. For example, EPA expects the permitting authority to inform the public that the permit probably would be administratively extended if the permittee has achieved all of its Advanced Technology limitations, if it has filed a timely permit application, and if the permitting authority possesses no new water quality or facility-related data that would justify new or different permit conditions and limits. In addition, EPA expects that the permit eligible for an administrative extension would contain BMPs and any water quality-based effluent limits necessary to achieve applicable water quality standards. Thus, EPA would not expect any adverse effect on the environment during the period the permit is administratively extended, in the absence of specific information indicating that more stringent water quality effluent limits need to be imposed.

The forthcoming guidance will also address the types of limitations an Advanced Technology NPDES permit should contain when it is reissued after achievement of the Tier limitations. As a threshold matter, the permitting authority will need to determine if there is a need for new or revised water quality-based effluent limitations. If there is none, EPA encourages permitting authorities to promptly reissue the NPDES permit with the existing water quality-based effluent limitations, if any, and the appropriate limitations found in 40 CFR Part 430. In some cases, the permitting authority may receive new facility- or watershed-specific information indicating that load reductions and, consequently, more stringent effluent limits on a pollutant in the mill's wastewater are necessary to achieve applicable water quality standards for that pollutant. Under these circumstances, EPA would urge states to develop priorities for allocating the necessary load reductions in a way that gives preference to Advanced Technology mills over all other Subpart B mills, particularly where Advanced Technology mills contribute a small portion of the total pollutant loads to the stream. Moreover, where more than one Advanced Technology mill discharges in a watershed, these priorities would further give preference first to Tier III mills, then to Tier II, and finally to Tier I mills.

2. Reduced Effluent Monitoring

EPA believes that reduced monitoring provisions are appropriate for ECF and TCF mills participating in the Voluntary Advanced Technology Incentives Program and is including them in the today's regulation for mills that achieve Voluntary Advanced Technology BAT Limitations or NSPS, as appropriate. See 40 CFR 430.02(c), (d) and (e). In EPA's view, consistent and successful implementation of the Advanced Technologies through ECF or TCF processes will make it increasingly less likely that the pollutants controlled by the baseline BAT will be present in the wastewater from Advanced Technology fiber lines in levels of concern. Because of these reductions and because monitoring for these pollutants tends to be costly, EPA believes it is reasonable to allow mills achieving the Voluntary Advanced Technology BAT limitations or NSPS through ECF or TCF processes to monitor less frequently for those pollutant parameters over time after establishing a reliable baseline of consistent achievement of those Advanced Technology BAT limitations or NSPS. See 40 CFR 430.02(c)–(e). To qualify for a monitoring incentive, the mill must certify that the fiber line is TCF or Advanced ECF either as part of their permit application or as part of a report of progress on compliance with milestones established to achieve their ultimate Tier limits. 40 CFR 430.02(c).

No monitoring incentive is available for kappa number or flow because no minimum monitoring frequencies are being established by this regulation. EPA encourages permitting authorities to consider factors such as the reliability of the Advanced Technology to consistently achieve or exceed the applicable limitations and performance variability in establishing monitoring frequencies for kappa number and flow on a best professional judgment basis.

The monitoring incentive for AOX applies only when the entire mill is ECF or TCF. See 40 CFR 430.02(c) and (d). Since compliance with AOX most likely will be determined at the end of the pipe, the monitoring requirement would be governed by the fiber line for which most frequent monitoring is required.

EPA retains the authority to request or obtain specific information that may be needed to determine compliance with the requirements of this rule. Because monitoring relief is specified to be available by the date compliance is required, even if the limits have not been achieved, EPA anticipates that permitting authorities will exercise their Section 308 authority to extend more frequent monitoring for mills that do not achieve compliance with their limitations.

EPA relies on section 308(a) of the Clean Water Act for authority to promulgate this incentive. The reduced monitoring for this effluent limitations guideline incentive program is being incorporated in the *Code of Federal Regulations,* and is summarized as follows:

a. For TCF fiber lines under Tiers I, II, and III, no monitoring incentive is available because no existing TCF fiber line is subject to minimum monitoring frequencies established by this rule. See 40 CFR 430.02(a). EPA anticipates that permitting authorities will consider the monitoring for AOX being imposed on mills in comparable Tiers, and the additional assurance of compliance that TCF process technologies afford relative to AOX, in establishing monitoring frequencies on a best professional judgment basis. For mills that use TCF processes part of the time and ECF processes for the remainder, EPA would apply the reduced monitoring incentive applicable to an ECF process. See 40 CFR 430.02(c), (d) and (e).

b. For any fiber line enrolled under Tier I, II, or III for which the mill certifies in its NPDES permit application or other communication to the permitting authority that it employs exclusively Advanced ECF technologies (i.e., extended delignification or other technologies that achieve at least the Tier I performance levels specified in Section 430.24(b)(4)(i)), the minimum monitoring requirements for dioxin, furan, chloroform and the 12 chlorinated phenolic pollutants will be suspended after one year of monitoring following achievement of those limitations and standards. See 40 CFR 430.02(c). (These limitations and standards must be achieved no later than April 15, 2004. See 40 CFR 430.24(b)(3).) For AOX, a certifying Advanced ECF mill also would be permitted to perform weekly instead of daily monitoring for one year after achievement of the ultimate Tier BAT limit or NSPS for that pollutant. See 40

CFR 430.02(d). Monitoring for AOX once per month would be permitted for Tier I ECF mills for four years beyond the completion of that one year period. See 40 CFR 430.02(e). Tier II ECF mills would be permitted to monitor for AOX once per quarter for four years beyond the completion of that one year period, and Tier III ECF mills would be permitted to monitor for AOX once per year for four years beyond the completion of that one year period. *Id.*

3. Reduced Inspections

EPA will issue guidance to EPA Regional Offices indicating that fiber lines enrolled in the Voluntary Advanced Technology Incentives Program and achieving Voluntary Advanced Technology BAT limitations or NSPS should be a lower priority than other NPDES facilities for routine inspections under the CWA. Under this incentive, the guidance would recommend that fiber lines achieving Tier I limits receive routine EPA inspections not more than once every two years; fiber lines achieving Tier II limits receive routine EPA inspections not more than twice every five years; and fiber lines achieving Tier III limits receive routine EPA inspections not more than once every five years. This incentive reflects EPA's view that mills installing and operating Advanced Technologies at levels to meet the appropriate tier effluent limitations and standards are likely to be complying with the other permit requirements applicable to that fiber line. Furthermore, the substantial reductions in pollutants and wastewater volumes discharged, particularly by mills achieving Tier II and Tier III limitations and standards, will have commensurately reduced environmental impacts. EPA already has redirected Federal NPDES inspections away from annual inspections of all major dischargers to focus on high risk facilities in priority watersheds. Targeted efforts in these priority watersheds focus on such factors as facility compliance status and rates, location and affected population, citizen complaints, etc. Nonetheless, under this incentive, EPA reserves the authority to conduct multi-media inspections without prior notice, and to inspect Advanced Technology fiber lines for cause, whether or not there is an ongoing violation. EPA also reserves its right to inspect an Advanced Technology mill in connection with specific watershed or airshed concerns.

4. Public Recognition Programs

EPA is pleased to have the opportunity to implement a program in which it can recognize facilities for voluntary activities that achieve further environmental improvements beyond those required by the baseline BAT limitations and NSPS promulgated today. EPA's intention is to provide for easily administered and meaningful public recognition for mills that participate in the Voluntary Advanced Technology Incentives Program. EPA will accord public recognition to mills when they formally enroll in the Program, when they achieve major interim milestones, and when they achieve the ultimate Tier performance requirements. The applicable state permitting authority also may choose to separately recognize a pulp and paper mill for its commitments and achievements toward further environmental improvements. The following paragraphs describe the steps for public recognition. EPA will issue additional guidance to facilitate implementation of this incentive.

a. Enrolling in the Voluntary Advanced Technology Incentives Program. Once a mill has enrolled in the Voluntary Advanced Technology Incentives Program, EPA will issue a letter to each facility acknowledging its participation and identifying the tier limits (and fiber line(s) as appropriate) to which the mill has committed. Each year EPA will publish a **Federal Register** notice identifying mills that have committed to the program within the previous year. The self-selected Tier will be clearly identified, as will any other pertinent information. The **Federal Register** notice will be made available on the EPA Internet web site.

b. Achievement of Milestones. Each time a mill achieves a major milestone (particularly those which achieve reduction in effluent pollutant loadings), EPA will recognize that mill in its annual **Federal Register** notice. In order to qualify for this recognition, each mill must notify its permitting authority and provide supporting monitoring data or other relevant documentation. The permitting authority may choose to visit the site for verification. EPA, in concert with the relevant state NPDES programs, also will then ascertain the status of Clean Water Act compliance and any other enforcement actions prior to public recognition activities. Any criminal enforcement activities, particularly convictions, also will be ascertained. This information on compliance and enforcement status will be available for consideration by EPA senior management prior to initiation of public recognition activities. Relevant information on enforcement and compliance status also may be shared as appropriate with senior management of state permitting agencies that initiate separate public recognition activities. Public recognition for achieving milestones will continue until the date participating mills are required to achieve the ultimate Tier performance requirements.

c. Achievement of Voluntary Advanced Technologies BAT Limitations or NSPS. Mills that achieve their Advanced Technology BAT Limitations or NSPS will notify the permitting authority and submit supporting monitoring data and other relevant documentation. The permitting authority will verify that the Advanced Technology BAT Limitations or NSPS have been achieved. The annual **Federal Register** notice will identify these facilities as reaching their goal. EPA also will participate in an award ceremony at an appropriate venue (e.g., TAPPI Environmental Conference).

5. Reduced Penalties

In recognition of the considerable capital expenditures that mills participating in the Voluntary Advanced Technology Incentives Program will make to implement Advanced Technologies and to achieve pollutant reductions superior to those achievable through the baseline BAT or NSPS, EPA will encourage enforcement authorities to take into account those investments as appropriate when assessing penalties against these mills for violations relating to those Advanced Technologies. Existing EPA settlement policies provide consideration of Advanced Technology investments in this manner. In EPA's view, if a facility has installed and is operating the Advanced Technology in good faith, reports violations in a prompt manner to EPA or the State, and either corrects the violations in a timely manner or agrees to and complies with reasonable remedial measures concurred on by the primary enforcement authority, then the enforcement authority would be justified in taking the Advanced Technology investment into account in determining economic benefit and in reducing the gravity portion of the penalty by up to 100 percent. Where the installation and operation of any Advanced Technology was more expensive than the installation and operation of the technology underlying the baseline BAT, the Advanced Technology facilities would derive no economic benefit (i.e., zero BEN) from the violation associated with the Advanced Technology. This would be the case even when the Advanced Technology fails, as long as the design, operation and installation are within

applicable engineering standards and operational procedures are within industry norms. The decision whether to take such Advanced Technology investments into account in determining economic benefit would be left to the State's discretion when the State is the enforcing authority. EPA will issue guidance to clarify application of this incentive.

Mills also can take advantage of the recently issued audit policy providing they meet the criteria specified in that policy. See 60 FR 66706 (Dec. 22, 1995).

X. Administrative Requirements and Related Government Acts or Initiatives

A. Dockets

The docket is an organized and complete file of all the information submitted to or otherwise considered by EPA in the development of the final regulations. The principal purposes of the docket are: (1) To allow interested parties to readily identify and locate documents so that they can intelligently and effectively participate in the rulemaking process; and (2) to serve as the record in case of judicial review, except for intra-agency review materials as provided for in section 307(d)(7)(A).

1. Air Dockets

Air Docket No. A–92–40 contains information considered by EPA in development of the NESHAP for the chemical wood pulping mills. Air Docket No. A–95–31 contains information considered in developing the NESHAP for mechanical pulping processes, secondary fiber pulping processes, and nonwood fiber pulping processes. The Air Dockets are available for public inspection between 8 a.m. and 4 p.m., Monday through Friday except for Federal holidays, at the following address: U.S. Environmental Protection Agency, Air and Radiation Docket and Information Center (MC–6102), 401 M Street SW, Washington, DC 20460; telephone: (202) 260–7548. The dockets are located at the above address in Room M–1500, Waterside Mall (ground floor). All comments received during the public comment period on the 1993 proposed NESHAP are contained in the Pulp and Paper Water Docket (see following paragraph for location). Comments received on the March 8, 1996, supplemental NESHAP notice at 61 FR 9383 are contained in Air Dockets A–92–40 and A–95–31.

2. Water Docket

The complete public record for the effluent limitations guidelines and standards rulemaking, including EPA's responses to comments received during the rulemaking, is available for review at EPA's Water Docket, Room M2616, 401 M Street SW, Washington, DC 20460. For access to Docket materials, call (202) 260–3027. The Docket staff requests that interested parties call between 9:00 am and 3:30 pm for an appointment before visiting the docket.

The EPA regulations at 40 CFR Part 2 provide that a reasonable fee may be charged for copying materials from the Air and Water Dockets.

EPA notes that many documents in the record supporting these final rules have been claimed as confidential business information (CBI) and, therefore, are not included in the record that is available to the public in the Air and Water Dockets. To support the rulemaking, EPA is presenting certain information in aggregated form or is masking facility identities to preserve confidentiality claims. Further, the Agency has withheld from disclosure some data not claimed as confidential business information because release of this information could indirectly reveal information claimed to be confidential.

B. Executive Order 12866 and OMB Review

Under Executive Order 12866, (58 *FR* 51735, October 4, 1993), the Agency must determine whether the regulatory action is "significant" and therefore subject to OMB review and the requirements of the Executive Order. The Order defines "significant regulatory action" as one that "is likely to result in a rule that may: (1) Have an annual effect on the economy of $100 million or more or adversely affect in a material way the economy, a sector of the economy, productivity, competition, jobs, the environment, public health or safety, or State, local, or tribal governments or communities; (2) create a serious inconsistency or otherwise interfere with an action taken or planned by another agency; (3) materially alter the budgetary impact of entitlements, grants, user fees, or loan programs or the rights and obligations of recipients thereof; or (4) raise novel legal or policy issues arising out of legal mandates, the President's priorities, or the principles set forth in the Executive Order."

Pursuant to the terms of Executive Order 12866, it has been determined that the Cluster Rules are a "significant regulatory action" because they will have an annual effect on the economy of $100 million or more. As such, this action was submitted to OMB for review. Changes made in response to OMB suggestions or recommendations are documented in the public record.

C. Regulatory Flexibility Act and the Small Business Regulatory Enforcement Fairness Act of 1996 (SBREFA)

Under the Regulatory Flexibility Act (RFA), 5 U.S.C. 601 *et seq.*, as amended by SBREFA, EPA generally is required to conduct a regulatory flexibility analysis describing the impact of the rule on small entities. However, under section 605(b) of the RFA, EPA is not required to prepare the regulatory flexibility analysis if EPA certifies that the rule will not have a significant economic impact on a substantial number of small entities.

Pursuant to section 605(b) of the RFA, the Agency certifies that today's final CWA rule will not have a significant economic impact on a substantial number of small entities. In addition, EPA also finds that the final CAA rule will not have a significant economic impact on a substantial number of small entities. Small entities, as defined, include small businesses, small governments, and small organizations. This rulemaking does not affect small organizations. For small governments, these rules could directly affect administration or operating costs, but are not expected to result in significant impacts (see Section X.E.). Small businesses are the remaining class of small entity affected by this rulemaking. For small businesses, EPA examined the economic impacts of these rules in detail and the results of its analysis are found in the "Economic Analysis" (see DCN 14649). The following is a brief summary of the analysis.

Today's CWA final rule will not have a significant economic impact on a substantial number of small entities, because of those companies affected by the CWA rule, only four are "a small business concern" as defined by SBA regulations. (The RFA, in general, requires use of SBA definitions of small businesses; for this regulation, small businesses are defined as firms employing no more than 750 workers.) EPA does not believe this is a substantial number of small entities as that term is used in the RFA. Moreover, while all four small business concerns would experience increased costs of operation as a result of today's rule, the costs of complying with the rule are also not significant. As a measure of the economic impact of today's requirements on a small entity, EPA evaluated the costs of the rule relative to the company's annual revenues. The cost of the rule only exceeded one percent of revenues for one of the facilities and in no case did it exceed three percent.

When the costs of the CWA rule are considered in combination with the costs of the final CAA MACT I and MACT III rules, EPA's conclusion does not change. EPA's analysis showed that the combined costs of achieving compliance with the final air and water rules will not have a significant economic impact on a substantial number of small entities. As noted above, the CWA rule affects only four small entities. Further, the combined costs of the rules only exceeded one percent of revenues for one of the four small entities covered by both the final air and water rules, and for no small entity did it exceed three percent. Even though this is a small cost, because of the poor pre-existing economic conditions at one facility, EPA projects that one facility owned by one of the small firms may close as a result of the combined final CWA and CAA rules. EPA has determined that one closure is not a significant economic impact on a substantial number of small business concerns.

Though not required by the RFA, EPA also examined the costs of the final CWA rule in combination with the costs of the final MACT I and MACT III and proposed MACT II rules. EPA's analysis showed that the combined costs of achieving compliance with the final air and water rules and the proposed MACT II rule would not have a significant economic impact on a substantial number of small entities. As stated before, only four small entities would be affected. The combined cost of the rules would only exceed one percent of revenues for two small entities and for no small entity covered by both the final air and water rules and the proposed air rule would it exceed three percent. Even though this is a small cost, because of the poor pre-existing economic conditions at one facility, EPA projects that one facility owned by one of the small firms may close as a result of the final CWA and final and proposed CAA rules.

EPA's assessment of the impacts on small businesses subject to the final CAA rules yields similar results. EPA evaluated the impacts of the costs of the final MACT I and MACT III rules on small businesses. Of the companies affected by the two CAA rules, only 11 meet the SBA definition of "a small business concern." EPA does not believe this is a substantial number of small entities as that term is used in the RFA. EPA has also examined the extent of the impact on those 11 companies and finds that the costs of complying with the final MACT I rule and the final MACT III rule will not have a significant economic impact on a substantial number of small entities. In evaluating the costs of the rules relative to the company's annual revenues, EPA's analysis shows that no company is estimated to incur costs in excess of one percent of its revenues as a result of implementing the final MACT I and MACT III rules. As a consequence, EPA finds that the CAA rule does not have a significant economic impact on a substantial number of small entities.

When the costs of the final MACT I and MACT III rules are considered in combination with the costs of the final CWA rule, EPA's analysis shows that the combined costs of achieving compliance with the final air and water rules is still not a significant impact on a substantial number of small entities. As discussed, only 11 small business concerns must comply with the CAA rule. Of these, only four will experience additional costs due to the CWA rule. The combined costs of the rules only exceeded one percent of revenues for one small entity covered by both the air and water rules, and for no small entity did it exceed three percent. Even though this is a small cost, because of the poor pre-existing economic conditions at one facility, EPA projects that one facility owned by one of the small firms may close as a result of the combined final CWA and CAA rules.

Though not required by the RFA, EPA also assessed the cumulative economic effect on small entities if the proposed MACT rule is adopted. EPA's conclusion that costs to small entities are not great does not change when the costs of the final and proposed MACT rules are combined with the costs of the final CWA rule. The combined cost of the rules would only exceed one percent of revenues for two small entities covered by both the final air and water rules and the proposed air rule, and for no small entity would it exceed three percent. Even though this is a small cost, because of the poor pre-existing economic conditions at one facility, EPA projects that one facility owned by one of the small firms may close as a result of the combined final CWA and CAA rules.

D. Paperwork Reduction Act

The information collection requirements in the air emissions rules have been submitted for approval to the Office of Management and Budget (OMB) under the *Paperwork Reduction Act,* 44 U.S.C. 3501 *et seq.* An Information Collection Request (ICR) document has been prepared by EPA (ICR No. 1657.02), and a copy may be obtained from Sandy Farmer, OPPE Regulatory Information Division; U.S. Environmental Protection Agency (2137); 401 M St., SW.; Washington, DC 20460 or by calling (202) 260–2740. The information requirements are not effective until OMB approves them.

The information required to be collected by the air emission rules is needed as part of the overall compliance and enforcement program. It is necessary to identify the regulated entities who are subject to the rule and ensure their compliance with the rule. The recordkeeping and reporting requirements are mandatory and are being established under section 114 of the Clean Air Act.

There are approximately 490 respondents that are potentially affected by the air emission rules. All 490 respondents must submit an initial applicability notification. Of the 490 affected respondents, there would be an estimated 155 respondents required to perform additional information collection. For the 155 respondents, this collection of information has an estimated total annual recordkeeping and reporting burden averaging 320 hours per respondent during the first three years after promulgation. For the 155 respondents, the average annualized cost of the reporting and recordkeeping burden per respondent is $29,600 for the first three years following promulgation.

The recordkeeping and reporting burden means the total time, effort, or financial resources expended by persons to generate, maintain, retain, or disclose or provide information to or for a Federal agency. This includes the time needed to review instructions; develop, acquire, install, and utilize technology and systems for the purposes of collecting, validating, and verifying information, processing and maintaining information, and disclosing and providing information; adjust the existing ways to comply with any previously applicable instructions and requirements; train personnel to be able to respond to a collection of information; search data sources; complete and review the collection of information; and transmit or otherwise disclose the information.

Specifically, the estimated 155 respondents must submit performance test notifications, statements of compliance, and semi-annual reports of monitored parameters. The 155 respondents must also conduct performance tests. If compliance exceedances occur, respondents must submit quarterly excess emissions reports. This information will be used to demonstrate compliance with the NESHAP.

Send comments on the Agency's need for this information, the accuracy of the

provided burden estimates, and any suggested methods for minimizing respondent burden, including through the use of automated collection techniques to the Director, OPPE Regulatory Information Division; U.S. Environmental Protection Agency (2137); 401 M St., SW; Washington, DC 20460; and to the Office of Information and Regulatory Affairs, Office of Management and Budget, 725 17th St., NW, Washington, DC 20503, marked "Attention: Desk Officer for EPA." Include the ICR number in any correspondence.

The effluent limitation guidelines and standards promulgated today contain two distinct information collection activities, i.e., specified monitoring requirements, see 40 CFR 430.02, and development of BMP plans and related monitoring, see 40 CFR 430.03(c)(4), (c)(5), (c)(10), (d), (e), (f), (g), (h) and (i)(4). EPA will seek approval of these information collection requirements from the Office of Management and Budget (OMB) under the Paperwork Reduction Act, 44 U.S.C. 3501 *et seq.*, as follows. EPA will seek to amend the NPDES Discharge Monitoring Report ICR No. 229, OMB approval number 2040–0004, expiration May 31, 1998, to add specified monitoring requirements for direct dischargers. EPA will seek to add the specified monitoring requirements for indirect dischargers by amending the National Pretreatment Program ICR No. 2, OMB approval number 2040–0009, prior to its expiration on October 31, 1999. EPA will seek approval of the Best Management Practices ICR No. 1829.01 for the requirements pertaining to BMP plans and associated monitoring. EPA's burden estimates for the BMP ICR are presented for comment in a document published elsewhere in today's **Federal Register**.

An Agency may not conduct or sponsor, and a person is not required to respond to, a collection of information unless it displays a currently valid OMB control number. The OMB control numbers for EPA's regulations are listed in 40 CFR parts 9 and 48 CFR chapter 15.

In addition, direct discharging mills continue to be required, under 40 CFR 122.21, to submit certain information as part of their application for an NPDES permit. Indirect discharging mills, in turn, must submit industrial user reports and periodic reports regarding compliance with categorical pretreatment standards under 40 CFR 403.12(b), (d), and (e). The effluent limitations guidelines and standards being promulgated today do not change those requirements. EPA notes that mills that describe their process as TCF or ECF under 40 CFR 122.21(g)(3) or 40 CFR 403.12(b), (d), or (e) as applicable, supply corroborating data if requested by the permitting authority under 40 CFR 122.21(g)(13), and comply with the signatory and certification requirements in 40 CFR 122.22 or 40 CFR 403.12(l) as applicable will be deemed to have certified their process as TCF or ECF. In addition, direct discharging mills that indicate under 40 CFR 122.21(g)(3) and (g)(13) their desire to participate in the Advanced Technology Incentives Program and comply with the signatory and certification requirements in 40 CFR 122.22 or 40 CFR 122.23, whichever is applicable, will be deemed to have enrolled in the Advanced Technology Incentives Program. In both cases, this information will determine the types of technology-based effluent limitations and standards and the types of monitoring requirements, if any, they will receive. OMB has approved the existing information collection requirements associated with NPDES discharge permit applications and industrial user reports under the Paperwork Reduction Act, 44 U.S.C. 3501, *et seq.* OMB has assigned OMB control number 2040–0086 to the NPDES permit application activity and OMB control numbers 2040–0009 and 2040–0150 to the reporting and certification requirements for industrial users. Nothing in today's rule changes the burden estimates for these ICRs.

All information submitted to the EPA for which a claim of confidentiality is made will be safeguarded according to the EPA policies set forth in Title 40, Chapter 1, Part 2, Subpart B—Confidentiality of Information (see 40 CFR part 2; 41 FR 36902, September 1, 1976; amended by 43 FR 39999, September 8, 1978; 43 FR 42241, September 28, 1978; 44 FR 17674, March 23, 1979).

E. Unfunded Mandates Reform Act

Title II of the Unfunded Mandates Reform Act of 1995 (UMRA), P.L. 104–4, establishes requirements for Federal agencies to assess the effects of their regulatory actions on State, local, and tribal governments and the private sector. Under section 202 of the UMRA, EPA generally must prepare a written statement, including a cost-benefit analysis, for proposed and final rules with "Federal mandates" that may result in expenditures to State, local, and tribal governments, in the aggregate, or to the private sector, of $100 million or more in any one year. Before promulgating an EPA rule for which a written statement is needed, section 205 of the UMRA generally requires EPA to identify and consider a reasonable number of regulatory alternatives and adopt the least costly, most cost-effective or least burdensome alternative that achieves the objectives of the rule. The provisions of section 205 do not apply when they are inconsistent with applicable law. Moreover, section 205 allows EPA to adopt an alternative other than the least costly, most cost-effective or least burdensome alternative if the Administrator publishes with the final rule an explanation why that alternative was not adopted. Before EPA establishes any regulatory requirements that may significantly or uniquely affect small governments, including tribal governments, it must have developed under section 203 of the UMRA a small government agency plan. The plan must provide for notifying potentially affected small governments, enabling officials of affected small governments to have meaningful and timely input in the development of EPA regulatory proposals with significant Federal intergovernmental mandates, and informing, educating, and advising small governments on compliance with the regulatory requirements.

EPA has determined that today's final rules contain a Federal mandate that may result in expenditures of $100 million or more for the private sector in any one year. Accordingly, EPA has prepared the written statement required by section 202 of the UMRA. This statement is contained in the Economic Analysis for the rule (DCN 14649) and other support documents and is summarized below. In addition, EPA has determined that the rules contain no regulatory requirements that might significantly or uniquely affect small governments and therefore are not subject to the requirement of section 203 of the UMRA. The reasons for this finding are set forth below.

EPA prepared several supporting analyses for the final rules. Throughout this preamble and in those supporting analyses, EPA has responded to the UMRA section 202 requirements. Considerations with respect to costs, benefits, and regulatory alternatives are addressed in the Economic Analysis (DCN 14649), which is summarized in Section VIII of this preamble. A very brief summary follows.

The statutory authorities for these rules are found in section 112 of the CAA and multiple sections of the CWA (see Section I for a list). In part, these sections of the statutes authorize and direct EPA to issue regulations and standards to address air emissions and effluent discharges.

EPA prepared a qualitative and quantitative cost-benefit assessment of

the federal requirements imposed by today's final rules. In large part, the private sector, not other governments, will incur the costs. Specifically, the costs of this federal mandate are compliance costs to be borne by the regulated pulp and paper mills. In addition, although some States and local governments will incur costs to implement the standards, these costs to governments will not exceed the thresholds established by UMRA. The final rules are not expected to result in significant or unique impacts to small governments; the requirements are consistent with established and already-operating implementation programs.

EPA estimates that the total annualized costs for the private sector to comply with the federal mandate are $351 million (pre-tax)/$229 million (post-tax). The mandate's benefits are primarily in the areas of reduced health risks and improved air and water quality. The Economic Analysis (DCN 14649) describes, qualitatively, many such benefits. The analysis then quantifies a subset of the benefits and, for a subset of the quantified benefits, EPA monetizes (i.e., places a dollar value on) selected benefits. EPA's estimates of the monetized benefits for the final rules are in the range of $39 to $403 million.

EPA does not believe that there will be any disproportionate budgetary effects of the rules on any particular areas of the country, particular types of communities, or particular industry segments. EPA's basis for this finding is its analysis of economic impacts, which is summarized in Section VIII of the preamble and in the Economic Analysis (DCN 14649). A key feature of that analysis is the estimation of financial impacts for each facility incurring compliance costs. EPA considered the costs, impacts, and other effects for specific regions and individual communities, and found no disproportionate budgetary effects. Although these final rules apply only to one industry segment, EPA found no disproportionate budgetary effect. (The term segment as used in this context refers to the industrial category of pulp, paper, and paperboard, and not to individual subcategories within that category; it is used differently in other sections of this preamble.) The Economic Analysis (DCN 14649) also describes the rules' effect on the national economy in terms of effects on productivity, economic growth, and international competitiveness; EPA found such effects to be minimal. Although EPA has determined that these rules do not contain requirements that might significantly or uniquely affect any State, local, or tribal governments (see chapter 7), EPA consulted with State and local air and water pollution control officials. These consultations primarily pertained to implementation issues for States and local governments. EPA's evaluation of their comments is reflected in the final rules.

For each regulatory decision in today's rules, EPA has selected the "least costly, most cost effective, or least burdensome alternative" that was consistent with the requirements of the CAA and CWA. This satisfies section 205 of the UMRA. As part of this rulemaking, EPA had identified and considered a reasonable number of regulatory alternatives. Primarily, the regulatory alternatives are manufacturing processes, air emission controls, wastewater discharge controls, and other technologies. Many of the alternatives are described above in Section VI; others are described in supporting documents. The Agency's consideration of alternatives also included an incentives program to encourage bleached papergrade kraft and soda mills to commit to pollution prevention advances beyond the requirements of the federal mandate. See Section IX. The Agency's selection from among these alternatives is consistent with the requirements of UMRA, in terms of cost, cost-effectiveness, and burden. Several sections of the preamble are devoted to describing the Agency's rationale for each regulatory decision (e.g., Sections VI.B.5.a(5) and VI.B.6.b(2)).

Finally, EPA has considered the purpose and intent of the Unfunded Mandates Reform Act and has determined that these rules are needed, not only because of the significant pollutant reductions these rules will achieve, see Section VII, but also to satisfy EPA's obligations under the consent decree in *Environmental Defense Fund and Natural Wildlife Federation* v. *Thomas,* see Section II.C.1.a, and EPA's CAA obligations.

F. Pollution Prevention Act

In the Pollution Prevention Act of 1990 (42 U.S.C. 13101 *et seq.*, Public Law 101–508, November 5, 1990), Congress declared pollution prevention the national policy of the United States. The Pollution Prevention Act declares that pollution should be prevented or reduced whenever feasible; pollution that cannot be prevented or reduced should be recycled or reused in an environmentally safe manner wherever feasible; pollution that cannot be recycled should be treated; and disposal or release into the environment should be chosen only as a last resort.

Today's rules are consistent with this policy. As described in section VI, development of today's rules focused on the pollution-preventing technologies that some segments of the industry have already adopted. Thus, a critical component of the technology bases for today's effluent limitations guidelines and standards are process changes that eliminate or substantially reduce the formation of certain toxic chemicals. EPA also employs process changes as the technology basis for the emission standards.

G. Common Sense Initiative

On August 19, 1994, the Administrator established the Common Sense Initiative (CSI) Council in accordance with the Federal Advisory Committee Act (5 U.S.C. Appendix 2, Section 9 (c)) requirements. A principal goal of the CSI includes developing recommendations for optimal approaches to multimedia controls for industrial sectors including Petroleum Refining, Metal Plating and Finishing, Printing, Electronics and Computers, Auto Manufacturing, and Iron and Steel Manufacturing.

The Pulp and Paper regulations were not among the rulemaking efforts included in the Common Sense Initiative. However, many of the CSI objectives have been incorporated into these final rules, and the Agency intends to continue to pursue these objectives.

H. Executive Order 12875

To reduce the burden of federal regulations on States and small governments, the President issued Executive Order 12875 on October 28, 1993, entitled Enhancing the Intergovernmental Partnership (58 FR 58093). In particular, this executive order requires EPA to consult with representatives of affected State, local, or tribal governments. While these rules do not create mandates upon State, local, or tribal governments, EPA involved State and local governments in their development. Because this regulation imposes costs to the private sector in excess of $100 million, the EPA pursued the preparation of an unfunded mandates statement and the other requirements of the Unfunded Mandates Reform Act. The requirements are met as presented in the unfunded mandate s section above.

I. Executive Order 12898

Executive Order 12898 directs federal agencies to "determine whether their programs, policies, and activities have

disproportionally high adverse human health or environmental effects on minority populations and low-income populations." (Sec.3–301 and Sec. 3–302). In developing the Cluster Rules, EPA analyzed the environmental justice questions raised by these rules. EPA conducted two analyses in 1996 to comply with Executive Order 12898 and to determine human health effects on minority and low-income populations.

First, in a comparison of demographic characteristics, EPA found that there is no significant difference in ethnic makeup or income level of counties where bleached papergrade kraft and soda mills are located when compared to the States in which they are located. In fact, of the twenty-six States with bleached papergrade kraft and soda mills, fifteen States actually have lower minority populations (as a percentage of overall population) in mill counties than in the State as a whole, and sixteen States have a lower percent African-American population in mill counties than in their respective states. Fifteen States have a slightly larger portion of the population living below the poverty line in mill counties (15 percent average) when compared to the State as a whole (14.1 percent average); however, when EPA examined the results statistically, differences examined between mill counties and total State populations were not significant. Therefore, EPA has concluded that the regulatory decisions reflected in today's rules will not have a disproportionately high adverse human health or environmental effect on minority populations or low-income populations.

Second, EPA investigated the fish consumption characteristics of Native American populations downstream from pulp and paper mills. Of the 48 Native American tribes downstream from pulp mills, eight have special subsistence fishing rights. One finding from EPA's analysis is that members of five of these tribes have elevated risks of contracting cancer from consuming fish contaminated by dioxin, when compared to the general population and recreational anglers, because they consume fish at higher levels. EPA expects the final rule to reduce substantially the cancer risks to these tribal populations, as discussed in Chapter 8 of the Economic Analysis (DCN 14649).

J. Submission to Congress and the General Accounting Office

Under 5 U.S.C. 801(a)(1)(A) as amended by the Small Business Regulatory Enforcement Fairness Act of 1996 (SBREFA), EPA submitted a report containing this rule and other required information to the U.S. Senate, the U.S. House of Representatives and the Comptroller General of the General Accounting Office prior to publication of the rule in today's **Federal Register**. This rule is a "major rule" as defined by 5 U.S.C. 804(2).

K. National Technology Transfer and Advancement Act

Under Section 12(d) of the National Technology Transfer and Advancement Act, the Agency is required to use voluntary consensus standards in its regulatory and procurement activities unless to do so would be inconsistent with applicable law or otherwise impractical. Voluntary consensus standards are technical standards (e.g., materials specifications, test methods, sampling procedures, business practices, etc.) which are developed or adopted by voluntary consensus standards bodies. Where available and potentially applicable voluntary consensus standards are not used by EPA, the Act requires the Agency to provide Congress, through the Office of Management and Budget, an explanation of the reasons for not using such standards. This section summarizes EPA's response to the requirements of the NTTAA for the analytical test methods promulgated as part of today's effluent limitations guidelines and standards.

EPA's analytical test method development is consistent with the requirements of the NTTAA. Although the Agency initiated data collection for these effluent guidelines many years prior to enactment of the NTTAA, traditionally, analytical test method development has been analogous to the Act's requirements for consideration and use of voluntary consensus standards. EPA performed extensive literature searches to identify any analytical methods from industry, academia, voluntary consensus standards bodies and other parties that could be used to measure the analytes in today's rulemaking. The results of this search formed the basis for EPA's analytical method development and validation in support of this rulemaking. Two new analytical test methods are being promulgated in today's final rule (see Section VI.B.4).

The first method is EPA Method 1650 for determination of adsorbable organic halides (AOX). Development of Method 1650 began in 1989 to support data gathering for regulation of pulp and paper industry discharges. This method was developed by combining various procedures contained in methods from voluntary consensus standards bodies and other standards developing organizations such as German DIN standard 38 409, International Standard Organization (ISO) Method 9562, Scandinavian Method SCAN–W 9:89, Standard Method 5320 (published jointly by the American Public Health Association, the American Water Works Association and the Water Environment Federation), a method published by Environment Canada, EPA's Method 9020 and EPA's interim Method 450.1. The foreign and international methods all employed the batch adsorption technique for determination of AOX; the U.S. methods all employed the column technique. Nearly all data collected by the paper industry and others prior to development of Method 1650 were gathered using the column technique. Method 1650 allows use of both the batch and column techniques but contains restrictions on the batch technique specific to paper industry wastewaters, as detailed in the Method and as described above in Section VI.B.4 and in EPA's responses to public comments (DCN 14497, Vol. VII). In addition to the differences between adsorption techniques, none of the existing methods, including those in voluntary consensus standards, contained the standardized quality control (QC) and QC acceptance criteria that EPA requires for data verification and validation in its water programs. EPA is therefore promulgating the new EPA Method 1650.

EPA is also promulgating EPA Method 1653 for determination of chlorinated phenolics. Development of Method 1653 also began in 1989 to support data gathering for regulation of pulp and paper industry discharges. This method was developed using National Council of the Paper Industry for Air and Stream Improvement (NCASI) Methods CP85.01 and CP86.01 as a starting point and adding the necessary standardized QC and QC acceptance criteria. EPA Method 1653 and the NCASI methods employ in-situ derivatization to assure that only chlorophenolics are derivatized and measured. The in-situ derivatization technique allows only chlorophenolics to be derivatized in the effluent and leaves behind interfering analytes. This condition is necessary for accurate measurement of the relevant analytes. Voluntary consensus standards methods were not available for chlorophenolics by in-situ derivatization. EPA is therefore promulgating the new EPA Method 1653.

Dischargers are also required to monitor for 2,3,7,8-tetrachlorodibenzo-*p*-dioxin (dioxin; TCDD; 2,3,7,8-TCDD), 2,3,7,8-tetrachlorodibenzofuran (TCDF;

2,3,7,8-TCDF), chloroform, biochemical oxygen demand (BOD), and total suspended solids (TSS). Methods for monitoring these pollutants are specified in tables at 40 CFR part 136. When available, methods published by voluntary consensus standards bodies are included in the list of approved methods in these tables. Specifically, voluntary consensus standards are approved for the determination of chloroform, BOD, and TSS (from the 18th edition of Standard Methods). In addition, USGS methods are approved for BOD and TSS.

For TCDD and TCDF, EPA is specifying the use of EPA Method 1613, promulgated at 62 FR 48394 (September 15, 1997). This method was developed to support data gathering for regulation of pulp and paper industry discharges and incorporates procedures from EPA, academia, industry (NCASI and the Dow Chemical Co.) and a commercial laboratory. There were no voluntary consensus standards methods available for these pollutants by high resolution gas chromatography (HRGC) coupled with high resolution mass spectrometry (HRMS) at the time EPA Method 1613 was developed. Both HRGC and HRMS are required to separately detect and measure dioxin and furan isomers at low concentrations (i.e., low parts per quadrillion (ppq)). High resolution techniques are necessary to conduct the assay in the presence of interfering analytes. EPA is unaware of the existence of an HRGC/HRMS method from a voluntary consensus standards body for determination of TCDD and TCDF in the low ppq range in pulp and paper industry discharges.

XI. Background Documents

The summary of public comments and agency responses and the environmental impacts statement for the NESHAP are contained in the final Background Information Document (BID). A paper copy of the final Background Information Document for the NESHAP may be obtained from the U.S. EPA Library (MD–35), Research Triangle Park, North Carolina 27711, telephone (919) 541–2777; or from the National Technical Information Services, 5285 Port Royal Road, Springfield, Virginia 22151, telephone (703) 487–4650. To obtain the final Background Information Document, please refer to "Pulp, Paper, and Paperboard Industry—Background Information for Promulgated Air Emission Standards, Manufacturing Processes at Kraft, Sulfite, Soda, Semi-Chemical, Mechanical, and Secondary and Non-wood Fiber Mills, Final EIS" (EPA–453/R–93–050b). An electronic copy of the final Background Information Document is available from the Technology Transfer Network described in the **SUPPLEMENTARY INFORMATION** section of this document.

Documents supporting the effluent limitations guidelines and standards may be obtained by contacting the National Technical Information Services, 5285 Port Royal Road, Springfield, Virginia 22151, telephone (703) 487–4650.

EPA's technical conclusions concerning the wastewater regulations are detailed in the "Supplemental Technical Development Document for Effluent Limitations Guidelines and Standards for the Pulp, Paper, and Paperboard Point Source Category" (EPA–821–R–97–011, DCN 14487). The Agency's economic analysis is found in the "Economic Analysis for the National Emissions Standards for Hazardous Air Pollutants for Source Category: Pulp and Paper Production; Effluent Limitations Guidelines, Pretreatment Standards, and New Source Performance Standards for the Pulp, Paper, and Paperboard Industry—Phase I," referred to as the Economic Analysis (EPA–821–R–97–012, DCN 14649). This document also includes an analysis of the incremental costs and pollutant removals for the effluent regulations. Analytical methods used in the development of the effluent guidelines are found in "Analytical Methods for the Determination of Pollutants in Pulp and Paper Industry Wastewater," a compendium of analytical methods (EPA 821–B–97–00). The environmental assessment is presented in the "Water Quality Assessment of Final Effluent Limitations Guidelines for the Papergrade Sulfite and Bleached Papergrade Kraft and Soda Subcategories of the Pulp, Paper, and Paperboard Industry" (EPA–823–R–97–009, DCN 14650). The statistical analyses used in this rulemaking are detailed in the "Statistical Support Document for the Pulp and Paper Industry: Subpart B" (DCN 14496). The best management practices program is presented in "Technical Support Document for Best Management Practices for Spent Pulping Liquor Management, Spill Prevention, and Control (DCN 14489), also referred to as the BMP Technical Support Document. The Advanced Technology Incentives Program is presented in the "Technical Support Document for the Voluntary Advanced Technology Incentives Program," (EPA–821–R–97–014, DCN 14488).

List of Subjects

40 CFR Part 63

Environmental protection, Air pollution control, Hazardous substances, Reporting and recordkeeping requirements.

40 CFR Part 261

Hazardous waste, Recycling, Reporting and recordkeeping requirements.

40 CFR Part 430

Paper and paper products industry, Reporting and recordkeeping requirements, Waste treatment and disposal, Water pollution control.

Dated: November 14, 1997.

Carol M. Browner,

Administrator.

For the reasons set out in the preamble, title 40, chapter I of the Code of Federal Regulations is amended as follows:

PART 63—NATIONAL EMISSION STANDARDS FOR HAZARDOUS AIR POLLUTANTS FOR SOURCE CATEGORIES

1. The authority citation for part 63 continues to read as follows:

Authority: 42 U.S.C. 7401, *et seq.*

2. Part 63 is amended by adding subpart S to read as follows:

Subpart S—National Emission Standards for Hazardous Air Pollutants from the Pulp and Paper Industry

Sec.

63.440 Applicability.
63.441 Definitions.
63.442 [Reserved]
63.443 Standards for the pulping system at kraft, soda, and semi-chemical processes.
63.444 Standards for the pulping system at sulfite processes.
63.445 Standards for the bleaching system.
63.446 Standards for kraft pulping process condensates.
63.447 Clean condensate alternative.
63.448–63.449 [Reserved]
63.450 Standards for enclosures and closed-vent systems.
63.451–63.452 [Reserved]
63.453 Monitoring requirements.
63.454 Recordkeeping requirements.
63.455 Reporting requirements.
63.456 [Reserved]
63.457 Test methods and procedures.
63.458 Delegation of authority.
63.459 [Reserved]

Table 1 to Subpart S.—General Provisions Applicability to Subpart S

Subpart S—National Emission Standards for Hazardous Air Pollutants from the Pulp and Paper Industry

§ 63.440 Applicability.

(a) The provisions of this subpart apply to the owner or operator of processes that produce pulp, paper, or paperboard; that are located at a plant site that is a major source as defined in § 63.2 of subpart A of this part; and that use the following processes and materials:

(1) Kraft, soda, sulfite, or semi-chemical pulping processes using wood; or

(2) Mechanical pulping processes using wood; or

(3) Any process using secondary or non-wood fibers.

(b) The affected source to which the existing source provisions of this subpart apply is as follows:

(1) For the processes specified in paragraph (a)(1) of this section, the affected source is the total of all HAP emission points in the pulping and bleaching systems; or

(2) For the processes specified in paragraphs (a)(2) or (a)(3) of this section, the affected source is the total of all HAP emission points in the bleaching system.

(c) The new source provisions of this subpart apply to the total of all HAP emission points at new or existing sources as follows:

(1) Each affected source defined in paragraph (b)(1) of this section that commences construction or reconstruction after December 17, 1993;

(2) Each pulping system or bleaching system for the processes specified in paragraph (a)(1) of this section that commences construction or reconstruction after December 17, 1993;

(3) Each additional pulping or bleaching line at the processes specified in paragraph (a)(1) of this section, that commences construction after December 17, 1993;

(4) Each affected source defined in paragraph (b)(2) of this section that commences construction or reconstruction after March 8, 1996; or

(5) Each additional bleaching line at the processes specified in paragraphs (a)(2) or (a)(3) of this section, that commences construction after March 8, 1996.

(d) Each existing source shall achieve compliance no later than April 16, 2001, except as provided in paragraphs (d)(1) through (d)(3) of this section.

(1) Each kraft pulping system shall achieve compliance with the pulping system provisions of § 63.443 for the equipment listed in § 63.443(a)(1)(ii) through (a)(1)(v) as expeditiously as practicable, but in no event later than April 17, 2006 and the owners and operators shall establish dates, update dates, and report the dates for the milestones specified in § 63.455(b).

(2) Each dissolving-grade bleaching system at either kraft or sulfite pulping mills shall achieve compliance with the bleach plant provisions of § 63.445 of this subpart as expeditiously as practicable, but in no event later than 3 years after the promulgation of the revised effluent limitation guidelines and standards under 40 CFR 430.14 through 430.17 and 40 CFR 430.44 through 430.47.

(3) Each bleaching system complying with the Voluntary Advanced Technology Incentives Program for Effluent Limitation Guidelines in 40 CFR 430.24, shall comply with the requirements specified in either paragraph (d)(3)(i) or (d)(3)(ii) of this section for the effluent limitation guidelines and standards in 40 CFR 430.24.

(i) Comply with the bleach plant provisions of § 63.445 of this subpart as expeditiously as practicable, but in no event later than April 16, 2001.

(ii) Comply with all of the following:

(A) The owner or operator of a bleaching system shall comply with the bleach plant provisions of § 63.445 of this subpart as expeditiously as practicable, but in no event later than April 15, 2004.

(B) The owner or operator of a bleaching system shall not increase the application rate of chlorine or hypochlorite in kg of bleaching agent per megagram of ODP, in the bleaching system above the average daily rates used over the three months prior to June 15, 1998 until the requirements of paragraph (d)(3)(ii)(A) of this section are met and record application rates as specified in § 63.454(c).

(C) Owners and operators shall establish dates, update dates, and report the dates for the milestones specified in § 63.455(b).

(e) Each new source, specified as the total of all HAP emission points for the sources specified in paragraph (c) of this section, shall achieve compliance upon start-up or June 15, 1998, whichever is later, as provided in § 63.6(b) of subpart A of this part.

(f) Each owner or operator of an affected source with affected process equipment shared by more than one type of pulping process, shall comply with the applicable requirement in this subpart that achieves the maximum degree of reduction in HAP emissions.

(g) Each owner or operator of an affected source specified in paragraphs (a) through (c) of this section must comply with the requirements of subpart A—General Provisions of this part, as indicated in table 1 to this subpart.

§ 63.441 Definitions.

All terms used in this subpart shall have the meaning given them in the CAA, in subpart A of this part, and in this section as follows:

Acid condensate storage tank means any storage tank containing cooking acid following the sulfur dioxide gas fortification process.

Black liquor means spent cooking liquor that has been separated from the pulp produced by the kraft, soda, or semi-chemical pulping process.

Bleaching means brightening of pulp by the addition of oxidizing chemicals or reducing chemicals.

Bleaching line means a group of bleaching stages arranged in series such that bleaching of the pulp progresses as the pulp moves from one stage to the next.

Bleaching stage means all process equipment associated with a discrete step of chemical application and removal in the bleaching process including chemical and steam mixers, bleaching towers, washers, seal (filtrate) tanks, vacuum pumps, and any other equipment serving the same function as those previously listed.

Bleaching system means all process equipment after high-density pulp storage prior to the first application of oxidizing chemicals or reducing chemicals following the pulping system, up to and including the final bleaching stage.

Boiler means any enclosed combustion device that extracts useful energy in the form of steam. A boiler is not considered a thermal oxidizer.

Chip steamer means a vessel used for the purpose of preheating or pretreating wood chips prior to the digester, using flash steam from the digester or live steam.

Closed-vent system means a system that is not open to the atmosphere and is composed of piping, ductwork, connections, and, if necessary, flow-inducing devices that transport gas or vapor from an emission point to a control device.

Combustion device means an individual unit of equipment, including but not limited to, a thermal oxidizer, lime kiln, recovery furnace, process heater, or boiler, used for the thermal oxidation of organic hazardous air pollutant vapors.

Decker system means all equipment used to thicken the pulp slurry or reduce its liquid content after the pulp washing system and prior to high-density pulp storage. The decker system includes decker vents, filtrate tanks, associated vacuum pumps, and any other equipment serving the same function as those previously listed.

Digester system means each continuous digester or each batch digester used for the chemical treatment of wood or non-wood fibers. The digester system equipment includes associated flash tank(s), blow tank(s), chip steamer(s) not using fresh steam, blow heat recovery accumulator(s), relief gas condenser(s), prehydrolysis unit(s) preceding the pulp washing system, and any other equipment serving the same function as those previously listed. The digester system includes any of the liquid streams or condensates associated with batch or continuous digester relief, blow, or flash steam processes.

Emission point means any part of a stationary source that emits hazardous air pollutants regulated under this subpart, including emissions from individual process vents, stacks, open pieces of process equipment, equipment leaks, wastewater and condensate collection and treatment system units, and those emissions that could reasonably be conveyed through a stack, chimney, or duct where such emissions first reach the environment.

Evaporator system means all equipment associated with increasing the solids content and/or concentrating spent cooking liquor from the pulp washing system including pre-evaporators, multi-effect evaporators, concentrators, and vacuum systems, as well as associated condensers, hotwells, and condensate streams, and any other equipment serving the same function as those previously listed.

Flow indicator means any device that indicates gas or liquid flow in an enclosed system.

HAP means a hazardous air pollutant as defined in § 63.2 of subpart A of this part.

High volume, low concentration or HVLC collection system means the gas collection and transport system used to convey gases from the HVLC system to a control device.

High volume, low concentration or HVLC system means the collection of equipment including the pulp washing, knotter, screen, decker, and oxygen delignification systems, weak liquor storage tanks, and any other equipment serving the same function as those previously listed.

Knotter system means equipment where knots, oversized material, or pieces of uncooked wood are removed from the pulp slurry after the digester system and prior to the pulp washing system. The knotter system equipment includes the knotter, knot drainer tanks, ancillary tanks, and any other equipment serving the same function as those previously listed.

Kraft pulping means a chemical pulping process that uses a mixture of sodium hydroxide and sodium sulfide as the cooking liquor.

Lime kiln means an enclosed combustion device used to calcine lime mud, which consists primarily of calcium carbonate, into calcium oxide.

Low volume, high concentration or LVHC collection system means the gas collection and transport system used to convey gases from the LVHC system to a control device.

Low volume, high concentration or LVHC system means the collection of equipment including the digester, turpentine recovery, evaporator, steam stripper systems, and any other equipment serving the same function as those previously listed.

Mechanical pulping means a pulping process that only uses mechanical and thermo-mechanical processes to reduce wood to a fibrous mass. The mechanical pulping processes include, but are not limited to, stone groundwood, pressurized groundwood, refiner mechanical, thermal refiner mechanical, thermo-mechanical, and tandem thermo-mechanical.

Non-wood pulping means the production of pulp from fiber sources other than trees. The non-wood fiber sources include, but are not limited to, bagasse, cereal straw, cotton, flax straw, hemp, jute, kenaf, and leaf fibers.

Oven-dried pulp or ODP means a pulp sample at zero percent moisture content by weight. Pulp samples for applicability or compliance determinations for both the pulping and bleaching systems shall be unbleached pulp. For purposes of complying with mass emission limits in this subpart, megagram of ODP shall be measured to represent the amount of pulp entering and processed by the equipment system under the specified mass limit. For equipment that does not process pulp, megagram of ODP shall be measured to represent the amount of pulp that was processed to produce the gas and liquid streams.

Oxygen delignification system means the equipment that uses oxygen to remove lignin from pulp after high-density stock storage and prior to the bleaching system. The oxygen delignification system equipment includes the blow tank, washers, filtrate tanks, any interstage pulp storage tanks, and any other equipment serving the same function as those previously listed.

Primary fuel means the fuel that provides the principal heat input to the combustion device. To be considered primary, the fuel must be able to sustain operation of the combustion device without the addition of other fuels.

Process wastewater treatment system means a collection of equipment, a process, or specific technique that removes or destroys the HAP's in a process wastewater stream. Examples include, but are not limited to, a steam stripping unit, wastewater thermal oxidizer, or biological treatment unit.

Pulp washing system means all equipment used to wash pulp and separate spent cooking chemicals following the digester system and prior to the bleaching system, oxygen delignification system, or paper machine system (at unbleached mills). The pulp washing system equipment includes vacuum drum washers, diffusion washers, rotary pressure washers, horizontal belt filters, intermediate stock chests, and their associated vacuum pumps, filtrate tanks, foam breakers or tanks, and any other equipment serving the same function as those previously listed. The pulp washing system does not include deckers, screens, knotters, stock chests, or pulp storage tanks following the last stage of pulp washing.

Pulping line means a group of equipment arranged in series such that the wood chips are digested and the resulting pulp progresses through a sequence of steps that may include knotting, refining, washing, thickening, blending, storing, oxygen delignification, and any other equipment serving the same function as those previously listed.

Pulping process condensates means any HAP-containing liquid that results from contact of water with organic compounds in the pulping process. Examples of process condensates include digester system condensates, turpentine recovery system condensates, evaporator system condensates, LVHC system condensates, HVLC system condensates, and any other condensates from equipment serving the same function as those previously listed. Liquid streams that are intended for byproduct recovery are not considered process condensate streams.

Pulping system means all process equipment, beginning with the digester system, and up to and including the last piece of pulp conditioning equipment prior to the bleaching system, including

treatment with ozone, oxygen, or peroxide before the first application of a chemical bleaching agent intended to brighten pulp. The pulping system includes pulping process condensates and can include multiple pulping lines.

Recovery furnace means an enclosed combustion device where concentrated spent liquor is burned to recover sodium and sulfur, produce steam, and dispose of unwanted dissolved wood components in the liquor.

Screen system means equipment in which oversized particles are removed from the pulp slurry prior to the bleaching or papermaking system washed stock storage.

Secondary fiber pulping means a pulping process that converts a fibrous material, that has previously undergone a manufacturing process, into pulp stock through the addition of water and mechanical energy. The mill then uses that pulp as the raw material in another manufactured product. These mills may also utilize chemical, heat, and mechanical processes to remove ink particles from the fiber stock.

Semi-chemical pulping means a pulping process that combines both chemical and mechanical pulping processes. The semi-chemical pulping process produces intermediate yields ranging from 55 to 90 percent.

Soda pulping means a chemical pulping process that uses sodium hydroxide as the active chemical in the cooking liquor.

Spent liquor means process liquid generated from the separation of cooking liquor from pulp by the pulp washing system containing dissolved organic wood materials and residual cooking compounds.

Steam stripper system means a column (including associated stripper feed tanks, condensers, or heat exchangers) used to remove compounds from wastewater or condensates using steam. The steam stripper system also contains all equipment associated with a methanol rectification process including rectifiers, condensers, decanters, storage tanks, and any other equipment serving the same function as those previously listed.

Strong liquor storage tanks means all storage tanks containing liquor that has been concentrated in preparation for combustion or oxidation in the recovery process.

Sulfite pulping means a chemical pulping process that uses a mixture of sulfurous acid and bisulfite ion as the cooking liquor.

Temperature monitoring device means a piece of equipment used to monitor temperature and having an accuracy of ±1.0 percent of the temperature being monitored expressed in degrees Celsius or ±0.5 degrees Celsius (°C), whichever is greater.

Thermal oxidizer means an enclosed device that destroys organic compounds by thermal oxidation.

Turpentine recovery system means all equipment associated with recovering turpentine from digester system gases including condensers, decanters, storage tanks, and any other equipment serving the same function as those previously listed. The turpentine recovery system includes any liquid streams associated with the turpentine recovery process such as turpentine decanter underflow. Liquid streams that are intended for byproduct recovery are not considered turpentine recovery system condensate streams.

Weak liquor storage tank means any storage tank except washer filtrate tanks containing spent liquor recovered from the pulping process and prior to the evaporator system.

§ 63.442 [Reserved]

§ 63.443 Standards for the pulping system at kraft, soda, and semi-chemical processes.

(a) The owner or operator of each pulping system using the kraft process subject to the requirements of this subpart shall control the total HAP emissions from the following equipment systems, as specified in paragraphs (c) and (d) of this section.

(1) At existing affected sources, the total HAP emissions from the following equipment systems shall be controlled:

(i) Each LVHC system;

(ii) Each knotter or screen system with total HAP mass emission rates greater than or equal to the rates specified in paragraphs (a)(1)(ii)(A) or (a)(1)(ii)(B) of this section or the combined rate specified in paragraph (a)(1)(ii)(C) of this section.

(A) Each knotter system with emissions of 0.05 kilograms or more of total HAP per megagram of ODP (0.1 pounds per ton).

(B) Each screen system with emissions of 0.10 kilograms or more of total HAP per megagram of ODP (0.2 pounds per ton).

(C) Each knotter and screen system with emissions of 0.15 kilograms or more of total HAP per megagram of ODP (0.3 pounds per ton).

(iii) Each pulp washing system;

(iv) Each decker system that:

(A) Uses any process water other than fresh water or paper machine white water; or

(B) Uses any process water with a total HAP concentration greater than 400 parts per million by weight; and

(v) Each oxygen delignification system.

(2) At new affected sources, the total HAP emissions from the equipment systems listed in paragraphs (a)(1)(i), (a)(1)(iii), and (a)(1)(v) of this section and the following equipment systems shall be controlled:

(i) Each knotter system;

(ii) Each screen system;

(iii) Each decker system; and

(iv) Each weak liquor storage tank.

(b) The owner or operator of each pulping system using a semi-chemical or soda process subject to the requirements of this subpart shall control the total HAP emissions from the following equipment systems as specified in paragraphs (c) and (d) of this section.

(1) At each existing affected sources, the total HAP emissions from each LVHC system shall be controlled.

(2) At each new affected source, the total HAP emissions from each LVHC system and each pulp washing system shall be controlled.

(c) Equipment systems listed in paragraphs (a) and (b) of this section shall be enclosed and vented into a closed-vent system and routed to a control device that meets the requirements specified in paragraph (d) of this section. The enclosures and closed-vent system shall meet the requirements specified in § 63.450.

(d) The control device used to reduce total HAP emissions from each equipment system listed in paragraphs (a) and (b) of this section shall:

(1) Reduce total HAP emissions by 98 percent or more by weight; or

(2) Reduce the total HAP concentration at the outlet of the thermal oxidizer to 20 parts per million or less by volume, corrected to 10 percent oxygen on a dry basis; or

(3) Reduce total HAP emissions using a thermal oxidizer designed and operated at a minimum temperature of 871 °C (1600 °F) and a minimum residence time of 0.75 seconds; or

(4) Reduce total HAP emissions using a boiler, lime kiln, or recovery furnace by introducing the HAP emission stream with the primary fuel or into the flame zone.

(e) Periods of excess emissions reported under § 63.455 shall not be a violation of § 63.443 (c) and (d) provided that the time of excess emissions (excluding periods of startup, shutdown, or malfunction) divided by the total process operating time in a semi-annual reporting period does not exceed the following levels:

(1) One percent for control devices used to reduce the total HAP emissions from the LVHC system; and

(2) Four percent for control devices used to reduce the total HAP emissions from the HVLC system; and

(3) Four percent for control devices used to reduce the total HAP emissions from both the LVHC and HVLC systems.

§ 63.444 Standards for the pulping system at sulfite processes.

(a) The owner or operator of each sulfite process subject to the requirements of this subpart shall control the total HAP emissions from the following equipment systems as specified in paragraphs (b) and (c) of this section.

(1) At existing sulfite affected sources, the total HAP emissions from the following equipment systems shall be controlled:

(i) Each digester system vent;

(ii) Each evaporator system vent; and

(iii) Each pulp washing system.

(2) At new affected sources, the total HAP emissions from the equipment systems listed in paragraph (a)(1) of this section and the following equipment shall be controlled:

(i) Each weak liquor storage tank;

(ii) Each strong liquor storage tank; and

(iii) Each acid condensate storage tank.

(b) Equipment listed in paragraph (a) of this section shall be enclosed and vented into a closed-vent system and routed to a control device that meets the requirements specified in paragraph (c) of this section. The enclosures and closed-vent system shall meet the requirements specified in § 63.450. Emissions from equipment listed in paragraph (a) of this section that is not necessary to be reduced to meet paragraph (c) of this section is not required to be routed to a control device.

(c) The total HAP emissions from both the equipment systems listed in paragraph (a) of this section and the vents, wastewater, and condensate streams from the control device used to reduce HAP emissions, shall be controlled as follows.

(1) Each calcium-based or sodium-based sulfite pulping process shall:

(i) Emit no more than 0.44 kilograms of total HAP or methanol per megagram (0.89 pounds per ton) of ODP; or

(ii) Remove 92 percent or more by weight of the total HAP or methanol.

(2) Each magnesium-based or ammonium-based sulfite pulping process shall:

(i) Emit no more than 1.1 kilograms of total HAP or methanol per megagram (2.2 pounds per ton) of ODP; or

(ii) Remove 87 percent or more by weight of the total HAP or methanol.

§ 63.445 Standards for the bleaching system.

(a) Each bleaching system that does not use any chlorine or chlorinated compounds for bleaching is exempt from the requirements of this section. Owners or operators of the following bleaching systems shall meet all the provisions of this section:

(1) Bleaching systems that use chlorine;

(2) Bleaching systems bleaching pulp from kraft, sulfite, or soda pulping processes that uses any chlorinated compounds; or

(3) Bleaching systems bleaching pulp from mechanical pulping processes using wood or from any process using secondary or non-wood fibers, that use chlorine dioxide.

(b) The equipment at each bleaching stage, of the bleaching systems listed in paragraph (a) of this section, where chlorinated compounds are introduced shall be enclosed and vented into a closed-vent system and routed to a control device that meets the requirements specified in paragraph (c) of this section. The enclosures and closed-vent system shall meet the requirements specified in § 63.450.

(c) The control device used to reduce chlorinated HAP emissions (not including chloroform) from the equipment specified in paragraph (b) of this section shall:

(1) Reduce the total chlorinated HAP mass in the vent stream entering the control device by 99 percent or more by weight;

(2) Achieve a treatment device outlet concentration of 10 parts per million or less by volume of total chlorinated HAP; or

(3) Achieve a treatment device outlet mass emission rate of 0.001 kg of total chlorinated HAP mass per megagram (0.002 pounds per ton) of ODP.

(d) The owner or operator of each bleaching system subject to paragraph (a)(2) of this section shall comply with paragraph (d)(1) or (d)(2) of this section to reduce chloroform air emissions to the atmosphere, except the owner or operator of each bleaching system complying with extended compliance under § 63.440(d)(3)(ii) shall comply with paragraph (d)(1) of this section.

(1) Comply with the following applicable effluent limitation guidelines and standards specified in 40 CFR part 430:

(i) Dissolving-grade kraft bleaching systems and lines, 40 CFR 430.14 through 430.17;

(ii) Paper-grade kraft and soda bleaching systems and lines, 40 CFR 430.24(a)(1) and (e), and 40 CFR 430.26 (a) and (c);

(iii) Dissolving-grade sulfite bleaching systems and lines, 40 CFR 430.44 through 430.47; or

(iv) Paper-grade sulfite bleaching systems and lines, 40 CFR 430.54(a) and (c), and 430.56(a) and (c).

(2) Use no hypochlorite or chlorine for bleaching in the bleaching system or line.

§ 63.446 Standards for kraft pulping process condensates.

(a) The requirements of this section apply to owners or operators of kraft processes subject to the requirements of this subpart.

(b) The pulping process condensates from the following equipment systems shall be treated to meet the requirements specified in paragraphs (c), (d), and (e) of this section:

(1) Each digester system;

(2) Each turpentine recovery system;

(3) Each evaporator stage where weak liquor is introduced (feed stages) in the evaporator system;

(4) Each HVLC collection system; and

(5) Each LVHC collection system.

(c) One of the following combinations of HAP-containing pulping process condensates generated, produced, or associated with the equipment systems listed in paragraph (b) of this section shall be subject to the requirements of paragraphs (d) and (e) of this section:

(1) All pulping process condensates from the equipment systems specified in paragraphs (b)(1) through (b)(5) of this section.

(2) The combined pulping process condensates from the equipment systems specified in paragraphs (b)(4) and (b)(5) of this section, plus pulping process condensate stream(s) that in total contain at least 65 percent of the total HAP mass from the pulping process condensates from equipment systems listed in paragraphs (b)(1) through (b)(3) of this section.

(3) The pulping process condensates from equipment systems listed in paragraphs (b)(1) through (b)(5) of this section that in total contain a total HAP mass of 3.6 kilograms or more of total HAP per megagram (7.2 pounds per ton) of ODP for mills that do not perform bleaching or 5.5 kilograms or more of total HAP per megagram (11.1 pounds per ton) of ODP for mills that perform bleaching.

(d) The pulping process condensates from the equipment systems listed in paragraph (b) of this section shall be conveyed in a closed collection system that is designed and operated to meet the requirements specified in paragraphs (d)(1) and (d)(2) of this section.

(1) Each closed collection system shall meet the individual drain system

requirements specified in § 63.960, 63.961, and 63.962 of subpart RR of this part, except for closed vent systems and control devices shall be designed and operated in accordance with §§ 63.443(d) and 63.450, instead of in accordance with § 63.693 as specified in § 63.962 (a)(3)(ii), (b)(3)(ii)(A), and (b)(3)(ii)(B)(*5*)(*iii*); and

(2) If a condensate tank is used in the closed collection system, the tank shall meet the following requirements:

(i) The fixed roof and all openings (e.g., access hatches, sampling ports, gauge wells) shall be designed and operated with no detectable leaks as indicated by an instrument reading of less than 500 parts per million above background, and vented into a closed-vent system that meets the requirements in § 63.450 and routed to a control device that meets the requirements in § 63.443(d); and

(ii) Each opening shall be maintained in a closed, sealed position (e.g., covered by a lid that is gasketed and latched) at all times that the tank contains pulping process condensates or any HAP removed from a pulping process condensate stream except when it is necessary to use the opening for sampling, removal, or for equipment inspection, maintenance, or repair.

(e) Each pulping process condensate from the equipment systems listed in paragraph (b) of this section shall be treated according to one of the following options:

(1) Recycle the pulping process condensate to an equipment system specified in § 63.443(a) meeting the requirements specified in § 63.443(c) and (d); or

(2) Discharge the pulping process condensate below the liquid surface of a biological treatment system meeting the requirement specified in paragraph (e)(3) of this section; or

(3) Treat the pulping process condensates to reduce or destroy the total HAP's by at least 92 percent or more by weight; or

(4) At mills that do not perform bleaching, treat the pulping process condensates to remove 3.3 kilograms or more of total HAP per megagram (6.6 pounds per ton) of ODP, or achieve a total HAP concentration of 210 parts per million or less by weight at the outlet of the control device; or

(5) At mills that perform bleaching, treat the pulping process condensates to remove 5.1 kilograms or more of total HAP per megagram (10.2 pounds per ton) of ODP, or achieve a total HAP concentration of 330 parts per million or less by weight at the outlet of the control device.

(f) Each HAP removed from a pulping process condensate stream during treatment and handling under paragraphs (d) or (e) of this section, except for those treated according to paragraph (e)(2) of this section, shall be controlled as specified in § 63.443(c) and (d).

(g) For each steam stripper system used to comply with the requirements specified in paragraph (e)(3) of this section, periods of excess emissions reported under § 63.455 shall not be a violation of paragraphs (d), (e), and (f) of this section provided that the time of excess emissions (including periods of startup, shutdown, or malfunction) divided by the total process operating time in a semi-annual reporting period does not exceed 10 percent.

(h) Each owner or operator of a new or existing affected source subject to the requirements of this section shall evaluate all new or modified pulping process condensates or changes in the annual bleached or non-bleached ODP used to comply with paragraph (i) of this section, to determine if they meet the applicable requirements of this section.

(i) For the purposes of meeting the requirements in paragraphs (c)(2), (e)(4), or (e)(5) of this section at mills producing both bleached and unbleached pulp products, owners and operators may meet a prorated mass standard that is calculated by prorating the applicable mass standards (kilograms of total HAP per megagram of ODP) for bleached and unbleached specified in paragraphs (c)(2), (e)(4), or (e)(5) of this section by the ratio of annual megagrams of bleached and unbleached ODP.

§ 63.447 Clean condensate alternative.

As an alternative to the requirements specified in § 63.443(a)(1)(ii) through (a)(1)(v) for the control of HAP emissions from pulping systems using the kraft process, an owner or operator must demonstrate to the satisfaction of the Administrator, by meeting all the requirements below, that the total HAP emissions reductions achieved by this clean condensate alternative technology are equal to or greater than the total HAP emission reductions that would have been achieved by compliance with § 63.443(a)(1)(ii) through (a)(1)(v).

(a) For the purposes of this section only the following additional definitions apply.

(1) *Clean condensate alternative affected source* means the total of all HAP emission points in the pulping, bleaching, causticizing, and papermaking systems (exclusive of HAP emissions attributable to additives to paper machines and HAP emission points in the LVHC system).

(2) *Causticizing system* means all equipment associated with converting sodium carbonate into active sodium hydroxide. The equipment includes smelt dissolving tanks, lime mud washers and storage tanks, white and mud liquor clarifiers and storage tanks, slakers, slaker grit washers, lime kilns, green liquor clarifiers and storage tanks, and dreg washers ending with the white liquor storage tanks prior to the digester system, and any other equipment serving the same function as those previously listed.

(3) *Papermaking system* means all equipment used to convert pulp into paper, paperboard, or market pulp, including the stock storage and preparation systems, the paper or paperboard machines, and the paper machine white water system, broke recovery systems, and the systems involved in calendering, drying, on-machine coating, slitting, winding, and cutting.

(b) Each owner or operator shall install and operate a clean condensate alternative technology with a continuous monitoring system to reduce total HAP emissions by treating and reducing HAP concentrations in the pulping process water used within the clean condensate alternative affected source.

(c) Each owner or operator shall calculate HAP emissions on a kilogram per megagram of ODP basis and measure HAP emissions according to the appropriate procedures contained in § 63.457.

(d) Each owner or operator shall determine the baseline HAP emissions for each equipment system and the total of all equipment systems in the clean condensate alternative affected source based on the following:

(1) Process and air pollution control equipment installed and operating on or after December 17, 1993, and

(2) Compliance with the following requirements that affect the level of HAP emissions from the clean condensate alternative affected source:

(i) The pulping process condensates requirements in § 63.446;

(ii) The applicable effluent limitation guidelines and standards in 40 CFR part 430, subparts A, B, D, and E; and

(iii) All other applicable requirements of local, State, or Federal agencies or statutes.

(e) Each owner or operator shall determine the following HAP emission reductions from the baseline HAP emissions determined in paragraph (d) of this section for each equipment system and the total of all equipment

systems in the clean condensate alternative affected source:

(1) The HAP emission reduction occurring by complying with the requirements of § 63.443(a)(1)(ii) through (a)(1)(v); and

(2) The HAP emissions reduction that occurring by complying with the clean condensate alternative technology.

(f) For the purposes of all requirements in this section, each owner or operator may use as an alternative, individual equipment systems (instead of total of all equipment systems) within the clean condensate alternative affected source to determine emissions and reductions to demonstrate equal or greater than the reductions that would have been achieved by compliance with § 63.443(a)(1)(ii) through (a)(1)(v).

(g) The initial and updates to the control strategy report specified in § 63.455(b) shall include to the extent possible the following information:

(1) A detailed description of:

(i) The equipment systems and emission points that comprise the clean condensate alternative affected source;

(ii) The air pollution control technologies that would be used to meet the requirements of § 63.443(a)(1)(ii) through (a)(1)(v);

(iii) The clean condensate alternative technology to be used.

(2) Estimates and basis for the estimates of total HAP emissions and emissions reductions to fulfill the requirements paragraphs (d), (e), and (f) of this section.

(h) Each owner or operator shall report to the Administrator by the applicable compliance date specified in § 63.440(d) or (e) the rationale, calculations, test procedures, and data documentation used to demonstrate compliance with all the requirements of this section.

§§ 63.448–63.449 [Reserved]

§ 63.450 Standards for enclosures and closed-vent systems.

(a) Each enclosure and closed-vent system specified in §§ 63.443(c), 63.444(b), and 63.445(b) for capturing and transporting vent streams that contain HAP shall meet the requirements specified in paragraphs (b) through (d) of this section.

(b) Each enclosure shall maintain negative pressure at each enclosure or hood opening as demonstrated by the procedures specified § 63.457(e). Each enclosure or hood opening closed during the initial performance test specified in § 63.457(a) shall be maintained in the same closed and sealed position as during the performance test at all times except when necessary to use the opening for sampling, inspection, maintenance, or repairs.

(c) Each component of the closed-vent system used to comply with §§ 63.443(c), 63.444(b), and 63.445(b) that is operated at positive pressure and located prior to a control device shall be designed for and operated with no detectable leaks as indicated by an instrument reading of less than 500 parts per million by volume above background, as measured by the procedures specified in § 63.457(d).

(d) Each bypass line in the closed-vent system that could divert vent streams containing HAP to the atmosphere without meeting the emission limitations in §§ 63.443, 63.444, or 63.445 shall comply with either of the following requirements:

(1) On each bypass line, the owner or operator shall install, calibrate, maintain, and operate according to manufacturer's specifications a flow indicator that provides a record of the presence of gas stream flow in the bypass line at least once every 15 minutes. The flow indicator shall be installed in the bypass line in such a way as to indicate flow in the bypass line; or

(2) For bypass line valves that are not computer controlled, the owner or operator shall maintain the bypass line valve in the closed position with a car seal or a seal placed on the valve or closure mechanism in such a way that valve or closure mechanism cannot be opened without breaking the seal.

§§ 63.451–63.452 [Reserved]

§ 63.453 Monitoring requirements.

(a) Each owner or operator subject to the standards specified in §§ 63.443(c) and (d), 63.444(b) and (c), 63.445(b) and (c), 63.446(c), (d), and (e), 63.447(b) or § 63.450(d), shall install, calibrate, certify, operate, and maintain according to the manufacturer's specifications, a continuous monitoring system (CMS, as defined in § 63.2 of this part) as specified in paragraphs (b) through (m) of this section, except as allowed in paragraph (m) of this section. The CMS shall include a continuous recorder.

(b) A CMS shall be operated to measure the temperature in the firebox or in the ductwork immediately downstream of the firebox and before any substantial heat exchange occurs for each thermal oxidizer used to comply with the requirements of § 63.443(d)(1) through (d)(3). Owners and operators complying with the requirements in § 63.443(d)(2) or (d)(3) shall monitor the parameter specified and for the temperature and concentration limits specified.

(c) A CMS shall be operated to measure the following parameters for each gas scrubber used to comply with the bleaching system requirements of § 63.445(c) or the sulfite pulping system requirements of § 63.444(c).

(1) The pH or the oxidation/reduction potential of the gas scrubber effluent;

(2) The gas scrubber vent gas inlet flow rate; and

(3) The gas scrubber liquid influent flow rate.

(d) As an option to the requirements specified in paragraph (c) of this section, a CMS shall be operated to measure the chlorine outlet concentration of each gas scrubber used to comply with the bleaching system outlet concentration requirement specified in § 63.445(c)(2).

(e) The owner or operator of a bleaching system complying with 40 CFR 430.24, shall monitor the chlorine and hypochlorite application rates, in kg of bleaching agent per megagram of ODP, of the bleaching system during the extended compliance period specified in § 63.440(d)(3).

(f) A CMS shall be operated to measure the gas scrubber parameters specified in paragraphs (c)(1) through (c)(3) of this section or those site specific parameters determined according to the procedures specified in paragraph (n) of this section to comply with the sulfite pulping system requirements specified in § 63.444(c).

(g) A CMS shall be operated to measure the following parameters for each steam stripper used to comply with the treatment requirements in § 63.446(e) (3), (4), or (5):

(1) The process wastewater feed rate;

(2) The steam feed rate; and

(3) The process wastewater column feed temperature.

(h) As an option to the requirements specified in paragraph (g) of this section, a CMS shall be operated to measure the methanol outlet concentration to comply with the steam stripper outlet concentration requirement specified in § 63.446 (e)(4) or (e)(5).

(i) A CMS shall be operated to measure the appropriate parameters determined according to the procedures specified in paragraph (n) of this section to comply with the condensate applicability requirements specified in § 63.446(c).

(j) Each owner or operator using a biological treatment system to comply with § 63.446(e)(2) shall perform the following monitoring procedures.

(1) On a daily basis, monitor the following parameters for each biological treatment unit:

(i) Composite daily sample of outlet soluble BOD_5 concentration to monitor for maximum daily and maximum monthly average;

(ii) Mixed liquor volatile suspended solids;

(iii) Horsepower of aerator unit(s);

(iv) Inlet liquid flow; and

(v) Liquid temperature.

(2) Obtain daily inlet and outlet liquid grab samples from each biological treatment unit to have HAP data available to perform quarterly percent reduction tests specified in paragraph (j)(2)(ii) of this section and the compliance percent reduction tests specified in paragraph (p)(1)(i) of this section. Perform the following procedures with the liquid samples:

(i) Store the samples for 5 days as specified in § 63.457(n). The 5 day storage requirement is required since the soluble BOD_5 test requires 5 days to obtain results. If the results of the soluble BOD_5 test are outside of the range established during the initial performance test, then the archive sample shall be used to perform the percent reduction test specified in § 63.457(1).

(ii) Perform the percent reduction test procedures specified in § 63.457(l) within 45 days after the beginning of each quarter as follows.

(A) The percent reduction test performed in the first quarter (annually) shall be performed for total HAP and the percent reduction obtained from the test shall be at least as great as the total HAP reduction specified in § 63.446(e)(2).

(B) The remaining quarterly percent reduction tests shall be performed for methanol and the percent reduction obtained from the test shall be at least as great as the methanol reduction determined in the previous first-quarter test specified in paragraph (j)(2)(ii)(A) of this section.

(C) The parameter values used to calculate the percent reductions required in paragraphs (j)(2)(ii)(A) and (j)(2)(ii)(B) of this section shall be parameter values measured and samples taken in paragraph (j)(1) of this section.

(k) Each enclosure and closed-vent system used to comply with § 63.450(a) shall comply with the requirements specified in paragraphs (k)(1) through (k)(6) of this section.

(1) For each enclosure opening, a visual inspection of the closure mechanism specified in § 63.450(b) shall be performed at least once every 30 days to ensure the opening is maintained in the closed position and sealed.

(2) Each closed-vent system required by § 63.450(a) shall be visually inspected every 30 days and at other times as requested by the Administrator. The visual inspection shall include inspection of ductwork, piping, enclosures, and connections to covers for visible evidence of defects.

(3) For positive pressure closed-vent systems or portions of closed-vent systems, demonstrate no detectable leaks as specified in § 63.450(c) measured initially and annually by the procedures in § 63.457(d).

(4) Demonstrate initially and annually that each enclosure opening is maintained at negative pressure as specified in § 63.457(e).

(5) The valve or closure mechanism specified in § 63.450(d)(2) shall be inspected at least once every 30 days to ensure that the valve is maintained in the closed position and the emission point gas stream is not diverted through the bypass line.

(6) If an inspection required by paragraphs (k)(1) through (k)(5) of this section identifies visible defects in ductwork, piping, enclosures or connections to covers required by § 63.450, or if an instrument reading of 500 parts per million by volume or greater above background is measured, or if enclosure openings are not maintained at negative pressure, then the following corrective actions shall be taken as soon as practicable.

(i) A first effort to repair or correct the closed-vent system shall be made as soon as practicable but no later than 5 calendar days after the problem is identified.

(ii) The repair or corrective action shall be completed no later than 15 calendar days after the problem is identified.

(l) Each pulping process condensate closed collection system used to comply with § 63.446(d) shall be visually inspected every 30 days and shall comply with the inspection and monitoring requirements specified in § 63.964 of subpart RR of this part, except for the closed-vent system and control device inspection and monitoring requirements specified in § 63.964(a)(2) of subpart RR of this part, the closed-vent system and the control device shall meet the requirements specified in paragraphs (a) and (k) of this section.

(m) Each owner or operator using a control device, technique or an alternative parameter other than those specified in paragraphs (b) through (l) of this section shall install a CMS and establish appropriate operating parameters to be monitored that demonstrate, to the Administrator's satisfaction, continuous compliance with the applicable control requirements.

(n) To establish or reestablish, the value for each operating parameter required to be monitored under paragraphs (b) through (j), (l), and (m) of this section or to establish appropriate parameters for paragraphs (f), (i), and (m) of this section, each owner or operator shall use the following procedures:

(1) During the initial performance test required in § 63.457(a) or any subsequent performance test, continuously record the operating parameter;

(2) Determinations shall be based on the control performance and parameter data monitored during the performance test, supplemented if necessary by engineering assessments and the manufacturer's recommendations;

(3) The owner or operator shall provide for the Administrator's approval the rationale for selecting the monitoring parameters necessary to comply with paragraphs (f), (i), and (m) of this section; and

(4) Provide for the Administrator's approval the rationale for the selected operating parameter value, and monitoring frequency, and averaging time. Include all data and calculations used to develop the value and a description of why the value, monitoring frequency, and averaging time demonstrate continuous compliance with the applicable emission standard.

(o) Each owner or operator of a control device subject to the monitoring provisions of this section shall operate the control device in a manner consistent with the minimum or maximum (as appropriate) operating parameter value or procedure required to be monitored under paragraphs (a) through (n) of this section and established under this subpart. Except as provided in paragraph (p) of this section, § 63.443(e), or § 63.446(g), operation of the control device below minimum operating parameter values or above maximum operating parameter values established under this subpart or failure to perform procedures required by this subpart shall constitute a violation of the applicable emission standard of this subpart and be reported as a period of excess emissions.

(p) Each owner or operator of a biological treatment system complying with paragraph (j) of this section shall perform all the following requirements when the monitoring parameters specified in paragraphs (j)(1)(i) through (j)(1)(iii) of this section are below minimum operating parameter values or

above maximum operating parameter values established in paragraph (n) of this section.

(1) The following shall occur and be recorded as soon as practical:

(i) Determine compliance with § 63.446(e)(2) using the percent reduction test procedures specified in § 63.457(l) and the monitoring data specified in paragraph (j)(1) of this section that coincide with the time period of the parameter excursion;

(ii) Steps shall be taken to repair or adjust the operation of the process to end the parameter excursion period; and

(iii) Steps shall be taken to minimize total HAP emissions to the atmosphere during the parameter excursion period.

(2) A parameter excursion is not a violation of the applicable emission standard if the percent reduction test specified in paragraph (p)(1)(i) of this section demonstrates compliance with § 63.446(e)(2), and no maintenance or changes have been made to the process or control device after the beginning of a parameter excursion that would influence the results of the determination.

§ 63.454 Recordkeeping requirements.

(a) The owner or operator of each affected source subject to the requirements of this subpart shall comply with the recordkeeping requirements of § 63.10 of subpart A of this part, as shown in table 1, and the requirements specified in paragraphs (b) through (d) of this section for the monitoring parameters specified in § 63.453.

(b) For each applicable enclosure opening, closed-vent system, and closed collection system, the owner or operator shall prepare and maintain a site-specific inspection plan including a drawing or schematic of the components of applicable affected equipment and shall record the following information for each inspection:

(1) Date of inspection;

(2) The equipment type and identification;

(3) Results of negative pressure tests for enclosures;

(4) Results of leak detection tests;

(5) The nature of the defect or leak and the method of detection (i.e., visual inspection or instrument detection);

(6) The date the defect or leak was detected and the date of each attempt to repair the defect or leak;

(7) Repair methods applied in each attempt to repair the defect or leak;

(8) The reason for the delay if the defect or leak is not repaired within 15 days after discovery;

(9) The expected date of successful repair of the defect or leak if the repair is not completed within 15 days;

(10) The date of successful repair of the defect or leak;

(11) The position and duration of opening of bypass line valves and the condition of any valve seals; and

(12) The duration of the use of bypass valves on computer controlled valves.

(c) The owner or operator of a bleaching system complying with § 63.440(d)(3)(ii)(B) shall record the daily average chlorine and hypochlorite application rates, in kg of bleaching agent per megagram of ODP, of the bleaching system until the requirements specified in § 63.440(d)(3)(ii)(A) are met.

(d) The owner or operator shall record the CMS parameters specified in § 63.453 and meet the requirements specified in paragraph (a) of this section for any new affected process equipment or pulping process condensate stream that becomes subject to the standards in this subpart due to a process change or modification.

§ 63.455 Reporting requirements.

(a) Each owner or operator of a source subject to this subpart shall comply with the reporting requirements of subpart A of this part as specified in table 1 and all the following requirements in this section. The initial notification report specified under § 63.9(b)(2) of subpart A of this part shall be submitted by April 15, 1999.

(b) Each owner or operator of a kraft pulping system specified in § 63.440(d)(1) or a bleaching system specified in § 63.440(d)(3)(ii) shall submit, with the initial notification report specified under § 63.9(b)(2) of subpart A of this part and paragraph (a) of this section and update every two years thereafter, a non-binding control strategy report containing, at a minimum, the information specified in paragraphs (b)(1) through (b)(3) of this section in addition to the information required in § 63.9(b)(2) of subpart A of this part.

(1) A description of the emission controls or process modifications selected for compliance with the control requirements in this standard.

(2) A compliance schedule, including the dates by which each step toward compliance will be reached for each emission point or sets of emission points. At a minimum, the list of dates shall include:

(i) The date by which the major study(s) for determining the compliance strategy will be completed;

(ii) The date by which contracts for emission controls or process modifications will be awarded, or the date by which orders will be issued for the purchase of major components to accomplish emission controls or process changes;

(iii) The date by which on-site construction, installation of emission control equipment, or a process change is to be initiated;

(iv) The date by which on-site construction, installation of emissions control equipment, or a process change is to be completed;

(v) The date by which final compliance is to be achieved;

(vi) For compliance with paragraph § 63.440(d)(3)(ii), the tentative dates by which compliance with effluent limitation guidelines and standards intermediate pollutant load effluent reductions and as available, all the dates for the best available technology's milestones reported in the National Pollutant Discharge Elimination System authorized under section 402 of the Clean Water Act and for the best professional milestones in the Voluntary Advanced Technology Incentives Program under 40 CFR 430.24 (b)(2); and

(vii) The date by which the final compliance tests will be performed.

(3) Until compliance is achieved, revisions or updates shall be made to the control strategy report required by paragraph (b) of this section indicating the progress made towards completing the installation of the emission controls or process modifications during the 2-year period.

(c) The owner or operator of each bleaching system complying with § 63.440(d)(3)(ii)(B) shall certify in the report specified under § 63.10(e)(3) of subpart A of this part that the daily application rates of chlorine and hypochlorite for that bleaching system have not increased as specified in § 63.440(d)(3)(ii)(B) until the requirements of § 63.440(d)(3)(ii)(A) are met.

(d) The owner or operator shall meet the requirements specified in paragraph (a) of this section upon startup of any new affected process equipment or pulping process condensate stream that becomes subject to the standards of this subpart due to a process change or modification.

§ 63.456 [Reserved]

§ 63.457 Test methods and procedures.

(a) *Initial performance test.* An initial performance test is required for all emission sources subject to the limitations in §§ 63.443, 63.444, 63.445, 63.446, and 63.447, except those controlled by a combustion device that is designed and operated as specified in § 63.443(d)(3) or (d)(4).

(b) *Vent sampling port locations and gas stream properties.* For purposes of

selecting vent sampling port locations and determining vent gas stream properties, required in §§ 63.443, 63.444, 63.445, and 63.447, each owner or operator shall comply with the applicable procedures in paragraphs (b)(1) through (b)(6) of this section.

(1) Method 1 or 1A of part 60, appendix A, as appropriate, shall be used for selection of the sampling site as follows:

(i) To sample for vent gas concentrations and volumetric flow rates, the sampling site shall be located prior to dilution of the vent gas stream and prior to release to the atmosphere;

(ii) For determining compliance with percent reduction requirements, sampling sites shall be located prior to the inlet of the control device and at the outlet of the control device; measurements shall be performed simultaneously at the two sampling sites; and

(iii) For determining compliance with concentration limits or mass emission rate limits, the sampling site shall be located at the outlet of the control device.

(2) No traverse site selection method is needed for vents smaller than 0.10 meter (4.0 inches) in diameter.

(3) The vent gas volumetric flow rate shall be determined using Method 2, 2A, 2C, or 2D of part 60, appendix A, as appropriate.

(4) The moisture content of the vent gas shall be measured using Method 4 of part 60, appendix A.

(5) To determine vent gas concentrations, the owner or operator shall collect a minimum of three samples that are representative of normal conditions and average the resulting pollutant concentrations using the following procedures.

(i) Method 308 in Appendix A of this part shall be used to determine the methanol concentration.

(ii) Except for the modifications specified in paragraphs (b)(5)(ii)(A) through (b)(5)(ii)(K) of this section, Method 26A of part 60, appendix A shall be used to determine chlorine concentration in the vent stream.

(A) *Probe/Sampling Line.* A separate probe is not required. The sampling line shall be an appropriate length of 0.64 cm (0.25 in) OD Teflon tubing. The sample inlet end of the sampling line shall be inserted into the stack in such a way as to not entrain liquid condensation from the vent gases. The other end shall be connected to the impingers. The length of the tubing may vary from one sampling site to another, but shall be as short as possible in each situation. If sampling is conducted in sunlight, opaque tubing shall be used. Alternatively, if transparent tubing is used, it shall be covered with opaque tape.

(B) *Impinger Train.* Three 30 milliliter (ml) capacity midget impingers shall be connected in series to the sampling line. The impingers shall have regular tapered stems. Silica gel shall be placed in the third impinger as a desiccant. All impinger train connectors shall be glass and/or Teflon .

(C) *Critical Orifice.* The critical orifice shall have a flow rate of 200 to 250 ml/min and shall be followed by a vacuum pump capable of providing a vacuum of 640 millimeters of mercury (mm Hg). A 45 millimeter diameter in-line Teflon 0.8 micrometer filter shall follow the impingers to project the critical orifice and vacuum pump.

(D) The following are necessary for the analysis apparatus:

(*1*) Wash bottle filled with deionized water;

(*2*) 25 or 50 ml graduated burette and stand;

(*3*) Magnetic stirring apparatus and stir bar;

(*4*) Calibrated pH Meter;

(*5*) 150–250 ml beaker or flask; and

(*6*) A 5 ml pipette.

(E) The procedures listed in paragraphs (b)(5)(ii)(E)(*1*) through (b)(5)(ii)(E)(*7*) of this section shall be used to prepare the reagents.

(*1*) To prepare the 1 molarity (M) potassium dihydrogen phosphate solution, dissolve 13.61 grams (g) of potassium dihydrogen phosphate in water and dilute to 100 ml.

(*2*) To prepare the 1 M sodium hydroxide solution (NaOH), dissolve 4.0 g of sodium hydroxide in water and dilute to 100 ml.

(*3*) To prepare the buffered 2 percent potassium iodide solution, dissolve 20 g of potassium iodide in 900 ml water. Add 50 ml of the 1 M potassium dihydrogen phosphate solution and 30 ml of the 1 M sodium hydroxide solution. While stirring solution, measure the pH of solution electrometrically and add the 1 M sodium hydroxide solution to bring pH to between 6.95 and 7.05.

(*4*) To prepare the 0.1 normality (N) sodium thiosulfate solution, dissolve 25 g of sodium thiosulfate, pentahydrate, in 800 ml of freshly boiled and cooled distilled water in a 1-liter volumetric flask. Dilute to volume. To prepare the 0.01 N sodium thiosulfate solution, add 10.0 ml standardized 0.1 N sodium thiosulfate solution to a 100 ml volumetric flask, and dilute to volume with water.

(*5*) To standardize the 0.1 N sodium thiosulfate solution, dissolve 3.249 g of anhydrous potassium bi-iodate, primary standard quality, or 3.567 g potassium iodate dried at 103 +/ −2 degrees Centigrade for 1 hour, in distilled water and dilute to 1000 ml to yield a 0.1000 N solution. Store in a glass-stoppered bottle. To 80 ml distilled water, add, with constant stirring, 1 ml concentrated sulfuric acid, 10.00 ml 0.1000 N anhydrous potassium bi-iodate, and 1 g potassium iodide. Titrate immediately with 0.1 n sodium thiosulfate titrant until the yellow color of the liberated iodine is almost discharged. Add 1 ml starch indicator solution and continue titrating until the blue color disappears. The normality of the sodium thiosulfate solution is inversely proportional to the ml of sodium thiosulfate solution consumed:

$$\text{Normality of Sodium Thiosulfate} = \frac{1}{\text{ml Sodium Thiosulfate Consumed}}$$

(*6*) To prepare the starch indicator solution, add a small amount of cold water to 5 g starch and grind in a mortar to obtain a thin paste. Pour paste into 1 L of boiling distilled water, stir, and let settle overnight. Use clear supernate for starch indicator solution.

(*7*) To prepare the 10 percent sulfuric acid solution, add 10 ml of concentrated sulfuric acid to 80 ml water in an 100 ml volumetric flask. Dilute to volume.

(F) The procedures specified in paragraphs (b)(5)(ii)(F)(*1*) through (b)(5)(ii)(F)(*5*) of this section shall be used to perform the sampling.

(*1*) *Preparation of Collection Train.* Measure 20 ml buffered potassium iodide solution into each of the first two impingers and connect probe, impingers, filter, critical orifice, and pump. The sampling line and the impingers shall be shielded from sunlight.

(*2*) *Leak and Flow Check Procedure.* Plug sampling line inlet tip and turn on pump. If a flow of bubbles is visible in either of the liquid impingers, tighten fittings and adjust connections and

impingers. A leakage rate not in excess of 2 percent of the sampling rate is acceptable. Carefully remove the plug from the end of the probe. Check the flow rate at the probe inlet with a bubble tube flow meter. The flow should be comparable or slightly less than the flow rate of the critical orifice with the impingers off-line. Record the flow and turn off the pump.

(3) *Sample Collection.* Insert the sampling line into the stack and secure it with the tip slightly lower than the port height. Start the pump, recording the time. End the sampling after 60 minutes, or after yellow color is observed in the second in-line impinger. Record time and remove the tubing from the vent. Recheck flow rate at sampling line inlet and turn off pump. If the flow rate has changed significantly, redo sampling with fresh capture solution. A slight variation (less than 5 percent) in flow may be averaged. With the inlet end of the line elevated above the impingers, add about 5 ml water into the inlet tip to rinse the line into the first impinger.

(4) *Sample Analysis.* Fill the burette with 0.01 N sodium thiosulfate solution to the zero mark. Combine the contents of the impingers in the beaker or flask. Stir the solution and titrate with thiosulfate until the solution is colorless. Record the volume of the first endpoint (TN, ml). Add 5 ml of the 10 percent sulfuric acid solution, and continue the titration until the contents of the flask are again colorless. Record the total volume of titrant required to go through the first and to the second endpoint (TA, ml). If the volume of neutral titer is less than 0.5 ml, repeat the testing for a longer period of time. It is important that sufficient lighting be present to clearly see the endpoints, which are determined when the solution turns from pale yellow to colorless. A lighted stirring plate and a white background are useful for this purpose.

(5) *Interferences.* Known interfering agents of this method are sulfur dioxide and hydrogen peroxide. Sulfur dioxide, which is used to reduce oxidant residuals in some bleaching systems, reduces formed iodine to iodide in the capture solution. It is therefore a negative interference for chlorine, and in some cases could result in erroneous negative chlorine concentrations. Any agent capable of reducing iodine to iodide could interfere in this manner. A chromium trioxide impregnated filter will capture sulfur dioxide and pass chlorine and chlorine dioxide. Hydrogen peroxide, which is commonly used as a bleaching agent in modern bleaching systems, reacts with iodide to form iodine and thus can cause a positive interference in the chlorine measurement. Due to the chemistry involved, the precision of the chlorine analysis will decrease as the ratio of chlorine dioxide to chlorine increases. Slightly negative calculated concentrations of chlorine may occur when sampling a vent gas with high concentrations of chlorine dioxide and very low concentrations of chlorine.

(G) The following calculation shall be performed to determine the corrected sampling flow rate:

$$S_C = S_U \quad \frac{BP \quad PW}{760} \quad \frac{293}{273 + t}$$

Where:

S_C=Corrected (dry standard) sampling flow rate, liters per minute;
S_U=Uncorrected sampling flow rate, L/min;
BP=Barometric pressure at time of sampling;
PW=Saturated partial pressure of water vapor, mm Hg at temperature; and
t=Ambient temperature, ¥C.

(H) The following calculation shall be performed to determine the moles of chlorine in the sample:

$$Cl_2 Moles = 1/8000\left(5\ T_N \quad T_A\right) \quad N_{Thio}$$

Where:

T_N=Volume neutral titer, ml;
T_A=Volume acid titer (total), ml; and
N_{Thio}=Normality of sodium thiosulfate titrant.

(I) The following calculation shall be performed to determine the concentration of chlorine in the sample:

$$Cl_2 ppmv = \frac{3005\left(5\ T_N \quad T_A\right) \quad N_{Thio}}{S_C \quad t_S}$$

Where:

S_C=Corrected (dry standard) sampling flow rate, liters per minute;
t_S=Time sampled, minutes;
T_N=Volume neutral titer, ml;
T_A=Volume acid titer (total), ml; and
N_{Thio}=Normality of sodium thiosulfate titrant.

(J) The following calculation shall be performed to determine the moles of chlorine dioxide in the sample:

$$ClO_2\ Moles = 1/4000\left(T_A \quad T_N\right) \quad N_{Thio}$$

Where:

T_A=Volume acid titer (total), ml;
T_N=Volume neutral titer, ml; and
N_{Thio}=Normality of sodium thiosulfate titrant.

(K) The following calculation shall be performed to determine the concentration of chlorine dioxide in the sample:

$$ClO_2\ ppmv = \frac{6010\left(T_A \quad T_N\right) \quad N_{Thio}}{S_C \quad t_S}$$

Where:

S_C=Corrected (dry standard) sampling flow rate, liters per minute;
t_S=Time sampled, minutes;
T_A=Volume acid titer (total), ml;
T_N=Volume neutral titer, ml; and
N_{Thio}=Normality of sodium thiosulfate titrant.

(iii) Any other method that measures the total HAP or methanol concentration that has been demonstrated to the Administrator's satisfaction.

(6) The minimum sampling time for each of the three runs per method shall be 1 hour in which either an integrated sample or four grab samples shall be taken. If grab sampling is used, then the samples shall be taken at approximately equal intervals in time, such as 15 minute intervals during the run.

(c) *Liquid sampling locations and properties.* For purposes of selecting liquid sampling locations and for determining properties of liquid streams such as wastewaters, process waters, and condensates required in §§ 63.444, 63.446, and 63.447, the owner or operator shall comply with the following procedures:

(1) Samples shall be collected using the sampling procedures specified in Method 305 of part 60, appendix A;

(i) Where feasible, samples shall be taken from an enclosed pipe prior to the liquid stream being exposed to the atmosphere; and

(ii) When sampling from an enclosed pipe is not feasible, samples shall be collected in a manner to minimize exposure of the sample to the atmosphere and loss of HAP compounds prior to sampling.

(2) The volumetric flow rate of the entering and exiting liquid streams shall be determined using the inlet and outlet flow meters or other methods demonstrated to the Administrator's satisfaction. The volumetric flow rate measurements to determine actual mass removal shall be taken at the same time as the concentration measurements;

(3) To determine liquid stream total HAP or methanol concentrations, the owner or operator shall collect a minimum of three samples that are representative of normal conditions and average the resulting pollutant concentrations using one of the following:

(i) Method 305 in Appendix A of this part, adjusted using the following equation:

$$\overline{C} = \bullet_{i=1}^{n} C_i / fm_i$$

Where:

$\overline{C}$=Pollutant concentration for the liquid stream, parts per million by weight.

C_i=Measured concentration of pollutant i in the liquid stream sample determined using Method 305, parts per million by weight.

fm_i=Pollutant-specific constant that adjusts concentration measured by Method 305 to actual liquid concentration; the fm for methanol is 0.85. Additional pollutant fm values can be found in table 34, subpart G of this part.

n=Number of individual pollutants, i, summed to calculate total HAP.

(ii) Any other method that measures total HAP concentration that has been demonstrated to the Administrator's satisfaction.

(4) To determine soluble BOD_5 in the effluent stream from a biological treatment unit used to comply with §§ 63.446(e)(2) and 63.453(j), the owner or operator shall use Method 405.1, of part 136, with the following modifications:

(i) Filter the sample through the filter paper, into Erlenmeyer flask by applying a vacuum to the flask sidearm. Minimize the time for which vacuum is applied to prevent stripping of volatile organics from the sample. Replace filter paper as often as needed in order to maintain filter times of less than approximately 30 seconds per filter paper. No rinsing of sample container or filter bowl into the Erlenmeyer flask is allowed.

(ii) Perform Method 405.1 on the filtrate obtained in paragraph (c)(4) of this section. Dilution water shall be seeded with 1 milliliter of final effluent per liter of dilution water. Dilution ratios may require adjustment to reflect the lower oxygen demand of the filtered sample in comparison to the total BOD_5. Three BOD bottles and different dilutions shall be used for each sample.

(d) *Detectable leak procedures.* To measure detectable leaks for closed-vent systems as specified in § 63.450 or for pulping process wastewater collection systems as specified in § 63.446(d)(2)(i), the owner or operator shall comply with the following:

(1) Method 21, of part 60, appendix A; and

(2) The instrument specified in Method 21 shall be calibrated before use according to the procedures specified in Method 21 on each day that leak checks are performed. The following calibration gases shall be used:

(i) Zero air (less than 10 parts per million by volume of hydrocarbon in air); and

(ii) A mixture of methane or n-hexane and air at a concentration of approximately, but less than, 10,000 parts per million by volume methane or n-hexane.

(e) *Negative pressure procedures.* To demonstrate negative pressure at process equipment enclosure openings as specified in § 63.450(b), the owner or operator shall use one of the following procedures:

(1) An anemometer to demonstrate flow into the enclosure opening;

(2) Measure the static pressure across the opening;

(3) Smoke tubes to demonstrate flow into the enclosure opening; or

(4) Any other industrial ventilation test method demonstrated to the Administrator's satisfaction.

(f) *HAP concentration measurements.* For purposes of complying with the requirements in §§ 63.443, 63.444, and 63.447, the owner or operator shall measure the total HAP concentration as one of the following:

(1) As the sum of all individual HAP's; or

(2) As methanol.

(g) *Condensate HAP concentration measurement.* For purposes of complying with the kraft pulping condensate requirements in § 63.446, the owner or operator shall measure the total HAP concentration as methanol except for the purposes of complying with the initial performance test specified in § 63.457(a) for § 63.446(e)(2) and as specified in § 63.453(j)(2)(ii).

(h) *Bleaching HAP concentration measurement.* For purposes of complying with the bleaching system requirements in § 63.445, the owner or operator shall measure the total HAP concentration as the sum of all individual chlorinated HAP's or as chlorine.

(i) *Vent gas stream calculations.* To demonstrate compliance with the mass emission rate, mass emission rate per megagram of ODP, and percent reduction requirements for vent gas streams specified in §§ 63.443, 63.444, 63.445, and 63.447, the owner or operator shall use the following:

(1) The total HAP mass emission rate shall be calculated using the following equation:

$$E = K_2 \bullet_{j=1}^{n} C_j M_j \; Q_s$$

Where:

E=Mass emission rate of total HAP from the sampled vent, kilograms per hour.

K_2=Constant, 2.494 10^{-6} (parts per million by volume)$^{-1}$ (gram-mole per standard cubic meter) (kilogram/gram) (minutes/hour), where standard temperature for (gram-mole per standard cubic meter) is 20 °C.

C_j=Concentration on a dry basis of pollutant j in parts per million by volume as measured by the test methods specified in paragraph (b) of this section.

M_j=Molecular weight of pollutant j, gram/gram-mole.

Q_s=Vent gas stream flow rate (dry standard cubic meter per minute) at a temperature of 20 °C as indicated in paragraph (b) of this section.

n=Number of individual pollutants, i, summed to calculate total HAP.

(2) The total HAP mass emission rate per megagram of ODP shall be calculated using the following equation:

$$F = \frac{E}{P}$$

Where:

F=Mass emission rate of total HAP from the sampled vent, in kilograms per megagram of ODP.

E=Mass emission rate of total HAP from the sampled vent, in kilograms per hour determined as specified in paragraph (i)(1) of this section.

P=The production rate of pulp during the sampling period, in megagrams of ODP per hour.

(3) The total HAP percent reduction shall be calculated using the following equation:

$$R = \frac{E_i \quad E_O}{E_i}(100)$$

Where:

R=Efficiency of control device, percent.

Ei=Inlet mass emission rate of total HAP from the sampled vent, in kilograms of pollutant per hour, determined as specified in paragraph (i)(1) of this section.

E_o=Outlet mass emission rate of total HAP from the sampled vent, in kilograms of pollutant per hour, determined as specified in paragraph (i)(1) of this section.

(j) *Liquid stream calculations.* To demonstrate compliance with the mass flow rate, mass per megagram of ODP, and percent reduction requirements for liquid streams specified in § 63.446, the owner or operator shall use the following:

(1) The mass flow rates of total HAP or methanol entering and exiting the treatment process shall be calculated using the following equations:

$$E_b = \frac{K}{n \quad 10^6} \bullet_{i=1}^{n} V_{bi} C_{bi}$$

$$E_a = \frac{K}{n \quad 10^6} \bullet_{i=1}^{n} V_{ai} C_{ai}$$

Where:

E_b=Mass flow rate of total HAP or methanol in the liquid stream entering the treatment process, kilograms per hour.

E_a=Mass flow rate of total HAP or methanol in the liquid exiting the treatment process, kilograms per hour.

K=Density of the liquid stream, kilograms per cubic meter.

V_{bi}=Volumetric flow rate of liquid stream entering the treatment process during each run i, cubic meters per hour, determined as specified in paragraph (c) of this section.

V_{ai}=Volumetric flow rate of liquid stream exiting the treatment process during each run i, cubic meters per hour, determined as specified in paragraph (c) of this section.

C_{bi}=Concentration of total HAP or methanol in the stream entering the treatment process during each run i, parts per million by weight, determined as specified in paragraph (c) of this section.

C_{ai}=Concentration of total HAP or methanol in the stream exiting the treatment process during each run i, parts per million by weight, determined as specified in paragraph (c) of this section.

n=Number of runs.

(2) The mass of total HAP or methanol per megagram ODP shall be calculated using the following equation:

$$F = \frac{E_a}{P}$$

Where:

F=Mass loading of total HAP or methanol in the sample, in kilograms per megagram of ODP.

E_a=Mass flow rate of total HAP or methanol in the wastewater stream in kilograms per hour as determined using the procedures in paragraph (j)(1) of this section.

P=The production rate of pulp during the sampling period in megagrams of ODP per hour.

(3) The percent reduction of total HAP across the applicable treatment process shall be calculated using the following equation:

$$R = \frac{E_b \quad E_a}{E_b} \quad 100$$

Where:

R=Control efficiency of the treatment process, percent.

E_b=Mass flow rate of total HAP in the stream entering the treatment process, kilograms per hour, as determined in paragraph (j)(1) of this section.

E_a=Mass flow rate of total HAP in the stream exiting the treatment process, kilograms per hour, as determined in paragraph (j)(1) of this section.

(4) Compounds that meet the requirements specified in paragraphs (j)(4)(i) or (4)(ii) of this section are not required to be included in the mass flow rate, mass per megagram of ODP, or the mass percent reduction determinations.

(i) Compounds with concentrations at the point of determination that are below 1 part per million by weight; or

(ii) Compounds with concentrations at the point of determination that are below the lower detection limit where the lower detection limit is greater than 1 part per million by weight.

(k) *Oxygen concentration correction procedures.* To demonstrate compliance with the total HAP concentration limit of 20 ppmv in § 63.443(d)(2), the concentration measured using the methods specified in paragraph (b)(5) of this section shall be corrected to 10 percent oxygen using the following procedures:

(1) The emission rate correction factor and excess air integrated sampling and analysis procedures of Methods 3A or 3B of part 60, appendix A shall be used to determine the oxygen concentration. The samples shall be taken at the same time that the HAP samples are taken.

(2) The concentration corrected to 10 percent oxygen shall be computed using the following equation:

$$C_c = C_m \quad \frac{10.9}{20.9 \quad \%O_{2d}}$$

Where:

C_c=Concentration of total HAP corrected to 10 percent oxygen, dry basis, parts per million by volume.

C_m=Concentration of total HAP dry basis, parts per million by volume, as specified in paragraph (b) of this section.

$\%0_{2d}$=Concentration of oxygen, dry basis, percent by volume.

(1) *Biological treatment system percent reduction calculation.* To determine compliance with an open biological treatment system option specified in § 63.446(e)(2) and the monitoring requirements specified in § 63.453(j)(2), the percent reduction due to destruction in the biological treatment system shall be calculated using the following equation:

$R=f_{bio}$ 100

Where:

R=Destruction of total HAP or methanol in the biological treatment process, percent.

f_{bio}=The fraction of total HAP or methanol removed in the biological treatment system. The site-specific biorate constants shall be determined using the procedures specified and as limited in appendix C of part 63.

(m) *Condensate segregation procedures.* The following procedures shall be used to demonstrate compliance with the condensate segregation requirements specified in § 63.446(c).

(1) To demonstrate compliance with the percent mass requirements specified in § 63.446(c)(1), the procedures specified in paragraphs (m)(1)(i) through (m)(1)(iii) of this section shall be performed.

(i) Determine the total HAP mass of all condensates from each equipment system listed in § 63.446 (b)(1) through (b)(3) using the procedures specified in paragraphs (c) and (j) of this section.

(ii) Multiply the total HAP mass determine in paragraph (m)(1)(i) of this section by 0.65 to determine the target HAP mass for the high-HAP fraction condensate stream or streams.

(iii) Compliance with the segregation requirements specified in § 63.446(c)(1) is demonstrated if the condensate stream or streams from each equipment system listed in § 63.446 (b)(1) through (b)(3) being treated as specified in § 63.446(e) contain at least as much total HAP mass as the target total HAP mass determined in paragraph (m)(1)(ii) of this section.

(2) To demonstrate compliance with the percent mass requirements specified in § 63.446(c)(2), the procedures specified in paragraphs (m)(2)(i) through (m)(2)(ii) of this section shall be performed.

(i) Determine the total HAP mass contained in the high-HAP fraction condensates from each equipment system listed in § 63.446(b)(1) through (b)(3) and the total condensates streams from the equipment systems listed in § 63.446(b)(4) and (b)(5), using the procedures specified in paragraphs (c) and (j) of this section.

(ii) Compliance with the segregation requirements specified in § 63.446(c)(2) is demonstrated if the total HAP mass determined in paragraph (m)(2)(i) of this section is equal to or greater than the appropriate mass requirements specified in § 63.446(c)(2).

(n) *Biological treatment system monitoring sampling storage.* The inlet and outlet grab samples required to be collected in § 63.453(j)(2) shall be stored at 4ŸC (40ŸF) to minimize the biodegradation of the organic compounds in the samples.

§ 63.458 Delegation of authority.

(a) In delegating implementation and enforcement authority to a State under section 112(d) of the CAA, the authorities contained in paragraph (b) of this section shall be retained by the Administrator and not transferred to a State.

(b) Authorities which will not be delegated to States:

(1) Section 63.6(g)—Use of an alternative nonopacity emission standard;

(2) Section 63.453(m)—Use of an alternative monitoring parameter;

(3) Section 63.457(b)(5)(iii)—Use of an alternative test method for total HAP or methanol in vents; and

(4) Section 63.457(c)(3)(ii)—Use of an alternative test method for total HAP or methanol in wastewater.

§ 63.459 [Reserved]

TABLE 1 TO SUBPART S—GENERAL PROVISIONS APPLICABILITY TO SUBPART S [a]

Reference	Applies to Subpart S	Comment
63.1(a)(1)–(3)	Yes.	
63.1(a)(4)	Yes	Subpart S (this table) specifies applicability of each paragraph in subpart A to subpart S.
63.1(a)(5)	No	Section reserved.
63.1(a)(6)–(8)	Yes.	
63.1(a)(9)	No	Section reserved.
63.1(a)(10)	No	Subpart S and other cross-referenced subparts specify calendar or operating day.
63.1(a)(11)–(14)	Yes.	
63.1(b)(1)	No	Subpart S specifies its own applicability.
63.1(b)(2)–(3)	Yes.	
63.1(c)(1)–(2)	Yes.	
63.1(c)(3)	No	Section reserved.
63.1(c)(4)–(5)	Yes.	
63.1(d)	No	Section reserved.
63.1(e)	Yes.	
63.2	Yes.	
63.3	Yes.	
63.4(a)(1)	Yes.	
63.4(a)(3).		
63.4(a)(4)	No	Section reserved.
63.4(a)(5)	Yes.	
63.4(b)	Yes.	
63.4(c)	Yes.	
63.5(a)	Yes.	
63.5(b)(1)	Yes.	
63.5(b)(2)	No	Section reserved.
63.5(b)(3)	Yes.	
63.5(b)(4)–(6)	Yes.	
63.5(c)	No	Section reserved.
63.5(d)	Yes.	
63.5(e)	Yes.	
63.5(f)	Yes.	
63.6(a)	Yes.	
63.6(b)	No	Subpart S specifies compliance dates for sources subject to subpart S.
63.6(c)	No	Subpart S specifies compliance dates for sources subject to subpart S.
63.6(d)	No	Section reserved.
63.6(e)	Yes.	
63.6(f)	Yes.	
63.6(g)	Yes.	
63.6(h)	No	Pertains to continuous opacity monitors that are not part of this standard.
63.6(i)	Yes.	
63.6(j)	Yes.	
63.7	Yes.	
63.8(a)(1)	Yes.	
63.8(a)(2)	Yes.	
63.8(a)(3)	No	Section reserved.
63.8(a)(4)	Yes.	
63.8(b)(1)	Yes.	
63.8(b)(2)	No	Subpart S specifies locations to conduct monitoring.
63.8(b)(3)	Yes.	
63.8(c)(1)	Yes.	
63.8(c)(2)	Yes.	
63.8(c)(3)	Yes.	
63.8(c)(4)	No	Subpart S allows site specific determination of monitoring frequency in § 63.453(n)(4).
63.8(c)(5)	No	Pertains to continuous opacity monitors that are not part of this standard.
63.8(c)(6)	Yes.	
63.8(c)(7)	Yes.	
63.8(c)(8)	Yes.	
63.8(d)	Yes.	
63.8(e)	Yes.	
63.8(f)(1)–(5)	Yes.	
63.8(f)(6)	No	Subpart S does not specify relative accuracy test for CEM's.
63.8(g)	Yes.	
63.9(a)	Yes.	
63.9(b)	Yes	Initial notifications must be submitted within one year after the source becomes subject to the relevant standard.
63.9(c)	Yes.	
63.9(d)	No	Special compliance requirements are only applicable to kraft mills.
63.9(e)	Yes.	
63.9(f)	No	Pertains to continuous opacity monitors that are not part of this standard.

TABLE 1 TO SUBPART S—GENERAL PROVISIONS APPLICABILITY TO SUBPART S [a]—Continued

Reference	Applies to Subpart S	Comment
63.9(g)(1)	Yes.	
63.9(g)(2)	No	Pertains to continuous opacity monitors that are not part of this standard.
63.9(g)(3)	No	Subpart S does not specify relative accuracy tests, therefore no notification is required for an alternative.
63.9(h)	Yes.	
63.9(i)	Yes.	
63.9(j)	Yes.	
63.10(a)	Yes.	
63.10(b)	Yes.	
63.10(c)	Yes.	
63.10(d)(1)	Yes.	
63.10(d)(2)	Yes.	
63.10(d)(3)	No	Pertains to continuous opacity monitors that are not part of this standard.
63.10(d)(4)	Yes.	
63.10(d)(5)	Yes.	
63.10(e)(1)	Yes.	
63.10(e)(2)(i)	Yes.	
63.10(e)(2)(ii)	No	Pertains to continuous opacity monitors that are not part of this standard.
63.10(e)(3)	Yes.	
63.10(e)(4)	No	Pertains to continuous opacity monitors that are not part of this standard.
63.10(f)	Yes.	
63.11–63.15	Yes.	

[a] Wherever subpart A specifies "postmark" dates, submittals may be sent by methods other than the U.S. Mail (e.g., by fax or courier). Submittals shall be sent by the specified dates, but a postmark is not required.

3. Appendix A of part 63 is amended by adding Method 308 in numerical order to read as follows:

Appendix A to Part 63—Test Methods

* * * * *

Method 308—Procedure for Determination of Methanol Emission From Stationary Sources

1.0 Scope and Application

1.1 Analyte. Methanol. Chemical Abstract Service (CAS) No. 67–56–1.

1.2 Applicability. This method applies to the measurement of methanol emissions from specified stationary sources.

2.0 Summary of Method

A gas sample is extracted from the sampling point in the stack. The methanol is collected in deionized distilled water and adsorbed on silica gel. The sample is returned to the laboratory where the methanol in the water fraction is separated from other organic compounds with a gas chromatograph (GC) and is then measured by a flame ionization detector (FID). The fraction adsorbed on silica gel is extracted with an aqueous solution of n-propanol and is then separated and measured by GC/FID.

3.0 Definitions [Reserved]

4.0 Interferences [Reserved]

5.0 Safety

5.1 Disclaimer. This method may involve hazardous materials, operations, and equipment. This test method does not purport to address all of the safety problems associated with its use. It is the responsibility of the user of this test method to establish appropriate safety and health practices and to determine the applicability of regulatory limitations before performing this test method.

5.2 Methanol Characteristics. Methanol is flammable and a dangerous fire and explosion risk. It is moderately toxic by ingestion and inhalation.

6.0 Equipment and Supplies

6.1 Sample Collection. The following items are required for sample collection:

6.1.1 Sampling Train. The sampling train is shown in Figure 308–1 and component parts are discussed below.

6.1.1.1 Probe. Teflon , approximately 6-millimeter (mm) (0.24 inch) outside diameter.

6.1.1.2 Impinger. A 30-milliliter (ml) midget impinger. The impinger must be connected with leak-free glass connectors. Silicone grease may not be used to lubricate the connectors.

6.1.1.3 Adsorbent Tube. Glass tubes packed with the required amount of the specified adsorbent.

6.1.1.4 Valve. Needle valve, to regulate sample gas flow rate.

6.1.1.5 Pump. Leak-free diaphragm pump, or equivalent, to pull gas through the sampling train. Install a small surge tank between the pump and rate meter to eliminate the pulsation effect of the diaphragm pump on the rotameter.

6.1.1.6 Rate Meter. Rotameter, or equivalent, capable of measuring flow rate to within 2 percent of the selected flow rate of up to 1000 milliliter per minute (ml/min). Alternatively, the tester may use a critical orifice to set the flow rate.

6.1.1.7 Volume Meter. Dry gas meter (DGM), sufficiently accurate to measure the sample volume to within 2 percent, calibrated at the selected flow rate and conditions actually encountered during sampling, and equipped with a temperature sensor (dial thermometer, or equivalent) capable of measuring temperature accurately to within 3 °C (5.4 °F).

6.1.1.8 Barometer. Mercury (Hg), aneroid, or other barometer capable of measuring atmospheric pressure to within 2.5 mm (0.1 inch) Hg. See the NOTE in Method 5 (40 CFR part 60, appendix A), section 6.1.2.

6.1.1.9 Vacuum Gauge and Rotameter. At least 760-mm (30-inch) Hg gauge and 0- to 40-ml/min rotameter, to be used for leak-check of the sampling train.

6.2 Sample Recovery. The following items are required for sample recovery:

6.2.1 Wash Bottles. Polyethylene or glass, 500-ml, two.

6.2.2 Sample Vials. Glass, 40-ml, with Teflon -lined septa, to store impinger samples (one per sample).

6.2.3 Graduated Cylinder. 100-ml size.

6.3 Analysis. The following are required for analysis:

6.3.1 Gas Chromatograph. GC with an FID, programmable temperature control, and heated liquid injection port.

6.3.2 Pump. Capable of pumping 100 ml/min. For flushing sample loop.

6.3.3 Flow Meter. To monitor accurately sample loop flow rate of 100 ml/min.

6.3.4 Regulators. Two-stage regulators used on gas cylinders for GC and for cylinder standards.

6.3.5 Recorder. To record, integrate, and store chromatograms.

6.3.6 Syringes. 1.0- and 10-microliter (l) size, calibrated, for injecting samples.

6.3.7 Tubing Fittings. Stainless steel, to plumb GC and gas cylinders.

6.3.8 Vials. Two 5.0-ml glass vials with screw caps fitted with Teflon -lined septa for each sample.

6.3.9 Pipettes. Volumetric type, assorted sizes for preparing calibration standards.

6.3.10 Volumetric Flasks. Assorted sizes for preparing calibration standards.

6.3.11 Vials. Glass 40-ml with Teflon -lined septa, to store calibration standards (one per standard).

7.0 Reagents and Standards

Note: Unless otherwise indicated, all reagents must conform to the specifications established by the Committee on Analytical Reagents of the American Chemical Society. Where such specifications are not available, use the best available grade.

7.1 Sampling. The following are required for sampling:

7.1.1 Water. Deionized distilled to conform to the American Society for Testing and Materials (ASTM) Specification D 1193–77, Type 3. At the option of the analyst, the potassium permanganate ($KMnO_4$) test for oxidizable organic matter may be omitted when high concentrations of organic matter are not expected to be present.

7.1.2 Silica Gel. Deactivated chromatographic grade 20/40 mesh silica gel packed in glass adsorbent tubes. The silica gel is packed in two sections. The front section contains 520 milligrams (mg) of silica gel, and the back section contains 260 mg.

7.2 Analysis. The following are required for analysis:

7.2.1 Water. Same as specified in section 7.1.1.

7.2.2 n-Propanol, 3 Percent. Mix 3 ml of n-propanol with 97 ml of water.

7.2.3 Methanol Stock Standard. Prepare a methanol stock standard by weighing 1 gram of methanol into a 100-ml volumetric flask. Dilute to 100 ml with water.

7.2.3.1 Methanol Working Standard. Prepare a methanol working standard by pipetting 1 ml of the methanol stock standard into a 100-ml volumetric flask. Dilute the solution to 100 ml with water.

7.2.3.2 Methanol Standards For Impinger Samples. Prepare a series of methanol standards by pipetting 1, 2, 5, 10, and 25 ml of methanol working standard solution respectively into five 50-ml volumetric flasks. Dilute the solutions to 50 ml with water. These standards will have 2, 4, 10, 20, and 50 ∝g/ml of methanol, respectively. After preparation, transfer the solutions to 40-ml glass vials capped with Teflon septa and store the vials under refrigeration. Discard any excess solution.

7.2.3.3 Methanol Standards for Adsorbent Tube Samples. Prepare a series of methanol standards by first pipetting 10 ml of the methanol working standard into a 100-ml volumetric flask and diluting the contents to exactly 100 ml with 3 percent n-propanol solution. This standard will contain 10 ∝g/ml of methanol. Pipette 5, 15, and 25 ml of this standard, respectively, into four 50-ml volumetric flasks. Dilute each solution to 50 ml with 3 percent n-propanol solution. These standards will have 1, 3, and 5 ∝g/ml of methanol, respectively. Transfer all four standards into 40-ml glass vials capped with Teflon -lined septa and store under refrigeration. Discard any excess solution.

7.2.4 GC Column. Capillary column, 30 meters (100 feet) long with an inside diameter (ID) of 0.53 mm (0.02 inch), coated with DB 624 to a film thickness of 3.0 micrometers, (∝m) or an equivalent column. Alternatively, a 30-meter capillary column coated with polyethylene glycol to a film thickness of 1 ∝m such as AT–WAX or its equivalent.

7.2.5 Helium. Ultra high purity.

7.2.6 Hydrogen. Zero grade.

7.2.7 Oxygen. Zero grade.

8.0 Procedure

8.1 Sampling. The following items are required for sampling:

8.1.1 Preparation of Collection Train. Measure 20 ml of water into the midget impinger. The adsorbent tube must contain 520 mg of silica gel in the front section and 260 mg of silica gel in the backup section. Assemble the train as shown in Figure 308–1. An optional, second impinger that is left empty may be placed in front of the water-containing impinger to act as a condensate trap. Place crushed ice and water around the impinger.

BILLING CODE 6560–50–P

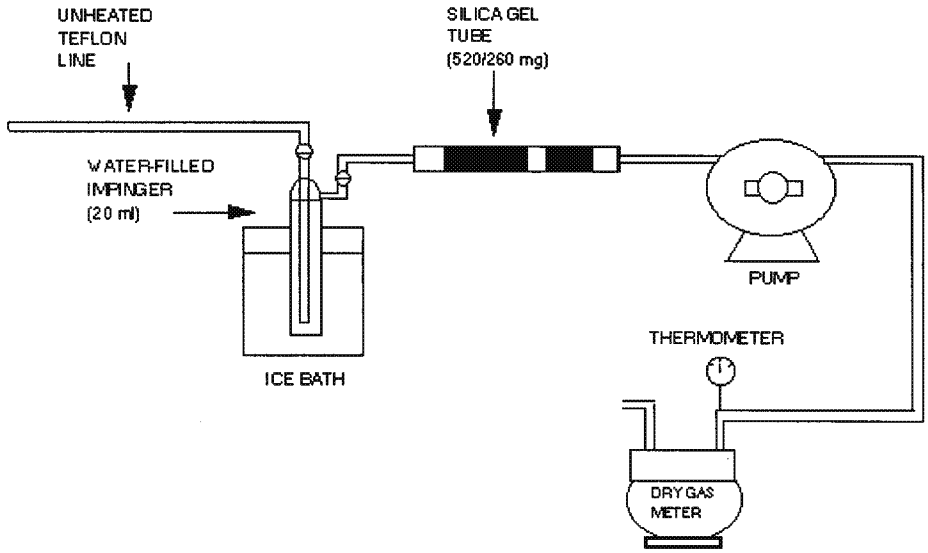

Figure 308.1. Sampling train schematic

BILLING CODE 6560–50–C

8.1.2 Leak Check. A leak check prior to the sampling run is optional; however, a leak check after the sampling run is mandatory. The leak-check procedure is as follows:

Temporarily attach a suitable (e.g., 0- to 40-ml/min) rotameter to the outlet of the DGM, and place a vacuum gauge at or near the probe inlet. Plug the probe inlet, pull a vacuum of at least 250 mm (10 inch) Hg, and note the flow rate as indicated by the rotameter. A leakage rate not in excess of 2 percent of the average sampling rate is acceptable.

Note: Carefully release the probe inlet plug before turning off the pump.

8.1.3 Sample Collection. Record the initial DGM reading and barometric pressure. To begin sampling, position the tip of the Teflon tubing at the sampling point, connect the tubing to the impinger, and start the pump. Adjust the sample flow to a constant rate between 200 and 1000 ml/min as indicated by the rotameter. Maintain this constant rate (±10 percent) during the entire sampling run. Take readings (DGM, temperatures at DGM and at impinger outlet, and rate meter) at least every 5 minutes. Add more ice during the run to keep the temperature of the gases leaving the last impinger at 20 °C (68 °F) or less. At the conclusion of each run, turn off the pump, remove the Teflon tubing from the stack, and record the final readings. Conduct a leak check as in section 8.1.2. (This leak check is mandatory.) If a leak is found, void the test run or use procedures acceptable to the Administrator to adjust the sample volume for the leakage.

8.2 Sample Recovery. The following items are required for sample recovery:

8.2.1 Impinger. Disconnect the impinger. Pour the contents of the midget impinger into a graduated cylinder. Rinse the midget impinger and the connecting tubes with water, and add the rinses to the graduated cylinder. Record the sample volume. Transfer the sample to a glass vial and cap with a Teflon septum. Discard any excess sample. Place the samples in an ice chest for shipment to the laboratory.

8.2.2. Adsorbent Tubes. Seal the silica gel adsorbent tubes and place them in an ice chest for shipment to the laboratory.

9.0 Quality Control

9.1 Miscellaneous Quality Control Measures. The following quality control measures are required:

Section	Quality control measure	Effect
8.1.2, 8.1.3, 10.1.	Sampling equipment leak check and calibration.	Ensures accurate measurement of sample volume.
10.2	GC calibration ..	Ensures precision of GC analysis.

9.2 Applicability. When the method is used to analyze samples to demonstrate compliance with a source emission regulation, an audit sample must be analyzed, subject to availability.

9.3 Audit Procedure. Analyze an audit sample with each set of compliance samples. Concurrently analyze the audit sample and a set of compliance samples in the same manner to evaluate the technique of the analyst and the standards preparation. The same analyst, analytical reagents, and analytical system shall be used both for the compliance samples and the EPA audit sample.

9.4 Audit Sample Availability. Audit samples will be supplied only to enforcement agencies for compliance tests. Audit samples may be obtained by writing: Source Test Audit Coordinator (MD–77B), Air Measurement Research Division, National Exposure Research Laboratory, U.S. Environmental Protection Agency, Research Triangle Park, NC 27711; or by calling the Source Test Audit Coordinator (STAC) at (919) 541–7834. The audit sample request must be made at least 30 days prior to the scheduled compliance sample analysis.

9.5 Audit Results. Calculate the audit sample concentration according to the calculation procedure provided in the audit instructions included with the audit sample. Fill in the audit sample concentration and the analyst's name on the audit response form included with the audit instructions. Send one copy to the EPA Regional Office or the appropriate enforcement agency and a second copy to the STAC. The EPA Regional office or the appropriate enforcement agency will report the results of the audit to the laboratory being audited. Include this response with the results of the compliance samples in relevant reports to the EPA Regional Office or the appropriate enforcement agency.

10.0 Calibration and Standardization

10.1 Metering System. The following items are required for the metering system:

10.1.1 Initial Calibration.

10.1.1.1 Before its initial use in the field, first leak-check the metering system (drying tube, needle valve, pump, rotameter, and DGM) as follows: Place a vacuum gauge at the inlet to the drying tube, and pull a vacuum of 250 mm (10 inch) Hg; plug or pinch off the outlet of the flow meter, and then turn off the pump. The vacuum shall remain stable for at least 30 seconds. Carefully release the vacuum gauge before releasing the flow meter end.

10.1.1.2 Next, remove the drying tube, and calibrate the metering system (at the sampling flow rate specified by the method) as follows: Connect an appropriately sized wet test meter (e.g., 1 liter per revolution (0.035 cubic feet per revolution)) to the inlet of the drying tube. Make three independent calibrations runs, using at least five revolutions of the DGM per run. Calculate the calibration factor, Y (wet test meter calibration volume divided by the DGM volume, both volumes adjusted to the same reference temperature and pressure), for each run, and average the results. If any Y-value deviates by more than 2 percent from the average, the metering system is unacceptable for use. Otherwise, use the average as the calibration factor for subsequent test runs.

10.1.2 Posttest Calibration Check. After each field test series, conduct a calibration check as in section 10.1.1 above, except for the following variations: (a) The leak check is not to be conducted, (b) three, or more revolutions of the DGM may be used, and (c) only two independent runs need be made. If the calibration factor does not deviate by more than 5 percent from the initial calibration factor (determined in section 10.1.1), then the DGM volumes obtained during the test series are acceptable. If the calibration factor deviates by more than 5 percent, recalibrate the metering system as in section 10.1.1, and for the calculations, use the calibration factor (initial or recalibration) that yields the lower gas volume for each test run.

10.1.3 Temperature Sensors. Calibrate against mercury-in-glass thermometers.

10.1.4 Rotameter. The rotameter need not be calibrated, but should be cleaned and maintained according to the manufacturer's instruction.

10.1.5 Barometer. Calibrate against a mercury barometer.

10.2 Gas Chromatograph. The following procedures are required for the gas chromatograph:

10.2.1 Initial Calibration. Inject 1 ∝l of each of the standards prepared in sections 7.2.3.3 and 7.2.3.4 into the GC and record the response. Repeat the injections for each standard until two successive injections agree within 5 percent. Using the mean response for

each calibration standard, prepare a linear least squares equation relating the response to the mass of methanol in the sample. Perform the calibration before analyzing each set of samples.

10.2.2 Continuing Calibration. At the beginning of each day, analyze the mid level calibration standard as described in section 10.5.1. The response from the daily analysis must agree with the response from the initial calibration within 10 percent. If it does not, the initial calibration must be repeated.

11.0 Analytical Procedure

11.1 Gas Chromatograph Operating Conditions. The following operating conditions are required for the GC:

11.1.1 Injector. Configured for capillary column, splitless, 200 °C (392 °F).

11.1.2 Carrier. Helium at 10 ml/min.

11.1.3 Oven. Initially at 45 °C for 3 minutes; then raise by 10 °C to 70 °C; then raise by 70 °C/min to 200 °C.

11.2 Impinger Sample. Inject 1 µl of the stored sample into the GC. Repeat the injection and average the results. If the sample response is above that of the highest calibration standard, either dilute the sample until it is in the measurement range of the calibration line or prepare additional calibration standards. If the sample response is below that of the lowest calibration standard, prepare additional calibration standards. If additional calibration standards are prepared, there shall be at least two that bracket the response of the sample. These standards should produce approximately 50 percent and 150 percent of the response of the sample.

11.3 Silica Gel Adsorbent Sample. The following items are required for the silica gel adsorbent samples:

11.3.1 Preparation of Samples. Extract the front and backup sections of the adsorbent tube separately. With a file, score the glass adsorbent tube in front of the first section of silica gel. Break the tube open. Remove and discard the glass wool. Transfer the first section of the silica gel to a 5-ml glass vial and stopper the vial. Remove the spacer between the first and second section of the adsorbent tube and discard it. Transfer the second section of silica gel to a separate 5-ml glass vial and stopper the vial.

11.3.2 Desorption of Samples. Add 3 ml of the 10 percent n-propanol solution to each of the stoppered vials and shake or vibrate the vials for 30 minutes.

11.3.3 Inject a 1-µl aliquot of the diluted sample from each vial into the GC. Repeat the injection and average the results. If the sample response is above that of the highest calibration standard, either dilute the sample until it is in the measurement range of the calibration line or prepare additional calibration standards. If the sample response is below that of the lowest calibration standard, prepare additional calibration standards. If additional calibration standards are prepared, there shall be at least two that bracket the response of the sample. These standards should produce approximately 50 percent and 150 percent of the response of the sample.

12.0 Data Analysis and Calculations

12.1 Nomenclature.

C_{af}=Concentration of methanol in the front of the adsorbent tube, µg/ml.

C_{ab}=Concentration of methanol in the back of the adsorbent tube, µg/ml.

C_i=Concentration of methanol in the impinger portion of the sample train, µg/ml.

E=Mass emission rate of methanol, µg/hr (lb/hr).

M_{tot}=Total mass of methanol collected in the sample train, µg.

P_{bar}=Barometric pressure at the exit orifice of the DGM, mm Hg (in. Hg).

P_{std}=Standard absolute pressure, 760 mm Hg (29.92 in. Hg).

Q_{std}=Dry volumetric stack gas flow rate corrected to standard conditions, dscm/hr (dscf/hr).

T_m=Average DGM absolute temperature, degrees K (°R).

T_{std}=Standard absolute temperature, 293 degrees K (528 °R).

V_{af}=Volume of front half adsorbent sample, ml.

V_{ab}=Volume of back half adsorbent sample, ml.

V_i=Volume of impinger sample, ml.

V_m=Dry gas volume as measured by the DGM, dry cubic meters (dcm), dry cubic feet (dcf).

$V_{m(std)}$=Dry gas volume measured by the DGM, corrected to standard conditions, dry standard cubic meters (dscm), dry standard cubic feet (dscf).

12.2 Mass of Methanol. Calculate the total mass of methanol collected in the sampling train using Equation 308–1.

$$M_{tot} = V_i C_i + V_{af} C_{af} + V_{ab} C_{ab} \qquad \text{Equation 308-1}$$

12.3 Dry Sample Gas Volume, Corrected to Standard Conditions. Calculate the volume of gas sampled at standard conditions using Equation 308–2.

$$V_m(std) = \frac{V_m Y T_{std} P_{bar}}{T_m P_{std}} \qquad \text{Equation 308-2}$$

12.4 Mass Emission Rate of Methanol. Calculate the mass emission rate of methanol using Equation 308–3.

$$E = \frac{M_{tot} Q_{sd}}{V_{m(std)}} \qquad \text{Equation 308-3}$$

13.0 Method Performance [Reserved]

14.0 Pollution Prevention [Reserved]

15.0 Waste Management [Reserved]

16.0 Bibliography

1. Rom, J.J. "Maintenance, Calibration, and Operation of Isokinetic Source Sampling Equipment." Office of Air Programs, Environmental Protection Agency. Research Triangle Park, NC. APTD–0576 March 1972.

2. Annual Book of ASTM Standards. Part 31; Water, Atmospheric Analysis. American Society for Testing and Materials. Philadelphia, PA. 1974. pp. 40–42.

3. Westlin, P.R. and R.T. Shigehara. "Procedure for Calibrating and Using Dry Gas Volume Meters as Calibration Standards." Source Evaluation Society Newsletter. *3*(1) :17–30. February 1978.

4. Yu, K.K. "Evaluation of Moisture Effect on Dry Gas Meter Calibration." Source Evaluation Society Newsletter. *5*(1) :24–28. February 1980.

5. NIOSH Manual of Analytical Methods, Volume 2. U.S. Department of Health and Human Services National Institute for Occupational Safety and Health. Center for Disease Control. 4676

Columbia Parkway, Cincinnati, OH 45226. (available from the Superintendent of Documents, Government Printing Office, Washington, DC 20402.)

6. Pinkerton, J.E. "Method for Measuring Methanol in Pulp Mill Vent Gases." National Council of the Pulp and Paper Industry for Air and Stream Improvement, Inc., New York, NY.

17.0 Tables, Diagrams, Flowcharts, and Validation Data

[Reserved].

* * * * *

PART 261—[AMENDED]

1. The authority citation of part 261 continues to read as follows:

Authority: 42 U.S.C. 6905, 6912(a), 6921, 6922, and 6938.

2. Section 261.4 is amended by adding paragraph (a) (15) to read as follows:

§ 261.4 Exclusions.

(a) * * *

(15) Condensates derived from the overhead gases from kraft mill steam strippers that are used to comply with 40 CFR 63.446(e). The exemption applies only to combustion at the mill generating the condensates.

* * * * *

1. Part 430 is revised to read as follows:

PART 430—THE PULP, PAPER, AND PAPERBOARD POINT SOURCE CATEGORY

General Provisions

Sec.
430.00 Applicability.
430.01 General definitions.
430.02 Monitoring requirements.
430.03 Best management practices (BMPs) for spent pulping liquor, soap, and turpentine management, spill prevention, and control.

Subpart A—Dissolving Kraft Subcategory

Sec.
430.10 Applicability; description of the dissolving kraft subcategory.
430.11 Specialized definitions.
430.12 Effluent limitations representing the degree of effluent reduction attainable by the application of best practicable control technology currently available (BPT).
430.13 Effluent limitations guidelines representing the degree of effluent reduction attainable by the best conventional pollutant control technology (BCT).
430.14 Effluent limitations representing the degree of effluent reduction attainable by the application of best available technology economically achievable (BAT).
430.15 New source performance standards (NSPS).
430.16 Pretreatment standards for existing sources (PSES).
430.17 Pretreatment standards for new sources (PSNS).

Subpart B—Bleached Papergrade Kraft and Soda Subcategory

Sec.
430.20 Applicability; description of the bleached papergrade kraft and soda subcategory.
430.21 Specialized definitions.
430.22 Effluent limitations representing the degree of effluent reduction attainable by the application of best practicable control technology currently available (BPT).
430.23 Effluent limitations representing the degree of effluent reduction attainable by the best conventional pollutant control technology (BCT).
430.24 Effluent limitations representing the degree of effluent reduction attainable by the application of best available technology economically achievable (BAT).
430.25 New source performance standards (NSPS).
430.26 Pretreatment standards for existing sources (PSES).
430.27 Pretreatment standards for new sources (PSNS).
430.28 Best management practices (BMPs).

Subpart C—Unbleached Kraft Subcategory

Sec.
430.30 Applicability; description of the unbleached kraft subcategory.
430.31 Specialized definitions.
430.32 Effluent limitations representing the degree of effluent reduction attainable by the application of best practicable control technology currently available (BPT).
430.33 Effluent limitations representing the degree of effluent reduction attainable by the best conventional pollutant control technology (BCT).
430.34 Effluent limitations representing the degree of effluent reduction attainable by the application of best available technology economically achievable (BAT).
430.35 New source performance standards (NSPS).
430.36 Pretreatment standards for existing (PSES).
430.37 Pretreatment standards for new sources (PSNS).

Subpart D—Dissolving Sulfite Subcategory

Sec.
430.40 Applicability; description of the dissolving sulfite subcategory.
430.41 Specialized definitions.
430.42 Effluent limitations representing the degree of effluent reduction attainable by the application of best practicable control technology currently available (BPT).
430.43 Effluent limitations representing the degree of effluent reduction attainable by the best conventional pollutant control technology (BCT).
430.44 Effluent limitations representing the degree of effluent reduction attainable by the application of best available technology economically achievable (BAT).
430.45 New source performance standards (NSPS).
430.46 Pretreatment standards for existing sources (PSES).
430.47 Pretreatment standards for new sources (PSNS).

Subpart E—Papergrade Sulfite Subcategory

Sec.
430.50 Applicability; description of the papergrade sulfite subcategory.
430.51 Specialized definitions.
430.52 Effluent limitations representing the degree of effluent reduction attainable by the application of best practicable control technology currently available (BPT).
430.53 Effluent limitations representing the degree of effluent reduction attainable by the best conventional pollutant control technology (BCT).
430.54 Effluent limitations representing the degree of effluent reduction attainable by the application of best available technology economically achievable (BAT).
430.55 New source performance standards (NSPS).
430.56 Pretreatment standards for existing sources (PSES).
430.57 Pretreatment standards for new sources (PSNS).
430.58 Best management practices (BMPs).

Subpart F—Semi-Chemical Subcategory

Sec.
430.60 Applicability; description of the semi-chemical subcategory.
430.61 Specialized definitions.
430.62 Effluent limitations representing the degree of effluent reduction attainable by the application of best practicable control technology currently available (BPT).
430.63 Effluent limitations representing the degree of effluent reduction attainable by the best conventional pollutant control technology (BCT).
430.64 Effluent limitations representing the degree of effluent reduction attainable by the application of best available technology economically achievable (BAT).
430.65 New source performance standards (NSPS).
430.66 Pretreatment standards for existing sources (PSES).
430.67 Pretreatment standards for new sources (PSNS).

Subpart G—Mechanical Pulp Subcategory

Sec.
430.70 Applicability; description of the mechanical pulp subcategory.
430.71 Specialized definitions.
430.72 Effluent limitations representing the degree of effluent reduction attainable by the application of best practicable control technology currently available (BPT).

430.73 Effluent limitations representing the degree of effluent reduction attainable by the best conventional pollutant control technology (BCT).
430.74 Effluent limitations representing the degree of effluent reduction attainable by the application of best available technology economically achievable (BAT).
430.75 New source performance standards (NSPS).
430.76 Pretreatment standards for existing sources (PSES).
430.77 Pretreatment standards for new sources (PSNS).

Subpart H—Non-Wood Chemical Pulp Subcategory

Sec.
430.80 Applicability; description of the non-wood chemical pulp subcategory.
430.81 Specialized definitions.
430.82 Effluent limitations representing the degree of effluent reduction attainable by the application of best practicable control technology currently available (BPT). [Reserved]
430.83 Effluent limitations representing the degree of effluent reduction attainable by the best conventional pollutant control technology (BCT). [Reserved]
430.84 Effluent limitations representing the degree of effluent reduction attainable by the application of best available technology economically achievable (BAT). [Reserved]
430.85 New source performance standards (NSPS). [Reserved]
430.86 Pretreatment standards for existing sources (PSES). [Reserved]
430.87 Pretreatment standards for new sources (PSNS). [Reserved]

Subpart I—Secondary Fiber Deink Subcategory

Sec.
430.90 Applicability; description of the secondary fiber deink subcategory.
430.91 Specialized definitions.
430.92 Effluent limitations representing the degree of effluent reduction attainable by the application of best practicable control technology currently available (BPT).
430.93 Effluent limitations representing the degree of effluent reduction attainable by the best conventional pollutant control technology (BCT).
430.94 Effluent limitations representing the degree of effluent reduction attainable by the application of best available technology economically achievable (BAT).
430.95 New source performance standards (NSPS).
430.96 Pretreatment standards for existing sources (PSES).
430.97 Pretreatment standards for new sources (PSNS).

Subpart J—Secondary Fiber Non-Deink Subcategory

Sec.
430.100 Applicability; description of the secondary fiber non-deink subcategory.
430.101 Specialized definitions.
430.102 Effluent limitations representing the degree of effluent reduction attainable by the application of best practicable control technology currently available (BPT).
430.103 Effluent limitations representing the degree of effluent reduction attainable by the best conventional pollutant control technology (BCT).
430.104 Effluent limitations representing the degree of effluent reduction attainable by the application of best available technology economically achievable (BAT).
430.105 New source performance standards (NSPS).
430.106 Pretreatment standards for existing sources (PSES).
430.107 Pretreatment standards for new sources (PSNS).

Subpart K—Fine and Lightweight Papers From Purchased Pulp Subcategory

Sec.
430.110 Applicability; description of the fine and lightweight papers from purchased pulp subcategory.
430.111 Specialized definitions.
430.112 Effluent limitations representing the degree of effluent reduction attainable by the application of best practicable control technology currently available (BPT).
430.113 Effluent limitations representing the degree of effluent reduction attainable by the best conventional pollutant control technology (BCT).
430.114 Effluent limitations representing the degree of effluent reduction attainable by the application of best available technology economically achievable (BAT).
430.115 New source performance standards (NSPS).
430.116 Pretreatment standards for existing sources (PSES).
430.117 Pretreatment standards for new sources (PSNS).

Subpart L—Tissue, Filter, Non-Woven, and Paperboard From Purchased Pulp Subcategory

Sec.
430.120 Applicability; description of the tissue, filter, non-woven, and paperboard from purchased pulp subcategory.
430.121 Specialized definitions.
430.122 Effluent limitations representing the degree of effluent reduction attainable by the application of best practicable control technology currently available (BPT).
430.123 Effluent limitations representing the degree of effluent reduction attainable by the best conventional pollutant control technology (BCT).
430.124 Effluent limitations representing the degree of effluent reduction attainable by the application of best available technology economically achievable (BAT).
430.125 New source performance standards (NSPS).
430.126 Pretreatment standards for existing sources (PSES).
430.127 Pretreatment standards for new sources (PSNS).

Appendix A to Part 430—Methods 1650 and 1653

Authority: Sections 301, 304, 306, 307, 308, 402, and 501 of the Clean Water Act, as amended, (33 U.S.C. 1311, 1314, 1316, 1317, 1318, 1342, and 1361), and Section 112 of the Clean Air Act, as amended (42 U.S.C. 7412).

General Provisions

§ 430.00 Applicability.

(a) This part applies to any pulp, paper, or paperboard mill that discharges or may discharge process wastewater pollutants to the waters of the United States, or that introduces or may introduce process wastewater pollutants into a publicly owned treatment works.

(b) The following table presents the subcategorization scheme codified in this part, with references to former subpart designations contained in the 1997 edition of 40 CFR parts 425 through 699:

SUBCATEGORIZATION SCHEME WITH REFERENCES TO FORMER SUBPARTS CONTAINED IN THE JULY 1, 1997 EDITION OF 40 CFR PARTS 425 THROUGH 699

Final codified subpart	Final subcategorization scheme	Types of products covered in the subpart
A	Dissolving Kraft	Dissolving pulp at kraft mills (F[a])
B	Bleached Papergrade Kraft and Soda.	Market pulp at bleached kraft mills (G[a]); paperboard, coarse paper, and tissue paper at bleached kraft mills (H[a]); pulp and fine papers at bleached kraft mills (I[a]); and pulp and paper at soda mills (P[a]).
C	Unbleached Kraft	Pulp and paper at unbleached kraft mills including linerboard or bag paper and other mixed products (A[a]); pulp and paper using the unbleached kraft-neutral sulfite semi-chemical (cross recovery) process (D[a]); and pulp and paper at combined unbleached kraft and semi-chemical mills, wherein the spent semi-chemical cooking liquor is burned within the unbleached kraft chemical recovery system (V[a]).
D	Dissolving Sulfite	Pulp at dissolving sulfite mills for the following grades: nitration, viscose, cellophane, and acetate (K[a]).
E	Papergrade Sulfite —Calcium-, Magnesium-, or Sodium-based pulps. —Ammonium-based pulps. —Specialty grade pulps.	Pulp and paper at papergrade sulfite mills where blow pit pulp washing techniques are used (J[a]) and pulp and paper at papergrade sulfite mills where vacuum or pressure drums are used to wash pulp (U[a]).
F	Semi-Chemical	Pulp and paper at semi-chemical mills using an ammonia base or a sodium base (B[a]).
G	Mechanical Pulp	Pulp and paper at groundwood chemi-mechanical mills (L[a]); pulp and paper at groundwood mills through the application of the thermo-mechanical process (M[a]); pulp and coarse paper, molded pulp products, and newsprint at groundwood mills (N[a]); and pulp and fine paper at groundwood mills (O[a]).
H	Non-Wood Chemical Pulp	Pulp and paper at non-wood chemical pulp mills.
I	Secondary Fiber Deink	Pulp and paper at deink mills including fine papers, tissue papers, or newsprint (Q[a]).
J	Secondary Fiber Non-Deink	Paperboard from wastepaper from noncorrugating medium furnish or from corrugating medium furnish (E[a]); tissue paper from wastepaper without deinking at secondary fiber mills (T[a]); molded products from wastepaper without deinking (W[a]); and builders' paper and roofing felt from wastepaper (40 CFR Part 431, Subpart A[a]).
K	Fine and Lightweight Papers from Purchased Pulp.	Fine Papers at nonintegrated mills using wood fiber furnish or cotton fiber furnish (R[a]); and lightweight papers at nonintegrated mills or lightweight electrical papers at nonintegrated mills (X[a]).
L	Tissue, Filter, Non-woven, and Paperboard from Purchased Pulp.	Tissue papers at nonintegrated mills (S[a]); filter and non-woven papers at nonintegrated mills (Y[a]); and paperboard at nonintegrated mills (Z[a]).

[a] This subpart is contained in the 40 CFR parts 425 through 699, edition revised as of July 1, 1997.

§ 430.01 General definitions.

In addition to the definitions set forth in 40 CFR part 401 and 40 CFR 403.3, the following definitions apply to this part:

(a) *Adsorbable organic halides (AOX).* A bulk parameter that measures the total mass of chlorinated organic matter in water and wastewater.

(b) *Annual average.* The mean concentration, mass loading or production-normalized mass loading of a pollutant over a period of 365 consecutive days (or such other period of time determined by the permitting authority to be sufficiently long to encompass expected variability of the concentration, mass loading, or production-normalized mass loading at the relevant point of measurement).

(c) *Bleach plant.* All process equipment used for bleaching beginning with the first application of bleaching agents (e.g., chlorine, chlorine dioxide, ozone, sodium or calcium hypochlorite, or peroxide), each subsequent extraction stage, and each subsequent stage where bleaching agents are applied to the pulp. For mills in Subpart E of this part producing specialty grades of pulp, the bleach plant includes process equipment used for the hydrolysis or extraction stages prior to the first application of bleaching agents. Process equipment used for oxygen delignification prior to the application of bleaching agents is not part of the bleach plant.

(d) *Bleach plant effluent.* The total discharge of process wastewaters from the bleach plant from each physical bleach line operated at the mill, comprising separate acid and alkaline filtrates or the combination thereof.

(e) *Chemical oxygen demand (COD).* A bulk parameter that measures the oxygen-consuming capacity of organic and inorganic matter present in water or wastewater. It is expressed as the amount of oxygen consumed from a chemical oxidant in a specific test.

(f) *Elemental chlorine-free (ECF).* Any process for bleaching pulps in the absence of elemental chlorine and hypochlorite that uses exclusively chlorine dioxide as the only chlorine-containing bleaching agent.

(g) *End of the pipe.* The point at which final mill effluent is discharged to waters of the United States or introduced to a POTW.

(h) *Fiber line.* A series of operations employed to convert wood or other fibrous raw material into pulp. If the final product is bleached pulp, the fiber line encompasses pulping, de-knotting, brownstock washing, pulp screening, centrifugal cleaning, and multiple bleaching and washing stages.

(i) *Minimum level (ML).* The level at which the analytical system gives recognizable signals and an acceptable calibration point. The following minimum levels apply to pollutants in this part.

Pollutant	Method	Minimum level
2,3,7,8-TCDD	1613	10 pg/L [a]
2,3,7,8-TCDF	1613	10 pg/L [a]
Trichlorosyringol	1653	2.5 ug/L [b]
3,4,5-Trichlorocatechol	1653	5.0 ug/L [b]
3,4,6-Trichlorocatechol	1653	5.0 ug/L [b]
3,4,5-Trichloroguaiacol	1653	2.5 ug/L [b]
3,4,6-Trichloroguaiacol	1653	2.5 ug/L [b]
4,5,6-Trichloroguaiacol	1653	2.5 ug/L [b]
2,4,5-Trichlorophenol	1653	2.5 ug/L [b]
2,4,6-Trichlorophenol	1653	2.5 ug/L [b]
Tetrachlorocatechol	1653	5.0 ug/L [b]
Tetrachloroguaiacol	1653	5.0 ug/L [b]
2,3,4,6-Tetrachlorophenol	1653	2.5 ug/L [b]
Pentachlorophenol	1653	5.0 ug/L [b]
AOX	1650	20 ug/L [b]

[a] Picograms per liter.
[b] Micrograms per liter.

(j) *New source.* (1) Notwithstanding the criteria codified at 40 CFR 122.29(b)(1), a source subject to subpart B or E of this part is a "new source" if it meets the definition of "new source" at 40 CFR 122.2 and:

(i) It is constructed at a site at which no other source is located; or

(ii) It totally replaces the process or production equipment that causes the discharge of pollutants at an existing source, including the total replacement of a fiber line that causes the discharge of pollutants at an existing source, except as provided in paragraph (j)(2) of this section; or

(iii) Its processes are substantially independent of an existing source at the same site. In determining whether these processes are substantially independent, the Director shall consider such factors as the extent to which the new facility is integrated with the existing plant; and the extent to which the new facility is engaged in the same general type of activity as the existing source.

(2) The following are examples of changes made by mills subject to subparts B or E of this part that alone do not cause an existing mill to become a "new source":

(i) Upgrades of existing pulping operations;

(ii) Upgrades or replacement of pulp screening and washing operations;

(iii) Installation of extended cooking and/or oxygen delignification systems or other post-digester, pre-bleaching delignification systems;

(iv) Bleach plant modifications including changes in methods or amounts of chemical applications, new chemical applications, installation of new bleaching towers to facilitate replacement of sodium or calcium hypochlorite, and installation of new pulp washing systems; or

(v) Total replacement of process or production equipment that causes the discharge of pollutants at an existing source (including a replacement fiber line), but only if such replacement is performed for the purpose of achieving limitations that have been included in the discharger's NPDES permit pursuant to § 430.24(b).

(k) *Non-continuous discharger.* (1) Except as provided in paragraph (k)(2) of this section, a non-continuous discharger is a mill which is prohibited by the NPDES authority from discharging pollutants during specific periods of time for reasons other than treatment plant upset control, such periods being at least 24 hours in duration. A mill shall not be deemed a non-continuous discharger unless its permit, in addition to setting forth the prohibition described above, requires compliance with the effluent limitations established for non-continuous dischargers and also requires compliance with maximum day and average of 30 consecutive days effluent limitations. Such maximum day and average of 30 consecutive days effluent limitations for non-continuous dischargers shall be established by the NPDES authority in the form of concentrations which reflect wastewater treatment levels that are representative of the application of the best practicable control technology currently available, the best conventional pollutant control technology, or new source performance standards in lieu of the maximum day and average of 30 consecutive days effluent limitations for conventional pollutants set forth in each subpart.

(2) A mill is a non-continuous discharger for the purposes of determining applicable effluent limitations under subpart B or E of this part (other than conventional limits for existing sources) if, for reasons other than treatment plant upset control (e.g., protecting receiving water quality), the mill is prohibited by the NPDES authority from discharging pollutants during specific periods of time or if it is required to release its discharge on a variable flow or pollutant loading rate basis.

(l) *POTW.* Publicly owned treatment works as defined at 40 CFR 403.3(o).

(m) *Process wastewater.* For subparts B and E only, process wastewater is any water that, during manufacturing or processing, comes into direct contact with or results from the production or use of any raw material, intermediate product, finished product, byproduct, or waste product. For purposes of subparts B and E of this part, process wastewater includes boiler blowdown; wastewaters from water treatment and other utility operations; blowdowns from high rate (e.g., greater than 98 percent) recycled non-contact cooling water systems to the extent they are mixed and co-treated with other process wastewaters; wastewater, including leachates, from landfills owned by pulp and paper mills subject to subpart B or E of this part if the wastewater is commingled with wastewater from the mill's manufacturing or processing facility; and storm waters from the immediate process areas to the extent they are mixed and co-treated with other process wastewaters. For purposes of this part, contaminated groundwaters from on-site or off-site groundwater remediation projects are not process wastewater.

(n) *Production.* (1) For all limitations and standards specified in this part except those pertaining to AOX and chloroform: Production shall be defined as the annual off-the-machine production (including off-the-machine coating where applicable) divided by the number of operating days during that year. Paper and paperboard production shall be measured at the off-the-machine moisture content, except for subpart C of this part (as it pertains to pulp and paperboard production at

unbleached kraft mills including linerboard or bag paper and other mixed products, and to pulp and paperboard production using the unbleached kraft neutral sulfite semi-chemical (cross recovery) process), and subparts F and J of this part (as they pertain to paperboard production from wastepaper from noncorrugating medium furnish or from corrugating medium furnish) where paper and paperboard production shall be measured in air-dry-tons (10% moisture content). Market pulp shall be measured in air-dry tons (10% moisture). Production shall be determined for each mill based upon past production practices, present trends, or committed growth.

(2) For AOX and chloroform limitations and standards specified in subparts B and E of this part: Production shall be defined as the annual unbleached pulp production entering the first stage of the bleach plant divided by the number of operating days during that year. Unbleached pulp production shall be measured in air-dried-metric-tons (10% moisture) of brownstock pulp entering the bleach plant at the stage during which chlorine or chlorine-containing compounds are first applied to the pulp. In the case of bleach plants that use totally chlorine free bleaching processes, unbleached pulp production shall be measured in air-dried-metric tons (10% moisture) of brownstock pulp entering the first stage of the bleach plant from which wastewater is discharged. Production shall be determined for each mill based upon past production practices, present trends, or committed growth.

(o) *TCDD.* 2,3,7,8-tetrachlorodibenzo-p-dioxin.

(p) *TCDF.* 2,3,7,8-tetrachlorodibenzo-p-furan.

(q) *Totally chlorine-free (TCF) bleaching.* Pulp bleaching operations that are performed without the use of chlorine, sodium hypochlorite, calcium hypochlorite, chlorine dioxide, chlorine monoxide, or any other chlorine-containing compound.

(r) *Wet Barking.* Wet barking operations shall be defined to include hydraulic barking operations and wet drum barking operations which are those drum barking operations that use substantial quantities of water in either water sprays in the barking drums or in a partial submersion of the drums in a "tub" of water.

§ 430.02 Monitoring requirements.

This section establishes minimum monitoring frequencies for certain pollutants. Where no monitoring frequency is specified in this section or where the duration of the minimum monitoring frequency has expired under paragraphs (b) through (e) of this section, the permit writer or pretreatment control authority shall determine the appropriate monitoring frequency in accordance with 40 CFR 122.44(i) or 40 CFR part 403, as applicable.

(a) *BAT, NSPS, PSES, and PSNS monitoring frequency for chlorinated organic pollutants.* The following monitoring frequencies apply to discharges subject to subpart B or subpart E of this part:

CAS number	Pollutant	Minimum monitoring frequency	
		Non-TCF[a]	TCF[b]
1198556	Tetrachlorocatechol	Monthly	([c])
2539175	Tetrachloroguaiacol	Monthly	([c])
2539266	Trichlorosyringol	Monthly	([c])
2668248	4,5,6-trichloroguaiacol	Monthly	([c])
32139723	3,4,6-trichlorocatechol	Monthly	([c])
56961207	3,4,5-trichlorocatechol	Monthly	([c])
57057837	3,4,5-trichloroguaiacol	Monthly	([c])
58902	2,3,4,6-tetrachlorophenol	Monthly	([c])
60712449	3,4,6-trichloroguaiacol	Monthly	([c])
87865	Pentachlorophenol[d]	Monthly	([c])
88062	2,4,6-trichlorophenol[d]	Monthly	([c])
95954	2,4,5-trichlorophenol[d]	Monthly	([c])
1746016	2,3,7,8-TCDD	Monthly	([c])
51207319	2,3,7,8-TCDF	Monthly	([c])
67663	chloroform[e]	Weekly	([c])
59473040	AOX[f]	Daily	None specified.

[a] Non-TCF: Pertains to any fiber line that does not use exclusively TCF bleaching processes.

[b] TCF: Pertains to any fiber line that uses exclusively TCF bleaching processes, as disclosed by the discharger in its permit application under 40 CFR 122.21(g)(3) and certified under 40 CFR 122.22 or, for indirect dischargers, as reported to the pretreatment control authority under 40 CFR 403.12 (b), (d), or (e).

[c] This regulation does not specify a limit for this pollutant for TCF bleaching processes.

[d] Monitoring frequency does not apply to this compound when used as a biocide. The permitting or pretreatment control authority must determine the appropriate monitoring frequency for this compound, when used as a biocide, under 40 CFR 122.44(i) or 40 CFR Part 403, as applicable.

[e] This regulation does not specify a limit for this pollutant for Subpart E mills.

[f] This regulation does not specify a limit for this pollutant for the ammonium-based or specialty grade sulfite pulp segments of Subpart E.

(b) *Duration of required monitoring for BAT, NSPS, PSES, and PSNS.* The monitoring frequencies specified in paragraph (a) of this section apply for the following time periods:

(1) For direct dischargers, a duration of five years commencing on the date the applicable limitations or standards from subpart B or subpart E of this part are first included in the discharger's NPDES permit;

(2) For existing indirect dischargers, until April 17, 2006;

(3) For new indirect dischargers, a duration of five years commencing on the date the indirect discharger commences operation.

(c) *Reduced monitoring frequencies for bleach plant pollutants under the Voluntary Advanced Technology Incentives Program.* The following monitoring frequencies apply to mills enrolled in the Voluntary Advanced Technology Incentives Program established under subpart B of this part for a duration of five years commencing after achievement of the applicable BAT limitations specified in § 430.24(b)(3) or NSPS specified in § 430.25(c)(1) for the following pollutants, except as noted in footnote f:

CAS number	Pollutant	Minimum monitoring frequency		
		Non-ECF [a]	Advanced ECF [b,f]	TCF [c]
1198556	Tetrachlorocatechol	Monthly	Monthly	([d])
2539175	Tetrachloroguiacol	Monthly	Monthly	([d])
2539266	Trichlorosyringol	Monthly	Monthly	([d])
2668248	4,5,6-trichloroguaiacol	Monthly	Monthly	([d])
32139723	3,4,6-trichlorocatechol	Monthly	Monthly	([d])
56961207	3,4,5-trichlorocatechol	Monthly	Monthly	([d])
57057837	3,4,5-trichloroguaiacol	Monthly	Monthly	([d])
58902	2,3,4,6-tetrachlorophenol	Monthly	Monthly	([d])
60712449	3,4,6-trichloroguaiacol	Monthly	Monthly	([d])
87865	Pentachlorophenol [e]	Monthly	Monthly	([d])
88062	2,4,6-trichlorophenol [e]	Monthly	Monthly	([d])
95954	2,4,5-trichlorophenol [e]	Monthly	Monthly	([d])
1746016	2,3,7,8-TCDD	Monthly	Monthly	([d])
51207319	2,3,7,8-TCDF	Monthly	Monthly	([d])
67663	Chloroform	Weekly	Monthly	([d])

[a] Non-ECF: Pertains to any fiber line that does not use exclusively ECF or TCF bleaching processes.
[b] Advanced ECF: Pertains to any fiber line that uses exclusively Advanced ECF bleaching processes, or exclusively ECF and TCF bleaching processes as disclosed by the discharger in its permit application under 40 CFR 122.21(g)(3) and certified under 40 CFR 122.22. Advanced ECF consists of the use of extended delignification or other technologies that achieve at least the Tier I performance levels specified in § 430.24(b)(4)(i).
[c] TCF: Pertains to any fiber line that uses exclusively TCF bleaching processes, as disclosed by the discharger in its permit application under 40 CFR 122.21(g)(3) and certified under 40 CFR 122.22.
[d] This regulation does not specify a limit for this pollutant for TCF bleaching processes.
[e] Monitoring frequency does not apply to this compound when used as a biocide. The permitting authority must determine the appropriate monitoring frequency for this compound, when used as a biocide, under 40 CFR 122.44(i).
[f] Monitoring requirements for these pollutants by mills certifying as Advanced ECF in their NPDES permit application or other communication to the permitting authority will be suspended after one year of monitoring. The permitting authority must determine the appropriate monitoring frequency for these pollutants beyond that time under 40 CFR 122.44(i).

(d) *Reduced monitoring frequencies for AOX under the Voluntary Advanced Technology Incentives Program (year one).* The following monitoring frequencies apply to direct dischargers enrolled in the Voluntary Advanced Technology Incentives Program established under Subpart B of this part for a duration of one year after achievement of the applicable BAT limitations specified in § 430.24(b)(4)(i) or NSPS specified in § 430.25(c)(2):

CAS number	Pollutant	Non-ECF, any tier [a]	Advanced ECF, any tier [b]	TCF, any tier [c]
59473040	AOX	Daily	Weekly	None specified.

[a] Non-ECF: Pertains to any fiber line that does not use exclusively ECF or TCF bleaching processes.
[b] Advanced ECF: Pertains to any fiber line that uses exclusively Advanced ECF bleaching processes or exclusively ECF and TCF bleaching processes, as disclosed by the discharger in its permit application under 40 CFR 122.21(g)(3) and certified under 40 CFR 122.22. Advanced ECF consists of the use of extended delignification or other technologies that achieve at least the Tier I performance levels specified in § 430.24(b)(4)(i).
[c] TCF: Pertains to any fiber line that uses exclusively TCF bleaching processes, as disclosed by the discharger in its permit application under 40 CFR 122.21(g)(3) and certified under 40 CFR 122.22.

(e) *Reduced monitoring frequencies for AOX under the Voluntary Advanced Technology Incentives Program (years two through five).* The following monitoring frequencies apply to mills enrolled in the Voluntary Advanced Technology Incentives Program established under Subpart B of this part for a duration of four years starting one year after achievement of the applicable BAT limitations specified in § 430.24(b)(4)(i) or NSPS specified in § 430.25(c)(2):

CAS number	Pollutant	Non-ECF any tier [a]	Advanced ECF—tier I [b]	Advanced ECF—tier II [b]	Advanced ECF—tier III [b]	TCF—any tier [c]
59473040	AOX	Daily	Monthly	Quarterly	Annually	None specified.

[a] Non-ECF: Pertains to any fiber line that does not use exclusively ECF or TCF bleaching processes.
[b] Advanced ECF: Pertains to any fiber line that uses exclusively Advanced ECF bleaching processes or exclusively ECF and TCF bleaching processes, as disclosed by the discharger in its permit application under 40 CFR 122.21(g)(3) and certified under 40 CFR 122.22. Advanced ECF consists of the use of extended delignification or other technologies that achieve at least the Tier I performance levels specified in § 430.24(b)(4)(i).
[c] TCF: Pertains to any fiber line that uses exclusively TCF bleaching processes, as disclosed by the discharger in its permit application under 40 CFR 122.21(g)(3) and certified under 40 CFR 122.22.

§ 430.03 Best management practices (BMPs) for spent pulping liquor, soap, and turpentine management, spill prevention, and control.

(a) *Applicability.* This section applies to direct and indirect discharging pulp, paper, and paperboard mills with pulp production in subparts B (Bleached Papergrade Kraft and Soda) and E (Papergrade Sulfite).

(b) *Specialized definitions.* (1) *Action Level:* A daily pollutant loading that when exceeded triggers investigative or corrective action. Mills determine action levels by a statistical analysis of six months of daily measurements collected at the mill. For example, the lower action level may be the 75th percentile of the running seven-day averages (that value exceeded by 25 percent of the running seven-day averages) and the upper action level may be the 90th percentile of the running seven-day averages (that value exceeded by 10 percent of the running seven-day averages).

(2) *Equipment Items in Spent Pulping Liquor, Soap, and Turpentine Service:* Any process vessel, storage tank, pumping system, evaporator, heat exchanger, recovery furnace or boiler, pipeline, valve, fitting, or other device that contains, processes, transports, or comes into contact with spent pulping liquor, soap, or turpentine. Sometimes referred to as "equipment items."

(3) *Immediate Process Area:* The location at the mill where pulping, screening, knotting, pulp washing, pulping liquor concentration, pulping liquor processing, and chemical recovery facilities are located, generally the battery limits of the aforementioned processes. "Immediate process area" includes spent pulping liquor storage and spill control tanks located at the mill, whether or not they are located in the immediate process area.

(4) *Intentional Diversion:* The planned removal of spent pulping liquor, soap, or turpentine from equipment items in spent pulping liquor, soap, or turpentine service by the mill for any purpose including, but not limited to, maintenance, grade changes, or process shutdowns.

(5) *Mill:* The owner or operator of a direct or indirect discharging pulp, paper, or paperboard manufacturing facility subject to this section.

(6) *Senior Technical Manager:* The person designated by the mill manager to review the BMP Plan. The senior technical manager shall be the chief engineer at the mill, the manager of pulping and chemical recovery operations, or other such responsible person designated by the mill manager who has knowledge of and responsibility for pulping and chemical recovery operations.

(7) *Soap:* The product of reaction between the alkali in kraft pulping liquor and fatty acid portions of the wood, which precipitate out when water is evaporated from the spent pulping liquor.

(8) *Spent Pulping Liquor:* For kraft and soda mills "spent pulping liquor" means black liquor that is used, generated, stored, or processed at any point in the pulping and chemical recovery processes. For sulfite mills "spent pulping liquor" means any intermediate, final, or used chemical solution that is used, generated, stored, or processed at any point in the sulfite pulping and chemical recovery processes (e.g., ammonium-, calcium-, magnesium-, or sodium-based sulfite liquors).

(9) *Turpentine:* A mixture of terpenes, principally pinene, obtained by the steam distillation of pine gum recovered from the condensation of digester relief gases from the cooking of softwoods by the kraft pulping process. Sometimes referred to as sulfate turpentine.

(c) *Requirement to implement Best Management Practices.* Each mill subject to this section must implement the Best Management Practices (BMPs) specified in paragraphs (c)(1) through (10) of this section. The primary objective of the BMPs is to prevent leaks and spills of spent pulping liquors, soap, and turpentine. The secondary objective is to contain, collect, and recover at the immediate process area, or otherwise control, those leaks, spills, and intentional diversions of spent pulping liquor, soap, and turpentine that do occur. BMPs must be developed according to best engineering practices and must be implemented in a manner that takes into account the specific circumstances at each mill. The BMPs are as follows:

(1) The mill must return spilled or diverted spent pulping liquors, soap, and turpentine to the process to the maximum extent practicable as determined by the mill, recover such materials outside the process, or discharge spilled or diverted material at a rate that does not disrupt the receiving wastewater treatment system.

(2) The mill must establish a program to identify and repair leaking equipment items. This program must include:

(i) Regular visual inspections (e.g., once per day) of process areas with equipment items in spent pulping liquor, soap, and turpentine service;

(ii) Immediate repairs of leaking equipment items, when possible. Leaking equipment items that cannot be repaired during normal operations must be identified, temporary means for mitigating the leaks must be provided, and the leaking equipment items repaired during the next maintenance outage;

(iii) Identification of conditions under which production will be curtailed or halted to repair leaking equipment items or to prevent pulping liquor, soap, and turpentine leaks and spills; and

(iv) A means for tracking repairs over time to identify those equipment items where upgrade or replacement may be warranted based on frequency and severity of leaks, spills, or failures.

(3) The mill must operate continuous, automatic monitoring systems that the mill determines are necessary to detect and control leaks, spills, and intentional diversions of spent pulping liquor, soap, and turpentine. These monitoring systems should be integrated with the mill process control system and may include, e.g., high level monitors and alarms on storage tanks; process area conductivity (or pH) monitors and alarms; and process area sewer, process wastewater, and wastewater treatment plant conductivity (or pH) monitors and alarms.

(4) The mill must establish a program of initial and refresher training of operators, maintenance personnel, and other technical and supervisory personnel who have responsibility for operating, maintaining, or supervising the operation and maintenance of equipment items in spent pulping liquor, soap, and turpentine service. The refresher training must be conducted at least annually and the training program must be documented.

(5) The mill must prepare a brief report that evaluates each spill of spent pulping liquor, soap, or turpentine that is not contained at the immediate process area and any intentional diversion of spent pulping liquor, soap, or turpentine that is not contained at the immediate process area. The report must describe the equipment items involved, the circumstances leading to the incident, the effectiveness of the corrective actions taken to contain and recover the spill or intentional diversion, and plans to develop changes to equipment and operating and maintenance practices as necessary to prevent recurrence. Discussion of the reports must be included as part of the annual refresher training.

(6) The mill must establish a program to review any planned modifications to the pulping and chemical recovery facilities and any construction activities in the pulping and chemical recovery areas before these activities commence. The purpose of such review is to prevent leaks and spills of spent

pulping liquor, soap, and turpentine during the planned modifications, and to ensure that construction and supervisory personnel are aware of possible liquor diversions and of the requirement to prevent leaks and spills of spent pulping liquors, soap, and turpentine during construction.

(7) The mill must install and maintain secondary containment (i.e., containment constructed of materials impervious to pulping liquors) for spent pulping liquor bulk storage tanks equivalent to the volume of the largest tank plus sufficient freeboard for precipitation. An annual tank integrity testing program, if coupled with other containment or diversion structures, may be substituted for secondary containment for spent pulping liquor bulk storage tanks.

(8) The mill must install and maintain secondary containment for turpentine bulk storage tanks.

(9) The mill must install and maintain curbing, diking or other means of isolating soap and turpentine processing and loading areas from the wastewater treatment facilities.

(10) The mill must conduct wastewater monitoring to detect leaks and spills, to track the effectiveness of the BMPs, and to detect trends in spent pulping liquor losses. Such monitoring must be performed in accordance with paragraph (i) of this section.

(d) *Requirement to develop a BMP Plan.* (1) Each mill subject to this section must prepare and implement a BMP Plan. The BMP Plan must be based on a detailed engineering review as described in paragraphs (d)(2) and (3) of this section. The BMP Plan must specify the procedures and the practices required for each mill to meet the requirements of paragraph (c) of this section, the construction the mill determines is necessary to meet those requirements including a schedule for such construction, and the monitoring program (including the statistically derived action levels) that will be used to meet the requirements of paragraph (i) of this section. The BMP Plan also must specify the period of time that the mill determines the action levels established under paragraph (h) of this section may be exceeded without triggering the responses specified in paragraph (i) of this section.

(2) Each mill subject to this section must conduct a detailed engineering review of the pulping and chemical recovery operations—including but not limited to process equipment, storage tanks, pipelines and pumping systems, loading and unloading facilities, and other appurtenant pulping and chemical recovery equipment items in spent pulping liquor, soap, and turpentine service—for the purpose of determining the magnitude and routing of potential leaks, spills, and intentional diversions of spent pulping liquors, soap, and turpentine during the following periods of operation:

(i) Process start-ups and shut downs;
(ii) Maintenance;
(iii) Production grade changes;
(iv) Storm or other weather events;
(v) Power failures; and
(vi) Normal operations.

(3) As part of the engineering review, the mill must determine whether existing spent pulping liquor containment facilities are of adequate capacity for collection and storage of anticipated intentional liquor diversions with sufficient contingency for collection and containment of spills. The engineering review must also consider:

(i) The need for continuous, automatic monitoring systems to detect and control leaks and spills of spent pulping liquor, soap, and turpentine;

(ii) The need for process wastewater diversion facilities to protect end-of-pipe wastewater treatment facilities from adverse effects of spills and diversions of spent pulping liquors, soap, and turpentine;

(iii) The potential for contamination of storm water from the immediate process areas; and

(iv) The extent to which segregation and/or collection and treatment of contaminated storm water from the immediate process areas is appropriate.

(e) *Amendment of BMP Plan.* (1) Each mill subject to this section must amend its BMP Plan whenever there is a change in mill design, construction, operation, or maintenance that materially affects the potential for leaks or spills of spent pulping liquor, turpentine, or soap from the immediate process areas.

(2) Each mill subject to this section must complete a review and evaluation of the BMP Plan five years after the first BMP Plan is prepared and, except as provided in paragraph (e)(1) of this section, once every five years thereafter. As a result of this review and evaluation, the mill must amend the BMP Plan within three months of the review if the mill determines that any new or modified management practices and engineered controls are necessary to reduce significantly the likelihood of spent pulping liquor, soap, and turpentine leaks, spills, or intentional diversions from the immediate process areas, including a schedule for implementation of such practices and controls.

(f) *Review and certification of BMP Plan.* The BMP Plan, and any amendments thereto, must be reviewed by the senior technical manager at the mill and approved and signed by the mill manager. Any person signing the BMP Plan or its amendments must certify to the permitting or pretreatment control authority under penalty of law that the BMP Plan (or its amendments) has been prepared in accordance with good engineering practices and in accordance with this regulation. The mill is not required to obtain approval from the permitting or pretreatment control authority of the BMP Plan or any amendments thereto.

(g) *Record keeping requirements.* (1) Each mill subject to this section must maintain on its premises a complete copy of the current BMP Plan and the records specified in paragraph (g)(2) of this section and must make such BMP Plan and records available to the permitting or pretreatment control authority and the Regional Administrator or his or her designee for review upon request.

(2) The mill must maintain the following records for three years from the date they are created:

(i) Records tracking the repairs performed in accordance with the repair program described in paragraph (c)(2) of this section;

(ii) Records of initial and refresher training conducted in accordance with paragraph (c)(4) of this section;

(iii) Reports prepared in accordance with paragraph (c)(5) of this section; and

(iv) Records of monitoring required by paragraphs (c)(10) and (i) of this section.

(h) *Establishment of wastewater treatment system influent action levels.* (1) Each mill subject to this section must conduct a monitoring program, described in paragraph (h)(2) of this section, for the purpose of defining wastewater treatment system influent characteristics (or action levels), described in paragraph (h)(3) of this section, that will trigger requirements to initiate investigations on BMP effectiveness and to take corrective action.

(2) Each mill subject to this section must employ the following procedures in order to develop the action levels required by paragraph (h) of this section:

(i) *Monitoring parameters.* The mill must collect 24-hour composite samples and analyze the samples for a measure of organic content (e.g., Chemical Oxygen Demand (COD) or Total Organic Carbon (TOC)). Alternatively, the mill may use a measure related to spent pulping liquor losses measured continuously and averaged over 24 hours (e.g., specific conductivity or color).

(ii) *Monitoring locations.* For direct dischargers, monitoring must be conducted at the point influent enters the wastewater treatment system. For indirect dischargers monitoring must be conducted at the point of discharge to the POTW. For the purposes of this requirement, the mill may select alternate monitoring point(s) in order to isolate possible sources of spent pulping liquor, soap, or turpentine from other possible sources of organic wastewaters that are tributary to the wastewater treatment facilities (e.g., bleach plants, paper machines and secondary fiber operations).

(3) By the date prescribed in paragraph (j)(1)(iii) of this section, each existing discharger subject to this section must complete an initial six-month monitoring program using the procedures specified in paragraph (h)(2) of this section and must establish initial action levels based on the results of that program. A wastewater treatment influent action level is a statistically determined pollutant loading determined by a statistical analysis of six months of daily measurements. The action levels must consist of a lower action level, which if exceeded will trigger the investigation requirements described in paragraph (i) of this section, and an upper action level, which if exceeded will trigger the corrective action requirements described in paragraph (i) of this section.

(4) By the date prescribed in paragraph (j)(1)(vi) of this section, each existing discharger must complete a second six-month monitoring program using the procedures specified in paragraph (h)(2) of this section and must establish revised action levels based on the results of that program. The initial action levels shall remain in effect until replaced by revised action levels.

(5) By the date prescribed in paragraph (j)(2) of this section, each new source subject to this section must complete a six-month monitoring program using the procedures specified in paragraph (h)(2) of this section and must develop a lower action level and an upper action level based on the results of that program.

(6) Action levels developed under this paragraph must be revised using six months of monitoring data after any change in mill design, construction, operation, or maintenance that materially affects the potential for leaks or spills of spent pulping liquor, soap, or turpentine from the immediate process areas.

(i) *Monitoring, corrective action, and reporting requirements.* (1) Each mill subject to this section must conduct daily monitoring of the influent to the wastewater treatment system in accordance with the procedures described in paragraph (h)(2) of this section for the purpose of detecting leaks and spills, tracking the effectiveness of the BMPs, and detecting trends in spent pulping liquor losses.

(2) Whenever monitoring results exceed the lower action level for the period of time specified in the BMP Plan, the mill must conduct an investigation to determine the cause of such exceedance. Whenever monitoring results exceed the upper action level for the period of time specified in the BMP Plan, the mill must complete corrective action to bring the wastewater treatment system influent mass loading below the lower action level as soon as practicable.

(3) Although exceedances of the action levels will not constitute violations of an NPDES permit or pretreatment standard, failure to take the actions required by paragraph (i)(2) of this section as soon as practicable will be a permit or pretreatment standard violation.

(4) Each mill subject to this section must report to the NPDES permitting or pretreatment control authority the results of the daily monitoring conducted pursuant to paragraph (i)(1) of this section. Such reports must include a summary of the monitoring results, the number and dates of exceedances of the applicable action levels, and brief descriptions of any corrective actions taken to respond to such exceedances. Submission of such reports shall be at the frequency established by the NPDES permitting or pretreatment control authority, but in no case less than once per year.

(j) *Compliance deadlines.* (1) *Existing direct and indirect dischargers.* Except as provided in paragraph (j)(2) of this section for new sources, indirect discharging mills subject to this section must meet the deadlines set forth below. Except as provided in paragraph (j)(2) of this section for new sources, NPDES permits must require direct discharging mills subject to this section to meet the deadlines set forth below. If a deadline set forth below has passed at the time the NPDES permit containing the BMP requirement is issued, the NPDES permit must require immediate compliance with such BMP requirement(s).

(i) Prepare BMP Plans and certify to the permitting or pretreatment authority that the BMP Plan has been prepared in accordance with this regulation not later than April 15, 1999;

(ii) Implement all BMPs specified in paragraph (c) of this section that do not require the construction of containment or diversion structures or the installation of monitoring and alarm systems not later than April 15, 1999.

(iii) Establish initial action levels required by paragraph (h)(3) of this section not later than April 15, 1999.

(iv) Commence operation of any new or upgraded continuous, automatic monitoring systems that the mill determines to be necessary under paragraph (c)(3) of this section (other than those associated with construction of containment or diversion structures) not later than April 17, 2000.

(v) Complete construction and commence operation of any spent pulping liquor, collection, containment, diversion, or other facilities, including any associated continuous monitoring systems, necessary to fully implement BMPs specified in paragraph (c) of this section not later than April 16, 2001.

(vi) Establish revised action levels required by paragraph (h)(4) of this section as soon as possible after fully implementing the BMPs specified in paragraph (c) of this section, but not later than January 15, 2002.

(2) *New Sources.* Upon commencing discharge, new sources subject to this section must implement all of the BMPs specified in paragraph (c) of this section, prepare the BMP Plan required by paragraph (d) of this section, and certify to the permitting or pretreatment authority that the BMP Plan has been prepared in accordance with this regulation as required by paragraph (f) of this section, except that the action levels required by paragraph (h)(5) of this section must be established not later than 12 months after commencement of discharge, based on six months of monitoring data obtained prior to that date in accordance with the procedures specified in paragraph (h)(2) of this section.

Subpart A—Dissolving Kraft Subcategory

§ 430.10 Applicability; description of the dissolving kraft subcategory.

The provisions of this subpart apply to discharges resulting from the production of dissolving pulp at kraft mills.

§ 430.11 Specialized definitions.

For the purpose of this subpart, the general definitions, abbreviations, and methods of analysis set forth in 40 CFR part 401 and § 430.01 of this part shall apply to this subpart.

§ 430.12 Effluent limitations representing the degree of effluent reduction attainable by the application of the best practicable control technology currently available (BPT).

(a) Except as provided in 40 CFR 125.30 through 125.32, any existing point source subject to this subpart must achieve the following effluent limitations representing the degree of effluent reduction attainable by the application of the best practicable control technology currently available (BPT), except that non-continuous dischargers shall not be subject to the maximum day and average of 30 consecutive days limitations but shall be subject to annual average effluent limitations:

SUBPART A

[BPT effluent limitations]

Pollutant or pollutant property	Kg/kkg (or pounds per 1,000 lb) of product		
	Continuous dischargers		Non-continuous dischargers
	Maximum for any 1 day	Average of daily values for 30 consecutive days	
BOD5	23.6	12.25	6.88
TSS	37.3	20.05	11.02
pH	(1)	(1)	(1)

1 Within the range of 5.0 to 9.0 at all times.

(b) The following limitations establish the quantity or quality of pollutants or pollutant properties, controlled by this section, resulting from the use of wet barking operations, which may be discharged by a point source subject to the provisions of this subpart. These limitations are in addition to the limitations set forth in paragraph (a) of this section and shall be calculated using the proportion of the mill's total production due to use of logs which are subject to such operations. Non-continuous dischargers shall not be subject to the maximum day and average of 30 consecutive days limitations, but shall be subject to annual average effluent limitations:

SUBPART A

[BPT effluent limitations]

Pollutant or pollutant property	Kg/kkg (or pounds per 1,000 lb) of product		
	Continuous dischargers		Non-continuous dischargers (annual average)
	Maximum for any 1 day	Average of daily values for 30 consecutive days	
BOD5	3.2	1.7	0.95
TSS	6.9	3.75	2.0
pH	(1)	(1)	(1)

1 Within the range of 5.0 to 9.0 at all times.

(c) The following limitations establish the quantity or quality of pollutants or pollutant parameters, controlled by this section, resulting from the use of log washing or chip washing operations, which may be discharged by a point source subject to the provisions of this subpart. These limitations are in addition to the limitations set forth in paragraph (a) of this section and shall be calculated using the proportion of the mill's total production due to use of logs and/or chips which are subject to such operations. Non-continuous dischargers shall not be subject to the maximum day and average of 30 consecutive days limitations, but shall be subject to the annual average effluent limitations:

SUBPART A

[BPT effluent limitations]

Pollutant or pollutant property	Kg/kkg (or pounds per 1,000 lb) of product		
	Continuous dischargers		Non-continuous dischargers (annual average)
	Maximum for any 1 day	Average of daily values for 30 consecutive days	
BOD5	0.35	0.2	0.1
TSS	0.70	0.4	0.2
pH	(1)	(1)	(1)

1 Within the range of 5.0 to 9.0 at all times.

(d) The following limitations establish the quantity or quality of pollutants or pollutant properties, controlled by this section, resulting from the use of log flumes or log ponds, which may be discharged by a point source subject to the provisions of this subpart. These limitations are in addition to the limitations set forth in paragraph (a) of this section and shall be calculated using the proportion of the mill's total production due to use of logs which are subject to such operations. Non-continuous dischargers shall not be subject to the maximum day and average of 30 consecutive days limitations but shall be subject to the annual average effluent limitations:

SUBPART A

[BPT effluent limitations]

Pollutant or pollutant property	Kg/kkg (or pounds per 1,000 lb) of product		
	Continuous dischargers		Non-continuous dischargers (annual average)
	Maximum for any 1 day	Average of daily values for 30 consecutive days	
BOD5	0.6	0.35	0.2
TSS	1.45	0.8	0.4
pH	(1)	(1)	(1)

1 Within the range of 5.0 to 9.0 at all times.

§ 430.13 Effluent limitations guidelines representing the degree of effluent reduction attainable by the application of the best conventional pollutant control technology (BCT).

Except as provided in 40 CFR 125.30 through 125.32, any existing point source subject to this subpart shall achieve the following effluent limitations representing the degree of effluent reduction attainable by the application of the best conventional pollutant control technology (BCT): The limitations shall be the same as those specified for conventional pollutants (which are defined in 40 CFR 401.16) in § 430.12 of this subpart for the best practicable control technology currently available (BPT).

§ 430.14 Effluent limitations representing the degree of effluent reduction attainable by the application of the best available technology economically achievable (BAT).

Except as provided in 40 CFR 125.30 through 125.32, any existing point source subject to this subpart where chlorophenolic-containing biocides are used must achieve the following effluent limitations representing the degree of effluent reduction attainable by the application of the best available technology economically achievable (BAT). Non-continuous dischargers shall not be subject to the maximum day mass limitations in kg/kkg (lb/1000 lb) but shall be subject to concentration limitations. Concentration limitations are only applicable to non-continuous dischargers. Permittees not using chlorophenolic-containing biocides must certify to the permit-issuing authority that they are not using these biocides:

SUBPART A

[BAT effluent limitations]

Pollutant or pollutant property	Maximum for any 1 day	
	Kg/kkg (or pounds per 1,000 lb) of product	Milligrams/liter
Pentachlorophenol	0.0025	(0.011)(55.1)/y
Trichlorophenol	0.016	(0.068)(55.1)/y
y = wastewater discharged in kgal per ton of product.		

§ 430.15 New source performance standards (NSPS).

Any new source subject to this subpart must achieve the following new source performance standards (NSPS), except that non-continuous dischargers shall not be subject to the maximum day and average of 30 consecutive days effluent limitations for BOD5 and TSS, but shall be subject to annual average effluent limitations. Also, for non-continuous dischargers, concentration limitations (mg/l) shall apply, where provided. Concentration limitations will only apply to non-continuous dischargers. Only facilities where chlorophenolic-containing biocides are used shall be subject to pentachlorophenol and trichlorophenol limitations. Permittees not using chlorophenolic-containing biocides must certify to the permit-issuing authority that they are not using these biocides:

SUBPART A

[NSPS]

Pollutant or pollutant property	Kg/kkg (or pounds per 1,000 lb) of product		
	Continuous dischargers		Non-continuous dischargers (annual average)
	Maximum for any 1 day	Average of daily values for 30 consecutive days	
BOD5	15.6	8.4	4.4
TSS	27.3	14.3	7.5
pH	(1)	(1)	(1)

	Maximum for any 1 day	
	Kg/kkg (or pounds per 1,000 lb) of product	Milligrams/liter
Pentachlorophenol	0.0025	(0.012)(50.7)/y
Trichlorophenol	0.016	(0.074)(50.7)/y
y = wastewater discharged in kgal per ton at all times.		

[1] Within the range of 5.0 to 9.0 at all times.

§ 430.16 Pretreatment standards for existing sources (PSES).

Except as provided in 40 CFR 403.7 and 403.13, any existing source subject to this subpart that introduces pollutants into a publicly owned treatment works must: comply with 40 CFR part 403; and achieve the following pretreatment standards for existing sources (PSES) if it uses chlorophenolic-containing biocides. Permittees not using chlorophenolic-containing biocides must certify to the permit-issuing authority that they are not using these biocides. PSES must be attained on or before July 1, 1984:

SUBPART A
[PSES]

Pollutant or pollutant property	Maximum for any 1 day	
	Milligrams/liter (mg/l)	Kg/kkg (or pounds per 1,000 lb) of product[a]
Pentachlorophenol	(0.011)(55.1)/y	0.0025
Trichlorophenol	(0.082)(55.1)/y	0.019
y = wastewater discharged in kgal per ton of product.		

[a] The following equivalent mass limitations are provided as guidance in cases when POTWs find it necessary to impose mass effluent limitations.

§ 430.17 Pretreatment standards for new sources (PSNS).

Except as provided in 40 CFR 403.7, any new source subject to this subpart that introduces pollutants into a publicly owned treatment works must: comply with 40 CFR part 403; and achieve the following pretreatment standards for new sources (PSNS) if it uses chlorophenolic-containing biocides. Permittees not using chlorophenolic-containing biocides must certify to the permit-issuing authority that they are not using these biocides:

SUBPART A
[PSNS]

Pollutant or pollutant property	Maximum for any 1 day	
	Milligrams/liter (mg/l)	Kg/kkg (or pounds per 1,000 lb) of product[a]
Pentachlorophenol	(0.012)(50.7)/y	0.0025
Trichlorophenol	(0.089)(50.7)/y	0.019
y = wastewater discharged in kgal per ton of product.		

[a] The following equivalent mass limitations are provided as guidance in cases when POTWs find it necessary to impose mass effluent limitations.

Subpart B—Bleached Papergrade Kraft and Soda Subcategory

§ 430.20 Applicability; description of the bleached papergrade kraft and soda subcategory.

The provisions of this subpart apply to discharges resulting from: the production of market pulp at bleached kraft mills; the integrated production of paperboard, coarse paper, and tissue paper at bleached kraft mills; the integrated production of pulp and fine papers at bleached kraft mills; and the integrated production of pulp and paper at soda mills.

§ 430.21 Specialized definitions.

(a) The general definitions, abbreviations, and methods of analysis set forth in 40 CFR part 401 and § 430.01 of this part apply to this subpart.

(b) *Baseline BAT limitations or NSPS* means the BAT limitations specified in § 430.24(a) (1) or (2), as applicable, and the NSPS specified in § 430.25(b) (1) or (2), as applicable, that apply to any direct discharger that is not "enrolled" in the "Voluntary Advanced Technology Incentives Program."

(c) *Enroll* means to notify the permitting authority that a mill intends to participate in the "Voluntary Advanced Technology Incentives Program." A mill can enroll by indicating its intention to participate in the program either as part of its application for a National Pollutant Discharge Elimination System (NPDES) permit, or through separate correspondence to the permitting authority as long as the mill signs the correspondence in accordance with 40 CFR 122.22.

(d) *Existing effluent quality* means the level at which the pollutants identified in § 430.24(a)(1) are present in the effluent of a mill "enrolled" in the "Voluntary Advanced Technology Incentives Program."

(e) *Kappa number* is a measure of the lignin content in unbleached pulp, determined after pulping and prior to bleaching.

(f) *Voluntary Advanced Technology Incentives Program* is the program established under § 430.24(b) (for existing direct dischargers) and § 430.25(c) (for new direct dischargers) whereby participating mills agree to accept enforceable effluent limitations and conditions in their NPDES permits that are more stringent than the "baseline BAT limitations or NSPS" that would otherwise apply, in exchange for regulatory- and enforcement-related rewards and incentives.

§ 430.22 Effluent limitations representing the degree of effluent reduction attainable by the application of the best practicable control technology currently available (BPT).

(a) Except as provided in 40 CFR 125.30 through 125.32, any existing point source subject to this subpart must achieve the following effluent limitations representing the degree of effluent reduction attainable by the application of the best practicable control technology currently available (BPT):

SUBPART B

[BPT effluent limitations for bleached kraft facilities where market pulp is produced]

Pollutant or pollutant parameter	Kg/kkg (or pounds per 1,000 lb) of product		
	Continuous dischargers		Non-continuous dischargers (annual average)
	Maximum for any 1 day	Average of daily values for 30 consecutive days	
BOD5	15.45	8.05	4.52
TSS	30.4	16.4	9.01
pH	(1)	(1)	(1)

1 Within the range of 5.0 to 9.0 at all times.

SUBPART B

[BPT effluent limitations for bleached kraft facilities where paperboard, coarse paper, and tissue paper are produced]

Pollutant or pollutant parameter	Kg/kkg (or pounds per 1,000 lb) of product		
	Continuous dischargers		Non-continuous dischargers (annual average)
	Maximum for any 1 day	Average of daily values for 30 consecutive days	
BOD5	13.65	7.1	3.99
TSS	24.0	12.9	7.09
pH	(1)	(1)	(1)

1 Within the range of 5.0 to 9.0 at all times.

SUBPART B

[BPT effluent limitations for bleached kraft facilities where pulp and fine papers are produced]

Pollutant or pollutant parameter	Kg/kkg (or pounds per 1,000 lb) of product		
	Continuous dischargers		Non-continuous dischargers (annual average)
	Maximum for any 1 day	Average of daily values for 30 consecutive days	
BOD5	10.6	5.5	3.09
TSS	22.15	11.9	6.54
pH	(1)	(1)	(1)

1 Within the range of 5.0 to 9.0 at all times.

SUBPART B

[BPT effluent limitations for soda facilities where pulp and paper are produced]

Pollutant or pollutant parameter	Kg/kkg (or pounds per 1,000 lb) of product		
	Continuous dischargers		Non-continuous dischargers (annual average)
	Maximum for any 1 day	Average of daily values for 30 consecutive days	
BOD5	13.7	7.1	3.99
TSS	24.5	13.2	7.25
pH	(1)	(1)	(1)

1 Within the range of 5.0 to 9.0 at all times.

(b) The following limitations establish the quantity or quality of pollutants or pollutant properties, controlled by this section, resulting from the use of wet barking operations, which may be discharged by a point source subject to the provisions of this subpart. These limitations are in addition to the limitations set forth in paragraph (a) of this section and shall be calculated using the proportion of the mill's total production due to use of logs which are subject to such operations:

SUBPART B

[BPT effluent limitations for bleached kraft facilities where market pulp is produced]

Pollutant or pollutant parameter	Kg/kkg (or pounds per 1,000 lb) of product		
	Continuous dischargers		Non-continuous dischargers (annual average)
	Maximum for any 1 day	Average of daily values for 30 consecutive days	
BOD5	2.3	1.2	0.70
TSS	5.3	2.85	1.55
pH	(1)	(1)	(1)

1 Within the range of 5.0 to 9.0 at all times.

SUBPART B

[BPT effluent limitations for bleached kraft facilities where paperboard, coarse paper, and tissue paper are produced]

Pollutant or pollutant parameter	Kg/kkg (or pounds per 1,000 lb) of product		
	Continuous dischargers		Non-continuous dischargers (annual average)
	Maximum for any 1 day	Average of daily values for 30 consecutive days	
BOD5	2.25	1.2	0.65
TSS	5.75	3.1	1.70
pH	(1)	(1)	(1)

11 Within the range of 5.0 to 9.0 at all times.

SUBPART B

[BPT effluent limitations for bleached kraft facilities where pulp and fine papers are produced]

Pollutant or pollutant parameter	Kg/kkg (or pounds per 1,000 lb) of product		
	Continuous dischargers		Non-continuous dischargers (annual average)
	Maximum for any 1 day	Average of daily values for 30 consecutive days	
BOD5	1.95	1.0	0.55
TSS	5.3	2.85	1.55
pH	(1)	(1)	(1)

1 Within the range of 5.0 to 9.0 at all times.

SUBPART B

[BPT effluent limitations for soda facilities where pulp and papers are produced]

Pollutant or pollutant parameter	Kg/kkg (or pounds per 1,000 lb) of product		
	Continuous dischargers		Non-continuous dischargers (annual average)
	Maximum for any 1 day	Average of daily values for 30 consecutive days	
BOD5	2.05	1.1	0.60

SUBPART B—Continued

[BPT effluent limitations for soda facilities where pulp and papers are produced]

Pollutant or pollutant parameter	Kg/kkg (or pounds per 1,000 lb) of product		
	Continuous dischargers		Non-continuous dischargers (annual average)
	Maximum for any 1 day	Average of daily values for 30 consecutive days	
TSS	5.25	2.8	1.55
pH	(1)	(1)	(1)

1 Within the range of 5.0 to 9.0 at all times.

(c) The following limitations establish the quantity or quality of pollutants or pollutant parameters, controlled by this section, resulting from the use of log washing or chip washing operations, which may be discharged by a point source subject to the provisions of this subpart. These limitations are in addition to the limitations set forth in paragraph (a) of this section and shall be calculated using the proportion of the mill's total production due to use of logs and/or chips which are subject to such operations:

SUBPART B

[BPT effluent limitations for bleached kraft facilities where market pulp is produced]

Pollutant or pollutant parameter	Kg/kkg (or pounds per 1,000 lb) of product		
	Continuous dischargers		Non-continuous dischargers (annual average)
	Maximum for any 1 day	Average of daily values for 30 consecutive days	
BOD5	0.2	0.1	0.1
TSS	0.6	0.3	0.15
pH	(1)	(1)	(1)

1 Within the range of 5.0 to 9.0 at all times..

SUBPART B

[BPT effluent limitations for bleached kraft facilities where paperboard, coarse paper, and tissue paper are produced]

Pollutant or pollutant parameter	Kg/kkg (or pounds per 1,000 lb) of product		
	Continuous dischargers		Non-continuous dischargers (annual average)
	Maximum for any 1 day	Average of daily values for 30 consecutive days	
BOD5	0.25	0.15	0.05
TSS	0.65	0.35	0.20
pH	(1)	(1)	(1)

1 Within the range of 5.0 to 9.0 at all times.

Subpart B

[BPT effluent limitations for bleached kraft facilities where pulp and fine papers are produced]

Pollutant or pollutant parameter	Kg/kkg (or pounds per 1,000 lb) of product		
	Continuous dischargers		Non-continuous dischargers (annual average)
	Maximum for any 1 day	Average of daily values for 30 consecutive days	
BOD5	0.2	0.1	0.05
TSS	0.55	0.3	0.15

Subpart B—Continued

[BPT effluent limitations for bleached kraft facilities where pulp and fine papers are produced]

Pollutant or pollutant parameter	Kg/kkg (or pounds per 1,000 lb) of product		
	Continuous dischargers		Non-continuous dischargers (annual average)
	Maximum for any 1 day	Average of daily values for 30 consecutive days	
pH	(1)	(1)	(1)

1 Within the range of 5.0 to 9.0 at all times.

SUBPART B

[BPT effluent limitations for soda facilities where pulp and papers are produced]

Pollutant or pollutant parameter	Kg/kkg (or pounds per 1,000 lb) of product		
	Continuous dischargers		Non-continuous dischargers (annual average)
	Maximum for any 1 day	Average of daily values for 30 consecutive days	
BOD5	0.15	0.1	0.05
TSS	0.5	0.25	0.15
pH	(1)	(1)	(1)

1 Within the range of 5.0 to 9.0 at all times.

(d) The following limitations establish the quantity or quality of pollutants or pollutant properties, controlled by this section, resulting from the use of log flumes or log ponds, which may be discharged by a point source subject to the provisions of this subpart. These limitations are in addition to the limitations set forth in paragraph (a) of this section and shall be calculated using the proportion of the mill's total production due to use of logs which are subject to such operations:

SUBPART B

[BPT effluent limitations for bleached kraft facilities where market pulp is produced]

Pollutant or pollutant parameter	Kg/kkg (or pounds per 1,000 lb) of product		
	Continuous dischargers		Non-continuous dischargers (annual average)
	Maximum for any 1 day	Average of daily values for 30 consecutive days	
BOD5	0.4	0.2	0.15
TSS	1.15	0.6	0.35
pH	(1)	(1)	(1)

1 Within the range of 5.0 to 9.0 at all times.

SUBPART B

[BPT effluent limitations for bleached kraft facilities where paperboard, coarse paper, and tissue paper are produced]

Pollutant or pollutant parameter	Kg/kkg (or pounds per 1,000 lb) of product		
	Continuous dischargers		Non-continuous dischargers (annual average)
	Maximum for any 1 day	Average of daily values for 30 consecutive days	
BOD5	0.45	0.25	0.10
TSS	1.25	0.7	0.35

SUBPART B—Continued

[BPT effluent limitations for bleached kraft facilities where paperboard, coarse paper, and tissue paper are produced]

Pollutant or pollutant parameter	Kg/kkg (or pounds per 1,000 lb) of product		
	Continuous dischargers		Non-continuous dischargers (annual average)
	Maximum for any 1 day	Average of daily values for 30 consecutive days	
pH	(1)	(1)	(1)

1 Within the range of 5.0 to 9.0 at all times.

SUBPART B

[BPT effluent limitations for bleached kraft facilities where pulp and fine papers are produced]

Pollutant or pollutant parameter	Kg/kkg (or pounds per 1,000 lb) of product		
	Continuous dischargers		Non-continuous dischargers (annual average)
	Maximum for any 1 day	Average of daily values for 30 consecutive days	
BOD5	0.35	0.2	0.10
TSS	1.15	0.6	0.30
pH	(1)	(1)	(1)

1 Within the range of 5.0 to 9.0 at all times.

SUBPART B

[BPT effluent limitations for soda facilities where pulp and papers are produced]

Pollutant or pollutant parameter	Kg/kkg (or pounds per 1,000 lb) of product		
	Continuous dischargers		Non-continuous dischargers (annual average)
	Maximum for any 1 day	Average of daily values for 30 consecutive days	
BOD5	0.3	0.2	0.10
TSS	1.1	0.55	0.35
pH	(1)	(1)	(1)

1 Within the range of 5.0 to 9.0 at all times.

§ 430.23 Effluent limitations representing the degree of effluent reduction attainable by the application of the best conventional pollutant control technology (BCT).

Except as provided in 40 CFR 125.30 through 125.32, any existing point source subject to this subpart must achieve the following effluent limitations representing the degree of effluent reduction attainable by the application of the best conventional pollutant control technology (BCT). The limitations shall be the same as those specified in § 430.22 of this subpart for the best practicable control technology currently available (BPT).

§ 430.24 Effluent limitations representing the degree of effluent reduction attainable by the application of best available technology economically achievable (BAT).

Except as provided in 40 CFR 125.30 through 125.32, any existing point source subject to this subpart must achieve the following effluent limitations representing the degree of effluent reduction attainable by the application of the best available technology economically achievable (BAT).

(a) Except as provided in paragraph (b) of this section—

(1) The following effluent limitations apply with respect to each fiber line that does not use an exclusively TCF bleaching process, as disclosed by the discharger in its NPDES permit application under 40 CFR 122.21(g)(3) and certified under 40 CFR 122.22:

SUBPART B

Pollutant or pollutant property	BAT effluent limitations	
	Maximum for any 1 day	Monthly average
TCDD	<ML [a]	([b])
TCDF	31.9 [c]	([b])
Chloroform	6.92 [d]	4.14 ([d])
Trichlorosyringol	<ML [a]	([b])
3,4,5-trichlorocatechol	<ML [a]	([b])
3,4,6-trichlorocatechol	<ML [a]	([b])
3,4,5-trichloroguaiacol	<ML [a]	([b])
3,4,6-trichloroguaiacol	<ML [a]	([b])
4,5,6-trichloroguaiacol	<ML [a]	([b])
2,4,5-trichlorophenol	<ML [a]	([b])
2,4,6-trichlorophenol	<ML [a]	([b])
Tetrachlorocatechol	<ML [a]	([b])
Tetrachloroguaiacol	<ML [a]	([b])
2,3,4,6-tetrachlorophenol	<ML [a]	([b])
Pentachlorophenol	<ML [a]	([b])

	Continuous dischargers		Non-continuous dischargers
	Maximum for any 1 day (kg/kkg)	Monthly average (kg/kkg)	Annual average (kg/kkg)
AOX	0.951	0.623	0.512
COD	([e])	([e])	([e])

[a] "<ML" means less than the minimum level specified in § 430.01(i) for the particular pollutant.
[b] This regulation does not specify this type of limitation for this pollutant; however, permitting authorities may do so as appropriate.
[c] Picograms per liter.
[d] Grams per 1,000 kilograms (g/kkg).
[e] [Reserved].

(2) The following effluent limitations apply with respect to each fiber line that uses exclusively TCF bleaching processes, as disclosed by the discharger in its NPDES permit application under 40 CFR 122.21(g)(3) and certified under 40 CFR 122.22:

SUBPART B

Pollutant or pollutant property	BAT effluent limitations (TCF)			
	Continuous dischargers		Non-continuous dischargers	
	Maximum for any 1 day	Monthly average	Maximum for any 1 day	Annual average
	kg/kkg(or pounds per 1,000 lb) of product			
AOX	<ML [a]	([b])	<ML [a]	([b])
COD	([c])	([c])	([c])	([c])

[a] "<ML" means less than the minimum level specified in § 430.01(i) for the particular pollutant.
[b] This regulation does not specify this type of limitation for this pollutant; however, permitting authorities may do so as appropriate.
[c] [Reserved].

(b) The following limitations apply with respect to each fiber line enrolled in the Voluntary Advanced Technology Incentives Program:

(1) Stage 1 Limitations: Numeric limitations that are equivalent to the discharger's existing effluent quality or the discharger's current effluent limitations established under CWA section 301(b)(2), whichever are more stringent, for the pollutants identified in paragraph (a)(1) of this section (with the exception of COD). For AOX, the permitting authority must determine existing effluent quality for each fiber line enrolled in the Voluntary Advanced Technology Incentives Program at the end of the pipe based on loadings attributable to that fiber line. For the remaining pollutants, with the exception of COD, the permitting authority must determine existing effluent quality for each fiber line enrolled in the Voluntary Advanced Technology Incentives Program at the point where the wastewater containing those pollutants leaves the bleach plant. These limitations must be recalculated each time the NPDES permit of a discharger enrolled in the Voluntary Advanced Technology Incentives Program is reissued, up to:

(i) April 15, 2004 for all pollutants in paragraph (a)(1) of this section except AOX; and

(ii) The date specified in paragraph (b)(4)(ii) of this section for achieving the applicable AOX limitation specified in paragraph (b)(4)(i).

(2) Best Professional Judgment Milestones: Narrative or numeric limitations and/or special permit conditions, as appropriate, established by the permitting authority on the basis of his or her best professional judgment that reflect reasonable interim milestones toward achievement of the effluent limitations specified in paragraphs (b)(3) and (b)(4) of this section, as applicable.

(3) Six-year Milestones: By April 15, 2004 all dischargers enrolled in the Voluntary Advanced Technology Incentives Program must achieve the following:

(i) The effluent limitations specified in paragraph (a)(1) of this section, except that, with respect to AOX, dischargers subject to Tier I effluent limitations specified in paragraph (b)(4)(i) of this section must achieve the AOX limitation specified in that paragraph; or

(ii) For dischargers that use exclusively TCF bleaching processes as of April 15, 2004, the effluent limitations specified in paragraph (a)(2) of this section.

(4)(i) Stage 2 Limitations:

ULTIMATE VOLUNTARY ADVANCED TECHNOLOGY INCENTIVES PROGRAM BAT LIMITATIONS

Tier	Kappa number (annual average)	Filtrate recycling	Total pulping area condensate, evaporator condensate, and bleach plant wastewater flow (annual average)	AOX (kg/kkg)			
				Non-TCF [a]		TCF	
				Maximum for any 1 day	Annual average	Maximum for any 1 day	Annual average
Tier I	20 (softwood furnish) 13 (Hardwood furnish)	([b])	N/A	0.58	0.26	<ML [c]	([d])
Tier II	NA	([b])	10 cubic meters/kkg	0.23	0.10	<ML [c]	([d])
Tier III	N/A	([b])	5 cubic meters/kkg	0.11	0.5	<ML [c]	([d])

[a] Non-TCF: Pertains to any fiber line that does not use exclusively TCF bleaching processes.
[b] Complete recycling to the chemical recovery system of all filtrates generated prior to bleaching. Under Tier I, this includes all filtrates up to the point where kappa number is measures.
[c] "<ML" means less than the minimum level specified in § 430.01(i) for the particular pollutant.
[d] This regulation does not specify this type of limitation for this pollutant; however, permitting authorities may do so as appropriate.
AN/A means "not applicable."

(ii) Deadlines. (A) A discharger enrolled in Tier I of the Voluntary Advanced Technology Incentives Program must achieve for Tier I limitations in paragraph (b)(4)(i) of this section by April 15, 2004.

(B) A discharger enrolled in Tier II of the Voluntary Advanced Technology Incentives Program must achieve the Tier II limitations in paragraph (b)(4)(i) of this section by April 15, 2009.

(C) A discharger enrolled in Tier III of the Voluntary Advanced Technology Incentives Program must achieve the Tier III limitations in paragraph (b)(4)(i) of this section by April 15, 2014.

(c) [RESERVED].

(d) The following additional effluent limitations apply to all dischargers subject to this section in accordance with the previous subcategorization scheme unless the discharger certifies to the permitting authority that it is not using these compounds as biocides. Also, for non-continuous dischargers, concentration limitation (mg/l) shall apply. Concentration limitations will only apply to non-continuous dischargers:

SUBPART B

[Supplemental BAT effluent limitations for bleached kraft facilities where market pulp is produced]

Pullutant or pollutant property	Maximum for any 1 day	
	kg/kkg (or pounds per 1,000 lb) of product	Milligrams/liter
Pentachlorophenol	0.0019	(0.011)(41.6)/y
Trichlorophenol	0.012	(0.068)(41.6)/y
y = wastewater discharged in kgal per ton product.		

SUBPART B

[Supplemental BAT effluent limitations for bleached kraft facilities where paperboard, coarse paper, and tissue paper are produced]

Pollutant or pollutant property	Maximun for any 1 day	
	kg/kkg (or pounds per 1,000 lb) of product	Milligrams/liter
Pentachlorophenol	0.0016	(0.11)(35.4)/y
Trichlorophenol	0.010	(0.068)(35.4)/y
y = wastewater discharged in kgal per ton of product.		

SUBPART B

[Supplemental BAT effluent limitations for bleached kraft facilities where pulp and fine papers are produced and soda facilities where pulp and paper are produced]

Pollutant or pollutant property	Maximum for any 1 day	
	kg/kkg (or pounds per 1,000 lb) of product	Milligrams/liter
Pentachlorophenol	0.0014	(0.011) (30.9)/y
Trichlorophenol	0.0088	(0.068) (30.9)/y
y = wastewater discharged in kgal per ton of product.		

(e) Pursuant to 40 CFR 122.44(i) and 122.45(h), a discharger must demonstrate compliance with the effluent limitations in paragraph (a)(1) or (b)(3) of this section, as applicable, by monitoring for all pollutants (except for AOX and COD) at the point where the wastewater containing those pollutants leaves the bleach plant. The permitting authority may impose effluent limitations and/or monitoring requirements on internal wastestreams for any other pollutants covered in this section as appropriate under 40 CFR 122.44(i) and 122.45(h). In addition, a discharger subject to a limitation on total pulping area condensate, evaporator condensate, and bleach plant wastewater flow under paragraph (b)(4)(i) of this section, for Tier II and Tier III, must demonstrate compliance with that limitation by establishing and maintaining flow measurement equipment to monitor these flows at the point or points where they leave the pulping area, evaporator area, and bleach plant.

§ 430.25 New source performance standards (NSPS).

New sources subject to this subpart must achieve the following new source performance standards (NSPS), as applicable.

(a) The following standards apply to each new source that commenced discharge after June 15, 1988 and before June 15, 1998, provided that the new source was constructed to meet these standards:

SUBPART B

[1982 New Source Performance Standards for bleached kraft facilities where market pulp is produced]

Pollutant or pollutant property	Continuous dischargers		Non-continuous dischargers
	Maximum for any 1 day	Average of daily values for 30 consecutive days	Annual average
	kg/kkg (or pounds per 1,000 lb) of product		
BOD5	10.3	5.5	2.88
TSS	18.2	9.5	5.00
pH	(1)	(1)	(1)

1 Within the range of 5.0 to 9.0 at all times.

SUBPART B

[1982 New Source Performance Standards for bleached kraft facilities where paperboard, coarse paper, and tissue paper are produced]

Pollutant or pollutant property	Continuous dischargers		Non-continuous dischargers
	Maximum for any 1 day	Average of daily values for 30 consecutive days	Annual average
	kg/kkg (or pounds per 1,000 lb) of product		
BOD5	8.5	4.6	2.41
TSS	14.6	7.6	4.00
pH	(1)	(1)	(1)

1 Within the range of 5.0 to 9.0 at all times.

SUBPART B

[1982 New Source Performance Standards for bleached kraft facilities where pulp and fine papers are produced and soda facilities where pulp and paper are produced]

Pollutant or pollutant property	Continuous dischargers		Non-continuous dischargers
	Maximum for any 1 day	Average of daily values for 30 consecutive days	Annual average
	kg/kkg (or pounds per 1,000 lb) of product		
BOD5	5.7	3.1	1.62
TSS	9.1	4.8	2.53
pH	(1)	(1)	(1)

1 Within the range of 5.0 to 9.0 at all times.

(b) Except as provided in paragraph (c) of this section—

(1) The following standards apply with respect to each new source fiber line that does not use an exclusively TCF bleaching process, as disclosed by the discharger in its NPDES permit application under 40 CFR 122.21(g)(3) and certified under 40 CFR 122.22, and that commences discharge after June 15, 1998:

SUBPART B

Pollutant or pollutant property	NSPS	
	Maximum for any 1 day	Monthly average
TCDD	<ML [a]	([b])
TCDF	31.9 [c]	([b])
Chloroform	6.92 [d]	4.14 [d]
Trichlorosyringol	<ML [a]	([b])
3,4,5-trichlorocatechol	<ML [a]	([b])
3,4,6-trichlorocatechol	<ML [a]	([b])
3,4,5-trichloroguaiacol	<ML [a]	([b])
3,4,6-trichloroguaiacol	<ML [a]	([b])
4,5,6-trichloroguaiacol	<ML [a]	([b])
2,4,5-trichlorophenol	<ML [a]	([b])
2,4,6-trichlorophenol	<ML [a]	([b])
Tetrachlorocatechol	<ML [a]	([b])
Tetrachloroguaiacol	<ML [a]	([b])
2,3,4,6-tetrachlorophenol	<ML [a]	([b])
Pentachlorophenol	<ML [a]	([b])

	Continuous dischargers		Non-continuous dischargers
	Maximum for any 1 day (kg/kkg)	Monthly average (kg/kkg)	Annual average (kg/kkg)
AOX	0.476	0.272	0.208
BOD5	4.52	2.41	1.73
TSS	8.47	3.86	2.72
pH	(1)	(1)	(1)
COD	([e])	([e])	([e])

a "<ML" means less than the minimum level specified in § 430.01(i) for the particular pollutant.
b This regulation does not specify this type of limitation for this pollutant; however, permitting authorities may do so as appropriate.
c Picograms per liter.
d Grams per 1,000 kilograms(g/kkg).
e [Reserved].
1 Within the range of 5.0 to 9.0 at all times.

(2) The following standards apply with respect to each new source fiber line that uses exclusively TCF bleaching processes, as disclosed by the discharger in its NPDES permit application under 40 CFR 122.21(g)(3) and certified under 40 CFR 122.22, and that commences discharge after June 15, 1998:

SUBPART B

Pollutant or pollutant property	NSPS (TCF)			
	Continuous dischargers		Non-continuous dischargers	
	Maximum for any 1 day	Monthly average	Maximum for any 1 day	Annual average
AOX [d]	<ML [a]	([b])	<ML [a]	([b])
BOD5 [d]	4.52	2.41	N/A	1.73
TSS [d]	8.47	3.86	N/A	2.72
pH	([1])	([1])	([1])	([1])
COD	([c])	([c])	([c])	([c])

[a] "<ML" means less than the minimum level specified in § 430.01(i) for the particular pollutant.
[b] This regulation does not specify this type of limitation for this pollutant; however, permitting authorities may do so as appropriate.
[c] [Reserved].
[d] Kilograms per 1,000 kilograms (kg/kkg).
[1] Within the range of 5.0 to 9.0 at all times.

(c) With respect to each new source fiber line that is enrolled in the Voluntary Advanced Technology Incentives Program, dischargers subject to this section must achieve:

(1) The standards specified in paragraph (b)(1) of this section (except for AOX) or paragraph (b)(2) of this section, as applicable; and

(2) Standards for filtrates, flow, and AOX:

ULTIMATE VOLUNTARY ADVANCED TECHNOLOGY INCENTIVES PROGRAM NSPS

Tier	Filtrate recycling	Total pulping area condensate, evaporator condensate, and bleach plant wastewater flow (annual average)	AOX (kg/kkg)			
			Non-TCF [a]		TCF	
			Maximum for any 1 day	Annual average	Maximum for any 1 day	Annual average
Tier II	([b])	10 cubic meters/kkg	0.23	0.10	<ML [c]	([d])
Tier III	([b])	5 cubic meters/kkg	0.11	0.05	<ML [c]	([d])

[a] Non-TCF: Pertains to any fiber line that does not use exclusively TCF bleaching processes.
[b] Complete recycling to the chemical recovery system of all filtrates generated prior to bleaching.
[c] "<ML" means less than the minimum level specified in § 430.01(i) for the particular pollutant.
[d] This regulation does not specify this type of limitation for this pollutant; however, permitting authorities may do so as appropriate.

(d) These additional standards apply to all new sources, regardless of when they commenced discharge, in accordance with the previous subcategorization scheme unless the discharger certifies to the permitting authority that it is not using these compounds as biocides. Also, for non-continuous dischargers, concentration limitations (mg/l) shall apply. Concentration limitations will only apply to non-continuous dischargers:

SUBPART B

[Supplemental NSPS for bleached kraft facilities where market pulp is produced]

Pollutant or pollutant property	Maximum for any 1 day	
	kg/kkg (or pounds per 1,000 lb) of product	Milligrams/liter
Pentachlorophenol	0.0019	(0.013)(36.6)/y
Trichlorophenol	0.012	(0.077)(36.6)/y
y = wastewater discharged in kgal per ton of product.		

SUBPART B

[Supplemental NSPS for bleached kraft facilities where paperboard, coarse paper, and tissue paper are produced]

Pollutant or pollutant property	Maximum for any 1 day	
	kg/kkg (or pounds per 1,000 lb) of product	Milligrams/liter
Pentachlorophenol	0.0016	(0.012)(31.7)/y

SUBPART B—Continued

[Supplemental NSPS for bleached kraft facilities where paperboard, coarse paper, and tissue paper are produced]

Pollutant or pollutant property	Maximum for any 1 day	
	kg/kkg (or pounds per 1,000 lb) of product	Milligrams/liter
Trichlorophenol	0.010	(0.076)(31.7)/y
y = wastewater discharged in kgal per ton of product.		

SUBPART B

[Supplemental NSPS for bleached kraft facilities where pulp and fine papers are produced and soda facilities where pulp and paper are produced]

Pollutant or pollutant property	Maximum for any 1 day	
	kg/kkg (or pounds per 1,000 lb) of product	Milligrams/liter
Pentachlorophenol	0.0014	(0.014)(25.1)/y
Trichlorophenol	0.0088	(0.084)(25.1)/y
y = wastewater discharged in kgal per ton of product.		

(e) Pursuant to 40 CFR 122.44(i) and 122.45(h), a discharger must demonstrate compliance with the limitations in paragraph (b)(1) or (c)(1) of this section, as applicable, by monitoring for all pollutants (except for AOX, COD, BOD5, TSS, and pH) at the point where the wastewater containing those pollutants leaves the bleach plant. The permitting authority may impose effluent limitations and/or monitoring requirements on internal wastestreams for any other pollutants covered in this section as appropriate under 40 CFR 122.44(i) and 122.45(h). In addition, a discharger subject to a limitation on total pulping area condensate, evaporator condensate, and bleach plant wastewater flow under paragraph (c)(2) of this section must demonstrate compliance with that limitation by establishing and maintaining flow measurement equipment monitoring these flows at the point or points where they leave the pulping area, evaporator area, and the bleach plant.

§ 430.26 Pretreatment standards for existing sources (PSES).

Except as provided in 40 CFR 403.7 and 403.13, any existing source subject to this subpart that introduces pollutants into a publicly owned treatment works must: comply with 40 CFR part 403; and achieve the following pretreatment standards for existing sources (PSES).

(a)(1) The following pretreatment standards apply with respect to each fiber line operated by an indirect discharger subject to this section, unless the indirect discharger discloses to the pretreatment control authority in a report submitted under 40 CFR 403.12(b) that it uses exclusively TCF bleaching processes at that fiber line. These pretreatment standards must be attained on or before April 16, 2001:

SUBPART B

Pollutant or pollutant property	PSES	
	Maximum for any 1 day	Monthly average
TCDD	<ML [a]	([b])
TCDF	31.9 [c]	([b])
Chloroform	6.92 [d]	[d] 4.14
Trichlorosyringol	<ML [a]	([b])
3,4,5-trichlorocatechol	<ML [a]	([b])
3,4,6-trichlorocatechol	<ML [a]	([b])
3,4,5-trichloroguaiacol	<ML [a]	([b])
3,4,6-trichloroguaiacol	<ML [a]	([b])
4,5,6-trichloroguaiacol	<ML [a]	([b])
2,4,5-trichlorophenol	<ML [a]	([b])
2,4,6-trichlorophenol	<ML [a]	([b])
Tetrachlorocatechol	<ML [a]	([b])
Tetrachloroguaiacol	<ML [a]	([b])
2,3,4,6-tetrachlorophenol	<ML [a]	([b])
Pentachlorophenol	<ML [a]	([b])
AOX	2.64 [e]	[e] 1.41

[a] "<ML" means less than the minimum level specified in § 430.01(i) for the particular pollutant.
[b] This regulation does not specify this type of limitation for this pollutant; however, pretreatment control authorities may do so as appropriate.
[c] Picograms per liter.
[d] Grams per 1,000 kilograms (g/kkg).

[e] Kilograms per 1,000 kilograms (kg/kkg).

(2) The following pretreatment standards apply with respect to each fiber line operated by an indirect discharger subject to this section if the indirect discharger discloses to the pretreatment control authority in a report submitted under 40 CFR 403.12(b) that it uses exclusively TCF bleaching processes at that fiber line. These pretreatment standards must be attained on or before April 16, 2001:

SUBPART B

Pollutant or pollutant parameter	PSES (TCF)	
	Maximum for any 1 day	Monthly average
AOX	<ML [a]	([b])

[a] "<ML" means less than the minimum level specified in § 430.01(i) for the particular pollutant.
[b] This regulation does not specify this type of limitation for this pollutant; however, pretreatment control authorities may do so as appropriate.

(b) The following pretreatment standards apply to all indirect dischargers, in accordance with the previous subcategorization scheme. An indirect discharger is not required to meet these pretreatment standards if it certifies to the pretreatment control authority that it is not using these compounds as biocides. In cases when POTWs find it necessary to impose mass effluent limitations, equivalent mass limitations are provided as guidance:

SUBPART B

[Supplemental PSES for bleached kraft facilities where market pulp is produced]

Pollutant or pollutant property	Maximum for any 1 day	
	kg/kkg (or pounds per 1,000 lb) of product	Milligrams/liter
Pentachlorophenol	0.0019	(0.011)(41.6)/y
Trichlorophenol	0.014	(0.082)(41.6)/y
y = wastewater discharged in kgal per ton of product.		

SUBPART B

[Supplemental PSES for bleached kraft facilities where paperboard, coarse paper, and tissue paper are produced]

Pollutant or pollutant property	Maximum for any 1 day	
	kg/kkg (or pounds per 1,000 lb) of product	Milligrams/liter
Pentachlorophenol	0.0016	(0.011)(35.4)/y
Trichlorophenol	0.012	(0.082)(35.4)/y
y = wastewater discharged in kgal per ton of product.		

SUBPART B

[Supplemental PSES for bleached kraft facilities where pulp and fine papers are produced and soda facilities where pulp and paper are produced]

Pollutant or pollutant property	Maximum for any 1 day	
	kg/kkg (or pounds per 1,000 lb) of product	Milligrams/liter
Pentachlorophenol	0.0014	(0.011)(30.9)/y
Trichlorophenol	0.011	(0.082)(30.9)/y
y = wastewater discharged in kgal per ton of product		

(c) An indirect discharger must demonstrate compliance with the pretreatment standards in paragraph (a)(1) of this section by monitoring at the point where the wastewater containing those pollutants leaves the bleach plant.

§ 430.27 Pretreatment standards for new sources (PSNS).

Except as provided in 40 CFR 403.7, any new source subject to this subpart that introduces pollutants into a publicly owned treatment works must:

comply with 40 CFR part 403; and achieve the following pretreatment standards for new sources (PSNS).

(a)(1) The following pretreatment standards apply with respect to each fiber line that is a new source, unless the indirect discharger discloses to the pretreatment control authority in a report submitted under 40 CFR 403.12 that it uses exclusively TCF bleaching processes at that fiber line:

SUBPART B

Pollutant or pollutant property	PSNS	
	Maximum for any 1 day	Monthly average
TCDD	<ML [a]	([b])
TCDF	31.9 [c]	([b])
Chloroform	6.92 [d]	4.14 [d]
Trichlorosyringol	<ML [a]	([b])
3,4,5-trichlorocatechol	<ML [a]	([b])
3,4,6-trichlorocatechol	<ML [a]	([b])
3,4,5-trichloroguaiacol	<ML [a]	([b])
3,4,6-trichloroguaiacol	<ML [a]	([b])
4,5,6-trichloroguaiacol	<ML [a]	([b])
2,4,5-trichlorophenol	<ML [a]	([b])
2,4,6-trichlorophenol	<ML [a]	([b])
Tetrachlorocatechol	<ML [a]	([b])
Tetrachloroguaiacol	<ML [a]	([b])
2,3,4,6-tetrachlorophenol	<ML [a]	([b])
Pentachlorophenol	<ML [a]	([b])
AOX	1.16 [e]	0.814 [e]

[a] "<ML" means less than the minimum level specified in § 430.01(i) for the particular pollutant.
[b] This regulation does not specify this type of limitation for this pollutant; however, pretreatment control authorities may do so as appropriate.
[c] Picograms per liter.
[d] Grams per 1,000 kilograms (g/kkg).
[e] Kilograms per 1,000 kilograms (kg/kkg).

(2) The following pretreatment standards apply with respect to each new source fiber line operated by an indirect discharger subject to this section if the indirect discharger discloses to the pretreatment control authority in a report submitted under 40 CFR 403.12(b) that it uses exclusively TCF bleaching processes at that fiber line:

SUBPART B

Pollutant or pollutant parameter	PSNS (TCF)	
	Maximum for any 1 day	Monthly average
AOX	<ML [a]	([b])

[a] "<ML" means less than the minimum level specified in § 430.01(i) for the particular pollutant.
[b] This regulation does not specify this type of limitation for this pollutant; however, pretreatment control authorities may do so as appropriate.

(b) The following pretreatment standards apply to all new source indirect dischargers, regardless of when they commenced discharge, in accordance with the previous subcategorization scheme. An indirect discharger is not required to meet these pretreatment standards if it certifies to the pretreatment control authority that it is not using these compounds as biocides. In cases when POTWs find it necessary to impose mass-based effluent limitations, equivalent mass limitations are provided as guidance:

SUBPART B

[Supplemental PSNS for bleached kraft facilities where market pulp is produced]

Pollutant or pollutant property	Maximum for any 1 day	
	kg/kkg (or pounds per 1,000 lb) of product	Milligrams/liter
Pentachlorophenol	0.0019	(0.013)(36.6)/y
Trichlorophenol	0.014	(0.093)(36.6)/y
y = wastewater discharged in kgal per ton of product.		

SUBPART B

[Supplemental PSNS for bleached kraft facilities where paperboard, coarse paper, and tissue paper are produced]

Pollutant or pollutant property	Maximum for any 1 day	
	kg/kkg (or pounds per 1,000 lb) of product	Milligrams/liter
Pentachlorophenol	0.0016	(0.012)(31.7)/y
Trichlorophenol	0.012	(0.092)(31.7)/y
y = wastewater discharged in kgal per ton of product.		

SUBPART B

[Supplemental PSNS for bleached kraft facilities where pulp and fine papers are produced and soda facilities where pulp and paper are produced]

Pollutant or pollutant parameter	Maximum for any 1 day	
	kg/kkg (or pounds per 1,000 lb) of product	Milligrams/liter
Pentachlorophenol	0.0014	(0.014)(25.1)/y
Trichlorophenol	0.011	(0.101)(25.1)/y
y = wastewater discharged in kgal per ton of product.		

(c) An indirect discharger must demonstrate compliance with the pretreatment standards in paragraph (a)(1) of this section by monitoring at the point where the wastewater containing those pollutants leaves the bleach plant.

§ 430.28 Best management practices (BMPs).

The definitions and requirements set forth in 40 CFR 430.03 apply to facilities in this subpart.

Subpart C—Unbleached Kraft Subcategory

§ 430.30 Applicability; description of the unbleached kraft subcategory.

The provisions of this subpart are applicable to discharges resulting from: the production of pulp and paper at unbleached kraft mills; the production of pulp and paper at unbleached kraft-neutral sulfite semi-chemical (cross recovery) mills; and the production of pulp and paper at combined unbleached kraft and semi-chemical mills, wherein the spent semi-chemical cooking liquor is burned within the unbleached kraft chemical recovery system.

§ 430.31 Specialized definitions.

For the purpose of this subpart, the general definitions, abbreviations, and methods of analysis set forth in 40 CFR part 401 and § 430.01 of this part shall apply to this subpart.

§ 430.32 Effluent limitations representing the degree of effluent reduction attainable by the application of the best practicable control technology currently available (BPT).

Except as provided in 40 CFR 125.30 through 125.32, any existing point source subject to this subpart must achieve the following effluent limitations representing the degree of effluent reduction attainable by the application of the best practicable control technology currently available (BPT):

SUBPART C

[BPT effluent limitations for unbleached kraft facilities]

Pollutant or pollutant property	Kg/kkg (or pounds per 1,000 lb) of product	
	Maximum for any 1 day	Average of daily values for 30 consecutive days
BOD5	5.6	2.8
TSS	12.0	6.0
pH	(1)	(1)

[1] Within the range of 6.0 to 9.0 at all times.

SUBPART C

[BPT effluent limitations for unbleached kraft facilities producing pulp and paper using the unbleached kraft-neutral sulfite semi-chemical (cross recovery) process]

Pollutant or pollutant property	Kg/kkg (or pounds per 1,000 lb) of product	
	Maximum for any 1 day	Average of daily values for 30 consecutive days
BOD5	8.0	4.0
TSS	12.5	6.25
pH	(1)	(1)

1 Within the range of 6.0 to 9.0 at all times.

SUBPART C

[BPT effluent limitations for unbleached kraft facilities where pulp and paper are produced using a combined unbleached kraft and semi-chemical process, wherein the spent semi-chemical cooking liquor is burned within the unbleached kraft chemical recovery system]

Pollutant or pollutant property	Kg/kkg (or pounds per 1,000 lb) of product	
	Maximum for any 1 day	Average of daily values for 30 consecutive days
BOD5	(a)	(a)
TSS	(a)	(a)
pH	(a)	(a)

a [Reserved].

§ 430.33 Effluent limitations guidelines representing the degree of effluent reduction attainable by the application of the best conventional pollutant control technology (BCT).

Except as provided in 40 CFR 125.30 through 125.32, any existing point source subject to this subpart shall achieve the following effluent limitations representing the degree of effluent reduction attainable by the application of the best conventional pollutant control technology (BCT), except that non-continuous dischargers shall not be subject to the maximum day and average-of-30-consecutive-days limitations, but shall be subject to annual average effluent limitations:

SUBPART C

[BCT effluent limitations for unbleached kraft facilities]

Pollutant or pollutant property	Kg/kkg (or pounds per 1,000 lb) of product		
	Continuous dischargers	Non-continuous dischargers (annual average)	
		Maximum for any 1 day	Average of daily values for 30 consecutive days
BOD5	5.6	2.8	1.9
TSS	12.0	6.0	3.6
pH	(1)	(1)	(1)

1 Within the range of 6.0 to 9.0 at all times.

SUBPART C

[BCT effluent limitations for unbleached kraft-neutral sulfite semi-chemical (cross recovery) process and/or a combined unbleached kraft and semi-chemical process, wherein the spent semi-chemical cooking liquor is burned within the unbleached kraft chemical recovery system]

Pollutant or pollutant property	Kg/kkg (or pounds per 1,000 lb) of product		
	Continuous dischargers		Non-continuous dischargers (annual average)
	Maximum for any 1 day	Average of daily values for 30 consecutive days	
BOD5	8.0	4.0	2.9
TSS	12.5	6.25	3.57
pH	(1)	(1)	(1)

1 Within the range of 6.0 to 9.0 at all times.

§ 430.34 Effluent limitations representing the degree of effluent reduction attainable by the application of the best available technology economically achievable (BAT).

Except as provided in 40 CFR 125.30 through 125.32, any existing point source subject to this subpart where chlorophenolic-containing biocides are used must achieve the following effluent limitations representing the degree of effluent reduction attainable by the application of the best available technology economically achievable (BAT). Non-continuous dischargers shall not be subject to the maximum day mass limitations in kg/kkg (lb/1000 lb), but shall be subject to concentration limitations. Concentration limitations are only applicable to non-continuous dischargers. Permittees not using chlorophenolic-containing biocides must certify to the permit-issuing authority that they are not using these biocides:

SUBPART C

[BAT effluent limitations for unbleached kraft facilities]

Pollutant or pollutant property	Maximum for any 1 day	
	Kg/kkg (or pounds per 1,000 lb) of product	Milligrams/liter
Pentachlorophenol	0.00058	(0.011)(12.6)/y
Trichlorophenol	0.00053	(0.010)(12.6)/y
y=wastewater discharged in kgal per ton of product.		

SUBPART C

[BAT effluent limitations for unbleached kraft facilities where pulp and paper are produced using the unbleached kraft-neutral sulfite semi-chemical (cross recovery) process and/or a combined unbleached kraft and semi-chemical process, wherein the spent semi-chemical cooking liquor is burned within the unbleached kraft chemical recovery system]

Pollutant or pollutant property	Maximum for any 1 day	
	Kg/kkg (or pounds per 1,000 lb) of product	Milligrams/liter
Pentachlorophenol	0.00064	(0.011)(14.0)/y
Trichlorophenol	0.00059	(0.010)(14.0)/y
y=wastewater discharged in kgal per ton of product.		

§ 430.35 New source performance standards (NSPS).

Any new source subject to this subpart must achieve the following new source performance standards (NSPS), except that non-continuous dischargers shall not be subject to the maximum day and average of 30 consecutive days effluent limitations for BOD5 and TSS, but shall be subject to annual average effluent limitations. Also, for non-continuous dischargers, concentration limitations (mg/l) shall apply, where provided. Concentration limitations will only apply to non-continuous dischargers. Only facilities where chlorophenolic-containing biocides are used shall be subject to pentachlorophenol and trichlorophenol limitations. Permittees not using chlorophenolic-containing biocides must certify to the permit-issuing authority that they are not using these biocides:

SUBPART C

[NSPS for unbleached kraft facilities where linerboard is produced]

Pollutant or pollutant property	Kg/kkg (or pounds per 1,000 lb) of product		
	Continuous dischargers		Non-continuous dischargers (annual average)
	Maximum for any 1 day	Average of daily values for 30 consecutive days	
BOD5	3.4	1.8	0.94
TSS	5.8	3.0	1.6
pH	(1)	(1)	(1)

	Maximum for any 1 day	
	Kg/kkg (or pounds per 1,000 lb) of product	Milligrams/liter
Pentachlorophenol	0.00058	(0.015)(9.4)/y
Trichlorophenol	0.00053	(0.013)(9.4)/y
y = wastewater discharged in kgal per ton at all times.		

[1] Within the range of 5.0 to 9.0 at all times.

SUBPART C

[NSPS for unbleached kraft facilities where bag paper and other mixed products are produced]

Pollutant or pollutant property	Kg/kkg (or pounds per 1,000 lb) of product		
	Continuous dischargers		Non-continuous dischargers (annual average)
	Maximum for any 1 day	Average of daily values for 30 consecutive days	
BOD5	5.0	2.71	1.4
TSS	9.1	4.8	2.5
pH	(1)	(1)	(1)

	Maximum for any 1 day	
	Kg/kkg (or pounds per 1,000 lb) of product	Milligrams/liter
Pentachlorophenol	0.00058	(0.012)(11.4)/y
Trichlorophenol	0.00053	(0.011)(11.4)/y
y = wastewater discharged in kgal per ton at all times.		

[1] Within the range of 5.0 to 9.0 at all times.

SUBPART C

[NSPS for unbleached kraft facilities where pulp and paper are produced using the unbleached kraft-neutral sulfite semi-chemical (cross recovery) process and/or a combined unbleached kraft and semi-chemical process, wherein the spent semi-chemical cooking liquor is burned within the unbleached kraft chemical recovery system]

Pollutant or pollutant property	Kg/kkg (or pounds per 1,000 lb) of product		
	Continuous dischargers		Non-continuous dischargers (annual average)
	Maximum for any 1 day	Average of daily values for 30 consecutive days	
BOD5	3.9	2.1	1.1

SUBPART C—Continued

[NSPS for unbleached kraft facilities where pulp and paper are produced using the unbleached kraft-neutral sulfite semi-chemical (cross recovery) process and/or a combined unbleached kraft and semi-chemical process, wherein the spent semi-chemical cooking liquor is burned within the unbleached kraft chemical recovery system]

Pollutant or pollutant property	Kg/kkg (or pounds per 1,000 lb) of product		
	Continuous dischargers		Non-continuous dischargers (annual average)
	Maximum for any 1 day	Average of daily values for 30 consecutive days	
TSS	7.3	3.8	1.9
pH	(1)	(1)	(1)

	Maximum for any 1 day	
	Kg/kkg (or pounds per 1,000 lb) of product	Milligrams/liter
Pentachlorophenol	0.00064	(0.013)(11.5)/y
Trichlorophenol	0.00059	(0.012)(11.5)/y
y = wastewater discharged in kgal per ton at all times.		

[1] Within the range of 5.0 to 9.0 at all times.

§ 430.36 Pretreatment standards for existing sources (PSES).

Except as provided in 40 CFR 403.7 and 403.13, any existing source subject to this subpart that introduces pollutants into a publicly owned treatment works must: comply with 40 CFR part 403; and achieve the following pretreatment standards for existing sources (PSES) if it uses chlorophenolic-containing biocides. Permittees not using chlorophenolic-containing biocides must certify to the permit-issuing authority that they are not using those biocides. PSES must be attained on or before July 1, 1984:

SUBPART C

[PSES for unbleached kraft facilities]

Pollutant or pollutant property	Maximum for any 1 day	
	Milligrams/liter	Kg/kkg (or pounds per 1,000 lb) of product [a]
Pentachlorophenol	(0.011)(12.6)/y	0.00058
Trichlorophenol	(0.010)(12.6)/y	0.00053
y = wastewater discharged in kgal per ton of product.		

[a] The following equivalent mass limitations are provided as guidance in cases where POTWs find it necessary to impose mass effluent limitations.

SUBPART C

[PSES for unbleached kraft facilities where pulp and paper are produced using the unbleached kraft-neutral sulfite semi-chemical (cross recovery) process and/or a combined unbleached kraft and semi-chemical process, wherein the spent semi-chemical cooking liquor is burned within the unbleached kraft chemical recovery system]

Pollutant or pollutant property	Maximum for any 1 day	
	Milligrams/liter	Kg/kkg (or pounds per 1,000 lb) of product [a]
Pentachlorophenol	(0.011)(14.0)/y	0.00064
Trichlorophenol	(0.010)(14.0)/y	0.00059
y = wastewater discharged in kgal per ton of product.		

[a] The following equivalent mass limitations are provided as guidance in cases where POTWs find it necessary to impose mass effluent limitations.

§ 430.37 Pretreatment standards for new sources (PSNS).

(a) Except as provided in 40 CFR 403.7, any new source subject to this subpart that introduces pollutants into a publicly owned treatment works must: comply with 40 CFR part 403; and achieve the following pretreatment standards for new sources (PSNS) if it uses chlorophenolic-containing biocides. Permittees not using chlorophenolic-containing biocides must certify to the permit-issuing authority that they are not using these biocides:

SUBPART C

[PSNS for unbleached kraft facilities where linerboard is produced]

Pollutant or pollutant property	Maximum for any 1 day	
	Milligrams/liter	Kg/kkg (or pounds per 1,000 lb) of product [a]
Pentachlorophenol	(0.015)(9.4)/y	0.00058
Trichlorophenol	(0.013)(9.4)/y	0.00053
y = wastewater discharged in kgal per ton of product.		

[a] The following equivalent mass limitations are provided as guidance in cases where POTWs find it necessary to impose mass effluent limitations.

SUBPART C

[PSNS for unbleached kraft facilities where bag paper and other mixed products are produced]

Pollutant or pollutant property	Maximum for any 1 day	
	Milligrams/liter	Kg/kkg (or pounds per 1,000 lb) of product [a]
Pentachlorophenol	(0.012)(11.4)/y	0.00058
Trichlorophenol	(0.011)(11.4)/y	0.00053
y = wastewater discharged in kgal per ton of product.		

[a] The following equivalent mass limitations are provided as guidance in cases where POTWs find it necessary to impose mass effluent limitations.

SUBPART C

[PSNS for unbleached kraft facilities where pulp and paper are produced using the unbleached kraft-neutral sulfite semi-chemical (cross recovery) process and/or a combined unbleached kraft and semi-chemical process, wherein the spent semi-chemical cooking liquor is burned within the unbleached kraft chemical recovery system]

Pollutant or pollutant property	Maximum for any 1 day	
	Milligrams/liter	Kg/kkg (or pounds per 1,000 lb) of product [a]
Pentachlorophenol	(0.013)(11.5)/y	0.00064
Trichlorophenol	(0.012)(11.5)/y	0.00059
y = wastewater discharged in kgal per ton of product.		

[a] The following equivalent mass limitations are provided as guidance in cases where POTWs find it necessary to impose mass effluent limitations.

Subpart D—Dissolving Sulfite Subcategory

§ 430.40 Applicability; description of the dissolving sulfite subcategory.

The provisions of this subpart are applicable to discharges resulting from the production of pulp at dissolving sulfite mills.

§ 430.41 Specialized definitions.

For the purpose of this subpart, the general definitions, abbreviations, and methods of analysis set forth in 40 CFR part 401 and § 430.01 of this part shall apply to this subpart.

§ 430.42 Effluent limitations representing the degree of effluent reduction attainable by the application of the best practicable control technology currently available (BPT).

(a) Except as provided in 40 CFR 125.30 through 125.32, any existing point source subject to this subpart must achieve the following effluent limitations representing the degree of effluent reduction attainable by the application of the best practicable control technology currently available (BPT), except that non-continuous dischargers shall not be subject to the maximum day and average of 30 consecutive days limitations but shall be subject to annual average effluent limitations:

SUBPART D

[BPT effluent limitations for dissolving sulfite pulp facilities where nitration grade pulp is produced]

Pollutant or pollutant property	Kg/kkg (or pounds per 1,000 lb) of product		
	Continuous dischargers		Non-continuous dischargers (annual average)
	Maximum for any 1 day	Average of daily values for 30 consecutive days	
BOD5	41.4	21.5	12.1
TSS	70.65	38.05	20.9
pH	(1)	(1)	(1)

1 Within the range of 5.0 to 9.0 at all times.

SUBPART D

[BPT effluent limitations for dissolving sulfite pulp facilities where viscose grade pulp is produced]

Pollutant or pollutant property	Kg/kkg (or pounds per 1,000 lb) of product		
	Continuous dischargers		Non-continuous dischargers (annual average)
	Maximum for any 1 day	Average of daily values for 30 consecutive days	
BOD5	44.3	23.0	12.9
TSS	70.65	38.05	20.9
pH	(1)	(1)	(1)

1 Within the range of 5.0 to 9.0 at all times.

SUBPART D

[BPT effluent limitations for dissolving sulfite pulp facilities where cellophane grade pulp is produced]

Pollutant or pollutant property	Kg/kkg (or pounds per 1,000 lb) of product		
	Continuous dischargers		Non-continuous dischargers (annual average)
	Maximum for any 1 day	Average of daily values for 30 consecutive days	
BOD5	48.05	24.95	14.0
TSS	70.65	38.05	20.9
pH	(1)	(1)	(1)

1 Within the range of 5.0 to 9.0 at all times.

SUBPART D

[BPT effluent limitations for dissolving sulfite pulp facilities where acetate grade pulp is produced]

Pollutant or pollutant property	Kg/kkg (or pounds per 1,000 lb) of product		
	Continuous dischargers		Non-continuous dischargers (annual average)
	Maximum for any 1 day	Average of daily values for 30 consecutive days	
BOD5	[1]50.80	[1]26.40	[1]14.83
TSS	70.65	38.05	20.9
pH	(2)	(2)	(2)

1 BOD5 effluent limitations were remanded (Weyerhaeuser Company, et al v. Costle, 590 F. 2nd 1011; D.C. Circuit 1978).
2 Within the range of 5.0 to 9.0 at all times.

(b) The following limitations establish the quantity or quality of pollutants or pollutant properties, controlled by this section, resulting from the use of wet barking operations, which may be discharged by a point source subject to the provisions of this subpart. These limitations are in addition to the limitations set forth in paragraph (a) of this section and shall be calculated using the proportion of the mill's total production due to use of logs which are subject to such operations. Non-continuous dischargers shall not be subject to the maximum day and average of 30 consecutive days limitations, but shall be subject to annual average effluent limitations:

SUBPART D

[BPT effluent limitations]

Pollutant or pollutant property	Kg/kkg (or pounds per 1,000 lb) of product		
	Continuous dischargers		Non-continuous dischargers (annual average)
	Maximum for any 1 day	Average of daily values for 30 consecutive days	
BOD5	0.7	0.35	0.2
TSS	0.15	0.1	0.05
pH	(1)	(1)	(1)

1 Within the range of 5.0 to 9.0 at all times.

(c) The following limitations establish the quantity or quality of pollutants or pollutant parameters, controlled by this section, resulting from the use of log washing or chip washing operations, which may be discharged by a point source subject to the provisions of this subpart. These limitations are in addition to the limitations set forth in paragraph (a) of this section and shall be calculated using the proportion of the mill's total production due to use of logs and/or chips which are subject to such operations. Non-continuous dischargers shall not be subject to the maximum day and average of 30 consecutive days limitations, but shall be subject to the annual average effluent limitations:

SUBPART D

[BPT effluent limitations]

Pollutant or pollutant property	Kg/kkg (or pounds per 1,000 lb) of product		
	Continuous dischargers		Non-continuous dischargers (annual average)
	Maximum for any 1 day	Average of daily values for 30 consecutive days	
BOD5	0.15	0.1	0.05
TSS	0.15	0.1	0.05
pH	(1)	(1)	(1)

1 Within the range of 5.0 to 9.0 at all times.

(d) The following limitations establish the quantity or quality of pollutants or pollutant properties, controlled by this section, resulting from the use of log flumes or log ponds, which may be discharged by a point source subject to the provisions of this subpart. These limitations are in addition to the limitations set forth in paragraph (a) of this section and shall be calculated using the proportion of the mill's total production due to use of logs which are subject to such operations. Non-continuous dischargers shall not be subject to the maximum day and average of 30 consecutive days limitations but shall be subject to the annual average effluent limitations:

SUBPART D

[BPT effluent limitations]

Pollutant or pollutant property	Kg/kkg (or pounds per 1,000 lb) of product		
	Continuous dischargers		Non-continuous dischargers (annual average)
	Maximum for any 1 day	Average of daily values for 30 consecutive days	
BOD5	0.15	0.1	0.05
TSS	0.15	0.1	0.05
pH	(1)	(1)	(1)

[1] Within the range of 5.0 to 9.0 at all times.

§ 430.43 Effluent limitations guidelines representing the degree of effluent reduction attainable by the application of the best conventional pollutant control technology (BCT).

Except as provided in 40 CFR 125.30 through 125.32, any existing point source subject to this subpart shall achieve the following effluent limitations representing the degree of effluent reduction attainable by the application of the best conventional pollutant control technology (BCT): The limitations shall be the same as those specified for conventional pollutants (which are defined in 40 CFR 401.16) in § 430.42 of this subpart for the best practicable control technology currently available (BPT).

§ 430.44 Effluent limitations representing the degree of effluent reduction attainable by the application of the best available technology economically achievable (BAT).

Except as provided in 40 CFR 125.30 through 125.32, any existing point source subject to this subpart where chlorophenolic-containing biocides are used must achieve the following effluent limitations representing the degree of effluent reduction attainable by the application of the best available technology economically achievable (BAT). Non-continuous dischargers shall not be subject to the maximum day mass limitations in kg/kkg (lb/1000 lb) but shall be subject to concentration limitations. Concentration limitations are only applicable to non-continuous dischargers. Permittees not using chlorophenolic-containing biocides must certify to the permit-issuing authority that they are not using these biocides:

SUBPART D

[BAT effluent limitations for dissolving sulfite pulp facilities where nitration, viscose, or cellophane pulps are produced]

Pollutant or pollutant property	Maximum for any 1 day	
	Kg/kkg (or pounds per 1,000 lb) of product	Milligrams/liter
Pentachlorophenol	0.0030	(0.011)(66.0)/y
Trichlorophenol	0.019	(0.068)(66.0)/y
y = wastewater discharged in kgal per ton of product.		

SUBPART D

[BAT effluent limitations for dissolving sulfite pulp facilities where acetate grade pulp is produced]

Pollutant or pollutant property	Maximum for any 1 day	
	Kg/kkg (or pounds per 1,000 lb) of product	Milligrams/liter
Pentachlorophenol	0.0033	(0.011)(72.7)/y
Trichlorophenol	0.021	(0.068)(72.7)/y
y = wastewater discharged in kgal per ton of product.		

§ 430.45 New source performance standards (NSPS).

Any new source subject to this subpart must achieve the following new source performance standards (NSPS), except that non-continuous dischargers shall not be subject to the maximum day and average of 30 consecutive days effluent limitations for BOD5 and TSS, but shall be subject to annual average effluent limitations. Also, for non-continuous dischargers, concentration limitations (mg/l) shall apply, where provided. Concentration limitations will only apply to non-continuous dischargers. Only facilities where chlorophenolic-containing biocides are used shall be subject to pentachlorophenol and trichlorophenol limitations. Permittees not using chlorophenolic-containing biocides

must certify to the permit-issuing authority that they are not using these biocides:

SUBPART D

[NSPS for dissolving sulfite pulp facilities where nitration grade pulp is produced]

Pollutant or pollutant property	Kg/kkg (or pounds per 1,000 lb) of product		
	Continuous dischargers		Non-continuous dischargers (annual average)
	Maximum for any 1 day	Average of daily values for 30 consecutive days	
BOD5	26.9	14.5	7.59
TSS	40.8	21.3	11.2
pH	(1)	(1)	(1)

	Maximum for any 1 day	
	Kg/kkg (or pounds per 1,000 lb) of product	Milligrams/liter
Pentachlorophenol	0.0030	(0.012)(59.0)/y
Trichlorophenol	0.019	(0.012)(59.0)/y
y = wastewater discharged in kgal per ton at all times.		

[1] Within the range of 5.0 to 9.0 at all times.

SUBPART D

[NSPS for dissolving sulfite pulp facilities where viscose grade pulp is produced]

Pollutant or pollutant property	Kg/kkg (or pounds per 1,000 lb) of product		
	Continuous dischargers		Non-continuous dischargers (annual average)
	Maximum for any 1 day	Average of daily values for 30 consecutive days	
BOD5	28.7	15.5	8.12
TSS	40.8	21.3	11.2
pH	(1)	(1)	(1)

	Maximum for any 1 day	
	Kg/kkg (or pounds per 1,000 lb) of product	Milligrams/liter
Pentachlorophenol	0.0030	(0.012)(59.0)/y
Trichlorophenol	0.019	(0.012)(59.0)/y
y = wastewater discharged in kgal per ton at all times.		

[1] Within the range of 5.0 to 9.0 at all times.

SUBPART D

[NSPS for dissolving sulfite pulp facilities where cellophane grade pulp is produced]

Pollutant or pollutant property	Kg/kkg (or pounds per 1,000 lb) of product		
	Continuous dischargers		Non-continuous dischargers (annual average)
	Maximum for any 1 day	Average of daily values for 30 consecutive days	
BOD5	31.2	16.8	8.80
TSS	40.8	21.3	11.2
pH	(1)	(1)	(1)

	Maximum for any 1 day	
	Kg/kkg (or pounds per 1,000 lb) of product	Milligrams/liter
Pentachlorophenol	0.0030	(0.012)(59.0)/y
Trichlorophenol	0.019	(0.076)(59.0)/y
y = wastewater discharged in kgal per ton at all times.		

[1] Within the range of 5.0 to 9.0 at all times.

SUBPART D

[NSPS for dissolving sulfite pulp facilities where acetate grade pulp is produced]

Pollutant or pollutant property	Kg/kkg (or pounds per 1,000 lb) of product		
	Continuous dischargers		Non-continuous dischargers (annual average)
	Maximum for any 1 day	Average of daily values for 30 consecutive days	
BOD5	39.6	21.4	11.2
TSS	41.1	21.5	11.3
pH	(1)	(1)	(1)

	Maximum for any 1 day	
	Kg/kkg (or pounds per 1,000 lb) of product	Milligrams/liter
Pentachlorophenol	0.0033	(0.012)(65.7)/y
Trichlorophenol	0.021	(0.075)(65.7)/y
y = wastewater discharged in kgal per ton at all times.		

[1] Within the range of 5.0 to 9.0 at all times.

§ 430.46 Pretreatment standards for existing sources (PSES).

Except as provided in 40 CFR 403.7 and 403.13, any existing source subject to this subpart that introduces pollutants into a publicly owned treatment works must: comply with 40 CFR part 403; and achieve the following pretreatment standards for existing sources (PSES) if it uses chlorophenolic-containing biocides. Permittees not using chlorophenolic-containing biocides must certify to the permit-issuing authority that they are not using these biocides. PSES must be attained on or before July 1, 1984:

SUBPART D

[PSES for dissolving sulfite pulp facilities where nitration, viscose, or cellophane grade pulps are produced]

Pollutant or pollutant property	Maximum for any 1 day	
	Milligrams/liter (mg/l)	Kg/kkg (or pounds per 1,000 lb) of product[a]
Pentachlorophenol	(0.011)(66.0)/y	0.0030
Trichlorophenol	(0.082)(66.0)/y	0.023
y = wastewater discharged in kgal per ton of product.		

[a] The following equivalent mass limitations are provided as guidance in cases when POTWs find it necessary to impose mass effluent limitations.

SUBPART D

[PSES for dissolving sulfite pulp facilities where acetate grade pulp is produced]

Pollutant or pollutant property	Maximum for any 1 day	
	Milligrams/liter (mg/l)	Kg/kkg (or pounds per 1,000 lb) of product[a]
Pentachlorophenol	(0.011)(72.7)/y	0.0033
Trichlorophenol	(0.082)(72.7)/y	0.025
y = wastewater discharged in kgal per ton of product.		

[a] The following equivalent mass limitations are provided as guidance in cases when POTWs find it necessary to impose mass effluent limitations.

§ 430.47 Pretreatment standards for new sources (PSNS).

Except as provided in 40 CFR 403.7, any new source subject to this subpart that introduces pollutants into a publicly owned treatment works must: comply with 40 CFR part 403; and achieve the following pretreatment standards for new sources (PSNS) if it uses chlorophenolic-containing biocides. Permittees not using chlorophenolic-containing biocides must certify to the permit-issuing authority that they are not using these biocides:

SUBPART D

[PSNS for dissolving sulfite pulp facilities where nitration, viscose, or cellophane grade pulps are produced]

Pollutant or pollutant property	Maximum for any 1 day	
	Milligrams/liter (mg/l)	Kg/kkg (or pounds per 1,000 lb) of product[a]
Pentachlorophenol	(0.012)(59.0)/y	0.0030
Trichlorophenol	(0.092)(59.0)/y	0.023
y = wastewater discharged in kgal per ton of product.		

[a] The following equivalent mass limitations are provided as guidance in cases when POTWs find it necessary to impose mass effluent limitations.

SUBPART D

[PSNS for dissolving sulfite pulp facilities where acetate grade pulp is produced]

Pollutant or pollutant property	Maximum for any 1 day	
	Milligrams/liter (mg/l)	Kg/kkg (or pounds per 1,000 lb) of product[a]
Pentachlorophenol	(0.012)(65.7)/y	0.0033
Trichlorophenol	(0.091)(65.7)/y	0.025
y=wastewater discharged in kgal per ton of product.		

[a] The following equivalent mass limitations are provided as guidance in cases when POTWs find it necessary to impose mass effluent limitations.

Subpart E—Papergrade Sulfite Subcategory

§ 430.50 Applicability; description of the papergrade sulfite subcategory.

The provisions of this subpart apply to discharges resulting from the: integrated production of pulp and paper at papergrade sulfite mills, where blow pit pulp washing techniques are used; and the integrated production of pulp and paper at papergrade sulfite mills where vacuum or pressure drums are used to wash pulp.

§ 430.51 Specialized definitions.

(a) Except as provided in paragraphs (b) and (c) of this section, the general definitions, abbreviations, and methods of analysis set forth in 40 CFR part 401 and § 430.01 of this part apply to this subpart.

(b) *Sulfite cooking liquor* is defined as bisulfite cooking liquor when the pH of the liquor is between 3.0 and 6.0 and as acid sulfite cooking liquor when the pH is less than 3.0.

(c) For this subpart, the segments for the papergrade sulfite subcategory are defined as follows:

(1) The calcium-, magnesium-, or sodium-based sulfite pulp segment consists of papergrade sulfite mills where pulp and paper are produced using an acidic cooking liquor of calcium, magnesium, or sodium sulfite, unless those mills are specialty grade sulfite mills;

(2) The ammonium-based sulfite pulp segment consists of papergrade sulfite mills where pulp and paper are produced using an acidic cooking liquor of ammonium sulfite, unless those mills are specialty grade sulfite mills;

(3) The specialty grade sulfite pulp segment consists of those papergrade sulfite mills where a significant portion of production is characterized by pulp with a high percentage of alpha cellulose and high brightness sufficent to produce end products such as plastic molding compounds, saturating and laminating products, and photographic papers. The specialty grade segment also includes those mills where a major portion of production is 91 ISO brightness and above.

§ 430.52 Effluent limitations representing the degree of effluent reduction attainable by the application of the best practicable control technology currently available (BPT).

(a) Except as provided in 40 CFR 125.30 through 125.32, any existing point source subject to this subpart must achieve the following effluent limitations representing the degree of effluent reduction attainable by the application of the best practicable control technology currently available (BPT):

SUBPART E

[Bisulfite liquor/surface condensers; BPT effluent limitations for papergrade sulfite facilities where blow pit washing techniques are used]

Pollutant or pollutant property	Kg/kkg (or pounds per 1,000 lb) of product		
	Continuous dischargers		Non-continuous dischargers (annual average)
	Maximum for any 1 day	Average of daily values for 30 consecutive days	
BOD5	31.8	16.55	9.30
TSS	43.95	23.65	12.99
pH	(1)	(1)	(1)

1 Within the range of 5.0 to 9.0 at all times.

SUBPART E

[Bisulfite liquor/barometric condensers; BPT effluent limitations for papergrade sulfite facilities where blow pit washing techniques are used]

Pollutant or pollutant property	Kg/kkg (or pounds per 1,000 lb) of product		
	Continuous dischargers		Non-continuous dischargers (annual average)
	Maximum for any 1 day	Average of daily values for 30 consecutive days	
BOD5	34.7	18.05	10.14
TSS	52.2	28.1	15.44
pH	(1)	(1)	(1)

1 Within the range of 5.0 to 9.0 at all times.

SUBPART E

[Acid sulfite liquor/surface condensers; BPT effluent limitations for papergrade sulfite facilities where blow pit washing techniques are used]

Pollutant or pollutant property	Kg/kkg (or pounds per 1,000 lb) of product		
	Continuous dischargers		Non-continuous dischargers (annual average)
	Maximum for any 1 day	Average of daily values for 30 consecutive days	
BOD5	32.3	16.8	9.44
TSS	43.95	23.65	12.99
pH	(1)	(1)	(1)

1 Within the range of 5.0 to 9.0 at all times.

SUBPART E

[Acid sulfite liquor/barometric condensers; BPT effluent limitations for papergrade sulfite facilities where blow pit washing techniques are used]

Pollutant or pollutant property	Kg/kkg (or pounds per 1,000 lb) of product		
	Continuous dischargers		Non-continuous dischargers (annual average)
	Maximum for any 1 day	Average of daily values for 30 consecutive days	
BOD5	35.55	18.5	10.39
TSS	52.2	28.1	15.44
pH	(1)	(1)	(1)

1 Within the range of 5.0 to 9.0 at all times.

SUBPART E

[Bisulfite liquor/surface condensers; BPT effluent limitations for papergrade sulfite facilities where vacuum or pressure drums are used to wash pulp]

Pollutant or pollutant property	Kg/kkg (or pounds per 1,000 lb) of product		
	Continuous dischargers		Non-continuous dischargers (annual average)
	Maximum for any 1 day	Average of daily values for 30 consecutive days	
BOD5	26.7	13.9	7.81
TSS	43.95	23.65	12.99
pH	(1)	(1)	(1)

1 Within the range of 5.0 to 9.0 at all times.

NOTE: Limitations above do not apply to mills using continuous digesters.

SUBPART E

[Bisulfite liquor/barometric condensers; BPT effluent limitations for papergrade sulfite facilities where vacuum or pressure drums are used to wash pulp]

Pollutant or pollutant property	Kg/kkg (or pounds per 1,000 lb) of product		
	Continuous dischargers		Non-continuous dischargers (annual average)
	Maximum for any 1 day	Average of daily values for 30 consecutive days	
BOD5	29.4	15.3	8.60
TSS	52.2	28.1	15.44

SUBPART E—Continued

[Bisulfite liquor/barometric condensers; BPT effluent limitations for papergrade sulfite facilities where vacuum or pressure drums are used to wash pulp]

Pollutant or pollutant property	Kg/kkg (or pounds per 1,000 lb) of product		
	Continuous dischargers		Non-continuous dischargers (annual average)
	Maximum for any 1 day	Average of daily values for 30 consecutive days	
pH	(1)	(1)	(1)

1 Within the range of 5.0 to 9.0 at all times.
NOTE: Limitations above do not apply to mills using continuous digesters.

SUBPART E

[Acid sulfite liquor/surface condensers; BPT effluent limitations for papergrade sulfite facilities where vacuum or pressure drums are used to wash pulp]

Pollutant or pollutant property	Kg/kkg (or pounds per 1,000 lb) of product		
	Continuous dischargers		Non-continuous dischargers (annual average)
	Maximum for any 1 day	Average of daily values for 30 consecutive days	
BOD5	29.75	15.5	8.71
TSS	43.95	23.65	12.99
pH	(1)	(1)	(1)

1 Within the range of 5.0 to 9.0 at all times.
NOTE: Limitations above do not apply to mills using continuous digesters.

SUBPART E

[Acid sulfite liquor/barometric condensers; BPT effluent limitations for papergrade sulfite facilities where vacuum or pressure drums are used to wash pulp]

Pollutant or pollutant property	Kg/kkg (or pounds per 1,000 lb) of product		
	Continuous dischargers		Non-continuous dischargers (annual average)
	Maximum for any 1 day	Average of daily values for 30 consecutive days	
BOD5	32.5	16.9	9.49
TSS	52.2	28.1	15.44
pH	(1)	(1)	(1)

1 Within the range of 5.0 to 9.0 at all times.
NOTE: Limitations above do not apply to mills using continuous digesters.

SUBPART E

[Continuous digesters; BPT effluent limitations for papergrade sulfite facilities where vacuum or pressure drums are used to wash pulp]

Pollutant or pollutant property	Kg/kkg (or pounds per 1,000 lb) of product		
	Continuous dischargers		Non-continuous dischargers (annual average)
	Maximum for any 1 day	Average of daily values for 30 consecutive days	
BOD5	38.15	19.85	11.15
TSS	53.75	28.95	15.91

SUBPART E—Continued

[Continuous digesters; BPT effluent limitations for papergrade sulfite facilities where vacuum or pressure drums are used to wash pulp]

Pollutant or pollutant property	Kg/kkg (or pounds per 1,000 lb) of product		
	Continuous dischargers		Non-continuous dischargers (annual average)
	Maximum for any 1 day	Average of daily values for 30 consecutive days	
pH	(1)	(1)	(1)

1 Within the range of 5.0 to 9.0 at all times.

(b) The following limitations establish the quantity or quality of pollutants or pollutant properties, controlled by this section, resulting from the use of wet barking operations, which may be discharged by a point source subject to the provisions of this subpart. These limitations are in addition to the limitations set forth in paragraph (a) of this section and shall be calculated using the proportion of the mill's total production due to use of logs which are subject to such operations:

SUBPART E

[BPT effluent limitations for papergrade sulfite facilities where blow pit washing techniques are used]

Pollutant or pollutant property	Kg/kkg (or pounds per 1,000 lb) of product		
	Continuous dischargers		Non-continuous dischargers (annual average)
	Maximum for any 1 day	Average of daily values for 30 consecutive days	
BOD5	2.7	1.45	0.80
TSS	7.5	3.95	2.19
pH	(1)	(1)	(1)

1 Within the range of 5.0 to 9.0 at all times.

SUBPART E

[BPT effluent limitations for papergrade sulfite facilities where vacuum or pressure drums are used to wash pulp]

Pollutant or pollutant property	Kg/kkg (or pounds per 1,000 lb) of product		
	Continuous dischargers		Non-continuous dischargers (annual average)
	Maximum for any 1 day	Average of daily values for 30 consecutive days	
BOD5	3.05	1.6	0.90
TSS	7.5	3.95	2.19
pH	(1)	(1)	(1)

1 Within the range of 5.0 to 9.0 at all times.

(c) The following limitations establish the quantity or quality of pollutants or pollutant parameters, controlled by this section, resulting from the use of log washing or chip washing operations, which may be discharged by a point source subject to the provisions of this subpart. These limitations are in addition to the limitations set forth in paragraph (a) of this section and shall be calculated using the proportion of the mill's total production due to use of logs and/or chips which are subject to such operations:

SUBPART E

[BPT effluent limitations for papergrade sulfite facilities where blow pit washing techniques are used]

Pollutant or pollutant property	Kg/kkg (or pounds per 1,000 lb) of product		
	Continuous dischargers		Non-continuous dischargers (annual average)
	Maximum for any 1 day	Average of daily values for 30 consecutive days	
BOD5	0.15	0.1	0.05
TSS	2.55	1.35	0.75
pH	(1)	(1)	(1)

1 Within the range of 5.0 to 9.0 at all times.

SUBPART E

[BPT effluent limitations for papergrade sulfite facilities where vacuum or pressure drums are used to wash pulp]

Pollutant or pollutant property	Kg/kkg (or pounds per 1,000 lb) of product		
	Continuous dischargers		Non-continuous dischargers (annual average)
	Maximum for any 1 day	Average of daily values for 30 consecutive days	
BOD5	0.35	0.2	0.1
TSS	2.55	1.35	0.75
pH	(1)	(1)	(1)

1 Within the range of 5.0 to 9.0 at all times.

(d) The following limitations establish the quantity or quality of pollutants or pollutant properties, controlled by this section, resulting from the use of log flumes or log ponds, which may be discharged by a point source subject to the provisions of this subpart. These limitations are in addition to the limitations set forth in paragraph (a) of this section and shall be calculated using the proportion of the mill's total production due to use of logs which are subject to such operations:

SUBPART E

[BPT effluent limitations for papergrade sulfite facilities where blow pit washing techniques are used]

Pollutant or pollutant property	Kg/kkg (or pounds per 1,000 lb) of product		
	Continuous dischargers		Non-continuous dischargers (annual average)
	Maximum for any 1 day	Average of daily values for 30 consecutive days	
BOD5	0.35	0.2	0.1
TSS	1.7	0.9	0.5
pH	(1)	(1)	(1)

1 Within the range of 5.0 to 9.0 at all times.

SUBPART E

[BPT effluent limitations for papergrade sulfite facilities where vacuum or pressure drums are used to wash pulp]

Pollutant or pollutant property	Kg/kkg (or pounds per 1,000 lb) of product		
	Continuous dischargers		Non-continuous dischargers (annual average)
	Maximum for any 1 day	Average of daily values for 30 consecutive days	
BOD5	0.7	0.35	0.2
TSS	1.70	0.9	0.5
pH	(1)	(1)	(1)

[1] Within the range of 5.0 to 9.0 at all times.

§ 430.53 Effluent limitations representing the degree of effluent reduction attainable by the application of the best conventional pollutant control technology (BCT).

Except as provided in 40 CFR 125.30 through 125.32, any existing point source subject to this subpart must achieve the following effluent limitations representing the degree of effluent reduction attainable by the application of the best conventional pollutant control technology (BCT). The limitations shall be the same as those specified for conventional pollutants in § 430.52 of this subpart for the best practicable control technology currently available (BCT).

§ 430.54 Effluent limitations representing the degree of effluent reduction attainable by the application of best available technology economically achievable (BAT).

Except as provided in 40 CFR 125.30 through 125.32, any existing point source subject to this subpart must achieve the following effluent limitations representing the degree of effluent reduction attainable by the application of the best available technology economically achievable (BAT).

(a) (1) The following effluent limitations apply to all dischargers in the calcium-, magnesium-, or sodium-based sulfite pulp segment:

SUBPART E

[Production of Calcium-, Magnesium-, or Sodium-based Sulfite Pulps]

Pollutant or pollutant property	BAT effluent limitations			
	Continuous dischargers		Non-continuous dischargers	
	Maximum for any 1 day	Monthly average	Maximum for any 1 day	Annual average
	kg/kkg (or pounds per 1,000 lb) of product			
AOX	<ML[a]	([b])	<ML[a]	([b])
COD	([c])	([c])	([c])	([c])

[a] "<ML" means less than the minimum level specified in § 430.01(i) for the particular pollutant.
[b] This regulation does not specify this type of limitation for this pollutant; however, permitting authorities may do so as appropriate.
[c] [Reserved].

(2)(i) The following effluent limitations apply to all dischargers in the ammonium-based sulfite pulp segment:

SUBPART E—PRODUCTION OF AMMONIUM-BASED SULFITE PULPS

Pollutant or pollutant property	BAT effluent limitations	
	Maximum for any 1 day	Monthly average
TCDD[a]	<ML[b]	([c])
TCDF[a]	<ML[b]	([c])
Chloroform[a]	([d])	([c])
Trichlorosyringol[a]	<ML[b]	([c])
3,4,5-trichlorocatechol[a]	<ML[b]	([c])
3,4,6-trichlorocatechol[a]	<ML[b]	([c])
3,4,5-trichloroguaiacol[a]	<ML[b]	([c])
3,4,6-trichloroguaiacol[a]	<ML[b]	([c])
4,5,6-trichloroguaiacol[a]	<ML[b]	([c])
2,4,5-trichlorophenol[a]	<ML[b]	([c])
2,4,6-trichlorophenol[a]	<ML[b]	([c])
Tetrachlorocatechol[a]	<ML[b]	([c])
Tetrachloroguaiacol[a]	<ML[b]	([c])
2,3,4,6-tetrachlorophenol[a]	<ML[b]	([c])
Pentachlorophenol[a]	<ML[b]	([c])

	Continuous dischargers		Non-continuous dischargers	
	Maximum for any 1 day	Monthly average	Maximum for any 1 day	Annual average
	kg/kkg (or pounds per 1,000 lb) of product			
AOX	(d)	(d)	(d)	(d)
COD	(d)	(d)	(d)	(d)

[a] These limitations do not apply with respect to fiber lines that use a TCF bleaching process as disclosed by the discharger in its permit application under 40 CFR 122.21(g)(3) and certified under 40 CFR 122.22.
[b] "<ML" means less than the minimum level specified in § 430.01(i) for the particular pollutant.
[c] This regulation does not specify this type of limitation for this pollutant; however, permitting authorities may do so as appropriate.
[d] [Reserved].

(ii) The following effluent limitations apply to all dischargers in the ammonium-based sulfite pulp segment with respect to each fiber line that uses exclusively TCF bleaching processes, as disclosed by the discharger in its NPDES permit application under 40 CFR 122.21(g)(3) and certified under 40 CFR 122.22:

SUBPART E—PRODUCTION OF AMMONIUM-BASED SULFITE PULPS

Pollutant or pollutant property	BAT effluent limitations (TCF)			
	Continuous dischargers		Non-continuous dischargers	
	Maximum for any 1 day	Monthly average	Maximum for any 1 day	Annual average
	kg/kkg (or pounds per 1000 lb) of product			
AOX	<ML [a]	(b)	<ML [a]	(b)
COD	(c)	(c)	(c)	(c)

[a] "<ML" means less than the minimum level specified in § 430.01(i) for the particular pollutant.
[b] This regulation does not specify this type of limitation for this pollutant; however, permitting authorities may do so as appropriate.
[c] [Reserved].

(3)(i) The following effluent limitations apply to all dischargers in the specialty grade pulp segment:

SUBPART E—PRODUCTION OF SPECIALTY GRADE SULFITE PULPS

Pollutant or pollutant property	BAT effluent limitations	
	Maximum for any 1 day	Monthly Average
TCDD [a]	<ML [b]	(c)
TCDF [a]	<ML [b]	(c)
Chloroform [a]	(d)	(c)
Trichlorosyringol [a]	<ML [b]	(c)
3,4,5-trichlorocatechol [a]	<ML [b]	(c)
3,4,6-trichlorocatechol [a]	<ML [b]	(c)
3,4,5-trichloroguaiacol [a]	<ML [b]	(c)
3,4,6-trichloroguaiacol [a]	<ML [b]	(c)
4,5,6-trichloroguaiacol [a]	<ML [b]	(c)
2,4,5-trichlorophenol [a]	<ML [b]	(c)
2,4,6-trichlorophenol [a]	<ML [b]	(c)
Tetrachlorocatechol [a]	<ML [b]	(c)
Tetrachloroguaiacol [a]	<ML [b]	(c)
2,3,4,6-tetrachlorophenol [a]	<ML [b]	(c)
Pentachlorophenol [a]	<ML [b]	(c)

	Continuous dischargers		Non-continuous dischargers	
	Maximum for any 1 day	Monthly average	Maximum for any 1 day	Annual average
	kg/kkg (or pounds per 1,000 lb) of product			
AOX	(d)	(d)	(d)	(d)
COD	(d)	(d)	(d)	(d)

[a] These limitations do not apply with respect to fiber lines that use a TCF bleaching process as disclosed by the discharger in its permit application under 40 CFR 122.21(g)(3) and certified under 40 CFR 122.22.
[b] "<ML" means less than the minimum level specified in § 430.01(i) for the particular pollutant.
[c] This regulation does not specify this type of limitation for this pollutant; however, permitting authorities may do so as appropriate.

[d] [Reserved].

(ii) The following effluent limitations apply to dischargers in the specialty grade pulp segment with respect to each fiber line that uses exclusively TCF bleaching processes, as disclosed by the discharger in its NPDES permit application under 40 CFR 122.21(g)(3) and certified under 40 CFR 122.22:

SUBPART E—PRODUCTION OF SPECIALTY GRADE PULPS

Pollutant or pollutant property	BAT effluent limitations (TCF)			
	Continuous dischargers		Non-continuous dischargers	
	Maximum for any 1 day	Monthly average	Maximum for any 1 day	Annual average
	kg/kkg (or pounds per 1000 lb) of product			
AOX	<ML [a]	([b])	<ML [a]	([b])
COD	([c])	([c])	([c])	([c])

[a] "<ML" means less than the minimum level specified in § 430.01(i) for the particular pollutant.
[b] This regulation does not specify this type of limitation for this pollutant; however, permitting authorities may do so as appropriate.
[c] [Reserved].

(b) The following additional effluent limitations apply to each discharger subject to this section in accordance with the previous subcatgorization scheme unless it certifies to the permitting authority that it is not using these compounds as biocides. Also, for non-continuous dischargers, concentration limitations (mg/l) shall apply. Concentration limitations will only apply to non-continuous dischargers:

SUBPART E

[Supplemental BAT effluent limitations]

Pollutant or pollutant property	Maximum for any 1 day	
	kg/kkg (or pounds per 1,000 lb) of product	Milligrams/liter
Pentachlorophenol	0.00058exp(0.017x)	((0.011)(12.67)exp(0.017x))/y
Trichlorophenol	0.0036exp(0.017x)	((0.068)(12.67)exp(0.017x))/y
x = percent sulfite pulp in final product.		
y = wastewater discharged in kgal per ton of product.		

(c) Pursuant to 40 CFR 122.44(i) and 122.45(h), a discharger must demonstrate compliance with the limitations in paragraphs (a)(2) or (a)(3) of this section, as applicable, by monitoring for all pollutants (except for AOX and COD) at the point where the wastewater containing those pollutants leaves the bleach plant. The permitting authority may impose effluent limitations and/or monitoring requirements on internal wastestreams for any other pollutants covered in this section as appropriate under 40 CFR 122.44(i) and 122.45(h).

§ 430.55 New source performance standards (NSPS).

New sources subject to this subpart must achieve the following new source performance standards (NSPS), as applicable.

(a) The following standards apply to each new source regardless of when it commenced discharge:

SUBPART E

[1982 NSPS]

Pollutant or pollutant property	Kg/kkg (or pounds per 1,000 lb) of product		
	Continuous dischargers		Non-continuous dischargers (annual average)
	Maximum for any 1 day	Average of daily values for 30 consecutive days	
BOD5	4.38exp(0.017x)	2.36exp(0.017x)	Average of daily values for 30 consecutive days divided by 1.91.
TSS	5.81exp(0.017x)	3.03exp(0.017x)	Average of daily values for 30 consecutive days divided by 1.90.
pH	([1])	([1])	([1])
x = percent sulfite pulp in final product.			

[1] Within the range of 5.0 to 9.0 at all times.

(b) The following standards apply with respect to each new source fiber line that commences discharge after June 15, 1998.

(1) The following standards apply to all new sources in the calcium-, magnesium-, or sodium-based sulfite pulp segment:

SUBPART E

[Production of Calcium-, Magnesium-, or Sodium-based Sulfite Pulps]

Pollutant or pollutant property	NSPS			
	Continuous dischargers		Non-continuous dischargers	
	Maximum for any 1 day	Monthly average	Maximum for any 1 day	Annual average
	kg/kkg (or pounds per 1,000 lb) of product			
AOX	<ML [a]	([b])	<ML [a]	([b])
COD	([c])	([c])	([c])	([c])

[a] "<ML" means less than the minimum level specified in § 430.01(i) for the particular pollutant.
[b] This regulation does not specify this type of limitation for this pollutant; however, permitting authorities may do so as appropriate.
[c] [Reserved].

(2)(i) The following standards apply to all new sources in the ammonium-based sulfite pulp segment:

SUBPART E—PRODUCTION OF AMMONIUM-BASED SULFITE PULPS

Pollutant or pollutant property	NSPS	
	Maximum for any 1 day	Monthly average
TCDD [a]	<ML [b]	([c])
TCDF [a]	<ML [b]	([c])
Chloroform [a]	([d])	([d])
Trichlorosyringol [a]	<ML [b]	([c])
3,4,5-trichlorocatechol [a]	<ML [b]	([c])
3,4,6-trichlorocatechol [a]	<ML [b]	([c])
3,4,5-trichloroguaiacol [a]	<ML [b]	([c])
3,4,6-trichloroguaiacol [a]	<ML [b]	([c])
4,5,6-trichloroguaiacol [a]	<ML [b]	([c])
2,4,5-trichlorophenol [a]	<ML [b]	([c])
2,4,6-trichlorophenol [a]	<ML [b]	([c])
Tetrachlorocatechol [a]	<ML [b]	([c])
Tetrachloroguaiacol [a]	<ML [b]	([c])
2,3,4,6-tetrachlorophenol [a]	<ML [b]	([c])
Pentachlorophenol [a]	<ML [b]	([c])

	Continuous dischargers		Non-continuous dischargers	
	Maximum for any 1 day	Monthly average	Maximum for any 1 day	Annual average
	kg/kkg (or pounds per 1,000 lb) of product			
AOX	([d])	([d])	([d])	([d])
COD	([d])	([d])	([d])	([d])

[a] These limitations do not apply with respect to fiber lines that use a TCF bleaching process as disclosed by the discharger in its permit application under 40 CFR 122.21(g)(3) and certified under 40 CFR 122.22.
[b] "<ML" means less than the minimum level specified in § 430.01(i) for the particular pollutant.
[c] This regulation does not specify this type of limitation for this pollutant; however, permitting authorities may do so as appropriate.
[d] [Reserved].

(ii) The following standards apply to all new sources in the ammonium-based sulfite pulp segment with respect to each fiber line that uses exclusively TCF bleaching processes, as disclosed by the discharger in its NPDES permit application under 40 CFR 122.21(g)(3) and certified under 40 CFR 122.22:

SUBPART E—PRODUCTION OF AMMONIUM-BASED SULFITE PULPS

Pollutant or pollutant property	NSPS (TCF)			
	Continuous dischargers		Non-continuous dischargers	
	Maximum for any 1 day	Monthly average	Maximum for any 1 day	Annual average
	kg/kkg (or pounds per 1000 lb) of product			
AOX	<ML [a]	([b])	<ML [a]	([b])

SUBPART E—PRODUCTION OF AMMONIUM-BASED SULFITE PULPS—Continued

Pollutant or pollutant property	NSPS (TCF)			
	Continuous dischargers		Non-continuous dischargers	
	Maximum for any 1 day	Monthly average	Maximum for any 1 day	Annual average
COD	(c)	(c)	(c)	(c)

[a] "<ML" means less than the minimum level specified in § 430.01(i) for the particular pollutant.
[b] This regulation does not specify this type of limitation for this pollutant; however, permitting authorities may do so as appropriate.
[c] [Reserved].

(3)(i) The following standards apply to all new sources in the specialty grade sulfite pulp segment:

SUBPART E—PRODUCTION OF SPECIALTY GRADE SULFITE PULPS

Pollutant or pollutant property	NSPS	
	Maximum for any 1 day	Monthly average
TCDD [a]	<ML [b]	(c)
TCDF [a]	<ML [b]	(c)
Chloroform [a]	(d)	(d)
Trichlorosyringol [a]	<ML [b]	(c)
3,4,5-trichlorocatechol [a]	<ML [b]	(c)
3,4,6-trichlorocatechol [a]	<ML [b]	(c)
3,4,5-trichloroguaiacol [a]	<ML [b]	(c)
3,4,6-trichloroguaiacol [a]	<ML [b]	(c)
4,5,6-trichloroguaiacol [a]	<ML [b]	(c)
2,4,5-trichlorophenol [a]	<ML [b]	(c)
2,4,6-trichlorophenol [a]	<ML [b]	(c)
Tetrachlorocatechol [a]	<ML [b]	(c)
Tetrachloroguaiacol	<ML [b]	(c)
2,3,4,6-tetrachlorophenol [a]	<ML [b]	(c)
Pentachlorophenol [a]	<ML [b]	(c)

	Continuous dischargers		Non-continuous dischargers	
	Maximum for any 1 day	Monthly average	Maximum for any 1 day	Annual average
	kg/kkg (or pounds per 1,000 lb) of product			
AOX	(d)	(d)	(d)	(d)
COD	(d)	(d)	(d)	(d)

[a] These limitations do not apply with respect to fiber lines that use a TCF bleaching process as disclosed by the discharger in its permit application under 40 CFR 122.21(g)(3) and certified under 40 CFR 122.22.
[b] "<ML" means less than the minimum level specified in § 430.01(i) for the particular pollutant.
[c] This regulation does not specify this type of limitation for this pollutant; however, permitting authorities may do so as appropriate.
[d] [Reserved].

(ii) The following standards apply to all new sources within the specialty grade sulfite pulp segment with respect to each fiber line that uses exclusively TCF bleaching processes, as disclosed by the discharger in its NPDES permit application under 40 CFR 122.21(g)(3) and certified under 40 CFR 122.22:

SUBPART E—PRODUCTION OF SPECIALTY GRADE SULFITE PULPS

Pollutant or pollutant property	NSPS (TCF)			
	Continuous dischargers		Non-continuous dischargers	
	Maximum for any 1 day	Monthly average	Maximum for any 1 day	Annual average
	kg/kkg (or pounds per 1000 lb) of product			
AOX	<ML [a]	(b)	<ML [a]	(b)
COD	(c)	(c)	(c)	(c)

[a] "<ML" means less than the minimum level specified in § 430.01(i) for the particular pollutant.
[b] This regulation does not specify this type of limitation for this pollutant; however, permitting authorities may do so as appropriate.
[c] [Reserved].

(c) The following standards apply to each new source regardless of when it commenced discharge, unless it certifies to the permitting authority that it is not using these compounds as biocides. Also, for non-continuous dischargers, concentration limitations (mg/l) shall apply. Concentration limitations will only apply to non-continuous dischargers:

SUBPART E

[Supplemental NSPS]

Pollutant or pollutant property	Maximum for any 1 day	
	kg/kkg (or pounds per 1,000 lb) of product	Milligrams/liter
Pentachlorophenol	0.00058exp(0.017x)	((0.015)(9.12)exp(0.017x))/y
Trichlorophenol	0.0036exp(0.017x)	((0.094)(9.12)exp(0.017x))/y
x = percent sulfite pulp in final product.		
y = wastewater discharged in kgal per ton of product.		

(d) Pursuant to 40 CFR 122.44(i) and 122.45(h), a discharger must demonstrate compliance with the standards in paragraphs (b)(2) or (b)(3) of this section, as applicable, by monitoring for all pollutants (except for AOX, COD, BOD5, TSS, and pH) at the point where the wastewater containing those pollutants leaves the bleach plant. The permitting authority may impose effluent limitations and/or monitoring requirements on internal wastestreams for any other pollutants covered in this section as appropriate under 40 CFR 122.44(i) and 122.45(h).

§ 430.56 Pretreatment standards for existing sources (PSES).

Except as provided in 40 CFR 403.7 and 403.13, any existing source subject to this subpart that introduces pollutants into a publicly owned treatment works must: comply with 40 CFR part 403; and achieve the following pretreatment standards for existing sources (PSES).

(a) The following pretreatment standards must be attained on or before April 16, 2001.

(1) The following pretreatment standards apply to all indirect dischargers in the calcium-, magnesium-, or sodium-based sulfite pulp segment:

SUBPART E

[Production of Calcium-, Magnesium-, or Sodium-based Sulfite Pulps]

Pollutant or pollutant property	PSES	
	Maximum for any 1 day	Monthly average
	kg/kkg (or pounds per 1,000 lb) of product	
AOX	>ML [a]	([b])

[a] "<ML" means less than the minimum level specified in § 430.01(i) for the particular pollutant.
[b] This regulation does not specify this type of limitation for this pollutant; however, pretreatment control authorities may do so as appropriate.

(2)(i) The following pretreatment standards apply to all indirect dischargers in the ammonium-based sulfite pulp segment:

SUBPART E—PRODUCTION OF AMMONIUM-BASED SULFITE PULPS

Pollutant or pollutant property	PSES	
	Maximum for any 1 day	Monthly average
TCDD [a]	<ML [b]	([c])
TCDF [a]	<ML [b]	([c])
Trichlorosyringol [a]	<ML [b]	([c])
3,4,5-trichlorocatechol [a]	<ML [b]	([c])
3,4,6-trichlorocatechol [a]	<ML [b]	([c])
3,4,5-trichloroguaiacol [a]	<ML [b]	([c])
3,4,6-trichloroguaiacol [a]	<ML [b]	([c])
4,5,6-trichloroguaiacol [a]	<ML [b]	([c])
2,4,5-trichlorophenol [a]	<ML [b]	([c])
2,4,6-trichlorophenol [a]	<ML [b]	([c])
Tetrachlorocatechol [a]	<ML [b]	([c])
Tetrachloroguaiacol [a]	<ML [b]	([c])
2,3,4,6-tetrachlorophenol [a]	<ML [b]	([c])
Pentachlorophenol [a]	<ML [b]	([c])

[a] These limitations do not apply with respect to fiber lines operated by any indirect discharger that discloses to the pretreatment control authority, at the time it submits the report required under 40 CFR 403.12(b), (d), or (e), that it uses a TCF bleaching process at that fiber line.
[b] "<ML" means less than the minimum level specified in § 430.01(i) for the particular pollutant.
[c] This regulation does not specify this type of limitation for this pollutant; however, pretreatment control authorities may do so as appropriate.

(ii) The following pretreatment standards apply with respect to each new source fiber line operated by an indirect discharger producing ammonium-based sulfite pulps if the indirect discharger discloses to the pretreatment control authority in a report submitted under 40 CFR 403.12(b) that it uses exclusively TCF bleaching processes at that fiber line:

SUBPART E—PRODUCTION OF AMMONIUM-BASED SULFITE PULPS

Pollutant or pollutant parameter	PSNS (TCF)	
	Maximum for any 1 day	Monthly average
AOX	<ML [a]	([b])

[a] "<ML" means less than the minimum level specified in § 430.01(i) for the particular pollutant.
[b] This regulation does not specify this type of limitation for this pollutant; however, pretreatment control authorities may do so as appropriate.

(3)(i) The following pretreatment standards apply to all indirect dischargers in the specialty grade sulfite pulp segment:

SUBPART E—PRODUCTION OF SPECIALTY GRADE SULFITE PULPS

Pollutant or pollutant property	PSES	
	Maximum for any 1 day	Monthly average
TCDD [a]	<ML [b]	([c])
TCDF [a]	<ML [b]	([c])
Trichlorosyringol [a]	<ML [b]	([c])
3,4,5-trichlorocatechol [a]	<ML [b]	([c])
3,4,6-trichlorocatechol [a]	<ML [b]	([c])
3,4,5-trichloroguaiacol [a]	<ML [b]	([c])
3,4,6-trichloroguaiacol [a]	<ML [b]	([c])
4,5,6-trichloroguaiacol [a]	<ML [b]	([c])
2,4,5-trichlorophenol [a]	<ML [b]	([c])
2,4,6-Trichlorophenol [a]	<ML [b]	([c])
Tetrachlorocatechol [a]	<ML [b]	([c])
Tetrachloroguaiacol [a]	<ML [b]	([c])
2,3,4,6-tetrachlorophenol [a]	<ML [b]	([c])
Pentachlorophenol [a]	<ML [b]	([c])

[a] These limitations do not apply with respect to fiber lines operated by any indirect discharger that discloses to the pretreatment control authority, at the time it submits the report required under 40 CFR 403.12(b), (d), or (e), that it uses a TCF bleaching process at that fiber line.
[b] "<ML" means less than the minimum level specified in § 430.01(i) for the particular pollutant.
[c] This regulation does not specify this type of limitation for this pollutant; however, pretreatment control authorities may do so as appropriate.

(ii) The following pretreatment standards apply with respect to each fiber line operated by an indirect discharger producing specialty grade sulfite pulps if the indirect discharger discloses to the pretreatment control authority in a report submitted under 40 CFR 403.12(b) that it uses exclusively TCF bleaching processes at that fiber line. These pretreatment standards must be attained on or before April 16, 2001:

SUBPART E

Pollutant or pollutant parameter	PSES (TCF)	
	Maximum for any 1 day	Monthly average
AOX	<ML [a]	([b])

[a] "<ML" means less than the minimum level specified in § 430.01(i) for the particular pollutant.
[b] This regulation does not specify this type of limitation for this pollutant; however, pretreatment control authorities may do so as appropriate.

(b) The following pretreatment standards apply to each indirect discharger, in accordance with the previous subcategorization scheme, unless it certifies to the pretreatment control authority that it is not using these compounds as biocides. In cases when POTWs find it necessary to impose mass effluent limitations, equivalent mass limitations are provided as guidance:

SUBPART E

Pollutant or pollutant property	Supplemental PSES	
	Maximum for any 1 day	
	kg/kkg (or pounds per 1,000 lb) of product	Milligrams/liter
Pentachlorophenol	0.00058exp(0.017x)	((0.011)(12.67)exp(0.017x))/y

SUBPART E—Continued

Pollutant or pollutant property	Supplemental PSES	
	Maximum for any 1 day	
	kg/kkg (or pounds per 1,000 lb) of product	Milligrams/liter
Trichlorophenol x = percent sulfite pulp in final product. y = wastewater discharged in kgal per ton of product.	0.0043exp(0.017x)	((0.082)(12.67)exp(0.017x))/y

(c) An indirect discharger must demonstrate compliance with the pretreatment standards in paragraphs (a)(2) or (a)(3) of this section, as applicable, by monitoring for all pollutants at the point where the wastewater containing those pollutants leaves the bleach plant.

§ 430.57 Pretreatment standards for new sources (PSNS).

Except as provided in 40 CFR 403.7, any new source subject to this subpart that introduces pollutants into a publicly owned treatment works must: comply with 40 CFR part 403; and achieve the following pretreatment standards for new sources (PSNS).

(a) (1) The following pretreatment standards apply to each indirect discharger in the calcium-, magnesium-, or sodium-based sulfite pulp segment that is a new source:

SUBPART E

[Production of Calcium-, Magnesium-, or Sodium-Based Sulfite Pulps]

Pollutant or pollutant property	PSNS	
	Maximum for any 1 day	Monthly average
	kg/kkg (or pounds per 1,000 lb) of product	
AOX	<ML [a]	([b])

[a] "<ML" means less than the minimum level specified in § 430.01(i) for the particular pollutant.
[b] This regulation does not specify this type of limitation for this pollutant; however, pretreatment control authorities may do so as appropriate.

(2)(i) The following standards apply to each indirect discharger in the ammonium-based sulfite pulp segment that is a new source:

SUBPART E.—PRODUCTION OF AMMONIUM-BASED SULFITE PULPS

Pollutant or pollutant property	PSNS	
	Maximum for any 1 day	Monthly average
TCDD [a]	<ML [b]	([c])
TCDF [a]	<ML [b]	([c])
Trichlorosyringol [a]	<ML [b]	([c])
3,4,5-trichlorocatechol [a]	<ML [b]	([c])
3,4,6-trichlorocatechol [a]	<ML [b]	([c])
3,4,5-trichloroguaiacol [a]	<ML [b]	([c])
3,4,6-trichloroguaiacol [a]	<ML [b]	([c])
4,5,6-trichloroguaiacol [a]	<ML [b]	([c])
2,4,5-trichlorophenol [a]	<ML [b]	([c])
2,4,6-trichlorophenol [a]	<ML [b]	([c])
Tetrachlorocatechol [a]	<ML [b]	([c])
Tetrachloroguaiacol [a]	<ML [b]	([c])
2,3,4,6-tetrachlorophenol [a]	<ML [b]	([c])
Pentachlorophenol [a]	<ML [b]	([c])

[a] These limitations do not apply with respect to fiber lines operated by any indirect discharger that discloses to the pretreatment control authority, at the time it submits the report required under 40 CFR 403.12 (b), (d), or (e), that it uses a TCF bleaching process at that fiber line.
[b] "<ML" means less than the minimum level specified in § 430.01(i) for the particular pollutant.
[c] This regulation does not specify this type of limitation for this pollutant; however, pretreatment control authorities may do so as appropriate.

(ii) The following pretreatment standards apply with respect to each new source fiber line operated by an indirect discharger producing ammonium-based sulfite pulps if the indirect discharger discloses to the pretreatment control authority in a report submitted under 40 CFR 403.12(b) that it uses exclusively TCF bleaching processes at that fiber line:

SUBPART E.—PRODUCTION OF AMMONIUM-BASED SULFITE PULPS

Pollutant or pollutant parameter	PSNS (TCF)	
	Maximum for any 1 day	Monthly average
AOX	<ML [a]	([b])

[a] "<ML" means less than the minimum level specified in § 430.01(i) for the particular pollutant.
[b] This regulation does not specify this type of limitation for this pollutant; however, pretreatment control authorities may do so as appropriate.

(3)(i) The following pretreatment standards apply to each indirect discharger in the specialty grade sulfite pulp segment that is a new source:

SUBPART E.—PRODUCTION OF SPECIALTY GRADE SULFITE PULPS

Pollutant or pollutant property	PSNS	
	Maximum for any 1 day	Monthly average
TCDD [a]	<ML [b]	([c])
TCDF [a]	<ML [b]	([c])
Trichlorosyringol [a]	<ML [b]	([c])
3,4,5-trichlorocatechol [a]	<ML [b]	([c])
3,4,6-trichlorocatechol [a]	<ML [b]	([c])
3,4,5-trichloroguaiacol [a]	<ML [b]	([c])
3,4,6-trichloroguaiacol [a]	<ML [b]	([c])
4,5,6-trichloroguaiacol [a]	<ML [b]	([c])
2,4,5-trichlorophenol [a]	<ML [b]	([c])
2,4,6-trichlorophenol [a]	<ML [b]	([c])
Tetrachlorocatechol [a]	<ML [b]	([c])
Tetrachloroguaiacol [a]	<ML [b]	([c])
2,3,4,6-tetrachlorophenol [a]	<ML [b]	([c])
Pentachlorophenol [a]	<ML [b]	([c])

[a] These limitations do not apply with respect to fiber lines operated by any indirect discharger that discloses to the pretreatment control authority, at the time it submits the report required under 40 CFR 403.12 (b), (d), or (e), that it uses a TCF bleaching process at that fiber line.
[b] "<ML" means less than the minimum level specified in § 430.01(i) for the particular pollutant.
[c] This regulation does not specify this type of limitation for this pollutant; however, pretreatment control authorities may do so as appropriate.

(ii) The following pretreatment standards apply with respect to each new source fiber line operated by an indirect discharger producing specialty grade sulfite pulps if the indirect discharger discloses to the pretreatment control authority in a report submitted under 40 CFR 403.12(b) that it uses exclusively TCF bleaching processes at that fiber line:

SUBPART E.—PRODUCTION OF SPECIALTY GRADE SULFITE PULPS

Pollutant or pollutant parameter	PSNS (TCF)	
	Maximum for any 1 day	Monthly average
AOX	<ML [a]	([b])

[a] "<ML" means less than the minimum level specified in § 430.01(i) for the particular pollutant.
[b] This regulation does not specify this type of limitation for this pollutant; however, pretreatment control authorities may do so as appropriate.

(b) The following pretreatment standards shall apply to each new source indirect dischargers unless the indirect discharger certifies to the pretreatment control authority that it is not using these compounds as biocides. In cases when POTWs find it necessary to impose mass effluent standards, equivalent mass standards are provided as guidance:

SUBPART E

Pollutant or pollutant property	Supplemental PSNS	
	Maximum for any 1 day	
	kg/kkg (or pounds per 1,000 lb) of product	Milligrams/liter
Pentachlorophenol	0.00058exp (0.017x).	((0.015)(9.12)exp(0.017x))/y
Trichlorophenol	0.0043exp (0.017x).	((0.114)(9.12)exp(0.017x))/y
x = percent sulfite pulp in final product. y = wastewater discharged in kgal per ton of product.		

(c) An indirect discharger must demonstrate compliance with the pretreatment standards in paragraphs (a)(2) or (a)(3) of this section, as applicable, by monitoring for all pollutants at the point where the wastewater containing those pollutants leaves the bleach plant.

§ 430.58 Best management practices (BMPs).

The definitions and requirements set forth in 40 CFR 430.03 apply to facilities in this subpart.

Subpart F—Semi-Chemical Subcategory

§ 430.60 Applicability; description of the semi-chemical subcategory.

The provisions of this subpart are applicable to discharges resulting from the integrated production of pulp and paper at semi-chemical mills.

§ 430.61 Specialized definitions.

For the purpose of this subpart, the general definitions, abbreviations, and methods of analysis set forth in 40 CFR part 401 and § 430.01 of this part shall apply to this subpart.

§ 430.62 Effluent limitations representing the degree of effluent reduction attainable by the application of the best practicable control technology currently available (BPT).

Except as provided in 40 CFR 125.30 through 125.32, any existing point source subject to this subpart must achieve the following effluent limitations representing the degree of effluent reduction attainable by the application of the best practicable control technology currently available (BPT):

SUBPART F

[BPT effluent limitations for ammonia base mills]

Pollutant or pollutant property	Kg/kkg (or pounds per 1,000 lb) of product	
	Maximum for any 1 day	Average of daily values for 30 consecutive days
BOD5	8.0	4.0
TSS	10.0	5.0
pH	(1)	(1)

1 Within the range of 6.0 to 9.0 at all times.

SUBPART F

[BPT effluent limitations for sodium base mills]

Pollutant or pollutant property	Kg/kkg (or pounds per 1,000 lb) of product	
	Maximum for any 1 day	Average of daily values for 30 consecutive days
BOD5	8.7	4.35
TSS	11.0	5.5
pH	(1)	(1)

1 Within the range of 6.0 to 9.0 at all times.

§ 430.63 Effluent limitations guidelines representing the degree of effluent reduction attainable by the application of the best conventional pollutant control technology (BCT).

Except as provided in 40 CFR 125.30 through 125.32, any existing point source subject to this subpart shall achieve the following effluent limitations representing the degree of effluent reduction attainable by the application of the best conventional pollutant control technology (BCT): The limitations shall be the same as those specified for conventional pollutants (which are defined in 40 CFR 401.16) in § 430.62 of this subpart for the best practicable control technology currently available (BPT), except that non-continuous dischargers shall not be subject to the maximum day and average-of-30-consecutive-days limitations, but shall be subject to annual average effluent limitations determined by dividing the average-of-30-consecutive-days limitations for BOD5 by 1.36 and TSS by 1.36.

§ 430.64 Effluent limitations representing the degree of effluent reduction attainable by the application of the best available technology economically achievable (BAT).

Except as provided in 40 CFR 125.30 through 125.32, any existing point source subject to this subpart where chlorophenolic-containing biocides are used must achieve the following effluent limitations representing the degree of effluent reduction attainable by the application of the best available technology economically achievable (BAT). Non-continuous dischargers shall not be subject to the maximum day mass limitations in kg/kkg (lb/1,000 lb), but shall be subject to concentration limitations. Concentration limitations are only applicable to non-continuous dischargers. Permittees not using chlorophenolic-containing biocides must certify to the permit-issuing authority that they are not using these biocides:

SUBPART F

Pollutant or pollutant property	BAT effluent limitations	
	Maximum for any 1 day	
	Kg/kkg (or pounds per 1,000 lb) of product	Milligrams/liter
Pentachlorophenol	0.0012	(0.029)(10.3)/y
Trichlorophenol	0.00043	(0.010)(10.3)/y
y = wastewater discharged in kgal per ton of product.		

§ 430.65 New source performance standards (NSPS).

Any new source subject to this subpart must achieve the following new source performance standards (NSPS), except that non-continuous dischargers shall not be subject to the maximum day and average of 30 consecutive days effluent limitations for BOD5 and TSS, but shall be subject to annual average effluent limitations. Also, for non-continuous dischargers, concentration limitations (mg/l) shall apply, where provided. Concentration limitations will only apply to non-continuous dischargers. Only facilities where chlorophenolic-containing biocides are used shall be subject to pentachlorophenol and trichlorophenol limitations. Permittees not using chlorophenolic-containing biocides must certify to the permit-issuing authority that they are not using these biocides:

SUBPART F

[NSPS]

Pollutant or pollutant property	Kg/kkg (or pounds per 1,000 lb) of product		
	Continuous dischargers		Non-continuous dischargers (annual average)
	Maximum for any 1 day	Average of daily values for 30 consecutive days	
BOD5	3.0	1.6	0.84
TSS	5.8	3.0	1.6
pH	(1)	(1)	(1)

	Maximum for any 1 day	
	Kg/kkg (or pounds per 1,000 lb) of product	Milligrams/liter
Pentachlorophenol	0.0012	(0.041)(7.3)/y
Trichlorophenol	0.00043	(0.014)(7.3)/y
y = wastewater discharged in kgal per ton at all times.		

[1] Within the range of 5.0 to 9.0 at all times.

§ 430.66 Pretreatment standards for existing sources (PSES).

Except as provided in 40 CFR 403.7 and 403.13, any existing source subject to this subpart that introduces pollutants into a publicly owned treatment works must: comply with 40 CFR part 403; and achieve the following pretreatment standards for existing sources (PSES) if it uses chlorophenolic-containing biocides. Permittees not using chlorophenolic-containing biocides must certify to the permit-issuing authority that they are not using these biocides. PSES must be attained on or before July 1, 1984:

SUBPART F

Pollutant or pollutant property	PSES	
	Maximum for any 1 day	
	Milligrams/liter	Kg/kkg (or pounds per 1,000 lb) of product[a]
Pentachlorophenol	(0.032)(10.3)/y	0.0014

SUBPART F—Continued

Pollutant or pollutant property	PSES	
	Maximum for any 1 day	
	Milligrams/liter	Kg/kkg (or pounds per 1,000 lb) of product[a]
Trichlorophenol	(0.010)(10.3)/y	0.00043
y = wastewater discharged in kgal per ton of product.		

[a] The following equivalent mass limitations are provided as guidance in cases when POTWs find it necessary to impose mass equivalent limitations.

§ 430.67 Pretreatment standards for new sources (PSNS).

Except as provided in 40 CFR 403.7, any new source subject to this subpart that introduces pollutants into a publicly owned treatment works must: comply with 40 CFR part 403; and achieve the following pretreatment standards for new sources (PSNS) if it uses chlorophenolic-containing biocides. Permittees not using chlorophenolic-containing biocides must certify to the permit-issuing authority that they are not using these biocides:

SUBPART F

Pollutant or pollutant property	PSNS	
	Maximum for any 1 day	
	Milligrams/liter	Kg/kkg (or pounds per 1,000 lb) of product[a]
Pentachlorophenol	(0.045)(7.3)/y	0.0014
Trichlorophenol	(0.014)(7.3)/y	0.00043
y = wastewater discharged in kgal per ton of product.		

[a] The following equivalent mass limitations are provided as guidance in cases when POTWs find it necessary to impose mass equivalent limitations.

Subpart G—Mechanical Pulp Subcategory

§ 430.70 Applicability; description of the mechanical pulp subcategory.

The provisions of this subpart are applicable to discharges resulting from: the production of pulp and paper at groundwood chemi-mechanical mills; the production of pulp and paper at groundwood mills through the application of the thermo-mechanical process; the integrated production of pulp and coarse paper, molded pulp products, and newsprint at groundwood mills; and the integrated production of pulp and fine paper at groundwood mills.

§ 430.71 Specialized definitions.

For the purpose of this subpart, the general definitions, abbreviations, and methods of analysis set forth in 40 CFR part 401 and § 430.01 of this part shall apply to this subpart.

§ 430.72 Effluent limitations representing the degree of effluent reduction attainable by the application of the best practicable control technology currently available (BPT).

(a) Except as provided in 40 CFR 125.30 through 125.32, any existing point source subject to this subpart must achieve the following effluent limitations representing the degree of effluent reduction attainable by the application of the best practicable control technology currently available (BPT), except that non-continuous dischargers shall not be subject to the maximum day and average of 30 consecutive days limitations but shall be subject to annual average effluent limitations:

SUBPART G

[BPT effluent limitations for mechanical pulp facilities where pulp and paper at groundwood chemi-mechanical mills are produced]

Pollutant or pollutant property	Kg/kkg (or pounds per 1,000 lb) of product		
	Continuous dischargers		Non-continuous dischargers (annual average)
	Maximum for any 1 day	Average of daily values for 30 consecutive days	
BOD5	13.5	7.05	3.96
TSS	19.75	10.65	5.85

SUBPART G—Continued

[BPT effluent limitations for mechanical pulp facilities where pulp and paper at groundwood chemi-mechanical mills are produced]

Pollutant or pollutant property	Kg/kkg (or pounds per 1,000 lb) of product		
	Continuous dischargers		Non-continuous dischargers (annual average)
	Maximum for any 1 day	Average of daily values for 30 consecutive days	
pH	(1)	(1)	(1)

1 Within the range of 5.0 to 9.0 at all times.

SUBPART G

[BPT effluent limitations for mechanical pulp facilities where pulp and paper at groundwood mills are produced through the application of the thermo-mechanical process]

Pollutant or pollutant property	Kg/kkg (or pounds per 1,000 lb) of product		
	Continuous dischargers		Non-continuous dischargers (annual average)
	Maximum for any 1 day	Average of daily values for 30 consecutive days	
BOD5	10.6	5.55	3.12
TSS	15.55	8.35	4.59
pH	(1)	(1)	(1)

1 Within the range of 5.0 to 9.0 at all times.

SUBPART G

[BPT effluent limitations for mechanical pulp facilities where the integrated production of pulp and coarse paper, molded pulp products, and newsprint at groundwood mills occurs]

Pollutant or pollutant property	Kg/kkg (or pounds per 1,000 lb) of product		
	Continuous dischargers		Non-continuous dischargers (annual average)
	Maximum for any 1 day	Average of daily values for 30 consecutive days	
BOD5	7.45	3.9	2.19
TSS	12.75	6.85	3.76
pH	(1)	(1)	(1)

1 Within the range of 5.0 to 9.0 at all times.

SUBPART G

[BPT effluent limitations for mechanical pulp facilities where the integrated production of pulp and fine paper at groundwood mills occurs]

Pollutant or pollutant property	Kg/kkg (or pounds per 1,000 lb) of product		
	Continuous dischargers		Non-continuous dischargers (annual average)
	Maximum for any 1 day	Average of daily values for 30 consecutive days	
BOD5	6.85	3.6	2.0
TSS	11.75	6.3	3.5
pH	(1)	(1)	(1)

1 Within the range of 5.0 to 9.0 at all times.

(b) The following limitations establish the quantity or quality of pollutants or pollutant properties, controlled by this section, resulting from the use of wet barking operations, which may be discharged by a point source subject to the provisions of this subpart. These limitations are in addition to the limitations set forth in paragraph (a) of this section and shall be calculated using the proportion of the mill's total production due to use of logs which are subject to such operations. Non-continuous dischargers shall not be subject to the maximum day and average of 30 consecutive days limitations, but shall be subject to annual average effluent limitations:

SUBPART G

[BPT effluent limitations for mechanical pulp facilities where pulp and paper at groundwood chemi-mechanical mills are produced]

Pollutant or pollutant property	Kg/kkg (or pounds per 1,000 lb) of product		
	Continuous dischargers		Non-continuous dischargers (annual average)
	Maximum for any 1 day	Average of daily values for 30 consecutive days	
BOD5	0.9	0.45	0.25
TSS	2.6	1.45	0.80
pH	(1)	(1)	(1)

1 Within the range of 5.0 to 9.0 at all times.

SUBPART G

[BPT effluent limitations for mechanical pulp facilities where pulp and paper at groundwood mills are produced through the application of the thermo-mechanical process]

Pollutant or pollutant property	Kg/kkg (or pounds per 1,000 lb) of product		
	Continuous dischargers		Non-continuous dischargers (annual average)
	Maximum for any 1 day	Average of daily values for 30 consecutive days	
BOD5	0.9	0.45	0.3
TSS	2.7	1.45	0.75
pH	(1)	(1)	(1)

1 Within the range of 5.0 to 9.0 at all times.

SUBPART G

[BPT effluent limitations for mechanical pulp facilities where the integrated production of pulp and coarse paper, molded pulp products, and newsprint at groundwood mills occurs]

Pollutant or pollutant property	Kg/kkg (or pounds per 1,000 lb) of product		
	Continuous dischargers		Non-continuous dischargers (annual average)
	Maximum for any 1 day	Average of daily values for 30 consecutive days	
BOD5	1.15	0.55	0.30
TSS	2.0	1.1	0.60
pH	(1)	(1)	(1)

1 Within the range of 5.0 to 9.0 at all times.

SUBPART G

[BPT effluent limitations for mechanical pulp facilities where the integrated production of pulp and fine paper at groundwood mills occurs]

Pollutant or pollutant property	Kg/kkg (or pounds per 1,000 lb) of product		
	Continuous dischargers		Non-continuous dischargers (annual average)
	Maximum for any 1 day	Average of daily values for 30 consecutive days	
BOD5	1.1	0.55	0.35
TSS	1.95	1.1	0.60
pH	(1)	(1)	(1)

1 Within the range of 5.0 to 9.0 at all times.

(c) The following limitations establish the quantity or quality of pollutants or pollutant parameters, controlled by this section, resulting from the use of log washing or chip washing operations, which may be discharged by a point source subject to the provisions of this subpart. These limitations are in addition to the limitations set forth in paragraph (a) of this section and shall be calculated using the proportion of the mill's total production due to use of logs and/or chips which are subject to such operations. Non-continuous dischargers shall not be subject to the maximum day and average of 30 consecutive days limitations, but shall be subject to the annual average effluent limitations:

SUBPART G

[BPT effluent limitations for mechanical pulp facilities where pulp and paper at groundwood chemi-mechanical mills are produced]

Pollutant or pollutant property	Kg/kkg (or pounds per 1,000 lb) of product		
	Continuous dischargers		Non-continuous dischargers (annual average)
	Maximum for any 1 day	Average of daily values for 30 consecutive days	
BOD5	0.05	0.05	0.05
TSS	0.25	0.15	0.10
pH	(1)	(1)	(1)

1 Within the range of 5.0 to 9.0 at all times.

SUBPART G

[BPT effluent limitations for mechanical pulp facilities where pulp and paper at groundwood mills are produced through the application of the thermo-mechanical process]

Pollutant or pollutant property	Kg/kkg (or pounds per 1,000 lb) of product		
	Continuous dischargers		Non-continuous dischargers (annual average)
	Maximum for any 1 day	Average of daily values for 30 consecutive days	
BOD5	0.05	0.05	0.05
TSS	0.30	0.15	0.05
pH	(1)	(1)	(1)

1 Within the range of 5.0 to 9.0 at all times.

SUBPART G

[BPT effluent limitations for mechanical pulp facilities where the integrated production of pulp and coarse paper, molded pulp products, and newsprint at groundwood mills occurs]

Pollutant or pollutant property	Kg/kkg (or pounds per 1,000 lb) of product		
	Continuous dischargers		Non-continuous dischargers (annual average)
	Maximum for any 1 day	Average of daily values for 30 consecutive days	
BOD5	0.15	0.05	0.05
TSS	0.20	0.15	0.10
pH	(1)	(1)	(1)

1 Within the range of 5.0 to 9.0 at all times.

SUBPART G

[BPT effluent limitations for mechanical pulp facilities where the integrated production of pulp and fine paper at groundwood mills occurs]

Pollutant or pollutant property	Kg/kkg (or pounds per 1,000 lb) of product		
	Continuous dischargers		Non-continuous dischargers (annual average)
	Maximum for any 1 day	Average of daily values for 30 consecutive days	
BOD5	0.15	0.05	0.05
TSS	0.2	0.15	0.10
pH	(1)	(1)	(1)

1 Within the range of 5.0 to 9.0 at all times.

(d) The following limitations establish the quantity or quality of pollutants or pollutant properties, controlled by this section, resulting from the use of log flumes or log ponds, which may be discharged by a point source subject to the provisions of this subpart. These limitations are in addition to the limitations set forth in paragraph (a) of this section and shall be calculated using the proportion of the mill's total production due to use of logs which are subject to such operations. Non-continuous dischargers shall not be subject to the maximum day and average of 30 consecutive days limitations but shall be subject to the annual average effluent limitations:

SUBPART G

[BPT effluent limitations for mechanical pulp facilities where pulp and paper at groundwood chemi-mechanical mills are produced]

Pollutant or pollutant property	Kg/kkg (or pounds per 1,000 lb) of product		
	Continuous dischargers		Non-continuous dischargers (annual average)
	Maximum for any 1 day	Average of daily values for 30 consecutive days	
BOD5	0.15	0.05	0.05
TSS	0.55	0.3	0.15
pH	(1)	(1)	(1)

1 Within the range of 5.0 to 9.0 at all times.

SUBPART G

[BPT effluent limitations for mechanical pulp facilities where pulp and paper at groundwood mills are produced through the application of the thermo-mechanical process]

Pollutant or pollutant property	Kg/kkg (or pounds per 1,000 lb) of product		
	Continuous dischargers		Non-continuous dischargers (annual average)
	Maximum for any 1 day	Average of daily values for 30 consecutive days	
BOD5	0.15	0.15	0.05
TSS	0.60	0.35	0.15
pH	(1)	(1)	(1)

1 Within the range of 5.0 to 9.0 at all times.

SUBPART G

[BPT effluent limitations for mechanical pulp facilities where the integrated production of pulp and coarse paper, molded pulp products, and newsprint at groundwood mills occurs]

Pollutant or pollutant property	Kg/kkg (or pounds per 1,000 lb) of product		
	Continuous dischargers		Non-continuous dischargers (annual average)
	Maximum for any 1 day	Average of daily values for 30 consecutive days	
BOD5	0.25	0.1	0.05
TSS	0.45	0.25	0.15
pH	(1)	(1)	(1)

1 Within the range of 5.0 to 9.0 at all times.

SUBPART G

[BPT effluent limitations for mechanical pulp facilities where the integrated production of pulp and fine paper at groundwood mills occurs]

Pollutant or pollutant property	Kg/kkg (or pounds per 1,000 lb) of product		
	Continuous dischargers		Non-continuous dischargers (annual average)
	Maximum for any 1 day	Average of daily values for 30 consecutive days	
BOD5	0.2	0.05	0.05
TSS	0.4	0.25	0.15
pH	(1)	(1)	(1)

1 Within the range of 5.0 to 9.0 at all times.

(e) For those mills using zinc hydrosulfite as a bleaching agent in the manufacturing process, the following effluent limitations are to be added to the base limitations set forth in paragraph (a) of this section. Permittees not using zinc hydrosulfite as a bleaching agent must certify to the permit issuing authority that they are not using this bleaching compound. Non-continuous dischargers shall not be subject to the maximum day and average of 30 consecutive days effluent limitations, but shall be subject to annual average effluent limitations:

SUBPART G

[BPT effluent limitations for mechanical pulp facilities where pulp and paper at groundwood chemi-mechanical mills are produced]

Pollutant or pollutant property	Kg/kkg (or pounds per 1,000 lb) of product		
	Continuous dischargers		Non-continuous dischargers (annual average)
	Maximum for any 1 day	Average of daily values for 30 consecutive days	
Zinc	0.34	0.17	0.11

SUBPART G

[BPT effluent limitations for mechanical pulp facilities where pulp and paper at groundwood mills are produced through the application of the thermo-mechanical process]

Pollutant or pollutant property	Kg/kkg (or pounds per 1,000 lb) of product		
	Continuous dischargers		Non-continuous dischargers (annual average)
	Maximum for any 1 day	Average of daily values for 30 consecutive days	
Zinc	0.26	0.13	0.09

SUBPART G

[BPT effluent limitations for mechanical pulp facilities where the integrated production of pulp and coarse paper, molded pulp products, and newsprint at groundwood mills occurs]

Pollutant or pollutant property	Kg/kkg (or pounds per 1,000 lb) of product		
	Continuous dischargers		Non-continuous dischargers (annual average)
	Maximum for any 1 day	Average of daily values for 30 consecutive days	
Zinc	0.30	0.15	0.10

SUBPART G

[BPT effluent limitations for mechanical pulp facilities where the integrated production of pulp and fine paper at groundwood mills occurs]

Pollutant or pollutant property	Kg/kkg (or pounds per 1,000 lb) of product		
	Continuous dischargers		Non-continuous dischargers (annual average)
	Maximum for any 1 day	Average of daily values for 30 consecutive days	
Zinc	0.275	0.135	0.090

§ 430.73 Effluent limitations guidelines representing the degree of effluent reduction attainable by the application of the best conventional pollutant control technology (BCT).

(a)(1) The following applies to: mechanical pulp facilities where the integrated production of pulp and coarse paper, molded pulp products, and newsprint at groundwood mills occurs; and mechanical pulp facilities where the integrated production of pulp and fine paper at groundwood mills occurs:

(2) Except as provided in 40 CFR 125.30 through 125.32, any existing point source subject to this subpart shall achieve the following effluent limitations representing the degree of effluent reduction attainable by the application of the best conventional

pollutant control technology (BCT): The limitations shall be the same as those specified for conventional pollutants (which are defined in 40 CFR 401.16) in § 430.72 of this subpart for the best practicable control technology currently available (BPT).

(b) [Reserved]

§ 430.74 Effluent limitations representing the degree of effluent reduction attainable by the application of the best available technology economically achievable (BAT).

(a) The following applies to mechanical pulp facilities where pulp and paper at groundwood mills are produced through the application of the thermo-mechanical process; mechanical pulp facilities where the integrated production of pulp and coarse paper, molded pulp products, and newsprint at groundwood mills occurs; and mechanical pulp facilities where the integrated production of pulp and fine paper at groundwood mills occurs: except as provided in 40 CFR 125.30 through 125.32, any existing point source subject to this subpart must achieve the following effluent limitations representing the degree of effluent reduction attainable by the application of the best available technology economically achievable (BAT), except that non-continuous dischargers shall not be subject to the maximum day mass limitations in kg/kkg (lb/1000 lb), but shall be subject to concentration limitations. Concentration limitations are only applicable to non-continuous dischargers. Pentachlorophenol and trichlorophenol limitations are only applicable at facilities where chlorophenolic-containing biocides are used. Permittees not using chlorophenolic-containing biocides must certify to the permit-issuing authority that they are not using these biocides. Zinc limitations are only applicable at facilities where zinc hydrosulfite is used as a bleaching agent. Permittees not using zinc hydrosulfite as a bleaching agent must certify to the permit issuing authority that they are not using this bleaching compound:

SUBPART G

[BAT effluent limitations for mechanical pulp facilities where pulp and paper at groundwood mills are produced through the application of the thermo-mechanical process]

Pollutant or pollutant property	Maximum for any 1 day	
	Kg/kkg (or pounds per 1,000 lb) of product	Milligrams/liter
Pentachlorophenol	0.00097	(0.011)(21.1)/y
Trichlorophenol	0.00088	(0.010)(21.1)/y
Zinc	0.26	(3.0)(21.1)/y
y = wastewater discharged in kgal per ton of product.		

SUBPART G

[BAT effluent limitations for mechanical pulp facilities where the integrated production of pulp and coarse paper, molded pulp products, and newsprint at groundwood mills occurs]

Pollutant or pollutant property	Maximum for any 1 day	
	Kg/kkg (or pounds per 1,000 lb) of product	Milligrams/liter
Pentachlorophenol	0.0011	(0.011)(23.8)/y
Trichlorophenol	0.00099	(0.010)(23.8)/y
Zinc	0.30	(3.0)(23.8)/y
y = wastewater discharged in kgal per ton of product.		

SUBPART G

[BAT effluent limitations for mechanical pulp facilities where the integrated production of pulp and fine paper at groundwood mills occurs

Pollutant or pollutant property	Maximum for any 1 day	
	Kg/kkg (or pounds per 1,000 lb) of product	Milligrams/liter
Pentachlorophenol	0.0010	(0.011)(21.9)/y
Trichlorophenol	0.00092	(0.010)(21.9)/y
Zinc	0.27	(3.0)(21.9)/y
y = wastewater discharged in kgal per ton of product.		

(b) [Reserved]

§ 430.75 New source performance standards (NSPS).

(a) The following applies to mechanical pulp facilities where pulp and paper at groundwood mills are produced through the application of the thermo-mechanical process; mechanical pulp facilities where the integrated

production of pulp and coarse paper, molded pulp products, and newsprint at groundwood mills occurs; and mechanical pulp facilities where the integrated production of pulp and fine paper at groundwood mills occurs: any new source subject to this subpart must achieve the following new source performance standards (NSPS), except that non-continuous dischargers shall not be subject to the maximum day and average of 30 consecutive days effluent limitations for BOD5 and TSS, but shall be subject to annual average effluent limitations. Also, for non-continuous dischargers, concentration limitations (mg/l) shall apply, where provided. Concentration limitations will only apply to non-continuous dischargers. Pentachlorophenol and trichlorophenol limitations are only applicable at facilities where chlorophenolic-containing biocides are used. Permittees not using chlorophenolic-containing biocides must certify to the permit-issuing authority that they are not using these biocides. Zinc limitations are only applicable at facilities where zinc hydrosulfite is used as a bleaching agent. Permittees not using zinc hydrosulfite as a bleaching agent must certify to the permit issuing authority that they are not using this bleaching compound:

SUBPART G

[NSPS for mechanical pulp facilities where pulp and paper at groundwood mills are produced through the application of the thermo-mechanical process]

Pollutant or pollutant property	Kg/kkg (or pounds per 1,000 lb) of product		
	Continuous dischargers		Non-continuous dischargers (annual average)
	Maximum for any 1 day	Average of daily values for 30 consecutive days	
BOD5	4.6	2.5	1.3
TSS	8.7	4.6	2.4
pH	(1)	(1)	(1)

	Maximum for any 1 day	
	Kg/kkg (or pounds per 1,000 lb) of product	Milligrams/liter
Pentachlorophenol	0.00097	(0.017)(13.8)/y
Trichlorophenol	0.00088	(0.015)(13.8)/y
Zinc	0.17	(3.0)(13.8)/y
y = wastewater discharged in kgal per ton at all times.		

[1] Within the range of 5.0 to 9.0 at all times.

SUBPART G

[NSPS for mechanical pulp facilities where the integrated production of pulp and coarse paper, molded pulp products, and newsprint at groundwood mills occurs]

Pollutant or pollutant property	Kg/kkg (or pounds per 1,000 lb) of product		
	Continuous dischargers		Non-continuous dischargers (annual average)
	Maximum for any 1 day	Average of daily values for 30 consecutive days	
BOD5	4.6	2.5	1.3
TSS	7.3	3.8	2.0
pH	(1)	(1)	(1)

	Maximum for any 1 day	
	Kg/kkg (or pounds per 1,000 lb) of product	Milligrams/liter
Pentachlorophenol	0.0011	(0.016)(16.8)/y
Trichlorophenol	0.00099	(0.014)(16.8)/y
Zinc	0.21	(3.0)(16.8)/y
y = wastewater discharged in kgal per ton at all times.		

[1] Within the range of 5.0 to 9.0 at all times.

SUBPART G

[NSPS mechanical pulp facilities where the integrated production of pulp and fine paper at groundwood mills occurs]

Pollutant or pollutant property	Kg/kkg (or pounds per 1,000 lb) of product		
	Continuous dischargers		Non-continuous dischargers (annual average)
	Maximum for any 1 day	Average of daily values for 30 consecutive days	
BOD5	3.5	1.9	0.99
TSS	5.8	3.0	1.58
pH	(1)	(1)	(1)

	Maximum for any 1 day	
	Kg/kkg (or pounds per 1,000 lb) of product	Milligrams/liter
Pentachlorophenol	0.0010	(0.016) (15.4)/y
Trichlorophenol	0.00092	(0.014) (15.4)/y
Zinc	0.19	(3.0) (15.4)/y
y = wastewater discharged in kgal per ton at all times.		

[1] Within the range of 5.0 to 9.0 at all times.

(b) [Reserved]

§ 430.76 Pretreatment standards for existing sources (PSES).

(a) The following applies to mechanical pulp facilities where pulp and paper at groundwood mills are produced through the application of the thermo-mechanical process; mechanical pulp facilities where the integrated production of pulp and coarse paper, molded pulp products, and newsprint at groundwood mills occurs; and mechanical pulp facilities where the integrated production of pulp and fine paper at groundwood mills occurs: except as provided in 40 CFR 403.7 and 403.13, any existing source subject to this subpart that introduces pollutants into a publicly owned treatment works must comply with 40 CFR part 403 and achieve the following pretreatment standards for existing sources (PSES). Pentachlorophenol and trichlorophenol limitations are only applicable at facilities where chlorophenolic-containing biocides are used. Permittees not using chlorophenolic-containing biocides must certify to the permit-issuing authority that they are not using these biocides. Zinc limitations are only applicable at facilities where zinc hydrosulfite is used as a bleaching agent. Permittees not using zinc hydrosulfite as a bleaching agent must certify to the permit-issuing authority that they are not using this bleaching compound. PSES must be attained on or before July 1, 1984:

SUBPART G

[PSES for mechanical pulp facilities where pulp and paper at groundwood mills are produced through the application of the thermo-mechanical process]

Pollutant or pollutant property	Maximum for any 1 day	
	Milligrams/liter (mg/1)	Kg/kkg (or pounds per 1,000 1b) of product[a]
Pentachlorophenol	(0.011) (21.1)/y	0.00097
Trichlorophenol	(0.010) (21.1)/y	0.00088
Zinc	(3.0) (21.1)/y	0.26
y = wastewater discharged in kgal per ton of product.		

[a] The following equivalent mass limitations are provided as guidance in cases when POTWs find it necessary to impose mass effluent limitations.

SUBPART G

[PSES for mechanical pulp facilities where the integrated production of pulp and coarse paper, molded pulp products, and newsprint at groundwood mills occurs]

Pollutant or pollutant property	Maximum for any 1 day	
	Milligrams/liter (mg/1)	Kg/kkg (or pounds per 1,000 1b) of product[a]
Pentachlorophenol	(0.011) (23.8)/y	0.0011
Trichlorophenol	(0.010) (23.8)/y	0.00099
Zinc	(3.0) (23.8)/y	0.30
y = wasterwater discharged in kgal per ton of product.		

[a] The following equivalent mass limitations are provided as guidance in cases when POTWs find it necessary to impose mass effluent limitations.

SUBPART G

[PSNS for mechanical pulp facilities where the integrated production of pulp and fine paper at groundwood mills occurs]

Pollutant or pollutant property	Maximum for any 1 day	
	Milligrams/liter (mg/l)	Kg/kkg (or pounds per 1,000 lb) of product[a]
Pentachlorophenol	(0.011)(21.9)/y	0.0010
Trichlorophenol	(0.010)(21.9)/y	0.00092
Zinc	(3.0)(21.9)/y	0.27
y = wastewater discharged in kgal per ton of product.		

[a] The following equivalent mass limitations are provided as guidance in cases when POTWs find it necessary to impose mass effluent limitations.

(b) [Reserved]

§ 430.77 Pretreatment standards for new sources (PSNS).

(a) The following applies to mechanical pulp facilities where pulp and paper at groundwood mills are produced through the application of the thermo-mechanical process; mechanical pulp facilities where the integrated production of pulp and coarse paper, molded pulp products, and newsprint at groundwood mills occurs; and mechanical pulp facilities where the integrated production of pulp and fine paper at groundwood mills occurs: except as provided in 40 CFR 403.7, any new source subject to this subpart that introduces pollutants into a publicly owned treatment works must comply with 40 CFR part 403 and achieve the following pretreatment standards for new sources (PSNS). Pentachlorophenol and trichlorophenol limitations are only applicable at facilities where chlorophenolic-containing biocides are used. Permittees not using chlorophenolic-containing biocides must certify to the permit-issuing authority that they are not using these biocides. Zinc limitations are only applicable at facilities where zinc hydrosulfite is used as a bleaching agent. Permittees not using zinc hydrosulfite as a bleaching agent must certify to the permit issuing authority that they are not using this bleaching compound:

SUBPART G

[PSNS for mechanical pulp facilities where pulp and paper at groundwood mills are produced through the application of the thermo-mechanical process]

Pollutant or pollutant property	Maximum for any 1 day	
	Milligrams/liter (mg/l)	Kg/kkg (or pounds per 1,000 lb) of product[a]
Pentachlorophenol	(0.017)(13.8)/y	0.00097
Trichlorophenol	(0.015)(13.8)/y	0.00088
Zinc	(3.0)(13.8)/y	0.17
y = wastewater discharged in kgal per ton of product.		

[a] The following equivalent mass limitations are provided as guidance in cases when POTWs find it necessary to impose mass effluent limitations.

SUBPART G

[PSNS for mechanical pulp facilities where the integrated production of pulp and coarse paper, molded pulp products, and newsprint at groundwood mills occurs]

Pollutant or pollutant property	Maximum for any 1 day	
	Milligrams/liter (mg/l)	Kg/kkg (or pounds per 1,000 lb) of product[a]
Pentachlorophenol	(0.016)(16.8)/y	0.0011
Trichlorophenol	(0.014)(16.8)/y	0.00099
Zinc	(3.0)(16.8)/y	0.21
y = wastewater discharged in kgal per ton of product.		

[a] The following equivalent mass limitations are provided as guidance in cases when POTWs find it necessary to impose mass effluent limitations.

SUBPART G

[PSNS for mechanical pulp facilities where the integrated production of pulp and fine paper at groundwood mills occurs]

Pollutant or pollutant property	Maximum for any 1 day	
	Milligrams/liter (mg/l)	Kg/kkg (or pounds per 1,000 lb) of product[a]
Pentachlorophenol	(0.016)(15.4)/y	0.0010
Trichlorophenol	(0.014)(15.4)/y	0.00092
Zinc	(3.0)(15.4)/y	0.19
y = wastewater discharged in kgal per ton of product.		

[a] The following equivalent mass limitations are provided as guidance in cases when POTWs find it necessary to impose mass effluent limitations.

(b) [Reserved]

Subpart H—Non-Wood Chemical Pulp Subcategory

§ 430.80 Applicability; description of the non-wood chemical pulp subcategory.

The provisions of this subpart are applicable to discharges resulting from the production of pulp and paper at non-wood chemical pulp mills. This subcategory includes, but is not limited to, mills producing non-wood pulps from chemical pulping processes such as kraft, sulfite, or soda.

§ 430.81 Specialized definitions.

The general definitions, abbreviations, and methods of analysis set forth in 40 CFR 401 and § 430.01 of this part shall apply to this subpart.

§ 430.82 Effluent limitations representing the degree of effluent reduction attainable by the application of best practicable control technology currently available (BPT). [Reserved]

§ 430.83 Effluent limitations representing the degree of effluent reduction attainable by the application of best conventional pollutant control technology (BCT). [Reserved]

§ 430.84 Effluent limitations representing the degree of effluent reduction attainable by the application of best available technology economically achievable (BAT). [Reserved]

§ 430.85 New source performance standards (NSPS). [Reserved]

§ 430.86 Pretreatment standards for existing sources (PSES). [Reserved]

§ 430.87 Pretreatment standards for new sources (PSNS). [Reserved]

Subpart I—Secondary Fiber Deink Subcategory

§ 430.90 Applicability; description of the secondary fiber deink subcategory.

The provisions of this subpart are applicable to discharges resulting from the integrated production of pulp and paper at deink mills.

§ 430.91 Specialized definitions.

For the purpose of this subpart, the general definitions, abbreviations, and methods of analysis set forth in 40 CFR part 401 and § 430.01 of this part shall apply to this subpart.

§ 430.92 Effluent limitations representing the degree of effluent reduction attainable by the application of the best practicable control technology currently available (BPT).

Except as provided in 40 CFR 125.30 through 125.32, any existing point source subject to this subpart must achieve the following effluent limitations representing the degree of effluent reduction attainable by the application of the best practicable control technology currently available (BPT), except that non-continuous dischargers shall not be subject to the maximum day and average of 30 consecutive days limitations but shall be subject to annual average effluent limitations:

SUBPART I

[BPT effluent limitations]

Pollutant or pollutant property	Kg/kkg (or pounds per 1,000 lb) of product		
	Continuous dischargers		Non-continuous dischargers (annual average)
	Maximum for any 1 day	Average of daily values for 30 consecutive days	
BOD5	18.1	9.4	5.3
TSS	24.05	12.95	7.12
pH	(1)	(1)	(1)

1 Within the range of 5.0 to 9.0 at all times.

§ 430.93 Effluent limitations guidelines representing the degree of effluent reduction attainable by the application of the best conventional pollutant control technology (BCT).

Except as provided in 40 CFR 125.30 through 125.32, any existing point source subject to this subpart shall achieve the following effluent limitations representing the degree of effluent reduction attainable by the application of the best conventional pollutant control technology (BCT): The limitations shall be the same as those specified for conventional pollutants (which are defined in 40 CFR 401.16) in § 430.92 of this subpart for the best practicable control technology currently available (BPT).

§ 430.94 Effluent limitations representing the degree of effluent reduction attainable by the application of the best available technology economically achievable (BAT).

Except as provided in 40 CFR 125.30 through 125.32, any existing point source subject to this subpart where chlorophenolic-containing biocides are used must achieve the following effluent limitations representing the degree of effluent reduction attainable by the application of the best available technology economically achievable (BAT). Non-continuous dischargers shall not be subject to the maximum day mass limitations in kg/kkg (lb/1000 lb) but shall be subject to concentration limitations. Concentration limitations are only applicable to non-continuous dischargers. Permittees not using chlorophenolic-containing biocides must certify to the permit-issuing authority that they are not using these biocides:

SUBPART I

[Facilities where fine or tissue paper is produced]

Pollutant or pollutant property	BAT effluent limitations	
	Maximum for any 1 day	
	Kg/kkg (or pounds per 1,000 lb) of product	Milligrams/liter
Pentachlorophenol	0.0030	(0.029)(24.4)/y
Trichlorophenol	0.0069	(0.068)(24.4)/y
y = wastewater discharged in kgal per ton of product.		

SUBPART I

[Facilities where newsprint is produced]

Pollutant or pollutant property	BAT effluent limitations	
	Maximum for any 1 day	
	Kg/kkg (or pounds per 1,000 lb) of product	Milligrams/liter
Pentachlorophenol	0.0030	(0.029)(24.4)/y
Trichlorophenol	0.0010	(0.010)(24.4)/y
y = wastewater discharged in kgal per ton of product.		

§ 430.95 New source performance standards (NSPS).

Any new source subject to this subpart must achieve the following new source performance standards (NSPS), except that non-continuous dischargers shall not be subject to the maximum day and average of 30 consecutive days effluent limitations for BOD5 and TSS, but shall be subject to annual average effluent limitations. Also, for non-continuous dischargers, concentration

limitations (mg/l) shall apply, where provided. Concentration limitations will only apply to non-continuous dischargers. Only facilities where chlorophenolic-containing biocides are used shall be subject to pentachlorophenol and trichlorophenol limitations. Permittees not using chlorophenolic-containing biocides must certify to the permit-issuing authority that they are not using these biocides:

SUBPART I

[Facilities where fine paper is produced]

[NSPS]

Pollutant or pollutant property	Kg/kkg (or pounds per 1,000 lb) of product		
	Continuous dischargers		Non-continuous dischargers (annual average)
	Maximum for any 1 day	Average of daily values for 30 consecutive days	
BOD5	5.7	3.1	1.6
TSS	8.7	4.6	2.4
pH	(1)	(1)	(1)

	Maximum for any 1 day	
	Kg/kkg (or pounds per 1,000 lb) of product	Milligrams/liter
Pentachlorophenol	0.0030	(0.045)(15.9)/y
Trichlorophenol	0.0069	(0.104)(15.9)/y
y = wastewater discharged in kgal per ton at all times.		

1 Within the range of 5.0 to 9.0 at all times.

SUBPART I

[Facilities where tissue paper is produced]

[NSPS]

Pollutant or pollutant property	Kg/kkg (or pounds per 1,000 lb) of product		
	Continuous dischargers		Non-continuous dischargers (annual average)
	Maximum for any 1 day	Average of daily values for 30 consecutive days	
BOD5	9.6	5.2	2.72
TSS	13.1	6.8	3.58
pH	(1)	(1)	(1)

	Maximum for any 1 day	
	Kg/kkg (or pounds per 1,000 lb) of product	Milligrams/liter
Pentachlorophenol	0.0030	(0.036)(19.5)/y
Trichlorophenol	0.0069	(0.085)(19.5)/y
y = wastewater discharged in kgal per ton at all times.		

1 Within the range of 5.0 to 9.0 at all times.

SUBPART I

[Facilities where newsprint is produced]

[NSPS]

Pollutant or pollutant property	Kg/kkg (or pounds per 1,000 lb) of product		
	Continuous dischargers		Non-continuous dischargers (annual average)
	Maximum for any 1 day	Average of daily values for 30 consecutive days	
BOD5	6.0	3.2	1.7
TSS	12.0	6.3	3.3
pH	(1)	(1)	(1)

	Maximum for any 1 day	
	Kg/kkg (or pounds per 1,000 lb) of product	Milligrams/liter
Pentachlorophenol	0.0030	(0.044)(16.2)/y
Trichlorophenol	0.0010	(0.015)(16.2)/y
y = wastewater discharged in kgal per ton at all times.		

1 Within the range of 5.0 to 9.0 at all times.

§ 430.96 Pretreatment standards for existing sources (PSES).

(a) Except as provided in 40 CFR 403.7 and 403.13, any existing source subject to this subpart that introduces pollutants into a publicly owned treatment works must comply with 40 CFR part 403 and achieve the following pretreatment standards for existing sources (PSES) if it uses chlorophenolic-containing biocides. Permittees not using chlorophenolic-containing biocides must certify to the permit-issuing authority that they are not using these biocides. PSES must be attained on or before July 1, 1984:

SUBPART I

[Facilities where fine or tissue paper is produced]

Pollutant or pollutant property	PSES	
	Maximum for any 1 day	
	Milligrams/liter (mg/l)	Kg/kkg (or pounds per 1,000 lb) of product [a]
Pentachlorophenol	(0.032)(24.4)/y	0.0033
Trichlorophenol	(0.082)(24.4)/y	0.0084
y = wastewater discharged in kgal per ton of product.		

[a] The following equivalent mass limitations are provided as guidance in cases when POTWs find it necessary to impose mass equivalent limitations.

SUBPART I

[Facilities where newsprint is produced]

Pollutant or pollutant property	PSES	
	Maximum for any 1 day	
	Milligrams/liter (mg/l)	Kg/kkg (or pounds per 1,000 lb) of product [a]
Pentachlorophenol	(0.032)(24.4)/y	0.0033
Trichlorophenol	(0.010)(24.4)/y	0.0010
y = wastewater discharged in kgal per ton of product.		

[a] The following equivalent mass limitations are provided as guidance in cases when POTWs find it necessary to impose mass equivalent limitations.

§ 430.97 Pretreatment standards for new sources (PSNS).

(a) Except as provided in 40 CFR 403.7, any new source subject to this subpart that introduces pollutants into a publicly owned treatment works must comply with 40 CFR part 403 and achieve the following pretreatment standards for new sources (PSNS) if it uses chlorophenolic-containing biocides. Permittees not using chlorophenolic-containing biocides must certify to the permit-issuing authority that they are not using these biocides:

SUBPART I

[Facilities where fine paper is produced]

Pollutant or pollutant property	PSNS	
	Maximum for any 1 day	
	Milligrams/liter (mg/l)	Kg/kkg (or pounds per 1,000 lb) of product [a]
Pentachlorophenol	(0.049)(15.9)/y	0.0033
Trichlorophenol	(0.126)(15.9)/y	0.0084
y = wastewater discharged in kgal per ton of product.		

[a] The following equivalent mass limitations are provided as guidance in cases when POTWs find it necessary to impose mass equivalent limitations.

SUBPART I

[Facilities where tissue paper is produced]

Pollutant or pollutant property	PSNS	
	Maximum for any 1 day	
	Milligrams/liter (mg/l)	Kg/kkg (or pounds per 1,000 lb) of product [a]
Pentachlorophenol	(0.040)(19.5)/y	0.0033
Trichlorophenol	(0.103)(19.5)/y	0.0084
y = wastewater discharged in kgal per ton of product.		

[a] The following equivalent mass limitations are provided as guidance in cases when POTWs find it necessary to impose mass equivalent limitations.

SUBPART I

[Facilities where newsprint is produced]

Pollutant or pollutant property	PSNS	
	Maximum for any 1 day	
	Milligrams/liter (mg/l)	Kg/kkg (or pounds per 1,000 lb) of product [a]
Pentachlorophenol	(0.048)(16.2)/y	0.0033
Trichlorophenol	(0.015)(16.2)/y	0.0010
y = wastewater discharged in kgal per ton of product.		

[a] The following equivalent mass limitations are provided as guidance in cases when POTWs find it necessary to impose mass equivalent limitations.

Subpart J—Secondary Fiber Non-Deink Subcategory

§ 430.100 Applicability; description of the secondary fiber non-deink subcategory.

The provisions of this subpart are applicable to discharges resulting from the production of: paperboard from wastepaper; tissue paper from wastepaper without deinking at secondary fiber mills; molded products from wastepaper without deinking at secondary fiber mills; and builders' paper and roofing felt from wastepaper.

§ 430.101 Specialized definitions.

For the purpose of this subpart:

(a) Except as provided below, the general definitions, abbreviations, and methods of analysis set forth in 40 CFR part 401 and § 430.01 of this part shall apply to this subpart.

(b) Noncorrugating medium furnish subdivision mills are mills where recycled corrugating medium is not used in the production of paperboard.

(c) Corrugating medium furnish subdivision mills are mills where only recycled corrugating medium is used in the production of paperboard.

§ 430.102 Effluent limitations representing the degree of effluent reduction attainable by the application of the best practicable control technology currently available (BPT).

(a) Except as provided in 40 CFR 125.30 through 125.32, any existing point source subject to this subpart must achieve the following effluent limitations representing the degree of effluent reduction attainable by the application of the best practicable control technology currently available (BPT):

SUBPART J

[BPT effluent limitations for secondary fiber non-deink facilities where paperboard from wastepaper is produced—noncorrugating medium finish subdivision]

Pollutant or pollutant property	Kg/kkg (or pounds per 1,000 lb) of product	
	Maximum for any 1 day	Average of daily values for 30 consecutive days
BOD5	3.0	1.5
TSS	5.0	2.5
pH	(1)	(1)

1 1Within the range of 6.0 to 9.0 at all times.

SUBPART J

[BPT effluent limitations for secondary fiber non-deink facilities where paperboard from wastepaper is produced—corrugating medium finish subdivision]

Pollutant or pollutant property	Kg/kkg (or pounds per 1,000 lb) of product	
	Maximum for any 1 day	Average of daily values for 30 consecutive days
BOD5	5.7	2.8
TSS	9.2	4.6
pH	(1)	(1)

1 Within the range of 6.0 to 9.0 at all times.

SUBPART J

[BPT effluent limitations for secondary fiber non-deink facilities where builders' paper and roofing felt from wastepaper are produced]

Pollutant or pollutant property	Kg/kkg (or pounds per 1,000 lb) of product	
	Maximum for any 1 day	Average of daily values for 30 consecutive days
BOD5	5.0	3.0
TSS	5.0	3.0
pH	(1)	(1)
Setteable Solids	(2)	(2)

1 Within the range of 6.0 to 9.0 at all times.
2 Not to exceed 0.2 ml/l.

(b) Except as provided in 40 CFR 125.30 through 125.32, any existing point source subject to this subpart must achieve the following effluent limitations representing the degree of effluent reduction attainable by the application of the best practicable control technology currently available (BPT), except that non-continuous dischargers shall not be subject to the maximum day and average of 30 consecutive days limitations but shall be subject to annual average effluent limitations:

SUBPART J

[BPT effluent limitations for secondary fiber non-deink facilities where tissue from wastepaper is produced without deinking]

Pollutant or pollutant property	Kg/kkg (or pounds per 1,000 lb) of product		
	Continuous dischargers		Non-continuous dischargers (annual average days)
	Maximum for any 1 day	Average of daily values for 30 consecutive days	
BOD5	13.7	7.1	4.0
TSS	17.05	9.2	5.1
pH	(1)	(1)	(1)

1 Within the range of 5.0 to 9.0 at all times.

SUBPART J

[BPT effluent limitations for secondary fiber non-deink facilities where molded products from wastepaper are produced without deinking]

Pollutant or pollutant property	Kg/kkg (or pounds per 1,000 lb) of product		
	Continuous dischargers		Non-continuous dischargers (annual average days)
	Maximum for any 1 day	Average of daily values for 30 consecutive days	
BOD5	4.4	2.3	1.3
TSS	10.8	5.8	3.2
pH	(1)	(1)	(1)

1 Within the range of 5.0 to 9.0 at all times.

§ 430.103 Effluent limitations guidelines representing the degree of effluent reduction attainable by the application of the best conventional pollutant control technology (BCT).

(a) Except as provided in 40 CFR 125.30 through 125.32, any existing point source subject to this subpart shall achieve the following effluent limitations representing the degree of effluent reduction attainable by the application of the best conventional pollutant control technology (BCT): The limitations shall be the same as those specified for conventional pollutants (which are defined in 40 CFR 401.16) in § 430.102 of this subpart for the best practicable control technology currently available (BPT).

(b) For secondary fiber non-deink facilities where paperboard from wastepaper is produced, non-continuous dischargers shall not be subject to the maximum day and average-of-30-consecutive-days limitations, but shall be subject to annual average effluent limitations determined by dividing the average-of-30-consecutive-days limitations for BOD5 and TSS by 1.77 and 2.18.

(c) For secondary fiber non-deink facilities where builders' paper and roofing felt from wastepaper are produced, non-continuous dischargers shall not be subject to the maximum day and average-of-30-consecutive-days limitations, but shall be subject to annual average effluent limitations determined by dividing the average-of-30-consecutive-days limitations for BOD5 and TSS by 1.90 and 1.90.

§ 430.104 Effluent limitations representing the degree of effluent reduction attainable by the application of the best available technology economically achievable (BAT).

Except as provided in 40 CFR 125.30 through 125.32, any existing point source subject to this subpart where chlorophenolic-containing biocides are used must achieve the following effluent limitations representing the degree of effluent reduction attainable by the application of the best available technology economically achievable (BAT). Non-continuous dischargers shall not be subject to the maximum day mass limitations in kg/kkg (lb/1000 lb) but shall be subject to concentration limitations. Concentration limitations are only applicable to non-continuous dischargers. Permittees not using chlorophenolic-containing biocides must certify to the permit-issuing authority that they are not using these biocides:

SUBPART J

[BAT effluent limitations for secondary fiber non-deink facilities where paperboard from wastepaper is produced]

Pollutant or pollutant property	Maximum for any 1 day	
	Kg/kkg (or pounds per 1,000 lb) of product	Milligrams/liter
Pentachlorophenol	0.00087	(0.029)(7.2)/y
Trichlorophenol	0.00030	(0.010)(7.2)/y
y = wastewater discharged in kgal per ton of product.		

SUBPART J

[BAT effluent limitations for secondary fiber non-deink facilities where builders' paper and roofing felt from wastepaper are produced]

Pollutant or pollutant property	Maximum for any 1 day	
	Kg/kkg (or pounds per 1,000 lb) of product	Milligrams/liter
Pentachlorophenol	0.0017	(0.029)(14.4)/y
Trichlorophenol	0.00060	(0.010)(14.4)/y
y = wastewater discharged in kgal per ton of product.		

SUBPART J

[BAT effluent limitations for secondary fiber non-deink facilities where tissue from wastepaper is produced without deinking]

Pollutant or pollutant property	Maximum for any 1 day	
	Kg/kkg (or pounds per 1,000 lb) of product	Milligrams/liter
Pentachlorophenol	0.0030	(0.029)(25.2)/y
Trichlorophenol	0.0011	(0.010)(25.2)/y
y = wastewater discharged in kgal per ton of product.		

SUBPART J

[BAT effluent limitations for secondary fiber non-deink facilities where molded products from wastepaper are produced without deinking]

Pollutant or pollutant property	Maximum for any 1 day	
	Kg/kkg (or pounds per 1,000 lb) of product	Milligrams/liter
Pentachlorophenol	0.0026	(0.029)(21.1)/y
Trichlorophenol	0.00088	(0.010)(21.1)/y
y = wastewater discharged in kgal per ton of product.		

§ 430.105 New source performance standards (NSPS).

Any new source subject to this subpart must achieve the following new source performance standards (NSPS), except that non-continuous dischargers shall not be subject to the maximum day and average of 30 consecutive days effluent limitations for BOD5 and TSS, but shall be subject to annual average effluent limitations. Also, for non-continuous dischargers, concentration limitations (mg/l) shall apply, where provided. Concentration limitations will only apply to non-continuous dischargers. Only facilities where chlorophenolic-containing biocides are used shall be subject to pentachlorophenol and trichlorophenol limitations. Permittees not using chlorophenolic-containing biocides must certify to the permit-issuing authority that they are not using these biocides:

SUBPART J

[NSPS for secondary fiber non-deink facilities where paperboard from wastepaper is produced—noncorrugating medium furnish subdivision]

Pollutant or pollutant property	Kg/kkg (or pounds per 1,000 lb) of product		
	Continuous dischargers		Non-continuous dischargers (annual average)
	Maximum for any 1 day	Average of daily values for 30 consecutive days	
BOD5	2.6	1.4	0.73
TSS	3.5	1.8	0.95
pH	(1)	(1)	(1)

	Maximum for any 1 day	
	Kg/kkg (or pounds per 1,000 lb) of product	Milligrams/liter
Pentachlorophenol	0.00087	(0.065)(3.2)/y
Trichlorophenol	0.00030	(0.023)(3.2)/y
y = wastewater discharged in kgal per ton at all times.		

[1] Within the range of 5.0 to 9.0 at all times.

SUBPART J

[NSPS for secondary fiber non-deink facilities where paperboard from wastepaper is produced—corrugating medium finish subdivision]

Pollutant or pollutant property	Kg/kkg (or pounds per 1,000 lb) of product		
	Continuous dischargers		Non-continuous dischargers (annual average)
	Maximum for any 1 day	Average of daily values for 30 consecutive days	
BOD5	3.9	2.1	1.1
TSS	4.4	2.3	1.2
pH	(1)	(1)	(1)

	Maximum for any 1 day	
	Kg/kkg (or pounds per 1,000 lb) of product	Milligrams/liter
Pentachlorophenol	0.00087	(0.065)(3.2)/y
Trichlorophenol	0.00030	(0.023)(3.2)/y
y = wastewater discharged in kgal per ton at all times.		

[1] Within the range of 5.0 to 9.0 at all times.

SUBPART J

[NSPS for secondary fiber non-deink facilities where builders' paper and roofing felt from wastepaper are produced]

Pollutant or pollutant property	Kg/kkg (or pounds per 1,000 lb) of product		
	Continuous dischargers		Non-continuous dischargers (annual average)
	Maximum for any 1 day	Average of daily values for 30 consecutive days	
BOD5	1.7	0.94	0.49
TSS	2.7	1.40	0.74

SUBPART J—Continued

[NSPS for secondary fiber non-deink facilities where builders' paper and roofing felt from wastepaper are produced]

Pollutant or pollutant property	Kg/kkg (or pounds per 1,000 lb) of product		
	Continuous dischargers		Non-continuous dischargers (annual average)
	Maximum for any 1 day	Average of daily values for 30 consecutive days	
pH	(1)	(1)	(1)

	Maximum for any 1 day	
	Kg/kkg (or pounds per 1,000 lb) of product	Milligrams/liter
Pentachlorophenol	0.0017	(0.155)(2.7)/y
Trichlorophenol	0.00060	(0.053)(2.7)/y
y = wastewater discharged in kgal per ton at all times.		

[1] Within the range of 5.0 to 9.0 at all times.

SUBPART J

[NSPS for secondary fiber non-deink facilities where tissue from wastepaper is produced without deinking]

Pollutant or pollutant property	Kg/kkg (or pounds per 1,000 lb) of product		
	Continuous dischargers		Non-continuous dischargers (annual average)
	Maximum for any 1 day	Average of daily values for 30 consecutive days	
BOD5	4.6	2.5	1.3
TSS	10.2	5.3	2.8
pH	(1)	(1)	(1)

	Maximum for any 1 day	
	Kg/kkg (or pounds per 1,000 lb) of product	Milligrams/liter
Pentachlorophenol	0.0030	(0.045)(16.3)/y
Trichlorophenol	0.0011	(0.015)(16.3)/y
y = wastewater discharged in kgal per ton at all times.		

[1] Within the range of 5.0 to 9.0 at all times.

SUBPART J

[NSPS for secondary fiber non-deink facilities where molded products from wastepaper are produced without deinking]

Pollutant or pollutant property	Kg/kkg (or pounds per 1,000 lb) of product		
	Continuous dischargers		Non-continuous dischargers (annual average)
	Maximum for any 1 day	Average of daily values for 30 consecutive days	
BOD5	2.1	1.1	0.58
TSS	4.4	2.3	1.21
pH	(1)	(1)	(1)

	Maximum for any 1 day	
	Kg/kkg (or pounds per 1,000 lb) of product	Milligrams/liter
Pentachlorophenol	0.0026	(0.107)(5.7)/y
Trichlorophenol	0.00088	(0.037)(5.7)/y
y = wastewater discharged in kgal per ton at all times.		

[1] Within the range of 5.0 to 9.0 at all times.

§ 430.106 Pretreatment standards for existing sources (PSES).

Except as provided in 40 CFR 403.7 and 403.13, any existing source subject to this subpart that introduces pollutants into a publicly owned treatment works must: comply with 40 CFR part 403; and achieve the following pretreatment standards for existing sources (PSES) if it uses chlorophenolic-containing biocides. Permittees not using chlorophenolic-containing biocides must certify to the permit-issuing authority that they are not using these biocides. PSES must be attained on or before July 1, 1984:

SUBPART J

[PSES for secondary fiber non-deink facilities where paperboard from wastepaper is produced]

Pollutant or pollutant property	Maximum for any 1 day	
	Milligrams/liter (mg/l)	Kg/kkg (or pounds per 1,000 lb) of product[a]
Pentachlorophenol	(0.032)(7.2)/y	0.00096
Trichlorophenol	(0.010)(7.2)/y	0.00030
y = wastewater discharged in kgal per ton of product.		

[a] The following equivalent mass limitations are provided as guidance in cases when POTWs find it necessary to impose mass effluent limitations.

SUBPART J

[PSES for secondary fiber non-deink facilities where builders' paper and roofing felt from wastepaper are produced]

Pollutant or pollutant property	Maximum for any 1 day	
	Milligrams/liter (mg/l)	Kg/kkg (or pounds per 1,000 lb) of product[a]
Pentachlorophenol	(0.032)(14.4)y	0.0019
Trichlorophenol	(0.010)(14.4)y	0.00060
y = wastewater discharged in kgal per ton of product.		

[a] The following equivalent mass limitations are provided as guidance in cases when POTWs find it necessary to impose mass effluent limitations.

SUBPART J

[PSES for secondary fiber non-deink facilities where tissue from wastepaper is produced without deinking]

Pollutant or pollutant property	Maximum for any 1 day	
	Milligrams/liter (mg/l)	Kg/kkg (or pounds per 1,000 lb) of product[a]
Pentachlorophenol	(0.032)(25.2)y	0.0034
Trichlorophenol	(0.010)(25.2)/y	0.0011
y = wastewater discharged in kgal per ton of product.		

[a] The following equivalent mass limitations are provided as guidance in cases when POTWs find it necessary to impose mass effluent limitations.

SUBPART J

[PSES for secondary fiber non-deink facilities where molded products from wastepaper are produced without deinking]

Pollutant or pollutant property	Maximum for any 1 day	
	Milligrams/liter (mg/l)	Kg/kkg (or pounds per 1,000 lb) of product [a]
Pentachlorophenol	(0.032)(21.1)y	0.0028
Trichlorophenol	(0.010)(21.1)y	0.00088
y = wastewater discharged in kgal per ton of product.		

[a] The following equivalent mass limitations are provided as guidance in cases when POTWs find it necessary to impose mass effluent limitations.

§ 430.107 Pretreatment standards for new sources (PSNS).

Except as provided in 40 CFR 403.7, any new source subject to this subpart that introduces pollutants into a publicly owned treatment works must: comply with 40 CFR part 403; and achieve the following pretreatment standards for new sources (PSNS) if it uses chlorophenolic-containing biocides. Permittees not using chlorophenolic-containing biocides must certify to the permit-issuing authority that they are not using these biocides:

SUBPART J

[PSNS for secondary fiber non-deink facilities where paperboard from wastepaper is produced]

Pollutant or pollutant property	Maximum for any 1 day	
	Milligrams/liter (mg/l)	Kg/kkg (or pounds per 1,000 lb) of product [a]
Pentachlorophenol	(0.072)(3.2)/y	0.00096
Trichlorophenol	(0.023)(3.2)/y	0.00030
y = wastewater discharged in kgal per ton of product.		

[a] The following equivalent mass limitations are provided as guidance in cases when POTWs find it necessary to impose mass effluent limitations.

SUBPART J

[PSNS for secondary fiber non-deink facilities where builders' paper and roofing felt from wastepaper are produced]

Pollutant or pollutant property	Maximum for any 1 day	
	Milligrams/liter (mg/l)	Kg/kkg (or pounds per 1,000 lb) of product [a]
Pentachlorophenol	(0.171)(2.7)/y	0.0019
Trichlorophenol	(0.053)(2.7)/y	0.00060
y = wastewater discharged in kgal per ton of product.		

[a] The following equivalent mass limitations are provided as guidance in cases when POTWs find it necessary to impose mass effluent limitations.

SUBPART J

[PSNS for secondary fiber non-deink facilities where tissue from wastepaper is produced without deinking]

Pollutant or pollutant property	Maximum for any 1 day	
	Milligrams/liter (mg/l)	Kg/kkg (or pounds per 1,000 lb) of product [a]
Pentachlorophenol	(0.049)(16.3)/y	0.0034
Trichlorophenol	(0.015)(16.3)/y	0.0011
y = wastewater discharged in kgal per ton of product.		

[a] The following equivalent mass limitations are provided as guidance in cases when POTWs find it necessary to impose mass effluent limitations.

SUBPART J

[PSNS for secondary fiber non-deink facilities where molded products from wastepaper are produced without deinking]

Pollutant or pollutant property	Maximum for any 1 day	
	Milligrams/liter (mg/l)	Kg/kkg (or pounds per 1,000 lb) of product[a]
Pentachlorophenol	(0.118)(5.7)/y	0.0028
Trichlorophenol	(0.037)(5.7)/y	0.00088
y = wastewater discharged in kgal per ton of product.		

[a] The following equivalent mass limitations are provided as guidance in cases when POTWs find it necessary to impose mass effluent limitations.

Subpart K—Fine and Lightweight Papers from Purchased Pulp Subcategory

§ 430.110 Applicability; description of the fine and lightweight papers from purchased pulp subcategory.

The provisions of this subpart are applicable to discharges resulting from the production of: fine paper at nonintegrated mills; and lightweight paper at nonintegrated mills.

§ 430.111 Specialized definitions.

For the purpose of this subpart:

(a) Except as provided in paragraphs (b) and (c) of this section, the general definitions, abbreviations, and methods of analysis set forth in 40 CFR part 401 and § 430.01 of this part shall apply to this subpart.

(b) Cotton fiber furnish subdivision mills are those mills where significant quantities of cotton fibers (equal to or greater than 4 percent of the total product) are used in the production of fine papers.

(c) Wood fiber furnish subdivision mills are those mills where cotton fibers are not used in the production of fine papers.

§ 430.112 Effluent limitations representing the degree of effluent reduction attainable by the application of the best practicable control technology currently available (BPT).

Except as provided in 40 CFR 125.30 through 125.32, any existing point source subject to this subpart must achieve the following effluent limitations representing the degree of effluent reduction attainable by the application of the best practicable control technology currently available (BPT), except that non-continuous dischargers shall not be subject to the maximum day and average of 30 consecutive days limitations but shall be subject to annual average effluent limitations:

SUBPART K

[BPT effluent limitations for non-integrated mills where fine paper is produced from purchased pulp—wood fiber furnish subdivision]

Pollutant or pollutant property	Kg/kkg (or pounds per 1,000 lb) of product		
	Continuous dischargers		Non-continuous dischargers (annual average)
	Maximum for any 1 day	Average of daily values for 30 consecutive days	
BOD5	8.2	4.25	2.4
TSS	11.0	5.9	3.2
pH	(1)	(1)	(1)

[1] Within the range of 5.0 to 9.0 at all times.

SUBPART K

[BPT effluent limitations for non-integrated mills where fine paper is produced from purchased pulp—cotton fiber furnish subdivision]

Pollutant or pollutant property	Kg/kkg (or pounds per 1,000 lb) of product		
	Continuous dischargers		Non-continuous dischargers (annual average)
	Maximum for any 1 day	Average of daily values for 30 consecutive days	
BOD5	17.4	9.1	5.1
TSS	24.3	13.1	7.2

SUBPART K—Continued

[BPT effluent limitations for non-integrated mills where fine paper is produced from purchased pulp—cotton fiber furnish subdivision]

Pollutant or pollutant property	Kg/kkg (or pounds per 1,000 lb) of product		
	Continuous dischargers		Non-continuous dischargers (annual average)
	Maximum for any 1 day	Average of daily values for 30 consecutive days	
pH	(1)	(1)	(1)

1 Within the range of 5.0 to 9.0 at all times.

SUBPART K

[BPT effluent limitations for non-integrated mills where lightweight papers are produced from purchased pulp]

Pollutant or pollutant property	Kg/kkg (or pounds per 1,000 lb) of product		
	Continuous dischargers		Non-continuous dischargers (annual average)
	Maximum for any 1 day	Average of daily values for 30 consecutive days	
BOD5	24.1	13.2	7.37
TSS	21.6	10.6	6.0
pH	(1)	(1)	(1)

1 Within the range of 5.0 to 9.0 at all times.

SUBPART K

[BPT effluent limitations for non-integrated mills where lightweight papers are produced from purchased pulp— electrical grade papers subdivision

Pollutant or pollutant property	Kg/kkg (or pounds per 1,000 lb) of product		
	Continuous dischargers		Non-continuous dischargers (annual average)
	Maximum for any 1 day	Average of daily values for 30 consecutive days	
BOD5	38.0	20.9	11.7
TSS	34.2	16.7	9.5
pH	(1)	(1)	(1)

1 Within the range of 5.0 to 9.0 at all times.

§ 430.113 Effluent limitations guidelines representing the degree of effluent reduction attainable by the application of the best conventional pollutant control technology (BCT).

Except as provided in 40 CFR 125.30 through 125.32, any existing point source subject to this subpart shall achieve the following effluent limitations representing the degree of effluent reduction attainable by the application of the best conventional pollutant control technology (BCT): The limitations shall be the same as those specified for conventional pollutants (which are defined in 40 CFR 401.16) in § 430.102 of this subpart for the best practicable control technology currently available (BPT).

§ 430.114 Effluent limitations representing the degree of effluent reduction attainable by the application of the best available technology economically achievable (BAT).

Except as provided in 40 CFR 125.30 through 125.32, any existing point source subject to this subpart where chlorophenolic-containing biocides are used must achieve the following effluent limitations representing the degree of effluent reduction attainable by the application of the best available technology economically achievable (BAT). Non-continuous dischargers shall not be subject to the maximum day mass limitations in kg/kkg (lb/1000 lb) but shall be subject to concentration limitations. Concentration limitations are only applicable to non-continuous dischargers. Permittees not using chlorophenolic-containing biocides must certify to the permit-issuing authority that they are not using these biocides:

SUBPART K

[BAT effluent limitations for non-integrated mills where fine paper is produced from purchased pulp—wood fiber furnish subdivision]

Pollutant or pollutant property	Maximum for any 1 day	
	Kg/kkg (or pounds per 1,000 lb) of product	Milligrams/liter
Pentachlorophenol	0.0018	(0.029)(15.2)/y
Trichlorophenol	0.00064	(0.010)(15.2)/y
y = wastewater discharged in kgal per ton of product.		

SUBPART K

[BAT effluent limitations for non-integrated mills where fine paper is produced from purchased pulp—cotton fiber furnish subdivision]

Pollutant or pollutant property	Maximum for any 1 day	
	Kg/kkg (or pounds per 1,000 lb) of product	Milligrams/liter
Pentachlorophenol	0.0051	(0.029)(42.3)/y
Trichlorophenol	0.0018	(0.010)(42.3)/y
y = wastewater discharged in kgal per ton of product.		

SUBPART K

[BAT effluent limitations for non-integrated mills where lightweight papers are produced from purchased pulp]

Pollutant or pollutant property	Maximum for any 1 day	
	Kg/kkg (or pounds per 1,000 lb) of product	Milligrams/liter
Pentachlorophenol	0.0059	(0.029)(48.7)/y
Trichlorophenol	0.0020	(0.010)(48.7)/y
y = wastewater discharged in kgal per ton of product.		

SUBPART K

[BAT effluent limitations for non-integrated mills where lightweight papers are produced from purchased pulp—electrical grade papers subdivision]

Pollutant or pollutant property	Maximum for any 1 day	
	Kg/kkg (or pounds per 1,000 lb) of product	Milligrams/liter
Pentachlorophenol	0.0093	(0.029)(76.9)/y
Trichlorophenol	0.0032	(0.010)(76.9)/y
y = wastewater discharged in kgal per ton of product.		

§ 430.115 New source performance standards (NSPS).

Any new source subject to this subpart must achieve the following new source performance standards (NSPS), except that non-continuous dischargers shall not be subject to the maximum day and average of 30 consecutive days effluent limitations for BOD5 and TSS, but shall be subject to annual average effluent limitations. Also, for non-continuous dischargers, concentration limitations (mg/l) shall apply, where provided. Concentration limitations will only apply to non-continuous dischargers. Only facilities where chlorophenolic-containing biocides are used shall be subject to pentachlorophenol and trichlorophenol limitations. Permittees not using chlorophenolic-containing biocides must certify to the permit-issuing authority that they are not using these biocides:

SUBPART K

[NSPS for non-integrated mills where fine paper is produced from purchased pulp—wood fiber furnish subdivision]

Pollutant or pollutant property	Kg/kkg (or pounds per 1,000 lb) of product		
	Continuous dischargers		Non-continuous dischargers (Annual average)
	Maximum for any 1 day	Average of daily values for 30 consecutive days	
BOD5	3.5	1.9	1.0
TSS	4.4	2.3	1.2
pH	(1)	(1)	(1)

	Maximum for any 1 day	
	Kg/kkg (or pounds per 1,000 lb) of product	Milligrams/liter
Pentachlorophenol	0.0018	(0.047)(9.4)/y
Trichlorophenol	0.00064	(0.016)(9.4)/y
y=wastewater discharged in kgal per ton at all times.		

[1] Within the range of 5.0 to 9.0 at all times.

SUBPART K

[NSPS for non-integrated mills where fine paper is produced from purchased pulp—cotton fiber furnish subdivision]

Pollutant or pollutant property	Kg/kkg (or pounds per 1,000 lb) of product		
	Continuous dischargers		Non-continuous dischargers (annual average)
	Maximum for any 1 day	Average of daily values for 30 consecutive days	
BOD5	7.8	4.2	2.2
TSS	9.5	4.9	2.6
pH	(1)	(1)	(1)

	Maximum for any 1 day	
	Kg/kkg (or pounds per 1,000 lb) of product	Milligrams/liter
Pentachlorophenol	0.0051	(0.039)(31.1)/y
Trichlorophenol	0.0018	(0.014)(31.1)/y
y = wastewater discharged in kgal per ton at all times.		

[1] Within the range of 5.0 to 9.0 at all times.

SUBPART K

[NSPS for non-integrated mills where lightweight papers are produced from purchased pulp]

Pollutant or pollutant property	Kg/kkg (or pounds per 1,000 lb) of product		
	Continuous dischargers		Non-continuous dischargers (annual average)
	Maximum for any 1 day	Average of daily values for 30 consecutive days	
BOD5	13.7	6.7	4.5
TSS	12.0	5.2	3.2
pH	(1)	(1)	(1)

	Maximum for any 1 day	
	Kg/kkg (or pounds per 1,000 lb) of product	Milligrams/liter
Pentachlorophenol	0.0059	(0.037)(38.2)/y
Trichlorophenol	0.0020	(0.013)(38.2)/y
y = wastewater discharged in kgal per ton at all times.		

[1] Within the range of 5.0 to 9.0 at all times.

SUBPART K

[NSPS for non-integrated mills where lightweight papers are produced from purchased pulp—electrical grade papers subdivision]

Pollutant or pollutant property	Kg/kkg (or pounds per 1,000 lb) of product		
	Continuous dischargers		Non-continuous dischargers (annual average)
	Maximum for any 1 day	Average of daily values for 30 consecutive days	
BOD5	24.1	11.7	7.9
TSS	21.1	9.2	5.6
pH	([1])	([1])	([1])

	Maximum for any 1 day	
	Kg/kkg (or pounds per 1,000 lb) of product	Milligrams/liter
Pentachlorophenol	0.0093	(0.033)(66.8)/y
Trichlorophenol	0.0032	(0.012)(66.8)/y
y = wastewater discharged in kgal per ton at all times.		

[1] Within the range of 5.0 to 9.0 at all times.

§ 430.116 Pretreatment standards for existing sources (PSES).

Except as provided in 40 CFR 403.7 and 403.13, any existing source subject to this subpart that introduces pollutants into a publicly owned treatment works must: comply with 40 CFR part 403; and achieve the following pretreatment standards for existing sources (PSES) if it uses chlorophenolic-containing biocides. Permittees not using chlorophenolic-containing biocides must certify to the permit-issuing authority that they are not using these biocides. PSES must be attained on or before July 1, 1984:

SUBPART K

[PSES for non-integrated mills where fine paper is produced from purchased pulp—wood fiber furnish subdivision]

Pollutant or pollutant property	Maximum for any 1 day	
	Milligrams/liter (mg/l)	Kg/kkg (or pounds per 1,000 lb) of product[a]
Pentachlorophenol	(0.032)(15.2)/y	0.0020
Trichlorophenol	(0.010)(15.2)/y	0.00064
y = wastewater discharged in kgal per ton of product.		

[a] The following equivalent mass limitations are provided as guidance in cases when POTWs find it necessary to impose mass effluent limitations.

SUBPART K

[PSES for non-integrated mills where fine paper is produced from purchased pulp—cotton fiber furnish subdivision]

Pollutant or pollutant property	Maximum for any 1 day	
	Milligrams/liter (mg/l)	Kg/kkg (or pounds per 1,000 lb) of product[a]
Pentachlorophenol	(0.032)(42.3)/y	0.0056

SUBPART K—Continued

[PSES for non-integrated mills where fine paper is produced from purchased pulp—cotton fiber furnish subdivision]

Pollutant or pollutant property	Maximum for any 1 day	
	Milligrams/liter (mg/l)	Kg/kkg (or pounds per 1,000 lb) of product [a]
Trichlorophenol	(0.010)(42.3)/y	0.0018
y = wastewater discharged in kgal per ton of product.		

[a] The following equivalent mass limitations are provided as guidance in cases when POTWs find it necessary to impose mass effluent limitations.

SUBPART K

[PSES for non-integrated mills where lightweight papers are produced from purchased pulp]

Pollutant or pollutant property	Maximum for any 1 day	
	Milligrams/liter (mg/l)	Kg/kkg (or pounds per 1,000 lb) of product [a]
Pentachlorophenol	(0.032)(48.7)/y	0.0065
Trichlorophenol	(0.010)(48.7)/y	0.0032
y = wastewater discharged in kgal per ton of product.		

[a] The following equivalent mass limitations are provided as guidance in cases when POTWs find it necessary to impose mass effluent limitations.

SUBPART K

[PSES for non-integrated mills where lightweight papers are produced from purchased pulp—electrical grade papers subdivision]

Pollutant or pollutant property	Maximum for any 1 day	
	Milligrams/liter (mg/l)	Kg/kkg (or pounds per 1,000 lb) of product [a]
Pentachlorophenol	(0.032)(76.9)/y	0.010
Trichlorophenol	(0.010)(76.9)/y	0.0032
y = wastewater discharged in kgal per ton of product.		

[a] The following equivalent mass limitations are provided as guidance in cases when POTWs find it necessary to impose mass effluent limitations.

§ 430.117 Pretreatment standards for new sources (PSNS).

Except as provided in 40 CFR 403.7, any new source subject to this subpart that introduces pollutants into a publicly owned treatment works must: comply with 40 CFR part 403; and achieve the following pretreatment standards for new sources (PSNS) if it uses chlorophenolic-containing biocides. Permittees not using chlorophenolic-containing biocides must certify to the permit-issuing authority that they are not using these biocides:

SUBPART K

[PSNS for non-integrated mills where fine paper is produced from purchased pulp—wood fiber furnish subdivision]

Pollutant or pollutant property	Maximum for any 1 day	
	Milligrams/liter (mg/l)	Kg/kkg (or pounds per 1,000 lb) of product [a]
Pentachlorophenol	(0.052)(9.4)/y	0.0020
Trichlorophenol	(0.016)(9.4)/y	0.0064
y = wastewater discharged in kgal per ton of product.		

[a] The following equivalent mass limitations are provided as guidance in cases when POTWs find it necessary to impose mass effluent limitations.

SUBPART K

[PSNS for non-integrated mills where fine paper is produced from purchased pulp—cotton fiber furnish subdivision]

Pollutant or pollutant property	Maximum for any 1 day	
	Milligrams/liter (mg/l)	Kg/kkg (or pounds per 1,000 lb) of product [a]
Pentachlorophenol	(0.044)(31.1)/y	0.0056
Trichlorophenol	(0.014)(31.1)/y	0.0018
y = wastewater discharged in kgal per ton of product.		

[a] The following equivalent mass limitations are provided as guidance in cases when POTWs find it necessary to impose mass effluent limitations.

SUBPART K

[PSNS for non-integrated mills where lightweight papers are produced from purchased pulp]

Pollutant or pollutant property	Maximum for any 1 day	
	Milligrams/liter (mg/l)	Kg/kkg (or pounds per 1,000 lb) of product [a]
Pentachlorophenol	(0.041)(38.2)/y	0.0065
Trichlorophenol	(0.013)(38.2)/y	0.0020
y = wastewater discharged in kgal per ton of product.		

[a] The following equivalent mass limitations are provided as guidance in cases when POTWs find it necessary to impose mass effluent limitations.

SUBPART K

[PSNS for non-integrated mills where lightweight papers are produced from purchased pulp—electrical grade papers subdivision]

Pollutant or pollutant property	Maximum for any 1 day	
	Milligrams/liter (mg/l)	Kg/kkg (or pounds per 1,000 lb) of product [a]
Pentachlorophenol	(0.037)(66.8)/y	0.010
Trichlorophenol	(0.012)(66.8)/y	0.0032
y = wastewater discharged in kgal per ton of product.		

[a] The following equivalent mass limitations are provided as guidance in cases when POTWs find it necessary to impose mass effluent limitations.

Subpart L—Tissue, Filter, Non-Woven, and Paperboard From Purchased Pulp Subcategory

§ 430.120 Applicability; description of the tissue, filter, non-woven, and paperboard from purchased pulp subcategory.

The provisions of this subpart are applicable to discharges resulting from the production of tissue papers at non-integrated mills, filter and non-woven papers at non-integrated mills, and paperboard at non-integrated mills. The production of electrical grades of board and matrix board is not included in this subpart.

§ 430.121 Specialized definitions.

For the purpose of this subpart, the general definitions, abbreviations, and methods of analysis set forth in 40 CFR part 401 and § 430.01 of this part shall apply to this subpart.

§ 430.122 Effluent limitations representing the degree of effluent reduction attainable by the application of the best practicable control technology currently available (BPT).

Except as provided in 40 CFR 125.30 through 125.32, any existing point source subject to this subpart must achieve the following effluent limitations representing the degree of effluent reduction attainable by the application of the best practicable control technology currently available (BPT), except that non-continuous dischargers shall not be subject to the maximum day and average of 30 consecutive days limitations but shall be subject to annual average effluent limitations:

SUBPART L

[BPT effluent limitations for non-integrated mills where tissue papers are produced from purchased pulp]

Pollutant or pollutant property	Kg/kkg (or pounds per 1,000 lb) of product		
	Continuous dischargers		Non-continuous dischargers (annual average)
	Maximum for any 1 day	Average of daily values for 30 consecutive days	
BOD5	11.4	6.25	3.49
TSS	10.25	5.0	2.84
pH	(1)	(1)	(1)

1 Within the range of 5.0 to 9.0 at all times.

SUBPART L

[BPT effluent limitations for non-integrated mills where filter and non-woven papers are produced from purchased pulp]

Pollutant or pollutant property	Kg/kkg (or pounds per 1,000 lb) of product		
	Continuous dischargers		Non-continuous dischargers (annual average)
	Maximum for any 1 day	Average of daily values for 30 consecutive days	
BOD5	29.6	16.3	9.1
TSS	26.6	13.0	7.4
pH	(1)	(1)	(1)

1 Within the range of 5.0 to 9.0 at all times.

SUBPART L

[BPT effluent limitations for non-integrated mills where paperboard is produced from purchased pulp]

Pollutant or pollutant property	Kg/kkg (or pounds per 1,000 lb) of product		
	Continuous dischargers	Non-continuous dischargers (Annual average)	
		Maximum for any 1 day	Average of daily values for 30 consecutive days
BOD5	6.5	3.6	2.0
TSS	5.8	2.8	1.6
pH	(1)	(1)	(1)

1 Within the range of 5.0 to 9.0 at all times.

§ 430.123 Effluent limitations guidelines representing the degree of effluent reduction attainable by the application of the best conventional pollutant control technology (BCT).

Except as provided in 40 CFR 125.30 through 125.32, any existing point source subject to this subpart shall achieve the following effluent limitations representing the degree of effluent reduction attainable by the application of the best conventional pollutant control technology (BCT): The limitations shall be the same as those specified for conventional pollutants (which are defined in 40 CFR 401.16) in § 430.122 of this subpart for the best practicable control technology currently available (BPT).

§ 430.124 Effluent limitations representing the degree of effluent reduction attainable by the application of the best available technology economically achievable (BAT).

Except as provided in 40 CFR 125.30 through 125.32, any existing point source subject to this subpart where chlorophenolic-containing biocides are used must achieve the following effluent limitations representing the degree of effluent reduction attainable by the application of the best available technology economically achievable (BAT). Non-continuous dischargers shall not be subject to the maximum day mass limitations in kg/kkg (lb/1000 lb) but shall be subject to concentration limitations. Concentration limitations are only applicable to non-continuous dischargers. Permittees not using chlorophenolic-containing biocides must certify to the permit-issuing authority that they are not using these biocides:

SUBPART L

[BAT effluent limitations for non-integrated mills where tissue papers are produced from purchased pulp]

Pollutant or pollutant property	Maximum for any 1 day	
	Kg/kkg (or pounds per 1,000 lb) of product	Milligrams/liter
Pentachlorophenol	0.0028	(0.029)(22.9)/y
Trichlorophenol	0.00096	(0.010)(22.9)/y
y = wastewater discharged in kgal per ton of product.		

SUBPART L

[BAT effluent limitations for non-integrated mills where filter and non-woven papers are produced from purchased pulp]

Pollutant or pollutant property	Maximum for any 1 day	
	Kg/kkg (or pounds per 1,000 lb) of product	Milligrams/liter
Pentachlorophenol	0.0072	(0.029)(59.9)/y
Trichlorophenol	0.0025	(0.010)(59.9)/y
y = wastewater discharged in kgal per ton of product.		

SUBPART L

[BAT effluent limitations for non-integrated mills where paperboard is produced from purchased pulp]

Pollutant or pollutant property	Maximum for any 1 day	
	Kg/kkg (or pounds per 1,000 lb) of product	Milligrams/liter
Pentachlorophenol	0.0016	(0.029)(12.9)/y
Trichlorophenol	0.00054	(0.010)(12.9)/y
y = wastewater discharged in kgal per ton of product.		

§ 430.125 New source performance standards (NSPS).

Any new source subject to this subpart must achieve the following new source performance standards (NSPS), except that non-continuous dischargers shall not be subject to the maximum day and average of 30 consecutive days effluent limitations for BOD5 and TSS, but shall be subject to annual average effluent limitations. Also, for non-continuous dischargers, concentration limitations (mg/l) shall apply, where provided. Concentration limitations will only apply to non-continuous dischargers. Only facilities where chlorophenolic-containing biocides are used shall be subject to pentachlorophenol and trichlorophenol limitations. Permittees not using chlorophenolic-containing biocides must certify to the permit-issuing authority that they are not using these biocides:

SUBPART L

[NSPS for non-integrated mills where tissue papers are produced from purchased pulp]

Pollutant or pollutant property	Kg/kkg (or pounds per 1,000 lb) of product		
	Continuous dischargers		Non-continuous dischargers (annual average)
	Maximum for any 1 day	Average of daily values for 30 consecutive days	
BOD5	7.0	3.4	2.3
TSS	6.0	2.6	1.6
pH	(1)	(1)	(1)

	Maximum for any 1 day	
	Kg/kkg (or pounds per 1,000 lb) of product	Milligrams/liter
Pentachlorophenol	0.0028	(0.035)(19.1)/y
Trichlorophenol	0.00096	(0.012)(19.1)/y
y = wastewater discharged in kgal per ton at all times.		

[1] Within the range of 5.0 to 9.0 at all times.

SUBPART L

[NSPS for non-integrated mills where filter and non-woven papers are produced from purchased pulp]

Pollutant or pollutant property	Kg/kkg (or pounds per 1,000 lb) of product		
	Continuous dischargers		Non-continuous dischargers (annual average)
	Maximum for any 1 day	Average of daily values for 30 consecutive days	
BOD5	17.1	8.3	5.6
TSS	15.0	6.6	4.0
pH	(1)	(1)	(1)

	Maximum for any 1 day	
	Kg/kkg (or pounds per 1,000 lb) of product	Milligrams/liter
Pentachlorophenol	0.0072	(0.037)(47.5)/y
Trichlorophenol	0.0025	(0.013)(47.5)/y
y = wastewater discharged in kgal per ton at all times.		

[1] Within the range of 5.0 to 9.0 at all times.

SUBPART L

[NSPS for non-integrated mills where paperboard is produced from purchased pulp]

Pollutant or pollutant property	Kg/kkg (or pounds per 1,000 lb) of product		
	Continuous dischargers		Non-continuous dischargers (annual average)
	Maximum for any 1 day	Average of daily values for 30 consecutive days	
BOD5	4.0	1.9	1.3
TSS	3.5	1.5	0.9
pH	(1)	(1)	(1)

	Maximum for any 1 day	
	Kg/kkg (or pounds per 1,000 lb) of product	Milligrams/liter
Pentachlorophenol	0.0016	(0.033)(11.2)/y
Trichlorophenol	0.00054	(0.012)(11.2)/y
y = wastewater discharged in kgal per ton at all times.		

(1) Within the range of 5.0 to 9.0 at all times.

§ 430.126 Pretreatment standards for existing sources (PSES).

Except as provided in 40 CFR 403.7 and 403.13, any existing source subject to this subpart that introduces pollutants into a publicly owned treatment works must: comply with 40 CFR part 403; and achieve the following pretreatment standards for existing sources (PSES) if it uses chlorophenolic-containing biocides. Permittees not using chlorophenolic-

containing biocides must certify to the permit-issuing authority that they are not using these biocides. PSES must be attained on or before July 1, 1984:

SUBPART L

[PSES for non-integrated mills where tissue papers are produced from purchased pulp]

Pollutant or pollutant property	Maximum for any 1 day	
	Milligrams/liter (mg/l)	Kg/kkg (or pounds per 1,000 lb) of product [a]
Pentachlorophenol	(0.032)(22.9)/y	0.0031
Trichlorophenol	(0.010)(22.9)/y	0.00096
y = wastewater discharged in kgal per ton of product.		

[a] The following equivalent mass limitations are provided as guidance in cases when POTWs find it necessary to impose mass effluent limitations.

SUBPART L

[PSES for non-integrated mills where filter and non-woven papers are produced from purchased pulp]

Pollutant or pollutant property	Maximum for any 1 day	
	Milligrams/liter (mg/l)	Kg/kkg (or pounds per 1,000 lb) of product [a]
Pentachlorophenol	(0.032)(59.9)/y	0.0080
Trichlorophenol	(0.010)(59.9)/y	0.0025
y = wastewater discharged in kgal per ton of product.		

[a] The following equivalent mass limitations are provided as guidance in cases when POTWs find it necessary to impose mass effluent limitations.

SUBPART L

[PSES for non-integrated mills where paperboard is produced from purchased pulp]

Pollutant or pollutant property	Maximum for any 1 day	
	Milligrams/liter (mg/l)	Kg/kkg (or pounds per 1,000 lb) of product [a]
Pentachlorophenol	(0.032)(12.9)/y	0.0017
Trichlorophenol	(0.010)(12.9)/y	0.00054
y = wastewater discharged in kgal per ton of product.		

[a] The following equivalent mass limitations are provided as guidance in cases when POTWs find it necessary to impose mass effluent limitations.

§ 430.127 Pretreatment standards for new sources (PSNS).

Except as provided in 40 CFR 403.7, any new source subject to this subpart that introduces pollutants into a publicly owned treatment works must: comply with 40 CFR part 403; and achieve the following pretreatment standards for new sources (PSNS) if it uses chlorophenolic-containing biocides. Permittees not using chlorophenolic-containing biocides must certify to the permit-issuing authority that they are not using these biocides:

SUBPART L

[PSNS for non-integrated mills where tissue papers are produced from purchased pulp]

Pollutant or pollutant property	Maximum for any 1 day	
	Milligrams/liter (mg/l)	Kg/kkg (or pounds per 1,000 lb) of product [a]
Pentachlorophenol	(0.038)(19.1)/y	0.0031
Trichlorophenol	(0.012)(19.1)/y	0.00096
y = wastewater discharged in kgal per ton of product.		

[a] The following equivalent mass limitations are provided as guidance in cases when POTWs find it necessary to impose mass effluent limitations.

SUBPART L

[PSNS for non-integrated mills where filter and non-woven papers are produced from purchased pulp]

Pollutant or pollutant property	Maximum for any 1 day	
	Milligrams/liter (mg/l)	Kg/kkg (or pounds per 1,000 lb) of product [a]
Pentachlorophenol	(0.040)(47.5)/y	0.0080
Trichlorophenol	(0.013)(47.5)/y	0.0025
y = wastewater discharged in kgal per ton of product.		

[a] The following equivalent mass limitations are provided as guidance in cases when POTWs find it necessary to impose mass effluent limitations.

SUBPART L

[PSNS for non-integrated mills where paperboard is produced from purchased pulp]

Pollutant or pollutant property	Maximum for any 1 day	
	Milligrams/liter (mg/l)	Kg/kkg (or pounds per 1,000 lb) of product [a]
Pentachlorophenol	(0.037)(11.2)/y	0.0017
Trichlorophenol	(0.012)(11.2)/y	0.00054
y = wastewater discharged in kgal per ton of product.		

[a] The following equivalent mass limitations are provided as guidance in cases when POTWs find it necessary to impose mass effluent limitations.

Appendix A to Part 430—Methods 1650 and 1653

Method 1650—Adsorbable Organic Halides by Adsorption and Coulometric Titration

1.0 Scope and Application

1.1 This method is for determination of adsorbable organic halides (AOX) associated with the Clean Water Act; the Resource Conservation and Recovery Act; the Comprehensive Environmental Response, Compensation, and Liability Act; and other organic halides amenable to combustion and coulometric titration. The method is designed to meet the survey and monitoring requirements of the Environmental Protection Agency (EPA).

1.2 The method is applicable to the determination of AOX in water and wastewater. This method is a combination of several existing methods for organic halide measurements (References 1 through 7).

1.3 The method can be used to measure organically-bound halides (chlorine, bromine, iodine) present in dissolved or suspended form. Results are reported as organic chloride (Cl^-). The detection limit of the method is usually dependent on interferences rather than instrumental limitations. A method detection limit (MDL; Reference 8) of 6.6 ∝g/L, and a minimum level (ML; Section 18) of 20 ∝g/L, can be achieved with no interferences present.

1.4 This method is for use by or under the supervision of analysts experienced in the use of a combustion/micro-coulometer. Each laboratory that uses this method must demonstrate the ability to generate acceptable results using the procedures described in Section 9.2.

1.5 Any modification of the method beyond those expressly permitted (Section 9.1.2) is subject to application and approval of an alternate test procedure under 40 CFR 136.4 and 136.5.

2.0 Summary of Method

2.1 Sample preservation: Residual chlorine that may be present is removed by the addition of sodium thiosulfate. Samples are adjusted to a pH < 2 and maintained at 0 to 4°C until analysis.

2.2 Sample analysis: Organic halide in water is determined by adsorption onto granular activated carbon (GAC), washing the adsorbed sample and GAC to remove inorganic halide, combustion of the sample and GAC to form the hydrogen halide, and titration of the hydrogen halide with a micro-coulometer, as shown in Figure 1.

2.3 Micro-coulometer.

2.3.1 This detector operates by maintaining a constant silver-ion concentration in a titration cell. An electric potential is applied to a solid silver electrode to produce silver ions in the cell. As hydrogen halide produced from the combustion of organic halide enters the cell, it is partitioned into an acetic acid electrolyte where it precipitates as silver halide. The current produced is integrated over the combustion period. The electric charge is proportional to the number of moles of halogen captured in the cell (Reference 6).

2.3.2 The mass concentration of organic halides is reported as an equivalent concentration of organically bound chloride (Cl^-).

3.0 Definitions

3.1 Adsorbable organic halides is defined as the analyte measured by this method. The nature of the organo-halides and the presence of semi-extractable material will influence the amount measured and interpretation of results.

3.2 Definitions for terms used in this method are given in the glossary at the end of the method (Section 18).

4.0 Interferences

4.1 Solvents, reagents, glassware, and other sample processing hardware may yield elevated readings from the micro-coulometer. All materials used in the analysis shall be demonstrated to be free from interferences under the conditions of analysis by running method blanks initially and with each sample batch (samples started through the adsorption process in a given eight-hour shift, to a maximum of 20 samples). Specific selection of reagents and purification of solvents may be required.

4.2 Glassware is cleaned by detergent washing in hot water, rinsing with tap water and distilled water, capping with aluminum foil, and baking at 450°C for at least one hour. For some glassware, immersion in a chromate cleaning solution prior to detergent washing may be required. If blanks from glassware without cleaning or with fewer cleaning steps show no detectable organic halide, the cleaning steps that do not eliminate organic halide may be omitted.

4.3 Most often, contamination results from methylene chloride vapors in laboratories that perform organic extractions. Heating, ventilating, and air conditioning systems that are shared between the extraction laboratory and the laboratory in which organic halide measurements are performed transfer the methylene chloride vapors to the air in the organic halide laboratory. Exposure of the activated carbon

used in the analysis results in contamination. Separate air handling systems, charcoal filters, and glove boxes can be used to minimize this exposure.

4.4 Activated carbon.

4.4.1 The purity of each lot of activated carbon must be verified before each use by measuring the adsorption capacity and the background level of halogen (Section 9.5). The stock of activated carbon should be stored in its granular form in a glass container that is capped tightly. Protect carbon at all times from sources of halogen vapors.

4.4.2 Inorganic substances such as chloride, chlorite, bromide, and iodide will adsorb on activated carbon to an extent dependent on their original concentration in the aqueous solution and the volume of sample adsorbed. Treating the activated carbon with a solution of nitrate causes competitive desorption of inorganic halide species. However, if the inorganic halide concentration is greater than 2,000 times the organic halide concentration, artificially high results may be obtained.

4.4.3 Halogenated organic compounds that are weakly adsorbed on activated carbon are only partially recovered from the sample. These include certain alcohols and acids such as chloroethanol and chloroacetic acid that can be removed from activated carbon by the nitrate wash.

4.5 Polyethylene gloves should be worn when handling equipment surfaces in contact with the sample to prevent transfer of contaminants that may be present on the hands.

5.0 Safety

5.1 The toxicity or carcinogenicity of each reagent used in this method has not been precisely determined; however, each chemical substance should be treated as a potential health hazard. Exposure to these substances should be reduced to the lowest possible level. The laboratory is responsible for maintaining a current awareness file of OSHA regulations regarding the safe handling of the chemicals specified in this method. A reference file of material safety data sheets (MSDSs) should be made available to all personnel involved in the chemical analysis. Additional information on laboratory safety can be found in References 9 through 11.

5.2 This method employs strong acids. Appropriate clothing, gloves, and eye protection should be worn when handling these substances.

5.3 Field samples may contain high concentrations of toxic volatile compounds. Sample containers should be opened in a hood and handled with gloves that will prevent exposure.

6.0 Equipment and Supplies

Note: Brand names, suppliers, and part numbers are for illustrative purposes only. No endorsement is implied. Equivalent performance may be achieved using apparatus and materials other than those specified here, but demonstration of equivalent performance that meets the requirements of this method is the responsibility of the laboratory.

6.1 Sampling equipment.

6.1.1 Bottles: 100- to 4000-mL, amber glass, sufficient for all testing (Section 8.2). Detergent water wash, chromic acid rinse, rinse with tap and distilled water, cover with aluminum foil, and heat to 450°C for at least one hour before use.

6.1.2 PTFE liner: Cleaned as above and baked at 100 to 200°C for at least one hour.

6.1.3 Bottles and liners must be lot certified to be free of organic halide by running blanks according to this method.

6.2 Scoop for granular activated carbon (GAC): Capable of precisely measuring 40 mg (±5 mg) GAC (Dohrmann Measuring Cup 521–021, or equivalent).

6.3 Batch adsorption and filtration system.

6.3.1 Adsorption system: Rotary shaker, wrist action shaker, ultrasonic system, or other system for assuring thorough contact of sample with activated carbon. Systems different from the one described below must be demonstrated to meet the performance requirements in Section 9 of this method.

6.3.1.1 Erlenmeyer flasks: 250- to 1500-mL with ground-glass stopper, for use with rotary shaker.

6.3.1.2 Shake table: Sybron Thermolyne Model LE "Big Bill" rotator/shaker, or equivalent.

6.3.1.3 Rack attached to shake table to permit agitation of 16 to 25 samples simultaneously.

6.3.2 Filtration system (Figure 2).

6.3.2.1 Vacuum filter holder: Glass, with fritted-glass support (Fisher Model 09–753E, or equivalent).

6.3.2.2 Polycarbonate filter: 0.40 to 0.45 micron, 25-mm diameter (Micro Separations Inc, Model K04CP02500, or equivalent).

6.3.2.3 Filter forceps: Fisher Model 09–753–50, or equivalent, for handling filters. Two forceps may better aid in handling filters. Clean by washing with detergent and water, rinsing with tap and deionized water, and air drying on aluminum foil.

6.3.2.4 Vacuum flask: 500- to 1500-mL (Fisher 10–1800, or equivalent).

6.3.2.5 Vacuum Source: A pressure/vacuum pump, rotary vacuum pump, or other vacuum source capable of providing at least 610 mm (24 in.) Hg vacuum at 30 L/min free air displacement.

6.3.2.6 Stopper and tubing to mate the filter holder to the flask and the flask to the pump.

6.3.2.7 Polyethylene gloves: (Fisher 11–394–110–B, or equivalent).

6.4 Column adsorption system.

6.4.1 Adsorption module: Dohrmann AD–2, Mitsubishi TXA–2, or equivalent with pressurized sample and nitrate-wash reservoirs, adsorption columns, column housings, gas and gas pressure regulators, and receiving vessels. For each sample reservoir, there are two adsorption columns connected in series. A small steel funnel for filling the columns and a rod for pushing out the carbon are also required. A schematic of the column adsorption system is shown in Figure 3.

6.4.2 Adsorption columns: Pyrex, 5 ± 0.2 cm long 2 mm ID, to hold 40 mg of granular activated carbon (GAC).

6.4.3 Cerafelt: Johns-Manville, or equivalent, formed into plugs using stainless steel borer (2 mm ID) with ejection rod (available from Dohrmann or Mitsubishi) to hold 40 mg of granular activated carbon (GAC). Caution: Handle Cerafelt with gloves.

6.4.4 Column holders: To support adsorption columns.

6.5 Combustion/micro-coulometer system: Commercially available as a single unit or assembled from parts. At the time of the writing of this method, organic halide units were commercially available from the Dohrmann Division of Rosemount Analytical, Santa Clara, California; Euroglas BV, Delft, the Netherlands; and Mitsubishi Chemical Industries, Ltd., Tokyo, Japan.

6.5.1 Combustion system: Older systems may not have all of the features shown in Figure 4. These older systems may be used provided the performance requirements (Section 9) of this method are met.

6.5.1.1 Combustion tube: Quartz, capable of being heated to 800 to 1000 °C and accommodating a boat sampler. The tube must contain an air lock for introduction of a combustion boat, connections for purge and combustion gas, and connection to the micro-coulometer cell.

6.5.1.2 Tube furnace capable of controlling combustion tube in the range of 800 to 1000 °C.

6.5.1.3 Boat sampler: Capable of holding 35 to 45 mg of activated carbon and a polycarbonate filter, and fitting into the combustion tube (Section 6.5.1.1). Some manufacturers offer an enlarged boat and combustion tube for this purpose. Under a time-controlled sequence, the boat is first moved into an evaporation zone where water and other volatiles are evaporated, and then into the combustion zone where the carbon and all other organic material in the boat are burned in a flowing oxygen stream. The evolved gases are transported by a non-reactive carrier gas to the micro-coulometer cell.

6.5.1.4 Motor driven boat sampler: Capable of advancing the combustion boat into the furnace in a reproducible time sequence. A suggested time sequence is as follows:

A. Establish initial gas flow rates: 160 mL/min CO_2; 40 mL/min O_2.

B. Sequence start.

C. Hold boat in hatch for five seconds to allow integration for baseline subtraction.

D. Advance boat into vaporization zone.

E. Hold boat in vaporization zone for 110 seconds.

F. Establish gas flow rates for combustion: 200 mL/min O_2; 0 mL/min CO_2; advance boat into pyrolysis zone (800°C).

G. Hold boat in pyrolysis zone for six minutes.

H. Return gas flow rates to initial values; retract boat into hatch to cool and to allow remaining HX to be swept into detector (approximately two minutes).

I. Stop integration at 10 minutes after sequence start.

Note: If the signal from the detector does not return to baseline, it may be necessary to extend the pyrolysis time.The sequence above may need to be optimized for each instrument.

6.5.1.5 Absorber: Containing sulfuric acid to dry the gas stream after combustion to

prevent backflush of electrolyte is highly recommended.

6.5.2 Micro-coulometer system: Capable of detecting the equivalent of 0.2 ∝g of Cl^- at a signal-to-noise ratio of 2; capable of detecting the equivalent of 1 ∝g of Cl^- with a relative standard deviation less than 10%, and capable of accumulating a minimum of the equivalent of 500 ∝g of Cl^- before a change of electrolyte is required.

6.5.2.1 Micro-coulometer cell: The three cell designs presently in use are shown in Figure 1. Cell operation is described in Section 2.

6.5.2.2 Cell controller: Electronics capable of measuring the small currents generated in the cell and accumulating and displaying the charge produced by hydrogen halides entering the cell. A strip-chart recorder is desirable for display of accumulated charge.

6.6 Miscellaneous glassware: nominal sizes are specified below; other sizes may be used, as necessary.

6.6.1 Volumetric flasks: 5-, 10-, 25-, 50-, 100-, and 1000-mL.

6.6.2 Beakers: 100-, 500-, and 1000-mL.

6.6.3 Volumetric pipets: 1- and 10-mL with pipet bulbs.

6.6.4 Volumetric micro-pipets: 10-, 20-, 50-, 100-, 200-, and 500-∝L with pipet control (Hamilton 0010, or equivalent).

6.6.5 Graduated cylinders: 10-, 100-, and 1000-mL.

6.7 Micro-syringes: 10-, 50-, and 100-∝L.

6.8 Balances.

6.8.1 Top-loading, capable of weighing 0.1 g.

6.8.2 Analytical, capable of weighing 0.1 mg.

6.9 pH meter.

6.10 Wash bottles: 500- to 1000-mL, PTFE or polyethylene.

6.11 Strip-chart recorder: suggested but not required—useful for determining end of integration (Section 11.4.2).

7.0 Reagents and Standards

7.1 Granular activated carbon (GAC): 75 to 150 ∝m (100 to 200 mesh); (Dohrmann, Mitsubishi, Carbon Plus, or equivalent), with chlorine content less than 1 ∝g Cl^- per scoop (< 25 ∝g Cl^- per gram), adsorption capacity greater than 1000 ∝g Cl^- (as 2,4,6-trichlorophenol) per scoop (>25,000 ∝g/g), inorganic halide retention of less than 1 ∝g Cl^- per scoop in the presence of 10 mg of inorganic halide (< 20 ∝g Cl^- per gram in the presence of 2500 mg of inorganic halide), and that meets the other test criteria in this method.

7.2 Reagent water: Water in which organic halide is not detected by this method.

7.2.1 Preparation: Reagent water may be generated by:

7.2.1.1 Activated carbon: Pass tap water through a carbon bed (Calgon Filtrasorb-300, or equivalent).

7.2.1.2 Water purifier: Pass tap water through a purifier (Millipore Super Q, or equivalent).

7.2.2 pH adjustment: Adjust the pH of the reagent water to < 2 with nitric acid for all reagent water used in this method, except for the acetic acid solution (Section 7.13).

7.3 Nitric acid (HNO_3): Concentrated, analytical grade.

7.4 Sodium chloride (NaCl) solution (100 ∝g/mL of Cl^-): Dissolve 0.165g NaCl in 1000 mL reagent water. This solution is used for cell testing and for the inorganic halide rejection test.

7.5 Ammonium chloride (NH_4Cl) solution (100 ∝g/mL of Cl^-): Dissolve 0.1509 g NH_4Cl in 1000 mL reagent water.

7.6 Sulfuric acid: Reagent grade (specific gravity 1.84).

7.7 Oxygen: 99.9% purity.

7.8 Carbon Dioxide: 99.9% purity.

7.9 Nitrate stock solution: In a 1000-mL volumetric flask, dissolve 17g of $NaNO_3$ in approximately 100 mL of reagent water, add 1.4 mL nitric acid (Section 7.3) and dilute to the mark with reagent water.

7.10 Nitrate wash solution: Dilute 50 mL of nitrate stock solution (Section 7.9) to 1000 mL with reagent water.

7.11 Sodium thiosulfate ($Na_2S_2O_3$) solution (1 N): Weigh 79 grams of $Na_2S_2O_3$ in a 1-L volumetric flask and dilute to the mark with reagent water.

7.12 Trichlorophenol solutions.

Note: The calibration solutions in this section employ 100-mL volumes. For determinations requiring a larger or smaller volume, increase or decrease the size of the volumetric flasks commensurately. For example, if a 1-L sample is to be analyzed, use 1000-mL flasks (Sections 7.12.3.1 and 7.12.4) and 10 times the volume of reagent water (Sections 7.12.3.1 and 7.12.4). The volume of stock solution added to the calibration solutions and precision and recovery (PAR) test solution remain as specified (Sections 7.12.3.2 and 7.12.4) so that the same amount of chloride is delivered to the coulometric cell regardless of the volume of the calibration and PAR solutions.

7.12.1 Methanol: HPLC grade.

7.12.2 Trichlorophenol stock solution (1.0 mg/mL of Cl^-): Dissolve 0.186 g of 2,4,6-trichlorophenol in 100 mL of halide-free methanol.

7.12.3 Trichlorophenol calibration solutions.

7.12.3.1 Place approximately 90 mL of reagent water in each of five 100-mL volumetric flasks.

7.12.3.2 Using a calibrated micro-syringe or micro-pipets, add 2, 5, 10, 30, and 80 ∝L of the trichlorophenol stock solution (Section 7.12.2) to the volumetric flasks and dilute each to the mark with reagent water to produce calibration solutions of 2, 5, 10, 30, and 80 ∝g Cl^- per 100 mL of solution (20, 50, 100, 300, and 800 ∝g/L).

7.12.3.3 Some instruments may have a calibration range that does not extend to 800 ∝g/L (80 ∝g of Cl^-). For those instruments, a narrower dynamic range may be used. However, if the concentration of halide in a sample exceeds that range, the sample must be diluted to bring the concentration within the range calibrated.

7.12.4 Trichlorophenol precision and recovery (PAR) test solution (10 ∝g/L of Cl^-): Partially fill a 100-mL volumetric flask, add 10 ∝L of the stock solution (Section 7.12.2), and dilute to the mark with reagent water.

7.13 Acetic acid solution: Containing 30 to 70% acetic acid in deionized water, per the instrument manufacturer's instructions.

8.0 Sample Collection, Preservation, and Storage

8.1 Sample preservation.

8.1.1 Residual chlorine: If the sample is known or suspected to contain free chlorine, the chlorine must be reduced to eliminate positive interference that may result from continued chlorination reactions. A knowledge of the process from which the sample is collected may be of value in determining whether dechlorination is necessary. Immediately after sampling, test for residual chlorine using the following method or an alternative EPA method (Reference 12):

8.1.1.1 Dissolve a few crystals of potassium iodide in the sample and add three to five drops of a 1% starch solution. A blue color indicates the presence of residual chlorine.

8.1.1.2 If residual chlorine is found, add 1 mL of sodium thiosulfate solution (Section 7.11) for each 2.5 ppm of free chlorine or until the blue color disappears. Do not add an excess of sodium thiosulfate. Excess sodium thiosulfate may cause decomposition of a small fraction of the OX.

8.1.2 Acidification: Adjust the pH of aqueous samples to < 2 with nitric acid. Acidification inhibits biological activity and stabilizes chemical degradation, including possible dehalogenation reactions that may occur at high pH. Acidification is necessary to facilitate thorough adsorption.

8.1.3 Refrigeration: Maintain samples at a temperature of 0 to 4YC from time of collection until analysis.

8.2 Collect the amount of sample necessary for analysis (Section 11) and all QC tests (Section 9) in an amber glass bottle of the appropriate size (Section 6.1.1).

8.3 Analyze samples no less than three days nor more than six months after collection.

9.0 Quality Control

9.1 Each laboratory that uses this method is required to operate a formal quality assurance program. The minimum requirements of this program consist of an initial demonstration of laboratory capability, an ongoing analysis of standards and blanks as tests of continued performance, and analysis of matrix spike and matrix spike duplicate (MS/MSD) samples to assess accuracy and precision. Laboratory performance is compared to established performance criteria to determine if the results of analyses meet the performance characteristics of the method.

9.1.1 The laboratory shall make an initial demonstration of the ability to produce acceptable results with this method. This ability is demonstrated as described in Section 9.2.

9.1.2 The laboratory is permitted to modify this method to improve separations or lower the costs of measurements, provided that all performance specifications are met. Each time a modification is made to the method, the laboratory is required to repeat the procedures in Sections 9.2.2 and 10 to demonstrate continued method performance. If the detection limit of the method will be affected by the modification, the laboratory should demonstrate that the MDL (40 CFR

136, Appendix B) is less than or equal to the MDL in this method or one-third the regulatory compliance level, whichever is higher.

9.1.3 The laboratory shall spike 10% of the samples with known concentrations of 2,4,6-trichlorophenol to monitor method performance and matrix interferences (interferences caused by the sample matrix). This test is described in Section 9.3. When results of these spikes indicate atypical method performance for samples, the samples are diluted to bring method performance within acceptable limits.

9.1.4 Analyses of blanks are required to demonstrate freedom from contamination. The procedures and criteria for analysis of blanks are described in Section 9.4.

9.1.5 The laboratory shall, on an ongoing basis, demonstrate through the analysis of the precision and recovery (PAR) standard that the analysis system is in control. These procedures are described in Section 9.10.

9.1.6 The laboratory shall perform quality control tests on the granular activated carbon. These procedures are described in Section 9.5.

9.1.7 Samples are analyzed in duplicate to demonstrate precision. These procedures are described in Section 9.6.

9.2 Initial demonstration of laboratory capability.

9.2.1 Method Detection Limit (MDL): To establish the ability to detect AOX, the laboratory should determine the MDL per the procedure in 40 CFR 136, Appendix B using the apparatus, reagents, and standards that will be used in the practice of this method. An MDL less than or equal to the MDL in Section 1.3 should be achieved prior to the practice of this method.

9.2.2 Initial precision and recovery (IPR): To establish the ability to generate acceptable precision and recovery, the laboratory shall perform the following operations:

9.2.2.1 Analyze four aliquots of the PAR standard (Section 7.12.4) and a method blank according to the procedures in Sections 9.4 and 11.

9.2.2.2 Using the blank-subtracted results of the set of four analyses, compute the average percent recovery (X) and the standard deviation of the percent recovery (s) for the results.

9.2.2.3 The average percent recovery shall be in the range of 81 to 114 ∝g/L and the standard deviation shall be less than 8 ∝g/L. If X and s meet these acceptance criteria, system performance is acceptable and analysis of blanks and samples may begin. If, however, s exceeds the precision limit or X falls outside the range for recovery, system performance is unacceptable. In this case, correct the problem and repeat the test.

9.3 Matrix spikes: The laboratory shall spike a minimum of 10% of samples from a given matrix type (e.g., C-stage filtrate, produced water, treated effluent) in duplicate (MS/MSD). If only one sample from a given matrix type is analyzed, an additional two aliquots of that sample shall be spiked.

9.3.1 The concentration of the analytes spiked into the MS/MSD shall be determined as follows:

9.3.1.1 If, as in compliance monitoring, the concentration of OX is being checked against a regulatory concentration limit, the spiking level shall be at that limit or at one to five times higher than the background concentration determined in Section 9.3.2, whichever concentration is higher.

9.3.1.2 If the concentration of OX is not being checked against a regulatory limit, the spike shall be at the concentration of the precision and recovery standard (PAR; Section 7.12.4) or at one to five times higher than the background concentration determined in Section 9.3.2, whichever concentration is higher.

9.3.2 Analyze one sample out of each batch of 10 samples from each site to determine the background concentration of AOX. If necessary, prepare a solution of 2,4,6-trichlorophenol appropriate to produce a level in the sample one to five times the background concentration. Spike two additional sample aliquots with spiking solution and analyze them to determine the concentration after spiking.

9.3.2.1 Compute the percent recovery of each analyte in each aliquot:

$$\% \text{ Recovery} = \frac{100\,(\text{Found} \quad \text{Background})}{T}$$

where:

T is the true value of the spike

9.3.2.2 Compute the relative percent difference (RPD) between the two results (not between the two recoveries) as described in Section 12.4.

9.3.2.3 If the RPD is less than 20%, and the recoveries for the MS and MSD are within the range of 78 to 116%, the results are acceptable.

9.3.2.4 If the RPD is greater than 20%, analyze two aliquots of the precision and recovery standard (PAR).

9.3.2.4.1 If the RPD for the two aliquots of the PAR is greater than 20%, the analytical system is out of control. In this case, repair the problem and repeat the analysis of the sample batch, including the MS/MSD.

9.3.2.4.2 If, however, the RPD for the two aliquots of the PAR is less than 20%, dilute the sample chosen for the MS/MSD by a factor of 2–10 (to remain within the working range of the analytical system) and repeat the MS/MSD test. If the RPD is still greater than 20%, the result may not be reported for regulatory compliance purposes. In this case, choose another sample for the MS/MSD and repeat analysis of the sample batch.

9.3.2.5 If the percent recovery for both the MS and MSD are less than 78% or greater than 116%, analyze the precision and recovery (PAR) standard.

9.3.2.5.1 If the recovery of the PAR is outside the 78 to 116% range, the analytical system is out of control. In this case, repair the problem and repeat the analysis of the sample batch, including the MS/MSD.

9.3.2.5.2 If the recovery of the PAR is within the range of 78 to 116%, dilute the sample, MS, and MSD by a factor of 2–10 (to remain within the working range of the analytical system) and re-analyze. If the results of the dilute analyses remain outside of the acceptable range, these results may not be reported for regulatory compliance purposes. In this case, choose another sample for the MS/MSD and repeat the analysis of the sample batch.

9.4 Blanks.

9.4.1 Reagent water blanks: Analyzed to demonstrate freedom from contamination.

9.4.1.1 Analyze a reagent water blank with each batch of samples. The blank must be analyzed immediately preceding calibration verification to allow for blank subtraction and to demonstrate freedom from contamination and memory effects, and must include all details of the procedure to be followed when analyzing samples.

9.4.1.2 Prepare the reagent water blank using a volume of reagent water equivalent to the volume used for sample preparation (Section 11.1). If using the micro-column procedure, adsorb the method blank using two columns, as described in Section 11. Combust the GAC from each column separately, as described in Section 11.

9.4.1.3 If the result from the blank from the batch method or the sum of the results from two columns is more than 20 ∝g/L, analysis of samples is halted until the source of contamination is eliminated and a blank shows no evidence of contamination at this level.

9.4.2 Nitrate-washed GAC blanks: Analyzed daily to demonstrate that the GAC is free from contamination.

9.4.2.1 Nitrate-washed GAC blank for the batch procedure: Analyze a batch nitrate-washed GAC blank by adding a scoop of dry GAC to the assembled filter apparatus containing the polycarbonate membrane and washing the GAC with the nitrate wash solution (Section 7.10) using the procedure in Section 11.2.6.

9.4.2.2 Nitrate-washed GAC blank for the column procedure: Analyze a column nitrate-washed GAC blank by assembling two carbon columns in series and washing the columns with the nitrate wash solution (Section 7.10) using the procedure in Section 11.3.4.2. Analyze the GAC in each column separately. The results of the second analysis must be within ±0.2 ∝g Cl^- of the first. A difference greater than 0.2 ∝g Cl^- indicates a lack of homogeneity in the GAC that could introduce unacceptable variability. If the difference exceeds this amount, the GAC should be replaced.

9.4.3 The result for the reagent water blank (Section 9.4.1) shall not exceed the result for the nitrate wash blank (Section 9.4.2.1 or 9.4.2.2) by more than 0.5 ∝g Cl^-.

9.5 Granular activated carbon (GAC) batch testing: Each lot number or batch of activated carbon received from a supplier is tested once before use to ensure adequate quality. Use only GAC that meets the test criteria below.

9.5.1 Contamination test: Analyze a scoop of GAC. Reject carbon if the amount of OX exceeds 1 ∝g (25 ∝g Cl^-/g).

9.5.2 Inorganic chloride adsorption test: Attempt to adsorb NaCl from 100 mL of a solution containing 100 mg/L in reagent water. Wash with nitrate solution and analyze. The amount of halide should be less than 1 ∝g Cl^- larger than the blank. A larger amount indicates significant uptake of inorganic chloride by the carbon. Reject carbon if the 1 ∝g level is exceeded.

9.6 Samples that are being used for regulatory compliance purposes shall be analyzed in duplicate.

9.6.1 The procedure for preparing duplicate sample aliquots is described in Section 11.5.

9.6.2 Calculate the RPD by following the same procedure described in Section 12.4.

9.6.3 If the RPD is greater than 20%, the analyses must be repeated.

9.6.4 If the RPD remains greater than 20%, the result may not be reported for regulatory compliance purposes.

9.7 The specifications in this method can be met if the apparatus used is calibrated properly and maintained in a calibrated state. The standards used for calibration (Section 10), calibration verification (Section 9.9), and for initial (Section 9.2.2) and ongoing (Section 9.10) precision and recovery should be identical, so that the most precise results will be obtained.

9.8 Depending on specific program requirements, field duplicates may be collected to determine the precision of the sampling technique.

9.9 At the beginning and end of each eight-hour shift during which analyses are performed, system performance and calibration are verified. Verification of system performance and calibration may be performed more frequently, if desired.

9.9.1 If performance and calibration are verified at the beginning and end of each shift (or more frequently), samples analyzed during that period are considered valid.

9.9.2 If performance and calibration are not verified at both the beginning and end of a shift (or more frequently), samples analyzed during that period must be reanalyzed.

9.9.3 If calibration is verified at the beginning of a shift, recalibration using the five standards described in Section 10.6 is not necessary; otherwise, the instrument must be recalibrated prior to analyzing samples (Section 10).

9.9.4 Cell maintenance and other changes to the analytical system that can affect system performance may not be performed during the eight-hour (or shorter) shift.

9.10 Calibration verification and ongoing precision and recovery: Calibration and system performance are verified by the analysis of the 100 ∝g/L PAR standard.

9.10.1 Analyze a blank (Section 9.4) and analyze the PAR standard (Section 7.12.4) immediately thereafter at the beginning and end of each shift. Compute the concentration of organic halide in the blank and in the PAR standard using the procedures in Section 12. The blank shall be less than 2 ∝g Cl^- (20 ∝g/L equivalent).

9.10.2 Subtract the result for the blank from the result of the PAR standard using the procedures in Section 12, and compute the percent recovery of the blank-subtracted PAR standard. The percent recovery shall be in the range of 78 to 116%.

9.10.3 If the recovery is within this range, the analytical process is in control and analysis of blanks and samples may proceed. If, however, the recovery is not within the acceptable range, the analytical process is not in control. In this event, correct the problem and repeat the ongoing precision and recovery test (Section 9.10), or recalibrate (Sections 10.5 through 10.6).

9.10.4 If the recovery is not within the acceptable range for the PAR standard analyzed at the end of the eight-hour shift, correct the problem, repeat the ongoing precision and recovery test (Section 9.10), or recalibrate (Sections 10.5 through 10.6), and reanalyze the sample batch that was analyzed during the eight-hour shift.

9.10.5 If the recovery is within the acceptable range at the end of the shift, and samples are to be analyzed during the next eight-hour shift, the end of shift verification may be used as the beginning of shift verification for the subsequent shift, provided the next eight-hour shift begins as the first shift ends.

9.11 It is suggested but not required that the laboratory develop a statement of data quality for AOX and develop QC charts to form a graphic demonstration of method performance. Add results that pass the specification in Section 9.10.2 to initial and previous ongoing data. Develop a statement of data quality by calculating the average percent recovery (R) and the standard deviation of percent recovery (s_r). Express the accuracy as a recovery interval from $R - 2s_r$ to $R + 2s_r$. For example, if R=95% and s_r=5%, the accuracy is 85 to 105%.

10.0 Calibration and Standardization

10.1 Assemble the OX system and establish the operating conditions necessary for analysis. Differences between various makes and models of instruments will require different operating procedures. Laboratories should follow the operating instructions provided by the manufacturer of their particular instrument. Sensitivity, instrument detection limit, precision, linear range, and interference effects must be investigated and established for each particular instrument. Calibration is performed when the instrument is first set up and when calibration cannot be verified (Section 9.9).

10.2 Cell performance test: Inject 100 ∝L of the sodium chloride solution (10 ∝g Cl^-; Section 7.4) directly into the titration cell electrolyte. Adjust the instrument to produce a reading of 10 ∝g Cl^-.

10.3 Combustion system test: This test can be used to assure that the combustion/micro-coulometer systems are performing properly without introduction of carbon. This test should be used during initial instrument setup and when instrument performance indicates a problem with the combustion system.

10.3.1 Designate a quartz boat for use with the ammonium chloride (NH_4Cl) solution only.

10.3.2 Inject 100 ∝L of the NH_4Cl solution (Section 7.5) into this boat and proceed with the analysis.

10.3.3 The result shall be between 9.5 and 10.5 ∝g Cl^-. If the recovery is not between these limits, the combustion or micro-coulometer systems are not performing properly. Check the temperature of the combustion system, verify that there are no leaks in the combustion system, confirm that the cell is performing properly (Section 10.2), and then repeat the test.

10.4 Trichlorophenol combustion test: This test can be used to assure that the combustion/micro-coulometer systems are performing properly when carbon is introduced. It should be used during instrument setup and when it is necessary to isolate the adsorption and combustion steps.

10.4.1 Inject 10 ∝L of the 1 mg/mL trichlorophenol stock solution (Section 7.12.2) onto one level scoop of GAC in a quartz boat.

10.4.2 Immediately proceed with the analysis to prevent loss of trichlorophenol and to prevent contamination of the carbon.

10.4.3 The result shall be between 9.0 and 11.0 ∝g Cl^-. If the recovery is not between these limits, the combustion/micro-coulometer system shall be adjusted and the test repeated until the result falls within these limits.

10.5 Background level of Cl^-: Determine the average background level of Cl^- for the entire analytical system as follows:

10.5.1 Using the procedure in Section 11 (batch or column) that will be used for the analysis of samples, determine the background level of Cl^- in each of three portions of reagent water. The volume of reagent water used shall be the same as the volume used for analysis of samples.

10.5.2 Calculate the average (mean) concentration of Cl^- and the standard deviation of the concentration.

10.5.3 The sum of the average concentration plus two times the standard deviation of the concentration shall be less than 20 ∝g/L. If not, the water or carbon shall be replaced, or the adsorption system moved to an area free of organic halide vapors, and the test (Section 10.5) shall be repeated. Only after this test is passed may calibration proceed.

10.6 Calibration by external standard: A calibration line encompassing the calibration range is developed using solutions of 2,4,6-trichlorophenol.

10.6.1 Analyze each of the five calibration solutions (Section 7.12.3) using the procedure in Section 11 (batch or column) that will be used for the analysis of samples, and the same procedure that was used for determination of the system background (Section 10.5). Analyze these solutions beginning with the lowest concentration and proceeding to the highest. Record the response of the micro-coulometer to each calibration solution.

10.6.2 Prepare a method blank as described in Section 9.4. Subtract the value of the blank from each of the five calibration results, as described in Section 12.

10.6.3 Calibration factor (ratio of response to concentration) Using the blank subtracted results, compute the calibration factor at each calibration point, and compute the average calibration factor and the relative standard deviation (coefficient of variation; Cv) of the calibration factor over the calibration range.

10.6.4 Linearity: The Cv of the calibration factor shall be less than 20%; otherwise, the calibration shall be repeated after adjustment of the combustion/micro-coulometer system and/or preparation of fresh calibration standards.

10.6.5 Using the average calibration factor, compute the percent recovery at each calibration point. The recovery at each calibration point shall be within the range of 80 to 111%. If any point is not within this range, a fresh calibration standard shall be

prepared for that point, this standard shall be analyzed, and the calibration factor (Section 10.6.3) and calibration linearity (Section 10.6.4) shall be computed using the new calibration point. All points used in the calibration must meet the 80 to 111% recovery specification.

11.0 Procedure

11.1 Sample dilution: Many samples will contain high concentrations of halide. If analyzed without dilution, the micro-coulometer can be overloaded, resulting in frequent cell cleaning and downtime. The following guidance is provided to assist in estimating dilution levels.

11.1.1 Paper and pulp mills that employ chlorine bleaching: Samples from pulp mills that use a chlorine bleaching process may overload the micro-coulometer. To prevent system overload, the maximum volume suggested for paper industry samples that employ halide in the bleaching process is 100 mL. An adsorption volume as small as 25 mL may be used, provided the concentration of AOX in the sample can be measured reliably, as defined by the requirements in Section 9.11. To minimize volumetric error, an adsorption volume less than 25 mL may not be used. If AOX cannot be measured reliably in a 100-mL sample volume, a sample volume to a maximum of 1000 mL must be used. The sample and adsorption volumes are suggested for paper industry samples employing chlorine compounds in the bleaching process:

Paper or pulp mill stream	Sample volume (mL)*	Adsorption volume (mL)
Evaporator condensate	100.0	100
Process water	100.0	100
Pulp mill effluent	30.0	50
Paper mill effluent	10.0	25
Combined mill effluent	5.0	25
Combined bleach effluent	1.0	25
C-stage filtrate	0.5	25
E-stage filtrate	0.5	25

* Assumes dilution to final volume of 100 mL. All sample aliquots (replicates, diluted samples) must be analyzed using the same fixed final volume (sample volume plus reagent water, as needed).

11.1.2 Sample dilution procedure.

11.1.2.1 Partially fill a precleaned volumetric flask with pH < 2 reagent water, allowing for the volume of sample to be added.

11.1.2.2 Mix sample thoroughly by tumbling or shaking vigorously.

11.1.2.3 Immediately withdraw the required sample aliquot using a pipet or micro-syringe.

Note: Because it will be necessary to rinse the pipet or micro-syringe (Section 11.1.2.5), it may be necessary to pre-calibrate the pipet or micro-syringe to assure that the exact volume desired will be delivered.

11.1.2.4 Dispense or inject the aliquot into the volumetric flask.

11.1.2.5 Rinse the pipet or syringe with small portions of reagent water and add to the flask.

11.1.2.6 Dilute to the mark with pH < 2 reagent water.

11.1.3 All samples to be reported for regulatory compliance monitoring purposes must be analyzed in duplicate, as described in Section 11.5.

11.1.4 Pulp and Paper in-process samples: The concentration of organic halide in in-process samples has been shown to be 20 to 30% greater using the micro-column adsorption technique than using the batch adsorption technique. For this reason, the micro-column technique shall be used for monitoring in-process samples. Examples of in-process samples include: combined bleach plant effluent, C-stage filtrate, and E-stage filtrate.

11.2 Batch adsorption and filtration.

11.2.1 Place the appropriate volume of sample (diluted if necessary), preserved as described in Section 8, into an Erlenmeyer flask.

11.2.2 Add 5 mL of nitrate stock solution to the sample aliquot.

11.2.3 Add one level scoop of activated carbon that has passed the quality control tests in Section 9.

11.2.4 Shake the suspension for at least one hour in a mechanical shaker.

11.2.5 Filter the suspension through a polycarbonate membrane filter. Filter by suction until the liquid level reaches the top of the carbon.

11.2.6 Wash the inside surface of the filter funnel with 25 mL (±5 mL) of nitrate wash solution in several portions. After the level of the final wash reaches the top of the GAC, filter by suction until the cake is barely dry. The time required for drying should be minimized to prevent exposure of the GAC to halogen vapors in the air, but should be sufficient to permit drying of the cake so that excess water is not introduced into the combustion apparatus. A drying time of approximately 10 seconds under vacuum has been shown to be effective for this operation.

11.2.7 Carefully remove the top of the filter holder, making sure that no carbon is lost. This operation is most successfully performed by removing the clamp, tilting the top of the filter holder (the funnel portion) to one side, and lifting upward.

11.2.8 Using a squeeze bottle or micro-syringe, rapidly rinse the carbon from the inside of the filter holder onto the filter cake using small portions of wash solution. Allow the cake to dry under vacuum for no more than 10 seconds after the final rinse. Immediately turn the vacuum off.

11.2.9 Using tweezers, carefully fold the polycarbonate filter in half, then in fourths, making sure that no carbon is lost.

11.3 Column adsorption.

11.3.1 Column preparation: Prepare a sufficient number of columns for one day's operation as follows:

11.3.1.1 In a glove box or area free from halide vapors, place a plug of Cerafelt into the end of a clean glass column.

11.3.1.2 Fill the glass column with one level scoop (approximately 40 mg) of granular activated carbon that has passed the quality control tests in Section 9.

11.3.1.3 Insert a Cerafelt plug into the open end of the column to hold the carbon in place.

11.3.1.4 Store the columns in a glass jar with PTFE lined screw-cap to prevent infiltration of halide vapors from the air.

11.3.2 Column setup.

11.3.2.1 Install two columns in series in the adsorption module.

11.3.2.2 If the sample is known or expected to contain particulates that could prevent free flow of sample through the micro-columns, a Cerafelt plug is placed in the tubing ahead of the columns. If a measurement of the OX content of the particulates is desired, the Cerafelt plug can be washed with nitrate solution, placed in a combustion boat, and processed as a separate sample.

11.3.3 Adjusting sample flow rate: Because the flow rate used to load the sample onto the columns can affect the ability of the GAC to adsorb organic halides, the flow rate of the method blank is measured, and the gas pressure used to process samples is adjusted accordingly. The flow rate of the blank, which is composed of acidified reagent water and contains no particulate matter, should be greater than the flow rate of any sample containing even small amounts of particulate matter.

11.3.3.1 Fill the sample reservoir with the volume of reagent water chosen for the analysis (Section 9.4.1.2) that has been preserved and acidified as described in Section 8. Cap the reservoir.

11.3.3.2 Adjust the gas pressure per the manufacturer's instructions. Record the time required for the entire volume of reagent water to pass through both columns. The flow rate must not exceed 3 mL/min over the duration of the time required to adsorb the volume. If this flow rate is exceeded, adjust gas pressure, prepare another blank, and repeat the adsorption.

11.3.3.3 Once the flow rate for the blank has been established, the same adsorption conditions must be applied to all subsequent samples during that eight-hour shift, or until another method blank is processed, whichever comes first. To aid in overcoming breakthrough problems, a lower gas pressure (and, therefore, flow rate) may be used for processing of samples, if desired. If the sample adsorption unit is disassembled or cleaned, the flow rate must be checked before processing additional samples.

11.3.3.4 Elute the pair of columns with 2 mL of nitrate wash solution. The flow rate of nitrate wash solution must not exceed 3 mL/min.

11.3.3.5 Separate the columns and mark for subsequent analysis.

11.3.4 The adsorption of sample volumes is performed in a similar fashion. Fill the sample reservoir with the sample volume chosen for the analysis (Section 11.1), that has been preserved as described in Section 8. All analyses must be performed with this volume (sample volume plus reagent water, as needed) in order to maintain a flow rate no greater than that determined for the blank (see Section 11.3.3).

11.3.4.1 Use the same gas pressure for sample adsorption as is used for the blank.

11.3.4.2 Elute the columns with 2 mL of the nitrate wash solution.

11.3.4.3 Separate the columns and mark for subsequent analysis.

11.3.5 If it is desirable to make measurements at levels lower than can be achieved with the sample volume chosen, or if the instrument response of an undiluted sample is less than three times the instrument response of the blank (Section 12.6.3), a larger sample volume must be used.

11.4 Combustion and titration.

11.4.1 Polycarbonate filter and GAC from batch adsorption.

11.4.1.1 Place the folded polycarbonate filter containing the GAC in a quartz combustion boat, close the airlock, and proceed with the automated sequence.

11.4.1.2 Record the signal from the micro-coulometer for a minimum integration time of 10 minutes and determine the concentration of Cl^- from calibration data, per Section 12.

11.4.2 Columns from column adsorption.

11.4.2.1 Using the push rod, push the carbon and the Cerafelt plug(s) from the first column into a combustion boat. Proceed with the automated sequence.

11.4.2.2 Record the signal from the micro-coulometer for a minimum integration time of 10 minutes and determine the concentration of Cl^- for the first column from calibration data, per Section 12.

11.4.2.3 Repeat the automated sequence with the second column.

11.4.2.4 Determine the extent of breakthrough of organic halides from the first column to the second column, as described in Section 12.

11.4.3 The two columns that are used for the method blank must be combusted separately, as is done for samples. 11.5 Duplicate sample analysis: All samples to be reported for regulatory compliance purposes must be analyzed in duplicate. This requirement applies to both the batch and column adsorption procedures. In addition, if it is necessary to dilute the sample for the purposes of reducing breakthrough or maintaining the concentration within the calibration range, a more or less dilute sample must be analyzed. The adsorption volumes used for analysis of undiluted samples, diluted samples, and all replicates must be the same as the volume used for QC tests and calibration (Sections 9 and 10).

11.5.1 Using results from analysis of one sample volume (Section 11.4) and the procedure in Section 11.1.2, determine if the dilution used was within the calibration range of the instrument and/or if breakthrough exceeded the specification in Section 12.3.1. If the breakthrough criterion was exceeded or the sample was not within the calibration range, adjust the dilution volume as needed. If the breakthrough criterion was not exceeded and the sample dilution was within the calibration range, a second volume at the same dilution level may be used.

11.5.2 Adsorb the sample using the same technique (batch or column) used for the first sample volume. Combust the GAC from the second volume as described in Section 11.4, and calculate the results as described in Section 12. Compare the results of the two analyses as described in Section 12.4.

11.5.3 Duplicate analyses are not required for method blanks, as different dilution levels are not possible.

11.5.4 Duplicate analyses of the PAR standard used for calibration verification (Section 9.10) are not required.

12.0 Data Analysis and Calculations

12.1 Batch Adsorption Method: Calculate the blank-subtracted concentration of adsorbable organic halide detected in each sample (in micrograms of chloride per liter) using the following equation:

$$AOX(\mu g/L) = \frac{(C \quad B)}{V}$$

Where:

C=µg Cl^- from micro-coulometer for the sample

B=µg Cl^- from micro-coulometer for the reagent water blank (Section 9.4.1)

V = volume of sample in liters

This calculation is performed for each of the two dilution levels analyzed for each sample.

12.2 Column Adsorption Method: Calculate the blank-subtracted concentration of adsorbable organic halide detected in each sample (in micrograms of chloride per liter) using the following equation:

$$AOX(\mu g/L) = \frac{\left[(C_1 + C_2) \quad (B_1 + B_2)\right]}{V}$$

Where:

C_1=µg Cl^- from micro-coulometer for first column from the sample

C_2=µg Cl^- from micro-coulometer for second column from the sample

B_1=µg from micro-coulometer for first column from the reagent water blank (Section 9.4.1)

B_2=µg Cl^- from micro-coulometer for second column from the reagent water blank (Section 9.4.1)

V=volume of sample in liters

12.3 Percent breakthrough: For each sample analyzed by the column method, calculate the percent breakthrough of halide from the first column to the second column, using the following equation:

$$\%\,Breakthrough = \frac{(C_2 \quad B_2)(100)}{\left[(C_1 \quad B_1) + (C_2 \quad B_2)\right]}$$

12.3.1 For samples to be reported for regulatory compliance purposes, the percent breakthrough must be less than or equal to 25% for both of the two analyses performed on each sample (see Section 11.5).

12.3.2 If the breakthrough exceeds 25%, dilute the affected sample further, maintaining the amount of halide at least three times higher than the level of blank, and reanalyze the sample. Ensure that the sample is also analyzed at a second level of dilution that is at least a factor of 2 different (and still higher than three times the blank).

12.4 Relative percent difference (RPD): Calculate the relative percent difference between the results of the two analyses of each sample, using the following equation:

$$RPD = \frac{200\left|(AOX_1 \quad AOX_2)\right|}{\left[(AOX_1 + AOX_2)\right]}$$

12.5 High concentrations of AOX: If the amount of halide from either analysis exceeds the calibration range, dilute the sample and reanalyze, maintaining at least a factor of 2 difference in the dilution levels of the two portions of the sample used.

12.6 Low concentrations of AOX: The blank-subtracted final result from the batch procedure or the sum of the blank-subtracted results from the two carbon columns should be significantly above the level of the blank.

12.6.1 If the instrument response for a sample exceeds the instrument response for the blank by a factor of at least 3, the result is acceptable.

12.6.2 If the instrument response for a sample is less than three times the instrument response for the blank, and the sample has been diluted, analyze a less dilute aliquot of sample.

12.6.3 If the instrument response of an undiluted sample containing AOX above the minimum level is less than three times the instrument response for the blank, the result is suspect and may not be used for regulatory compliance purposes. In this case, find the cause of contamination, correct the problem, and reanalyze the sample under the corrected conditions.

12.7 Report results that meet all of the specifications in this method as the mean of the blank-subtracted values from Section 12.1 or 12.2 for the two analyses at different dilution levels, in µg/L of Cl^- (not as 2,4,6-trichlorophenol), to three significant figures. Report the RPD of the two analyses. For samples analyzed by the column procedure, also report the percent breakthrough.

13.0 Method Performance

The specifications contained in this method are based on data from a single laboratory and from a large-scale study of the pulp and paper industry.

14.0 Pollution Prevention

14.1 The solvents used in this method pose little threat to the environment when recycled and managed properly.

14.2 Standards should be prepared in volumes consistent with laboratory use to minimize the volume of expired standards to be disposed.

15.0 Waste Management

15.1 It is the laboratory's responsibility to comply with all federal, state, and local regulations governing waste management, particularly the hazardous waste identification rules and land disposal restrictions, and to protect the air, water, and land by minimizing and controlling all releases from fume hoods and bench operations. Compliance with all sewage discharge permits and regulations is also required.

15.2 Samples preserved with HCl or H_2SO_4 to pH <2 are hazardous and must be neutralized before being disposed, or must be handled as hazardous waste. Acetic acid and silver acetate solutions resulting from cell flushing must be disposed of in accordance with all applicable federal, state, and local regulations.

15.3 For further information on waste management, consult "The Waste Management Manual for Laboratory Personnel," and "Less is Better: Laboratory Chemical Management for Waste Reduction," both available from the American Chemical Society's Department of Government Relations and Science Policy, 1155 16th Street N.W., Washington, D.C. 20036.

16.0 References

16.1 "Total Organic Halide, Methods 450.1—Interim," Prepared by Stephen Billets and James J. Lichtenberg, USEPA, Office of Research and Development, Physical and Chemical Methods Branch, EMSL-Cincinnati, Cincinnati, OH 45268, EPA 600/4–81–056 (1981).

16.2 Method 9020, USEPA Office of Solid Waste, "Test Methods for Evaluating Solid Waste, SW–846," Third Edition, 1987.

16.3 "Determination of Adsorbable Organic Halogens (AOX)," "German Standard Methods for the Analysis of Water, Waste Water and Sludge—General Parameters of Effects and Substances," Deutsche Industrie Norm (DIN) Method 38 409, Part 14, DIN German Standards Institute, Beuth Verlag, Berlin, Germany (1987).

16.4 "Water Quality: Determination of Adsorbable Organic Halogens (AOX)," International Organization for Standard/Draft International Standardization (ISO/DIS) Method 9562 (1988).

16.5 "Organically Bound Chlorine by the AOX Method," SCAN–W 9:89, Secretariat, Scandinavian Pulp, Paper and Board Testing Committee, Box 5604, S–11486, Stockholm, Sweden (1989).

16.6 Method 5320, "Dissolved Organic Halogen," from "Standard Methods for the Examination of Water and Wastewater," 5320, American Public Health Association, 1015 15th St. NW, Washington, DC 20005 (1989).

16.7 "Canadian Standard Method for the Determination of Adsorbable Organic Halides (AOX) in Waters and Wastewaters," Environment Canada and The Canadian Pulp and Paper Association (1990).

16.8 40 CFR Part 136, Appendix B.

16.9 "Working with Carcinogens," DHEW, PHS, CDC, NIOSH, Publication 77–206, (Aug 1977).

16.10 "OSHA Safety and Health Standards, General Industry" OSHA 2206, 29 CFR 1910 (Jan 1976).

16.11 "Safety in Academic Chemistry Laboratories," ACS Committee on Chemical Safety (1979).

16.12 "Methods 330.4 and 330.5 for Total Residual Chlorine," USEPA, EMSL-Cincinnati, Cincinnati, OH 45268, EPA–4–79–020 (March 1979).

16.13 "Validation of Method 1650: Determination of Organic Halide," Analytical Technologies Inc., ERCE Contract 87–3410, November 15, 1990. Available from the EPA Sample Control Center, DynCorp, 300 N. Lee St., Alexandria, VA 22314 (703–519–1140).

17.0 Figures

BILLING CODE 6560–50–P

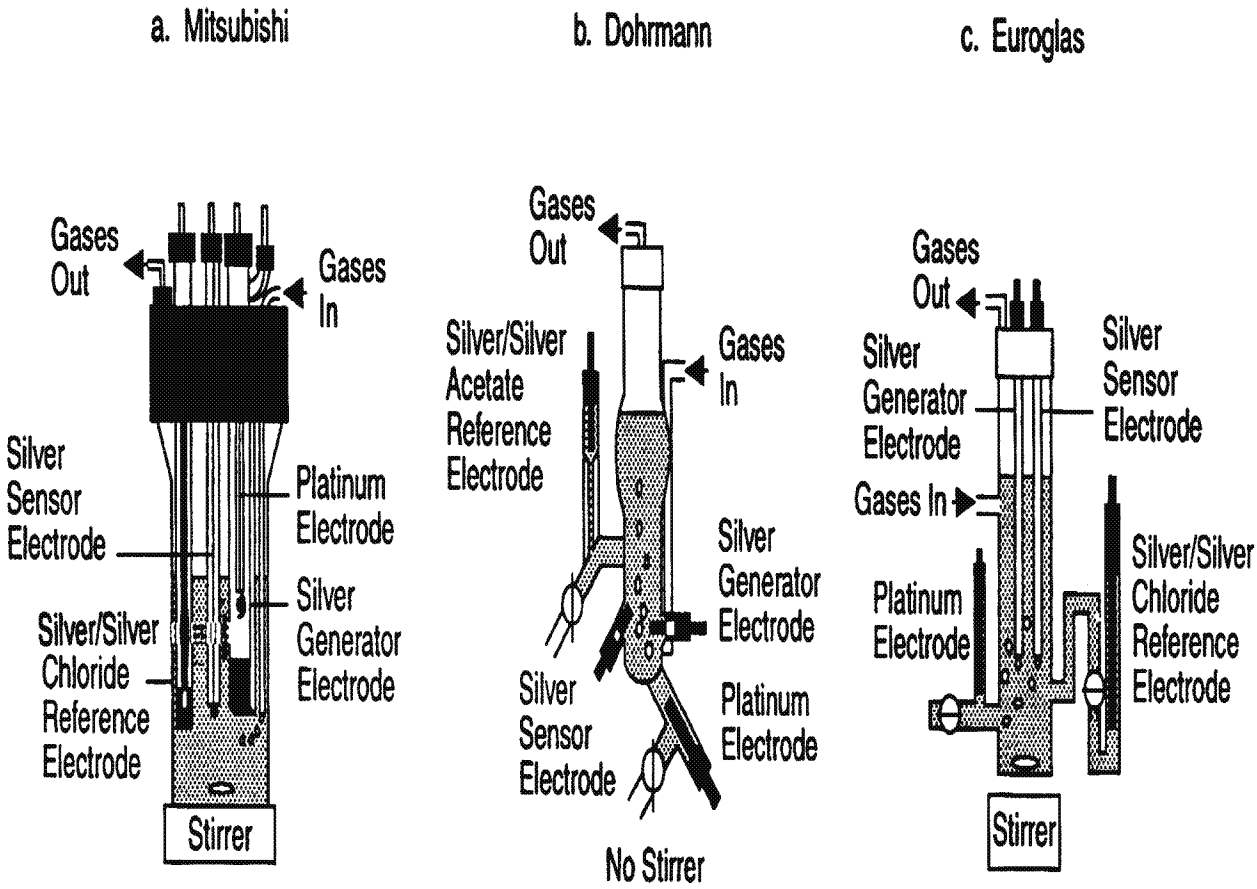

Figure 1. Microcoulometric Titration Cells (from Reference 7)

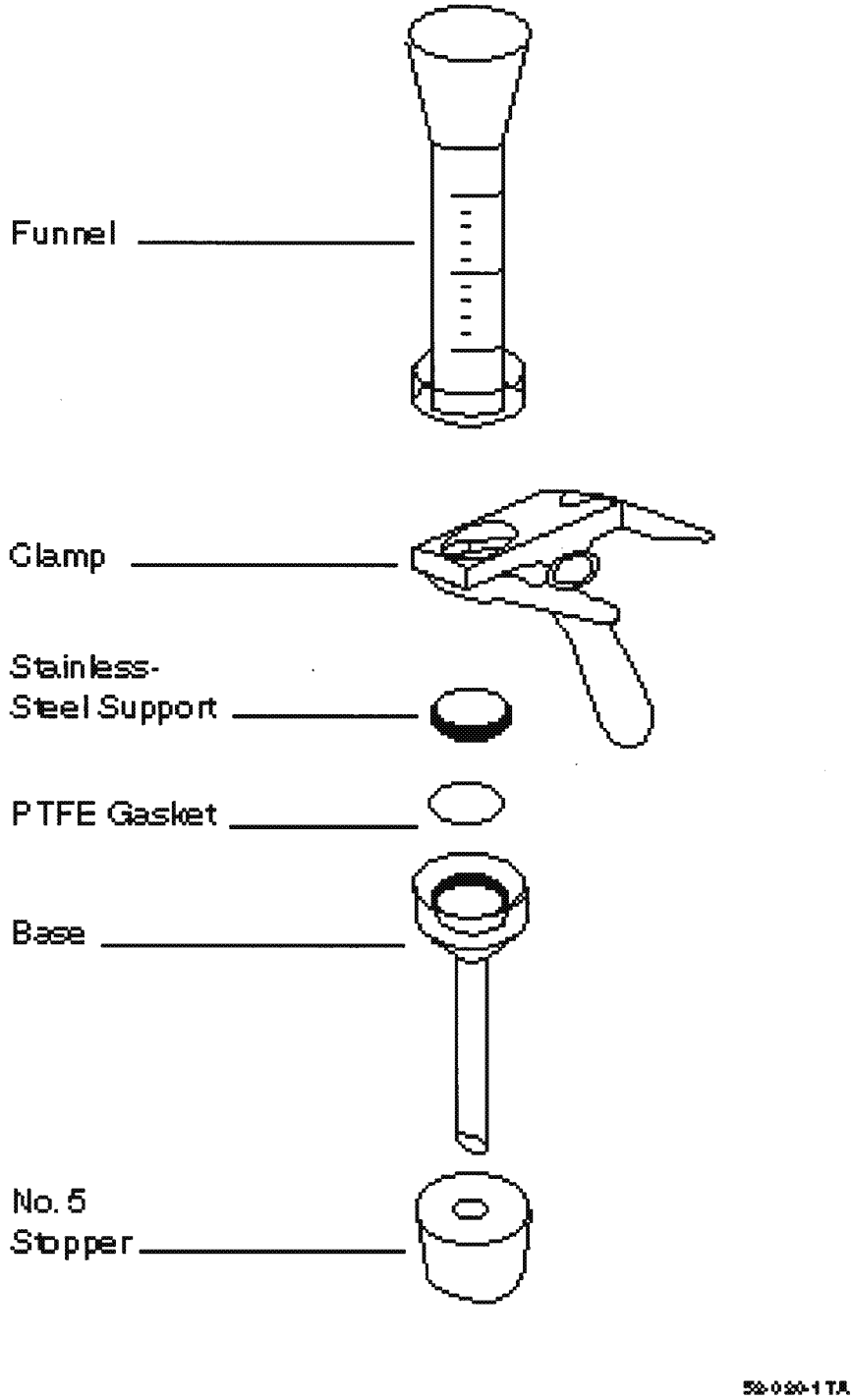

Figure 2. Filter Apparatus

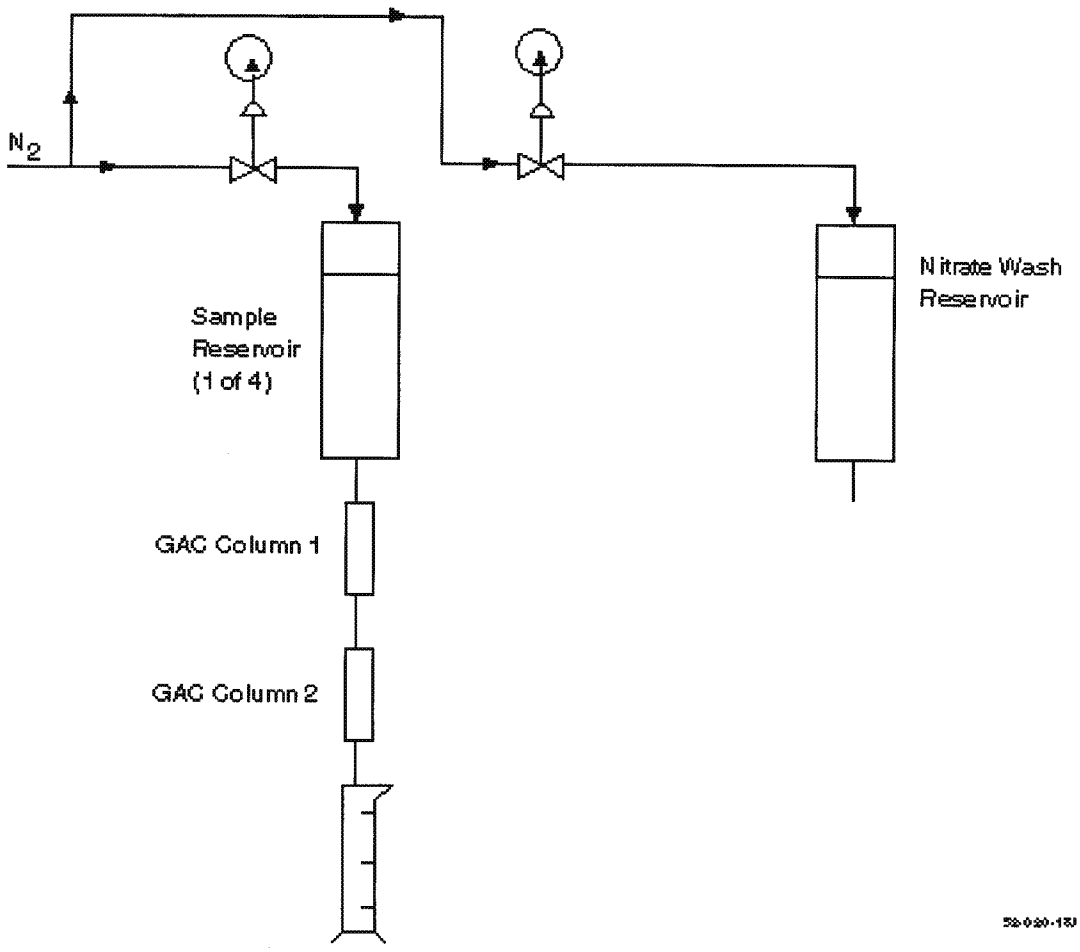

Figure3. Schematic of the Column Adsorption System

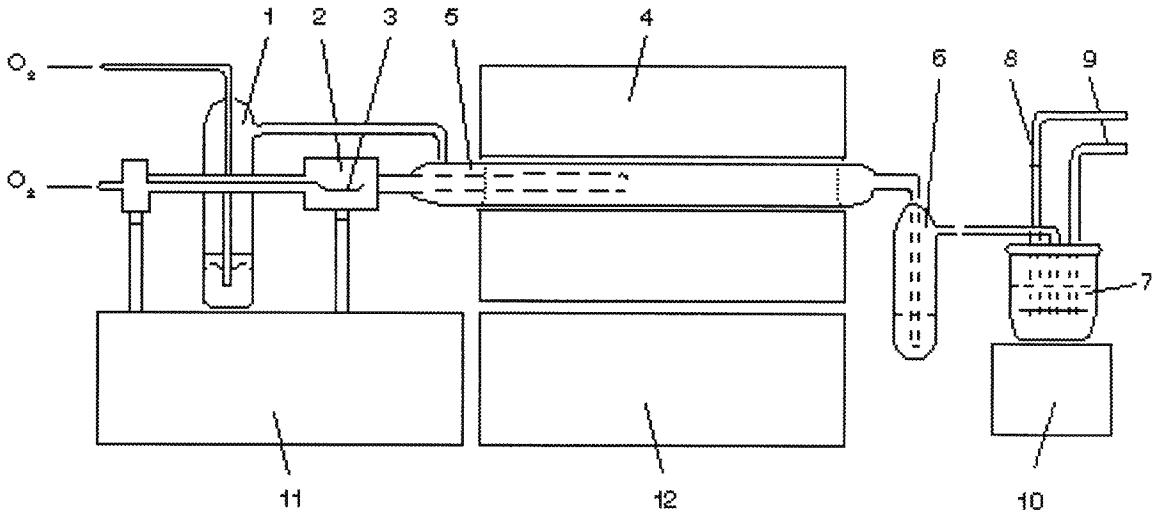

1. Stripping Device
2. Sample inlet for AOX
3. AOX Sample
4. Furnace
5. Combustion Tube
6. Absorber filled with H_2SO_4
7. Titration cell
8. Working electrodes
9. Measuring electrodes
10. Stirrer
11. Titration micro-processor
12. Gas flow and temperature control device

Figure 4. Schematic of an AOX Apparatus

BILLING CODE 6560–50–C

18.0 Glossary of Definitions and Purposes

These definitions and purposes are specific to this method but have been conformed to common usage as much as possible.

18.1 Units of weight and measure and their abbreviations.

18.1.1 Symbols.

°C degrees Celsius
µg microgram
µL microliter
< less than
> greater than
% percent

18.1.2 Alphabetical characters.

cm centimeter
g gram
h hour
ID inside diameter
in inch
L liter
m meter
mg milligram
min minute
mL milliliter
mm millimeter
N normal; gram molecular weight of solute divided by hydrogen equivalent of solute, per liter of solution
OD outside diameter
ppb part-per-billion
ppm part-per-million
ppt part-per-trillion
psig pounds-per-square inch gauge
v/v volume per unit volume
w/v weight per unit volume

18.2 Definitions and acronyms (in alphabetical order).

Analyte: AOX tested for by this method.

Calibration standard (CAL): A solution prepared from a secondary standard and/or stock solution which is used to calibrate the response of the instrument with respect to analyte concentration.

Calibration verification standard (VER): The mid-point calibration standard (CS3) that is used to verify calibration.

Field blank: An aliquot of reagent water or other reference matrix that is placed in a sample container in the laboratory or the field, and treated as a sample in all respects, including exposure to sampling site conditions, storage, preservation, and all analytical procedures. The purpose of the field blank is to determine if the field or sample transporting procedures and environments have contaminated the sample.

IPR: Initial precision and recovery; four aliquots of the diluted PAR standard analyzed to establish the ability to generate acceptable precision and accuracy. An IPR is performed prior to the first time this method is used and any time the method or instrumentation is modified.

Laboratory blank: See Method blank.

Laboratory control sample (LCS): See Ongoing precision and recovery sample (OPR).

Laboratory reagent blank: See Method blank.

May: This action, activity, or procedural step is neither required nor prohibited.

May not: This action, activity, or procedural step is prohibited.

Method blank: An aliquot of reagent water that is treated exactly as a sample including exposure to all glassware, equipment, solvents, reagents, internal standards, and surrogates that are used with samples. The method blank is used to determine if analytes or interferences are present in the laboratory environment, the reagents, or the apparatus.

Minimum level (ML): The level at which the entire analytical system must give a recognizable signal and acceptable calibration point for the analyte. It is equivalent to the concentration of the lowest calibration standard, assuming that all method-specified sample weights, volumes, and cleanup procedures have been employed.

Must: This action, activity, or procedural step is required.

OPR: Ongoing precision and recovery standard; a laboratory blank spiked with a known quantity of analyte. The OPR is analyzed exactly like a sample. Its purpose is to assure that the results produced by the laboratory remain within the limits specified in this method for precision and recovery.

PAR: Precision and recovery standard; secondary standard that is diluted and spiked to form the IPR and OPR.

Preparation blank: See Method blank.

Primary dilution standard: A solution containing the specified analytes that is purchased or prepared from stock solutions and diluted as needed to prepare calibration solutions and other solutions.

Quality control check sample (QCS): A sample containing all or a subset of the analytes at known concentrations. The QCS is obtained from a source external to the laboratory or is prepared from a source of standards different from the source of calibration standards. It is used to check laboratory performance with test materials prepared external to the normal preparation process.

Reagent water: Water demonstrated to be free from the analyte of interest and potentially interfering substances at the method detection limit for the analyte.

Relative standard deviation (RSD): The standard deviation multiplied by 100, divided by the mean.

RSD: See Relative standard deviation.

Should: This action, activity, or procedural step is suggested but not required.

Stock solution: A solution containing an analyte that is prepared using a reference material traceable to EPA, the National Institute of Science and Technology (NIST), or a source that will attest to the purity and authenticity of the reference material.

VER: See Calibration verification standard.

Method 1653—Chlorinated Phenolics in Wastewater by In Situ Acetylation and GCMS

1.0 Scope and Application

1.1 This method is for determination of chlorinated phenolics (chlorinated phenols, guaiacols, catechols, vanillins, syringaldehydes) and other compounds associated with the Clean Water Act; the Resource Conservation and Recovery Act; and the Comprehensive Environmental Response, Compensation, and Liability Act; and that are amenable to in situ acetylation, extraction, and analysis by capillary column gas chromatography/mass spectrometry (GCMS). This method is based on existing methods for determination of chlorophenolics in pulp and paper industry wastewaters (References 1 and 2).

1.2 The chemical compounds listed in Table 1 may be determined in waters and, specifically, in in-process streams and wastewaters associated with the pulp and paper industry. The method is designed to meet the survey and monitoring requirements of the Environmental Protection Agency (EPA).

1.3 The detection limit of this method is usually dependent on the level of interferences rather than instrumental limitations. The method detection limits (MDLs) in Table 2 typify the minimum quantity that can be detected with no interferences present.

1.4 The GCMS portions of this method are for use only by persons experienced with GCMS or under the close supervision of such qualified persons. Laboratories unfamiliar with analyses of environmental samples by GCMS should run the performance tests in Reference 3 before beginning.

1.5 Any modification of the method beyond those expressly permitted is subject to the application and approval of alternative test procedures under 40 CFR Parts 136.4 and 136.5.

2.0 Summary of Method

2.1 A 1000-mL aliquot of water is spiked with stable isotopically labeled analogs of the compounds of interest and an internal standard. The solution is adjusted to neutral pH, potassium carbonate buffer is added, and the pH is raised to 9–11.5. The chlorophenolics are converted in situ to acetates by the addition of acetic anhydride. After acetylation, the solution is extracted with hexane. The hexane is concentrated to a final volume of 0.5 mL, an instrument internal standard is added, and an aliquot of the concentrated extract is injected into the gas chromatograph (GC). The compounds are separated by GC and detected by a mass spectrometer (MS). The labeled compounds and internal standard serve to correct the variability of the analytical technique.

2.2 Identification of a pollutant (qualitative analysis) is performed by comparing the relative retention time and mass spectrum to that of an authentic standard. A compound is identified when its relative retention time and mass spectrum agree.

2.3 Quantitative analysis is performed in one of two ways by GCMS using extracted ion-current profile (EICP) areas: (1) For those compounds listed in Table 1 for which standards and labeled analogs are available, the GCMS system is calibrated and the compound concentration is determined using an isotope dilution technique; (2) for those compounds listed in Table 1 for which authentic standards but no labeled compounds are available, the GCMS system is calibrated and the compound concentration is determined using an internal standard technique.

2.4 Quality is assured through reproducible calibration and testing of the extraction and GCMS systems.

3.0 Definitions

3.1 Chlorinated phenolics are the chlorinated phenols, guaiacols, catechols, vanillins, syringaldehydes and other compounds amenable to in situ acetylation, extraction, and determination by GCMS using this method.

3.2 Definitions for other terms used in this method are given in the glossary at the end of the method (Section 20.0).

4.0 Interferences

4.1 Solvents, reagents, glassware, and other sample processing hardware may yield artifacts and/or elevated baselines, causing misinterpretation of chromatograms and spectra. All materials used in the analysis shall be demonstrated to be free from interferences under the conditions of analysis by running method blanks initially and with each sample batch (samples started through the extraction process on a given eight-hour shift, to a maximum of 20). Specific selection of reagents and purification of solvents by distillation in all-glass systems may be required. Glassware and, where possible, reagents are cleaned by using solvent rinse and baking at 450 °C for a minimum of one hour.

4.2 Interferences co-extracted from samples will vary considerably from source to source, depending on the diversity of the site being sampled. Industry experience suggests that high levels of non-chlorinated phenols may cause poor recovery of the compounds of interest, particularly in samples collected in the vicinity of a source of creosote, such as a wood-preserving plant (Reference 1).

4.3 The internal standard, 3,4,5-trichlorophenol, has been reported to be an anaerobic degradation product of 2,3,4,5-tetrachlorophenol and/or pentachlorophenol (Reference 1). When an interference with this or another compound occurs, labeled pentachlorophenol or another labeled compound may be used as an alternative internal standard; otherwise, the internal standards and reference compounds must be used as specified in this method.

4.4 Blank contamination by pentachlorophenol has been reported (Reference 1) to be traceable to potassium carbonate; it has also been reported that this contamination may be removed by baking overnight at 400 to 500 °C.

4.5 Catechols are susceptible to degradation by active sites on injection port liners and columns, and are subject to oxidation to the corresponding chloro-o-benzoquinones (Reference 2). A small amount of ascorbic acid may be added to samples to prevent auto-oxidation (Reference 2; also see Section 11.1.6). For pulp and paper industry samples, ascorbic acid may be added to treated effluent samples only.

5.0 Safety

5.1 The toxicity or carcinogenicity of each compound or reagent used in this method has not been precisely determined; however, each chemical compound should be treated as a potential health hazard. Exposure to these compounds should be reduced to the lowest possible level. The laboratory is responsible for maintaining a current awareness file of OSHA regulations regarding the safe handling of the chemicals specified in this method. A reference file of materials safety data sheets (MSDSs) should be made available to all personnel involved in these analyses. Additional information on laboratory safety can be found in References 4 through 6.

5.2 Samples may contain high concentrations of toxic compounds, and should be handled with gloves and a hood opened to prevent exposure.

6.0 Equipment and Supplies

Note: Brand names, suppliers, and part numbers are for illustrative purposes only. No endorsement is implied. Equivalent performance may be achieved using apparatus and materials other than those specified here, but demonstration of equivalent performance that meets the requirements of this method is the responsibility of the laboratory.

6.1 Sampling equipment for discrete or composite sampling.

6.1.1 Sample bottles and caps.

6.1.1.1 Sample bottle: Amber glass, 1000-mL minimum, with screw-cap. If amber bottles are not available, samples shall be protected from light.

6.1.1.2 Bottle caps: Threaded to fit sample bottles. Caps shall be lined with PTFE.

6.1.1.3 Cleaning bottles: Detergent water wash, cap with aluminum foil, and bake at 450°C for a minimum of one hour before use.

6.1.1.4 Cleaning liners: Detergent water wash, reagent water (Section 7.4) and solvent rinse, and bake at approximately 200°C for a minimum of 1 hour prior to use.

6.1.1.5 Bottles and liners must be lot-certified to be free of chlorophenolics by running blanks according to this method. If blanks from bottles and/or liners without cleaning or with fewer cleaning steps show no detectable chlorophenolics, the bottle and liner cleaning steps that do not eliminate chlorophenolics may be omitted.

6.1.2 Compositing equipment: Automatic or manual compositing system incorporating glass containers cleaned per bottle cleaning procedure above. Sample containers are kept at 0 to 4 °C during sampling. Glass or PTFE tubing only shall be used. If the sampler uses a peristaltic pump, a minimum length of compressible silicone rubber tubing may be used in the pump only. Before use, the tubing shall be thoroughly rinsed with methanol, followed by repeated rinsing with reagent water (Section 7.4) to minimize sample contamination. An integrating flow meter is used to collect proportional composite samples.

6.2 Extraction apparatus.

6.2.1 Bottle or beaker: 1500-to 2000-mL capacity.

6.2.2 Separatory funnel: 500-to 2000-mL, glass, with PTFE stopcock.

6.2.3 Magnetic stirrer: Corning Model 320, or equivalent, with stirring bar.

6.3 Polyethylene gloves: For handling samples and extraction equipment (Fisher 11–394–110–B, or equivalent).

6.4 Graduated cylinders: 1000-mL, 100-mL, and 10-mL nominal.

6.5 Centrifuge: Capable of accepting 50-mL centrifuge tubes and achieving 3000 RPM.

6.5.1 Centrifuge tubes.

6.5.1.1 35-mL nominal, with PTFE-lined screw-cap.

6.5.1.2 15-mL nominal, conical graduated, with ground-glass stopper.

6.6 Concentration apparatus.

6.6.1 Kuderna-Danish (K–D) concentrator tube: 10-mL, graduated (Kontes K–570050–1025, or equivalent) with calibration verified. Ground-glass stopper (size 19/22 joint) is used to prevent evaporation of extracts.

6.6.2 Kuderna-Danish (K–D) evaporation flask: 1000-mL (Kontes K–570001–1000, or equivalent), attached to concentrator tube with springs (Kontes K–662750–0012).

6.6.3 Snyder column: Three-ball macro (Kontes K–503000–0232, or equivalent).

6.6.4 Snyder column: Two-ball micro (Kontes K–469002–0219, or equivalent).

6.6.5 Boiling chips: Approximately 10/40 mesh, extracted with methylene chloride and baked at 450 °C for a minimum of one hour.

6.6.6 Nitrogen evaporation apparatus: Equipped with a water bath controlled at 35 to 40 °C (N-Evap, Organomation Associates, Inc., South Berlin, MA, or equivalent), installed in a fume hood. This device may be used in place of the micro-Snyder column concentrator in Section 6.6.4 above.

6.7 Water bath: Heated, with concentric ring cover, capable of temperature control (± 2 °C), installed in a fume hood.

6.8 Sample vials: Amber glass, 1- to 3-mL, with PTFE-lined screw-cap.

6.9 Balances.

6.9.1 Analytical: Capable of weighing 0.1 mg.

6.9.2 Top loading: Capable of weighing 10 mg.

6.10 pH meter.

6.11 Gas chromatograph: Shall have splitless or on-column injection port for capillary column, temperature program with 50°C hold, and shall meet all of the performance specifications in Section 9.

6.12 Gas chromatographic column: 30 m (±5 m) 0.25 mm (±0.02 mm) I.D. 0.25 micron, 5% phenyl, 94% methyl, 1% vinyl silicone bonded-phase fused-silica capillary column (J & W DB–5, or equivalent).

6.13 Mass spectrometer: 70 eV electron impact ionization, shall repetitively scan from 42 to 450 amu in 0.95 to 1.00 second, and shall produce a unit resolution (valleys between m/z 441–442 less than 10% of the height of the 441 peak), background-corrected mass spectrum from 50 ng decafluorotriphenylphosphine (DFTPP) introduced through the GC inlet. The spectrum shall meet the mass-intensity criteria in Table 3 (Reference 7). The mass spectrometer shall be interfaced to the GC such that the end of the capillary column terminates within 1 cm of the ion source, but does not intercept the electron or ion beams. All portions of the column which connect the GC to the ion source shall remain at or above the column temperature during analysis to preclude condensation of less volatile compounds.

6.14 Data system: Shall collect and record MS data, store mass-intensity data in spectral

libraries, process GCMS data, generate reports, and compute and record response factors.

6.14.1 Data acquisition: Mass spectra shall be collected continuously throughout the analysis and stored on a mass storage device.

6.14.2 Mass spectral libraries: User-created libraries containing mass spectra obtained from analysis of authentic standards shall be employed to reverse search GCMS runs for the compounds of interest (Section 10.2).

6.14.3 Data processing: The data system shall be used to search, locate, identify, and quantify the compounds of interest in each GCMS analysis. Software routines shall be employed to compute retention times, and to compute peak areas at the m/z's specified (Table 4). Displays of spectra, mass chromatograms, and library comparisons are required to verify results.

6.14.4 Response factors and multi-point calibrations: The data system shall be used to record and maintain lists of response factors (response ratios for isotope dilution) and multi-point calibration curves (Section 10). Computations of relative standard deviation (coefficient of variation) are used for testing calibration linearity. Statistics on initial (Section 9.3.2) and ongoing (Section 9.6) performance shall be computed and maintained.

7.0 Reagents and Standards

7.1 Reagents for adjusting sample pH.

7.1.1 Sodium hydroxide: Reagent grade, 6 N in reagent water.

7.1.2 Sulfuric acid: Reagent grade, 6 N in reagent water.

7.2 Reagents for sample preservation.

7.2.1 Sodium thiosulfate ($Na_2S_2O_3$) solution (1 N): Weigh 79 g $Na_2S_2O_3$ in a 1–L volumetric flask and dilute to the mark with reagent water.

7.2.2 Ascorbic acid solution: Prepare a solution of ascorbic acid in reagent water at a concentration of 0.1 g/mL. This solution must be prepared fresh on each day when derivatizations will be performed. Therefore, do not prepare more than will be used that day. (A 50-mL volume is sufficient for ten analyses).

7.3 Solvents: Hexane, acetone, and methanol. Distilled in glass (Burdick and Jackson, or equivalent).

7.4 Reagent water: Water in which the compounds of interest and interfering compounds are not detected by this method.

7.5 Reagents for derivatization.

7.5.1 Potassium carbonate (K_2CO_3).

7.5.1.1 Purification: Spread in a shallow baking dish, heat overnight at 400 to 500°C.

7.5.1.2 Solution: Dissolve 150 g purified K_2CO_3 in 250 mL reagent water.

7.5.2 Acetic anhydride: Redistilled reagent grade.

7.6 Analytical standards.

7.6.1 Derivatization: Because the chlorinated phenolics are determined as their acetate derivatives after in situ acetylation, the method requires that the calibration standards be prepared by spiking the underivatized materials into reagent water and carrying the spiked reagent water aliquot through the entire derivatization and extraction procedure that is applied to the field samples.

7.6.2 Standard solutions: Purchased as solutions or mixtures with certification to their purity, concentration, and authenticity, or prepared from materials of known purity and composition. If chemical purity of a compound is 98% or greater, the weight may be used without correction to compute the concentration of the standard. When not being used, standards are stored in the dark at −20 to −10 °C in screw-capped vials with PTFE-lined lids. A mark is placed on the vial at the level of the solution so that solvent evaporation loss can be detected. The vials are brought to room temperature prior to use.

7.6.3 If the chemical purity of any standard does not meet the 98% requirement above, the laboratory must correct all calculations, calibrations, etc., for the difference in purity.

7.7 Preparation of stock solutions: Prepare chlorovanillins and chlorosyringaldehydes in acetone, as these compounds are subject to degradation in methanol. Prepare the remaining chlorophenolics in methanol. Prepare all standards per the steps below. Observe the safety precautions in Section 5.

7.7.1 Dissolve an appropriate amount of assayed reference material in a suitable solvent. For example, weigh 50 mg (±0.1 mg) of pentachlorophenol in a 10-mL ground-glass-stoppered volumetric flask and fill to the mark with methanol. After the pentachlorophenol is completely dissolved, transfer the solution to a 15-mL vial with PTFE-lined cap.

7.7.2 Stock solutions should be checked for signs of degradation prior to the preparation of calibration or performance test standards and shall be replaced after six months, or sooner if comparison with quality control check standards indicates a change in concentration.

7.8 Labeled compound spiking solution: From stock solutions prepared as above, or from mixtures, prepare one spiking solution to contain the labeled chlorovanillin in acetone and a second spiking solution to contain the remaining chlorophenolics, including the 3,4,5-trichlorophenol sample matrix internal standard (SMIS), in methanol. The labeled compounds and SMIS are each at a concentration of 12.5 µg/mL.

7.9 Secondary standards for calibration: Using stock solutions (Section 7.7), prepare one secondary standard containing the chlorovanillins and chlorsyringaldehydes listed in Table 1 in acetone and a second secondary standard containing the remaining chlorophenolics in methanol. The monochlorinated phenol, guaiacol, and catechol are included at a concentration of 25 µg/mL; the trichlorinated catechols, tetrachlorinated guaiacol and catechol, pentachlorophenol, 5,6-dichlorovanillin, and 2,6-dichlorosyringaldehyde are included at a concentration of 100 µg/mL; and the remaining compounds are included at a concentration of 50 µg/mL, each in their respective solutions.

7.10 Instrument internal standard (IIS): Prepare a solution of 2,2 -difluorobiphenyl (DFB) at a concentration of 2.5 mg/mL in hexane.

7.11 DFTPP solution: Prepare a solution of DFTPP at 50 µg/mL in acetone.

7.12 Solutions for obtaining authentic mass spectra (Section 10.2): Prepare mixtures of compounds at concentrations which will assure authentic spectra are obtained for storage in libraries.

7.13 Preparation of calibration solutions.

7.13.1 Into five 1000-mL aliquots of reagent water, spike 50, 100, 200, 500 and 1000 µL of each of the two solutions in Section 7.9. Spike 1.00 mL of each of the two labeled compound spiking solutions (Section 7.8) into each of the five aliquots.

7.13.2 Using the procedure in Section 11, derivatize and extract each solution, and concentrate the extract to a final volume of 0.50 mL. This will produce calibration solutions of nominal 5, 10, 20, 50, and 100 µg/mL of the native chlorophenolics and a constant concentration of 25 µg/mL of each labeled compound and the SMIS (assuming 100% derivatization and recovery). As noted in Section 11.1.6, ascorbic acid is added to all samples of final effluents to stabilize chlorocatechols, but is not added to samples of pulp and paper in-process wastewaters. Therefore, it is necessary to prepare separate sets of five initial calibration standards with and without the addition of ascorbic acid. Also, in the event that the laboratory is extracting final effluent samples by both the stir-bar and separatory funnel procedures (see Section 11.3), initial calibration standards should be prepared by both methods.

7.13.3 These solutions permit the relative response (labeled to unlabeled) and the response factor to be measured as a function of concentration (Sections 10.4 and 10.5).

7.13.4 The nominal 50 µg/mL standard may also be used as a calibration verification standard (see Section 9.6).

7.14 Ongoing precision and recovery (OPR) standard: Used for determination of initial (Section 9.3.2) and ongoing (Section 9.6) precision and recovery. This solution is prepared by spiking 500 µL of each the two solutions of the secondary calibration standards (Section 7.9) and 1 mL of each of the two labeled compound spiking solutions (Section 7.8) into 1000 mL of reagent water.

7.15 Stability of solutions: All standard solutions (Sections 7.7 through 7.14) shall be analyzed within 48 hours of preparation and on a monthly basis thereafter for signs of degradation. Standards will remain acceptable if the peak area at the quantitation m/z relative to the DFB internal standard remains within ±15% of the area obtained in the initial analysis of the standard.

8.0 Sample Collection, Preservation, and Storage

8.1 Collect samples in glass containers (Section 6.1) following conventional sampling practices (Reference 9). Aqueous samples are collected in refrigerated bottles using automatic sampling equipment.

8.2 Sample preservation.

8.2.1 Residual chlorine: If the sample contains residual chlorine, the chlorine must be reduced to eliminate positive interference resulting from continued chlorination reactions. Immediately after sampling, test for residual chlorine using the following

method or an alternative EPA method (Reference 10).

8.2.1.1 Dissolve a few crystals of potassium iodide in the sample and add three to five drops of a 1% starch solution. A blue color indicates the presence of residual chlorine.

8.2.1.2 If residual chlorine is found, add 1 mL of sodium thiosulfate solution (Section 7.2.1) for each 2.5 ppm of free chlorine or until the blue color disappears.

8.2.2 Acidification: Adjust pH of all aqueous samples to <2 with sulfuric acid (Section 7.1.2). Failure to acidify samples may result in positive interferences from continued chlorination reactions.

8.2.3 Refrigeration: Maintain sample temperature at 0 to 4°C from time of collection until extraction, and maintain extracts at a temperature of 0 to 4°C from time of extraction until analysis.

8.3 Collect a minimum of 2000 mL of sample. This will provide a sufficient amount for all testing. Smaller amounts may be collected if the stream is known to contain high levels of chlorophenolics.

8.4 All samples must be acetylated and extracted within 30 days of collection, and must be analyzed within 30 days of acetylation. If labeled compound recoveries for a sample do not meet the acceptance criteria in Table 5 and the 30-day holding time is not met, a new sample must be collected.

9.0 Quality Control

9.1 Each laboratory that uses this method is required to operate a formal quality assurance program (Reference 8). The minimum requirements of this program consist of an initial demonstration of laboratory capability, analysis of samples spiked with labeled compounds to evaluate and document data quality, and analysis of standards and blanks as tests of continued performance. Laboratory performance is compared to established performance criteria to determine if the results of analyses meet the performance characteristics of the method.

9.1.1 DFTPP spectrum validity shall be checked at the beginning of each eight-hour shift during which analyses are performed. This test is described in Section 9.2.

9.1.2 The laboratory shall make an initial demonstration of the ability to generate acceptable results with this method. This ability is established as described in Section 9.3.

9.1.3 The laboratory is permitted to modify this method to improve separations or lower the costs of measurements, provided all performance specifications are met. Each time a modification is made to the method, the laboratory is required to repeat the procedures in Sections 10.3 and 9.3.2 to demonstrate method performance. If the detection limits for the analytes in this method will be affected by the modification, the laboratory should demonstrate that each MDL (40 CFR 136, Appendix B) is less than or equal to the MDL in this method or one-third the regulatory compliance level, whichever is higher.

9.1.4 The laboratory shall spike all samples with labeled compounds and the sample matrix internal standard (SMIS) to monitor method performance. This test is described in Section 9.4. When results of these spikes indicate atypical method performance for samples, the samples are diluted to bring method performance within acceptable limits (Section 13).

9.1.5 Analyses of blanks are required to demonstrate freedom from contamination. The procedures and criteria for analysis of a blank are described in Section 9.5.

9.1.6 The laboratory shall, on an ongoing basis, demonstrate through analysis of the ongoing precision and recovery standard (Section 7.14) that the analysis system is in control. These procedures are described in Section 9.6.

9.1.7 The laboratory shall maintain records to define the quality of data that is generated. Development of accuracy statements is described in Section 9.4.4 and 9.6.3.

9.2 DFTPP spectrum validity: Inject 1 µL of the DFTPP solution (Section 7.11) either separately or within a few seconds of injection of the OPR standard (Section 9.6) analyzed at the beginning of each shift. The criteria in Table 3 shall be met.

9.3 Initial demonstration of laboratory capability.

9.3.1 Method Detection Limit (MDL): To establish the ability to detect the analytes in this method, the laboratory should determine the MDL per the procedure in 40 CFR 136, Appendix B using the apparatus, reagents, and standards that will be used in the practice of this method. MDLs less than or equal to the MDLs in Table 2 should be achieved prior to the practice of this method.

9.3.2 Initial precision and recovery (IPR): To establish the ability to demonstrate control over the analysis system and to generate acceptable precision and accuracy, the laboratory shall perform the following operations:

9.3.2.1 Derivatize, extract, concentrate, and analyze four 1000-mL aliquots of the ongoing precision and recovery standard (OPR; Section 7.14), according to the procedure in Section 11. Separate sets of IPR aliquots must be prepared with the addition of ascorbic acid and without.

9.3.2.2 Using results of the four analyses, compute the average percent recovery (X) and the relative standard deviation of the recovery (s) for each compound, by isotope dilution for pollutants with a labeled analog, and by internal standard for pollutants with no labeled analog and for the labeled compounds and the SMIS.

9.3.2.3 For each compound, compare s and X with the corresponding limits for initial precision and recovery in Table 5. If s and X for all compounds meet the acceptance criteria, system performance is acceptable and analysis of blanks and samples may begin. If, however, any individual s exceeds the precision limit or any individual X falls outside the range for recovery, system performance is unacceptable for that compound. In this event, correct the problem and repeat the test (Section 9.3.2).

9.4 Labeled compound recovery: The laboratory shall spike all samples with labeled compounds and the sample matrix internal standard (SMIS) to assess method performance on the sample matrix.

9.4.1 Analyze each sample according to the method beginning in Section 11.

9.4.2 Compute the percent recovery (P) of the labeled compounds and the SMIS using the internal standard method (Section 14.3) with 2,2'-difluorobiphenyl as the reference compound.

9.4.3 Compare the labeled compound and SMIS recovery for each compound with the corresponding limits in Table 5. If the recovery of any compound falls outside its warning limit, method performance is unacceptable for that compound in that sample. Therefore, the sample is complex. The sample is diluted and reanalyzed per Section 13.

9.4.4 As part of the QA program for the laboratory, it is suggested, but not required, that method accuracy for samples be assessed and records maintained. After the analysis of five samples for which the labeled compounds pass the tests in Section 9.4.3, compute the average percent recovery (P) and the standard deviation of the percent recovery (sp) for the labeled compounds only. Express the accuracy assessment as a percent recovery interval from $P - 2sp$ to $P + 2sp$ for each matrix. For example, if $P = 90\%$ and $sp = 10\%$, the accuracy interval is expressed as 70 to 110%. Update the accuracy assessment for each compound on a regular basis (e.g., after each 20 to 30 new accuracy measurements).

9.5 Blanks: Reagent water blanks are analyzed to demonstrate freedom from contamination.

9.5.1 Extract and concentrate a 1000-mL reagent water blank with each sample batch (samples started through the extraction process on the same eight-hour shift, to a maximum of 20 samples). Blanks associated with samples to which ascorbic acid is added must be prepared with ascorbic acid, and blanks associated with samples to which ascorbic acid is not added must be prepared without ascorbic acid. Analyze the blank immediately after analysis of the OPR (Section 7.14) to demonstrate freedom from contamination.

9.5.2 If any of the compounds of interest (Table 1) or any potentially interfering compound is found in an aqueous blank at greater than 5 µg/L (assuming a response factor of one relative to the sample matrix internal standard for compounds not listed in Table 1), analysis of samples is halted until the source of contamination is eliminated and a blank shows no evidence of contamination at this level.

9.6 Calibration verification and ongoing precision and recovery: At the beginning of each eight-hour shift during which analyses are performed, analytical system performance is verified for all compounds. Analysis of DFTPP (Section 9.2) and the nominal 50 µg/mL OPR (Section 11.1.5) is used to verify all performance criteria. Adjustment and/or recalibration, per Section 10, shall be performed until all performance criteria are met. Only after all performance criteria are met may samples and blanks be analyzed.

9.6.1 Analyze the extract of the OPR (Section 11.1.5) at the beginning of each eight-hour shift and prior to analysis of

samples from the same batch. Alternatively, a separate calibration verification may be performed using an aliquot of the midpoint calibration standard from Section 7.13 (with a nominal concentration of 50∝g/mL). This alternative may be used to check instrument performance on failure of an OPR, or when samples extracted with an OPR aliquot are not analyzed within the same eight-hour analysis shift.

9.6.1.1 Retention times: The absolute retention time of 2,2 -difluorobiphenyl shall be within the range of 765 to 885 seconds, and the relative retention times of all pollutants and labeled compounds shall fall within the limits given in Table 2.

9.6.1.2 GC resolution: The valley height between 4,6-dichloroguaiacol and 3,4-dichloroguaiacol at m/z 192 shall not exceed 10% of the height of the taller of the two peaks.

9.6.1.3 Multiple peaks: Each compound injected shall give a single, distinct GC peak.

9.6.2 Compute the percent recovery of each pollutant (Table 1) by isotope dilution (Section 10.4) for those compounds that have labeled analogs. Compute the percent recovery of each pollutant that has no labeled analog by the internal standard method (Section 10.5), using the 3,4,5-trichlorophenol (SMIS) as the internal standard. Compute the percent recovery of the labeled compounds and the SMIS by the internal standard method, using the 2,2 -difluorobiphenyl as the internal standard.

9.6.2.1 For each compound, compare the recovery with the limits for ongoing precision and recovery in Table 5. If all compounds meet the acceptance criteria, system performance is acceptable and analysis of blanks and samples may proceed. If, however, any individual recovery falls outside of the range given, system performance is unacceptable for that compound. In this event, there may be a problem with the GCMS or with the derivatization/extraction/concentration systems.

9.6.2.2 GCMS system: To determine if the failure of the OPR test (Section 9.6.2.1) is due to instrument drift, analyze the current calibration verification extract (Section 7.13.4), calculate the percent recoveries of all compounds, and compare with the OPR recovery limits in Table 5. If all compounds meet these criteria, GCMS performance/stability is verified, and the failure of the OPR analysis is attributed to problems in the derivatization/extraction/concentration of the OPR. In this case, analysis of the sample extracts may proceed. However, failure of any of the recovery criteria in the analysis of a sample extract requires rederivatization of that sample (Sections 13.3.1 and 13.3.2). If, however, the performance/stability of the GCMS is not verified by analysis of the calibration verification extract, the GCMS requires recalibration and all extracts associated with the failed OPR must be reanalyzed.

9.6.3 Add results that pass the specifications in Section 9.6.2.1 to initial and previous ongoing data for each compound. Update QC charts to form a graphic representation of continued laboratory performance. Develop a statement of laboratory accuracy for each pollutant and labeled compound in each matrix type (reagent water, C-stage filtrate, E-stage filtrate, final effluent, etc.) by calculating the average percent recovery (R) and the standard deviation of percent recovery (sr). Express the accuracy as a recovery interval from R − 2sr to R + 2sr. For example, if R = 95% and sr = 5%, the accuracy is 85 to 105%.

9.7 The specifications contained in this method can be met if the apparatus used is calibrated properly, then maintained in a calibrated state. The standards used for calibration (Section 10) and for initial (Section 9.3.2) and ongoing (Section 9.6) precision and recovery should be identical, so that the most precise results will be obtained. The GCMS instrument in particular will provide the most reproducible results if dedicated to the settings and conditions required for the analyses of chlorophenolics by this method.

9.8 Depending on specific program requirements, field replicates may be collected to determine the precision of the sampling technique, and spiked samples may be required to determine the accuracy of the analysis when the internal standard method is used.

10.0 Calibration and Standardization

10.1 Assemble the GCMS and establish the operating conditions in Section 12. Analyze standards per the procedure in Section 12 to demonstrate that the analytical system meets the minimum levels in Table 2, and the mass-intensity criteria in Table 3 for 50 ng DFTPP.

10.2 Mass-spectral libraries: Detection and identification of compounds of interest are dependent upon spectra stored in user-created libraries.

10.2.1 Obtain a mass spectrum of the acetyl derivative of each chlorophenolic compound (pollutant, labeled compound, and the sample matrix internal standard) by derivatizing and analyzing an authentic standard either singly or as part of a mixture in which there is no interference between closely eluting components. That only a single compound is present is determined by examination of the spectrum. Fragments not attributable to the compound under study indicate the presence of an interfering compound.

10.2.2 Adjust the analytical conditions and scan rate (for this test only) to produce an undistorted spectrum at the GC peak maximum. An undistorted spectrum will usually be obtained if five complete spectra are collected across the upper half of the GC peak. Software algorithms designed to "enhance" the spectrum may eliminate distortion, but may also eliminate authentic m/z's or introduce other distortion.

10.2.3 The authentic reference spectrum is obtained under DFTPP tuning conditions (Section 10.1 and Table 3) to normalize it to spectra from other instruments.

10.2.4 The spectrum is edited by removing all peaks in the m/z 42 to 45 range, and saving the five most intense mass spectral peaks and all other mass spectral peaks greater than 10% of the base peak (excluding the peaks in the m/z 42 to 45 range). The spectrum may be further edited to remove common interfering m/z's. The spectrum obtained is stored for reverse search and for compound confirmation. 10.3 Minimum level: Demonstrate that the chlorophenolics are detectable at the minimum level (per all criteria in Section 14). The nominal 5 ∝g/mL calibration standard (Section 7.13) can be used to demonstrate this performance.

10.4 Calibration with isotope dilution: Isotope dilution is used when (1) labeled compounds are available, (2) interferences do not preclude its use, and (3) the quantitation m/z (Table 4) extracted ion-current profile (EICP) area for the compound is in the calibration range. Alternative labeled compounds and quantitation m/z's may be used based on availability. If any of the above conditions preclude isotope dilution, the internal standard calibration method (Section 10.5) is used.

10.4.1 A calibration curve encompassing the concentration range is prepared for each compound to be determined. The relative response (pollutant to labeled) vs. concentration in standard solutions is plotted or computed using a linear regression. The example in Figure 1 shows a calibration curve for phenol using phenol-d5 as the isotopic diluent. Also shown are the ±10% error limits (dotted lines). Relative response (RR) is determined according to the procedures described below. A minimum of five data points are employed for calibration.

10.4.2 The relative response of a pollutant to its labeled analog is determined from isotope ratio values computed from acquired data. Three isotope ratios are used in this process:

R_x = the isotope ratio measured for the pure pollutant.

R_y = the isotope ratio measured for the labeled compound.

R_m = the isotope ratio of an analytical mixture of pollutant and labeled compounds.

The m/z's are selected such that $R_x > R_y$. If R_m is not between $2R_y$ and $0.5R_x$, the method does not apply and the sample is analyzed by the internal standard method.

10.4.3 Capillary columns sometimes separate the pollutant-labeled pair when deuterium labeled compounds are used, with the labeled compound eluted first (Figure 2). For this case,

$$R_x = \frac{\text{area } m_1/z}{1}, \text{ at the retention time of the pollutant } (RT_2).$$

$$R_y = \frac{1}{\text{area } m_2/z}, \text{ at the retention time of the labeled compound } (RT_1).$$

$$R_m = \frac{\text{area at } m_1/z\ (\text{at } RT_2)}{\text{area at } m_2/z\ (\text{at } RT_1)}, \text{ as measured in the mixture of the pollutant and labeled compounds (Figure 2), and } RR = R_m.$$

10.4.4 When the pollutant-labeled pair is not separated (as occurs with carbon-13-labeled compounds), or when another labeled compound with interfering spectral masses overlaps the pollutant (a case which can occur with isomeric compounds), it is necessary to determine the contributions of the pollutant and labeled compound to the respective EICP areas. If the peaks are separated well enough to permit the data system or operator to remove the contributions of the compounds to each other, the equations in Section 10.4.3 apply. This usually occurs when the height of the valley between the two GC peaks at the same m/z is less than 70 to 90% of the height of the shorter of the two peaks. If significant GC and spectral overlap occur, RR is computed using the following equation:

$$RR = \frac{(R_y \quad R_m)(R_x + 1)}{(R_m \quad R_x)(R_y + 1)}$$

Where:

R_x is measured as shown in figure 3A,
R_y is measured as shown in figure 3B,
R_m is measured as shown in figure 3C.

For example, R_x = 46100/4780 = 9.644; R_y = 2650/43600 = 0.0608; R_m = 49200/48300 = 1.1019; thus, RR = 1.114. 10.4.5 To calibrate the analytical system by isotope dilution, analyze a 1-∝L aliquot of each of the calibration standards (Section 7.13) using the procedure in Section 12. Compute the RR at each concentration.

10.4.6 Linearity: If the ratio of relative response to concentration for any compound is constant (less than 20% coefficient of variation) over the five-point calibration range, an averaged relative response/concentration ratio may be used for that compound; otherwise, the complete calibration curve for that compound shall be used over the five-point calibration range.

10.5 Calibration by internal standard: The method contains two types of internal standards, the sample matrix internal standard (SMIS) and the instrument internal standard (IIS), and they are used for different quantitative purposes. The 3,4,5-trichlorophenol sample matrix internal standard (SMIS) is used for measurement of all pollutants with no labeled analog and when the criteria for isotope dilution (Section 10.4) cannot be met. The 2,2-difluorobiphenyl instrument internal standard (IIS) is used for determination of the labeled compounds and the SMIS. The results are used for intralaboratory statistics (Sections 9.4.4 and 9.6.3).

10.5.1 Response factors: Calibration requires the determination of response factors (RF) for both the pollutants with no labeled analog and for the labeled compounds and the SMIS. The response factor is defined by the following equation:

$$RF = \frac{(A_s \quad C_{is})}{(A_{is} \quad C_s)}$$

Where:

A_s=the area of the characteristic mass for the compound in the daily standard.
A_{is}=the area of the characteristic mass for the internal standard.
C_{is}=the concentration of the internal standard (∝g/mL).
C_s=is the concentration of the compound in the calibration standard (∝g/mL).

When this equation is used to determine the response factors for pollutant compounds without labeled analogs, use the area (A_{is}) and concentration (C_{is}) of 3,4,5-trichlorophenol (SMIS) as the internal standard. When this equation is used to determine the response factors for the labeled analogs and the SMIS, use the area (A_{is}) and concentration (C_{is}) of 2,2-difluorobiphenyl as the internal standard.

10.5.2 The response factor is determined for at least five concentrations appropriate to the response of each compound (Section 7.13); nominally, 5, 10, 20, 50, and 100 ∝g/mL. The amount of SMIS added to each solution is the same (25 ∝g/mL) so that C_{is} remains constant. Likewise, the concentration of IIS is constant in each solution. The area ratio (A_s/A_{is}) is plotted versus the concentration ratio (C_s/C_{is}) for each compound in the standard to produce a calibration curve.

10.5.3 Linearity: If the response factor (RF) for any compound is constant (less than 35% coefficient of variation) over the five-point calibration range, an averaged response factor may be used for that compound; otherwise, the complete calibration curve for that compound shall be used over the five-point range.

10.6 Combined calibration: By using calibration solutions (Section 7.13) containing the pollutants, labeled compounds, and the internal standards, a single set of analyses can be used to produce calibration curves for the isotope dilution and internal standard methods. These curves are verified each shift (Section 9) by analyzing the OPR standard, or an optional calibration verification (VER) standard. Recalibration is required only if OPR criteria (Section 9.6 and Table 5) cannot be met.

11.0 Sample Derivatization, Extraction, and Concentration

The procedure described in this section uses a stir-bar in a beaker for the derivatization. The extraction procedures applied to samples depend on the type of sample being analyzed. Extraction of samples from in-process wastewaters is performed using a separatory funnel procedure. All calibrations, IPR, OPR, and blank analyses associated with in-process wastewater samples must be performed by the separatory funnel procedure.

Extraction of samples of final effluents and raw water may be performed using either the stir-bar procedure or the separatory funnel procedure. However, all calibrations, IPR, OPR, blank, and sample analyses must be performed using the same procedure. Both procedures are described below.

11.1 Preparation of all sample types for stir-bar derivatization.

11.1.1 Allow sample to warm to room temperature.

11.1.2 Immediately prior to measuring, shake sample vigorously to insure homogeneity.

11.1.3 Measure 1000 mL (±10 mL) of sample into a clean 2000-mL beaker. Label the beaker with the sample number.

11.1.4 Dilute aliquot(s).

11.1.4.1 Complex samples: For samples that are expected to be difficult to derivatize, concentrate, or are expected to overload the GC column or mass spectrometer, measure an additional 100 mL (±1 mL) into a clean 2000-mL beaker and dilute to a final volume of 1000-mL (±50 mL) with reagent water. Label with the sample number and as the dilute aliquot. However, to ensure adequate sensitivity, a 1000-mL aliquot must always be prepared and analyzed.

11.1.4.2 Pulp and paper industry samples: For in-process streams such as E-stage and C-stage filtrates and other in-process wastewaters, it may be necessary to prepare an aliquot at an additional level of dilution. In this case, dilute 10 mL (±0.1 mL) of sample to 1000-mL (±50 mL).

11.1.5 QC aliquots: For a batch of samples of the same type to be extracted at the same time (to a maximum of 20), place two 1000-mL (±10 mL) aliquots of reagent water in clean 2000-mL beakers. Label one beaker as the blank and the other as the ongoing precision and recovery (OPR) aliquot. Because final effluent samples are treated with ascorbic acid and in-process wastewater samples are not (see Section 11.1.6), prepare an OPR aliquot and a blank for the final effluent and a separate pair for the in-process samples. Treat these QC aliquots in the same fashion as the associated samples, adding

ascorbic acid to the pair associated with the final effluents, and not adding ascorbic acid to the pair associated with the in-process samples.

11.1.6 Ascorbic acid: Added to stabilize chlorocatechols. However, for pulp and paper industry in-process streams and other in-process wastewaters, the addition of ascorbic acid may convert chloro-o-quinones to catechols if these quinones are present. Separate calibration curves must be prepared with and without the addition of ascorbic acid (Section 7.13.2).

11.1.6.1 Spike 5 to 6 mL of the ascorbic acid solution (Section 7.2.2) into each final effluent sample, and the associated calibration standards, IPR and OPR aliquots, and blank.

11.1.6.2 For pulp and paper industry C-stage filtrates, E-stage filtrates, and untreated effluents, omit the ascorbic acid to prevent the conversion of chloro-o-quinones to catechols. Prepare calibration standards, IPR and OPR aliquots, and blanks associated with these samples without ascorbic acid as well.

11.1.7 Spike 1000 ∝L of the labeled compound spiking solution (Section 7.8) into the sample and QC aliquots.

11.1.8 Spike 500 ∝L of the nominal 50 ∝g/mL calibration solution (Section 7.13.4) into the OPR aliquot.

11.1.9 Adjust the pH of the sample aliquots to between 7.0 and 7.1. For calibration standards, IPR and OPR aliquots, and blanks, pH adjustment is not required.

11.1.10 Equilibrate all sample and QC solutions for approximately 15 minutes, with occasional stirring.

11.2 Derivatization: Because derivatization must proceed rapidly, particularly upon the addition of the K_2CO_3 buffer, it is necessary to work with one sample at a time until the derivatization step (Section 11.2.3) is complete.

11.2.1 Place a beaker containing a sample or QC aliquot on the magnetic stirrer in a fume hood, drop a clean stirring bar into the beaker, and increase the speed of the stirring bar until the vortex is drawn to the bottom of the beaker.

11.2.2 Measure 25 to 26 mL of K_2CO_3 buffer into a graduated cylinder or other container and 25 to 26 mL of acetic acid into another.

11.2.3 Add the K_2CO_3 buffer to the sample or QC aliquot, immediately (within one to three seconds) add the acetic anhydride, and stir for three to five minutes to complete the derivatization.

11.3 Extraction: Two procedures are described below for the extraction of derivatized samples. The choice of extraction procedure will depend on the sample type. For final effluent samples, either of two procedures may be utilized for extraction of derivatized samples. For samples of in-process wastewaters, the separatory funnel extraction procedure must be used.

Note: Whichever procedure is employed, the same extraction procedure must be used for calibration standards, IPR aliquots, OPR aliquots, blanks, and the associated field samples.

11.3.1 Stir-bar extraction of final effluents.

11.3.1.1 Add 200 mL (±20 mL) of hexane to the beaker and stir for three to five minutes, drawing the vortex to the bottom of the beaker.

11.3.1.2 Stop the stirring and drain the hexane and a portion of the water into a 500- to 1000-mL separatory funnel. Allow the layers to separate.

11.3.1.3 Drain the aqueous layer back into the beaker.

11.3.1.4 The formation of emulsions can be expected in any solvent extraction procedure. If an emulsion forms, the laboratory must take steps to break the emulsion before proceeding. Mechanical means of breaking the emulsion include the use of a glass stirring rod, filtration through glass wool, and other techniques. For emulsions that resist these techniques, centrifugation is nearly 100% effective.

If centrifugation is employed to break the emulsion, drain the organic layer into a centrifuge tube, cap the tube, and centrifuge for two to three minutes or until the phases separate. If the emulsion cannot be completely broken, collect as much of the organic phase as possible, and measure and record the volume of the organic phase collected.

If all efforts to break the emulsion fail, including centrifugation, and none of the organic phase can be collected, proceed with the dilute aliquot (Section 11.1.4.2). However, use of the dilute aliquot will sacrifice the sensitivity of the method, and may not be appropriate in all cases.

11.3.1.5 Drain the organic layer into a Kuderna-Danish (K–D) apparatus equipped with a 10-mL concentrator tube. Label the K–D apparatus. It may be necessary to pour the organic layer through a funnel containing anhydrous sodium sulfate to remove any traces of water from the extract.

11.3.1.6 Repeat the extraction (Section 11.3.1.1 through 11.3.1.5) two more times using another 200-mL of hexane for each extraction, combining the extracts in the K–D apparatus.

11.3.1.7 Proceed with concentration of the extract, as described in Section 11.4.

11.3.2 Separatory funnel extraction of either final effluents or in-process wastewaters.

11.3.2.1 Transfer the derivatized sample or QC aliquot to a 2-L separatory funnel.

11.3.2.2 Add 200 mL (±20 mL) of hexane to the separatory funnel. Cap the funnel and extract the sample by shaking the funnel for two to three minutes with periodic venting.

11.3.2.3 Allow the organic layer to separate from the water phase for a minimum of 10 minutes.

11.3.2.4 Drain the lower aqueous layer into the beaker used for derivatization (Section 11.2), or into a second clean 2-L separatory funnel. Transfer the solvent to a 1000-mL K–D flask. It may be necessary to pour the organic layer through a funnel containing anhydrous sodium sulfate to remove any traces of water from the extract.

11.3.2.5 The formation of emulsions can be expected in any solvent extraction procedure. If an emulsion forms, the laboratory must take steps to break the emulsion before proceeding. Mechanical means of breaking the emulsion include the use of a glass stirring rod, filtration through glass wool, and other techniques. For emulsions that resist these techniques, centrifugation may be required.

If centrifugation is employed to break the emulsion, drain the organic layer into a centrifuge tube, cap the tube, and centrifuge for two to three minutes or until the phases separate. If the emulsion cannot be completely broken, collect as much of the organic phase as possible, and measure and record the volume of the organic phase collected. If all efforts to break the emulsion, including centrifugation, fail and none of the organic phase can be collected, proceed with the dilute aliquot (Section 11.1.4.2). However, use of the dilute aliquot will sacrifice the sensitivity of the method, and may not be appropriate in all cases.

11.3.2.6 If drained into a beaker, transfer the aqueous layer to the 2-L separatory funnel (Section 11.3.2.1). Perform a second extraction using another 200 mL of fresh solvent.

11.3.2.7 Transfer the extract to the 1000-mL K–D flask in Section 11.3.2.4.

11.3.2.8 Perform a third extraction in the same fashion as above.

11.3.2.9 Proceed with concentration of the extract, as described in Section 11.4.

11.4 Macro concentration: Concentrate the extracts in separate 1000-mL K–D flasks equipped with 10-mL concentrator tubes. Add one to two clean boiling chips to the flask and attach a three-ball macro-Snyder column. Prewet the column by adding approximately 1 mL of hexane through the top. Place the K–D apparatus in a hot water bath so that the entire lower rounded surface of the flask is bathed with steam. Adjust the vertical position of the apparatus and the water temperature as required to complete the concentration in 15 to 20 minutes. At the proper rate of distillation, the balls of the column will actively chatter but the chambers will not flood. When the liquid has reached an apparent volume of 1 mL, remove the K–D apparatus from the bath and allow the solvent to drain and cool for at least 10 minutes. Remove the Snyder column and rinse the flask and its lower joint into the concentrator tube with 1 to 2 mL of hexane. A 5-mL syringe is recommended for this operation.

11.5 Micro-concentration: Final concentration of the extracts may be accomplished using either a micro-Snyder column or nitrogen evaporation.

11.5.1 Micro-Snyder column: Add a clean boiling chip and attach a two-ball micro-Snyder column to the concentrator tube. Prewet the column by adding approximately 0.5 mL hexane through the top. Place the apparatus in the hot water bath. Adjust the vertical position and the water temperature as required to complete the concentration in 5 to 10 minutes. At the proper rate of distillation, the balls of the column will actively chatter but the chambers will not flood. When the liquid reaches an apparent volume of approximately 0.2 mL, remove the apparatus from the water bath and allow to drain and cool for at least 10 minutes. Remove the micro-Snyder column and rinse its lower joint into the concentrator tube with approximately 0.2 mL of hexane. Adjust to a final volume of 0.5 mL.

11.5.2 Nitrogen evaporation: Transfer the concentrator tube to a nitrogen evaporation

device and direct a gentle stream of clean dry nitrogen into the concentrator. Rinse the sides of the concentrator tube with small volumes of hexane, and concentrate the extract to a final volume of 0.5 mL.

11.6 Spike each extract with 10 ∝L of the 2,2 -difluorobiphenyl IIS (Section 7.10) and transfer the concentrated extract to a clean screw-cap vial using hexane to rinse the concentrator tube. Seal the vial with a PTFE-lined lid, and mark the level on the vial. Label with the sample number and store in the dark at −20 to −10 ℃ until ready for analysis.

12.0 GCMS Analysis

12.1 Establish the following operating conditions:

Carrier gas flow: Helium at 30 cm/sec at 50 ℃
Injector temperature: 300 ℃
Initial temperature: 50 ℃
Temperature program: 8 ℃/min to 270 ℃
Final hold: Until after 2,6-dichlorosyringaldehyde elutes

Adjust the GC conditions to meet the requirements in Section 9.6.1.1 and Table 2 for analyte separation and sensitivity. Once optimized, the same GC conditions must be used for the analysis of all standards, blanks, IPR and OPR aliquots, and samples.

12.2 Bring the concentrated extract (Section 11.6) or standard (Sections 7.13 and 7.14) to room temperature and verify that any precipitate has redissolved. Verify the level on the extract (Sections 7.13, 7.14, and 11.6) and bring to the mark with solvent if required.

12.3 Inject a 1-∝L volume of the standard solution or extract using on-column or splitless injection. For 0.5 mL extracts, this 1-∝L injection volume will contain 50 ng of the DFB internal standard. If an injection volume other than 1 ∝L is used, that volume must contain 50 ng of DFB.

12.4 Start the GC column temperature ramp upon injection. Start MS data collection after the solvent peak elutes. Stop data collection after the 2,6-dichlorosyringaldehyde peak elutes. Return the column to the initial temperature for analysis of the next sample.

13.0 Analysis of Complex Samples

Some samples may contain high levels (>1000 ∝g/L) of the compounds of interest, interfering compounds, and/or other phenolic materials. Some samples will not concentrate to 0.5 mL (Section 11.5); others will overload the GC column and/or mass spectrometer; others may contain amounts of phenols that may exceed the capacity of the derivatizing agent.

13.1 Analyze the dilute aliquot (Section 11.1.4) when the sample will not concentrate to 0.5 mL. If a dilute aliquot was not extracted, and the sample holding time (Section 8.4) has not been exceeded, dilute an aliquot of sample with reagent water, and derivatize and extract it (Section 11.1.4). Otherwise, dilute the extract (Section 14.7.3) and quantitate it by the internal standard method (Section 14.3).

13.2 Recovery of the 2,2 -difluorobiphenyl instrument internal standard: The EICP area of the internal standard should be within a factor of two of the area in the OPR or VER standard (Section 9.6). If the absolute areas of the labeled compounds and the SMIS are within a factor of two of the respective areas in the OPR or VER standard, and the DFB internal standard area is less than one-half of its respective area, then internal standard loss in the extract has occurred. In this case, analyze the extract from the dilute aliquot (Section 11.1.4).

13.3 Recovery of labeled compounds and the sample matrix internal standard (SMIS): SMIS and labeled compound recovery specifications have been developed for samples with and without the addition of ascorbic acid. Compare the recoveries to the appropriate limits in Table 5.

13.3.1 If SMIS or labeled compound recoveries are outside the limits given in Table 5 and the associated OPR analysis meets the recovery criteria, the extract from the dilute aliquot (Section 11.1.4) is analyzed as in Section 14.7.

13.3.2 If labeled compound or SMIS recovery is outside the limits given in Table 5 and the associated OPR analysis did not meet recovery criteria, a problem in the derivatization/extraction/concentration of the sample is indicated, and the sample must be rederivatized and reanalyzed.

14.0 Data Analysis and Calculations

14.1 Qualitative determination: Identification is accomplished by comparison of data from analysis of a sample or blank with data stored in the mass spectral libraries. Identification of a compound is confirmed when the following criteria are met:

14.1.1 The signals for m/z 43 (to indicate the presence of the acetyl derivative) and all characteristic m/z's stored in the spectral library (Section 10.2.4) shall be present and shall maximize within the same two consecutive scans.

14.1.2 Either (1) the background corrected EICP areas, or (2) the corrected relative intensities of the mass spectral peaks at the GC peak maximum shall agree within a factor of two (0.5 to 2 times) for all m/z's stored in the library.

14.1.3 The relative retention time shall be within the window specified in Table 2.

14.1.4 The m/z's present in the mass spectrum from the component in the sample that are not present in the reference mass spectrum shall be accounted for by contaminant or background ions. If the mass spectrum is contaminated, an experienced spectrometrist (Section 1.4) shall determine the presence or absence of the compound.

14.2 Quantitative determination by isotope dilution: By adding a known amount of a labeled compound to every sample prior to derivatization and extraction, correction for recovery of the pollutant can be made because the pollutant and its labeled analog exhibit the same effects upon derivatization, extraction, concentration, and gas chromatography. Relative response (RR) values for sample mixtures are used in conjunction with calibration curves described in Section 10.4 to determine concentrations directly, so long as labeled compound spiking levels are constant. For the phenol example given in Figure 1 (Section 10.4.1), RR would be equal to 1.114. For this RR value, the phenol calibration curve given in Figure 1 indicates a concentration of 27 ∝g/mL in the sample extract (C_{ex}).

14.2.1 Compute the concentration in the extract using the response ratio determined from calibration data (Section 10.4) and the following equation:

$$C_{ex}(\propto g/mL) = (A_n \quad C_l)/(A_l \quad RR)$$

Where:

C_{ex} = concentration of the pollutant in the extract.
A_n = area of the characteristic m/z for the pollutant.
C_l = concentration of the labeled compound in the extract.
A_l = area of the characteristic m/z for the labeled compound.
RR = response ratio from the initial calibration.

14.2.2 For the IPR (Section 9.3.2) and OPR (Section 9.6), compute the percent recovery of each pollutant using the equation in Section 14.6. The percent recovery is used for the evaluation of method and laboratory performance, in the form of IPR (Section 9.3.2) and OPR (Section 9.6).

14.3 Quantitative determination by internal standard: Compute the concentration using the response factor determined from calibration data (Section 10.5) and the following equation:

$$C_{ex}(\propto g/mL) = (A_s \quad C_{is})/(A_{is} \quad RF)$$

Where:

C_{ex} = concentration of the pollutant in the extract.
A_s = area of the characteristic m/z for the pollutant.
C_{is} = concentration of the internal standard in the extract (see note below).
A_{is} = area of the characteristic m/z for the internal standard.
RF = response factor from the initial calibration.

Note: When this equation is used to compute the extract concentrations of native compounds without labeled analogs, use the area (A_{is}) and concentration (C_{is}) of 3,4,5-trichlorophenol (SMIS) as the internal standard.

For the IPR (Section 9.3.2) and OPR (Section 9.6), compute the percent recovery using the equation in Section 14.6.

Note: Separate calibration curves will be required for samples with and without the addition of ascorbic acid, and also for both extraction procedures (stir-bar and separatory funnel) where applicable.

14.4 Compute the concentration of the labeled compounds and the SMIS using the equation in Section 14.3, but using the area and concentration of the 2,2 -difluorobiphenyl as the internal standard, and the area of the labeled compound or SMIS as A_s.

14.5 Compute the concentration of each pollutant compound in the sample using the following equation:

$$C_s = (\mu g/L) = \frac{(C_{ex} \quad V_{ex})}{V_o}$$

Where:

C_s = Concentration of the pollutant in the sample.

C_{ex} = Concentration of the pollutant in the extract.

V_{ex} = Volume of the concentrated extract (typically 0.5 mL).

V_o = Volume of the original sample in liters.

14.6 Compute the recovery of each labeled compound and the SMIS as the ratio of concentration (or amount) found to the concentration (or amount) spiked, using the following equation:

$$\text{Percent recovery} = \frac{\text{Concentration found}}{\text{Concentration spiked}} \quad 100$$

These percent recoveries are used to assess method performance according to Sections 9 and 13.

14.7 If the EICP area at the quantitation m/z for any compound exceeds the calibration range of the system, three approaches are used to obtain results within the calibration range.

14.7.1 If the recoveries of all the labeled compounds in the original sample aliquot meet the limits in Table 5, then the extract of the sample may be diluted by a maximum of a factor of 10, and the diluted extract reanalyzed.

14.7.2 If the recovery of any labeled compound is outside its limits in Table 5, or if a tenfold dilution of the extract will not bring the pollutant within the calibration range, then extract and analyze a dilute aliquot of the sample (Section 11). Dilute 100 mL, 10 mL, or an appropriate volume of sample to 1000 mL with reagent water and extract per Section 11.

14.7.3 If the recoveries of all labeled compounds in the original sample aliquot (Section 14.7.1) meet the limits in Table 5, and if the sample holding time has been exceeded, then the original sample extract is diluted by successive factors of 10, the DFB internal standard is added to give a concentration of 50 µg/mL in the diluted extract, and the diluted extract is analyzed. Quantitation of all analytes is performed using the DFB internal standard.

14.7.4 If the recoveries of all labeled compounds in the original sample aliquot (Section 14.7.1) or in the dilute aliquot (Section 14.7.2) (if a dilute aliquot was analyzed) do not meet the limits in Table 5, and if the holding time has been exceeded, re-sampling is required.

14.8 Results are reported for all pollutants, labeled compounds, and the sample matrix internal standard in standards, blanks, and samples, in units of µg/L.

14.8.1 Results for samples which have been diluted are reported at the least dilute level at which the area at the quantitation m/z is within the calibration range (Section 14.7).

14.8.2 For compounds having a labeled analog, results are reported at the least dilute level at which the area at the quantitation m/z is within the calibration range (Section 14.7) and the labeled compound recovery is within the normal range for the method (Section 13.3).

15.0 Method Performance

15.1 Single laboratory performance for this method is detailed in References 1, 2, and 11. Acceptance criteria were established from multiple laboratory use of the draft method.

15.2 A chromatogram of the ongoing precision and recovery standard (Section 7.14) is shown in Figure 4.

16.0 Pollution Prevention

16.1 The solvents used in this method pose little threat to the environment when recycled and managed properly.

16.2 Standards should be prepared in volumes consistent with laboratory use to minimize the volume of expired standards to be disposed.

17.0 Waste Management

17.1 It is the laboratory's responsibility to comply with all federal, state, and local regulations governing waste management, particularly the hazardous waste identification rules and land disposal restrictions, and to protect the air, water, and land by minimizing and controlling all releases from fume hoods and bench operations. Compliance with all sewage discharge permits and regulations is also required.

17.2 Samples preserved with HCl or H_2SO_4 to pH < 2 are hazardous and must be neutralized before being disposed, or must be handled as hazardous waste.

17.3 For further information on waste management, consult "The Waste Management Manual for Laboratory Personnel", and "Less is Better: Laboratory Chemical Management for Waste Reduction", both available from the American Chemical Society's Department of Government Relations and Science Policy, 1155 16th Street N.W., Washington, D.C. 20036.

18.0 References

18.1 "Chlorinated Phenolics in Water by In Situ Acetylation/GC/MS Determination," Method CP–86.01, National Council of the Paper Industry for Air and Stream Improvement, Inc., 260 Madison Avenue, New York, NY 10016 (July 1986).

18.2 "6240-Chlorinated Phenolics (Interim Standard)," Draft Version, U.S. Environmental Protection Agency, Manchester Laboratory, Manchester, Washington.

18.3 "Performance Tests for the Evaluation of Computerized Gas Chromatography/Mass Spectrometry Equipment and Laboratories," USEPA, EMSL Cincinnati, OH 45268, EPA–600/4–80–025 (April 1980).

18.4 "Working with Carcinogens," DHEW, PHS, CDC, NIOSH, Publication 77–206 (August 1977).

18.5 "OSHA Safety and Health Standards, General Industry," OSHA 2206, 29 CFR 1910 (January 1976).

18.6 "Safety in Academic Chemistry Laboratories," ACS Committee on Chemical Safety (1979).

18.7 "Interlaboratory Validation of U. S. Environmental Protection Agency Method 1625A, Addendum Report," SRI International, Prepared for Analysis and Evaluation Division (WH–557), USEPA, 401 M St. SW, Washington, DC 20460 (January 1985).

18.8 "Handbook of Analytical Quality Control in Water and Wastewater Laboratories," USEPA, EMSL, Cincinnati, OH 45268, EPA–600/4–79–019 (March 1979).

18.9 "Standard Practice for Sampling Water," ASTM Annual Book of Standards, ASTM, Philadelphia, PA, 76 (1980).

18.10 "Methods 330.4 and 330.5 for Total Residual Chlorine," USEPA, EMSL, Cincinnati, OH 45268, EPA 600/4–70–020 (March 1979).

18.11 "Determination of Chlorophenolics, Special Analytical Services Contract 1047, Episode 1886," Analytical Technologies, Inc., Prepared for W. A. Telliard, Industrial Technology Division (WH–552), USEPA, 401 M St. SW, Washington, DC 20460 (June 1990).

18.12 "Determination of Chlorophenolics by GCMS, Development of Method 1653," Analytical Technologies, Inc., Prepared for W. A. Telliard, Industrial Technology Division (WH–552), USEPA, 401 M St. SW, Washington, DC 20460 (May 1991).

19.0 Tables and Figures

TABLE 1.—CHLOROPHENOLIC COMPOUNDS DETERMINED BY GCMS USING ISOTOPE DILUTION AND INTERNAL STANDARD TECHNIQUES

Compound	Pollutant		Labeled compound		
	CAS registry	EPA–EGD	Analog	CAS registry	EPA–EGD
4-chlorophenol	106–48–9	1001			
2,4-dichlorophenol	120–83–2	1002	d_3	93951–74–7	1102
2,6-dichlorophenol	87–65–0	1003			
2,4,5-trichlorophenol	95–95–4	1004			
2,4,6-trichlorophenol	88–06–2	1005			
2,3,4,6-tetrachlorophenol	58–90–2	1006			
pentachlorophenol	87–86–5	1007	$^{13}C_6$	85380–74–1	1107
4-chloroguaiacol	16766–30–6	1008	$^{13}C_6$	136955–39–0	1108
3,4-dichloroguaiacol	77102–94–4	1009			
4,5-dichloroguaiacol	2460–49–3	1010			
4,6-dichloroguaiacol	16766–31–7	1011			
3,4,5-trichloroguaiacol	57057–83–7	1012			
3,4,6-trichloroguaiacol	60712–44–9	1013			
4,5,6-trichloroguaiacol	2668–24–8	1014	$^{13}C_6$	136955–40–3	1114
tetrachloroguaiacol	2539–17–5	1015	$^{13}C_6$	136955–41–4	1115
4-chlorocatechol	2138–22–9	1016			
3,4-dichlorocatechol	3978–67–4	1017			
3,6-dichlorocatechol	3938–16–7	1018			
4,5-dichlorocatechol	3428–24–8	1019	$^{13}C_6$	136955–42–5	1119
3,4,5-trichlorocatechol	56961–20–7	1020			
3,4,6-trichlorocatechol	32139–72–3	1021			
tetrachlorocatechol	1198–55–6	1022	$^{13}C_6$	136955–43–6	1122
5-chlorovanillin	19463–48–0	1023	$^{13}C_6$	136955–44–7	1123
6-chlorovanillin	18268–76–3	1024			
5,6-dichlorovanillin	18268–69–4	1025			
2-chlorosyringaldehyde	76341–69–0	1026			
2,6-dichlorosyringaldehyde	76330–06–8	1027			
trichlorosyringol	2539–26–6	1028			
Sample matrix internal standard (SMIS)					
3,4,5-trichlorophenol	609–19–8	184			
Instrument internal standard (IIS)					
2,2'-difluorobiphenyl	388–82–9	164			

TABLE 2.—GAS CHROMATOGRAPHY AND METHOD DETECTION LIMITS FOR CHLOROPHENOLICS

EGD No.[1]	Compound	Retention time mean (sec)[2]	EGD ref No.	RRT window[3]	Minimum level[4] (∞g/L)	MDL[5] (∞g/L)
1001	4-chlorophenol	691	184	0.651–0.681	1.25	1.11
1003	2,6-dichlorophenol	796	184	0.757–0.779	2.5	1.39
1102	2,4-dichlorophenol-d_3	818	164	0.986–0.998		
1202	2,4-dichlorophenol	819	1102	0.997–1.006	2.5	0.15
164	2,2'-difluorobiphenyl (I.S.)	825	164	1.000		
1108	4-chloroguaiacol-$^{13}C_6$	900	164	1.077–1.103		
1208	4-chloroguaiacol	900	1108	0.998–1.002	1.25	0.09
1005	2,4,6-trichlorophenol	920	184	0.879–0.895	2.5	0.71
1004	2,4,5-trichlorophenol	979	184	0.936–0.952	2.5	0.57
1016	4-chlorocatechol	1004	184	0.961–0.975	1.25	0.59
1011	4,6-dichloroguaiacol	1021	184	0.979–0.991	2.5	0.45
1009	3,4-dichloroguaiacol	1029	184	0.986–0.998	2.5	0.52
184	3,4,5-trichlorophenol (I.S.)	1037	164	1.242–1.272		
1010	4,5-dichloroguaiacol	1071	184	1.026–1.040	2.5	0.52
1018	3,6-dichlorocatechol	1084	184	1.037–1.053	2.5	0.57
1006	2,3,4,6-tetrachlorophenol	1103	184	1.050–1.078	2.5	0.38
1123	5-chlorovanillin-$^{13}C_6$	1111	164	1.327–1.367		
1223	5-chlorovanillin	1111	1123	0.998–1.001	2.5	1.01
1013	3,4,6-trichloroguaiacol	1118	184	1.066–1.090	2.5	0.46
1024	6-chlorovanillin	1122	184	1.070–1.094	2.5	0.94
1017	3,4-dichlorocatechol	1136	184	1.083–1.105	2.5	0.60
1119	4,5-dichlorocatechol-$^{13}C_6$	1158	164	1.384–1.424		
1219	4,5-dichlorocatechol	1158	1119	0.998–1.001	2.5	0.24
1012	3,4,5-trichloroguaiacol	1177	184	1.120–1.160	2.5	0.49
1114	4,5,6-trichloroguaiacol-$^{13}C_6$	1208	164	1.444–1.484		
1214	4,5,6-trichloroguaiacol	1208	1114	0.998–1.002	2.5	0.25
1021	3,4,6-trichlorocatechol	1213	184	1.155–1.185	5.0	0.44
1025	5,6-dichlorovanillin	1246	184	1.182–1.222	5.0	0.80

TABLE 2.—GAS CHROMATOGRAPHY AND METHOD DETECTION LIMITS FOR CHLOROPHENOLICS—Continued

EGD No.[1]	Compound	Retention time mean (sec)[2]	EGD ref No.	RRT window[3]	Minimum level[4] (∝g/L)	MDL[5] (∝g/L)
1026	2-chlorosyringaldehyde	1255	184	1.190–1.230	2.5	0.87
1107	pentachlorophenol-$^{13}C_6$	1267	164	1.511–1.561		
1207	pentachlorophenol	1268	1107	0.998–1.002	5.0	0.28
1020	3,4,5-trichlorocatechol	1268	184	1.208–1.238	5.0	0.53
1115	tetrachloroguaiacol-$^{13}C_6$	1289	164	1.537–1.587		
1215	tetrachloroguaiacol	1290	1115	0.998–1.002	5.0	0.23
1028	trichlorosyringol	1301	184	1.240–1.270	2.5	0.64
1122	tetrachlorocatechol-$^{13}C_6$	1365	164	1.630–1.690		
1222	tetrachlorocatechol	1365	1122	0.998–1.002	5.0	0.76
1027	2,6-dichlorosyringaldehyde	1378	184	1.309–1.349	5.0	1.13

[1] Four digit numbers beginning with 10 indicate a pollutant quantified by the internal standard method; four digit numbers beginning with 11 indicate a labeled compound quantified by the internal standard method; four digit numbers beginning with 12 indicate a pollutant quantified by isotope dilution.
[2] The retention times in this column are based on data from a single laboratory (reference 12), utilizing the GC conditions in Section 11.
[3] Relative retention time windows are estimated from EPA Method 1625.
[4] The minimum level (ML) is defined as the level at which the entire analytical system must give a recognizable signal and acceptable calibration point for the analyte. It is equivalent to the concentration of the lowest calibration standard, assuming that all method-specified sample weights, volumes, and cleanup procedures have been employed.
[5] 40 CFR Part 136, Appendix B; from reference 2.

TABLE 3.—DFTPP MASS INTENSITY SPECIFICATIONS[1]

Mass	Intensity required
51	8 to 82% of m/z 198.
68	Less than 2% of m/z 69.
69	11 to 91% of m/z 198.
70	Less than 2% of m/z 69.
127	32 to 59% of m/z 198.
197	Less than 1% of m/z 198.
198	Base peak, 100% abundance.
199	4 to 9% of m/z 198.
275	11 to 30% of m/z 198.
441	44 to 110% of m/z 443.
442	30 to 86% of m/z 198.
443	14 to 24% of m/z 442.

[1] Reference 7.

TABLE 4.—CHARACTERISTIC M/Z'S OF CHLOROPHENOLIC COMPOUNDS

Compound	Primary m/z
4-chlorophenol	128
2,4-dichlorophenol	162
2,4-dichlorophenol-d_3	167
2,6-dichlorophenol	162
2,4,5-trichlorophenol	196
2,4,6-trichlorophenol	196
2,3,4,6-tetrachlorophenol	232
pentachlorophenol	266
pentachlorophenol$-^{13}C_6$	272
4-chloroguaiacol	158
4-chloroguaiacol$-^{13}C_6$	164
3,4-dichloroguaiacol	192
4,5-dichloroguaiacol	192
4,6-dichloroguaiacol	192
3,4,5-trichloroguaiacol	226
3,4,6-trichloroguaiacol	226
4,5,6-trichloroguaiacol	226
4,5,6-trichloroguaiacol$-^{13}C_6$	234
tetrachloroguaiacol	262
tetrachloroguaiacol$-^{13}C_6$	268
4-chlorocatechol	144
3,4-dichlorocatechol	178
3,6-dichlorocatechol	178
4,5-dichlorocatechol	178
4,5-dichlorocatechol$-^{13}C_6$	184
3,4,5-trichlorocatechol	212
3,4,6-trichlorocatechol	212

TABLE 4.—CHARACTERISTIC M/Z'S OF CHLOROPHENOLIC COMPOUNDS—Continued

Compound	Primary m/z
tetrachlorocatechol	248
tetrachlorocatechol-$^{13}C_6$	254
5-chlorovanillin	186
5-chlorovanillin-$^{13}C_6$	192
6-chlorovanillin	186
5,6-dichlorovanillin	220
2-chlorosyringaldehyde	216
2,6-dichlorosyringaldehyde	250
trichlorosyringol	256
Sample Matrix Internal Standard (SMIS)	
3,4,5-trichlorophenol	196
Instrument Internal Standard (IIS)	
2,2 -difluorobiphenyl	190

TABLE 5.—ACCEPTANCE CRITERIA FOR PERFORMANCE TESTS [1]

EGD No.[2]	Compound	Test conc.[3] (µg/mL)	Initial precision and recovery sec. 9.3.2 (percent)		Ongoing recovery sec. 9.6 (percent)	Labeled compound and SMIS recovery sec. 9.4 and 14.6	
			s	X		With ascorbic acid P (%)	Without ascorbic acid P (%)
1001	4-chlorophenol	25	64	72–144	40–236		
1202	2,4-dichlorophenol	50	14	84–120	84–118		
1102	2,4-dichlorophenol-d_3	25	54	64–160	56–170	58–135	27–143
1003	2,6-dichlorophenol	50	20	66–148	58–170		
1004	2,4,5-trichlorophenol	50	14	78–140	82–128		
1005	2,4,6-trichlorophenol	50	20	72–142	72–146		
1006	2,3,4,6-tetrachlorophenol	50	14	80–132	82–132		
1207	pentachlorophenol	100	6	90–111	84–120		
1107	pentachlorophenol-$^{13}C_6$	25	21	58–169	61–157	8–143	27–167
1208	4-chloroguaiacol	25	20	88–120	88–120		
1108	4-chloroguaiacol-$^{13}C_6$	25	104	68–148	64–152	59–121	43–168
1009	3,4-dichloroguaiaco[4]	50	18	80–126	82–126		
1010	4,5-dichloroguaiacol	50	14	82–121	80–128		
1011	4,6-dichloroguaiacol	50	16	82–126	86–120		
1012	3,4,5-trichloroguaiacol	50	16	78–130	80–134		
1013	3,4,6-trichloroguaiacol	50	16	64–152	74–140		
1214	4,5,6-trichloroguaiacol	50	14	92–106	88–116		
1114	4,5,6-trichloroguaiacol-$^{13}C_6$	25	48	66–146	74–140	48–131	51–139
1215	tetrachloroguaiacol	100	7	84–115	81–126		
1115	tetrachloroguaiacol-$^{13}C_6$	25	22	57–173	65–161	35–120	27–161
1016	4-chlorocatechol	25	48	76–140	80–124		
1017	3,4-dichlorocatechol	50	24	66–154	78–134		
1018	3,6-dichlorocatechol	50	16	78–136	84–126		
1219	4,5-dichlorocatechol	50	8	84–118	86–122		
1119	4,5-dichlorocatechol-$^{13}C_6$	25	78	68–144	66–142	33–129	0–190
1020	3,4,5-trichlorocatechol	100	17	60–166	72–128		
1021	3,4,6-trichlorocatechol[4]	100	17	74–138	64–149		
1222	tetrachlorocatechol	100	29	46–234	81–132		
1122	tetrachlorocatechol-$^{13}C_6$	25	39	48–227	63–152	14–118	0–184
1223	5-chlorovanillin	50	20	94–208	84–118		
1123	5-chlorovanillin-$^{13}C_6$	25	84	68–160	70–144	51–126	32–254
1024	6-chlorovanillin	50	22	82–128	80–126		
1025	5,6-dichlorovanillin	100	9	67–146	77–140		
1026	2-chlorosyringaldehyde	50	28	76–130	72–156		
1027	2,6-dichlorosyringaldehyde	100	14	82–129	60–183		
1028	trichlorosyringol	50	18	76–136	66–174		
Sample Matrix Internal Standard							
184	3,4,5-trichlorophenol	100	47	62–185	68–144	56–116	24–167

[1] Specifications derived from multi-laboratory testing of draft method.
[2] Four-digit numbers beginning with 10 indicate a pollutant quantified by the internal standard method; four-digit numbers beginning with 11 indicate a labeled compound quantified by the internal standard method; four-digit numbers beginning with 12 indicate a pollutant quantified by isotope dilution.
[3] Test concentrations are in units of µg/mL.
[4] Specification derived from isomer.

BILLING CODE 6560–50–P

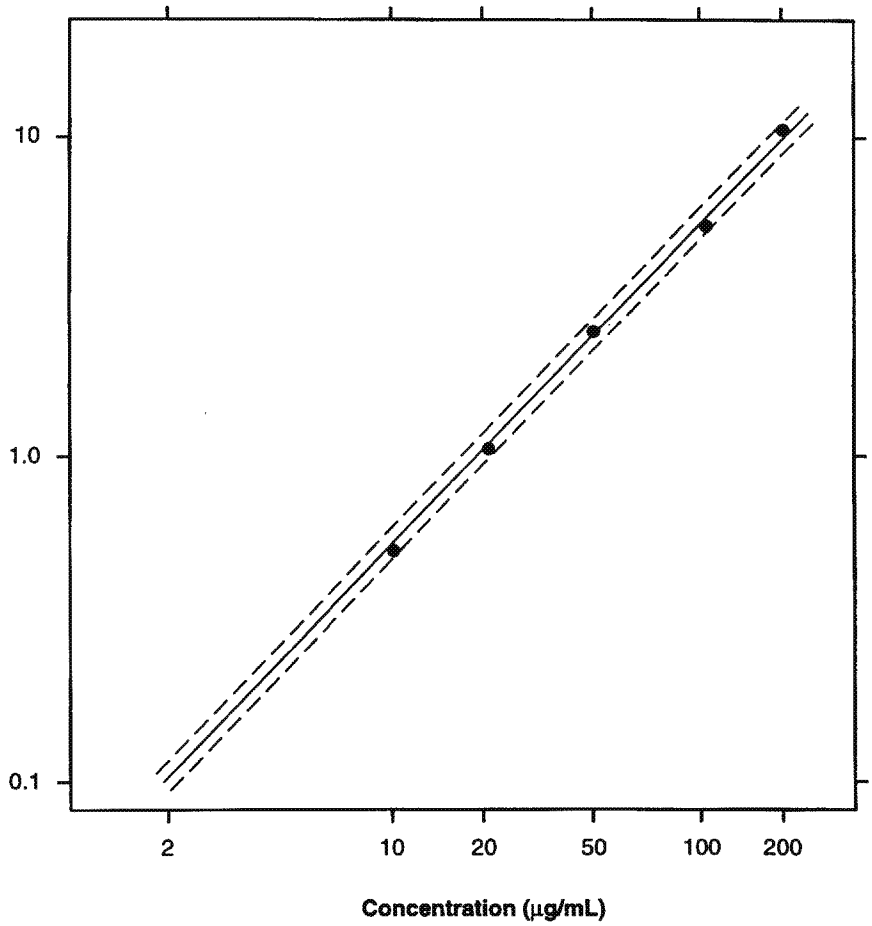

The dotted lines enclose a ±10% error window.

52-020-21A

Figure 1. Relative Response Calibration Curve for Phenol

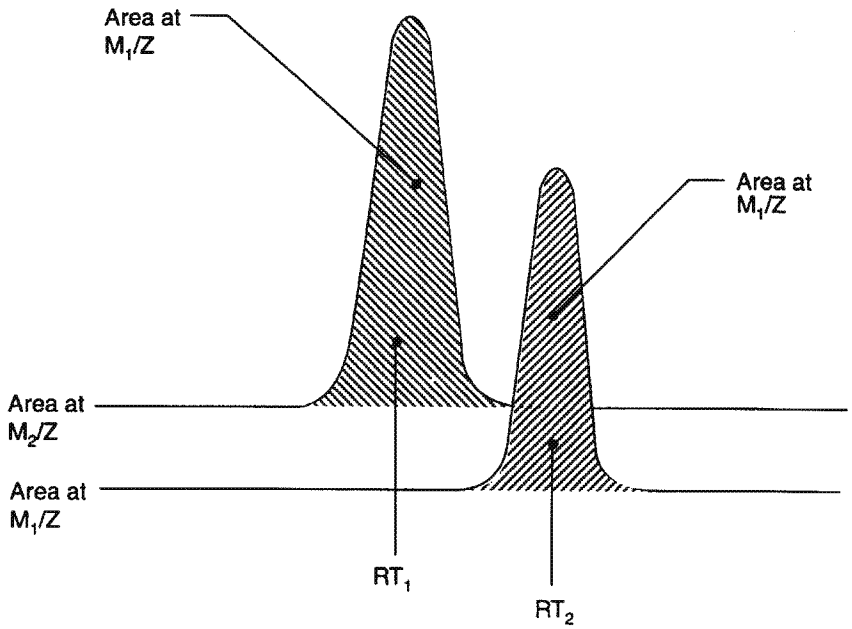

52-020-22A

Figure 2. Extracted Ion-Current Profiles for Chromatographically Resolved Labeled (M_2/Z) and Unlabeld (M_1/Z) Pairs

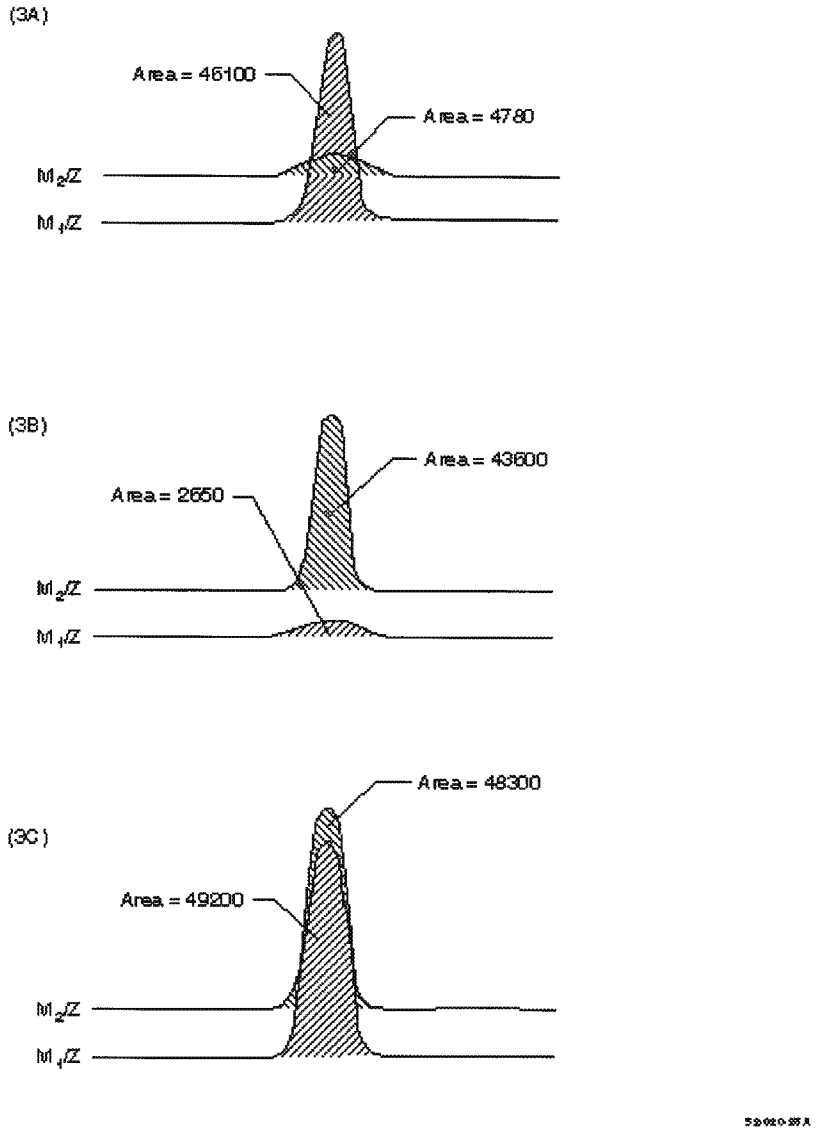

Figure 3. Extracted Ion-Current Profiles for (3A) Unlabeled Compound, (3B) Labeled Compound, and (3C) Equal Mixture of Unlabeled and Labeled Compounds.

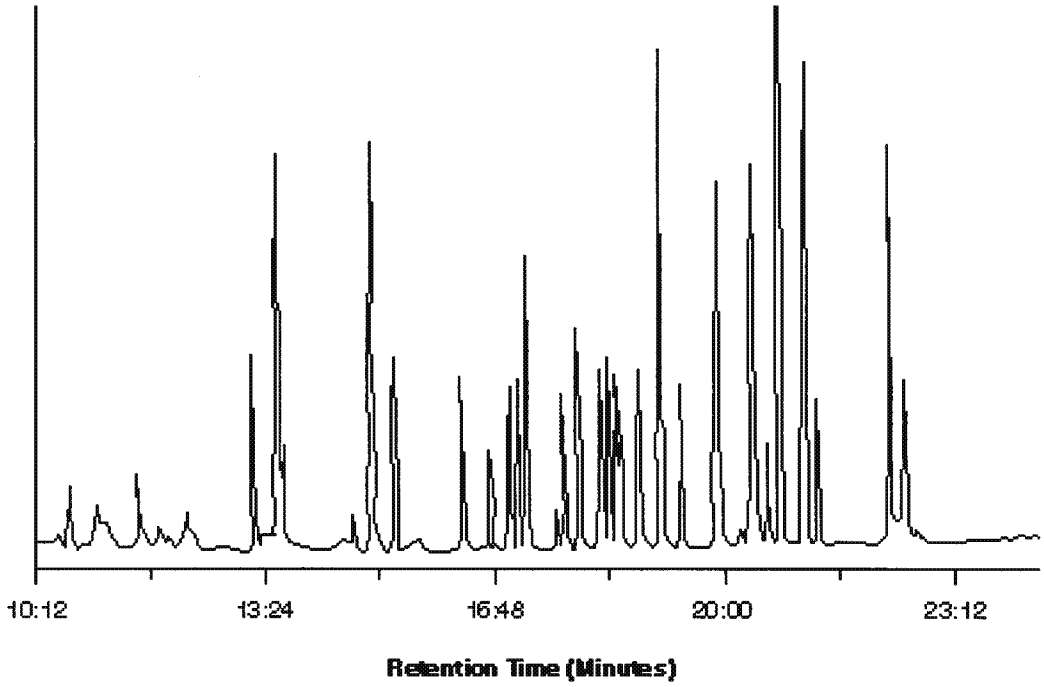

Figure 4. Chromatogram of Chlorophenolics

BILLING CODE 6560–50–C

20.0 Glossary of Definitions and Purposes

These definitions and purposes are specific to this method but have been conformed to common usage as much as possible.

20.1 Units of weight and measure and their abbreviations

20.1.1 Symbols.

°C degrees Celsius
µL microliter
< less than
> greater than
% percent

20.1.2 Alphabetical characters.

cm centimeter
g gram
h hour
ID inside diameter
in. inch
L liter
M Molecular ion
m meter
mg milligram
min minute
mL milliliter
mm millimeter
m/z mass-to-charge ratio
N normal; gram molecular weight of solute divided by hydrogen equivalent of solute, per liter of solution
OD outside diameter
pg picogram
ppb part-per-billion
ppm part-per-million
ppt part-per-trillion
psig pounds-per-square inch gauge
v/v volume per unit volume
w/v weight per unit volume

20.2 Definitions and acronyms (in alphabetical order).

Analyte: A chlorophenolic tested for by this method.

The analytes are listed in Table 1.

Calibration standard (CAL): A solution prepared from a secondary standard and/or stock solutions and used to calibrate the response of the instrument with respect to analyte concentration.

Calibration verification standard (VER): The mid-point calibration standard (CS3) that is used to verify calibration. See Table 4.

Chlorophenolics: collectively, the analytes listed in Table 1.

CS1, CS2, CS3, CS4, CS5: See Calibration standards and Table 4.

Field blank: An aliquot of reagent water or other reference matrix that is placed in a sample container in the laboratory or the field, and treated as a sample in all respects, including exposure to sampling site conditions, storage, preservation, and all analytical procedures. The purpose of the field blank is to determine if the field or sample transporting procedures and environments have contaminated the sample.

GC: Gas chromatograph or gas chromatography.

HRGC: High resolution GC.

IPR: Initial precision and recovery; four aliquots of the diluted PAR standard analyzed to establish the ability to generate acceptable precision and accuracy. An IPR is performed prior to the first time this method is used and any time the method or instrumentation is modified.

K–D: Kuderna-Danish concentrator; a device used to concentrate the analytes in a solvent.

Laboratory blank: See Method blank.

Laboratory control sample (LCS): See Ongoing precision and recovery standard (OPR).

Laboratory reagent blank: See Method blank.

May: This action, activity, or procedural step is neither required nor prohibited.

May not: This action, activity, or procedural step is prohibited.

Method blank: An aliquot of reagent water that is treated exactly as a sample including exposure to all glassware, equipment, solvents, reagents, internal standards, and surrogates that are used with samples. The method blank is used to determine if analytes or interferences are present in the laboratory environment, the reagents, or the apparatus.

Minimum level (ML): The level at which the entire analytical system must give a recognizable signal and acceptable calibration point for the analyte. It is equivalent to the concentration of the lowest calibration standard, assuming that all method-specified sample weights, volumes, and cleanup procedures have been employed.

MS: Mass spectrometer or mass spectrometry.

Must: This action, activity, or procedural step is required.

OPR: Ongoing precision and recovery standard (OPR); a laboratory blank spiked with known quantities of analytes. The OPR is analyzed exactly like a sample. Its purpose is to assure that the results produced by the laboratory remain within the limits specified in this method for precision and recovery.

PAR: Precision and recovery standard; secondary standard that is diluted and spiked to form the IPR and OPR.

Preparation blank: See Method blank.

Primary dilution standard: A solution containing the specified analytes that is purchased or prepared from stock solutions and diluted as needed to prepare calibration solutions and other solutions.

Quality control check sample (QCS): A sample containing all or a subset of the analytes at known concentrations. The QCS is obtained from a source external to the laboratory or is prepared from a source of standards different from the source of calibration standards. It is used to check laboratory performance with test materials prepared external to the normal preparation process.

Reagent water: Water demonstrated to be free from the analytes of interest and potentially interfering substances at the method detection limit for the analyte.

Relative standard deviation (RSD): The standard deviation times 100 divided by the mean.

RF: Response factor. See Section 10.5.1.

RR: Relative response. See Section 10.4.4.

RSD: See Relative standard deviation.

Should: This action, activity, or procedural step is suggested but not required.

Stock solution: A solution containing an analyte that is prepared using a reference material traceable to EPA, the National Institute of Science and Technology (NIST), or a source that will attest to the purity and authenticity of the reference material.

VER: See Calibration verification standard.

[FR Doc. 98–9613 Filed 4–14–98; 8:45 am]

BILLING CODE 6560–50–P

Message

From: Holmstead, Jeff [jeff.holmstead@bracewell.com]
Sent: 3/31/2020 8:56:07 PM
To: Bodine, Susan [bodine.susan@epa.gov]
CC: Idsal, Anne [idsal.anne@epa.gov]; Gunasekara, Mandy [gunasekara.Mandy@epa.gov]
Subject: Delek Requests for No Action Assurance for Critical Infrastructure Facilities -- Contains CBI
Attachments: 2020-03-31_Delek_-_COVID_19_No_Action_Assurance_Request_-_Tier_3_Program_FINAL.pdf; 2020-03-31_Delek_-_COVID_19_No_Action_Assurance_Request_-_Benzene_Standards_FINAL.pdf

Importance: High

On behalf of Delek Refining Company, I am submitting the attached Requests for No Action Assurance for Critical Infrastructure Facilities under your March 26, 2020 memorandum titled *COVID-19 Implications for EPA's Enforcement and Compliance Assurance Program.* Please note that these requests contain confidential business information (CBI) about the financial impact of the COVID-19 pandemic on Delek and its four small refineries.

Please let me know if you need further information regarding these requests or if it would be helpful to schedule a conference call to discuss them.

Best Regards,

Jeff Holmstead

JEFF HOLMSTEAD
Partner
jeff.holmstead@bracewell.com | download v-card
T: +1.202.828.5852 | F: +1.800.404.3970

BRACEWELL LLP
2001 M Street NW, Suite 900 | Washington, D.C. | 20036-3310
bracewell.com | profile | LinkedIn | Twitter

CONFIDENTIALITY STATEMENT
This message is sent by a law firm and may contain information that is privileged or confidential. If you received this transmission in error, please notify the sender by reply e-mail and delete the message and any attachments.

Message

From: Maisano, Frank [frank.maisano@bracewell.com]
Sent: 5/1/2020 8:13:14 PM
To: Maisano, Frank [frank.maisano@bracewell.com]
Subject: Harris Raises Concerns about Harvard Study Flaw
Attachments: Harris COVID air study ltr.pdf

Friends,

Rep Andy Harris, one of Congress' few doctors, sent a letter today to HHS Secretary Azar and EPA Administrator Wheeler urging they undertake an assessment of recent claims by a pre-publication study by Harvard's Chan School of Public Health related to the relationship between Particulate Matter levels and COVID-19 mortality.

See the attached letter…

We have been tracking the Harvard issue just because Jeff and I are crazy. But I thought this piece from InsideEPA featuring an interview with CASAC Chair Dr. Tony Cox and a few other things would be helpful.

Frank Maisano
202-997-5932

1) A few good resources/experts:

- **Dr. Tony Cox**, Chair of EPA Clean Air Science Advisory Committee: Ex. 6 (303)-388-1778 (Phone); Full bio
- **Dr. Stan Young**, PhD statistician and member of EPA Science Advisory Board. 919 219 2030; Ex. 6 full bio
- **Dr. Robert Phalen**, UC—Irvine School of Medicine and member of EPA Science Advisory Board: rfphalen@uci.edu; full bio
- **Dr. Geoffrey Kabat**, epidemiologist, SUNY-Stony Brook: Ex. 6 full bio
- **Dr. Fred Lipfert**, air pollution expert, retired from Brookhaven National Laboratory Ex. 6 ; has already written on COVID and PM here: https://www.acsh.org/news/2020/04/10/never-let-good-crisis-go-waste---air-pollution-edition-14703 https://www.acsh.org/profile/fred-lipfert-phd

2) Clint Woods who was Bill Wehrum's deputy in the EPA Air Office is now at Americans for Prosperity is a good expert, too. He is not a scientist but as a former state air director, he understands the issue just as well as most scientists and can speak to broader politics and implications extremely well. CWoods@afphq.org – 614-565-9636

3) While the experts above have been addressing questions about the Harvard study directly, I came across a good summary of points for your consideration. Please use as BACKGROUND ONLY.

- **Study Did Not Go Through Any Peer Review –** While COVID-19 underscores that the sharing of scientific information and open data is critical to addressing current and future crises, it is irresponsible to give weight to these findings prior to any peer review process.
- **Study's Design is Flawed** – It claims to be a national study but it the absence of patient-specific data renders all other comparisons and conclusions in the study meaningless.

- Most Americans are well aware that age and pre-existing health conditions such as hypertension, obesity, heart disease, and asthma are major risk factors for COVID-19. Amazingly, the study does not even acknowledge these patient-specific factors, much less attempt to take them into account. This can lead to enormous distortions in data, especially given that the study includes data from counties with sample sizes as low as 10 cases.

- The study attempts to control for variables like population density, poverty, income, number of hospital beds in the county and age, but only at the county or state level. As a result, their variables have virtually no effect compared against the characteristics of the actual individuals that have tested positive/died from COVID-19. One simply cannot draw any scientific conclusions on COVID-19 risk factors without correcting for other major influencers such as age, co-morbidities and other critical factors like whether someone was hospitalized, for how long, symptoms, use of a ventilator, quality of care.

- The study compares average annual fine particulate matter levels from 2000 to 2016 to deaths from COVID-19 in the last couple months (through April 4, 2020). This ignores years of available data, dramatic trends in fine particulate matter (40% reduction in the U.S. over that period).

- Urban areas tend to have higher air pollution but, even if you control for county-level factors like smoking or average income or age, the study missed numerous other reasons why people in cities may be more likely to be impacted by COVID-19.

- **Study Misses Other Major Factors (This is from EPA data)**

  - In the entire U.S., only 9 full counties and 7 partial counties (out of more than 3,000) do not meet the most recent national standards for fine particulate matter.

  - In the northeast, where the two states with highest death figures as of today are located, fine particulate matter levels have dropped by 47% between 2000 and 2018.

  - Over the period of the study, the U.S. has had far lower fine particulate matter levels than nearly any country.

  - There are only 1,000 fine particulate matter monitoring sites in the country which means that impacted folks may live significant distances from a monitor in their county or state.

  - It is important to note that fine particulate matter is more than just man-made pollution. Mobile sources (cars, planes, trains, lawnmowers) emit just 7% of fine particulate matter in the U.S., less than half of emissions from wildfires or dust in any given year.

4) Inside EPA interview with Cox:

CASAC Chair Cox decries 'bogus' COVID-19 air pollution study
April 28, 2020 - InsideEPA

Tony Cox, chairman of EPA's influential Clean Air Scientific Advisory Committee (CASAC), is attacking as "bogus" a recent Harvard University study linking exposure to elevated levels of air pollution with worsened health outcomes from COVID-19 infection.

Cox made his remarks in an interview published April 27 in the Washington Examiner, which also featured a defense of the study by co-author Francesca Dominici, a senior researcher at the Harvard T.H. Chan School of Public Health. See

https://www.washingtonexaminer.com/policy/energy/bogus-analysis-trump-appointed-epa-advisers-criticize-study-linking-air-pollution-and-coronavirus-death

An avowed skeptic of EPA's risk assessment methodology and of epidemiological studies, Cox has recently led the CASAC through reviews of federal air quality standards for particulate matter (PM) and ozone. EPA has issued a proposal to leave the PM standards unchanged, relying on a CASAC majority opinion shaped by Cox for support. The plan overrides advice from EPA staff scientists and former CASAC panelists to tighten standards for fine PM, or PM2.5, which is blamed for many of the adverse health impacts associated with PM.

The Harvard study tied historic exposure to elevated levels of air pollution, and specifically PM2.5, to worsened health outcomes from the current COVID-19 pandemic. It has already been cited by Democratic lawmakers and environmentalists to attack Trump EPA deregulatory air rules. However, the study has not yet been peer-reviewed.

Cox in the April 27 interview said, "To me, this whole thing is a bogus piece of analysis," adding that, "It was rushed out without being properly vetted. It's technically unsound. It has sensational policy implications, none of which are trustworthy. I would have zero confidence in the published results of this study because its interpretation, design, and analysis are fundamentally flawed."

Cox in his tenure as CASAC chair has consistently warned that epidemiological studies on air pollution are too prone to "confounding" by other factors, such as underlying health conditions, weather or other pollutants. He argues for a tougher standard to claim "causation" of health effects, rather than merely "association" with health outcomes.

In the case of worsened COVID-19 outcomes, confounding factors might include higher population density and low socio-economic status in polluted areas, along with reduced access to healthcare, poor diet and high incidence of underlying health conditions, for example. Differentiating the role of air pollution in such a situation is therefore complex. Cox suggests the Harvard paper merely illustrates that "crowding matters" in the spread of COVID-19.

Dominici in her interview with the Examiner defends her findings as consistent with those of other studies around the world, and says that the evidence raises a "red flag" that policymakers should not ignore.

EPA's Science Advisory Board (SAB) has been tasked with conducting a "rapid review" of a series of scientific issues surrounding COVID-19, including a "long-term" need to look into "Can particulate matter in the atmosphere serve as a vehicle for the transmission of SARS-CoV-2" -- the virus that causes COVID-19, according to an EPA "charge document."

The panel will attempt to answer, "Does exposure to air pollutants, including wildland fire smoke or other air pollutants (e.g. ozone, particulate matter, diesel exhaust, pollen) increase the susceptibility to respiratory viruses like SARS-CoV-2? Or exacerbate existing COVID-19 infection?"

SAB will meet by teleconference April 30 to discuss these and other issues related to the disease. Cox is a member of SAB, which is chaired by Texas state toxicologist and frequent critic of EPA Michael Honeycutt.

Related News | Air | COVID-19 |
224007

FRANK MAISANO
Senior Principal
frank.maisano@policyres.com
T: +1.202.828.5864 | F: +1.800.404.3970

POLICY RESOLUTION GROUP | BRACEWELL LLP

2001 M Street NW, Suite 900 | Washington, D.C. | 20036-3310
policyres.com | profile | download v-card

CONFIDENTIALITY STATEMENT
This message is sent by a law firm and may contain information that is privileged or confidential. If you received this transmission in error, please notify the sender by reply e-mail and delete the message and any attachments.

ANDY HARRIS, M.D.
FIRST DISTRICT, MARYLAND

COMMITTEE ON APPROPRIATIONS

SUBCOMMITTEES
AGRICULTURE, RURAL DEVELOPMENT, FOOD AND DRUG ADMINISTRATION
LABOR, HEALTH AND HUMAN SERVICES, EDUCATION

Congress of the United States
House of Representatives
Washington, DC 20515

2334 RAYBURN HOUSE OFFICE BUILDING
WASHINGTON, D.C. 20515
PHONE 202.225.5311

15 EAST CHURCHVILLE ROAD, SUITE 102B
BEL AIR, MARYLAND 21014
PHONE 410.588.5670

100 EAST MAIN STREET, SUITE 702
SALISBURY, MARYLAND 21801
PHONE 443.944.8624

100 OLDE POINT VILLAGE, SUITE 101
CHESTER, MARYLAND 21619
PHONE 410.643.5425

WWW.HARRIS.HOUSE.GOV

May 1, 2020

The Honorable Alex M. Azar II
Secretary
Department of Health and Human Services
200 Independence Avenue, S.W.
Washington, D.C. 20201

The Honorable Andrew Wheeler
Administrator
Environmental Protection Agency
1200 Pennsylvania Avenue, NW
Washington, DC 20460

Dear Secretary Azar and Administrator Wheeler:

I write to request you undertake an assessment of recent claims related to the relationship between fine particulate matter levels ($PM_{2.5}$) and patient mortality due to COVID-19.

On April 4, 2020, the Harvard T.H. Chan School of Public Health released a pre-publication study, which has not been peer reviewed, claiming a causal association between long-term exposure to fine particulate matter and likelihood of dying from COVID-19. Specifically, the study claims that "an increase of only 1 [microgram per cubic meter] in PM2.5 is associated with a 15% increase in the COVID-19 death rate." A lead study author went on to implore the Federal government to consider reallocation of resources based on the study results: "In the short term, Dr. Dominici and other public health experts said the study's finding meant that places like the Central Valley of California, or Cuyahoga County, Ohio, may need to prepare for more severe cases of COVID-19."[1]

The study received immediate and widespread attention in the media and from policymakers. Harvard's landing page for the study links to nearly 40 news stories detailing the findings and their health implications in the U.S. and around the world, and countless more are readily available on the Internet.[2] Then, on April 15, 18 U.S. Senators wrote to EPA, asserting that Harvard's finding of a 15 percent increase in the COVID-19 death rate means that ongoing EPA regulatory reforms could "potentially increase the COVID-19 death toll and hospitalizations, further burdening our healthcare system and drawing resources away from COVID-19 patients."[3] The study was cited by several Democratic members of the House of Representatives in a similar letter the following week, and was incorporated into the Biden 2020 presidential campaign's revised climate change agenda.[4] An April 16 lawsuit by 15 environmental groups attempting to block EPA from providing reporting-related compliance relief to companies relies upon the study, as does a petition by the Sierra Club and

[1] New York Times, April 7, 2020. https://www.nytimes.com/2020/04/07/climate/air-pollution-coronavirus-covid.html
[2] https://projects.iq.harvard.edu/covid-pm/news?page=3
[3] https://www.harris.senate.gov/news/press-releases/harris-colleagues-raise-concern-over-epas-refusal-to-strengthen-air-quality-standards-amid-covid-19
[4] https://joebiden.com/9-key-elements-of-joe-bidens-plan-for-a-clean-energy-revolution/

Colorado Latino Forum calling on Governor Jared Polis to order an immediate halt to construction of a major highway project. Clearly, the widespread media and political attention to the pre-publication findings has the potential to significantly influence public perception and policy outcomes associated with the nation's response to the COVID-19 pandemic.

Meanwhile, during this same period, a number of scientists began to speak out with major concerns with both the study's design and claims. Dr. Tony Cox, Chair of EPA's Clean Air Scientific Advisory Committee, editor of the journal *Risk Analysis*, and Clinical Professor of Biostatistics and Informatics at the University of Colorado Health Sciences Center, stated that "this whole thing is a bogus piece of analysis" and that he "would have zero confidence in the published results of this study because its interpretation, design, and analysis are fundamentally flawed." In a review article titled "Air Pollution, COVID-19, and Death: The Perils of Bypassing Peer Review," well-respected Canadian air pollution epidemiologists concluded that the Harvard findings "grossly overestimate the risks of Covid-19 mortality from air pollution."[5] The scientists alleged that Harvard researchers failed to account for numerous factors that influence COVID transmission and patient outcomes, including varying social distancing policies, the impact of clusters such as those in nursing homes and meat-packing facilities, spatial variations in $PM_{2.5}$ levels across counties, and the timing of the pandemic's spread through geographic regions (i.e. Seattle and New York impacted earlier than other areas of the country).

Finally, and perhaps of greatest concern, on April 24, 2020, the Harvard study authors appear to have modified their original results. Harvard's headline claim that a 1 microgram per cubic meter increase in $PM_{2.5}$ caused a 15 percent higher COVID mortality rate was removed from the study manuscript and replaced with 8 percent--so the alleged causation was reduced approximately in half.[6] While the top of the study page says "updated April 24th," there is no explanation of the changes that were made, and as of May 1, 2020, the study press release (as well as coverage by major newspapers around the world) alleging a 15 percent higher COVID death rate remains uncorrected.[7] While modifying key conclusions of a research manuscript prior to peer review is not uncommon, failing to explicitly disclose the nature of and reasons for such changes, nor update public-facing press release for the study raises serious ethical concerns. These concerns are only exacerbated given that the study attracted pervasive media and political attention, and is being used to push the federal government to modify its policy response to COVID-19.

As agencies responsible for protecting public health and implementing key components of the federal government's response to COVID-19, it is incumbent upon you to accurately communicate the best available scientific understanding of the virus and the factors that may influence patient outcomes, not only to ensure American citizens are not misinformed, but also to enable proper allocation of resources as Congress funds the government's response to the pandemic. In an ideal world, scientific peer review would serve to inform and correct such confusion or misguided policy advice, but the urgent and rapidly evolving nature of the pandemic is ill-served by a months-long journal review process. Accordingly, I request that you and/or your agencies' appropriate advisory bodies undertake a review of the findings of the Harvard study and the current state of understanding regarding the relationship between air quality and COVID-19. We request that you report back to Congress with your conclusions as expeditiously as possible, given potential consideration of legislation to provide additional pandemic response support to states and localities in the coming weeks.

---

[5] https://www.inverse.com/science/air-pollution-covid-19-deaths

[6] Original version: https://web.archive.org/web/20200408070154/https:/projects.iq.harvard.edu/covid-pm; April 30, 2020 version: https://projects.iq.harvard.edu/covid-pm

[7] https://www.hsph.harvard.edu/news/hsph-in-the-news/air-pollution-linked-with-higher-covid-19-death-rates/

Finally, it is important to continue to acknowledge and educate the public on the incredible progress of air quality in the United States. According to EPA, concentrations of fine particulate matter have declined roughly 40 percent since the year 2000.[8] This progress leads the world, and according to the World Health Organization, U.S. citizens have the lowest exposure to $PM_{2.5}$ of nearly any country in the world—less than one-sixth the global average, and dramatically below other major virus-affected countries such as China, Iran, South Korea, Italy, and Germany.[9] We should not rest on these laurels, but we should make sure the American public is better informed on the success and decades of progress made by EPA, state and local governments in cooperation with the business community to make our air clean and safe to breathe.

Thank you for your time and attention to this request.

Sincerely,

Andy Harris, M.D.
Member of Congress

[8] https://www.epa.gov/air-trends/particulate-matter-pm25-trends.
[9] https://www.stateofglobalair.org/data/#/air/plot

Message

From: Myron Ebell [Myron.Ebell@cei.org]
Sent: 3/12/2020 5:47:16 PM
To: Myron Ebell [Myron.Ebell@cei.org]
Subject: Cooler Heads Coalition next meeting 20th April

The Cooler Heads Coalition will hold its next meeting on Monday, 20th April, beginning at 12 noon at CEI, 1310 L Street, N. W., Seventh Floor. This date is of course tentative, given the uncertain duration, extent, and severity of the ongoing viral outbreak. Please e-mail or ring me at (202) 320-6685 with questions or agenda items.

Eleven free market organizations filed a comment on the proposed NEPA regulations. Read my colleague Marlo Lewis's blog post about it at https://cei.org/blog/eleven-free-market-groups-submit-joint-comments-proposed-updated-nepa-regulations. Read the comment at https://cei.org/sites/default/files/Comments20SubmittedbyFreeMarket202020.pdf.

Myron Ebell
Director, Center for Energy and Environment
Competitive Enterprise Institute
1310 L Street, N. W., Seventh Floor
Washington, DC 20005, USA
Tel direct: (202) 331-2256
Tel mobile: (202) 320-6685
E-mail: Myron.Ebell@cei.org
Stop continental drift!

Appointment

From: Segal, Scott [scott.segal@bracewell.com]
Sent: 11/4/2020 9:53:50 PM
To: Gunasekara, Mandy [gunasekara.Mandy@epa.gov]

Subject: Accepted: TSCA Discussion

Start: 11/9/2020 6:00:00 PM
End: 11/9/2020 6:30:00 PM
Show Time As: Busy

Recurrence: (none)

Appointment

From: Burhop, Anna [anna.burhop@bracewell.com]
Sent: 11/4/2020 10:10:14 PM
To: Gunasekara, Mandy [gunasekara.Mandy@epa.gov]

Subject: Accepted: TSCA Discussion

Start: 11/9/2020 6:00:00 PM
End: 11/9/2020 6:30:00 PM
Show Time As: Busy

Recurrence: (none)

Message

From: Paul Bailey [pbailey@americaspower.org]
Sent: 11/5/2020 6:43:19 AM
To: Hyman, Alana [Hyman.Alana@epa.gov]; Vella, Sophia [Vella.Sophia@epa.gov]
CC: Gunasekara, Mandy [gunasekara.Mandy@epa.gov]; Michelle Bloodworth [mbloodworth@americaspower.org]; Dickerson, Aaron [dickerson.aaron@epa.gov]; Jonathan Wossene [jwossene@americaspower.org]
Subject: RE: Request for Administrator to Speak
Attachments: EPA Meeting Request Form - Administrator Wheeler.docx

Form attached. Thanks for your help.
Paul

From: Hyman, Alana <Hyman.Alana@epa.gov>
Sent: Tuesday, November 03, 2020 11:42 AM
To: Paul Bailey <pbailey@americaspower.org>; Vella, Sophia <Vella.Sophia@epa.gov>
Cc: Gunasekara, Mandy <gunasekara.Mandy@epa.gov>; Michelle Bloodworth <mbloodworth@americaspower.org>; Dickerson, Aaron <dickerson.aaron@epa.gov>
Subject: RE: Request for Administrator to Speak

Good Morning,

Thank you for the following email. If you would be so kind to fill out the attached and send it to me at your convenience, I will be able to look further if we can indeed solidify this request, etc.

Thank you and I look forward to hearing back from you.
Alana

Alana Hyman
Executive Assistant/Scheduler to the Administrator
Office of the Administrator
U.S. Environmental Protection Agency

From: Paul Bailey <pbailey@americaspower.org>
Sent: Monday, November 2, 2020 12:26 PM
To: Hyman, Alana <Hyman.Alana@epa.gov>; Vella, Sophia <Vella.Sophia@epa.gov>
Cc: Gunasekara, Mandy <gunasekara.Mandy@epa.gov>; Michelle Bloodworth <mbloodworth@americaspower.org>
Subject: Request for Administrator to Speak

America's Power has its Annual Board meeting scheduled for next Wednesday (November 11). The meeting will be conducted via Zoom. Mandy indicated that the Administrator would likely be available to speak. We have a slot reserved from 11:35 am to noon for him to speak and answer questions. Please forward any forms that need to be filled out, and we'll return them as quickly as we can. Thanks for your help.

Paul Bailey
4601 N. Fairfax Drive, Suite 1050 • Arlington, VA 22203
M: 703.586.2422
pbailey@americaspower.org

ADMINISTRATOR ANDREW WHEELER
MEETING REQUEST FORM
U.S. Environmental Protection Agency

Today's Date:	November 5, 2020
Proposed Meeting Date and Time:	November 11, 2020. The Administrator is invited to speak from 10:35 am to 11:00 am.
Requesting Individual / Affiliation:	Paul Bailey, America's Power
Location of meeting:	Videoconference/Zoom call
Is the Above Date Flexible?	No
Purpose of the Meeting (Please note all specific topics to be discussed with Administrator)	America's Power Board of Directors meeting. There might be questions about the status of certain EPA regulations.
Does the topic of the meeting include any area under litigation? If so, name the litigation.	No
Role of the Administrator:	He will be one of five speakers (but not as part of a panel).
List all attendees and their affiliation:	20-25 Board members are expected to attend. These include electricity generators, coal producers, railroads, and equipment manufacturers.
Requestor(s)' Relationship to EPA:	None. However, several members of America's Power are subject to EPA regulations or are affected by EPA regulations.
Does the organizer/host personally know the Administrator? If so, what is the nature of the relationship and its length?	Yes. Professional relationship for 15 years.

ADMINISTRATOR ANDREW WHEELER
MEETING REQUEST FORM
U.S. Environmental Protection Agency

Has the organizer/host met previously with the Administrator? If so, which dates?	No
Point of Contact:	Paul Bailey 703-586-2422 pbailey@americaspower.org

Please return this completed form to Alana Hyman at [HYPERLINK "mailto:hyman.alana@epa.gov"]

ED_014208_00000076-00002

Message

From: Paul Bailey [pbailey@americaspower.org]
Sent: 11/5/2020 7:02:49 PM
To: Hyman, Alana [Hyman.Alana@epa.gov]
CC: Gunasekara, Mandy [gunasekara.Mandy@epa.gov]; Michelle Bloodworth [mbloodworth@americaspower.org]; Vella, Sophia [Vella.Sophia@epa.gov]; Dickerson, Aaron [dickerson.aaron@epa.gov]; Jonathan Wossene [jwossene@americaspower.org]
Subject: Re: Request for Administrator to Speak

Thanks.

Sent from my iPhone

On Nov 5, 2020, at 1:47 PM, Hyman, Alana <Hyman.Alana@epa.gov> wrote:

Good afternoon,

We are in receipt of the paperwork requested. Unfortunately, after review of the schedule, Administrator Wheeler will be unable to participate in America's Power Board meeting. The 11th of November is Veteran's Day Holiday and Administrator Wheeler will not be available to participate.

Thank you again for the request and please consider him again for the future.

Alana Hyman

Alana Hyman
Office of the Administrator
U.S. Environmental Protection Agency
Hyman.Alana@epa.gov

From: Paul Bailey <pbailey@americaspower.org>
Sent: Thursday, November 5, 2020 1:43 AM
To: Hyman, Alana <Hyman.Alana@epa.gov>; Vella, Sophia <Vella.Sophia@epa.gov>
Cc: Gunasekara, Mandy <gunasekara.Mandy@epa.gov>; Michelle Bloodworth <mbloodworth@americaspower.org>; Dickerson, Aaron <dickerson.aaron@epa.gov>; Jonathan Wossene <jwossene@americaspower.org>
Subject: RE: Request for Administrator to Speak

Form attached. Thanks for your help.
Paul

From: Hyman, Alana <Hyman.Alana@epa.gov>
Sent: Tuesday, November 03, 2020 11:42 AM
To: Paul Bailey <pbailey@americaspower.org>; Vella, Sophia <Vella.Sophia@epa.gov>
Cc: Gunasekara, Mandy <gunasekara.Mandy@epa.gov>; Michelle Bloodworth <mbloodworth@americaspower.org>; Dickerson, Aaron <dickerson.aaron@epa.gov>
Subject: RE: Request for Administrator to Speak

Good Morning,

Thank you for the following email. If you would be so kind to fill out the attached and send it to me at your convenience, I will be able to look further if we can indeed solidify this request, etc.

Thank you and I look forward to hearing back from you.
Alana

Alana Hyman
Executive Assistant/Scheduler to the Administrator
Office of the Administrator
U.S. Environmental Protection Agency

From: Paul Bailey <pbailey@americaspower.org>
Sent: Monday, November 2, 2020 12:26 PM
To: Hyman, Alana <Hyman.Alana@epa.gov>; Vella, Sophia <Vella.Sophia@epa.gov>
Cc: Gunasekara, Mandy <gunasekara.Mandy@epa.gov>; Michelle Bloodworth <mbloodworth@americaspower.org>
Subject: Request for Administrator to Speak

America's Power has its Annual Board meeting scheduled for next Wednesday (November 11). The meeting will be conducted via Zoom. Mandy indicated that the Administrator would likely be available to speak. We have a slot reserved from 11:35 am to noon for him to speak and answer questions. Please forward any forms that need to be filled out, and we'll return them as quickly as we can. Thanks for your help.

Paul Bailey
4601 N. Fairfax Drive, Suite 1050 • Arlington, VA 22203
M: 703.586.2422
pbailey@americaspower.org

Message

From: Paul Bailey [pbailey@americaspower.org]
Sent: 11/9/2020 3:35:22 PM
To: Hyman, Alana [Hyman.Alana@epa.gov]
CC: Gunasekara, Mandy [gunasekara.Mandy@epa.gov]; Michelle Bloodworth [mbloodworth@americaspower.org]; Vella, Sophia [Vella.Sophia@epa.gov]; Dickerson, Aaron [dickerson.aaron@epa.gov]; Jonathan Wossene [jwossene@americaspower.org]
Subject: RE: Request for Administrator to Speak

Speaking slot is 10:35-11:00. We'll send Zoom call-in shortly.

From: Hyman, Alana <Hyman.Alana@epa.gov>
Sent: Monday, November 09, 2020 10:33 AM
To: Paul Bailey <pbailey@americaspower.org>
Cc: Gunasekara, Mandy <gunasekara.Mandy@epa.gov>; Michelle Bloodworth <mbloodworth@americaspower.org>; Vella, Sophia <Vella.Sophia@epa.gov>; Dickerson, Aaron <dickerson.aaron@epa.gov>; Jonathan Wossene <jwossene@americaspower.org>
Subject: RE: Request for Administrator to Speak

Yes, was Mandy supposed to speak at 11:35 am? Also, can you send the platform information for the call?

Thank you,

Alana

From: Paul Bailey <pbailey@americaspower.org>
Sent: Monday, November 9, 2020 10:11 AM
To: Hyman, Alana <Hyman.Alana@epa.gov>
Cc: Gunasekara, Mandy <gunasekara.Mandy@epa.gov>; Michelle Bloodworth <mbloodworth@americaspower.org>; Vella, Sophia <Vella.Sophia@epa.gov>; Dickerson, Aaron <dickerson.aaron@epa.gov>; Jonathan Wossene <jwossene@americaspower.org>
Subject: RE: Request for Administrator to Speak

Sure. I assume that he will be speaking rather than Mandy, right?

From: Hyman, Alana <Hyman.Alana@epa.gov>
Sent: Monday, November 09, 2020 10:05 AM
To: Paul Bailey <pbailey@americaspower.org>
Cc: Gunasekara, Mandy <gunasekara.Mandy@epa.gov>; Michelle Bloodworth <mbloodworth@americaspower.org>; Vella, Sophia <Vella.Sophia@epa.gov>; Dickerson, Aaron <dickerson.aaron@epa.gov>; Jonathan Wossene <jwossene@americaspower.org>
Subject: RE: Request for Administrator to Speak

Good Morning Paul,

I am sorry for the last-minute email but as it turns out there has been a change in the schedule for Administrator Wheeler. He is now available to participate in America's Power Board Meeting on Veteran's Day, Wednesday, November 11, 2020.
Is there still an opportunity for him to participate? Please let us know and we can coordinate accordingly.

We look forward to hearing from you,

Alana Hyman

Alana Hyman
Office of the Administrator
U.S. Environmental Protection Agency
Hyman.Alana@epa.gov

From: Paul Bailey <pbailey@americaspower.org>
Sent: Thursday, November 5, 2020 2:03 PM
To: Hyman, Alana <Hyman.Alana@epa.gov>
Cc: Gunasekara, Mandy <gunasekara.Mandy@epa.gov>; Michelle Bloodworth <mbloodworth@americaspower.org>; Vella, Sophia <Vella.Sophia@epa.gov>; Dickerson, Aaron <dickerson.aaron@epa.gov>; Jonathan Wossene <jwossene@americaspower.org>
Subject: Re: Request for Administrator to Speak

Thanks.

Sent from my iPhone

> On Nov 5, 2020, at 1:47 PM, Hyman, Alana <Hyman.Alana@epa.gov> wrote:
>
> Good afternoon,
>
> We are in receipt of the paperwork requested. Unfortunately, after review of the schedule, Administrator Wheeler will be unable to participate in America's Power Board meeting. The 11th of November is Veteran's Day Holiday and Administrator Wheeler will not be available to participate.
>
> Thank you again for the request and please consider him again for the future.
>
> Alana Hyman
>
> **Alana Hyman**
> Office of the Administrator
> U.S. Environmental Protection Agency
> Hyman.Alana@epa.gov
>
> ---
>
> **From:** Paul Bailey <pbailey@americaspower.org>
> **Sent:** Thursday, November 5, 2020 1:43 AM
> **To:** Hyman, Alana <Hyman.Alana@epa.gov>; Vella, Sophia <Vella.Sophia@epa.gov>
> **Cc:** Gunasekara, Mandy <gunasekara.Mandy@epa.gov>; Michelle Bloodworth <mbloodworth@americaspower.org>; Dickerson, Aaron <dickerson.aaron@epa.gov>; Jonathan Wossene <jwossene@americaspower.org>
> **Subject:** RE: Request for Administrator to Speak
>
> **Form attached. Thanks for your help.**
> **Paul**

From: Hyman, Alana <Hyman.Alana@epa.gov>
Sent: Tuesday, November 03, 2020 11:42 AM
To: Paul Bailey <pbailey@americaspower.org>; Vella, Sophia <Vella.Sophia@epa.gov>
Cc: Gunasekara, Mandy <gunasekara.Mandy@epa.gov>; Michelle Bloodworth <mbloodworth@americaspower.org>; Dickerson, Aaron <dickerson.aaron@epa.gov>
Subject: RE: Request for Administrator to Speak

Good Morning,

Thank you for the following email. If you would be so kind to fill out the attached and send it to me at your convenience, I will be able to look further if we can indeed solidify this request, etc.

Thank you and I look forward to hearing back from you.
Alana

***A*lana Hyman**
Executive Assistant/Scheduler to the Administrator
Office of the Administrator
U.S. Environmental Protection Agency

From: Paul Bailey <pbailey@americaspower.org>
Sent: Monday, November 2, 2020 12:26 PM
To: Hyman, Alana <Hyman.Alana@epa.gov>; Vella, Sophia <Vella.Sophia@epa.gov>
Cc: Gunasekara, Mandy <gunasekara.Mandy@epa.gov>; Michelle Bloodworth <mbloodworth@americaspower.org>
Subject: Request for Administrator to Speak

America's Power has its Annual Board meeting scheduled for next Wednesday (November 11). The meeting will be conducted via Zoom. Mandy indicated that the Administrator would likely be available to speak. We have a slot reserved from 11:35 am to noon for him to speak and answer questions. Please forward any forms that need to be filled out, and we'll return them as quickly as we can. Thanks for your help.

Paul Bailey
4601 N. Fairfax Drive, Suite 1050 • Arlington, VA 22203
M: 703.586.2422
pbailey@americaspower.org

Message

From: Paul Bailey [pbailey@americaspower.org]
Sent: 11/10/2020 2:36:38 PM
To: Hyman, Alana [Hyman.Alana@epa.gov]
CC: Gunasekara, Mandy [gunasekara.Mandy@epa.gov]; Michelle Bloodworth [mbloodworth@americaspower.org]; Vella, Sophia [Vella.Sophia@epa.gov]; Dickerson, Aaron [dickerson.aaron@epa.gov]; Jonathan Wossene [jwossene@americaspower.org]
Subject: RE: Request for Administrator to Speak

Alana –
Below is the information for the call. We have Andrew scheduled to speak **10:35-11:00 am.** Please let us know if you need anything else and thanks for your help
Paul

Join Zoom Meeting

Ex. 6

Meeting ID: Ex. 6

Passcode: Ex. 6

One tap mobile

Ex. 6 US (Chicago)
US (New York)

Dial by your location

Ex. 6 US (Chicago)
US (New York)
Ex. 6 US (Germantown)
Ex. 6 US (Houston)
US (San Jose)
US (San Jose)
Ex. 6 US (Tacoma)

Meeting ID: Ex. 6

Passcode: Ex. 6

Find your local number: Ex. 6

From: Hyman, Alana <Hyman.Alana@epa.gov>
Sent: Monday, November 09, 2020 10:33 AM
To: Paul Bailey <pbailey@americaspower.org>
Cc: Gunasekara, Mandy <gunasekara.Mandy@epa.gov>; Michelle Bloodworth <mbloodworth@americaspower.org>; Vella, Sophia <Vella.Sophia@epa.gov>; Dickerson, Aaron <dickerson.aaron@epa.gov>; Jonathan Wossene <jwossene@americaspower.org>
Subject: RE: Request for Administrator to Speak

Yes, was Mandy supposed to speak at 11:35 am? Also, can you send the platform information for the call?

Thank you,

Alana

From: Paul Bailey <pbailey@americaspower.org>
Sent: Monday, November 9, 2020 10:11 AM
To: Hyman, Alana <Hyman.Alana@epa.gov>
Cc: Gunasekara, Mandy <gunasekara.Mandy@epa.gov>; Michelle Bloodworth <mbloodworth@americaspower.org>; Vella, Sophia <Vella.Sophia@epa.gov>; Dickerson, Aaron <dickerson.aaron@epa.gov>; Jonathan Wossene <jwossene@americaspower.org>
Subject: RE: Request for Administrator to Speak

Sure. I assume that he will be speaking rather than Mandy, right?

From: Hyman, Alana <Hyman.Alana@epa.gov>
Sent: Monday, November 09, 2020 10:05 AM
To: Paul Bailey <pbailey@americaspower.org>
Cc: Gunasekara, Mandy <gunasekara.Mandy@epa.gov>; Michelle Bloodworth <mbloodworth@americaspower.org>; Vella, Sophia <Vella.Sophia@epa.gov>; Dickerson, Aaron <dickerson.aaron@epa.gov>; Jonathan Wossene <jwossene@americaspower.org>
Subject: RE: Request for Administrator to Speak

Good Morning Paul,

I am sorry for the last-minute email but as it turns out there has been a change in the schedule for Administrator Wheeler. He is now available to participate in America's Power Board Meeting on Veteran's Day, Wednesday, November 11, 2020.
Is there still an opportunity for him to participate? Please let us know and we can coordinate accordingly.

We look forward to hearing from you,
Alana Hyman

Alana Hyman
Office of the Administrator
U.S. Environmental Protection Agency
Hyman.Alana@epa.gov

From: Paul Bailey <pbailey@americaspower.org>
Sent: Thursday, November 5, 2020 2:03 PM
To: Hyman, Alana <Hyman.Alana@epa.gov>
Cc: Gunasekara, Mandy <gunasekara.Mandy@epa.gov>; Michelle Bloodworth <mbloodworth@americaspower.org>; Vella, Sophia <Vella.Sophia@epa.gov>; Dickerson, Aaron <dickerson.aaron@epa.gov>; Jonathan Wossene <jwossene@americaspower.org>
Subject: Re: Request for Administrator to Speak

Thanks.

Sent from my iPhone

On Nov 5, 2020, at 1:47 PM, Hyman, Alana <Hyman.Alana@epa.gov> wrote:

Good afternoon,

We are in receipt of the paperwork requested. Unfortunately, after review of the schedule, Administrator Wheeler will be unable to participate in America's Power Board meeting. The 11th of November is Veteran's Day Holiday and Administrator Wheeler will not be available to participate.

Thank you again for the request and please consider him again for the future.

Alana Hyman

Alana Hyman
Office of the Administrator
U.S. Environmental Protection Agency
Hyman.Alana@epa.gov

From: Paul Bailey <pbailey@americaspower.org>
Sent: Thursday, November 5, 2020 1:43 AM
To: Hyman, Alana <Hyman.Alana@epa.gov>; Vella, Sophia <Vella.Sophia@epa.gov>
Cc: Gunasekara, Mandy <gunasekara.Mandy@epa.gov>; Michelle Bloodworth <mbloodworth@americaspower.org>; Dickerson, Aaron <dickerson.aaron@epa.gov>; Jonathan Wossene <jwossene@americaspower.org>
Subject: RE: Request for Administrator to Speak

Form attached. Thanks for your help.
Paul

From: Hyman, Alana <Hyman.Alana@epa.gov>
Sent: Tuesday, November 03, 2020 11:42 AM
To: Paul Bailey <pbailey@americaspower.org>; Vella, Sophia <Vella.Sophia@epa.gov>
Cc: Gunasekara, Mandy <gunasekara.Mandy@epa.gov>; Michelle Bloodworth <mbloodworth@americaspower.org>; Dickerson, Aaron <dickerson.aaron@epa.gov>
Subject: RE: Request for Administrator to Speak

Good Morning,

Thank you for the following email. If you would be so kind to fill out the attached and send it to me at your convenience, I will be able to look further if we can indeed solidify this request, etc.

Thank you and I look forward to hearing back from you.
Alana

Alana Hyman
Executive Assistant/Scheduler to the Administrator
Office of the Administrator
U.S. Environmental Protection Agency

From: Paul Bailey <pbailey@americaspower.org>
Sent: Monday, November 2, 2020 12:26 PM
To: Hyman, Alana <Hyman.Alana@epa.gov>; Vella, Sophia <Vella.Sophia@epa.gov>
Cc: Gunasekara, Mandy <gunasekara.Mandy@epa.gov>; Michelle Bloodworth <mbloodworth@americaspower.org>
Subject: Request for Administrator to Speak

America's Power has its Annual Board meeting scheduled for next Wednesday (November 11). The meeting will be conducted via Zoom. Mandy indicated that the Administrator would likely be available to speak. We have a slot reserved from 11:35 am to noon for him to speak and answer questions. Please forward any forms that need to be filled out, and we'll return them as quickly as we can. Thanks for your help.

Paul Bailey
4601 N. Fairfax Drive, Suite 1050 • Arlington, VA 22203
M: 703.586.2422
pbailey@americaspower.org

Message

From: Smythe Anderson [AndersonS@api.org]
Sent: 3/20/2020 5:11:16 PM
To: Gunasekara, Mandy [gunasekara.Mandy@epa.gov]
CC: Will Hupman [HupmanW@api.org]
Subject: API Letter to White House
Attachments: 2020-03-20 API Letter to President Trump.pdf

Mandy –

Welcome back to EPA. Quite a week to start your new job.

I wanted to flag the attached letter from API CEO Mike Sommers to President Trump related to the COVID-19 pandemic. Of note, it requests a temporary waiver from non-essential compliance obligations at EPA, including seasonal fuel requirements and routine testing and reporting requirements.

Please let me know if you would like to discuss this in greater detail. I can make myself available at your convenience.

Regards,
Smythe

Smythe Anderson
Director | Federal Relations
American Petroleum Institute | 200 Massachusetts Ave NW | Washington, DC 20001

O: 202.682.8040
M: 202.255.5075

AndersonS@api.org

www.api.org

Michael J. Sommers
President & Chief Executive Officer
API
200 Massachusetts Avenue, NW
Suite 1100
Washington, DC 20001-5571
202-682-8500
sommersm@api.org

March 20, 2020

The Honorable Donald J. Trump
President of the United States
The White House
Washington, DC 20500

Dear President Trump:

On behalf of the members of the American Petroleum Institute,[1] I would like to thank you for your leadership in our nation's response to the global crisis arising from COVID-19. The oil and natural gas industry, like other critical infrastructure sectors, is working tirelessly to ensure there is no interruption in our supply chains as a result of this pandemic. We play a critical role in providing affordable and reliable energy to American families and businesses, which is essential to maintain our national security and will drive our economic recovery. We have identified two potential overarching issues we would like to bring to your attention: critical infrastructure designations and temporary relief through non-essential compliance discretion necessitated by the need to follow appropriate guidelines to mitigate this pandemic.

Critical Infrastructure Designations

As a result of the restrictions and guidelines issued by the President of the United States' Coronavirus Task Force, the Centers for Disease Control and Prevention, and potential decisions at the state and local levels, I am writing to request that the Administration and states recognize that API's members provide the necessary fuels that ensure products and services are delivered in a timely fashion around the country. Our supply chain is robust and complex. Ensuring that our entire supply chain is protected from these impacts to the fullest extent possible is of great importance and will enable our industry to continue to provide the fuels that power our communities.

[1] API represents all segments of America's oil and natural gas industry. Its more than 600 members produce, process, and distribute most of the nation's energy. The industry supports 10.9 million U.S. jobs and is backed by a growing grassroots movement of millions of Americans. API was formed in 1919 as a standards-setting organization. In its first 100 years, API has developed more than 700 standards to enhance operational and environmental safety, efficiency and sustainability.

An equal opportunity employer

To achieve this goal, I request that your Administration ensure that state and local governments receive timely guidance on critical infrastructure personnel, including our employees. Such guidance should enable employees who provide critical support to our nation's infrastructure to reach their work locations and continue to provide their essential services. We worked with the Department of Homeland Security, through the Oil and Natural Gas Sector Coordinating Council, to ensure appropriate personnel were included in such guidance. We request your Administration's support in ensuring that this guidance reaches the appropriate state and local officials across the nation so that critical personnel designations are similar across different jurisdictions.

Non-essential Compliance Discretion

We are grateful for the ongoing work of your Administration in providing appropriate guidelines for mitigation of the pandemic. In light of these guidelines, the oil and natural gas industry needs to maintain safe and reliable operations, taking into consideration that there may be limited personnel capacity to manage the full scope of the current regulatory requirements. As such, we will be requesting assistance in temporarily waiving non-essential compliance obligations from the relevant agencies and departments within your Administration and/or their state counterparts, and may include recordkeeping, training or other non-safety critical requirements. In the coming days and as events warrant, we will be providing these government entities with greater specificity regarding this request.

These types of requests could include, but are not limited to, issues such as:

- Department of Transportation
  - Hours of service limitations
  - Nonessential inspections
- Department of the Interior
  - Reporting and auditing requirements
  - Leasing and permitting considerations
  - Nonessential training
- Department of Homeland Security/Department of State
  - Foreign sourced goods
  - Resolution of visa issues

An equal opportunity employer

- Environmental Protection Agency
    - Waivers of seasonal fuel requirements (and relevant associated state waivers)
    - Routine testing and reporting requirements

In closing, the COVID-19 pandemic represents a significant and historic threat to our nation. We thank the Administration for its continued efforts in combating this threat, and we look forward to partnering with you to help ensure that critical fuels are available, so that we as a nation can continue to respond to this crisis. Thank you for consideration of the requests outlined in this letter, and please do not hesitate to have your Administration contact API as we stand ready to assist in any way possible.

Sincerely,

Michael J. Sommers

cc: U.S. Governors

An equal opportunity employer

Message

From: Birsic, Michael J. [mjbirsic@marathonpetroleum.com]
Sent: 11/12/2020 2:50:49 PM
To: Barker, Kendal [Barker.Kendal@epa.gov]; 'baker.kendal@epa.gov' [baker.kendal@epa.gov]
CC: Gunasekara, Mandy [gunasekara.Mandy@epa.gov]; Menefee, Jake E. [jakeemenefee@marathonpetroleum.com]
Subject: RE: [EXTERNAL] RE: Follow Up: Meeting Request

Kendal,

Adding Jake so you have his email. Thank you for getting us on Mandy's calendar.

Mike

From: Barker, Kendal <Barker.Kendal@epa.gov>
Sent: Thursday, November 12, 2020 9:49 AM
To: Birsic, Michael J. <mjbirsic@marathonpetroleum.com>; 'baker.kendal@epa.gov' <baker.kendal@epa.gov>
Cc: Gunasekara, Mandy <gunasekara.Mandy@epa.gov>
Subject: [EXTERNAL] RE: Follow Up: Meeting Request

Good morning Mike,

Apologies for the delay! It looks like the email you send to me was off by one letter, so I never received it.

Today at 4:30 p.m. ET works best with Mandy's schedule. Do you mind providing Jake Menefee's email address here? Once I receive that, I'll send you both a calendar invitation. Thanks in advance.

Best,

Kendal Barker
Special Assistant
U.S. Environmental Protection Agency
1200 Pennsylvania Ave, NW
Washington, D.C. 20004
O: (202) 564-6624
C: (202) 834-6447
barker.kendal@epa.gov

From: Birsic, Michael J. <mjbirsic@marathonpetroleum.com>
Sent: Thursday, November 12, 2020 9:12 AM
To: 'baker.kendal@epa.gov' <baker.kendal@epa.gov>
Cc: Gunasekara, Mandy <gunasekara.Mandy@epa.gov>
Subject: Follow Up: Meeting Request

Kendal,

I hope you are well. I wanted to reach back out in regards to our meeting request with Mandy. Is Mandy available to speak with us at any of these updated times from my previous email in the next couple days:

Today: 4pm-5pm
Friday: 10am-11am; noon-1pm; 2pm-5pm
Monday, November 16: 1pm-2pm; 4-5pm
Tuesday, November 17: 11am-1pm; 3-5pm

Thank you in advanced for your help.

Mike

From: Birsic, Michael J.
Sent: Monday, November 09, 2020 4:37 PM
To: baker.kendal@epa.gov
Subject: Meeting Request

Hi Kendal,

I wanted to reach out for a meeting with Mandy Gunasekara on Thursday or Friday with my boss, Jake Menefee, and I. We are available on the following dates and times:

Thursday: 1pm-2pm; 3:30pm-5:30pm
Friday: 10am-11am; noon-1pm; 2pm-5pm

Thank you in advanced for your assistance in getting this meeting scheduled.

Mike

Michael Birsic
Marathon Petroleum Corporation
1201 F Street, NW, Suite 625
Washington, DC 20004
Direct: 202-442-2459
Cell: 202-213-2548
mjbirsic@marathonpetroleum.com

Appointment

From: Birsic, Michael J. [mjbirsic@marathonpetroleum.com]
Sent: 11/12/2020 2:59:50 PM
To: Gunasekara, Mandy [gunasekara.Mandy@epa.gov]

Subject: Accepted: Call with Marathon Petroleum Corporation

Start: 11/12/2020 9:30:00 PM
End: 11/12/2020 10:00:00 PM
Show Time As: Busy

Recurrence: (none)

Message

From: Bridgeford, Tawny [TBridgeford@nma.org]
Sent: 11/13/2020 8:30:28 PM
To: Barker, Kendal [Barker.Kendal@epa.gov]
CC: Gunasekara, Mandy [gunasekara.Mandy@epa.gov]
Subject: RE: Scheduling Call Next Week

That works! Rich Nolan, NMA's President & CEO (rnolan@nma.org), and Katie Sweeny, NMA's Executive Vice President & General Counsel (ksweeney@nma.org), will also participate in the call.

From: Barker, Kendal <Barker.Kendal@epa.gov>
Sent: Friday, November 13, 2020 2:29 PM
To: Bridgeford, Tawny <TBridgeford@nma.org>
Cc: Gunasekara, Mandy <gunasekara.Mandy@epa.gov>
Subject: Re: Scheduling Call Next Week

Hi Tawny,

Thanks for reaching out. Does Wednesday, November 18 at 1 p.m. EST work for your schedule? If so, I'll send a calendar invite.

If you need more options, I'd be happy to send additional times. Thanks!

Best,
Kendal Barker
Special Assistant
U.S. Environmental Protection Agency
1200 Pennsylvania Ave, NW
Washington, D.C. 20004
O: (202) 564-6624
C: (202) 834-6447
barker.kendal@epa.gov

On Nov 13, 2020, at 2:26 PM, Bridgeford, Tawny <TBridgeford@nma.org> wrote:

Mandy:

The National Mining Association would like to schedule a short call with you next week on the Administrator's priorities for the remainder of the term. Please let me know what dates and times would work for your schedule.

Thanks in advance and have a nice weekend!

Tawny

Tawny Bridgeford
Deputy General Counsel & Vice President, Regulatory Affairs
National Mining Association
101 Constitution Ave. NW, Suite 500 East

National Mining Association

Washington, D.C. 20001
Cell: (202) 731-8339
Work: (202) 463-2629
tbridgeford@nma.org

Appointment

From: Sweeney, Katie [KSweeney@nma.org]
Sent: 11/14/2020 12:13:26 AM
To: Gunasekara, Mandy [gunasekara.Mandy@epa.gov]

Subject: Accepted: Call with National Mining Association

Start: 11/18/2020 6:00:00 PM
End: 11/18/2020 6:30:00 PM
Show Time As: Busy

Recurrence: (none)

Appointment

From: Bridgeford, Tawny [TBridgeford@nma.org]
Sent: 11/13/2020 9:42:29 PM
To: Gunasekara, Mandy [gunasekara.Mandy@epa.gov]

Subject: Accepted: Call with National Mining Association

Start: 11/18/2020 6:00:00 PM
End: 11/18/2020 6:30:00 PM
Show Time As: Busy

Recurrence: (none)

Appointment

From: Nolan, Rich [RNolan@nma.org]
Sent: 11/16/2020 4:19:02 PM
To: Gunasekara, Mandy [gunasekara.Mandy@epa.gov]

Subject: Accepted: Call with National Mining Association

Start: 11/18/2020 6:00:00 PM
End: 11/18/2020 6:30:00 PM
Show Time As: Busy

Recurrence: (none)

Message

From: Michelle Bloodworth [mbloodworth@americaspower.org]
Sent: 11/19/2020 11:06:39 PM
To: Gunasekara, Mandy [gunasekara.Mandy@epa.gov]
CC: Paul Bailey [pbailey@americaspower.org]
Subject: Thank You America's Power

Mandy – would you mind passing this along to the Administrator. Thanks for all your help in coordinating his participation. We look forward to hearing your remarks tomorrow.

AMERICA'S POWER
ACCCE | Reliable • Secure • Resilient • Affordable

Dear Administrator Wheeler:

Thank you very much for addressing the America's Power Board of Directors meeting on Wednesday, November 11. We appreciate your friendship and willingness to speak to our Board. We look forward to continuing to work with you and your staff on a number of issues important to the coal fleet and to our members over the coming weeks. Again, thank you for taking the time out of your busy schedule to speak with our Board. We heard from a number of members who found it to be an engaging and informative discussion.

Sincerely,
Michelle

Michelle Bloodworth
President and CEO
4601 N. Fairfax Drive, Suite 1050 • Arlington, VA 22203
T: 202.459.4803 | M: 202.595.4663
mbloodworth@americaspower.org

AMERICA'S POWER
ACCCE | Reliable • Secure • Resilient • Affordable

Message

From: Myron Ebell [Myron.Ebell@cei.org]
Sent: 11/25/2020 9:19:01 PM
To: Teller, Paul S. EOP/OVP [Ex. 6]; Gunasekara, Mandy [gunasekara.Mandy@epa.gov]; Small, Jeffrey [jeffrey_small@ios.doi.gov]; Dannenfelser, Martin J. EOP/WHO [Ex. 6]
Subject: Open Market: John Kerry, a Tall Climate Envoy

https://cei.org/blog/john-kerry-a-tall-climate-envoy/

John Kerry, a Tall Climate Envoy

- CEI Open Market
- **Myron Ebell** • *11/25/2020*

Putative President-elect Joe Biden announced on Monday that he would appoint John Kerry as his administration's "special presidential climate envoy." The title is misleading: Kerry will not actually be an ambassador, which would require Senate confirmation. Instead, he will be attached to the National Security Council and treated as if he were cabinet-level, but without the bother of Senate hearings and a confirmation vote, which could be a quite painful experience for someone with Kerry's record. Pretending that Kerry will be a member of the cabinet is most appropriate; after all, the "climate crisis" is a pretend issue and international efforts to address it seldom reach even the level of pretense.

Mainstream media were quick to hail the appointment as an indication of Biden's seriousness about getting back into the international climate negotiations scene. The headline for *The New York Times*'s story was typical: "With John Kerry Pick, Biden Selects a Climate Envoy of Stature."

Of stature? While it is true that Kerry served as Secretary of State in the Obama administration from 2013 to 2017 and as Senator from Massachusetts from 1985 to 2013 and was the Democratic Party's presidential nominee in 2004, all of which could indicate stature, I really think what the *Times* was getting at is that Kerry is tall. Kerry's height, plus his deep, sonorous voice, his monumental self-importance, and his famous aloofness give him a certain commanding presence. Otherwise, he's nearly as inconsequential as his long-time Senate colleague Joe Biden (who is also tall). Rather than itemize the numerous lowlights of his long political career (such as the disastrous Iran nuclear deal), let me give just one example that is relevant to Kerry's new job—his total ignorance of climate science.

The fact is that Kerry knows less about climate science than a person of normal diligence could learn on the Internet in an hour. Now, it is fair to note that politicians have to talk about a lot of things that they know nothing about. But Kerry has specialized in climate for decades. He was chairman of the Senate Foreign Relations Committee from 2009 to 2013, which held a number of hearings on climate. According to a *Washington Post* story, Sen. Kerry represented the U.S. at every important U.N. climate conference, including the Rio Earth Summit in 1992 that launched the U.N. Framework Convention on Climate Change (the underlying climate treaty), the 1997 Kyoto meeting that resulted in the Kyoto Protocol, and the 2009 Copenhagen conference that failed to save the planet. And he attended a number of other annual U.N. climate pow-wows. As Secretary of State, Kerry was in charge of the negotiations that resulted in the 2015 Paris climate treaty.

And yet, Kerry not only doesn't know anything about the basics of climate science; what he is sure he knows is wrong. Here is what I wrote in September 2014 about Kerry's understanding of the greenhouse effect—something according to the then-Secretary of State so "simple kids at the earliest age can understand this." I hope he has learned something since then, but….

Secretary of State John Kerry Explains the Greenhouse Effect (*published September 16, 2014*):

One of the disturbing aspects of the global warming debate is that so many of the leading public officials who espouse alarmism know so little about the basics of climate science. I have seen many instances of ignorance over the years and have largely gotten used to it, but I recently happened on an example from Secretary of State John Kerry that astounded me.

Reporters and commentators noted that in his major speech on climate change given in Jakarta on February 16, Secretary Kerry claimed that "climate change can now be considered another weapon of mass destruction, perhaps the world's most fearsome weapon of mass destruction." But reporters and commentators (including me) overlooked an even more remarkable passage in that long speech in which Secretary Kerry explains some "simple" climate science. According to the State Department's web site, here is an excerpt of what Secretary Kerry said about the greenhouse effect in Jakarta on February 16:

"In fact, this is not really a complicated equation. I know sometimes I can remember from when I was in high school and college, some aspects of science or physics can be tough—chemistry. But this is not tough. This is simple. Kids at the earliest age can understand this.

"Try and picture a very thin layer of gases—a quarter-inch, half an inch, somewhere in that vicinity—that's how thick it is. It's in our atmosphere. It's way up there at the edge of the atmosphere. And for millions of years—literally millions of years—we know that layer has acted like a thermal blanket for the planet—trapping the sun's heat and warming the surface of

the Earth to the ideal, life-sustaining temperature. Average temperature of the Earth has been about 57 degrees Fahrenheit, which keeps life going.

"Life itself on Earth exists because of the so-called greenhouse effect. But in modern times, as human beings have emitted gases into the air that come from all the things we do, that blanket has grown thicker and it traps more and more heat beneath it, raising the temperature of the planet. It's called the greenhouse effect because it works exactly like a greenhouse in which you grow a lot of the fruit that you eat here.

"This is what's causing climate change. It's a huge irony that the very same layer of gases that has made life possible on Earth from the beginning now makes possible the greatest threat that the planet has ever seen."

For those who followed former Senator Kerry at committee hearings over the past three decades, his belief that greenhouse gases are "a very thin layer of gases—a quarter-inch, half an inch, somewhere in that vicinity – … way up there at the edge of the atmosphere" is perhaps not surprising. Nonetheless, it is remarkable that Kerry's explanation got by the highly educated State Department officials in charge of vetting the Secretary's prepared remarks.

Later in his speech, Secretary Kerry made the usual sneering remarks about people who don't think that global warming is a crisis: "President… Obama and I believe very deeply that we do not have time for a meeting anywhere of the Flat Earth Society." I suspect that were Secretary Kerry to find the time to attend a meeting of the Flat Earth Society, his presence might lower the level of discourse.

Myron Ebell
Director, Center for Energy and Environment
Competitive Enterprise Institute
Mobile: (202) 320-6685
Stop Continental Drift!

Message

From: Will Hupman [HupmanW@api.org]
Sent: 1/13/2021 7:11:54 PM
To: Wheeler, Andrew [wheeler.andrew@epa.gov]
CC: Ron Chittim [Chittim@api.org]; Frank Macchiarola [MacchiarolaF@api.org]; Gunasekara, Mandy [gunasekara.Mandy@epa.gov]; Idsal, Anne [idsal.anne@epa.gov]
Subject: API on Small Refinery Exemptions
Attachments: API SRE Letter to EPA (1-13-21)(Final-2).pdf

Dear Administrator Wheeler – Please find attached a letter from API regarding small refinery exemptions. Thank you for your consideration of this matter.

Will Hupman

Will Hupman
Director – Federal Affairs
o: 202.682.8396
m: 202.615.7192
e: hupmanw@api.org
American Petroleum Institute

American Petroleum Institute

Ron Chittim
Vice President
API Downstream Policy
202-682-8167
chittim@api.org

January 13, 2021

Via Electronic and U.S. Mail

The Honorable Andrew Wheeler, Administrator
U.S. Environmental Protection Agency
1200 Pennsylvania Avenue, NW
Washington, D.C. 20460

Re: 2019 Small Refinery Exemptions

Dear Administrator Wheeler:

There are reports that EPA plans to grant many small refinery exemptions (SREs) submitted by refiners outside of the United States Court of Appeals for the Tenth Circuit's jurisdiction for the Renewable Fuels Program (RFS) 2019 compliance year. The American Petroleum Institute (API) believes that EPA granting these SREs will create an unlevel playing field, which will only serve to exacerbate the competitive distortions among refineries competing in the same marketplace. Furthermore, wholesale exemptions that attempt to make the RFS program workable for some refiners also serve to punish non-exempt refiners who already face challenging RFS compliance obligations. The ongoing issues with the RFS have been structural from the inception of the program, apply to all regulated parties, and need to be addressed on a nationwide basis.

API supports the January 2020 Tenth Circuit holding in Renewable Fuels Association et al. v EPA as it is consistent with Congress's intent when it enacted the RFS. Further, given that the U.S. Supreme Court recently granted certiorari in that case, we believe EPA, as well as obligated parties, would best be served by allowing the Court to determine the proper path forward on SREs. For these reasons, we implore the Agency to reconsider any immediate plans to grant wholesale 2019 SREs. Thank you for your consideration of this matter.

Respectfully,

R Chittim

ED_014208_00000109-00001

Message

From: Frank Macchiarola [MacchiarolaF@api.org]
Sent: 3/23/2020 8:48:51 PM
To: Bodine, Susan [bodine.susan@epa.gov]; Bolen, Brittany [bolen.brittany@epa.gov]; Gunasekara, Mandy [gunasekara.Mandy@epa.gov]
CC: Bill Koetzle [KoetzleB@api.org]; Howard Feldman [Feldman@api.org]
Subject: API Letter to Administrator Wheeler 3/23/20
Attachments: Letter to Admin Wheeler 3.23.20-final copy.pdf; 3.20.2020 API Letter to President Trump.pdf

Please find attached a letter from API to Administrator Wheeler dated 3/23/20 regarding non-essential compliance discretion and critical infrastructure designations. Also, please find attached a referenced letter from API's Mike Sommers to President Donald J. Trump of 3/20/20. Please let me know if you have any questions. Thank you for your attention to this matter.
Best,
Frank

Frank J. Macchiarola
Senior Vice President
Policy, Economics & Regulatory Affairs
API
200 Massachusetts, NW
Washington, DC 20001
Telephone 202-682-8167
Fax 202-682-8426
Email macchiarolaf@api.org
www.api.org

March 23, 2020

The Honorable Andrew Wheeler, Administrator
US Environmental Protection Agency
1200 Pennsylvania Avenue, N.W.
Washington, DC 20460

Dear Administrator Wheeler:

On behalf of the members of the American Petroleum Institute,[1] I would like to thank you for your efforts at the Environmental Protection Agency to assist in our nation's response to the global crisis arising from the COVID-19 pandemic. The oil and natural gas industry, like other critical infrastructure sectors, is working tirelessly to help ensure there is no interruption in our supply chains as a result of these unprecedented circumstances. We play a critical role in providing affordable and reliable energy, which is essential to maintaining our national security and will help drive our economic recovery. As indicated in a letter dated March 20th from API President and CEO Michael J. Sommers to President Donald J. Trump (attached), there are two potential overarching issues that may affect our industry: critical infrastructure designations and temporary relief through non-essential compliance discretion. The purpose of this letter is to specifically address the issues within your agency's purview associated with non-essential compliance discretion.

Non-essential Compliance Discretion

The oil and natural gas industry remains committed to prioritizing safe and reliable operations, but is taking into consideration that there may be limited personnel capacity

[1] API represents all segments of America's oil and natural gas industry. Its more than 600 members produce, process, and distribute most of the nation's energy. The industry supports 10.9 million U.S. jobs and is backed by a growing grassroots movement of millions of Americans. API was formed in 1919 as a standards-setting organization. In its first 100 years, API has developed more than 700 standards to enhance operational and environmental safety, efficiency and sustainability.

ED_014208_00000113-00001

to manage the full scope of the current regulatory requirements. As such, we are requesting assistance from your agency in temporarily waiving non-essential compliance obligations, and we request coordination with your state agency counterparts as necessary. As indicated in the letter to President Trump, these issues may include recordkeeping, training or other non-safety critical requirements.

Industry is seeking temporary relief through enforcement discretion, waivers or revised compliance timeframes in response to the COVID-19 pandemic. Specifically, industry is asking Federal and State agencies to publicly provide guidance related to performance delays tied to challenges with the pandemic associated with:

- Quarantine/treatment due to employee exposure to COVID-19;
- Measures taken by the industry to avoid COVID-19 transmission and spread;
- Good faith attempts by the industry to comply with national, state or local edicts related to controlling the virus;
- Addressing the risks of continuing to conduct routine agency inspections; and
- Contractor availability and supply chain disruptions related to all of the above.

Individual company requests for relief would be burdensome to file and track and a more holistic approach may be necessary in an unprecedented situation such as the one we are facing. Nonetheless, industry will make efforts to comply with requirements, but obviously the situation may limit some activities.

Additionally, many of the nation's petroleum refineries are parties to one or more state or federal judicial or administrative consent agreements or decrees with the U.S. EPA and/or its state counterparts. These agreements generally include force majeure clauses which require the settling party to notify the government of known or anticipated compliance delays within tight timeframes. Failure to meet the prescribed notification timeframe often voids any enforcement protection the settling party might otherwise have under the agreement. These hurdles become particularly problematic in the current climate of the COVID-19 disease, where delays in meeting settlement

ED_014208_00000113-00002

requirements might occur due to workforce impacts or reductions or other disruptions that are difficult to predict and continue to evolve. They may also be complicated by the daily pronouncement of protection measures suggested or required by national, state and local governments. There may be a need for federal and state officials to work with individual companies as part of their settlement agreements.

Given the considerations associated with the importance of following CDC guidance for public health, the attached list provides detailed examples of issues for which industry is seeking temporary relief through enforcement discretion, waivers or revised compliance timeframes in response to the COVID-19 pandemic.

In closing, the COVID-19 pandemic represents a significant and historic threat to our nation. We thank the Administration for its continued efforts in combating this threat and we thank your agency for its efforts key to this undertaking. We look forward to partnering with you to help ensure that critical fuels are available, so that we as a nation can continue to respond to this crisis. Thank you for consideration of the requests outlined in this letter, and please do not hesitate to contact API as we stand ready to assist in any way possible.

Sincerely,

Frank J. Macchiarola

ED_014208_00000113-00003

Attachment: API Member Company Priority Issues for COVID-19 Response

Industry is seeking temporary relief through enforcement discretion, waivers or revised compliance timeframes in response to the COVID-19 pandemic. Specifically, industry is asking EPA to publicly provide guidance related to performance delays tied to challenges with the pandemic associated with the identified constraints. Given the uncertainty of the severity and duration of this pandemic, the following categories of constraints have been identified:

- Category 1: Administrative constraints while working remotely
- Category 2: Physical constraints with on-site testing/monitoring requirements
- Category 3: Operability of assets

For certain constraints, we have also identified some specific potential solutions in sub-bullets.

Category 1: Administrative challenges while working remotely

EPA and State Agency examples include but are not limited to:

- Wet signatures requirements on permit applications and reports, such as Title V permit applications. Responsible officials may not have ready access to printers or a DocuSign option. Clarity needed on alternatives.
- Temporary relief for notary witnessing of signatures on permits, etc.
- Potential delay to project permits due to closed state agency offices/canceled meetings that may reset the public comment period.
- Deferred permit renewal applications for expiring permits to address revised work schedules/arrangements.
- Potential to miss certifying laboratory equipment unless NIST certified instruments can be purchased and delivered in time.
- Periodic certification and reporting:
    - Deferred filing of periodic reports

ED_014208_00000113-00004

        - Examples include emissions inventory, emissions banking and trading, TRI reports and rule- or permit-required periodic reports.
    - Filing of reports without the normal signatures (where plant manager or formal designee is unavailable).

Category 2: Physical challenges with on-site testing/monitoring/reporting requirements

EPA and State Agency examples include but are not limited to:

- Waivers of seasonal fuels requirements
- Fuels reporting and compliance
    - Request waivers or enforcement discretion for late reports due to access and resource limitations for the following types of reports:
        - Annual gasoline and Renewable Fuel Standard (RFS) reports
        - EMTS Fuels ABT Credit generation and retirement for compliance with gasoline programs
        - EMTS RIN retirements for annual compliance with RFS standards
- Annual gasoline and RFS program attest engagements
- Fugitive Leak Detection and Repair (LDAR)
    - Deferred LDAR monitoring
    - Late repair times
    - Late recheck of LDAR component after monitoring
    - Delayed reporting
    - Inability to address delay of repair during unit shutdowns due to personnel, supply or external resource shortages or disruptions
- Delayed GHG reporting
- Benzene Waste Operations (BWON)
    - Deferred monitoring
    - Late repair times
    - Delayed reporting

- Potential for delayed or missed sampling required for reporting or to demonstrate exemption from control

- NSPS & MACT
  - Regulatory noncompliance due to limited onsite personnel or external resource shortages or disruptions
  - Late reports due to limited onsite personnel or external resource shortages or disruptions
  - Subpart XX tank trucks vapor tightness tests may not be available
  - Lower shipping levels could prevent enough product available to float an internal floating roof tank when refilling, resulting in a compliance issue under GD GACT or NSPS Subpart Kb
- CEMS and stack tests
  - Delayed stack and RATA testing
  - Missed or late CEMS evaluation
  - Unable to repair CEMS due to specialized knowledge vested in personnel
  - Unable to repair CEMS due to parts unavailability
  - Delayed reports from contractors whose employees are quarantined or in remote work arrangements
  - Waive or delay 6-month smoke school recertification due to cancellation of training/testing sessions to avoid unavailability of emissions observers.
- Cooling tower sampling
  - Delayed sampling and analysis
  - Delayed reports from contractors whose employees are quarantined or in remote work arrangements
  - Lack of lab availability
- Fence line monitoring
  - Unable to change sample tubes in a timely manner
  - Disruptions in lab shipments
  - Lab analytical delays

ED_014208_00000113-00006

- Delayed reports from contractors whose employees are quarantined or in remote work arrangements
- Different verifiers for Title V obligations may be unavailable to certify compliance with the requirements
- Extend recurring/refresh deadline for Method 9 (visible emissions) certification.
- Extend deadlines for required visible emission monitoring of permitted facilities.

- Drinking Water Permit testing and reporting requirements
  - Provide flexibility on routine monitoring/sampling/analysis required drinking water permits.
  - Expected delays in laboratory analysis and short hold time for coliform
- Effluent inspections, sampling and reporting (NPDES and SWPPP)
  - Deferred inspections (monthly, quarterly, etc.).
  - Deferred sampling and WET testing.
  - Deferred filing of periodic reports.
  - Late lab turn-around time on sample results.
  - Missed hold-time on samples.
  - Delayed reporting.
  - Delayed annual training.
  - Contractor who typically performs grab samples is temporarily unable to access site pending medical screening.
  - Improper storage temperature.
  - Inability to collect discharge samples within specified time period due to unavailability of personnel.
  - Storm water monitoring and compliance samples within required timeframe (for rain events) may be problematic.
  - Hydrotesting – providing for pre-approval of low-risk discharges and/or a streamlined approval process. This would help prevent holding up construction and field work to get these permits as the current approval processes are likely to slow down with agencies working remotely.

ED_014208_00000113-00007

- Lack of lab availability.
- NPDES/Discharge Permits (EPA/State)
  - Effluent inspections, sampling and reporting.
  - Deferred inspections (monthly, quarterly, etc.).
  - Deferred sampling and WET testing.
  - Deferred filing of periodic reports.
  - Late lab turn-around time on sample results.
  - Missed hold-time on samples.
  - Delayed reporting.
  - Contractor who typically performs daily grab samples is temporarily unable to access site pending medical screening.
  - Improper storage temperature.
- Storm Water Permit Compliance (SWPPP/SWP/Discharge Plans) (EPA/State)
  - Possible disruption of required inspections.
  - Challenges with post storm event inspections due to contractor availability.
  - Sample collection and delayed laboratory analyses.
  - Possible delay of BMP inspections and non-compliance repairs to BMPs due to limited contractor availability.
  - Delayed monitoring/annual reporting requirements
- Soil and/or groundwater remediation
  - Delayed sampling and reporting requirements.
  - Delayed project implementation.
  - Lack of lab availability.
- Tanks
  - Potential for late repairs on failed tank inspections
  - Tank inspections (deadlines and logistical issues)
  - Delayed above or underground tank inspections
- Hazardous waste management
  - Ensure that waste and hazardous waste fall under the definition of essential travel/trade.

- Deferral of movements past time limits, including 3-day satellite accumulation time limit and 90-day accumulation time limit.
- Impacts on speculative accumulation requirements.
- Delayed analytics and delayed waste characterization.
- Delayed reporting of specific RCRA permit or remediation program.
- Manifest management disruptions.
- TSD permit noncompliance due to personnel, supply or external resource shortages or disruptions.
- Deferral of weekly inspections.
- Delay of annual training.
- Potential for missed weekly RCRA inspections due to personnel shortage.
- Temporary EPA ID number request processing.
- Renewal of Hazardous Material Transporter ID numbers (annual; via DOT).
- Delayed/limited analytical laboratory support for profiling.

- SPCC
  - SPCC applicability determinations.
  - Generation of site security diagrams.
  - Secondary containment repairs.
  - Deferral of daily and monthly inspections.
  - Deferral of annual training and drills.
  - API Standard 653 integrity inspections.
- Underground Injection Control (UIC)
  - Overall UIC compliance obligations.
  - Deferred Mechanical Integrity Testing (MITs).
  - Deferred monthly/annual monitoring requirements.
  - Surface Injection Pressure monitoring.
  - Injection fluid sampling & laboratory analyses.
  - Monthly disposal volume reporting.
- Self-audits/disclosures (where applicable)
  - Late notices.
  - Late Disclosures of Violation and other submittals on pending audits.

- Late implementation of corrective actions.
- Emergency response drills and mandatory equipment deployment to demonstrate emergency readiness.
- Past-due regulatory training that can only be done in a face-to-face environment, e.g. Method 9 opacity certification.
- Fees for TSCA risk evaluation
  - Manufacturers of 20 high priority chemicals required to conduct risk evaluation by May 27, 2020. Delays needed to gather information from many sources in short timeframe.
- Chemical testing requirements
  - Laboratory capacity may be affected – could impact TSCA testing requests/requirements.
- Chemical Data Reporting (CDR)
  - EPA extending CDR reporting 2 months; EPA should consider additional extensions from potential delays due to needed EPA training, electronic reporting system functioning, etc.

Category 3: Operability of Assets

The industry is already prioritizing their resources for the continued maintenance of its facilities, which is a business-critical activity. This is necessary to not only provide for the safety of its constrained employee and contractor workforce, but also to continue to produce the fuels that the nation depends upon daily. Operators are continuing to obtain permits for activities that are deemed essential to the safe operation of their facilities.

Temporary relief from the agency requirements outlined in Categories 1 and 2 are not expected to result in a significant impact to human health or the environment. By providing temporary relief from those requirements, operators and suppliers will be able to prioritize their resources on those critical activities to enable the continued production of fuels and products.

ED_014208_00000113-00010

Michael J. Sommers
President & Chief Executive Officer
API
200 Massachusetts Avenue, NW
Suite 1100
Washington, DC 20001-5571
202-682-8500
sommersm@api.org

March 20, 2020

The Honorable Donald J. Trump
President of the United States
The White House
Washington, DC 20500

Dear President Trump:

On behalf of the members of the American Petroleum Institute,[1] I would like to thank you for your leadership in our nation's response to the global crisis arising from COVID-19. The oil and natural gas industry, like other critical infrastructure sectors, is working tirelessly to ensure there is no interruption in our supply chains as a result of this pandemic. We play a critical role in providing affordable and reliable energy to American families and businesses, which is essential to maintain our national security and will drive our economic recovery. We have identified two potential overarching issues we would like to bring to your attention: critical infrastructure designations and temporary relief through non-essential compliance discretion necessitated by the need to follow appropriate guidelines to mitigate this pandemic.

Critical Infrastructure Designations

As a result of the restrictions and guidelines issued by the President of the United States' Coronavirus Task Force, the Centers for Disease Control and Prevention, and potential decisions at the state and local levels, I am writing to request that the Administration and states recognize that API's members provide the necessary fuels that ensure products and services are delivered in a timely fashion around the country. Our supply chain is robust and complex. Ensuring that our entire supply chain is protected from these impacts to the fullest extent possible is of great importance and will enable our industry to continue to provide the fuels that power our communities.

[1] API represents all segments of America's oil and natural gas industry. Its more than 600 members produce, process, and distribute most of the nation's energy. The industry supports 10.9 million U.S. jobs and is backed by a growing grassroots movement of millions of Americans. API was formed in 1919 as a standards-setting organization. In its first 100 years, API has developed more than 700 standards to enhance operational and environmental safety, efficiency and sustainability.

An equal opportunity employer

To achieve this goal, I request that your Administration ensure that state and local governments receive timely guidance on critical infrastructure personnel, including our employees. Such guidance should enable employees who provide critical support to our nation's infrastructure to reach their work locations and continue to provide their essential services. We worked with the Department of Homeland Security, through the Oil and Natural Gas Sector Coordinating Council, to ensure appropriate personnel were included in such guidance. We request your Administration's support in ensuring that this guidance reaches the appropriate state and local officials across the nation so that critical personnel designations are similar across different jurisdictions.

Non-essential Compliance Discretion

We are grateful for the ongoing work of your Administration in providing appropriate guidelines for mitigation of the pandemic. In light of these guidelines, the oil and natural gas industry needs to maintain safe and reliable operations, taking into consideration that there may be limited personnel capacity to manage the full scope of the current regulatory requirements. As such, we will be requesting assistance in temporarily waving non-essential compliance obligations from the relevant agencies and departments within your Administration and/or their state counterparts, and may include recordkeeping, training or other non-safety critical requirements. In the coming days and as events warrant, we will be providing these government entities with greater specificity regarding this request.

These types of requests could include, but are not limited to, issues such as:

- Department of Transportation
  - Hours of service limitations
  - Nonessential inspections
- Department of the Interior
  - Reporting and auditing requirements
  - Leasing and permitting considerations
  - Nonessential training
- Department of Homeland Security/Department of State
  - Foreign sourced goods
  - Resolution of visa issues

- Environmental Protection Agency
    - Waivers of seasonal fuel requirements (and relevant associated state waivers)
    - Routine testing and reporting requirements

In closing, the COVID-19 pandemic represents a significant and historic threat to our nation. We thank the Administration for its continued efforts in combating this threat, and we look forward to partnering with you to help ensure that critical fuels are available, so that we as a nation can continue to respond to this crisis. Thank you for consideration of the requests outlined in this letter, and please do not hesitate to have your Administration contact API as we stand ready to assist in any way possible.

Sincerely,

Michael J. Sommers

cc: U.S. Governors

An equal opportunity employer

Appointment

From: Bill Koetzle [KoetzleB@api.org]
Sent: 3/24/2020 6:49:22 PM
To: Bill Koetzle [KoetzleB@api.org]; Eisenberg, Ross [Ross_Eisenberg@americanchemistry.com]; Rachel Jones [rjones@nam.org]; Derrick Morgan [DMorgan@afpm.org]; Gunasekara, Mandy [gunasekara.Mandy@epa.gov]; Smythe Anderson [AndersonS@api.org]
CC: Willis, Sharnett [Willis.Sharnett@epa.gov]

Subject: Call with Trades
Location: Call

Start: 3/25/2020 8:00:00 PM
End: 3/25/2020 9:00:00 PM
Show Time As: Busy

Recurrence: (none)

Join Skype Meeting

Trouble Joining? Try Skype Web App

Join by phone

Toll number: Ex. 6 (Dial-in Number) English (United States)

Find a local number

Conference ID: Ex. 6

Forgot your dial-in PIN? | Help

Appointment

From: Birsic, Michael J. [mjbirsic@marathonpetroleum.com]
Sent: 4/16/2020 12:21:04 PM
To: Birsic, Michael J. [mjbirsic@marathonpetroleum.com]; Walas, Fred [fawalas@marathonpetroleum.com]; Menefee, Jake E. [jakeemenefee@marathonpetroleum.com]; Gunasekara, Mandy [gunasekara.Mandy@epa.gov]

Subject: EPA-MPC Biointermediates Petition Call
Location: Ex. 6 Passcode: Ex. 6

Start: 4/17/2020 5:30:00 PM
End: 4/17/2020 6:00:00 PM
Show Time As: Tentative

Recurrence: (none)

Join Skype Meeting

Trouble Joining? Try Skype Web App

Join by phone

Toll number: Ex. 6 (Dial-in Number) English (United States)

Find a local number

Conference ID: Ex. 6

Forgot your dial-in PIN? | Help

Appointment

From: Gunasekara, Mandy [gunasekara.Mandy@epa.gov]
Sent: 11/4/2020 9:51:10 PM
To: Segal, Scott [scott.segal@bracewell.com]; Burhop, Anna [anna.burhop@bracewell.com]; 'chris.parinello@valero.com' [chris.parinello@valero.com]

Subject: TSCA Discussion

Start: 11/9/2020 6:00:00 PM
End: 11/9/2020 6:30:00 PM
Show Time As: Busy

Recurrence: (none)

Required Attendees: Segal, Scott; Burhop, Anna; 'chris.parinello@valero.com'

Please dial in at the number below and Mandy will admit you to the meeting room. Dial-in: Ex. 6 Conf ID: Ex. 6

Appointment

From: Gunasekara, Mandy [gunasekara.Mandy@epa.gov]
Sent: 11/12/2020 2:59:18 PM
To: Birsic, Michael J. [mjbirsic@marathonpetroleum.com]; Menefee, Jake E. [jakeemenefee@marathonpetroleum.com]

Subject: Call with Marathon Petroleum Corporation

Start: 11/12/2020 9:30:00 PM
End: 11/12/2020 10:00:00 PM
Show Time As: Busy

Recurrence: (none)

Required Attendees: Birsic, Michael J.; Menefee, Jake E.

Please dial in at the number below and Mandy will admit you to the meeting room. Dial-in: Ex. 6 Conf ID: Ex. 6

Appointment

From: Gunasekara, Mandy [gunasekara.Mandy@epa.gov]
Sent: 11/13/2020 9:10:50 PM
To: tbridgeford@nma.org; rnolan@nma.org; ksweeney@nma.org

Subject: Call with National Mining Association

Start: 11/18/2020 6:00:00 PM
End: 11/18/2020 6:30:00 PM
Show Time As: Busy

Recurrence: (none)

Required Attendees: tbridgeford@nma.org; rnolan@nma.org; ksweeney@nma.org

Please dial in at the number below and Mandy will admit you to the meeting room. Dial-in: Ex. 6
Conf ID: Ex. 6

A brief call to discuss the Administrator's priorities in the coming weeks.

Rich Nolan, NMA's President & CEO
Katie Sweeny, NMA's Executive Vice President & General Counsel
Tawny Bridgeford, Deputy General Counsel & Vice President, Regulatory Affairs

Message

From: Gunasekara, Mandy [/O=EXCHANGELABS/OU=EXCHANGE ADMINISTRATIVE GROUP (FYDIBOHF23SPDLT)/CN=RECIPIENTS/CN=F639EA28AF4C455493939E3129260707-GUNASEKARA,]
Sent: 8/7/2020 5:49:07 PM
To: Eric Byer [ebyer@nacd.com]
CC: Willis, Sharnett [Willis.Sharnett@epa.gov]
Subject: Re: NACD Invite

This works for me.

Sharnett, can you get this in my calendar?

Thanks for the invite and looking forward to it!

Sent from my iPhone

On Aug 7, 2020, at 12:36 PM, Eric Byer <ebyer@nacd.com> wrote:

Mandy,

Per our conversation attached is the invite for our virtual Fly-In in September. Please let me know if this works for you.

Best to Surya and the fam.

Thanks and have a great weekend!

Eric R. Byer
President & CEO

1560 Wilson Blvd., Suite 1100
Arlington, VA 22209
703.527.6223 x 3048 - Main Line
703.527.7747 - Fax
571.482.3048 - Direct
ebyer@nacd.com

<image002.jpg>

<image003.jpg>

<20GunasekaraInvLtr_09-22.pdf>

Message

From: Douglas Leigh [dleigh@nacd.com]
Sent: 9/17/2020 3:18:27 PM
To: Barker, Kendal [Barker.Kendal@epa.gov]
CC: Gunasekara, Mandy [gunasekara.Mandy@epa.gov]
Subject: RE: NACD EVENT LINK: Mandy Gunasekara - Speaker
Attachments: ATT00001.txt; NACD_Virtual_FlyIn_Attendee_Roster_9.17.20.csv

Kendal,

Here's the most recently updated list of event attendees (attached). If we get any late registrations, I'll send an updated one on Monday.

Otherwise, I think we're good to go!

Much appreciated,
Doug

Douglas A. Leigh III
Director, Legislative Affairs
National Association of Chemical Distributors (NACD)

1560 Wilson Blvd., Suite 1100
Arlington, VA 22209
(703) 527-6223 x 3069 – Main Line
(703) 527-7747 - Fax
(571) 482-3069 – Direct
(703) 623-2026 – Cell
dleigh@nacd.com
Linked

From: Barker, Kendal <Barker.Kendal@epa.gov>
Sent: Wednesday, September 16, 2020 9:04 AM
To: Douglas Leigh <dleigh@nacd.com>
Cc: Gunasekara, Mandy <gunasekara.Mandy@epa.gov>
Subject: Re: NACD EVENT LINK: Mandy Gunasekara - Speaker

Hi Doug,

Thank you so much for providing this information. Mandy would love a list of confirmed attendees.

Let me know if you need anything from us ahead of the event!

Best,

Kendal Barker

Special Assistant

U.S. Environmental Protection Agency

1200 Pennsylvania Ave, NW

Washington, D.C. 20004

O: (202) 564-6624

C: (202) 834-6447

barker.kendal@epa.gov

From: Douglas Leigh <dleigh@nacd.com>
Sent: Tuesday, September 15, 2020 5:29 PM
To: Barker, Kendal <Barker.Kendal@epa.gov>
Cc: Gunasekara, Mandy <gunasekara.Mandy@epa.gov>
Subject: NACD EVENT LINK: Mandy Gunasekara - Speaker

Hi Kendal,

I'm reaching out to provide you and Mandy the Zoom call information below for NACD's Virtual Fly-In Discussion next Tuesday, September 22nd from 12:45 – 1:30 PM.

Additionally, please let me know if you all need a list of confirmed attendees or any additional information.

Best,
Doug

Aileen Smith is inviting you to a scheduled Zoom meeting.

Topic: NACD Virtual Fly-In
Time: Sep 22, 2020 11:45 AM Eastern Time (US and Canada)

Join Zoom Meeting
Ex. 6

Meeting ID: Ex. 6
Passcode: Ex. 6
One tap mobile
Ex. 6 US (Germantown)
US (Chicago)

Dial by your location
Ex. 6 US (Germantown)
US (Chicago)
US (New York)
US (Tacoma)
US (Houston)
US (San Jose)
Meeting ID: Ex. 6
Passcode: 299164
Find your local number: Ex. 6

Douglas A. Leigh III
Director, Legislative Affairs
National Association of Chemical Distributors (NACD)

1560 Wilson Blvd., Suite 1100
Arlington, VA 22209
(703) 527-6223 x 3069 – Main Line
(703) 527-7747 - Fax
(571) 482-3069 – Direct
(703) 623-2026 – Cell
dleigh@nacd.com

LinkedIn

Email,Registration Name,Event Name

shalpin@norfoxchem.com,Stephen M. Halpin,"NACD Virtual Fly-In: September 22, 2020"

fern@andeschem.com,Fernando J. Espinosa,"NACD Virtual Fly-In: September 22, 2020"

cjdiamond@astrochemicals.com,"Christopher J. Diamond, Jr.","NACD Virtual Fly-In: September 22, 2020"

kpogue@jensen-souders.com,Katie Pogue,"NACD Virtual Fly-In: September 22, 2020"

barrett_fisher@vanhornmetz.com,Barrett C. Fisher III,"NACD Virtual Fly-In: September 22, 2020"

colie.whitaker@whitakeroil.com,Colie Whitaker,"NACD Virtual Fly-In: September 22, 2020"

mreddish@ravagoamericas.com,Michelle A. Reddish,"NACD Virtual Fly-In: September 22, 2020"

tcorcoran@brenntag.com,Thomas M. Corcoran,"NACD Virtual Fly-In: September 22, 2020"

lmorrisson@norfoxchem.com,Laura Morrisson,"NACD Virtual Fly-In: September 22, 2020"

richard.erstad@hawkinsinc.com,Richard G. Erstad,"NACD Virtual Fly-In: September 22, 2020"

michele.larry@azelisamericas.com,Michele Larry,"NACD Virtual Fly-In: September 22, 2020"

scott@echoexchange.net,Scott Barrows,"NACD Virtual Fly-In: September 22, 2020"

brian.jurcak@univarusa.com,Brian Jurcak,"NACD Virtual Fly-In: September 22, 2020"

vmadore@norfoxchem.com,Vickie Madore,"NACD Virtual Fly-In: September 22, 2020"

khettinga@superioroil.com,Kurt A. Hettinga,"NACD Virtual Fly-In: September 22, 2020"

jhebert@riteks.com,John Hebert,"NACD Virtual Fly-In: September 22, 2020"

mat@brainerdchemical.com,Mathew A. Brainerd,"NACD Virtual Fly-In: September 22, 2020"

jessica@connectionchemical.com,Jessica Fegan,"NACD Virtual Fly-In: September 22, 2020"

dmcmillan@axonu.com,David McMillan,"NACD Virtual Fly-In: September 22, 2020"

jeffs@producerschemical.com,Jeff Szklarek,"NACD Virtual Fly-In: September 22, 2020"

jw.slusser@harcros.com,J. W. Slusser,"NACD Virtual Fly-In: September 22, 2020"

andy.lovenduski@azelisamericas.com,"Andy Lovenduski, CSCP","NACD Virtual Fly-In: September 22, 2020"

mpoleselli@vivioninc.com,Michael Poleselli,"NACD Virtual Fly-In: September 22, 2020"

pdowning@environmentsafety.com,Peter F. Downing,"NACD Virtual Fly-In: September 22, 2020"

eboss@riteks.com,Edward Boss,"NACD Virtual Fly-In: September 22, 2020"

taubry@emcochem.com,Terry Aubry,"NACD Virtual Fly-In: September 22, 2020"

jfisch@chemserv.com,Joe Fischman,"NACD Virtual Fly-In: September 22, 2020"

bhilleary@webbchemical.com,Brad E. Hilleary,"NACD Virtual Fly-In: September 22, 2020"

twillenborg@brenntag.com,Timothy Willenborg,"NACD Virtual Fly-In: September 22, 2020"

tbt@tlcingredients.com,Thomas B. Turriff,"NACD Virtual Fly-In: September 22, 2020"

mfridley@brenntag.com,Matthew Fridley,"NACD Virtual Fly-In: September 22, 2020"

rmoser@brenntag.com,"Robert L. Moser, Jr.","NACD Virtual Fly-In: September 22, 2020"

andin@chemserv.com,Andrea Nagle,"NACD Virtual Fly-In: September 22, 2020"

reppli@columbuschemical.com,Randall J. Eppli,"NACD Virtual Fly-In: September 22, 2020"

craig.lundell@sealandchem.com,Craig M. Lundell,"NACD Virtual Fly-In: September 22, 2020"

danielmbates@valleysolvents.com,Daniel M. Bates,"NACD Virtual Fly-In: September 22, 2020"

craigf@tcrindustries.com,Craig Frial,"NACD Virtual Fly-In: September 22, 2020"

sfenell@salchem.com,Steven M. Fenell,"NACD Virtual Fly-In: September 22, 2020"

jscott@tri-iso.com,Jason Scott,"NACD Virtual Fly-In: September 22, 2020"

joe_royal@hmroyal.com,Joseph E. Royal,"NACD Virtual Fly-In: September 22, 2020"

Message

From: Eric Byer [ebyer@nacd.com]
Sent: 5/4/2020 2:10:31 PM
To: Gunasekara, Mandy [gunasekara.Mandy@epa.gov]
Subject: RE: Assistance on MSGP?
Attachments: ATT00001.txt

Thanks!

From: Gunasekara, Mandy <gunasekara.Mandy@epa.gov>
Sent: Friday, May 1, 2020 7:39 PM
To: Eric Byer <ebyer@nacd.com>
Subject: RE: Assistance on MSGP?

Eric,
Great to hear from you and thank you for reaching out on this. Apologies our folks have been slow to respond. The likely case is some of our water folks are assigned to COVID as a priority. I'll find someone who can follow-up.
I hope you and the family are well!
Best,
Mandy

From: Eric Byer <ebyer@nacd.com>
Sent: Friday, May 1, 2020 12:47 PM
To: Gunasekara, Mandy <gunasekara.Mandy@epa.gov>
Subject: FW: Assistance on MSGP?

Hey there,

Holding up ok? Interesting times we are living in at the moment!

Anyway, not sure if you are aware of this stormwater issue but it appears it could be a large challenge to our members. Not entirely sure why the timing is now during this pandemic mess. Allison on our team has not had much success getting an answer from your folks, namely Emily Halter. Wanted to see if you had any insight on this one or might be able to help us get an answer?

Thanks much. Best to you, Surya and the kids.

Eric R. Byer
President & CEO

1560 Wilson Blvd., Suite 1100
Arlington, VA 22209
703.527.6223 x 3048 – Main Line
703.527.7747 - Fax
571.482.3048 - Direct
ebyer@nacd.com

From: Allison Tuszynski <atuszynski@nacd.com>
Sent: Wednesday, April 29, 2020 10:38 AM
To: Eric Byer <ebyer@nacd.com>
Cc: Jennifer Gibson <jgibson@nacd.com>
Subject: FW: Assistance on MSGP?

See email below to Emily. Here's a few bullet points that cover what I know. Again, this is really confusing and new stuff so this is more or less what is happening.

- Facilities are required to obtain the general permit/have a stormwater plan if they conduct industrial activities uncovered in the outdoors, so any kind of permanent or temporary storage tanks would qualify a facility
- General Stormwater plan requires quarterly benchmark testing of several things including mercury and lead. EPA's cost estimates are not reasonable—they estimate $2100 per facility for the testing. Pete Downing says expect much higher.
- The permit is a tiered system that requires progressively more costly measures. Tier 1 – Have a General Stormwater Plan Tier 2 – Must follow all feasible Stormwater Containment Measures listed in Appendix Q Tier 3 – Must construct stormwater retention basin or something similar to contain the water

Allison

From: Allison Tuszynski <atuszynski@nacd.com>
Date: Monday, April 13, 2020 at 2:16 PM
To: "halter.emily@epa.gov" <halter.emily@epa.gov>
Subject: Assistance on MSGP?

Good afternoon Emily,

I'm hoping you might be able to help me determine if chemical distributors are covered under the proposed 2020 MSGP for industrial stormwater. Our chemical distributor members process, formulate, blend, re-package, warehouse, transport, and market chemical products.

I recently became aware of the proposed permit and I'm struggling to get my arms around if it applies to our members, and if so, which requirements apply to them. Is there a flowchart or a definition easily accessible that can help a company determine if they are covered under this program?

I understand that there is an exemption for no exposure if you have a storm resistant shelter. Can you tell me how this might apply to the routine transportation of chemicals into and out of a storm resistant shelter?

Thank you,

Allison

Allison Tuszynski
Senior Manager, Regulatory Affairs
National Association of Chemical Distributors (NACD)
Twitter: @ATuszynskiNACD LinkedIn: Allison Tuszynski

National Association of
Chemical Distributors
www.nacd.com

1560 Wilson Blvd., Suite 1100
Arlington, VA 22209
(703) 527-6223 - Main Line
(571) 482-3065 - Direct
atuszynski@nacd.com

Message

From: Allison Tuszynski [atuszynski@nacd.com]
Sent: 5/5/2020 8:24:28 PM
To: Forsgren, Lee [Forsgren.Lee@epa.gov]
CC: Mejias, Melissa [mejias.melissa@epa.gov]; Ross, David P [ross.davidp@epa.gov]; Gunasekara, Mandy [gunasekara.Mandy@epa.gov]
Subject: Re: Assistance on MSGP?

Hi Lee,

Eric shared your email with me as I've been looking into the MSGP for NACD. I'd like to speak with you when you have some time.

Melissa,

Is there a time tomorrow that works to speak with Lee?

Many thanks,

Allison

Allison Tuszynski
Senior Manager, Regulatory Affairs
National Association of Chemical Distributors (NACD)

National Association of Chemical Distributors
www.nacd.com

1560 Wilson Blvd., Suite 1100
Arlington, VA 22209
(703) 527-6223 - Main Line
(571) 482-3065 - Direct
atuszynski@nacd.com

From: "Forsgren, Lee" <Forsgren.Lee@epa.gov>
Date: May 4, 2020 at 4:43:15 PM EDT
To: Eric Byer <ebyer@nacd.com>
Cc: "Mejias, Melissa" <mejias.melissa@epa.gov>, "Ross, David P" <ross.davidp@epa.gov>, "Gunasekara, Mandy" <gunasekara.Mandy@epa.gov>
Subject: FW: Assistance on MSGP?

Eric,

Would be happy to talk with you about the MSGP and where we are right now.

Melissa Mejias will reach out to you for a time that works for us to talk.

Regards,
Lee

D. Lee Forsgren
Deputy Assistant Administrator

Office of Water
Environmental Protection Agency
1200 Pennsylvania, Avenue NW
Room 3219B WJC East Building
Washington, DC 20460
202-564-5700

From: Eric Byer <ebyer@nacd.com>
Sent: Friday, May 1, 2020 12:47 PM
To: Gunasekara, Mandy <gunasekara.Mandy@epa.gov>
Subject: FW: Assistance on MSGP?

Hey there,

Holding up ok? Interesting times we are living in at the moment!

Anyway, not sure if you are aware of this stormwater issue but it appears it could be a large challenge to our members. Not entirely sure why the timing is now during this pandemic mess. Allison on our team has not had much success getting an answer from your folks, namely Emily Halter. Wanted to see if you had any insight on this one or might be able to help us get an answer?

Thanks much. Best to you, Surya and the kids.

Eric R. Byer
President & CEO

nacd
National Association of Chemical Distributors

1560 Wilson Blvd., Suite 1100
Arlington, VA 22209
703.527.6223 x 3048 – Main Line
703.527.7747 - Fax
571.482.3048 - Direct
ebyer@nacd.com

LinkedIn

From: Allison Tuszynski <atuszynski@nacd.com>
Sent: Wednesday, April 29, 2020 10:38 AM
To: Eric Byer <ebyer@nacd.com>
Cc: Jennifer Gibson <jgibson@nacd.com>
Subject: FW: Assistance on MSGP?

See email below to Emily. Here's a few bullet points that cover what I know. Again, this is really confusing and new stuff so this is more or less what is happening.

- Facilities are required to obtain the general permit/have a stormwater plan if they conduct industrial activities uncovered in the outdoors, so any kind of permanent or temporary storage tanks would qualify a facility

- General Stormwater plan requires quarterly benchmark testing of several things including mercury and lead. EPA's cost estimates are not reasonable—they estimate $2100 per facility for the testing. Pete Downing says expect much higher.
- The permit is a tiered system that requires progressively more costly measures. Tier 1 – Have a General Stormwater Plan Tier 2 – Must follow all feasible Stormwater Containment Measures listed in Appendix Q Tier 3 – Must construct stormwater retention basin or something similar to contain the water

Allison

From: Allison Tuszynski <atuszynski@nacd.com>
Date: Monday, April 13, 2020 at 2:16 PM
To: "halter.emily@epa.gov" <halter.emily@epa.gov>
Subject: Assistance on MSGP?

Good afternoon Emily,

I'm hoping you might be able to help me determine if chemical distributors are covered under the proposed 2020 MSGP for industrial stormwater. Our chemical distributor members process, formulate, blend, re-package, warehouse, transport, and market chemical products.

I recently became aware of the proposed permit and I'm struggling to get my arms around if it applies to our members, and if so, which requirements apply to them. Is there a flowchart or a definition easily accessible that can help a company determine if they are covered under this program?

I understand that there is an exemption for no exposure if you have a storm resistant shelter. Can you tell me how this might apply to the routine transportation of chemicals into and out of a storm resistant shelter?

Thank you,

Allison

Allison Tuszynski
Senior Manager, Regulatory Affairs
National Association of Chemical Distributors (NACD)
Twitter: @ATuszynskiNACD LinkedIn: Allison Tuszynski

nacd
National Association of Chemical Distributors
www.nacd.com

1560 Wilson Blvd., Suite 1100
Arlington, VA 22209
(703) 527-6223 - Main Line
(571) 482-3065 - Direct
atuszynski@nacd.com

Message

From: Eric Byer [ebyer@nacd.com]
Sent: 3/18/2020 7:56:54 PM
To: Gunasekara, Mandy [gunasekara.Mandy@epa.gov]
Subject: FW: Viking Chemical Concern
Attachments: ATT00001.txt

Hey, let me know if you get this. ATF needs to remove the caps off of alcohol limits for sanitizer. In case you are bored and looking for something to do this week sister ☺ Welcome back to the swamp! EB

From: Jenni Jenkins <jjenkins@nacd.com>
Sent: Wednesday, March 18, 2020 10:01 AM
To: Eric Byer <ebyer@nacd.com>; Lucinda Schofer <LSchofer@NACD.com>; Jennifer Gibson <jgibson@nacd.com>
Cc: Roselle Foley <RFoley@NACD.com>
Subject: Viking Chemical Concern

Hi All,

I just got off the phone with Andrew from Viking and, while business is going great for them right now (bleach, peroxide, ethanol channels), they have a customer who has hit their volume limit of alcohol used to make hand sanitizer (limits set by the TTB) and the bureau will not increase the limit at this time. Even the state of Wisconsin where they sell their products, has reached out to TTB with no luck yet. There is demand they are willing to meet but cannot due to the limit in place.

Anything we can do on our end?

Best,
Jenni

Jenni Jenkins
Membership Manager

Join NACD today, ask me how!

1560 Wilson Blvd., Suite 1100
Arlington, VA 22209
(703) 527-6223 x 3067
(703) 527-7747 - Fax
(571) 482-3067 – Direct
jjenkins@nacd.com

Message

From: Eric Byer [ebyer@nacd.com]
Sent: 6/8/2020 1:19:40 PM
To: Gunasekara, Mandy [gunasekara.Mandy@epa.gov]
Subject: FW: NACD Member EPA Settlement

Morning Sunshine!

Hope all is well with the you and fam.

I email to complain! Being up front.

We had a member mess up on RMP recently. It is what it is and they have remedied the problem. But I have to tell you this statement really drives me nuts – "EPA has found that many regulated facilities are not adequately managing the risks that they pose or ensuring the safety of their facilities in a way that is sufficient to protect surrounding communities." Many regulated facilities? You know that our guys bend over backwards to do everything they can to stay compliant or go above and beyond the regs. To issue that kind of blanket statement about the industry is unfair and in many ways misleading.

I know that this is not something you probably even saw before going out but I just wanted to raise.

Off my soap box. Thanks for listening.

Eric

From: Jennifer Gibson <jgibson@nacd.com>
Sent: Monday, June 8, 2020 9:09 AM
To: Eric Byer <ebyer@nacd.com>; Lucinda Schofer <LSchofer@NACD.com>; Mike Lang <mlang@nacd.com>; Caroline Brooks <cbrooks@nacd.com>; Matt Glaser <mglaser@NACD.com>; Allison Tuszynski <atuszynski@nacd.com>; Douglas Leigh <dleigh@nacd.com>; Jack Detiveaux <jdetiveaux@nacd.com>; Erin Getz <egetz@nacd.com>; Matthew McKinney <mmckinney@nacd.com>
Subject: NACD Member EPA Settlement

All,

FYI – Hydrite has settled with EPA for an alleged RMP violation – https://www.epa.gov/newsreleases/epa-reaches-settlement-hydrite-chemical-co-alleged-clean-air-act-violations-waterloo.

Jennifer

Message

From: Eric Byer [ebyer@nacd.com]
Sent: 7/23/2020 3:26:20 PM
To: Hyman, Alana [Hyman.Alana@epa.gov]
CC: Gunasekara, Mandy [gunasekara.Mandy@epa.gov]
Subject: NACD Invite to Administrator Wheeler
Attachments: ATT00001.txt; 20WheelerInvLtr_0820Final.pdf

Alana,

Attached is an invitation for the Administrator to speak at our upcoming virtual board meeting on August 20th from noon-3pm. We have flexibility within the 3-hour meeting window to have the Administrator speak if he is available.

Please let me know if you have any questions.

Thanks in advance for your consideration.

Eric R. Byer
President & CEO

1560 Wilson Blvd., Suite 1100
Arlington, VA 22209
703.527.6223 x 3048 – Main Line
703.527.7747 - Fax
571.482.3048 - Direct
ebyer@nacd.com

National Association of
Chemical Distributors

Advancing **Stewardship**, Creating **Connections**™

July 23, 2020

The Honorable Andrew Wheeler
Administrator
U.S. Environmental Protection Agency
1200 Pennsylvania Avenue, N.W.
Washington, DC 20460

Dear Administrator Wheeler:

On behalf of the National Association of Chemical Distributors (NACD), I want to invite you to speak to the NACD Board of Directors Thursday, August 20, 2020, during our virtual meeting. The meeting will take place via Zoom from noon to 3:00 p.m. Our board includes chemical distribution company executives from across the country. If your schedule permits, we would welcome your attendance and thoughts on the latest environmental issues involving the chemical industry.

The chemical distribution industry is highly regulated, and U.S. Environmental Protection Agency rules make up a substantial portion of the requirements NACD members must follow. The Toxic Substances Control Act, Clean Air Act Accident Prevention requirements, and the Emergency Planning and Community Right to Know Act are among the EPA regulations that most broadly apply to NACD members.

NACD was established in 1971 and represents chemical distributors and their supply-chain partners. Member companies process, formulate, blend, re-package, warehouse, transport, and market chemical products for more than 750,000 customers. NACD members meet the highest standards in safety and performance through mandatory participation in NACD Responsible Distribution®, NACD's third-party-verified environmental, health, safety, and security program.

The chemical distribution industry that NACD represents is a major economic engine, employing more than 137,000 people and generating $5.14 billion in tax revenue for local communities across the country, all while delivering valuable products to every industry sector.

Thank you in advance for considering our request. If I can provide other assistance in the form of information about the meeting, please feel free to have your staff contact me directly at (703) 863-8818.

Sincerely,

Eric R. Byer
President and CEO

1560 Wilson Blvd., Suite 1100 Arlington, VA 22209 P: 703.527.6223 F: 703.527.7747 nacd.com

Message

From: Eric Byer [ebyer@nacd.com]
Sent: 7/23/2020 4:41:43 PM
To: Dickerson, Aaron [dickerson.aaron@epa.gov]; Molina, Michael [molina.michael@epa.gov]
CC: Gunasekara, Mandy [gunasekara.Mandy@epa.gov]
Subject: FW: NACD Invite to Administrator Wheeler
Attachments: ATT00001.txt; 20WheelerInvLtr_0820Final.pdf

All,

This is an invite I sent into Alana this morning. Got the notice back and figured I would pass along to you both.

Thanks and please let me know if you have any question.

Eric R. Byer
President & CEO

1560 Wilson Blvd., Suite 1100
Arlington, VA 22209
703.527.6223 x 3048 – Main Line
703.527.7747 - Fax
571.482.3048 - Direct
ebyer@nacd.com

From: Hyman, Alana <Hyman.Alana@epa.gov>
Sent: Thursday, July 23, 2020 11:28 AM
To: Eric Byer <ebyer@nacd.com>
Subject: Automatic reply: NACD Invite to Administrator Wheeler

Currently, I'm out of the office. For immediate scheduling assistance, please contact Aaron Dickerson at Dickerson.Aaron@epa.gov and/or Michael Molina at Molina.Michael@epa.gov.

Thank you, have a wonderful day and please stay healthy.

Alana Hyman
Office of the Administrator
U.S. Environmental Protection Agency

Message

From: Eric Byer [ebyer@nacd.com]
Sent: 7/24/2020 2:54:15 PM
To: Dickerson, Aaron [dickerson.aaron@epa.gov]; Molina, Michael [molina.michael@epa.gov]
CC: Gunasekara, Mandy [gunasekara.Mandy@epa.gov]; Hyman, Alana [Hyman.Alana@epa.gov]
Subject: RE: NACD Invite to Administrator Wheeler
Attachments: EPA Event Request Form - Administrator Wheeler -- National Association of Chemical Distributors.docx

Here you go. Sorry for the delay.

Eric R. Byer
President & CEO

National Association of Chemical Distributors

1560 Wilson Blvd., Suite 1100
Arlington, VA 22209
703.527.6223 x 3048 – Main Line
703.527.7747 - Fax
571.482.3048 - Direct
ebyer@nacd.com

LinkedIn

From: Dickerson, Aaron <dickerson.aaron@epa.gov>
Sent: Thursday, July 23, 2020 1:57 PM
To: Eric Byer <ebyer@nacd.com>; Molina, Michael <molina.michael@epa.gov>
Cc: Gunasekara, Mandy <gunasekara.Mandy@epa.gov>; Hyman, Alana <Hyman.Alana@epa.gov>
Subject: RE: NACD Invite to Administrator Wheeler

Thanks Eric. Can you complete the attached speaker request form? We will be in touch as soon as we can.

Aaron Dickerson
Senior Advisor
Office of the Administrator
U.S. EPA

From: Eric Byer <ebyer@nacd.com>
Sent: Thursday, July 23, 2020 12:42 PM
To: Dickerson, Aaron <dickerson.aaron@epa.gov>; Molina, Michael <molina.michael@epa.gov>
Cc: Gunasekara, Mandy <gunasekara.Mandy@epa.gov>
Subject: FW: NACD Invite to Administrator Wheeler

All,

This is an invite I sent into Alana this morning. Got the notice back and figured I would pass along to you both.

Thanks and please let me know if you have any question.

Eric R. Byer
President & CEO

1560 Wilson Blvd., Suite 1100
Arlington, VA 22209
703.527.6223 x 3048 – Main Line
703.527.7747 - Fax
571.482.3048 - Direct
ebyer@nacd.com

From: Hyman, Alana <Hyman.Alana@epa.gov>
Sent: Thursday, July 23, 2020 11:28 AM
To: Eric Byer <ebyer@nacd.com>
Subject: Automatic reply: NACD Invite to Administrator Wheeler

Currently, I'm out of the office. For immediate scheduling assistance, please contact Aaron Dickerson at Dickerson.Aaron@epa.gov and/or Michael Molina at Molina.Michael@epa.gov.

Thank you, have a wonderful day and please stay healthy.

Alana Hyman
Office of the Administrator
U.S. Environmental Protection Agency

ADMINISTRATOR ANDREW WHEELER EVENT REQUEST FORM
U.S. Environmental Protection Agency

Deadline for Acceptance:	*As soon as possible*
Requesting Individual / Affiliation:	*Eric Byer, President & CEO, National Association of Chemical Distributors*
Event Title:	*NACD Summer Board of Directors Meeting*
Event Date:	*August 20, 2020*
Is the Above Date Flexible?	*No*
Event Time & Duration:	*12:00 p.m. – 3:00 p.m. (Eastern)*
Type of Event:	*Zoom Conference Call*
Purpose of the Event:	*Quarterly Board of Directors Meeting*
Role of the Administrator:	*Brief Overview on Issues Importance to the Agency that may affect NACD member companies*
Requested Presentation Topic, if Speaking:	*See above*
Requested Presentation Format:	*Verbal is fine. PowerPoint welcome as well.*
Speech/Presentation Duration:	*15-20 minutes plus 10-15 for Q&A*
Would You Consider a Surrogate?	*No*
Have you requested or are you planning to request anyone else from EPA to speak or attend this event?	*No*
Event Location:	*Virtual -- Zoom*
Event Audience:	*25-30 CEO and Senior Executives from NACD Member Companies*
Event Host(s)/Organizer(s):	*National Association of Chemical Distributors*
Host(s)' Relationship to EPA:	*Trade organization representing companies regulated by EPA*
Does the organizer/host personally know the Administrator? If so, what is the nature of the relationship and its length?	*No*
Has the organizer/host met previously with the Administrator? If so, which dates?	

ADMINISTRATOR ANDREW WHEELER EVENT REQUEST FORM
U.S. Environmental Protection Agency

	Not Administrator Wheeler, but yes with previous administrators
Run of Show/ Agenda:	*Provide full agenda of the event, including events immediately before/following the Administrator's participation.*
Is there a Hold Room Available for the Administrator?	*No*
Open Press/Closed Press?	*Closed*
Dress Code:	*Business Casual*
Microphone / Teleprompter / Room Setup:	*Virtual*
Honorable Guests Attending:	*None*
Notable Federal, State or Local Appointed or Elected officials attending:	*None*
Individual Introducing Administrator:	*Eric Byer, President & CEO, NACD*
Person to contact for media purposes:	*Same as above*
How will you promote this event?	*We will not. Closed board meeting call.*
Is this event held Weekly, Monthly, Annually?	*Quarterly*
Day of Event Point of Contact:	*Eric Byer, President & CEO,* Ex. 6 *-- cell*
Security Contact:	*Same as above*
Suggested Entrance/ Exit to Event Venue:	*Virtual*
Is the host of the event a registered 501(c)(3), (c)(4), a federally registered lobbyist/lobbying organization, or has a 527 Political Action Committee (PAC)?:	*NACD is a 501 C-6*
Will there be a "gift" and/or "award" presented? If so, what is it and the US currency value of the gift?	*No*
Will a meal be provided, if so what is the US currency value?	*No*

Please return this completed form to Alana Hyman at [HYPERLINK "mailto:hyman.alana@epa.gov"].

Message

From: Eric Byer [ebyer@nacd.com]
Sent: 8/11/2020 6:41:32 PM
To: Hyman, Alana [Hyman.Alana@epa.gov]
CC: Dickerson, Aaron [dickerson.aaron@epa.gov]; Gunasekara, Mandy [gunasekara.Mandy@epa.gov]; Molina, Michael [molina.michael@epa.gov]
Subject: Re: NACD Invite to Administrator Wheeler
Attachments: ATT00001.txt

No worries. Thanks.

On Aug 11, 2020, at 2:33 PM, Hyman, Alana <Hyman.Alana@epa.gov> wrote:

Good afternoon,

Thank you for your patience and your request again. Unfortunately due to travel, Administrator Wheeler will be unable to participate on August 20, 2020.

Thank you and please let me know if you have any questions.

***A*lana Hyman**
Executive Assistant/Scheduler to the Administrator
Office of the Administrator
U.S. Environmental Protection Agency

From: Eric Byer <ebyer@nacd.com>
Sent: Friday, July 31, 2020 11:31 AM
To: Dickerson, Aaron <dickerson.aaron@epa.gov>; Molina, Michael <molina.michael@epa.gov>
Cc: Gunasekara, Mandy <gunasekara.Mandy@epa.gov>; Hyman, Alana <Hyman.Alana@epa.gov>
Subject: RE: NACD Invite to Administrator Wheeler

Good Morning—

Just wanted to check back in on our request to see if there was anything to report?

Thanks much for considering.

Eric R. Byer
President & CEO

<image001.jpg>

1560 Wilson Blvd., Suite 1100
Arlington, VA 22209
703.527.6223 x 3048 – Main Line
703.527.7747 - Fax
571.482.3048 - Direct
ebyer@nacd.com

<image002.jpg>

<image003.jpg>

From: Dickerson, Aaron <dickerson.aaron@epa.gov>
Sent: Thursday, July 23, 2020 1:57 PM
To: Eric Byer <ebyer@nacd.com>; Molina, Michael <molina.michael@epa.gov>
Cc: Gunasekara, Mandy <gunasekara.Mandy@epa.gov>; Hyman, Alana <Hyman.Alana@epa.gov>
Subject: RE: NACD Invite to Administrator Wheeler

Thanks Eric. Can you complete the attached speaker request form? We will be in touch as soon as we can.

Aaron Dickerson
Senior Advisor
Office of the Administrator
U.S. EPA

From: Eric Byer <ebyer@nacd.com>
Sent: Thursday, July 23, 2020 12:42 PM
To: Dickerson, Aaron <dickerson.aaron@epa.gov>; Molina, Michael <molina.michael@epa.gov>
Cc: Gunasekara, Mandy <gunasekara.Mandy@epa.gov>
Subject: FW: NACD Invite to Administrator Wheeler

All,

This is an invite I sent into Alana this morning. Got the notice back and figured I would pass along to you both.

Thanks and please let me know if you have any question.

Eric R. Byer
President & CEO

1560 Wilson Blvd., Suite 1100
Arlington, VA 22209
703.527.6223 x 3048 – Main Line
703.527.7747 - Fax
571.482.3048 - Direct
ebyer@nacd.com

<image002.jpg>

<image003.jpg>

From: Hyman, Alana <Hyman.Alana@epa.gov>
Sent: Thursday, July 23, 2020 11:28 AM
To: Eric Byer <ebyer@nacd.com>
Subject: Automatic reply: NACD Invite to Administrator Wheeler

Currently, I'm out of the office. For immediate scheduling assistance, please contact Aaron Dickerson at Dickerson.Aaron@epa.gov and/or Michael Molina at Molina.Michael@epa.gov.

Thank you, have a wonderful day and please stay healthy.

Alana Hyman
Office of the Administrator
U.S. Environmental Protection Agency

Message

From: AFPM President [AFPM_President@afpm.org]
Sent: 3/24/2020 11:49:27 PM
To: Wheeler, Andrew [wheeler.andrew@epa.gov]; Bodine, Susan [bodine.susan@epa.gov]
CC: Gunasekara, Mandy [gunasekara.Mandy@epa.gov]; James.colgary@hq.doe.gov
Subject: FW: Fuel Waiver Request
Attachments: COVID RVP Fuel Waiver Request 03 24 2020.pdf

Importance: High

Dear Administrator Wheeler and Assistant Administrator Bodine,

Attached is an updated letter regarding the request for conventional gasoline RVP/RFG volatility waivers. We apologize for the duplicate e-mails.

Best regards,
Rebbie Riley on behalf of Chet Thompson, President and CEO

Rebbie J. Riley
Executive Assistant

American
Fuel & Petrochemical
Manufacturers
1800 M Street NW
Suite 900 North
Washington, DC 20036
202.457.0480 office
202.844.5465 direct
202.457.0486 fax

rriley@afpm.org
Learn more about AFPM at afpm.org.

CONFIDENTIALITY NOTICE: This electronic message contains information from the American Fuel & Petrochemical Manufacturers that may be confidential or privileged. The information is intended solely for the use of the individual(s) or entity(ies) named above. If you are not the intended recipient, be aware that any disclosure, copying, distribution, or use of the contents of this message is prohibited. If you have received this e-mail in error, please notify us immediately by telephone at (202) 457-0480 or by reply e-mail and permanently delete this e-mail, any attachments, and all copies thereof.

From: AFPM President
Sent: Tuesday, March 24, 2020 6:53 PM
To: 'gunasekara.Mandy@epa.gov' <gunasekara.Mandy@epa.gov>; 'bodine.susan@epa.gov' <bodine.susan@epa.gov>
Cc: 'James.colgary@hq.doe.gov' <James.colgary@hq.doe.gov>
Subject: Fuel Waiver Request
Importance: High

Dear Administrator Wheeler and Assistant Administrator Bodine,

Attached, please find the letter from Chet Thompson, President and CEO, American Fuel & Petrochemical Manufacturers, regarding the request for conventional gasoline RVP/RFG volatility waivers.

Please contact us with any questions.

Best regards,
Rebbie Riley on behalf of Chet Thompson

Rebbie J. Riley

Executive Assistant

American
Fuel & Petrochemical
Manufacturers
1800 M Street NW
Suite 900 North
Washington, DC 20036
202.457.0480 office
202.844.5465 direct
202.457.0486 fax

rriley@afpm.org
Learn more about AFPM at afpm.org.

CONFIDENTIALITY NOTICE: This electronic message contains information from the American Fuel & Petrochemical Manufacturers that may be confidential or privileged. The information is intended solely for the use of the individual(s) or entity(ies) named above. If you are not the intended recipient, be aware that any disclosure, copying, distribution, or use of the contents of this message is prohibited. If you have received this e-mail in error, please notify us immediately by telephone at (202) 457-0480 or by reply e-mail and permanently delete this e-mail, any attachments, and all copies thereof.

Chet M. Thompson
President and CEO

American Fuel & Petrochemical Manufacturers

1800 M Street, NW
Suite 900 North
Washington, DC
20036
202.457.0480 office
202.457.0486 fax
CThompson@afpm.org
afpm.org

March 24, 2020

Andrew Wheeler
Administrator
U.S. Environmental Protection Agency
1200 Pennsylvania Avenue, NW
Washington, DC 20460
Wheeler.andrew@epa.gov

Susan Bodine
Assistant Administrator
U.S. Environmental Protection Agency
Office of Enforcement and Compliance Assurance
Mail Code 2201A, Room 3204 WJC South
1200 Pennsylvania Avenue, NW
Washington, DC 20460
bodine.susan@epa.gov

Re: Request for Conventional Gasoline RVP/RFG Volatility Waivers

Dear Administrator Wheeler and Assistant Administrator Bodine:

The American Fuel & Petrochemical Manufacturers (AFPM) writes to request a narrowly tailored waiver allowing retail operations and terminal operators additional time to transition from winter to summer gasoline. A waiver is necessary to address the "extreme and unusual fuel supply circumstance" that will prevent the distribution of an adequate supply of gasoline to consumers nationwide.

Specifically, we request EPA exercise its authority under Clean Air Act §211(c)(4)(C)(ii) and (iii) to temporarily waive the summertime conventional gasoline RVP and RFG volatility requirements and simultaneously prohibit entities from adding fuel or fuel additives in a manner that inhibits the prompt drawdown of existing inventories of wintertime gasoline.

Unlike events that have led to prior RVP waivers, such as hurricanes or pipeline disruptions, the ability to produce low RVP gasoline has not been compromised. Refiners have already converted their operations and begun producing low RVP BOBs required for summer gasoline. The problem facing the fuel distribution system is the inability to drawdown and convert fuel distribution tankage. This is because COVID-19 has drastically reduced the demand for gasoline and this demand destruction has resulted in the inability to deplete winter RVP gasoline volumes

from terminal storage tanks. This demand destruction and its impact on tankage turnover times were unforeseeable and could not be prevented.

The inability to quickly turnaround gasoline storage tanks in this low demand environment requires EPA to issue the waiver described above. To balance the environmental benefits from the transition to summertime gasoline, additional measures should be considered to facilitate the prompt turnover of terminal and retail tankage.

We look forward to discussing these measures in greater detail. If you have any questions, please don't hesitate to contact me.

Respectfully,

Chet Thompson
President and CEO

cc: Dan Brouillette, Secretary of Energy

Message

From: AFPM President [AFPM_President@afpm.org]
Sent: 3/24/2020 10:52:53 PM
To: Gunasekara, Mandy [gunasekara.Mandy@epa.gov]; Bodine, Susan [bodine.susan@epa.gov]
CC: James.colgary@hq.doe.gov
Subject: Fuel Waiver Request
Attachments: COVID RVP Fuel Waiver Request 03 24 2020.pdf

Importance: High

Dear Administrator Wheeler and Assistant Administrator Bodine,

Attached, please find the letter from Chet Thompson, President and CEO, American Fuel & Petrochemical Manufacturers, regarding the request for conventional gasoline RVP/RFG volatility waivers.

Please contact us with any questions.

Best regards,
Rebbie Riley on behalf of Chet Thompson

Rebbie J. Riley
Executive Assistant

American
Fuel & Petrochemical
Manufacturers
1800 M Street NW
Suite 900 North
Washington, DC 20036
202.457.0480 office
202.844.5465 direct
202.457.0486 fax

rriley@afpm.org
Learn more about AFPM at afpm.org.

CONFIDENTIALITY NOTICE: This electronic message contains information from the American Fuel & Petrochemical Manufacturers that may be confidential or privileged. The information is intended solely for the use of the individual(s) or entity(ies) named above. If you are not the intended recipient, be aware that any disclosure, copying, distribution, or use of the contents of this message is prohibited. If you have received this e-mail in error, please notify us immediately by telephone at (202) 457-0480 or by reply e-mail and permanently delete this e-mail, any attachments, and all copies thereof.

Chet M. Thompson
President and CEO

American Fuel & Petrochemical Manufacturers

1800 M Street, NW
Suite 900 North
Washington, DC
20036
202.457.0480 office
202.457.0486 fax
CThompson@afpm.org
afpm.org

March 24, 2020

Andrew Wheeler
Administrator
U.S. Environmental Protection Agency
1200 Pennsylvania Avenue, NW
Washington, DC 20460
Via gunasekara.Mandy@epa.gov

Assistant Administrator
U.S. Environmental Protection Agency
Office of Enforcement and Compliance Assurance
Mail Code 2201A, Room 3204 WJC South
1200 Pennsylvania Avenue, NW
Washington, DC 20460
bodine.susan@epa.gov

Re: Request for Conventional Gasoline RVP/RFG Volatility Waivers

Dear Administrator Wheeler and Assistant Administrator Bodine:

The American Fuel & Petrochemical Manufacturers (AFPM) writes to request a narrowly tailored waiver allowing retail operations and terminal operators additional time to transition from winter to summer gasoline. A waiver is necessary to address the "extreme and unusual fuel supply circumstance" that will prevent the distribution of an adequate supply of gasoline to consumers nationwide.

Specifically, we request EPA exercise its authority under Clean Air Act §211(c)(4)(C)(ii) and (iii) to temporarily waive the summertime conventional gasoline RVP and RFG volatility requirements and simultaneously prohibit entities from adding fuel or fuel additives in a manner that inhibits the prompt drawdown of existing inventories of wintertime gasoline.

Unlike events that have led to prior RVP waivers, such as hurricanes or pipeline disruptions, the ability to produce low RVP gasoline has not been compromised. Refiners have already converted their operations and begun producing low RVP BOBs required for summer gasoline. The problem facing the fuel distribution system is the inability to drawdown and convert fuel distribution tankage. This is because COVID-19 has drastically reduced the demand for gasoline and this demand destruction has resulted in the inability to deplete winter RVP gasoline volumes

from terminal storage tanks. This demand destruction and its impact on tankage turnover times were unforeseeable and could not be prevented.

The inability to quickly turnaround gasoline storage tanks in this low demand environment requires EPA to issue the waiver described above. To balance the environmental benefits from the transition to summertime gasoline, additional measures should be considered to facilitate the prompt turnover of terminal and retail tankage.

We look forward to discussing these measures in greater detail. If you have any questions, please don't hesitate to contact me.

Respectfully,

Chet Thompson
President and CEO

cc: Dan Brouillette, Secretary of Energy

Message

From: Gunasekara, Mandy [/O=EXCHANGELABS/OU=EXCHANGE ADMINISTRATIVE GROUP (FYDIBOHF23SPDLT)/CN=RECIPIENTS/CN=F639EA28AF4C455493939E3129260707-GUNASEKARA,]
Sent: 3/20/2020 1:34:04 AM
To: jeff.wood@BakerBotts.com [jeff.wood@bakerbotts.com]
CC: Molina, Michael [molina.michael@epa.gov]
Subject: Re: Coronavirus Industry Event - Invitation for the Administrator

Jeff,
Great to hear from you and thank you for the invitation. We will discuss with the scheduling team and be back in touch soon.

Mandy

Sent from my iPhone

On Mar 19, 2020, at 5:56 PM, jeff.wood@BakerBotts.com <jeff.wood@bakerbotts.com> wrote:

Dear Mandy and Mike,

I hope you both are well and staying safe!

On behalf of Baker Botts, I am reaching out to personally invite Administrator Wheeler (or his designee) to participate in an industry webinar/conference call, at a time that might work for his schedule in the next 3-7 days. We would anticipate the event lasting for 30-45 minutes. The purpose of the event is to provide a platform for EPA to update a broad cross-section of the regulated community concerning:

- EPA actions related to coronavirus;
- EPA resources available to the public and regulated community;
- Key EPA personnel coordinating coronavirus-related efforts; and
- EPA's continued efforts to ensure protection of human health and the environment.

This week, our firm held a coronavirus-related webinar and had over 400 register to attend. For an EPA-focused event with the Administrator, we would expect an even larger response. Our plan is to invite a broad cross-section of industry and environmental professionals, as well as the various associations representing the energy, transportation, and manufacturing sectors. As we have done with our similar events (including the Law & Policy Forum that the Administrator graciously spoke at last year), we would also anticipate a brief opportunity for moderated questions from the audience. As these are likely just the early days of an evolving and complex crisis, we would envision this initial discussion as providing a possible platform to educate the public and regulated community as well as serve as another avenue for continuing to help disseminate information going forward.

Thank you for considering this invitation. While we would obviously be delighted for the Administrator to accept this invitation, I know how busy he is, so we would also be very glad for **another senior EPA representative – such as Associate Deputy Administrator Benevento, Chief of Staff Mandy Gunasekara, Assistant Administrator Bodine, or another representative of the Administrator** – to participate in his place.

If this might be of interest to the Administrator's office, I would be glad to talk further at your convenience.

Regardless, from my vantage point outside of government, I'm extremely grateful for what everyone inside the Administration is doing to help tackle this challenge. Please tell everyone there to keep up the great work!

Very best,
Jeff

Jeffrey H. Wood
Partner

Baker Botts L.L.P.
jeff.wood@bakerbotts.com
T +1.202.639.7732
M +1.202.600.1630

700 K Street NW
Washington DC 20001
USA

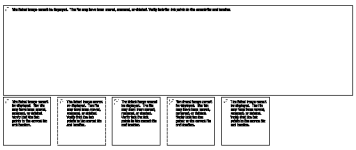

Confidentiality Notice:

The information contained in this email and any attachments is intended only for the recipient[s] listed above and may be privileged and confidential. Any dissemination, copying, or use of or reliance upon such information by or to anyone other than the recipient[s] listed above is prohibited. If you have received this message in error, please notify the sender immediately at the email address above and destroy any and all copies of this message.

Message

From: jeff.wood@BakerBotts.com [jeff.wood@BakerBotts.com]
Sent: 3/23/2020 7:18:18 PM
To: Molina, Michael [molina.michael@epa.gov]
CC: Gunasekara, Mandy [gunasekara.Mandy@epa.gov]; Hyman, Alana [Hyman.Alana@epa.gov]; Lane, Holly [Lane.Holly@epa.gov]; Schiermeyer, Corry [schiermeyer.corry@epa.gov]; McFaul, Jessica [mcfaul.jessica@epa.gov]
Subject: RE: Coronavirus Industry Event - Invitation for the Administrator

Thanks! I'll send a calendar invite for 4pm ET today. Here is the call-in info:

Conference Call Line: Ex. 6
Access Code: Ex. 6

From: Molina, Michael <molina.michael@epa.gov>
Sent: Monday, March 23, 2020 3:13 PM
To: Wood, Jeffrey <jeff.wood@BakerBotts.com>
Cc: Gunasekara, Mandy <gunasekara.Mandy@epa.gov>; Hyman, Alana <Hyman.Alana@epa.gov>; Lane, Holly <Lane.Holly@epa.gov>; Schiermeyer, Corry <schiermeyer.corry@epa.gov>; McFaul, Jessica <mcfaul.jessica@epa.gov>
Subject: Re: Coronavirus Industry Event - Invitation for the Administrator

[EXTERNAL EMAIL]

That would be a great help. Thank you Jeff.

Holly and Jess, can you please join me on the call?

MM

Sent from my iPhone

> On Mar 23, 2020, at 3:12 PM, jeff.wood@BakerBotts.com <jeff.wood@bakerbotts.com> wrote:
>
> Thanks Michael, yes, 4pm today (or any time after) works for me. Would you like me to circulate a call-in #?
>
> ---
>
> **From:** Molina, Michael <molina.michael@epa.gov>
> **Sent:** Monday, March 23, 2020 3:00 PM
> **To:** Wood, Jeffrey <jeff.wood@BakerBotts.com>
> **Cc:** Gunasekara, Mandy <gunasekara.Mandy@epa.gov>; Hyman, Alana <Hyman.Alana@epa.gov>; Lane, Holly <Lane.Holly@epa.gov>; Schiermeyer, Corry <schiermeyer.corry@epa.gov>; McFaul, Jessica <mcfaul.jessica@epa.gov>
> **Subject:** Re: Coronavirus Industry Event - Invitation for the Administrator
>
> **[EXTERNAL EMAIL]**
>
> Hi jeff,

We talked about this this morning. Can you chat this early evening (4:00ish) to go over some of the points you laid out? My initial thought is Wednesday. I have cc'd part of the team that would help on this.

Michael.

(202) 568-1602

Sent from my iPhone

On Mar 19, 2020, at 5:56 PM, jeff.wood@BakerBotts.com <jeff.wood@bakerbotts.com> wrote:

Dear Mandy and Mike,

I hope you both are well and staying safe!

On behalf of Baker Botts, I am reaching out to personally invite Administrator Wheeler (or his designee) to participate in an industry webinar/conference call, at a time that might work for his schedule in the next 3-7 days. We would anticipate the event lasting for 30-45 minutes. The purpose of the event is to provide a platform for EPA to update a broad cross-section of the regulated community concerning:

- EPA actions related to coronavirus;
- EPA resources available to the public and regulated community;
- Key EPA personnel coordinating coronavirus-related efforts; and
- EPA's continued efforts to ensure protection of human health and the environment.

This week, our firm held a coronavirus-related webinar and had over 400 register to attend. For an EPA-focused event with the Administrator, we would expect an even larger response. Our plan is to invite a broad cross-section of industry and environmental professionals, as well as the various associations representing the energy, transportation, and manufacturing sectors. As we have done with our similar events (including the Law & Policy Forum that the Administrator graciously spoke at last year), we would also anticipate a brief opportunity for moderated questions from the audience. As these are likely just the early days of an evolving and complex crisis, we would envision this initial discussion as providing a possible platform to educate the public and regulated community as well as serve as another avenue for continuing to help disseminate information going forward.

Thank you for considering this invitation. While we would obviously be delighted for the Administrator to accept this invitation, I know how busy he is, so we would also be very glad for **another senior EPA representative – such as Associate Deputy Administrator Benevento, Chief of Staff Mandy Gunasekara, Assistant Administrator Bodine, or another representative of the Administrator** – to participate in his place.

If this might be of interest to the Administrator's office, I would be glad to talk further at your convenience.

Regardless, from my vantage point outside of government, I'm extremely grateful for what everyone inside the Administration is doing to help tackle this challenge. Please tell everyone there to keep up the great work!

Very best,
Jeff

Jeffrey H. Wood
Partner

Baker Botts L.L.P.
jeff.wood@bakerbotts.com
T +1.202.639.7732
M +1.202.600.1630

700 K Street NW
Washington DC 20001
USA

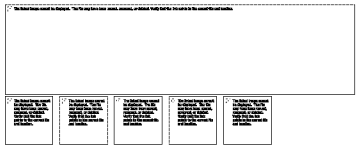

Confidentiality Notice:

The information contained in this email and any attachments is intended only for the recipient[s] listed above and may be privileged and confidential. Any dissemination, copying, or use of or reliance upon such information by or to anyone other than the recipient[s] listed above is prohibited. If you have received this message in error, please notify the sender immediately at the email address above and destroy any and all copies of this message.

Message

From: jeff.wood@BakerBotts.com [jeff.wood@BakerBotts.com]
Sent: 3/24/2020 1:59:01 PM
To: Molina, Michael [molina.michael@epa.gov]
CC: Gunasekara, Mandy [gunasekara.Mandy@epa.gov]; Hyman, Alana [Hyman.Alana@epa.gov]; Lane, Holly [Lane.Holly@epa.gov]; Schiermeyer, Corry [schiermeyer.corry@epa.gov]; McFaul, Jessica [mcfaul.jessica@epa.gov]
Subject: RE: Coronavirus Industry Event - Invitation for the Administrator

315pm ET works great for us. Should we issue the invite now, or await final confirmation? Thank you!

From: Molina, Michael <molina.michael@epa.gov>
Sent: Tuesday, March 24, 2020 9:57 AM
To: Wood, Jeffrey <jeff.wood@BakerBotts.com>
Cc: Gunasekara, Mandy <gunasekara.Mandy@epa.gov>; Hyman, Alana <Hyman.Alana@epa.gov>; Lane, Holly <Lane.Holly@epa.gov>; Schiermeyer, Corry <schiermeyer.corry@epa.gov>; McFaul, Jessica <mcfaul.jessica@epa.gov>
Subject: Re: Coronavirus Industry Event - Invitation for the Administrator

[EXTERNAL EMAIL]

Good morning Jeff.

If we could start at 3:15, that would work best. The Administrator has a 4:00 now.

We can keep 3:30 but I am worried that the talk may bleed over a little. So, if we bumped it up to 3:15, I think that would be optimal.

Michael.

Sent from my iPhone

> On Mar 23, 2020, at 4:30 PM, jeff.wood@BakerBotts.com <jeff.wood@bakerbotts.com> wrote:
>
> Mandy and Michael, thank you again for taking time to talk with our team. We have checked schedules and any time after 330pm ET on Wednesday is optimal, but we definitely defer to you on schedule and can accommodate any time that works for your team. Thank you again. Jeff
>
> **From:** Molina, Michael <molina.michael@epa.gov>
> **Sent:** Monday, March 23, 2020 3:13 PM
> **To:** Wood, Jeffrey <jeff.wood@BakerBotts.com>
> **Cc:** Gunasekara, Mandy <gunasekara.Mandy@epa.gov>; Hyman, Alana <Hyman.Alana@epa.gov>; Lane, Holly <Lane.Holly@epa.gov>; Schiermeyer, Corry <schiermeyer.corry@epa.gov>; McFaul, Jessica <mcfaul.jessica@epa.gov>
> **Subject:** Re: Coronavirus Industry Event - Invitation for the Administrator
>
> **[EXTERNAL EMAIL]**
>
> That would be a great help. Thank you Jeff.

Holly and Jess, can you please join me on the call?

MM

Sent from my iPhone

On Mar 23, 2020, at 3:12 PM, jeff.wood@BakerBotts.com <jeff.wood@bakerbotts.com> wrote:

Thanks Michael, yes, 4pm today (or any time after) works for me. Would you like me to circulate a call-in #?

From: Molina, Michael <molina.michael@epa.gov>
Sent: Monday, March 23, 2020 3:00 PM
To: Wood, Jeffrey <jeff.wood@BakerBotts.com>
Cc: Gunasekara, Mandy <gunasekara.Mandy@epa.gov>; Hyman, Alana <Hyman.Alana@epa.gov>; Lane, Holly <Lane.Holly@epa.gov>; Schiermeyer, Corry <schiermeyer.corry@epa.gov>; McFaul, Jessica <mcfaul.jessica@epa.gov>
Subject: Re: Coronavirus Industry Event - Invitation for the Administrator

[EXTERNAL EMAIL]

Hi jeff,

We talked about this this morning. Can you chat this early evening (4:00ish) to go over some of the points you laid out? My initial thought is Wednesday. I have cc'd part of the team that would help on this.

Michael.

(202) 568-1602

Sent from my iPhone

On Mar 19, 2020, at 5:56 PM, jeff.wood@BakerBotts.com <jeff.wood@bakerbotts.com> wrote:

Dear Mandy and Mike,

I hope you both are well and staying safe!

On behalf of Baker Botts, I am reaching out to personally invite Administrator Wheeler (or his designee) to participate in an industry webinar/conference call, at a time that might work for his schedule in the next 3-7 days. We would anticipate the event lasting for 30-45

minutes. The purpose of the event is to provide a platform for EPA to update a broad cross-section of the regulated community concerning:

- EPA actions related to coronavirus;
- EPA resources available to the public and regulated community;
- Key EPA personnel coordinating coronavirus-related efforts; and
- EPA's continued efforts to ensure protection of human health and the environment.

This week, our firm held a coronavirus-related webinar and had over 400 register to attend. For an EPA-focused event with the Administrator, we would expect an even larger response. Our plan is to invite a broad cross-section of industry and environmental professionals, as well as the various associations representing the energy, transportation, and manufacturing sectors. As we have done with our similar events (including the Law & Policy Forum that the Administrator graciously spoke at last year), we would also anticipate a brief opportunity for moderated questions from the audience. As these are likely just the early days of an evolving and complex crisis, we would envision this initial discussion as providing a possible platform to educate the public and regulated community as well as serve as another avenue for continuing to help disseminate information going forward.

Thank you for considering this invitation. While we would obviously be delighted for the Administrator to accept this invitation, I know how busy he is, so we would also be very glad for **another senior EPA representative – such as Associate Deputy Administrator Benevento, Chief of Staff Mandy Gunasekara, Assistant Administrator Bodine, or another representative of the Administrator** – to participate in his place.

If this might be of interest to the Administrator's office, I would be glad to talk further at your convenience.

Regardless, from my vantage point outside of government, I'm extremely grateful for what everyone inside the Administration is doing to help tackle this challenge. Please tell everyone there to keep up the great work!

Very best,
Jeff

Jeffrey H. Wood
Partner

Baker Botts L.L.P.
jeff.wood@bakerbotts.com
T +1.202.639.7732
M +1.202.600.1630

700 K Street NW
Washington DC 20001
USA

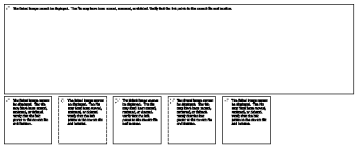

Confidentiality Notice:

The information contained in this email and any attachments is intended only for the recipient[s] listed above and may be privileged and confidential. Any dissemination, copying, or use of or reliance upon such information by or to anyone other than the recipient[s] listed above is prohibited. If you have received this message in error, please notify the sender immediately at the email address above and destroy any and all copies of this message.

Message

From: jeff.wood@BakerBotts.com [jeff.wood@BakerBotts.com]
Sent: 3/20/2020 2:07:12 AM
To: Gunasekara, Mandy [gunasekara.Mandy@epa.gov]
CC: Molina, Michael [molina.michael@epa.gov]
Subject: Re: Coronavirus Industry Event - Invitation for the Administrator

Thank you!

On Mar 19, 2020, at 9:34 PM, Gunasekara, Mandy <gunasekara.Mandy@epa.gov> wrote:

[EXTERNAL EMAIL]

Jeff,
Great to hear from you and thank you for the invitation. We will discuss with the scheduling team and be back in touch soon.

Mandy

Sent from my iPhone

On Mar 19, 2020, at 5:56 PM, jeff.wood@BakerBotts.com <jeff.wood@bakerbotts.com> wrote:

Dear Mandy and Mike,

I hope you both are well and staying safe!

On behalf of Baker Botts, I am reaching out to personally invite Administrator Wheeler (or his designee) to participate in an industry webinar/conference call, at a time that might work for his schedule in the next 3-7 days. We would anticipate the event lasting for 30-45 minutes. The purpose of the event is to provide a platform for EPA to update a broad cross-section of the regulated community concerning:

- EPA actions related to coronavirus;
- EPA resources available to the public and regulated community;
- Key EPA personnel coordinating coronavirus-related efforts; and
- EPA's continued efforts to ensure protection of human health and the environment.

This week, our firm held a coronavirus-related webinar and had over 400 register to attend. For an EPA-focused event with the Administrator, we would expect an even larger response. Our plan is to invite a broad cross-section of industry and environmental professionals, as well as the various associations representing the energy, transportation, and manufacturing sectors. As we have done with our similar events (including the Law & Policy Forum that the Administrator graciously spoke at last year), we would also anticipate a brief opportunity for moderated questions from the

audience. As these are likely just the early days of an evolving and complex crisis, we would envision this initial discussion as providing a possible platform to educate the public and regulated community as well as serve as another avenue for continuing to help disseminate information going forward.

Thank you for considering this invitation. While we would obviously be delighted for the Administrator to accept this invitation, I know how busy he is, so we would also be very glad for **another senior EPA representative – such as Associate Deputy Administrator Benevento, Chief of Staff Mandy Gunasekara, Assistant Administrator Bodine, or another representative of the Administrator** – to participate in his place.

If this might be of interest to the Administrator's office, I would be glad to talk further at your convenience.

Regardless, from my vantage point outside of government, I'm extremely grateful for what everyone inside the Administration is doing to help tackle this challenge. Please tell everyone there to keep up the great work!

Very best,
Jeff

Jeffrey H. Wood
Partner

Baker Botts L.L.P.
jeff.wood@bakerbotts.com
T +1.202.639.7732
M +1.202.600.1630

700 K Street NW
Washington DC 20001
USA

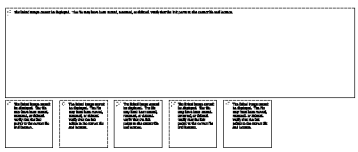

Confidentiality Notice:

The information contained in this email and any attachments is intended only for the recipient[s] listed above and may be privileged and confidential. Any dissemination, copying, or use of or reliance upon such information by or to anyone other than the recipient[s] listed above is prohibited. If you have received this message in error, please notify the sender immediately at the email address above and destroy any and all copies of this message.

Message

From: jeff.wood@BakerBotts.com [jeff.wood@BakerBotts.com]
Sent: 3/24/2020 4:52:25 PM
To: Lane, Holly [Lane.Holly@epa.gov]; Molina, Michael [molina.michael@epa.gov]
CC: Gunasekara, Mandy [gunasekara.Mandy@epa.gov]; Hyman, Alana [Hyman.Alana@epa.gov]; Schiermeyer, Corry [schiermeyer.corry@epa.gov]; McFaul, Jessica [mcfaul.jessica@epa.gov]; wende.arrollado@bakerbotts.com; Kaitlin.Leddy@BakerBotts.com; katie.marshall@BakerBotts.com
Subject: RE: Coronavirus Industry Event - Invitation for the Administrator

Thanks! Yes, we'll send out now and make sure all of you receive the invitation.

From: Lane, Holly <Lane.Holly@epa.gov>
Sent: Tuesday, March 24, 2020 12:50 PM
To: Wood, Jeffrey <jeff.wood@BakerBotts.com>; Molina, Michael <molina.michael@epa.gov>
Cc: Gunasekara, Mandy <gunasekara.Mandy@epa.gov>; Hyman, Alana <Hyman.Alana@epa.gov>; Schiermeyer, Corry <schiermeyer.corry@epa.gov>; McFaul, Jessica <mcfaul.jessica@epa.gov>
Subject: RE: Coronavirus Industry Event - Invitation for the Administrator

[EXTERNAL EMAIL]

I just confirmed with Michael and he is fine with you sending out the invite. Can you include our team in what you send out and the call in information?

Thank you!

Holly Lane
Director of Advance
202-577-6013 Cell
202-564-4753 Office
lane.holly@epa.gov

From: jeff.wood@BakerBotts.com <jeff.wood@BakerBotts.com>
Sent: Tuesday, March 24, 2020 9:59 AM
To: Molina, Michael <molina.michael@epa.gov>
Cc: Gunasekara, Mandy <gunasekara.Mandy@epa.gov>; Hyman, Alana <Hyman.Alana@epa.gov>; Lane, Holly <Lane.Holly@epa.gov>; Schiermeyer, Corry <schiermeyer.corry@epa.gov>; McFaul, Jessica <mcfaul.jessica@epa.gov>
Subject: RE: Coronavirus Industry Event - Invitation for the Administrator

315pm ET works great for us. Should we issue the invite now, or await final confirmation? Thank you!

From: Molina, Michael <molina.michael@epa.gov>
Sent: Tuesday, March 24, 2020 9:57 AM
To: Wood, Jeffrey <jeff.wood@BakerBotts.com>
Cc: Gunasekara, Mandy <gunasekara.Mandy@epa.gov>; Hyman, Alana <Hyman.Alana@epa.gov>; Lane, Holly <Lane.Holly@epa.gov>; Schiermeyer, Corry <schiermeyer.corry@epa.gov>; McFaul, Jessica <mcfaul.jessica@epa.gov>
Subject: Re: Coronavirus Industry Event - Invitation for the Administrator

[EXTERNAL EMAIL]

Good morning Jeff.

If we could start at 3:15, that would work best. The Administrator has a 4:00 now.

We can keep 3:30 but I am worried that the talk may bleed over a little. So, if we bumped it up to 3:15, I think that would be optimal.

Michael.

Sent from my iPhone

> On Mar 23, 2020, at 4:30 PM, jeff.wood@BakerBotts.com <jeff.wood@bakerbotts.com> wrote:
>
> Mandy and Michael, thank you again for taking time to talk with our team. We have checked schedules and any time after 330pm ET on Wednesday is optimal, but we definitely defer to you on schedule and can accommodate any time that works for your team. Thank you again. Jeff
>
> ---
>
> **From:** Molina, Michael <molina.michael@epa.gov>
> **Sent:** Monday, March 23, 2020 3:13 PM
> **To:** Wood, Jeffrey <jeff.wood@BakerBotts.com>
> **Cc:** Gunasekara, Mandy <gunasekara.Mandy@epa.gov>; Hyman, Alana <Hyman.Alana@epa.gov>; Lane, Holly <Lane.Holly@epa.gov>; Schiermeyer, Corry <schiermeyer.corry@epa.gov>; McFaul, Jessica <mcfaul.jessica@epa.gov>
> **Subject:** Re: Coronavirus Industry Event - Invitation for the Administrator
>
> **[EXTERNAL EMAIL]**
>
> That would be a great help. Thank you Jeff.
>
> Holly and Jess, can you please join me on the call?
>
> MM
>
> Sent from my iPhone
>
> > On Mar 23, 2020, at 3:12 PM, jeff.wood@BakerBotts.com <jeff.wood@bakerbotts.com> wrote:
> >
> > Thanks Michael, yes, 4pm today (or any time after) works for me. Would you like me to circulate a call-in #?
> >
> > ---
> >
> > **From:** Molina, Michael <molina.michael@epa.gov>
> > **Sent:** Monday, March 23, 2020 3:00 PM
> > **To:** Wood, Jeffrey <jeff.wood@BakerBotts.com>
> > **Cc:** Gunasekara, Mandy <gunasekara.Mandy@epa.gov>; Hyman, Alana <Hyman.Alana@epa.gov>; Lane, Holly <Lane.Holly@epa.gov>; Schiermeyer, Corry

<schiermeyer.corry@epa.gov>; McFaul, Jessica <mcfaul.jessica@epa.gov>
Subject: Re: Coronavirus Industry Event - Invitation for the Administrator

[EXTERNAL EMAIL]

Hi jeff,

We talked about this this morning. Can you chat this early evening (4:00ish) to go over some of the points you laid out? My initial thought is Wednesday. I have cc'd part of the team that would help on this.

Michael.

(202) 568-1602

Sent from my iPhone

On Mar 19, 2020, at 5:56 PM, jeff.wood@BakerBotts.com <jeff.wood@bakerbotts.com> wrote:

Dear Mandy and Mike,

I hope you both are well and staying safe!

On behalf of Baker Botts, I am reaching out to personally invite Administrator Wheeler (or his designee) to participate in an industry webinar/conference call, at a time that might work for his schedule in the next 3-7 days. We would anticipate the event lasting for 30-45 minutes. The purpose of the event is to provide a platform for EPA to update a broad cross-section of the regulated community concerning:

- EPA actions related to coronavirus;
- EPA resources available to the public and regulated community;
- Key EPA personnel coordinating coronavirus-related efforts; and
- EPA's continued efforts to ensure protection of human health and the environment.

This week, our firm held a coronavirus-related webinar and had over 400 register to attend. For an EPA-focused event with the Administrator, we would expect an even larger response. Our plan is to invite a broad cross-section of industry and environmental professionals, as well as the various associations representing the energy, transportation, and manufacturing sectors. As we have done with our similar events (including the Law & Policy Forum that the Administrator graciously spoke at last year), we would also anticipate a brief opportunity for moderated questions from the audience. As these are likely just the early days of an evolving and complex crisis, we would envision this initial discussion as providing a possible platform to

educate the public and regulated community as well as serve as another avenue for continuing to help disseminate information going forward.

Thank you for considering this invitation. While we would obviously be delighted for the Administrator to accept this invitation, I know how busy he is, so we would also be very glad for **another senior EPA representative – such as Associate Deputy Administrator Benevento, Chief of Staff Mandy Gunasekara, Assistant Administrator Bodine, or another representative of the Administrator** – to participate in his place.

If this might be of interest to the Administrator's office, I would be glad to talk further at your convenience.

Regardless, from my vantage point outside of government, I'm extremely grateful for what everyone inside the Administration is doing to help tackle this challenge. Please tell everyone there to keep up the great work!

Very best,
Jeff

Jeffrey H. Wood
Partner

Baker Botts L.L.P.
jeff.wood@bakerbotts.com
T +1.202.639.7732
M +1.202.600.1630

700 K Street NW
Washington DC 20001
USA

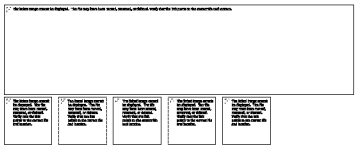

Confidentiality Notice:

The information contained in this email and any attachments is intended only for the recipient[s] listed above and may be privileged and confidential. Any dissemination, copying, or use of or reliance upon such information by or to anyone other than the recipient[s] listed above is prohibited. If you have received this message in error, please notify the sender immediately at the email address above and destroy any and all copies of this message.

Message

From: jeff.wood@BakerBotts.com [jeff.wood@BakerBotts.com]
Sent: 3/24/2020 4:49:01 PM
To: Molina, Michael [molina.michael@epa.gov]
CC: Gunasekara, Mandy [gunasekara.Mandy@epa.gov]; Hyman, Alana [Hyman.Alana@epa.gov]; Lane, Holly [Lane.Holly@epa.gov]; Schiermeyer, Corry [schiermeyer.corry@epa.gov]; McFaul, Jessica [mcfaul.jessica@epa.gov]; wende.arrollado@bakerbotts.com; katie.marshall@BakerBotts.com; Kaitlin.Leddy@BakerBotts.com
Subject: RE: Coronavirus Industry Event - Invitation for the Administrator
Attachments: Teleforum Townhall with EPA Administrator Wheeler on EPA's Response to COVID-19.pdf

Michael, attached is the final draft version of the event invitation (showing a 315pm starting time). Is it okay for us to send out now? Separately, I've cc'd Wende, Katie, and Kaitlin from our Baker Botts team so that we can try to schedule the prep call for tomorrow as well.

Thank you again for your review and assistance. I think this will be very informative for the regulated community and help spread the word about the vital efforts being made by EPA to protect public health and the environment. We really appreciate the opportunity to work with you on this!

Jeff

From: Wood, Jeffrey
Sent: Tuesday, March 24, 2020 9:59 AM
To: 'Molina, Michael' <molina.michael@epa.gov>
Cc: Gunasekara, Mandy <gunasekara.Mandy@epa.gov>; Hyman, Alana <Hyman.Alana@epa.gov>; Lane, Holly <Lane.Holly@epa.gov>; Schiermeyer, Corry <schiermeyer.corry@epa.gov>; McFaul, Jessica <mcfaul.jessica@epa.gov>
Subject: RE: Coronavirus Industry Event - Invitation for the Administrator

315pm ET works great for us. Should we issue the invite now, or await final confirmation? Thank you!

From: Molina, Michael <molina.michael@epa.gov>
Sent: Tuesday, March 24, 2020 9:57 AM
To: Wood, Jeffrey <jeff.wood@BakerBotts.com>
Cc: Gunasekara, Mandy <gunasekara.Mandy@epa.gov>; Hyman, Alana <Hyman.Alana@epa.gov>; Lane, Holly <Lane.Holly@epa.gov>; Schiermeyer, Corry <schiermeyer.corry@epa.gov>; McFaul, Jessica <mcfaul.jessica@epa.gov>
Subject: Re: Coronavirus Industry Event - Invitation for the Administrator

[EXTERNAL EMAIL]

Good morning Jeff.

If we could start at 3:15, that would work best. The Administrator has a 4:00 now.

We can keep 3:30 but I am worried that the talk may bleed over a little. So, if we bumped it up to 3:15, I think that would be optimal.

Michael.

Sent from my iPhone

On Mar 23, 2020, at 4:30 PM, jeff.wood@BakerBotts.com <jeff.wood@bakerbotts.com> wrote:

Mandy and Michael, thank you again for taking time to talk with our team. We have checked schedules and any time after 330pm ET on Wednesday is optimal, but we definitely defer to you on schedule and can accommodate any time that works for your team. Thank you again. Jeff

---

From: Molina, Michael <molina.michael@epa.gov>
Sent: Monday, March 23, 2020 3:13 PM
To: Wood, Jeffrey <jeff.wood@BakerBotts.com>
Cc: Gunasekara, Mandy <gunasekara.Mandy@epa.gov>; Hyman, Alana <Hyman.Alana@epa.gov>; Lane, Holly <Lane.Holly@epa.gov>; Schiermeyer, Corry <schiermeyer.corry@epa.gov>; McFaul, Jessica <mcfaul.jessica@epa.gov>
Subject: Re: Coronavirus Industry Event - Invitation for the Administrator

[EXTERNAL EMAIL]

That would be a great help. Thank you Jeff.

Holly and Jess, can you please join me on the call?

MM

Sent from my iPhone

> On Mar 23, 2020, at 3:12 PM, jeff.wood@BakerBotts.com <jeff.wood@bakerbotts.com> wrote:
>
> Thanks Michael, yes, 4pm today (or any time after) works for me. Would you like me to circulate a call-in #?
>
> ---
>
> **From:** Molina, Michael <molina.michael@epa.gov>
> **Sent:** Monday, March 23, 2020 3:00 PM
> **To:** Wood, Jeffrey <jeff.wood@BakerBotts.com>
> **Cc:** Gunasekara, Mandy <gunasekara.Mandy@epa.gov>; Hyman, Alana <Hyman.Alana@epa.gov>; Lane, Holly <Lane.Holly@epa.gov>; Schiermeyer, Corry <schiermeyer.corry@epa.gov>; McFaul, Jessica <mcfaul.jessica@epa.gov>
> **Subject:** Re: Coronavirus Industry Event - Invitation for the Administrator
>
> **[EXTERNAL EMAIL]**
>
> Hi jeff,
>
> We talked about this this morning. Can you chat this early evening (4:00ish) to go over some of the points you laid out? My initial thought is Wednesday. I have cc'd part of the team that would help on this.
>
> Michael.
>
> (202) 568-1602

Sent from my iPhone

On Mar 19, 2020, at 5:56 PM, jeff.wood@BakerBotts.com <jeff.wood@bakerbotts.com> wrote:

Dear Mandy and Mike,

I hope you both are well and staying safe!

On behalf of Baker Botts, I am reaching out to personally invite Administrator Wheeler (or his designee) to participate in an industry webinar/conference call, at a time that might work for his schedule in the next 3-7 days. We would anticipate the event lasting for 30-45 minutes. The purpose of the event is to provide a platform for EPA to update a broad cross-section of the regulated community concerning:

- EPA actions related to coronavirus;
- EPA resources available to the public and regulated community;
- Key EPA personnel coordinating coronavirus-related efforts; and
- EPA's continued efforts to ensure protection of human health and the environment.

This week, our firm held a coronavirus-related webinar and had over 400 register to attend. For an EPA-focused event with the Administrator, we would expect an even larger response. Our plan is to invite a broad cross-section of industry and environmental professionals, as well as the various associations representing the energy, transportation, and manufacturing sectors. As we have done with our similar events (including the Law & Policy Forum that the Administrator graciously spoke at last year), we would also anticipate a brief opportunity for moderated questions from the audience. As these are likely just the early days of an evolving and complex crisis, we would envision this initial discussion as providing a possible platform to educate the public and regulated community as well as serve as another avenue for continuing to help disseminate information going forward.

Thank you for considering this invitation. While we would obviously be delighted for the Administrator to accept this invitation, I know how busy he is, so we would also be very glad for **another senior EPA representative – such as Associate Deputy Administrator Benevento, Chief of Staff Mandy Gunasekara, Assistant Administrator Bodine, or another representative of the Administrator** – to participate in his place.

If this might be of interest to the Administrator's office, I would be glad to talk further at your convenience.

Regardless, from my vantage point outside of government, I'm extremely grateful for what everyone inside the Administration is doing to help tackle this challenge. Please tell everyone there to keep up the great work!

Very best,
Jeff

Jeffrey H. Wood
Partner

Baker Botts L.L.P.
jeff.wood@bakerbotts.com
T +1.202.639.7732
M +1.202.600.1630

700 K Street NW
Washington DC 20001
USA

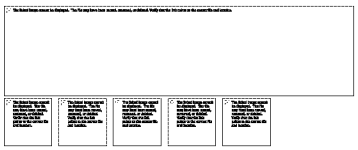

Confidentiality Notice:

The information contained in this email and any attachments is intended only for the recipient[s] listed above and may be privileged and confidential. Any dissemination, copying, or use of or reliance upon such information by or to anyone other than the recipient[s] listed above is prohibited. If you have received this message in error, please notify the sender immediately at the email address above and destroy any and all copies of this message.

View it as a Web Page.

Teleforum Townhall with EPA Administrator Wheeler on EPA's Response to COVID-19

In these challenging times, American industry is grappling with a host of rapidly evolving environmental, health and safety concerns arising from the pandemic spread of the coronavirus disease (COVID-19).

The U.S. Environmental Protection Agency (EPA) is taking action to approve disinfectants for the fight against COVID-19, reassuring the public about actions to protect U.S. water and wastewater systems, and working to resolve complex operational challenges facing the nation's energy, manufacturing, and transportation sectors, while also seeking to protect public health and the environment through the enforcement of environmental laws in close cooperation with the States and Tribes.

Please join us this Wednesday at 3:15 p.m. (EST) for a ***Teleforum Townhall with EPA Administrator Andrew Wheeler***. This special event will provide an opportunity for EPA leadership to update the regulated community on:

- EPA's latest actions related to coronavirus (COVID-19);
- Key personnel at EPA currently coordinating coronavirus-related efforts; and
- EPA's continued efforts to ensure protection of human health and the environment.

An opportunity for moderated Q&A from the audience will be provided.

JOIN THIS TELEFORUM TOWNHALL

WEDNESDAY, MARCH 25, 2020

3:15 p.m. - 3:45 p.m. (EST)

QUESTIONS

Katie Marshall at +1.713.229.1622

About Baker Botts L.L.P.
Baker Botts is an international law firm of more than 750 lawyers practicing throughout a network of 14 offices around the globe. Based on our experience and knowledge of our clients' industries, we are recognized as a leading firm in the energy and technology sectors. Throughout our 180-year history, we have provided creative and effective legal solutions for our clients while demonstrating an unrelenting commitment to excellence. For more information, please visit bakerbotts.com.

BAKER BOTTS

AUSTIN BEIJING BRUSSELS DALLAS DUBAI HONG KONG HOUSTON LONDON MOSCOW NEW YORK PALO ALTO RIYADH SAN FRANCISCO WASHINGTON, D.C.

The materials in this communication are made available by Baker Botts L.L.P. for informational purposes only and are not legal advice. The transmission and receipt of information contained in this communication do not form or constitute an attorney-client relationship. If these materials are inconsistent with the rules governing attorney communications in a particular jurisdiction, and the materials result in a client contact in such jurisdiction, Baker Botts may be prohibited from assuming representation of the client contact.

Under the rules of certain jurisdictions, this communication may constitute 'Attorney Advertising'.

© Baker Botts L.L.P. 2020. All rights reserved.

Manage Email Preferences | Unsubscribe | Forward to Friend

Message

From: jeff.wood@BakerBotts.com [jeff.wood@BakerBotts.com]
Sent: 3/24/2020 5:11:40 PM
To: Lane, Holly [Lane.Holly@epa.gov]; Molina, Michael [molina.michael@epa.gov]
CC: Gunasekara, Mandy [gunasekara.Mandy@epa.gov]; Hyman, Alana [Hyman.Alana@epa.gov]; Schiermeyer, Corry [schiermeyer.corry@epa.gov]; McFaul, Jessica [mcfaul.jessica@epa.gov]; wende.arrollado@bakerbotts.com; Kaitlin.Leddy@BakerBotts.com; katie.marshall@BakerBotts.com
Subject: RE: Coronavirus Industry Event - Invitation for the Administrator

We'll be glad to. When would a prep call work for your team? I think we talked about setting aside 15 minutes tomorrow to walk through the On24 system, etc. Thanks!

From: Lane, Holly <Lane.Holly@epa.gov>
Sent: Tuesday, March 24, 2020 1:09 PM
To: Wood, Jeffrey <jeff.wood@BakerBotts.com>; Molina, Michael <molina.michael@epa.gov>
Cc: Gunasekara, Mandy <gunasekara.Mandy@epa.gov>; Hyman, Alana <Hyman.Alana@epa.gov>; Schiermeyer, Corry <schiermeyer.corry@epa.gov>; McFaul, Jessica <mcfaul.jessica@epa.gov>; Arrollado, Wende <wende.arrollado@bakerbotts.com>; Leddy, Kaitlin <Kaitlin.Leddy@BakerBotts.com>; Marshall, Katie <katie.marshall@BakerBotts.com>
Subject: RE: Coronavirus Industry Event - Invitation for the Administrator

[EXTERNAL EMAIL]

Oh perfect. Would you mind sending us a participant list this evening and tomorrow before the call?

Thank you so much!

Holly Lane
Director of Advance
202-577-6013 Cell
202-564-4753 Office
lane.holly@epa.gov

From: jeff.wood@BakerBotts.com <jeff.wood@BakerBotts.com>
Sent: Tuesday, March 24, 2020 12:52 PM
To: Lane, Holly <Lane.Holly@epa.gov>; Molina, Michael <molina.michael@epa.gov>
Cc: Gunasekara, Mandy <gunasekara.Mandy@epa.gov>; Hyman, Alana <Hyman.Alana@epa.gov>; Schiermeyer, Corry <schiermeyer.corry@epa.gov>; McFaul, Jessica <mcfaul.jessica@epa.gov>; wende.arrollado@bakerbotts.com; Kaitlin.Leddy@BakerBotts.com; katie.marshall@BakerBotts.com
Subject: RE: Coronavirus Industry Event - Invitation for the Administrator

Thanks! Yes, we'll send out now and make sure all of you receive the invitation.

From: Lane, Holly <Lane.Holly@epa.gov>
Sent: Tuesday, March 24, 2020 12:50 PM
To: Wood, Jeffrey <jeff.wood@BakerBotts.com>; Molina, Michael <molina.michael@epa.gov>
Cc: Gunasekara, Mandy <gunasekara.Mandy@epa.gov>; Hyman, Alana <Hyman.Alana@epa.gov>; Schiermeyer, Corry <schiermeyer.corry@epa.gov>; McFaul, Jessica <mcfaul.jessica@epa.gov>
Subject: RE: Coronavirus Industry Event - Invitation for the Administrator

[EXTERNAL EMAIL]

I just confirmed with Michael and he is fine with you sending out the invite. Can you include our team in what you send out and the call in information?

Thank you!

Holly Lane
Director of Advance
202-577-6013 Cell
202-564-4753 Office
lane.holly@epa.gov

From: jeff.wood@BakerBotts.com <jeff.wood@BakerBotts.com>
Sent: Tuesday, March 24, 2020 9:59 AM
To: Molina, Michael <molina.michael@epa.gov>
Cc: Gunasekara, Mandy <gunasekara.Mandy@epa.gov>; Hyman, Alana <Hyman.Alana@epa.gov>; Lane, Holly <Lane.Holly@epa.gov>; Schiermeyer, Corry <schiermeyer.corry@epa.gov>; McFaul, Jessica <mcfaul.jessica@epa.gov>
Subject: RE: Coronavirus Industry Event - Invitation for the Administrator

315pm ET works great for us. Should we issue the invite now, or await final confirmation? Thank you!

From: Molina, Michael <molina.michael@epa.gov>
Sent: Tuesday, March 24, 2020 9:57 AM
To: Wood, Jeffrey <jeff.wood@BakerBotts.com>
Cc: Gunasekara, Mandy <gunasekara.Mandy@epa.gov>; Hyman, Alana <Hyman.Alana@epa.gov>; Lane, Holly <Lane.Holly@epa.gov>; Schiermeyer, Corry <schiermeyer.corry@epa.gov>; McFaul, Jessica <mcfaul.jessica@epa.gov>
Subject: Re: Coronavirus Industry Event - Invitation for the Administrator

[EXTERNAL EMAIL]

Good morning Jeff.

If we could start at 3:15, that would work best. The Administrator has a 4:00 now.

We can keep 3:30 but I am worried that the talk may bleed over a little. So, if we bumped it up to 3:15, I think that would be optimal.

Michael.

Sent from my iPhone

> On Mar 23, 2020, at 4:30 PM, jeff.wood@BakerBotts.com <jeff.wood@bakerbotts.com> wrote:
>
> Mandy and Michael, thank you again for taking time to talk with our team. We have checked schedules and any time after 330pm ET on Wednesday is optimal, but we definitely defer to you on schedule and can accommodate any time that works for your team. Thank you again. Jeff
>
> ---
>
> **From:** Molina, Michael <molina.michael@epa.gov>
> **Sent:** Monday, March 23, 2020 3:13 PM

To: Wood, Jeffrey <jeff.wood@BakerBotts.com>
Cc: Gunasekara, Mandy <gunasekara.Mandy@epa.gov>; Hyman, Alana <Hyman.Alana@epa.gov>; Lane, Holly <Lane.Holly@epa.gov>; Schiermeyer, Corry <schiermeyer.corry@epa.gov>; McFaul, Jessica <mcfaul.jessica@epa.gov>
Subject: Re: Coronavirus Industry Event - Invitation for the Administrator

[EXTERNAL EMAIL]

That would be a great help. Thank you Jeff.

Holly and Jess, can you please join me on the call?

MM

Sent from my iPhone

On Mar 23, 2020, at 3:12 PM, jeff.wood@BakerBotts.com <jeff.wood@bakerbotts.com> wrote:

Thanks Michael, yes, 4pm today (or any time after) works for me. Would you like me to circulate a call-in #?

From: Molina, Michael <molina.michael@epa.gov>
Sent: Monday, March 23, 2020 3:00 PM
To: Wood, Jeffrey <jeff.wood@BakerBotts.com>
Cc: Gunasekara, Mandy <gunasekara.Mandy@epa.gov>; Hyman, Alana <Hyman.Alana@epa.gov>; Lane, Holly <Lane.Holly@epa.gov>; Schiermeyer, Corry <schiermeyer.corry@epa.gov>; McFaul, Jessica <mcfaul.jessica@epa.gov>
Subject: Re: Coronavirus Industry Event - Invitation for the Administrator

[EXTERNAL EMAIL]

Hi jeff,

We talked about this this morning. Can you chat this early evening (4:00ish) to go over some of the points you laid out? My initial thought is Wednesday. I have cc'd part of the team that would help on this.

Michael.

(202) 568-1602

Sent from my iPhone

On Mar 19, 2020, at 5:56 PM, jeff.wood@BakerBotts.com <jeff.wood@bakerbotts.com> wrote:

Dear Mandy and Mike,

I hope you both are well and staying safe!

On behalf of Baker Botts, I am reaching out to personally invite Administrator Wheeler (or his designee) to participate in an industry webinar/conference call, at a time that might work for his schedule in the next 3-7 days. We would anticipate the event lasting for 30-45 minutes. The purpose of the event is to provide a platform for EPA to update a broad cross-section of the regulated community concerning:

- EPA actions related to coronavirus;
- EPA resources available to the public and regulated community;
- Key EPA personnel coordinating coronavirus-related efforts; and
- EPA's continued efforts to ensure protection of human health and the environment.

This week, our firm held a coronavirus-related webinar and had over 400 register to attend. For an EPA-focused event with the Administrator, we would expect an even larger response. Our plan is to invite a broad cross-section of industry and environmental professionals, as well as the various associations representing the energy, transportation, and manufacturing sectors. As we have done with our similar events (including the Law & Policy Forum that the Administrator graciously spoke at last year), we would also anticipate a brief opportunity for moderated questions from the audience. As these are likely just the early days of an evolving and complex crisis, we would envision this initial discussion as providing a possible platform to educate the public and regulated community as well as serve as another avenue for continuing to help disseminate information going forward.

Thank you for considering this invitation. While we would obviously be delighted for the Administrator to accept this invitation, I know how busy he is, so we would also be very glad for **another senior EPA representative – such as Associate Deputy Administrator Benevento, Chief of Staff Mandy Gunasekara, Assistant Administrator Bodine, or another representative of the Administrator** – to participate in his place.

If this might be of interest to the Administrator's office, I would be glad to talk further at your convenience.

Regardless, from my vantage point outside of government, I'm extremely grateful for what everyone inside the Administration is doing to help tackle this challenge. Please tell everyone there to keep up the great work!

Very best,
Jeff

Jeffrey H. Wood
Partner

Baker Botts L.L.P.
jeff.wood@bakerbotts.com
T +1.202.639.7732
M +1.202.600.1630

700 K Street NW
Washington DC 20001
USA

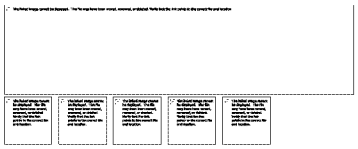

Confidentiality Notice:

The information contained in this email and any attachments is intended only for the recipient[s] listed above and may be privileged and confidential. Any dissemination, copying, or use of or reliance upon such information by or to anyone other than the recipient[s] listed above is prohibited. If you have received this message in error, please notify the sender immediately at the email address above and destroy any and all copies of this message.

Appointment

From: jeff.wood@BakerBotts.com [jeff.wood@BakerBotts.com]
on behalf of katie.marshall@BakerBotts.com [katie.marshall@BakerBotts.com]
Sent: 3/24/2020 10:58:59 PM
To: Hyman, Alana [Hyman.Alana@epa.gov]; Lane, Holly [Lane.Holly@epa.gov]; Schiermeyer, Corry [schiermeyer.corry@epa.gov]; McFaul, Jessica [mcfaul.jessica@epa.gov]; Gunasekara, Mandy [gunasekara.Mandy@epa.gov]; Molina, Michael [molina.michael@epa.gov]

Subject: FW: Teleforum Townhall with EPA Administrator Wheeler About COVID-19
Location: Dial-In details below

Start: 3/25/2020 6:30:00 PM
End: 3/25/2020 7:45:00 PM
Show Time As: Tentative

Recurrence: (none)

-----Original Appointment-----
From: Marshall, Katie
Sent: Tuesday, March 24, 2020 6:05 PM
To: Marshall, Katie; Arrollado, Wende; Wood, Jeffrey
Subject: Teleforum Townhall with EPA Administrator Wheeler About COVID-19
When: Wednesday, March 25, 2020 1:30 PM-2:45 PM (UTC-06:00) Central Time (US & Canada).
Where: Dial-In details below

The webinar is set to start at 3:15 p.m. ET. However, as noted in this invitation, please plan to arrive 30 minutes prior to the official start to get setup. We're going to do a sound check etc. and make sure we're all set to go.

Dial-In Number: Ex. 6
Dial-In Passcode: Ex. 6
Presenter Log-In:
Ex. 6 (Log in as a **Presenter** using your name and email)

Confidentiality Notice:

The information contained in this email and any attachments is intended only for the recipient[s] listed above and may be privileged and confidential. Any dissemination, copying, or use of or reliance upon such information by or to anyone other than the recipient[s] listed above is prohibited. If you have received this message in error, please notify the sender immediately at the email address above and destroy any and all copies of this message.

Message

From: jeff.wood@BakerBotts.com [jeff.wood@BakerBotts.com]
Sent: 3/25/2020 4:51:15 PM
To: McFaul, Jessica [mcfaul.jessica@epa.gov]; Gunasekara, Mandy [gunasekara.Mandy@epa.gov]; Molina, Michael [molina.michael@epa.gov]
CC: Hyman, Alana [Hyman.Alana@epa.gov]; Lane, Holly [Lane.Holly@epa.gov]; Schiermeyer, Corry [schiermeyer.corry@epa.gov]; wende.arrollado@bakerbotts.com; Kaitlin.Leddy@BakerBotts.com; katie.marshall@BakerBotts.com; Irving, John [Irving.John@epa.gov]
Subject: RE: Invitation: Teleforum Townhall with EPA Administrator Wheeler on EPA's Response to COVID-19 - March 25

Resending with John Irving on the chain per Jess's note below.

From: Wood, Jeffrey <jeff.wood@BakerBotts.com>
Sent: Wednesday, March 25, 2020 12:36 PM
To: McFaul, Jessica <mcfaul.jessica@epa.gov>; Gunasekara, Mandy <gunasekara.Mandy@epa.gov>; Molina, Michael <molina.michael@epa.gov>
Cc: Hyman, Alana <Hyman.Alana@epa.gov>; Lane, Holly <Lane.Holly@epa.gov>; Schiermeyer, Corry <schiermeyer.corry@epa.gov>; Arrollado, Wende <wende.arrollado@bakerbotts.com>; Leddy, Kaitlin <Kaitlin.Leddy@BakerBotts.com>; Marshall, Katie <katie.marshall@BakerBotts.com>
Subject: RE: Invitation: Teleforum Townhall with EPA Administrator Wheeler on EPA's Response to COVID-19 - March 25

Here are some of the most likely issues/topics to come up, based on early feedback from attendees. The RSVP list is now close to 350.

- Compliance relief (such as certain monitoring and reporting requirements) in circumstances where compliance is impractical due to COVID-19.
- EPA guidance to address how states should address these scenarios. States are taking a variety of approaches on compliance issues. In this pandemic situation, do you see EPA taking an active role in announcing national policies or approaches to environmental compliance? Do you think States are looking for EPA to do that?
- Some industries are facing imminent compliance deadlines and reporting dates on March 31st. Is EPA considering immediate relief for imminent deadlines, like no action assurances?
- Do you expect COVID-19 to cause a slowdown in completing priority actions in 2020?
- Regarding the $2 trillion COVID-19 legislation, do you know whether there are EPA programs funded through this new infusion of appropriations, or other EPA-related provisions that you're following?
- Force Majeure issues in Consent Decrees
- For the nation's refineries, it may not be feasible to conduct refinery "turnarounds" on the normal schedule (in the first quarter of the year) because, among other things, a shortage of workforce and contractors. Turnarounds are conducted, per EPA programs, to transition to summer fuel blends. Some turnarounds are already being postponed. Rescheduling turnarounds is not necessarily a simple or easy thing to do. Would you anticipate that EPA will be taking action to clarify compliance schedules and requirements for audits and analyses typically conducted during refinery turnarounds?

- Water and wastewater treatment systems face significant challenges. For example, reduced economic activity and other factors are reducing flows and usage rates, which could potentially lead to difficulties in water quality in some communities. Is this something EPA is tracking, and can you say at this point whether EPA plans to issue guidance for drinking water utilities?

From: Marshall, Katie <katie.marshall@BakerBotts.com>
Sent: Wednesday, March 25, 2020 12:20 PM
To: McFaul, Jessica <mcfaul.jessica@epa.gov>; Wood, Jeffrey <jeff.wood@BakerBotts.com>; Gunasekara, Mandy <gunasekara.Mandy@epa.gov>; Molina, Michael <molina.michael@epa.gov>
Cc: Hyman, Alana <Hyman.Alana@epa.gov>; Lane, Holly <Lane.Holly@epa.gov>; Schiermeyer, Corry <schiermeyer.corry@epa.gov>; Arrollado, Wende <wende.arrollado@bakerbotts.com>; Leddy, Kaitlin <Kaitlin.Leddy@BakerBotts.com>
Subject: RE: Invitation: Teleforum Townhall with EPA Administrator Wheeler on EPA's Response to COVID-19 - March 25

Jess,

Our webinar platform has a Q&A box that allows attendees to type questions in real time, and we will be able to view them similar to an email inbox. These questions are only visible to the presenters, and we will be able to see who is asking the question (name and company). If there are particular questions that you want to make a priority to answer, you can mark that in the webinar platform as well, which we will go over during the prep session.

We are allowing attendees to enter the webinar platform at 3:00 p.m. ET / 2:00 p.m. CT to begin submitting questions in advance of the live webinar.

Please let me know if you have any additional questions.

Best regards,

Katie Marshall
Client Relations Coordinator, Litigation
T +1.713.229.1622

From: McFaul, Jessica <mcfaul.jessica@epa.gov>
Sent: Wednesday, March 25, 2020 10:10 AM
To: Wood, Jeffrey <jeff.wood@BakerBotts.com>; Gunasekara, Mandy <gunasekara.Mandy@epa.gov>; Molina, Michael <molina.michael@epa.gov>
Cc: Hyman, Alana <Hyman.Alana@epa.gov>; Lane, Holly <Lane.Holly@epa.gov>; Schiermeyer, Corry <schiermeyer.corry@epa.gov>; Arrollado, Wende <wende.arrollado@bakerbotts.com>; Leddy, Kaitlin <Kaitlin.Leddy@BakerBotts.com>; Marshall, Katie <katie.marshall@BakerBotts.com>
Subject: RE: Invitation: Teleforum Townhall with EPA Administrator Wheeler on EPA's Response to COVID-19 - March 25

[EXTERNAL EMAIL]
Looping John Irving on this chain.

Jeff, would it be possible for stakeholders to submit any comments or questions about enforcement directly in the teleforum system that could be forwarded en mass to John?

Jess

From: jeff.wood@BakerBotts.com <jeff.wood@BakerBotts.com>
Sent: Tuesday, March 24, 2020 7:01 PM
To: Gunasekara, Mandy <gunasekara.Mandy@epa.gov>; Molina, Michael <molina.michael@epa.gov>
Cc: Hyman, Alana <Hyman.Alana@epa.gov>; Lane, Holly <Lane.Holly@epa.gov>; Schiermeyer, Corry <schiermeyer.corry@epa.gov>; McFaul, Jessica <mcfaul.jessica@epa.gov>; wende.arrollado@bakerbotts.com; Kaitlin.Leddy@BakerBotts.com; katie.marshall@BakerBotts.com
Subject: FW: Invitation: Teleforum Townhall with EPA Administrator Wheeler on EPA's Response to COVID-19 - March 25

Good evening Mandy and Michael,

Pasted below is the final invitation that went out today, along with our current RSVP list (so far, we have over 225 RSVPs from the organizations/companies listed below). We can provide an updated list tomorrow ahead of the event. I have also just forwarded a calendar invitation to this group for a pre-call prep session at 245pm ET tomorrow. If you prefer a different time for that prep call, just let us know. We definitely understand that not all of you will need to be on the prep call.

Thank you all again,
Jeff

RSVPs (as of 6pm ET – 3/24/20)
ALLETE
Alliant Energy
American Chemistry Council
American Petroleum Institute
Americas Styrenics LLC
Arkema
Ascend Performance Materials
BASF Corporation
Basin Electric Power Cooperative
BNSF Railway
BP America Inc.
BP Fuels NA Inc
Calpine Corporation
Celanese
Chemours
Chevron
CITGO Petroleum Corp.
Cogentrix Energy Power Management, LLC
CPS Energy
Dairyland Power Cooperative
Delek US Holdings, Inc.
Dominion Energy
Dow
DuPont
Eastman chemical
El Paso Electric Company

Energy Transfer
Entergy
Enterprise Products
EOG Resources
Evergreen Resources Group, LLC
Exxon Mobil
Georgia-Pacific Wood Products LLC
Goldman Sachs
Goodyear
Google
Great River Energy
Halliburton Energy Services
Hawaiian Electric
Hess Corporation
Hexion Inc.
Huntsman
Idaho Power Company
INEOS
International Paper
Johnson Matthey Inc.
KCPS
Kinder Morgan
Kindle Energy LLC
Koch
Kuraray America, Inc.
LG&E and KU Energy, LLC
Louisiana Chemical Association
LS Power Development
Lyondell Chemical Company
Magellan Midstream Partners
Marathon
Marathon Petroleum
Matador Resources Company
Minnesota Power
Motiva Enterprises LLC
Murphy Expl. & Prod. Co. - USA
National Grid
NRG
Occidental Petroleum Corporation
OG&E
Olin
Orion Engineered Carbons
Oxbow Calcining International LLC
OXEA Chemicals
OXY USA
Phillips66
PNM Resources
Salt River Project
Shell Oil Company
Southern Company
Talen
Tampa Electric Company
Targa Resources

TC Energy
Texas Brine
Texas Central
The Dow Chemical Company
The Goodyear Tire & Rubber Company
The Lubrizol Corporation
Total Petrochemicals & Refining
Toyota Motor North America
Tucson Electric Power
Valero Energy
Vistra Energy
W.R. Grace
Waste Management
Western Farmers Electric Coop
Westlake Chemical
Xcel Energy

View it as a Web Page.

Teleforum Townhall with EPA Administrator Wheeler on EPA's Response to COVID-19

In these challenging times, American industry is grappling with a host of rapidly evolving environmental, health and safety concerns arising from the pandemic spread of the coronavirus disease (COVID-19).

JOIN THIS TELEFORUM TOWNHALL

The U.S. Environmental Protection Agency (EPA) is taking action to approve disinfectants for the fight against COVID-19, reassuring the public about actions to protect U.S. water and wastewater systems, and working to resolve complex operational challenges facing the nation's energy, manufacturing, and transportation sectors, while also seeking to protect public health and the environment through the enforcement of environmental laws in close cooperation with the States and Tribes.

Please join us this Wednesday at 3:15 p.m. (EST) for a ***Teleforum Townhall with EPA Administrator Andrew Wheeler***. This special event will provide an opportunity for EPA leadership to update the regulated community on:

- EPA's latest actions related to coronavirus (COVID-19);
- Key personnel at EPA currently coordinating coronavirus-related efforts; and
- EPA's continued efforts to ensure protection of human health and the environment.

An opportunity for moderated Q&A from the audience will be provided.

WEDNESDAY, MARCH 25, 2020

3:15 p.m. - 3:45 p.m. (ET)
2:15 p.m. - 2:45 p.m. (CT)
12:15 p.m. - 12:45 p.m. (PT)

QUESTIONS

Katie Marshall at
+1.713.229.1622

About Baker Botts L.L.P.
Baker Botts is an international law firm of more than 750 lawyers practicing throughout a network of 14 offices around the globe. Based on our experience and knowledge of our clients' industries, we are recognized as a leading firm in the energy and technology sectors. Throughout our 180-year history, we have provided creative and effective legal solutions for our clients while demonstrating an unrelenting commitment to excellence. For more information, please visit bakerbotts.com.

AUSTIN BEIJING BRUSSELS DALLAS DUBAI HONG KONG HOUSTON LONDON
MOSCOW NEW YORK PALO ALTO RIYADH SAN FRANCISCO WASHINGTON, D.C.

The materials in this communication are made available by Baker Botts L.L.P. for informational purposes only and are not legal advice. The transmission and receipt of information contained in this communication do not form or constitute an attorney-client relationship. If these materials are inconsistent with the rules governing attorney communications in a particular jurisdiction, and the

materials result in a client contact in such jurisdiction, Baker Botts may be prohibited from assuming representation of the client contact.

Under the rules of certain jurisdictions, this communication may constitute 'Attorney Advertising'.

© Baker Botts L.L.P. 2020. All rights reserved.

Manage Email Preferences | Unsubscribe | Forward to Friend

.

Confidentiality Notice:

The information contained in this email and any attachments is intended only for the recipient[s] listed above and may be privileged and confidential. Any dissemination, copying, or use of or reliance upon such information by or to anyone other than the recipient[s] listed above is prohibited. If you have received this message in error, please notify the sender immediately at the email address above and destroy any and all copies of this message.

Message

From: Gunasekara, Mandy [/O=EXCHANGELABS/OU=EXCHANGE ADMINISTRATIVE GROUP (FYDIBOHF23SPDLT)/CN=RECIPIENTS/CN=F639EA28AF4C455493939E3129260707-GUNASEKARA,]
Sent: 1/5/2021 8:35:58 PM
To: Mandy Gunasekara (gunasekara.Mandy@epa.gov) [gunasekara.Mandy@epa.gov]
CC: Barker, Kendal [Barker.Kendal@epa.gov]
BCC: lincolnferguson[Ex. 6] Tatebennett[Ex. 6] jahanwilcox[Ex. 6] Kelsidaniel[Ex. 6] amyjgraham[Ex. 6] lizsbowman[Ex. 6] Hayleyford[Ex. 6] SarahAGreenwalt[Ex. 6] forrestmcmurray[Ex. 6] millan.hupp[Ex. 6] Syd.hupp[Ex. 6] Samantha.Davis[Ex. 6] kenewag[Ex. 6] albertcharles[Ex. 6] Mabboud[Ex. 6] John.konkus@aecom.com; KKundinger[Ex. 6] daisycletendre[Ex. 6] Troymageelyons[Ex. 6] Alexanderjdominguez[Ex. 6] Justinschwab[Ex. 6] Hwgreaves[Ex. 6] aaronl.szabo[Ex. 6] stephenlgordon[Ex. 6] christopherebeach[Ex. 6] clintwoods[Ex. 6] wehrum[Ex. 6] mleopold@carltonfields.com; catanzaro@cgcn.com
Subject: INVITATION: 14th EPA Administrator Portrait Unveiling

Dear Friends,

Please join us for the unveiling of the official portrait of the 14th Administrator of the United States Environmental Protection Agency – the Honorable E. Scott Pruitt – hosted by EPA Administrator Andrew Wheeler. The ceremony will take place on **Friday, January 15 from 10:00-11:00 a.m. EST** and will be held in the Green Room at the WJC Building North at 1200 Pennsylvania Avenue, NW.

During the event, we will commemorate former Administrator Pruitt's accomplishments during his tenure and recognize his dedication to protect human health and the environment. Light refreshments will be provided immediately following the event. Please RSVP to Kendal Barker (cc'd here) by January 12 at 5 p.m.

Please let me know if you have any questions and I hope you can join this special event!

Regards,
Mandy

Mandy M. Gunasekara
Chief of Staff, US EPA
C: 202-288-5777
"We serve at the pleasure of the President."

Message

From: Steve Milloy [Ex. 6]
Sent: 7/30/2020 5:09:23 PM
To: Gunasekara, Mandy [gunasekara.Mandy@epa.gov]
CC: Wheeler, Andrew [wheeler.andrew@epa.gov]
Subject: Today's WH glider meeting

Hi Mandy,

Hope all is well.

Sorry I couldn't attend the White House glider meeting today.

But just as a reminder, the 2016 election was more about MAGA folks like Tommy Fitzgerald than Chinese-owned Volvo and dishonest resistance EPA career staff.

Best,

Steve

Message

From: Thomas J. Pyle [tpyle@ierdc.org]
Sent: 6/5/2020 12:49:41 PM
To: Gunasekara, Mandy [gunasekara.Mandy@epa.gov]
CC: Willis, Sharnett [Willis.Sharnett@epa.gov]; Lisa Wallace [lwallace@ierdc.org]
Subject: Invitation Request to Host an IER Webinar
Attachments: IER EPA Meeting Request.pdf

Dear Mandy:

Attached please find a letter invitation request for you to host an Institute for Energy Research (IER) policy forum via webconference. As you know, IER is a 501(c)3 not-for-profit organization. As such, the webinar is for educational purposes only. Please let me know if you have any questions.

Sincerely,
Tom

THOMAS J. PYLE
Institute for Energy Research
Cell: 202.744.4886
Twitter: @TomJPyle

IER INSTITUTE FOR ENERGY RESEARCH.

June 5, 2020

Mandy Gunasekara
Chief of Staff to EPA Administrator Andrew Wheeler
U.S. Environmental Protection Agency
1200 Pennsylvania Ave NW
Washington, DC 20460

Dear Ms. Gunasekara:

The Institute for Energy Research (IER) is inviting you to join us by video for an educational webinar to discuss important and timely regulatory actions taken by the Trump Administration and the Environmental Protection Agency (EPA) in particular. As of now, the meeting is scheduled for June 23 at 1:00 p.m. EDT.

The Institute for Energy Research (IER) is a not-for-profit organization that conducts intensive research and analysis on the functions, operations, and government regulation of energy markets.
IER is a leading voice promoting and defending the free market in the energy and environment arena. IER believes that public policy must be based on objective science, not emotion or improbable scenarios. Government policies should be predictable, simple, and technology neutral. IER generates research and analysis for policymakers, the media, and the American people and delivers them in impactful ways.

Our small audience would be interested in your insights on the benefits to both the American economy and the environment of recent EPA rules. Of course, we would also open the forum up to any topics you'd be interested in sharing.

We expect the video session to last no more than one hour. The attendees of this webinar will include supporters of American energy and those striving to achieve President Trump's often stated goal of energy dominance. This will be an off the record conversation. No press will be invited. If you have any questions, please feel free to contact me by email at tpyle@ierdc.org or by phone at (202) 744-4886.

Sincerely,

Thomas J. Pyle
President
Institute for Energy Research

Message

From: Thomas J. Pyle [tpyle@ierdc.org]
Sent: 6/11/2020 3:44:28 PM
To: Willis, Sharnett [Willis.Sharnett@epa.gov]; Garrett Kehr [gkehr@ierdc.org]
CC: Lisa Wallace [lwallace@ierdc.org]; Gunasekara, Mandy [gunasekara.Mandy@epa.gov]
Subject: Re: Invitation Request to Host an IER Webinar

Hi, Sharnett. We're on track for this webinar. Sorry about the delay in following up. Your contact for IER is Garrett Kehr. I have included him in the response. I hope you all have a great Friday.

Best,
Tom

On Jun 5, 2020, at 6:20 PM, Thomas Pyle <tpyle@ierdc.org> wrote:

Thank you, Mandy. We look forward to you joining us. I will get back to you on Monday, Sharnett, with a point of contact. I'm the meantime, have a great weekend.

On Jun 5, 2020, at 5:55 PM, Gunasekara, Mandy <gunasekara.Mandy@epa.gov> wrote:

Tom,
Thank you for the invitation. I would be happy to join a policy forum.

Sharnett, can you please work with tom and his team to get everything set up?

Best,
Mandy

From: Thomas J. Pyle <tpyle@ierdc.org>
Sent: Friday, June 5, 2020 8:50 AM
To: Gunasekara, Mandy <gunasekara.Mandy@epa.gov>
Cc: Willis, Sharnett <Willis.Sharnett@epa.gov>; Lisa Wallace <lwallace@ierdc.org>
Subject: Invitation Request to Host an IER Webinar

Dear Mandy:

Attached please find a letter invitation request for you to host an Institute for Energy Research (IER) policy forum via webconference. As you know, IER is a 501(c)3 not-for-profit organization. As such, the webinar is for educational purposes only. Please let me know if you have any questions.

Sincerely,
Tom

THOMAS J. PYLE
Institute for Energy Research
Cell: 202.744.4886
Twitter: @TomJPyle

THOMAS J. PYLE
Institute for Energy Research
Cell: 202.744.4886
Twitter: @TomJPyle