ELECTRICAL CONTROL SPECIFICATIONS

PROTECCION TECHNICA ECOLOGICA, INC.

June 30, 1986

523682

(1052B)

DIVISION IX
ELECTRICAL

09010 ELECTRICAL CONTROL SPECIFICATIONS
INSTALLATIONS - GENERAL

Index

1. Scope

2. Codes and Standards

3. Civil Work

4. Alternates

5. Equipment Material Approval and Procurement

6. Shop Drawings

7. Factory Tests

8. Owner's Manuals, Spare Parts Lists

9. As-Built Drawings

10. Field Measurements

11. Fastening to Building Structures

12. Painting and Finishing

13. System Operation During Construction

14 Field Inspection and Tests

15. Local Authority Approval

16. Equipment Identification

17. Keys

18. Equipment Protection

19. Safety

09010 ELECTRICAL CONTROL SPECIFICATIONS
INSTALLATIONS

PART 1 GENERAL

1-01 SCOPE

A. The design and installation of electrical control systems shall be in accordance with this specification and as modified and supplemented by the Project Scope, and Drawings.

B. The Project Scope shall designate what systems are required. It shall define the extent of each system.

C. The project documents shall define the service and point of connection.

1-02 CODES AND STANDARDS

A. All electrical control system design, equipment, and installations shall comply with the latest issue of:

1. OSHA Electrical Standard 29 CFR Part 1910
2. OSHA Construction Safety and Health Regulations Title 29 Part 1926
3. NFPA 70 - National Electrical Code
4. ANSI-C2 - National Electrical Safety Code
5. API (American Petroleum Institute) publication:
   RP 550 - Manual on Installation of Refinery Instruments and Control Systems, Parts 1 through IV.
6. ANSI (American National Standards Institute) publication:
   C 85.1-1963 - Terminology for Automatic Control, including Supplements C 85.1a-1966 and C 85.1b-1972.
7. ISA (Instrument Society of America) publications:
   S 5.1 - Instrumentation Symbols and Identification, 1973
   RP 7.1 - Pneumatic Control Circuit Pressure Test, 1956.
   RP 20.1 - Specification Forms, 1956
   RP 20.2 - Specification Forms, 1961
8. SAMA (Scientific Apparatus Makers Association) publication:
   RC 22-11-1966 - Functional Diagramming of Instrument and Control Systems, Analog and Digital Systems

B. All local and federal codes and standards shall apply.

C. All requirements of the electric utility and telephone company serving the facility shall be met.

1-03 CIVIL WORK

A. Excavation and backfill for electrical shall be included in this section.

B. Concrete materials and installation for electrical equipment pads and foundations, manholes, hand holes, concrete encasement for conduit, and such, shall be included in this section.

1-04 ALTERNATES

A. Equipment and materials shall be from the manufacturers and types listed in the list of Acceptable Vendors and/or as listed in the specifications. Alternates will be considered only during the bidding phase, before the selection of a contractor. Alternates shall be approved by the PROTECO electrical engineer assigned to the project.

1-05 EQUIPMENT AND MATERIAL APPROVAL AND PROCUREMENT

A. Unless otherwise specified, all equipment and materials furnished by the contractor shall be new. All equipment and materials shall bear a UL label and shall be listed in the latest edition of approved equipment issued by the National Board of Fire Underwriters.

B. Where more than one of any specific item is required, all shall be of the same type and manufacture.

C. Within two weeks after the release of the contract, the contractor responsible for providing the electrical equipment and materials shall submit certification of specification adherence. This shall be for all items where acceptable manufacturers and/or types of items are specified. Where this is not compatible with the schedule, other dates shall be established and agreed to by the PROTECO electrical engineer assigned to the project.

D. Where more than one acceptable manufacturer is listed, PROTECO shall approve the proposed type and manufacturer before placement of the equipment purchase order.

E. Before commencing fabrication or manufacture of the items listed, the contractor shall submit shop drawings for review by the PROTECO electrical engineer.

1-06 SHOP DRAWINGS

A. To expedite review of manufacturer's shop drawings, a copy of shop drawings shall be submitted directly to the architect/engineer. This submittal shall not relieve the contractor or maanufacturer from responsibility of submitting shop drawings in the mannner prescribed in the contract

documents. This is intended to expedite PROTECO comments to the architect/engineer, electrical subcontractor, and subsequently to the manufacturer.

B. When required as a part of a project, approval of major equipment shall be "on-the-board" at the manufacturer's plant. Representatives shall attend from the architect/engineer and/or PROTECO.

C. Submittals shall include complete data on the equipment to be provided and shall include sufficient contractor prepared installation drawings to complete the work. Submittals shall be coordinated with the work of other trades prior to submittal. Submittals shall be accumulated and submitted on a system basis to the extent possible. Complete sets of drawings shall be submitted on equipment such as substations.

D. Manufacturer's drawings shall be certified for and properly identified with the application for which they are being proposed and shall use the same equipment identification as shown in the contract documents.

E. Drawings showing more than one model or size shall be marked to indicate the model or size being proposed.

F. Wiring and interconnection diagrams shall be provided for each system and their inter-connected systems. The diagrams shall show detailed multi-line wiring with terminal points and wire numbers identified and cross referenced to associated equipment drawings. The diagrams shall be sufficiently detailed for field installation and shall show interfacing with other equipment or systems.

1-07 FACTORY TESTS

A. Results of factory tests on major equipment shall be documented, reproduced and transmitted to PROTECO's representative as directed in appplicable sections of these specifications. PROTECO shall have the right to witness factory tests.

1-08 OWNER'S MANUALS, SPARE PARTS LISTS

A. Upon energization of each major equipment or system, the contractor shall transmit to PROTECO's representative four bound copies of an owner's manual. Manual shall include a set of approved shop drawings, maintenance procedures, troubleshooting guidebook (when applicable), serial numbers, full parts list, complete spare parts lists and manufacturer's catalog information. Spare parts lists shall separate those parts which are recommended for stocking on PROTECO's premises and those parts which can be obtained from stock at the nearest supplier, with the name and location of that supplier. Manuals shall be identified by system or equipment arrangement.

1-09 AS-BUILT DRAWINGS

A. Records shall be kept of deviations in location or elevation of any underground or concealed installation from that shown on project or on shop drawings. Records shall also be kept of any significant changes in above ground installations and changes to circuiting and control diagrams. Records shall consist of marked drawings or shop drawings and shall be submitted to PROTECO's representative during construction. No such deviations from the drawings shall be made without prior approval by a PROTECO representative.

B. As-built drawings shall include location of conduit, wiring, boxes and access panels in concealed spaces, wiring, boxes and access panels in concealed spaces, wiring splices, splice boxes, and equipment for systems or equipment not detailed. As-built drawings shall be submitted to PROTECO's representative upon construction completion.

1-10 FIELD MEASUREMENTS

A. Contractor shall verify in the field, dimensions and clearances affecting the installation in relation to established datum, to building openings and clearances and to the work of other trades.

B. Contractor shall consult other trades furnishing equipment that requires electrical connection. He shall obtain data, shop drawings, catalog cuts and information necessary for properly installing the equipment.

C. Should interferences occur which necessitate deviation from layout or dimensions shown, PROTECO's representative shall be notified and shall authorize any changes before work proceeds.

1-11 FASTENING TO BUILDING STRUCTURES

A. Drilling, welding or the use of explosive driven fasteners on building structures shall require written prior approval by PROTECO's representative for each type of application except where so detailed.

B. Equipment shall not be attached to or supported from the roof deck; from removable or knockout panels; or temporary walls or partitions.

C. Electrical equipment mounted on walls situated in damp or wet locations or adjacent to liquid piping shall be installed at least 1/2 inch away from the interior surface.

1-12 PAINTING AND FINISHING

A. Finishes marred, scratched or dented during shipping, handling or installation shall be repaired and touched up to match the original finish.

B. Finish painting of conduit, hangers and other installation materials will be performed along with general painting of the structure under specification section for "painting".

1-13 SYSTEM OPERATION DURING CONSTRUCTION

A. Contractor shall be responsible for operation and maintenance of construction and/or temporary power system until the permanent service and electrical system are installed.

B. Contractor shall be responsible for operation and maintenance of systems or equipment temporarily placed in operation for testing and adjusting purposes or for the convenience or necessity of contractor prior to final acceptance by PROTECO.

C. Contractor shall instruct PROTECO's operating personnel in the operation of electrical equipment during energization prior to acceptance by PROTECO.

1-14 INSPECTIONS AND TESTS

A. Tests shall be performed on electrical equipment and complete systems as required under the project documents.

B. The contractor shall notify the PROTECO representative at least 24 hours before performing tests. The representative shall be provided the opportunity to witness the testing.

C. The cost of labor, materials, instruments, and supplies required for testing shall be borne by contractor.

D. Operational and performance tests on equipment which normally operates only during certain seasons of the year shall be made during the appropriate season and at such time when ability of equipment to perform at design capacity can be demonstrated.

E. Material and equipment damaged or shown to be defective during tests or unable to perform at design or rated capacity shall be replaced at no cost to PROTECO.

F. PROTECO reserves the right to witness manufacturer's tests and the manufacture and assembly of electrical equipment prior to shipment to the site.

1-15 LOCAL AUTHORITY APPROVAL

A. The contractor shall obtain local authority approval for the complete electrical system installation.

1-16 EQUIPMENT IDENTIFICATION

A. Furnish and install nameplates and labels as specified herein or as shown. The name plate shall identify the equipment's purpose; identification number; feeder designation; location; and special operational notes.

B. Nameplates shall be engraved laminated phenolic plastic with black letters on white background, unless indicated to the contrary. The size of the nameplates shall be compatible with the appplication with not less than 1/4" letters.

C. Equipment identification shall be visible after installation without disturbing or exposing interior parts or wiring. Titles and method shall conform to equipment identification shown.

D. Equipment identification name plate titles and methods shall be submitted as shop drawings for approval.

E. Special tools required for any electrical equipment shall be clearly identified with that equipment.

1-17 KEYS

A. Keys for electrical equipment shall be turned over to PROTECO's representative. Duplicates shall not be retained.

B. Keys for each lock shall be securely wired together and plainly marked to show the lock number and equipment they operate.

C. The location of the lock shall be indicated on the tag by building name or number, panel number, switch number, room name or number.

1-18 EQUIPMENT PROTECTION

A. Electrical equipment shall be shipped, received, stored, and incorporated into the work in a manner which is consistent with its ultimate design intent.

B. Equipment subject to deterioration, either externally or internally, due to atmospheric conditions shall be preserved, stored, and maintained by contractor in accordance with the equipment suppliers recommendations prior to acceptance.

1-19 SAFETY

A. PROTECO safety requirements shall be met. These shall include lockout-tagout of all energy sources during construction and start-up work on all equipment or systems. The subcontractors and electrical service engineers shall provide assurance to PROTECO that safe work practices will be followed.

DIVISION IX
CONTROL AND INSTRUMENTATION

09011 INSTRUMENTATION
GENERAL REQUIREMENTS

1. SCOPE

This specification covers general requirements for the design, installation and testing of instruments and control equipment for chemical and petrochemical plants and other industrial applications.

2. REFERENCES

2.1 API (American Petroleum Institute) publication:

RP 550 - Manual on Installation of Refinery Instruments and Control Systems, Parts I through IV.

2.2 ANSI (American National Standards Institute) publications:

C 85.1-1963 - Terminology for Automatic Control, including Supplements C 85.1a-1966 and C 85.1b-1972.

2.3 ISA (Instrument Society of America) publications:

S 5.1 - Instrumentation Symbols and Identification, 1973
RP 7.1 - Pneumatic Control Circuit Pressure Test, 1956
RP 20.1 - Specification Forms, 1956
RP 20.2 - Specification Forms, 1961

2.4 NFPA (National Fire Protection Association) publications

2.5 SAMA (Scientific Apparatus Makers Association) publication:

RC 22-11-1966 - Functional Diagramming of Instrument and Control Systems, Analog and Digital Systems

3. GENERAL

3.1 Instrumentation shall conform to requirements of applicable specification unless otherwise defined by the written Project Specifications or other project documents defining exceptions or modifications approved by Proteco, such as purchase specifications, loop drawings, and agreed to minutes of meetings.

3.2 The Instrumentation specs are based on API RP 550; specific exceptions and modifications are noted in individual specifications. Where no modifications are made, those practices described in API RP 550 as "advisable," "most common," and so forth, shall be considered Proteco requirements.

3.3 The term "Proteco approval" shall be construed as meaning written approval.

3.4 Mercury instruments, such as mercury thermometers, capillary systems and temperature transmitters, shall not be used in new plants or units.

4. INSTRUMENT TERMINOLOGY, SYMBOLS AND DATA SHEETS

4.1 Terminology for automatic control shall conform to ANSI C 85.1.

4.2 Instrumentation symbols shall conform to ISA S 5.1. Subject to Proteco approval, SAMA FC 22-11 functional diagramming symbols may be used for utility areas.

4.3 Data sheets contained in ISA RP 20.1 and RP 20.2 shall be used except where Proteco approves the use of a contractor's normal document. If used, contractor's document shall include, as a minimum, all data required on the ISA Data Sheets.

5. DESIGN CONSIDERATIONS

5.1 Instrumentation Criteria

5.1.1 All control instrumentation and associated field transmitters, transducers and relays shall be of the solid-state electronic type, except as noted in Paragraphs 5.1.2 and 5.1.7.

5.1.2 When electronic type, the field equipment transmitters, transducers and relays shall be mounted in a classified process area. The equipment shall be "non-incendive" or instrinsically safe. Where such equipment is not available, alternative safety measures, such as providing explosion proof housings and purging, shall be taken, subject to Proteco approval.

5.1.3 Instrumentation shall meet requirements of applicable electrical and local codes as well as applicable association or certifying agency standards of the country and locale of installation. Such organizations include the National Fire Protection Association (NFPA), Physikalisch Technische Bundesanstalt (PTB), British Approval Service for Electrical Equipment in Flammable Atmospheres (BASEEFA), Canadian Standards Association (CSA), Factory Mutual Systems (FM) and Underwriters' Laboratories, Inc. (UL). Any instrument loop not meeting certification requirements of the country and locale of installation requires Proteco approval prior to purchase or installation.

5.1.4 Instrumentation for utilities, tank farm facilities and stabilization building shall meet the requirements of Paragraph 5.1.1. Where area classification permits, requirements of Paragraph 5.1.2 need not apply.

5.1.5 Contractor shall verify in writing that all instrument installations satisfy existing local codes.

5.1.6 Locally mounted control loops shall be as shown on the P & I diagrams. All local field-mounted controllers shall be of the indicating type with auto/manual facilities unless deleted by the Project Specifications.

5.1.7 When economically justified or required by local codes, pneumatic central control instrumentation may be used, subject to Proteco approval. Economic considerations shall include but not be limited to the following factors:

a. Initial capital cost of hardware.
b. Projected maintenance costs.
c. Reliability of the system.
d. Cost of replacement parts and test equipment required.
e. Cost of backup operating for power failure.
f. Purging systems and their operating cost and application.
g. Tubing installation costs including four pipe systems.

5.2 Failure Requirements

5.2.1 All instruments, pneumatic or electronic, shall fail to the safest position or lock in place upon air or power failure. Control valves that are required to fail "safe" on air failure should be spring assisted. Accumulators with piston-actuator-type associated switching valves shall be avoided. Proteco shall have final approval of the failure position of all instruments and related components. Normally, liquid product valves and heater fuel supply valves shall fail closed. Temperature controllers shall fail in the safest direction upon thermocouple or power circuit failure. Safety shutoff valves on vessels, pump suctions, compressors, and depressuring valves shall remain in position. Power supply lines shall be fireproofed.

5.2.2 Vendors of electronic instrumentation shall supply the following information so that failure action analysis can be made:

a. Maximum time the power source can be interrupted without disruption of control circuit operations. This shall be given in hertz, seconds, or minutes. For time spans of 0 to 10 seconds, curves are preferred. For longer time spans, tabulated points are satisfactory.

b. Quality of power supply required in terms of maximum and minimum voltage level and maximum ripple in millivolts (peak to peak) that can be tolerated.

c. Action of the instruments upon reestablishment of power, whether drive full-scale up, drive full-scale down, or lock in place.

5.3 Instrument Locations

Instruments and instrument connections including terminal and juction boxes, control equipment, and relief valves shall be located so that they are easily accessible from grade, permanent platforms or stairways for ease in operation, inspection and maintenance. Locations shall also minimize the possibility of damage from passing or falling objects and fire. Where a clear area allows access from a ladder or mobile platform to an instrument or element not more than 4.5 m (15 feet) above grade, a permanent platform shall not be required.

5.4 Instrument Air Compressors and Dryers

Instrument air supply and drying equipment shall be in accordance with applicable specifications. System design shall be based on supplying air that is clean, dry and free of oil vapors and has a dryer outlet dewpoint which is below the lowest ambient temperature by at least 10 degrees on Celsius scale (18 degrees Fahrenheit scale). A dryer with automatic control as required shall be used.

5.5 Electrical Area Classification

5.5.1 All electrical or electronic instrumentation equipment shall conform to electrical area classificaitons. Enclosures or cabling and grounding systems for all field-mounted or local panel-mounted electrical or electronic instruments (or instruments having electrical connections or power) shall conform to the requirements of the electrical classification of the area of installation. Housings located in unclassified outdoor areas or in unprotected areas shall meet the specifications of NEMA 4X.

5.5.2 Special attention shall be given to those instrument installations which meet all area classifications and code requirements but may serve as a path for flammable gases or liquids to unclassified areas, even under normal conditions. Such paths may be formed by:

a. Cable, conduit or tubing runs.
b. Bleed valves or conduit or cable runs to solenoid valves used as block and bleed valves.

c. Air lines to pressure balance valves without isolation relays or dual diaphragms with a vent.
d. Air and electrical lines to explosion proof housings designed for internal leaks rather than external sources of hydrocarbon, such as an analyzer housing.
e. Thermocouple installations with flexible conduit but without seals.

Seals, vents, cable stripping or isolation relays shall be used to break such paths.

5.6 Electrical Power Supply

5.6.1 Electrical power shall be limited to that voltage required for instruments. Use of higher voltage levels shall require Proteco approval.

5.6.2 Process instrumentation shall be supplied from a 120-volt or 240-volt (50 to 60 hertz) source, or as otherwise locally required. In a power failure, this instrumentation shall be automatically connected to a secondary source.

5.6.3 Control instruments for compressors, utilities, and packaged units required to operate during power interruptions shall be supplied from a 120-volt or 240-volt (50 to 60 hertz) source, or as otherwise locally required. There shall be provisions for automatically switching to a standby direct-current (d-c) battery source capable of sustaining the operation for a minimum of 30 minutes.

5.7 Interlock and Shutdown Systems

5.7.1 Interlock and shutdown systems shall be installed where required by applicable codes and specifications and as shown on the piping and instrument (P&I) drawings or as outlined in the Project Specifications.

5.7.2 Interlock and shutdown systems shall be designed to avoid trips caused by process transients or power dips of short duration. The exact duration of these transients and power dips shall be specified by Proteco, for example, a 10-second delay for low-flow trip on heaters and a 1-second delay on power dips.

5.7.3 The contractor shall be responsible for compatibility of all the elements of an interlock and shutdown system with each other and for conformance of the total system to the requirements of the project. They shall be designed to shut down de-energized with failure actions noted in Paragraph 5.2.

5.7.4 The contractor shall be responsible for application of the requirements of Paragraphs 5.7.1 and 5.7.2 to interlock systems provided with package units.

5.8 Instrument Grounding

5.8.1 All electronic instrumentation shall be grounded at a common single point separate from the plant ground grid. Where multiple grounds are required by local codes, these earthing points shall be separate from and not a part of the plant grid. When multiple grounds are required in an instrument wiring loop, intrinsically safe isolation amplifiers, optical isolation or galvanic transformers shall be used for loop coupling.

5.9 Control Room and Field Piping

5.9.1 Cable, conduit and tubing shall be routed in underground trenches. Where underground routing is not practicable, overhead cable and tubing shall be rounted in vertical cable racks. Vertical cable racks shall be routed and located in areas not vulnerable to fire exposure; routing shall not be over pumps, compressors, or adjacent to fired heaters. All such cable runs shall be fireproofed. Vertical runs minimize the exposure of cable runs to mechanical and fire damage. Where it can be demonstrated that vertical runs are mechanically impractical or uneconomical to install, horizontal runs may be installed subject to Proteco approval.

6. FLOW DIAGRAMS

Flow diagrams shall be prepared in accordance with the Project Specifications.

7. INSTRUMENT NUMBERING

7.1 Instruments shall be identified by letter and number as specified. Numbering sequences shall be in accordance with requirements of the plant of installation. The system shall be defined by the Project Specifications or by a separate document on the subject.

7.2 If a piece of equipment with an assigned number is deleted, the number shall also be deleted, but shall be carried on the number control list, shown as deleted and not be used again on that project. If two or more pieces of equipment are inadvertently assigned the same number, the number shall be deleted and each piece of equipment and the corresponding records shall be assigned a new number.

8. DRAWINGS

8.1 Instrument System Layout Drawings

8.1.1 Contractor shall furnish standard point and layout drawings. These drawings shall show the locations (elevations and line or vessel number) of all instruments except pressure gages and local thermometers. Pneumatic instruments and air lines shall be shown on one drawing or series of drawings. Electronic instruments and electrical wiring shall be shown on a separate drawing or series of drawings. Instrument equipment involving both pneumatic and electrical systems (such as electronic to pneumatic units and control valves) shall be shown on both drawings. Routing of the thermocouple leads shall be shown in elevation. All drawings shall have an alpha-numeric grid to allow for instrument cross-referencing and location. Where a series of drawings is used, the drawings shall have the same number with separate sheet numbers or letters. For multiple page drawings, appropriate match-marks between sheets shall be shown at the grids.

8.1.2 Layout drawings shall indicate instruments and auxiliaries requiring fire or weather protection.

8.1.3 Instrument air drawings shall show routing of the instrument air header, air branch supply leads, block valves and controlled and transmitted air lines.

8.2 Piping and Wiring Drawings

All drawings and diagrams corrected to "as built" configuration shall be available to Proteco operating personnel for unit check-out and start-up.

8.2.1 Hook-up Sketches

Contractor shall prepare three groups of hook-up sketches similar to those shown in API RP 550, Part 1, for instrument pressure piping and instrument air piping. All pressure and air piping shall appear on a single hook-up sketch. Electrical wiring shall be included where practicable. All sketches shall be submitted for Proteco approval prior to construction.

8.2.2 Wiring and Logic Diagrams

Interlock, shutdown and safety system wiring and logic diagrams shall be furnished. Wiring diagrams shall show all termination and cable identifications. All wiring and logic diagrams for these systems shall include block flow diagrams and a written description of the operation intended. Each sequence trip and alarm shall be described in detail. When unit control systems have a direct or ancillary effect, these effects shall be described and defined.

8.2.3 Loop drawings

Typical complete loop drawings and proposed formats shall be subject to Proteco approval. Contractor's standard may be used as a base, modified to reflect the project requirements. Contractor shall not proceed with loop drawings until Proteco concurs with the typical diagrams. Schematic drawings showing all terminations and cable identifcations shall be prepared for each complete instrument loop. Each loop drawing shall show and identify all items interconnected in an instrument signal circuit, including power supply terminals and computer terminations. Loop diagrams shall be large enough so that dense wiring interconnections are clearly shown. Interconnections between power supplies shall be shown on a separate schematic. These schematics are required for both pneumatic and the elctronic loops. Related wiring shall be referenced on the loop diagram. An ISA symbol depiction of the instrumentation loop shall also appear on the diagram.

9. PROCUREMENT DATA

9.1 Instrument Index

Contractor shall furnish a master instrument index. As a minimum, the index shall display a title line showing the revision number, date, area number (unit number), unit title, instrument function, and sheet number. For each instrument there shall be separate columns for:

a. Revision number
b. Area number
c. Instrument tag number
d. Pipe line number
e. Service
f. Location and size
g. P&I drawing number
h. P&I drawing coordinates
i. Requisition number
j. Purchase order number
k. Vendor identification
l. Process connection diagram number
m. Air connection diagram number
n. Electrical diagram number
o. Heat tracing diagram number
p. Piping drawing coordinates
q. Layout drawing coordinates
r. Vendor drawing number
s. Remarks

Computer programs and printouts shall be used where this is the contractor's standard method. The index shall be updated and submitted to Proteco according to the Project Specifications.

9.2 Procurement Status Report

The contractor shall furnish a procurement status report. As a minimum, the status report shall display a title line showing the revision number, date, area number (unit number), unit title, and page number. For the instruments there shall be separate columns for:

a. Instrument type and code
b. Total number of items
c. Number on requisition
d. Number on inquiry
e. Number of vendor inquiries approved
f. Number of purchase orders issued
g. Number of vendor-certified prints received
h. Number of spare parts lists received

A consolidated summary shall be included for the entire project. Computer programs and printout shall be used where this is the contractor's standard method. The status report shall be updated and submitted to Proteco according to the Project Specifications.

9.3 Vendor's Drawings and Data

Contractor shall furnish the required number of copies (as specified in the Project Specifications) of vendor's certified drawings; electrical circuit details; complete installation start-up and service instructions; complete and detailed field adjustment instructions; maintenance instructions; complete parts list with illustrations; and price list of recommended spare parts giving the flow sheet item number, catalog number, and serial or model number of each instrument a part will fit.

Contractor shall also furnish a cross-reference of vendor's instructions and spare parts lists. This may be included on the instrument master index.

10. CALCULATIONS

10.1 Contractor shall furnish Proteco calculations for orifice plates, control valves, traps, drainers, and relief valves as they are completed. These calculations shall be approved by Proteco before the equipment is purchased. Final plant data books shall have consolidated sections including all of these calculations.

10.2 All symbols used in the calculations shall be identified. References shall be quoted for the equations and methods of calibration used.

10.3 Sizing of control valves shall be based on the Masoneilan International, Inc., Control Valve Sizing Computer Program or the Fisher Valve Sizing/Noise Prediction Computer Program, whichever is contractor's base. Where sizing data appear incompatible, either the Masoneilan or the Fisher program may be used as a secondary reference.

10.4 The Shell Flow Meter Computer Program for sizing flow elements shall be used. This program is used for convenience and uniformity of approach. Contractors not using this program shall submit their calculations and calculation sheet format to Proteco for confirmation. Where a discrepancy occurs, a recognized standard applicable to location of installation shall be used to resolve it.

10.5 Noise calculations are required for all instrumentation devices which generate noise or contribute to the plant noise level.

11. FIELD TESTING AND CALIBRATION

11.1 General

11.1.1 Contractor shall demonstrate to Proteco satisfaction that all instruments and control equipment are adequately installed, properly connected, pressure tested, and fully operable.

11.1.2 Contractor shall be responsible for all field tests and calibration; shall provide the required test equipment which has been approved and certified; and shall furnish Proteco with calibration data sheet listing all instruments, the method of test, and the initial and final results. Test procedures require Proteco approval.

11.1.3 Pneumatic tubing shall be leak checked as required by ISA RP 7.1.

11.1.4 All tests and calibrations shall be subject to witness and approval by Proteco. Proteco shall be notified in sufficient time to schedule manpower for witness and approval.

11.2 Transmitters

Contractor shall test and loop calibrate the output signal from all transmitters to their respective receivers for zero, half-scale and full-scale, as a minimum requirement. External level instruments shall be filled with liquid to displace the actuating relay and satisfy the three-point

check. Calibration may be by artificial movement when other means are not practicable. Thermocouple and resistance bulb-type instruments shall be checked and calibrated against a portable standard potentiometer or check coil.

11.3 Transmission Systems

Transmission systems shall be calibrated in place. The transmitter reading, transmitted signal and receiver indicator or recorder shall be checked against measured variable or a simulation of same (such as dry calibration of a flow meter against a water column).

11.4 Control Systems

Controllers shall be checked to demonstrate that the control action is synchronized with valve movement and other related instrumentation as follows.

a. Controller input and output values shall be checked for agreement with manufacturer's calibration.

b. Controller and valve positioner output values shall be checked for proper coordination of controller output with valve opening direction.

c. Valve positioner output values and valve stroke shall be checked.

d. Control valve stroke length, diaphragm air pressure to stroke relation, and seating shall be checked. (Control valves shall be installed after line flushing is completed. Therefore, this test shall not be performed until the valve is permanently installed.)

e. Open/close tabs on controller output gage or meter shall be checked for agreement with control valve action.

f. Split-range systems actions shall be checked for agreement with P&I drawings.

11.5 Alarms and Interlocks

Alarm settings and interlock actions shall be checked for proper operation in the presence of Proteco's representative. All interconnecting wiring on electronic instruments shall be checked for continuity, grounding and shielding (if required) as shown on approved wiring diagrams.

12. TABS AND NAMEPLATES

An identification tag shall be attached to each piece of instrumentation equipment. Tags for field-mounted instruments other than recorders and controllers shall be of 16-gage U.S. Standard stainless steel (or equivalent) unless approval is given for the use of laminated plastic. Tags for recorders and controllers shall be laminated plastic. All field tags shall be attached by stainless steel 16-gauge wire or stainless steel drive screws. Tags on all instrument components other than controllers used in either a control or safety shutdown loop shall be triangular in shape. Minimum size shall be 38 mm by 38 mm by 38 mm (1 1/2 inches by 1 1/2 inches by 1 1/2 inches). The controller tag shall be used for each piece of instrumentation in other loops. Plastic tag strips shall be used in all junction boxes and behind control boards and shall be secured by metal fasteners, alpha cyanoacrylate adhesive or other means approved by Proteco. All lettering shall be at least 5 mm (3/16 inch) high. Nameplate color and nomenclature shall be submitted for Proteco approval.

13. ANALYZERS

13.1 Analyzers required by process as indicated on the P&I drawings, shall be tabulated by contractor. Additional analyzers deemed desirable shall be submitted to Proteco for consideration.

13.2 Analyzer installation shall generally be as outlined in API RP 550, Part II. Sample conditioning systems shall be furnished by the analyzer vendor. Where the vendor does not offer this service, he shall provide written concurrence with the contractor's sample conditioning system drawings.

13.3 Preferably, analyzer systems shall be assembled, tested, installed and commissioned by a specialized subcontractor to ensure an operating online analyzer system.

13.4 Approved intrinsically safe isolation amplifiers of the reformed signal type, galvanic transformers, or optical isolation shall be used with intrinsically safe or "non-incendive" systems where electronic recording or analyzer outputs may create an additional ground loop.

DIVISION IX
ELECTRICAL CONTROL AND INSTRUMENTATION

09020 FLOW INSTRUMENTATION

1. SCOPE

This specification covers basic requirements for the design, installation and testing of flow elements, metering runs, and meters.

2. REFERENCES

The following specifications and publications are referred to herein.

2.1 Instrumentation - General Requirements
Instrumentation - Seals, Purges, Winterizing, and Fire Protection
Piping

2.2 API (American Petroleum Institute) Publications:

RP 550 Manual on Installation of Refinery Instruments and Control Systems - Part I - Process Instrumentation and Control, Section 1, 1983.

Manual of Petroleum Measurement Standards:
Chapter 4, Proving Systems, 1978
Chapter 5.3, Turbine Meters, 1976

2.3 ASME (American Society of Mechanical Engineers)

Fluid Meters, Part Two, Chapter II-II - General Requirements for Fluid Metering: Installation, 1971

2.4 ISA (Instrument Society of America) Publication:

RP3.2 Flange Mounted Sharp Edged Orifice Plates for Flow Measurements, 1960 (reaffirmed 1978)

2.5 ISO (International Standards Organization) Standard:

5167 Measurement of Fluid Flow by Means of Orifice Plates, Nozzles, and Venturi Tubes Inserted in Circular Cross-Section Conduit Running Full, 1980.

2.6 The Foxboro Company, Foxboro, Mass.

L.K. Spink, "Principles and Practice of Flow Meter Engineering" (latest edition).

3. GENERAL

3.1 The references and requirements of Section 09011 apply to this specification.

4. ORIFICE PLATES AND OTHER FLOW ELEMENTS

4.1 Concentric orifice plates, as described in API RP 550, Part I, Section 1, Paragraph 1.3.1.1, shall normally be used as primary elements. As a minimum, Type 304 stainless steel orifice plates shall be provided. Where the nature of the fluid requires a higher grade of alloy or other material, it shall be consistent with the piping material specifications.

4.2 When higher accuracy is required, or lower accuracy is acceptable, or as required by special fluids, other metering devices shall be considered so that optimum systems are installed. For a description of other flow devices see API RP 550, Part I, Section 1, Paragraphs 1.3.1.3 through 1.3.4.

5. ORIFICE PLATE DESIGN

5.1 Orifice plates shall be sized to provide a reading between 6 and 8 on a 0- to 10-square-root scale when the flow is at its normal design rate. The beta ratio (orifice bore to pipe diameter) shall not be greater than 0.70 or less than 0.20.

5.2 The minimum orifice flange size shall be 50 mm (2 in.). When design conditions indicate that a 50 mm orifice flange is too large, special equipment such as integral orifice meters may be required.

5.3 Preferably, plates should be bored to the nearest 3 mm (1/8 in.) for bores 102 mm (4 in.) and smaller. For bores larger than 102 mm, plates should be bored to the nearest 6 mm (1/4 in.).

Subject to Proteco approval, plates may be bored for odd sizes to obtain even coefficients that are round-number multiplying factors. When the odd bores are used to obtain round-number multiplying factors, any change in operating conditions on which the flow calculations are based may result in an irregular multiplying factor.

5.4 Orifice calculations shall be based on <u>Principles and Practice of Flow Meter Engineering</u>, by L.K. Spink.

5.5 Orifice plate fabrication shall include requirements of API RP 550, Part I, Section 1, Figure 1.1, and ISA RP3.2. Weep holes shall not be supplied unless specified. For ring joint construction, the plate holder shall be a handle-type oval

ring of line specification material. All orifice plates shall have handles with the following information stamped on the upstream side.

(a) Orifice size (bore).
(b) Instrument number.
(c) Inside diameter (ID) of the pipe.
(d) Material symbol.

Letters shall be no less than 3 mm (1/8 in.) high and shall be legible when installed. Plates and holders shall be purchased from vendors approved by Proteco.

5.6 In order to facilitate verification that orifice plates are installed correctly, each handle shall have a notch cut from the left-hand corner as one looks from the upstream side of the orifice. The notch size shall be approximately 6 mm by 6 mm (1/4 in. by 1/4 in.)

6. METERING RUNS

6.1 Orifice flow measurement errors up to 10 percent, or more, can be attributed to:

(a) Flange misalignment.
(b) Pipe eccentricity.
(c) Pipe wall roughness.
(d) Pipe out of round.
(e) Unbored backing ring weld intrusions or welding bead penetrations.
(f) Meter run design.

To ensure proper fabrication, meter runs shall be purchased from a Proteco-approved shop fabricator. If the runs are galvanized, they should be galvanized centrifugally and not hot-dipped. Mated raised-face, welded-neck orifice flanges shall have a minimum rating of 300 psig and shall have two taps per flange; unused taps shall be plugged with solid plugs and back welded. Meter runs shall conform to the ASME publication Fluid Meters, Part Two, Paragraphs II-II-6 through II-II-10. Upstream and downstream pipe lengths shall be in accordance with ISO 5167, using a beta ratio of 0.70.

6.2 Fabrication of meter runs shall be done at the supplier's plant, and the runs shipped from there to the job site.

6.3 Meter runs shall be used for all continuous process flow applications. For some intermittent utility applications, where large measurement errors (±15 percent or more) are not important and the flow reading is simply an approximation, it may be acceptable not to use a prefabricated meter run. In such cases, straight pipe lengths upstream and downstream must meet the requirements of Paragraph 6.1 and Proteco approval is necessary.

6.4 If adherence to ISO 5167 at a 0.70 beta ratio causes severe cost penalties or impossible pipe/equipment arrangements, the following steps, in order of priority, shall be taken to resolve the problem:

(a) Apply the ISO 5167 tables at the actual beta ratio rather than 0.70.

(b) Use the alternate (bracketed) values in the ISO 5167 tables. These values produce an added uncertainty of ±0.5 percent to the measurement accuracy. For noncustody transfer applications this may be acceptable. The bracketed ISO 5167 table values are nearly identical with the tables in API RP 550, Part I, Section 1, and API Petroleum Measurement Standards, Chapter 14.3. Thus, for installations that have approval to accept the ±0.5 percent added uncertainty, it is acceptable to use the API tables for determination of meter run lengths.

(c) With Proteco approval, install straightening vanes.

(d) Install another type of flow measuring device - one that can produce the required accuracy with less straight pipe. If sufficient velocity exists, an elbow meter or an insertion-type pitot tube or turbine meter may be acceptable. (Refer to Paragraph 8.6 for alternate flow devices.)

6.5 Primary flow elements shall not be welded in line. Metering runs shall have welded-neck flanges on the downstream end to facilitate inspection of the ID unless it is otherwise specified or there is an existing piping flange conveniently located; refer to ASME publication Fluid Meters, Part II, Figure II-II-4. The upstream flange, as shown in the ASME figure, is optional. In required accounting services where interruption of flow for orifice inspection is not practical, chamber-type orifice fittings should be used.

6.6 Vertical meter runs shall not be used without prior Proteco approval.

7. INSTALLATION OF HORIZONTAL METERING RUNS

7.1 Bolt holes of all flanges shall straddle the vertical centerline of the assembled installed tube. When bolted together, the metering runs shall be straight.

7.2 Orifice flange taps shall be on vertical flange centerlines for top orifice meter connections and on horizontal flange centerlines for side orifice meter connections. Taps at 45 degrees above the horizontal for vapor service and at 45

degrees for liquid service are acceptable, subject to Proteco approval. When 45 degree taps save space in overhead pipe racks, they may be preferable.

7.3 Two 25 mm (1 in.) couplings shall be provided on the downstream section if pressure or temperature measurements are required and there are not other suitable taps available in the metering run system. These couplings shall be located on the top of the pipe and on vertical centerlines. The centerline of the first coupling shall be at least six pipe diameters from the face of the downstream orifice flange.

8. FLOWMETERS

8.1 Differential pressure instruments shall withstand differential pressures equal to full-line pressure without zero or calibration changes. Body materials shall be consistent with or exceed the piping material specification. No damage shall result if the full-line pressure is connected to the low-pressure side of the transmitter.

8.2 To ensure the highest obtainable accuracy of flow measurement, an on-line correction for changing gas density should be considered. If the flowing density remains stable - that is, with no change in molecular weight - on-line pressure and temperature compensation will be sufficient.

8.3 A differential pressure range of 100 in. of water, dry calibration, shall be used for liquid flowmeters, unless otherwise specified.

8.4 Bellows-type differential pressure meters shall be equipped with over-range checks and used for the following services:

(a) Local indicators or recorders.
(b) Transmitters for integrators only.
(c) Pulsating flow, where internal damping could be advantagous.

8.5 Differential pressure transmitters with a diaphragm of negligible displacement shall be used unless other types are specified. Mercury shall not be used. Unless transmitters are inaccessible or under severe vibrating conditions, they shall be close coupled to the orifice flow elements as shown in API RP 550, Part I, Section 1, Figure 1-11; however, dimensions shall be 450 mm (18 in.) maximum. Should severe vibrating conditions be anticipated, the meter may be mounted on vibration dampener supports or removed from the vibration source.

8.6 The following primary devices shall be considered, together with any other applicable primary element, when economic or special conditions (piping limitations, very close tolerances, high or lower accuracies requi4ed) dictate:

(a) Swirl meters
(b) Vortex meters.
(c) Turbine meters.
(d) Magnetic flowmeters.
(e) Target meters.
(f) Positive displacement meters.
(g) Ultrasonic meters.
(h) Thermal meters
(i) Annubars or pitot tubes.
(j) Rotameters.

For any of the above primary devices in continuous process service, provision shall be made for removal of any in-line flow measuring device without shutting down the process. The final decision shall be subject to Proteco approval.

8.7 Variable area meters (rotameters), low-range magnetic flowmeters, or integral orifice differential pressure transmitters may be used for very viscous fluids; where solids are present in the fluid; for extremely low flow rates - 0.13 liters/s (2 US gpm) for liquid, 1.4 liters/s (3 cfm) for gas; for purging service; or where a linear flow rate signal is used in control proportioning pumps. Rotameters shall be of the armored type, unless otherwise specified, and the body materials shall be consistent with the piping material specificaitons. The meter range shall, in general, be selected so that the normal flow rate reads approximately 50 on a 0-to-100 uniform scale.

9. FLOWMETER INSTALLATION

9.1 Installations shall be in accordance with API RP 550, Part I, Section 1.

Flowmeters shall be installed upstream of corresponding control valves. Any exceptions require Proteco approval.

9.2 Impulse piping runs to bellows-type meters shall not exceed 6 m (20 ft), with a minimum downward slope of 83 mm/m (1 in./ft). Type 316 stainless steel fittings and Type 304 or better seamless stainless steel annealed tubing shall be used. Diaphragm-type differential pressure transmitters shall be close coupled, except as noted in Paragraph 8.5. For typical. steam measurement isntallations, refer to Figures II-II-6 through II-II-9 of the ASME publication Fluid Meters, Part Two.

9.3 Local indicating or recording flowmeters used in conjunction with a hand control valve shall be installed so that the flow is easily readable from the control valve.

9.4 Seals require Proteco approval. When the seals are approved, the installation shall conform to the following:

(a) Seal chambers shall be used for bellows-type flowmeters used in wet gas service, or in corrosive, viscous, unstable, or freezing fluid services.

(b) Condensate chambers shall be used for bellows-type meters in steam services.

(c) Differential pressure meters of the diaphragm type can normally be sealed without using pots or chambers.

9.5 Purge systems of the constant flow type shall be provided when orifice or pressure tap plugging is expected.

9.6 Installation of the following types of meters shall conform to API RP 550, Part I, Section 1: variable area meters, magnetic flowmeters, and target meters.

9.7 Installation of turbine meters shall be in accordance with API Manual of Petroleum Measurement Standards, Chapter 5.3.

9.8 When a primary element that is not covered by a consensus standard (API, ASME) is specified, the manufacturer's installation instructions shall be used, subject to Proteco approval.

10. CRYOGENIC FLOW MEASUREMENT

10.1 Differential pressure transmitters in cryogenic applications [temperatures below -22°F (-30°C)] must be self-draining; that is, the transmitters shall be elevated above connection points. If this is not possible, a gas purge or light thermal insulation may be used with Proteco approval.

10.2 Vendor recommendations shall be obtained in writing when flow instruments such as turbine meters are used in cryogenic service.

11. TESTING AND CALIBRATION

11.1 Metering runs in conformance with section 6 do not need further calibration, provided the flow being measured remains within the bounds of the original design criteria. If the design flow is exceeded, recalibration is required. Low-flow systems that require metering runs of less than 50 mm (2 in.) in diameter require flow laboratory calibration.

DIVISION IX
ELECTRICAL CONTROL AND INSTRUMENTATION

09030 LIQUID LEVEL INSTRUMENTATION

1. SCOPE

This specification covers basic requirements for the design and installation of liquid level indicators and transmitters.

2. REFERENCES

The following specifications and publications are referred to herein.

2.1 Storage Tanks - Ground Reading Automatic Gage
Piping - Instruments
Instrumentation - General Requirements
Electrical - Lighting and Receptacle Installations

2.2 API (American Petroleum Institute) recommended practice:

RP 550 Manual on Installation of Refinery Instruments and Control Systems, Part I: "Process Instrumentation and Control," Section 2 - Level, third edition, 1974.

3. GENERAL

3.1 The references and requirements in 09011 apply to this specification.

3.2 Level controllers that regulate feedstreams to other processing vessels shall be cascade-type control loops. Each level controller shall be furnished with proportional control mode and high-low signal limiters. These limiters may be integral to, or separate from, the level controller. Figure 1 of this specification shall be used where precise level control is required and the flow cannot be shut off; Figure 2 shall be used where the volume of the vessel is used for surge capacity until level limits are reached.

3.4 Level controllers shall be furnished with proportional control mode only, except where precise level control is required; then the level controller shall be furnished with proportional plus reset control modes.

3.5 All local level controllers shall be of the receiver type and shall be yoke mounted at grade or on a permanent platform. They shall be furnished with auto-manual subpanels.

3.6 High-level alarm devices required for Class I liquid storage tanks shall be separate from other tank gaging devices. The high-level device selected, complete with specification sheets and installation details, shall have Proteco approval prior to purchase.

4. MODIFICATIONS TO API RP 550, PART I

Liquid level instruments shall conform to API RP 550, Part I, Section 2, except for the following modifications. The paragraph numbers refer to those cited in API RP 550.

Paragraph 2.2.2 (Modification)

The term "readable" shall be used in place of "visible."

Paragraph 2.2.3.1 (Addition)

Connections to the bottom of vessels or boots are not allowed without written approval by Proteco.

Paragraph 2.2.3.3 (Addition)

The minimum size of instrument connections allowed on vessels is 1 in. NPS (see EGE 12-B-1, Paragraph 4.10.1a).

Paragraph 2.2.4.1 (Addition)

"Tee" connections and standpipes shall not be used on boots of vessels.

Paragraph 2.2.8 (Addition)

Valves shall be installed at the highest points for venting connections.

Paragraph 2.3.2.2 (Addition)

Visible lengths of level glasses shall be equal to, or greater than, the span of the level instrument and any independently mounted alarm or shutdown switch associated with it.

Standard lengths for level gage glasses are as follows:

Number of Sections	Total Visible Length of Glass mm	in
1	321	12 5/8
2	679	26 3/4
3	1038	40 7/8
4	1397	55

If longer ranges are required, a combination of these level gages shall be used (see Paragraph 2.3.2.3).

Paragraph 2.3.2.3a (Addition)

When two or more gage columns are required to cover the level range, they shall be so installed that the visible lengths overlap by at least 25.4 mm (1 in.).

Standard gage cocks (with built-in velocity checks) shall be furnished for all services, except where the viscosity of the liquid precludes the use of the gage cocks. Gage cocks shall be the offset type with union bonnet, 19 mm (3/4 in.) male unions at valve seat and gage connections. The stem shall have handwheels and quick-closing threads, with a double-seated plunger to unseat the ball check before the cock is closed. The body shall be forged steel. Ball check, plunger seat and valve stem shall be Type 316 or 304 stainless steel. Drain connections shall be 1/2 in. NPT and shall be provided with a drain valve. Where necessary, higher-grade material shall be used.

Block valves shall be provided for all gage glass installations.

Paragraph 2.3.2.3b (Addition)

For interface service, gages shall be mounted directly on the vessel with the top connections always submerged. If more than one gage column is used, they shall be independently connected to the vessel.

Paragraph 2.3.2.6 (New Paragraph)

Level gage glasses shall be top and bottom connected. The following minimum ratings shall be used for gage glasses and gage cocks:

	Rating					
AT:	40°C kPa, gage	100°F psig	400°C kPa, gage	750°F psig	540°C kPa, gage	1000 F psig
Reflex glasses	10,300	1,500	6,200	900		
Transparent glasses	5,900	850	3,400	500		
Tubular glasses	2,100	300				
Gage cocks	10,300	1,500			3,400	500

Paragraph 2.3.3.1 (Addition)

Float-and-cable tank gages shall not be used as part of a tank high-level alarm system.

Paragraph 2.3.3.15 (New Paragraph)

Tank gages shall be constructed so that remote transmission of liquid level can be added without emptying the tank or making major changes in the original equipment.

Paragraph 2.4.1.1 (Addition)

Displacer instruments shall be furnished with rotatable head construction.

Paragraph 2.4.1.2e (New Paragraph)

External displacer type of liquid level instruments shall be used in all services, except the following: those in which the level range exceeds 1829 mm (72 in.); cryogenic, liquefied gas and refrigerant services; or those in which other types of level instruments are more suitable.

Paragraph 2.4.1.4 (Modification)

Connections shall be 2 in. NPS, minimum ANSI Class 300 flanges located top-side and bottom-bottom.

Paragraph 2.4.2 (Addition)

Differential pressure transmitters shall be used in all services in which the level range exceeds 1829 mm (72 in.); in cryogenic, liquefied gas and refrigerant services; or where other types of level instruments would not be suitable.

Paragraph 2.4.2.1f (Addition)

For vessels that contain viscous materials, consideration shall be given to flange-mounted differential pressure cells. On vessels containing slurries or waxy oils, the extended-diaphram type (diaphragm flush with the inside wall of the vessel) shall be used. In both cases, the cell shall be connected directly to the vessel without an isolation valve. Where temperature limitations preclude the use of diaphgram-type units, other suitable types shall be used. Provision shall be made for purging.

Paragraph 2.4.2.1g (New Paragraph)

Differential pressure transmitters installed in liquids that tend to boil at ambient temperatures shall be located above the vessel taps. Certain applications may require that the transmitter be mounted below the vessel taps and the legs to taps be sealed with a liquid heavier than the liquid in the vessel.

Paragraph 2.5.3.1 (Addition)

Ball-float controllers, either for pilot operation or mechanical operation of control valves and signals, shall be used only for services described in this paragraph or for nonprocess services. Control valves mechanically operated by a float shall have a double port and rotary stem and be no larger than 3 in. NPS. Larger valves shall be pilot-operated, diaphragm motor control valves.

Paragraph 2.7 (Addition)

Shutdown actuators shall be mounted on nozzles dedicated for their use only. Flanged-body level devices (see Figure 2-13) shall be used in the aforementioned services to permit access to the float or displacer. Vents and drains shall be provided on the alarm switch side of the arrangement; ball checks on the drain and gage glass vents make draining of level switches difficult. Switches shall be installed so that their operation may be checked in the original position.

Electrode units shall be used for primary high- and low-level safety shutdown on nonhydrocarbon services. Where not demanded by a code, other types may be installed with Proteco approval.

DIVISION IX
ELECTRICAL CONTROL AND INSTRUMENTATION

09040 TEMPERATURE INSTRUMENTATION

1. SCOPE

This specification covers basic requirements for the design, installation, and testing of temperature instruments.

2. REFERENCES

The following specifications and publications are referred to herein:

2.1 Piping - Instruments
Instrumentation - General Requirements
Wiring for Instruments and Computers

2.2 API (American Petroleum Institute) publication:

RP 550 - Manual on Installation of Refinery Instruments and Control Systems, Part I: Process Instrumentation and Control, Section 3 - Temperature, 1965.

2.3 ANSI (American National Standards Institute) publication:

Std C96.1 - 1964 - Temperature Measurement Thermocouples

2.4 ASME (American Society of Mechanical Engineers) publication:

PTC 19.3 - 1961 - Power Test Code, Part 3: Instruments and Apparatus Temperature Measurement

3. GENERAL

The references and requirements in 09011 shall apply to this specification.

4. MODIFICATIONS TO API RP 550, PART I

The remainder of this specification consists of amendments to API RP 550. The paragraph numbers refer to those in API RP 550, Section 3.

<u>Paragraph 2.3c (Addition)</u>

Thermowells shall be suitable for stresses due to stream velocity conditions. The wake frequency (commonly referred to as "Strouhal" or as "Von Karman Trail") shall not exceed 80 percent of the natural frequency of the thermowell. Acceptable calculation methods are:

a. ASME PTC 19.3.
b. Contractor's equivalent method, subject to Proteco approval.

Paragraph 3.2e (Purchaser's Choice)

Thermowell connections into equipment shall be in accordance with the applicable equipment specification. Typical thermowell designs are shown in Figures 1 and 2 herein.

With the exception of wells for bulb-type elements, protective wells and test wells shall be bored to receive bimetallic, thermocouple or resistance-type primary elements. All thermowells shall be drilled barstock.

Standard thermowell material shall be Type 304 stainless steel. Other materials shall be used as required by process conditions.

Paragraph 3.2f (Addition)

Where practicable, thermowells in combining streams shall be located a minimum of 10 pipe diameters downstream of the junction for liquid services and 30 pipe diameters downstream for vapor services.

Paragraph 3.3c (Modification)

Dial thermometers with 125 mm (5-inch) adjustable angle dials and weatherproof cases shall be used unless otherwise specified. These thermometers shall be installed in separable thermowells.

If necessary for operating visibility, or in vibrating service, a dial thermometer with filled thermal system of sufficient capillary tubing length shall be used.

Paragraph 3.5a (Purchaser's Choice)

Liquid tight PVC jacketed flexible steel conduits or armored flexible cable shall be used. These are as shown in the bottom portion of Figure 3-8 of API RP 550.

Other types of connections, such as shown in Figure 3 herein, may be used subject to Proteco approval.

Thermocouple heads in control applications shall be painted red.

Paragraph 3.5b.2 (Modification)

All API RP 550 references to ISA RP I shall be changed to ANSI Std. C96.1-1964.

Paragraph 3.5b.3 reference to Figure 3-10 (Modification)

Thermocouples shall be of the two-wire type with terminal blocks enclosed in a weatherproof head having a female-threaded gasketed cover.

Spare wires shall be terminated on terminal strips at each end and adequately identified as spares on the strips and on wiring diagrams and summaries.

Paragraph 3.5e (Modification)

Temperature controllers shall use dedicated primary elements. A separate thermowell with thermocouple connected to the multipoint temperature indicator shall be furnished for checking all control applications.

If two or more primary elements are required at the same location, they shall be installed in separate thermowells no more than 150 mm (6 inches) apart.

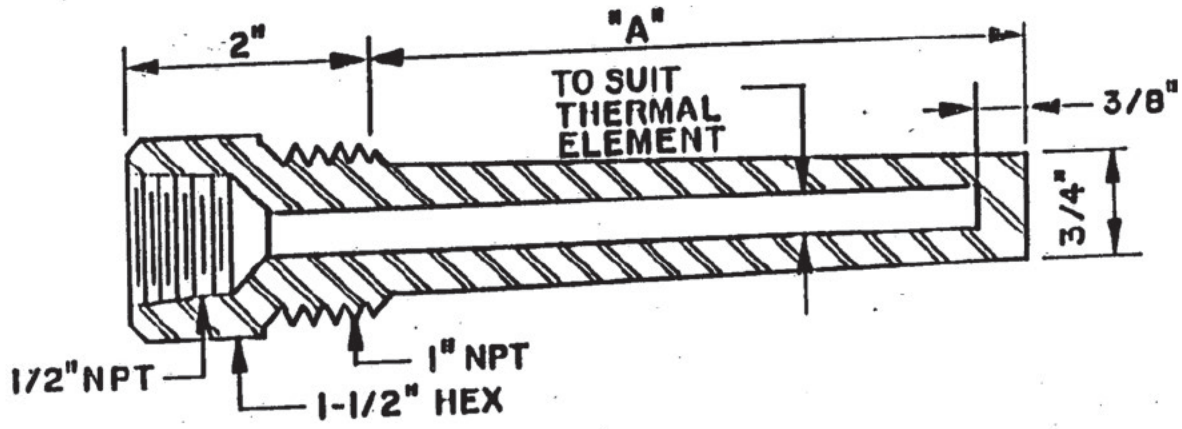

TYPE A

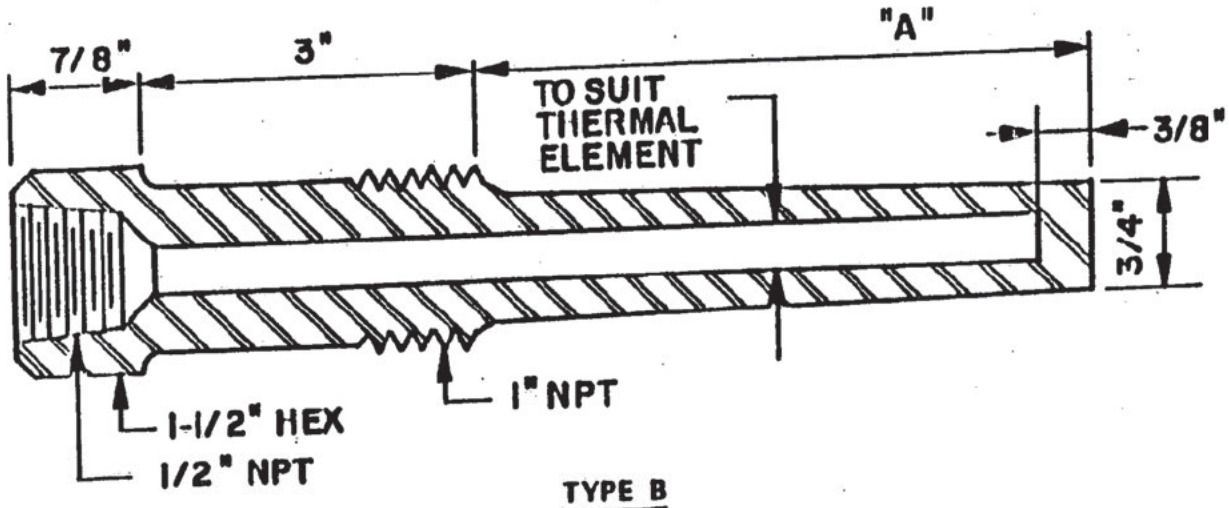

TYPE B

Line Size (Inches)	Dimension "A" (Inches)		
	Screwed Connection	Flanged Connection	
		150 Lb to 600 Lb	900 Lb to 2500 Lb
3	3½	10	12
4	3½	10	12
6	6	12	12
8	6	12	15
10	8	12	15
12	8	15	15
14	8	15	18
16	10	15	18
18 & over	12	18	18
Vessels	To Suit	To Suit	To Suit

NOTES:

1. For nozzle and screwed reducing flange connections, use Type A.
2. For coupling or elbolet connections, use Type B.
3. For test thermowells, use plug and chain.

FIGURE 1
TYPICAL THREADED THERMOWELLS

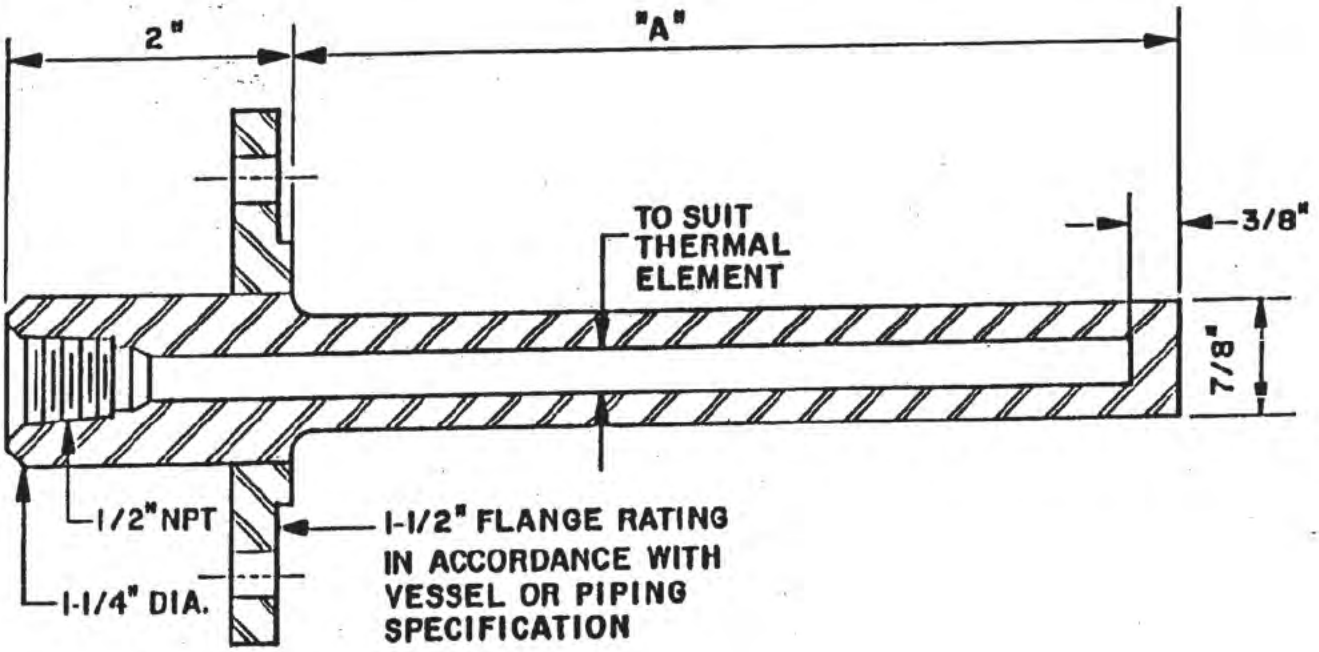

Line Size (Inches)	Dimension "A" (Inches)	
	150 Lb to 600 Lb	900 Lb to 2500 Lb
3	8	10
4	8	10
6	8	10
8	10	12
10	10	12
12	10	12
14	12	12
16	12	15
18 & over	12	15
Vessels	To Suit	To Suit

NOTE:

For test thermowells, use plug and chain.

FIGURE 2
TYPICAL FLANGED THERMOWELL

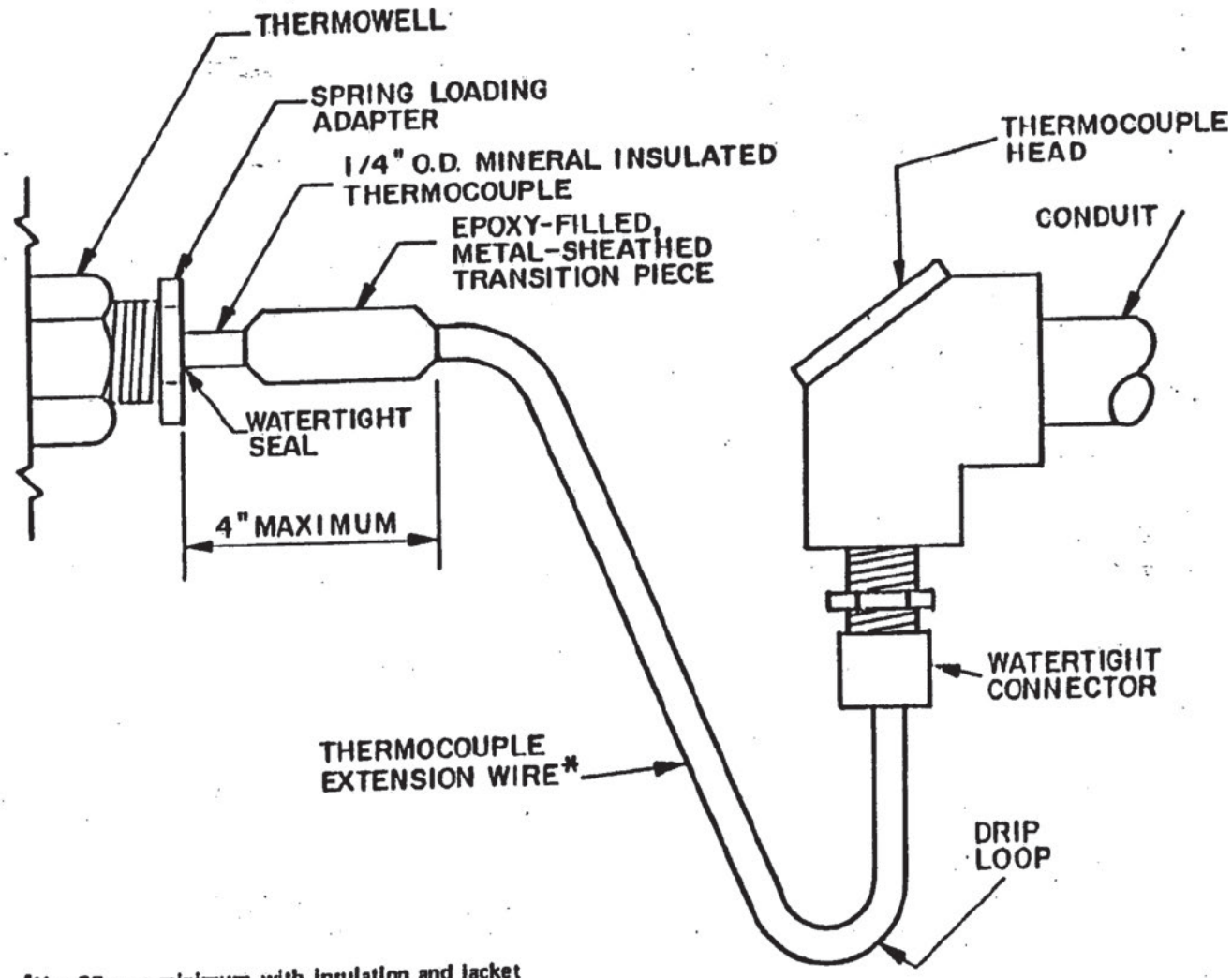

*Use 20-gage minimum with insulation and jacket suitable for each application and environment. Overall PVC jacket should be 3 feet maximum and ISA color-coded.

FIGURE 3

THERMOCOUPLE INSTALLATION

DIVISION IX
ELECTRICAL CONTROL AND INSTRUMENTATION

09050 INSTRUMENTATION - CONTROL VALVES

1. SCOPE

This specification covers minimum mandatory requirements for the design, sizing, installation, and application of control valves.

2. REFERENCES

The following specifications and publications are referred to herein:

Piping - Instrument Connections

Instrumentation - General Requirements

API (American Petroleum Institute) publications:

RP 550 Manual on Installation of Refinery Instruments and Control Systems, Part I, Section 6: Control Valves and Accessories, 1976.

Std 617 Centrifugal Compressors for General Refinery Services, 1973.

FCI (Fluid Controls Institute) standards:

Std 62-1 Standard Formulas for Sizing Control Valves

Std 70-2 Quality Control Standard for Control Valve Seat Leakage

ISA (Instrument Society of America) publications:

S39.1 Control Valve Sizing Equations for Incompressible Fluids, 1972.

S39.3 Control Valve Sizing Equations for Compressible Fluids, 1973

ISA Handbook of Control Valves, 1976

NEMA (National Electrical Manufacturers Association) standard:

MG 1 Motors and Generators, Section 1, Paragraph MG 1-1.65: Classification of Insulation Systems, 1978.

3. GENERAL

The references and requirements in 09010 apply to this specification. The vendor's computer program shall be used for sizing standard valves after the program has been approved by Proteco. The vendor's manual shall be used for sizing special valves. All special-valve sizing requires specific approval by Proteco. When instances are not clearly covered, the proposed solutions shall be submitted to Proteco. In all cases, ISA S39.1 and S39.3 shall be the basis for the resolution of conflicts.

3.1 Acceptance Criteria

3.1.1 When shop or field inspections are conducted, the Proteco inspector shall choose valves at random over the entire production run and shall check all items or any parts thereof, or shall request all tests or any portion thereof. The checklist for control valves given in the Appendix shall be completed for each valve inspected and shall become part of the inspection documents.

3.1.2 All safety shutoff valves and valves for tight shutoff service shall be tested for maximum seat leakage in addition to the requirements of the Appendix. An acceptable test procedure is outlined in FCI Std 70-2. Single-seated valves for safety shutoff service shall meet Class I requirements: 0.0005 cm^3/min/in. NPS (nominal pipe size) maximum. Single-seated valves in other tight shutoff services shall meet Class II requirements: 0.01 percent of rated valve capacity maximum. Double-seated valves shall not be used.

3.2 Definitions

<u>Maximum Process Flow Rate (Maximum Design Rate)</u> - The extreme flow rate that may be required to sustain the process with changes in yields or feeds.

<u>Operating Flow Rate</u> - The operating rate of flow calculated to keep the unit in balance at material balance conditions as shown on the process flow sheet.

<u>Pump Rated Flow</u> - The maximum process flow rate multiplied by the pump wear factor, pumping curve error factor, and/or other factors as are designated for the application.

4. DESIGN BASIS

4.1 Valve Plug Characteristics

4.1.1. A system dynamic analysis is necessary for selection of the optimum valve plug characteristics. Normally, this rigorous analysis is required only for special services. When

analysis is required, valve plug characteristics shall be shown on the P&IDs or noted in the Project Specifications. Unless such an analysis is required, valve plug characteristics shall be selected as follows:

(a) Valve plugs with equal percentage characteristics shall be used except as noted in Items (b), (c), and (d).

(b) Valve plugs with linear characteristics shall be used for linear flow control systems or liquid level applications when either have relatively constant pressure drops. When valve plugs with linear characteristics are used, the pressure drop available to the control valve shall be at least twice the sum of all other friction losses in the system at the maximum flow rate.

(c) Gas compressor recycle valves shall have linear characteristics.

(d) Valve plugs with square root, hyperbolic, or other special characteristics shall be used to satisfy the demands of process requirements or system hydraulics, or both, to maintain relative stability of the control loop as the process throughput rate changes. For characteristic curves, refer to the ISA Handbook of Control Valves, Chapter 4.

4.1.2 Where the calculated control valve body size is two or more sizes smaller than line size, a valve body one size smaller than line size with reduced inner valve trim shall be used. Smaller body sizes may be used, subject to Proteco approval, where availability of reduced trim is limited.

4.2 Valve Turndown

4.2.1 The following applies to conventional globe, split-body, and S valves (double or single seated): When the required normal flow rates through a valve vary by more than 8 to 1 - or the associated process condition would cause more than 90 percent (or less than 10 percent) of its rated capacity index (C_v) to be utilized - two control valves shall be provided in parallel. One valve shall be sized for the low flow rate as outlined herein, and the two-valve combination shall be sized for the high flow rate. This requirement applies to control valves having a published range of 25 to 1 or better at constant pressure drop.

4.2.2 High recovery valves, such as cage trim or ball valves, may be used to expand the 8 to 1 requirement. However, no more than 90 percent (no less than 10 percent) of the rated C_v shall be utilized. Such applications require Proteco approval.

4.3 Depressuring Valves

Control valves for depressuring to vent lines shall be sized to prevent an overload situation. A fixed flow rate shall be maintained with a decreasing upstream pressure and a constant valve stem movement. After a safe pressure level has been reached, the flow rate may decrease, but in no case shall there be an increase in this rate.

5. VALVE SELECTION

5.1 Valve Size

5.1.1 Standard sizing shall be for 200 percent of operating flow except as specified herein. Where the maximum flow is more than twice the operating flow, the valve shall be sized for 110 percent of maximum flow.

5.1.2 Flow limiting shall not be part of control valve sizing. Where excessive flow could be hazardous, circuit elements other than control valves - such as restriction orifices, car-sealed characterized block valves, or piping - shall be used to limit flow. Programmed flow control valves are exceptions, as in Paragraph 4.3.

5.1.3 Control valves in feedwater service to hot-water or steam generators shall be sized on the basis of the maximum continuous rating (MCR) of the generator plus the design continuous blowdown rate. Maximum downstream pressure shall be the generator design pressure or the maximum drum safety valve setting, whichever is higher. Control valve allocated pressure drop shall be in accordance with Paragraph 5.1.6(a). The ratio of calculated C_v to actual C_v of the valve (C_v calculated/C_v actual) shall be as close to 0.98 as practical. Topworks shall be sized in accordance with API RP 550, Paragraph 6.7.2, as modified herein.

5.1.4 Control valves in compressor lines shall be sized on the basis of 90 percent of their rated C_v at that point on the capacity limit curve as indicated in Figure 1; see point E.

The pressure drop allocated to a control valve in the suction or discharge line of a centrifugal compressor should be 5 percent of the suction absolute pressure, or 50 percent of the system dynamic losses (exclusive of the control valve) at the compressor rated point, whichever is larger.

5.1.5 Control valves in pumped circuits shall be chosen so that a pump rated flow:

(a) Control valve pressure drop shall be 33 1/3 percent of all other friction losses in the system, at the maximum process flow rate excluding control valve, or 100 kPa (15 psi), whichever is greater (see Figure 2). This pressure drop allocation shall not include any pressure recovery of the control valve.

Limitations of these criteria are flow rates up to 50 dm^3/s (70 US gpm) and instances where the pump differential pressure is less than 1000 kPa (150 psi), not including the control valve drop. They are also valid for flow rates up to 19 dm^3/s (300 US gpm) if the pump differential pressure falls between 1000 kPa and 1900 kPa (275 psi). When conditions outside these ranges are encountered, the allocated pressure drop for the control valve may be reduced to 25 percent of the system dynamic losses at pump rated flow, or 100 kPa (15 psi), whichever is greater.

(b) No more than 90 percent of the valve's rated C_v shall be used for pump rated flow. No less than 10 percent of the valve's rated C_v shall be utilized for bypass or pump cooling requirements.

(c) In throttling service, butterfly control valves shall have a 100 percent C_v, with a 60-degree opening under maximum flow conditions. Special design disks allowing full control at higher angles of opening are acceptable; however, they shall conform to the calculation requirements noted in this Section and shall be subject to Proteco approval.

5.2 Sizing Methods

5.2.1 Valves shall be sized using the selected vendor's methods for 100 percent of capacity. These methods shall agree with ISA S39.1 and S39.3. For capacity index, C_s (steam), C_g (gas), or C_v (both) may be used as applicable; for intermediate capacity indexes or stem position, or both, the vendors published tables or test curves may be used. If the selected vendor has no published tables or test curve of intermediate positions, data or curve of an equivalent vendor may be referenced, provided the competitor's valve is completely identified. If no competitor manufactures an equivalent valve, the vendor shall be required to furnish a table or test curve showing capacity index versus stem position for

the 0, 10, 50, 70, 90, and 100 percent capacity index points. The selected vendor's valves with the same capacity index ratings, as noted herein, shall be used.

5.2.2 The capacity index C_v shall be used for non-compressible fluid flow. The capacity index C_s may be used for steam; C_g, for other compressible fluids (gases); or C_v for both. Where C_v is used for steam or compressible fluids, the formula to obtain C_v shall be shown on each data sheet or calculation sheet, or on both. This is necessary because valves having the same published C_v but with different configurations can have noticeably different flow rates for the same pressure conditions when passing compressible fluids. Modifying factors may be necessary to bring the index into reasonable agreement with actual test flows. The correction factors for each service and valve configuration shall be shown on the calculation sheet or data sheet, or on both. For valve configurations used with noncompressible fluids not covered in tables or for which there are no available test curves, complete documentation, including reference papers, shall be furnished.

5.2.3 The critical pressure ratio, P_c/P_1, shall not be assumed to be 0.50; API publications or other recognized handbooks should be used to obtain the correct ratio.

5.2.4 Special or proprietary design valves, or both, shall be sized in accordance with the manufacturers' formulas. These calculations, formulas, and symbols are subject to Proteco approval. Intermediate capacity indexes or stem position data, or both, shall meet the requirements of Paragraphs 5.2.1 and 5.2.2.

5.2.5 Proprietary computer programs for valve sizing are acceptable, provided detailed printouts containing original data, calculated results, and formulas are submitted to Proteco for approval.

5.3 Cavitation, Flashing, and Two-Phase Flow

5.3.1 Where it is obvious that cavitation or flashing will occur, and ISA S39.1 and S39.3 do not apply, the sizing method used shall be fully documented for approval by Proteco.

5.3.2 Control valve size in gas/liquid two-phase flow shall be determined by the equivalent area method; that is, calculate C_v for gas and liquid flow separately. Select nominal valve sizes for 200 percent of design flows. Add equivalent valve areas for two-phase flow valve sizes.

The equivalent C_v method shall not be used.

5.4 Normal Operations

In normal valve-sizing operations where pressure conditions for valves have already been fixed, and where it cannot positively be determined by inspection that cavitation or flashing will not occur, the choked flow equation shall be used; see ISA S39.3.

5.5 Capacity and Calculation

5.5.1 When a valve is installed between adjacent reducers, a correction factor shall be included in the basic valve calculation for both noncritical and choked flow. The manufacturer's recovery coefficients shall be used; see also ISA Handbook of Control Valves, Chapter 6.

5.5.2 For high-capacity, high-recovery control valves, the installed valve C_v shall not exceed the value of the inner port diameter (in inches NPS) squared, D^2, by more than a factor of 30; that is C_v 30 d^2. High-capacity valves shall not be used in piping systems longer than 600 m (2000 ft); see ISA Handbook of Control Valves, Chapter 6.

5.6 Other Circuits

5.6.1 For fluids flowing from one piece of equipment to another at lower pressure, the pressure drop allotted to the control valve shall be as specified in Paragraph 5.6.2 or 10 percent of the lower terminal pressure, whichever is greater.

5.6.2 All control valves in services not specified herein shall be sized for a flow rate of twice the operating flow rate (Paragraph 5.1.1). Where the maximum flow rate is more than twice the operating flow rate, the maximum flow rate times 1.10 shall be used. For sizing, the design differential pressure (dP) shall be 50 percent of the system friction drop exclusive of the control valve at the maximum flow rate.

5.6.3 In specific applications where twice the operating flow rate could be hazardous, the maximum flow rate should be set by equipment design considerations; for example, where twice the operating flow rate might result in too great a heat flux in a furnace.

5.7 Approval Required

Proteco approval shall be required, except as noted in Paragraphs 5.1.6 and 5.6.2, for the use of control valves with available pressure drop of:

(a) Less than 10 percent of the upstream absolute pressure.

(b) Less than one-half the sum of all other friction losses in the system, excluding the control valve.

(c) Less than 100kPa (15 psi) minimum in low-pressure liquid systems [less than 690 kPa (100 psi)].

(d) Less than outlined in this specification for valves in diverting service.

5.8 Sizing Data

Valve sizing data (including process flow rate used, the system friction losses at maximum flow rate exclusive of the valve, the sizing pressure drop across the valve, pump sizing calculations, pump and system curves) shall be submitted for Proteco approval prior to the purchase of control valves. The data submitted shall include formulas, definitions of terms, and the base conditions used for the calculations.

6. MISCELLANEOUS

6.1 Data plates shall be rigidly attached to all control valves. The preferred method of attachment is by riveting a plate to the operator yoke. The following information shall be shown on the nameplate:

(a) Valve assembly model number.
(b) Valve serial number
(c) Body rating.
(d) Maximum flow capacity, C_v.
(e) Body size.
(f) Plug type: linear, quick opening, square root, etc.
(g) Port size, or inner valve size if different from port size.
(h) Action, air to open or air to close.
(i) Body material
(j) Trim material
(k) Bench calibration of operator stroking range, in kilopascals, gage or pounds per square inch, gage.

6.2 Name tags shall be made of stainless steel and wired to the valve with stainless steel wire. Name tags shall identify valves as shown on P&IDs. Name tags shall be used even when an instrument tag number is shown on a valve data plate.

6.3 Flow directions shall be clearly indicated by an arrow on the body as part of casting or by a permanently attached, stainless steel plate.

7. MODIFICATIONS TO API RP 550, PART I, SECTION 6

Paragraph 6.3.2 (Addition and Modification)

Valve trim shall be Type 316 stainless steel unless process condition requires a higher grade or special materials. Valve trim includes plug, seat rings, valve plug stem, stem lock pin, packing spring, lantern ring or spacer, and packing follower.

Valve springs shall be carbon steel with factory rust-resistant coating.

Bolting for valve bonnets shall be stainless steel in service temperatures of less than 0_oC (32_oF).

Guide bushings and packing box ring shall be 17-4 precipitation hardened (PH) stainless steel or higher-grade materials if required by process conditions.

Stellite trim shall be used for flashing liquids, fluids containing solids, valve pressure drops exceeding 700 kPa (100 psi), and services above 310°C (600°F) unless higher-grade materials are required.

Paragraph 6.3.3 (Addition)

Body pressure rating shall be equal to, or greater than, the piping specification.

Paragraph 6.3.4 (Addition)

Flange connections shall be used for all body sizes larger than 1 in. NPS.

Minimum flange rating shall be ANSI Class 300.

Control valves with 1 1/4, 2 1/2, 3 1/2, or 5 in. NPS Connections shall not be used.

Threaded connections shall be internally tapered threads.

Paragraph 6.3.5 (Addition)

Packing box material shall be TFE impregnated, braided acrylic for services up to 230°C (450°F). Above 230°C, packing shall be reinforced Grafoil. Teflon V-ring packing may be used with Proteco approval.

Control valve packing glands shall be the bolted type, except in sizes 1 in. NPS and smaller. Packing follower and packing gland bolts shall be stainless steel in sweating or cold [less than 0°C (32°F)] service.

Lubricators and steel isolating valves shall be provided for all control valves with packing other than TFE acrylic and Grafoil. Lubricators shall be charged with suitable lubricant, and a spare box of refills shall be provided with each valve.

Paragraph 6.3.6 (Modification)

Single-seated control valves with springless topworks and double-acting pistons may be used for tight shutoff and where extra power is required to overcome unbalanced forces caused by process operating pressure and shutoff pressure.

Single-seated control valves, or other types whose test results indicated equal or better shutoff characteristics, shall be used when tight shutoff is desired. Composition seats for shutoff valves may be used when they conform to the pressure, temperature, and chemical limitations of the process.

Paragraph 6.4.1 (Addition)

On conventional applications, new designs may be used, with Proteco approval, where experience has shown that they are as serviceable as the standard globe valves. New designs include the cam-type valve, cage trim valve, low-torque rotary ball valve, and quick-change trim (top or bottom) valve.

Paragraph 6.4.2 (Modification)

Single-seated valves with a Stellite knife-edge plug and soft metal seat ring, or alternatively tight shut-off ball valves, shall be used on steam supply to equipment that is normally not in service; for example, emergency electrical generators or standby pumps.

Bottom-guided control valves shall not be used in solid bearing service. Deposits can form in the base of the valve body and prevent the valve from opening or closing fully.

When tight shutoff is not required, single-seated valves shall not be used if oversized topworks are necessary to overcome an unbalanced pressure drop. Double-seated, cage trim, or other balanced valves shall be used.

Skirt-guided plugs shall not be used, except that sizes 1 1/2 in. NPS and smaller in low differential pressure service may be submitted to Proteco for approval.

Cage-guided plugs may be used, as this type of plug is not considered skirt guided.

Paragraph 6.4.3 (Addition)

Heavy pattern design butterfly valves shall be used.

Wafer attachment shall be by double pinning to a solid shaft.

Shaft bearing shall be external, and shaft seals shall be packing glands.

Shear safety factory shall be 2 to 1 at maximum shutoff pressure across valve. The limiting value shall be taken at the weakest point, such as pins or keyways.

Butterfly valves that have been modified by having holes cut in the wafers or disks shall not be used. Control characteristics of such valves cannot be predicted.

Paragraph 6.4.7 (Modification)

Saunders and chemical pinch valves, or low-torque rotary ball valves with appropriately shaped cutout, may be used in slurry service and selected chemical services.

Paragraph 6.4.9 (Modification)

Self-actuated pressure regulators may be used for services where a variation of ±10 percent of the set pressure is not objectionable.

Pilot-operated regulators, rather than self-actuated pressure regulators, shall be used where accurate control is required. Pilots shall not be yoke mounted, unless specifically approved by Proteco. The controller output signal shall be indicated on the pilot.

Paragraph 6.6.1 (Addition)

A minimum of ten pipe diameters shall be provided upstream and downstream of a valve with noise-reduction trim before turns (elbows) or obstructions (check valves, strainers, etc.).

Paragraph 6.7.2 (Modification)

Valve position indicators shall be supplied on all valves. Two-way valves shall indicate position on a graduated scale with the words "open" and "shut" marked at the travel limits. Three-way valves shall indicate stem travel without the words "open" and "shut."

Rotary valves shall indicate valve position on a rotary scale around the shaft. Stem and shaft linkage shall be adjustable, with positive locking.

Actuator sizing shall permit full valve stroking against the maximum process differential pressure and spring tension with a 20 kPa to 100kPa (3 psi to 15 psi) air signal to the actuator diaphragm. Where 20 kPa to 100 kPa stroking of the valve is impractical and uneconomic, pneumatic multipliers may be used with Proteco approval.

The valve actuator shall be sized to develope a thrust sufficient to overcome the unbalanced forces acting on the valve plug and stem when the greatest differential pressure experienced in the system is across the valve. To this thrust must be added, or subtracted, the valve spring pressure, depending on the direction of the spring force. In addition to these forces, allowance shall be made for hysteresis in the movement of the valve components and the weight of the moving parts. Loading relays shall not be used to increase stem force in lieu of larger topworks. Any combination of loading relay and topwork requires Proteco approval. The valve vendor's standard method for actuator sizing may be used. Sample calculations shall be submitted to Proteco for approval. The cold bench set of the valve spring shall not vary by more than 10 percent from the spring range requirement for operating pressure.

Pneumatic diaphragm actuators shall be the normal mechanism for operating control valves. Piston operators shall be used only where stroke length or thrust required exceeds that available from diaphragm actuators.

Hand control valves shall have the same characteristics as motor-actuated valves. Valve position indicators shall be furnished.

Paragraph 6.8.2 (Addition)

Cooling fins shall be provided for control valves operating at 175°C (350°F) or higher in steam service, and 205°C (400°F) or higher in other services.

Warming spools shall be provided for control valves operating at -18°C (°F) or lower. Special extension bonnets shall be used for cryogenic services.

Paragraph 6.8.3 (Modification)

Unbalanced control valves shall have positioners, except in on-off service, or where system analysis clearly indicates a positioner is not required, or with the approval of Proteco.

Installation and adjustment of positioners shall be done at the control valve manufacturer's factory. Connecting tubing and fittings shall be in accordance with API RP 550, Section 7.

Pressure gages on positioners shall indicate supply pressure, control pressure, and positioner output. Gage construction shall be steel case with corrosion-resistant paint, brass movement, brass wetted parts, glass window, and dual [metric (SI)/customary] scale.

Bypass valves shall be an integral part of all positioners. The bypass mode shall permit servicing of the positioner without taking the valve out of automatic service.

Electropneumatic positioners shall not be used without specific approval.

Direct or reverse action shall be attainable on all positioners with simple field adjustments. However, direct action by positioners is the preferred installation.

Positioner loop gain shall be greater than 50 and not more than 100.

Springless actuators and push-pull pistons shall use positioners.

Fast split-range control loops, such as flow and liquid pressure, shall not use positioners. Pneumatic relays shall be used to enable close field adjustment of valve action.

Paragraph 6.8.6 (Addition)

Pneumatic booster relays shall be used where transmission lag affects controllability. All pneumatic transmission distances greater than 46 m (150 ft) shall be analyzed for transmission lag effect on the particular control response required.

Paragraph 6.8.7 (Addition)

Solenoid valve coils shall use Class F insulation as a minimum in all services and Class H insulation in all emergency shutdown services. See NEMA MG 1-1.65 for insulation classification.

Paragraph 6.9.1 (Modification)

Control valves shall be equipped with an auxiliary method of bypassing or manually operating the valve, except where safety shutoff valves are provided or where a safety hazard may be created.

Blocks and bypasses shall be used around all control valves in lines of 2 in. NPS and smaller.

Control valves in critical service shall have blocks and bypasses.

Control valves in slurry or dirty service shall not have blocks and bypasses where deposits can build up in bypass lines and prevent bypass flow.

In all cases, block valves shall be line size, and bypass valves shall have a port size equal to, or one size smaller than, the control valve.

APPENDIX
CHECKLIST FOR CONTROL VALVES

Item	Indicate Requirement Yes	No
1. Has data plate been installed with correct information?	---------	---------
2. Is actuator action correct?		
a. Air to open?	---------	---------
b. Air to close?	---------	---------
3. Do materials of construction agree with vendor's data sheet:		
a. Body?	---------	---------
b. Seat rings?	---------	---------
c. Valve plug?	---------	---------
d. Valve plug stem?	---------	---------
e. Packing flange, nuts, studs, spring packing, wiper ring?	---------	---------
f. Seal bushing (if any)?	---------	---------
g. Actuator stem, extension seal (if any), steam connector, yoke, travel indicator, diaphragm or piston spring (if any), spring seat (if any)?	---------	---------
4. Are positioner or pneumatic relay, or both mounted and piped correctly?	---------	---------
5. Have extension bonnet, cooling fins, and bellows seal been specified?	---------	---------
6. Has body size been specified?	---------	---------
7. Has inner port size been specified?	---------	---------
8. Has type (single seat, double seat, other) been specified?	---------	---------
9. Has characteristic (equal percentage, linear, quick opening, modified parabolic, cage, ball, other) been specified?	---------	---------
10. Has direction of flow arrow been specified?	---------	---------
11. Has full stroke against prescribed signal, according to bench set calibration, been specified?	---------	---------

Item	Indicate Requirement Yes	No
12. Has hydraulic test been provided for:		
a. Pinhole leaks, body leaks?	_____	_____
b. Flow holes in interior of casting?	_____	_____
c. Shutoff against line pressure?	_____	_____
d. Tight shutoff valve leakage, in accordance with Paragraph 3.1.2?	_____	_____
e. Packing box/packing gland leakage?	_____	_____
13. Has operation of the handwheel been specified?	_____	_____
14. Has valve closure test been specified?	_____	_____
a. Standard closing time?	_____	_____
b. Fast closing time (if required)?	_____	_____
c. Fast closing time - slow opening time (if required)?	_____	_____
15. Has hysteresis been specified?	_____	_____
16. Is grease fitting, where applicable, properly installed?	_____	_____

DIVISION IX
ELECTRICAL CONTROL AND INSTRUMENTATION

09051 INSTRUMENTATION - PRESSURE RELIEF VALVES

1. SCOPE

This specification covers the basic requirements for the design, construction materials, and testing of safety, relief, pilot and Sta-tite* operated valves in process service.

2. REFERENCES

The following specifications and publications are referred to herein:

Pressure Relief Valve Data Sheet
Pressure Relief and Vapor Depressuring Systems

ANSI (American National Standards Institute) Standards:

ANSI/API 526 Flanged Steel Safety Relief Valves, 1972
ANSI/API 527 Commercial Seat Tightness of Safety Relief Valves with Metal-to-Metal Seats, 1978.

API (American Petroleum Institute) Recommended Practice:

RP 521 Guide for Pressure Relief and Depressuring Systems (latest edition).

ASME (American Society of Mechanical Engineers) Boiler and Pressure Vessel Code:

Section VIII, Pressure Vessels, Division 1, 1980

NACE (National Association of Corrosion Engineers) Standard:

MR-01 Material Requirement: Sulfide Stress Cracking Resistant Metallic Material for Oil Field Equipment, 1975 (revised 1980).

3. GENERAL

For safety valves in water and steam services, appropriate sections of the ASME Code shall apply. The ASME Code shall be the minimum acceptable where local codes do not cover relief valves or are less stringent. Thermal relief valves to protect against solar heat input are not covered herein

---

* Standard relief valves fitted with Sta-tite adapters can be used instead of pilot-operated relief valves. Sta-tite adapters are manufactured by the Lonergan Co., Philadelphia, PA.

(see Paragraph 6.2). The term "pressure relief valve" applies to all types of valves used as pressure relief devices required in the ASME Code. For definitions of valve types, see API RP 521.

4. TYPES AND MATERIALS

Pressure relief valves shall be provided, sized, and installed. Each relief valve shall be fitted with a stainless steel tag indicating the Proteco tag number.

4.1 All pressure relief valves shall be the manufacturer's standard type recommended for specified services. These valves shall conform to the following ASME and API standards: ASME Code, Section VIII; ANSI/API 526, for materials and sizes of flanged valves; ANSI/API 527, for seat tightness.

4.2 Pressure relief valves shall be of carbon steel with stainless steel trim. Carbon steel springs shall be provided for temperatures lower than 232°C (450°F), and tungsten alloy springs shall be provided for temperatures higher than 232°C.

4.3 Pressure relief valves with soft seats or secondary O-rings may be used for special services, subject to Proteco approval.

4.4 Where required by local regulations, the pressure relief valve inlet and the mating flange of the protected equipment shall be die stamped with the tag number.

5. LEAK AND PRESSURE TESTING

5.1 Manufacturer's Shop Test

5.1.1 Pressure relief valves in hydrocarbon liquid, vapor, and gas service shall be tested for set pressure and leakage in the manufacturer's shop. Cold differential set pressures shall be given on 09051-DS and stamped on the nameplate in accordance with ANSI/API 526.

5.1.2 Pressure relief valve bodies shall be pressure tested with air or steam in the manufacturer's shop before set pressure and leakage tests are conducted. The valve shall be tested after assembly with a gag in place. The gag shall be removed prior to set pressure and leakage tests. The valve body shall be tested as follows:

(a) Inlet side shall be tested at 1.5 times the specified set pressure.

(b) Outlet side shall be tested at 1.5 times the maximum allowable back pressure specified by the manufacturer.

5.2 Field Testing

Prior to field installation, all pressure relief valves shall be tested by qualified personnel for set pressure and leakage. To permit hydrostatic testing of equipment or piping, pressure relief valves shall not be gagged. Blinds shall be installed as required.

6. DATA SHEETS AND REQUIRED DOCUMENTS

6.1 The contractor shall furnish data sheets (09051-DS) and pressure relief valve sizing calculations to Proteco as they are completed.

6.2 The contractor shall furnish a complete pressure relief valve schedule, indicating in tabular form the number, location, size, type, make, and design conditions for all pressure relief valves. This schedule shall include thermal relief valves and valves furnished by subcontractors on auxiliary equipment.

6.3 Final selection of all pressure relief valves shall be subject to Proteco approval.

DIVISION IX
ELECTRICAL CONTROL AND INSTRUMENTATION

09052 INSTRUMENTATION - ELECTRIC MOTOR OPERATED VALVES

1. SCOPE

This specification covers basic requirements for electrically operated valves.

2. REFERENCES

The following specifications are referred to herein:

Instrumentation - General Requirements
Instrumentation - Control Valves

3. GENERAL

3.1 The references and requirements of 09010 and 09050 shall apply to this specification.

3.2 The contractor shall specify the mounting position of the valve operator to be certain that neither the motor nor the limit switch compartment is below the gear case.

4. VALVES

4.1 Valve body construction and trim materials shall conform to 09050.

4.2 Valves shall be adapted by the valve manufacturer for electric power operation.

5. THE VALVE OPERATOR

5.1 The valve operator shall be a self-contained unit arranged for top mounting on the valve yoke. It shall be equipped with motor, handwheel and clutching mechanism, torque and limit switches as required, lost-motion device, conduit boxes, and switch compartment, all suitable for outdoor installation in Class 1, Group C areas. Motor-operated valves in critical service, such as depressuring or safety shutoff on tanks, shall be fireproofed. All electrical enclosures except those meeting both area classification and NEMA Type 4 requirements shall be equipped with standard breathers and drains. Space heaters shall be provided for all compartments housing electrical equipment.

5.2 The valve operator shall be supplied with switches responsive to mechanical torque developed (1) in driving the valve either open or closed or (2) by intermediate obstructions met

in either direction. Torque switches shall be fully and independently adjustable and shall function without auxiliary relays or other devices.

5.3 The valve operator shall be supplied with quick break, wiping action, heavy duty rated limit switches. Acceptable minimums are:

480 volts AC	5 amp inductive
240 volts AC	15 amp inductive
110 volts DC	0.25 amp
50 volts DC	2.50 amp

5.4 The motor operator shall be of the high-starting-torque type, totally enclosed, with Class 1, Group C classification. It shall be designed for intermittent duty and shall have not less than a 15-minute rating for 80°C (176°F) temperature rise by resistance. The motor shall be equipped with prelubricated antifriction ball or roller bearings. They shall be fitted with grease and oil seals to prevent migration of lubricating oil from the gear housing into the motor. Stall torque rating shall be not less than 350 percent of rated full-load running torque for units operated by worm gear, or not less than 250 percent if spur and planetary gearing is used. However, where there are unusual conditions, such as high temperature differentials that stress the valve body, the running and static torque requirements of the motor operator shall be increased above that normally required, but not in excess of the maximum torque that the valve can withstand.

Breathers and drains shall be provided in the motor housing if it does not meet both area classification and NEMA Type 4 requirements. The motor shall be of sufficient size to open and close a valve against maximum differential pressure at 80 percent of rated voltage without exceeding the 80°C (176°F) temperature rise.

5.5 The reduction gearing shall run in a lubricant, and the method of lubrication shall permit operation of the motor operator in any position. All gear shafts shall be mounted on antifriction ball or roller bearings.

5.6 The lost-motion device shall enable the motor to start under no-load conditions and deliver the "hammerblow" necessary to unseat a sticking valve by permitting the motor to attain full speed before load is encountered.

5.7 The stem nut shall be either a drive nut located in a self-contained thrust bearing assembly or a two-piece type. Both types shall be changeable without removing the operator from the valve or disturbing the wiring. This construction shall permit the changing of units from one valve to another without disassembly of the operator.

5.8 The handwheel shall not be rotated by the motor operator, and the motor shall not be rotated by the handwheel. Failure of the motor gearing shall not render manual operation of the valve impossible.

5.9 A total of eight auxiliary contacts shall be furnished, four normally open and four normally closed.

5.10 Valve operators, except those in critical service, shall be provided with integrally mounted reversing contactors and selector switches. The common point of the contactor coils and secondary winding shall be grounded so that any ground fault will cause the contactors to drop out. Overload protection shall be installed on the supply side of the circuit, not in the grounding circuit. Valves in critical service shall have reversing contactors complete with thermal overload devices and selection switches remotely located from the motor, preferably in the motor control center.

DIVISION IX
ELECTRICAL CONTROL AND INSTRUMENTATION

09060 PRESSURE INSTRUMENTATION

1. SCOPE

This specification covers basic requirements for the design and installation of pressure instruments.

2. REFERENCES

The following specifications and publicaton are referred to herein.

Piping - Instruments

Instrumentation - General Requirements

API (American Petroleum Institute) Recommended Practice:

RP 550 Manual on Installation of Refinery Instruments and Control Systems, Part I - Process Instrumentation and Control, Section 4, 1980.

3. GENERAL

3.1 The references and requirements in 09010 apply to this specification.

3.2 A pressure instrument shall withstand the maximum pressure of the system to which it is connected; however, over-range protection, at least 1.3 times the maximum scale reading, shall be furnished for all instruments.

3.3 Ranges for pressure instruments shall be approximately twice the normal operating range. Suppressed-range instruments shall be used in control loops to ensure proper readability and control.

For suppressed-range applications, it is also necessary to install a full-range transmitter in order to provide measurement while the pressure is below or above the suppressed range. Readout for the full-range measurement should be adjacent to, and of the same type (recorder, indicator, digital display) as, the suppressed-range readout.

3.4 Direct-reading indicating scales and displays shall be used for pressure instruments.

3.5 Process connections for pressure instruments shall normally be 3/4 in. NPT minimum, including nipple or valve connections, or both. Applications that call for connections of different sizes shall be approved by Proteco.

4. MODIFICATIONS TO API RP 550, PART I

The following items are amendments to API RP 550, Part I. The paragraph numbers refer to those given in Section 4 of that Recommended Practice.

Paragraph 4.2.5 (Addition)

Pressure gages for severe pulsating services, such as reciprocating pumps and compressors, shall be helical primary actuated with closed end connected directly to pointer shaft. In less severe pulsating services, the liquid-filled case type may be used. For example, glycerin may be used where ambient conditions permit. When liquid gages are used, top filling is required. The filling plug shall act as a blowout seal at a maximum internal pressure of 70 kPa gage (10 psig).

Filled systems shall have a small air space above the liquid to prevent thermal expansion forces from acting on the bourdon tube, which would oppose the measurement forces.

Paragraph 4.2.6.2

Continuous-duty chemical seals shall be used where shown to seal the instrument from overpressure. The chemical seals shall be compatible with the line specification and process. Gages connected to the chemical seal systems shall have a "Do Not Disconnect" tag.

The flexible capillary between seal and instrument shall be supported throughout its length. Any excess shall be coiled alongside the process point to facilitate withdrawal of the element.

Paragraph 4.2.7.1

Stainless steel compression-type fittings and annealed stainless steel tubing shall be used. Generally, the nominal tubing size shall be 10 mm (3/8 in.) OD, unless restricted by operating pressure.

Paragraph 4.2.9

The minimum material of construction for pressure gages shall be Type 316 stainless steel bourdon tubes, sockets, stems, and movements, unless otherwise specified. For salt-water service the minimum material shall be Monel.

Paragraph 4.3 (Addition)

A pressure gage shall be installed at the inlet and outlet of all heat transfer equipment in critical service. Where banks of exchangers are used in series, in parallel, or in series-parallel, a pressure gage shall be installed on the inlet and outlet of each series or parallel bank of exchangers, or both.

Valves and plugged connections for test gages shall be installed between individual exchangers in the bank.

Paragraph 4.3.2

Gages subject to vibration shall have support that is independent of the piping or equipment. Commercially available valves with a built-in support bracket and a bleeder valve may be used. Valve material shall comply with the line piping specification and rating. Where the pressure gage is the only instrument on the process connection and close coupling is chosen, the block valve specified may be selected with the optional single 1/2 in. NPT female union to allow for gage orientation.

Paragraph 4.3.3 (Modification)

The term "shall" is to be used in place of "should."

Paragraph 4.3.4 (Modification)

Use close-coupled siphons rather than pigtails.

Paragraph 4.3.5 (Modification)

Delete "3 1/2-inch (90-millimeter)."

Paragraph 4.4.1 (Addition)

Pressure switches shall have an adjustable set point or a differential gap with a reference or calibrated scale. Where explosionproof, flameproof, or weatherproof housings are used, an internal scale is acceptable; however, an external scale with protective covering is preferred for general-purpose housings. Dead-front or shrouded terminal blocks and entrance bushings to the case are required. For direct process connection, or when the local environment is humid or corrosive, pressure switches with hermetically sealed switch mechanisms are strongly recommended. Electrical entry and electrical connections shall be completely isolated from process connections and components in contact with the process.

When tamper-proof switches are required, they shall have internally adjustable set points or locking devices on the external set-point adjustment.

Safety pressure relief valves shall not be used as pressure regulators.

Pressure transmitters shall have a transmitted accuracy within 0.5 percent of the span for which they are calibrated.

For all applications, priority shall be given to more accurate and stable transducers, such as the strain gage, variable-reluctance, and variable-capacitance types.

Paragraph 4.4.4 (Addition)

When environmental classification permits copper-bearing materials, bronze bourdon tubes may be used in air-actuated receiver gages. The receiver gage shall have a minimum 1/4 in. NPT stem connection and 115 mm (4 1/2 in.) case.

Transmitter output indicators shall be located at grade or platform. When the transmitter is part of a control loop, its output shall be clearly readable from its associated control valve manifold. Local indicators shall have a minimum scale length of 100 mm (4 in.).

DIVISION IX
ELECTRICAL CONTROL AND INSTRUMENTATION

09070 INSTRUMENTATION, TRANSMITTERS AND RECEIVERS

1. SCOPE

This specification covers basic requirements for the design, installation, and testing of transmitters and receivers.

2. REFERENCES

The following specifications and publication are referred to herein:

Instrumentation - General Requirements

Piping - Instruments

NFPA (National Fire Protection Association) Code:

No. 493 Instrinsically Safe Apparatus for Use in Hazardous Location, 1978

3. GENERAL

3.1 The references and requirements of 09010 and NFPA No. 493 apply to this specification.

3.2 All instrument loops shall consist of separate transmitter and receiver configurations. Exceptions such as a single head for a displacement level controller or any local single-case controller shall be subject to Proteco approval.

4. TRANSMITTERS

4.1 General

4.1.1 All transmitters shall be of the indicating type or, if blind, shall be provided with local indicators. Failure of local indication shall not cause failure of transmitter output. Elimination of a local indicator shall require Proteco approval, and test connections shall be provided in its place. Indicators shall be located so that they are readable from a normal operating walkway or from ground level; in addition, they shall meet the requirement of Paragraph 5.1.5.

4.1.2 Transmitters having a linear output throughout the sensing range shall be used unless otherwise approved by Proteco. However, in the measurement of flow by differential pressure, use of a square-root extractor to linearize output signal with respect to flow shall require Proteco approval.

4.1.3 On critical loops when suppressed-range transmitters are used, a parallel full-range transmitter is required for startup of the unit.

4.1.4 Transmitters measure differential (excluding level measurement) across any vessel shall be located so that no error exists because of an unbalancing liquid in one leg. To prevent the occurrence of errors, the transmitter should be located above the highest pressure tap or other sealing configuration.

4.1.5 Transmitters shall be as close coupled as possible, adequately supported, and easily accessible. A Proteco-approved valve manifold or a valving configuration adequately supported shall be provided to permit a zero check of the transmitter.

4.1.6 Where required by project location, lightning protection shall be provided by the instrument vendor as an integral part of, or as a factory-assembled external addition to, the transmitter.

4.2 Pneumatic

4.2.1 Pneumatic transmitters shall have a linear output of 20 to 100 kPa, gage (3 to 15 psig) throughout the measured range. Exceptions shall require Proteco approval.

4.2.2 Pneumatic transmitters shall be provided with a 6 mm (1/4 in.) tee and plug for testing the output signal.

4.3 Electronic

4.3.1 Electronic transmitters shall have a direct current (DC) output of 4 to 20 milliamperes, unless otherwise approved by Proteco, and shall be certified as being intrinsically safe or nonincendive, both as individual pieces and for use in complete loops. This certification may include the use of barriers. Certification of electronic transmitters, with or without barriers, shall be by a recognized body with jurisdiction at the place of installation.

4.3.2 Electronic transmitters shall be of the DC current-regulating type and capable of operating with the power source located in a nonhazardous area. These transmitters shall utilize a two-wire system for signal/power transmission. Exceptions shall require Proteco approval.

4.3.3 The manufacturer shall provide performance data reflecting the susceptibility of the equipment to interference from radio and commercial frequencies within the operating range of the instrument. This information shall be accompanied by a written guarantee of performance.

5. RECEIVERS

5.1 General

5.1.1 Any device that receives a transmitted signal representing the magnitude of a variable is a receiver. This includes the display portion as well as the control portion of a split architecture system or any of the many operator interface devices currently available.

5.1.2 Both traditional analog-type instruments and cathode ray tube (CRT) receivers, as well as any possible combination of the two, shall be given consideration. However, Proteco approval is required for receivers other than those described in Paragraph 5.1.3.

5.1.3 When board mounted receivers are used, they shall be of the miniature type with a pullout chassis. High-density arrangements shall be used. Any panel indicated variable should be capable of being trend recorded. Critical variables shall be assigned dedicated recorders.

Proteco approval is required for the entire recorder system design. This covers both dedicated and trend recorders and includes the availability, combination, and repetition of all process variables for recording.

5.1.4 Trend recorders shall have a maximum of three or four pens, with a maximum of 15 inputs per recorder. Dedicated recorders shall have a maximum of four pens for like services but shall be limited to two pens for unlike services, unless they consist of a logically related grouping. Proteco approval is required for proposed service combinations. Inking systems shall be of such a type as to prevent blurring of records upon pen crossover.

5.1.5 Whenever a control valve action manipulates a variable and this variable has a transmitted signal, a local receiver gage showing the output of the associated transmitter shall be provided and shall be readable at the control valve. If no transmitter is being used, a local pressure or temperature indicator shall be provided at the valve. If a local receiver gage is used, failure or removal of this indicator shall not cause failure of the loop. Local receiver gages shall have a plastic or Type 316 stainless steel tag showing the transmitter number, service, and range.

5.2 Pneumatic

5.2.1 Local indicating gages shall be the 100 mm (4 in.) minimum dial type, with the spring or input range as well as the scale shown on the dial.

5.2.2 Board-mounted recording receivers shall be provided with damping. Where the degree of damping is variable, adjustments shall be made from the front of the instrument.

5.3 Electronic

5.3.1 Each controller, recorder, indicator, computer input, alarm amplifier, and so forth, associated with the common measurement loop shall operate in parallel on the same voltage signal produced by a single load resistor, equivalent network, or equivalent device in the transmitter current circuit (normally, 4 to 20 milliamperes, DC). The input impedance of the circuit to each device shall be of sufficient magnitude to insure negligible error. The total number of instruments in a single loop (achieved by adding each load resistance) shall not exceed the design load resistance of the power supply for that loop.

6. SCALES

Scales for board-mounted or local indicators shall be direct reading for pressure and temperature. Flow indicators shall be direct, linear, or 0-10 square root, depending on the application. Level indication shall be direct reading or 0-100 uniform. Local indicating receivers (other than flow) shall be as specified in Paragraph 5.1.5.

7. CHARTS AND CHART DRIVES

7.1 Charts shall be 0-10 square root and 0-100 uniform for differential flow, depending on whether or not a square-root extractor is used. For all other miniature recorders, charts shall be 0-100 uniform or as called for by Project Specifications. Charts for large-case temperature recorders shall be characterized for the type of thermocouple used. Combination charts shall be used where more than one unlike variable is to be recorded. Multipoint temperature recorders shall have 150 mm (6 in.) or wider strip charts. A minimum scale width of 100 mm (4 in.) shall be used on all other charts. A minimum of six months' supply of charts and ink shall be provided for each recording instrument.

7.2 Chart drives for all electronic and electric recorders shall be synchronous AC electric motors. Field units shall meet area classification. For locally mounted recorders in areas where electricity is not available or frequency control of AC power supply is not adequate to permit use of synchronous motors, chart drives may be spring wound, pneumatic, or gas actuated as determined.

Pneumatic chart drives shall be of the impulse type. If a pneumatic driving force other than air is used, local environmental requirements shall be met.

7.3 Charts and scales for direct instruments shall have ranges in accordance with the units shown on page 4. Charts and scales for other instruments shall have factors to convert to these units.

Measured Variable or Transmission Signals	API Preferred SI*	Customary Units
Electronic Signals	4 to 20 milliamperes	4 to 20 milliamperes
Air Signals	20 to 100 kPa, gage	3 to 15 psig
Volumes	m^3	scf, bbl, US gal
Flow capacities	dm^3/s, kg/s	US gpm, scfh, bbl/d, lb/h
Pressures	kPa	psi, psia, in. Hg vac
Temperatures	°C	°F
Analyzers	As noted (pH, $\%O_2$)	As noted (pH, $\%O_2$)

*Units shall be subject to regional or local preference

DIVISION IX
ELECTRICAL CONTROL AND INSTRUMENTATION

09071 INSTRUMENTATION, CONTROLLERS

1. SCOPE

This specification covers basic requirements for the design, installation, and testing of controllers, it is intended to be used in conjunction with API RP 550, Part I, Section 5.

2. REFERENCES

The following specifications and publication are referred to herein:

Instrumentation - General Requirements

Instrumentation - Liquid Level

API (American Petroleum Institute) Publication:

RP 550 Manual on Installation of Refinery Instruments and Control Systems, Part I, Section 5: Automatic Controllers, 1977.

3. GENERAL

3.1 The references and requirements of 09010 apply to this specification.

3.2 This specification is primarily intended for use in the application of process control instruments.

4. MODIFICATIONS TO API RP 550

The remainder of this specification consists of amendments to API RP 550. The paragraph numbers refer to those in API Rp 550, Part I, Section 5.

<u>Paragraph 5.5.3 (Modification)</u>

Generally, the use of three-mode temperature controllers is preferred; however, in those applications where the decision is made to use the two-mode type, the option to add rate action must be provided without replacement of the instrument.

Paragraph 5.7.1 (Addition)

All secondary controllers in a cascade system shall have indicating, tracking set points. The controlled secondary variable shall be continuously indicated.

Paragraph 5.8.4 (Modification)

Controllers for board-mounted operation shall not be mounted at the control valve except with permission of Proteco.

Paragraph 5.10.1, Item 1 (Addition)

Pneumatic controllers having three-position transfer switches and regulators shall be used. If the instrument is of the tracking type, or if it has a true deviation meter that permits bumpless transfer from both manual to automatic and automatic to manual positions, the seal position is not needed.

Paragraph 5.10.3 (New Paragraph)

All miniature electronic analog control stations that are not by design computer-compatible shall be capable of being upgraded in the field to computer-compatible stations by means of manufacturers' conversion kits. These shall consist of a computer interface module (for example, printed circuit board) and all other parts necessary to effect conversion without replacement of the controller module.

DIVISION IX
ELECTRICAL CONTROL AND INSTRUMENTATION

09080 INSTRUMENTATION - WIRING FOR INSTRUMENTS AND COMPUTERS

1. SCOPE

This specification covers minimum requirements for electrical signal carriers used for the interconnection of factory-encased industrial instruments and computer components, where routed lengths of runs do not exceed 750 m (2500 ft).

2. REFERENCES

The following specifications and publications are referred to herein:

Instrumentation - General Requirements
Instrumentation - Control Boards
Instrumentation - Seals, Purges, Winterizing, and Fire Protection
Electrical - Drawings and Design Calculations
Fireproofing - General Requirements

ANSI (American National Standards Institute) standard:

ANSI/NFPA

No. 70 National Electrical Code, 1978
MC96.1 Temperature Measurement Thermocouples, 1975.

API (American Petroleum Institute) publication:

RP 550 Manual on Installation of Refinery Instruments and Control Systems, Part 1, Section 7: Transmission Systems, 1974.

UL (Underwriters Laboratories) publication:

UL 1424 Power-Limited Fire-Protective Signaling-Circuit Cable, 1978.

3. DEFINITIONS

The three common types of wire discussed in this specification are defined below:

Power Control Wires - Carry high-level signals, typically 12V, 24V, 48V, and 125V direct current (DC) and 115V or 230V alternating current (AC). These signals are usually associated with on/off control modes used for alarms, interlocks and pulse-type actuation.

Standard Signal Wires - Carry medium-level signals, which are typically 4 mA to 20 mA, 10 mA to 50 mA, 1V to 5V, or -10V to +10V.

Thermocouples Extension Wires - Are specific to the thermocouple materials and carry low-level millivolt signals from low-impedance sensors.

4. WIRE AND CABLE SELECTION

4.1 General

4.1.1 Conductor size shall be the minimum specified or larger, depending on current carrying requirements, impedance matching, and available driving voltage.

4.1.2 Carriers for pulse-type or high-frequency signals, such as serial logic and tachometer outputs, shall be specified by the equipment manufacturer and approved by Proteco.

4.2 Standard Signal Wire

4.2.1 Standard signal conductors shall meet the requirements of ANSI/NFPA No. 70, Article 725, for Class 3 circuits using power limited tray cable (PLTC). This cable shall meet the test requirements of UL 1424. Conductor sizes smaller than 0.57 mm^2 (No. 20 AWG) shall require Proteco approval.

4.2.2 Single pairs shall be seven-strand 1.31 mm^2 (No. 16 AWG) annealed copper conductor with polyvinyl chloride (PVC) insulation. The pairs shall be twisted six times per 300 mm (12 in.) minimum, and each pair shall have a 100 percent coverage electrostatic shield with tinned copper drain wire. The overall jacket shall be PVC. Installed pairs shall include a minimum of 10 percent spare pairs in each conduit, duct, or tray.

4.2.3 Multipair cable conductors shall be seven strand 0.57 mm^2 (No. 20 AWG) annealed copper conductor with PVC insulation. The pairs shall be twisted two times per 300 mm (12 in.) minimum, and each pair shall have a 100 percent coverage electrostatic shield with tinned copper drain wire. Pairs shall be numbered for identification within the cable. Each cable shall include a minimum of 10 percent spare pairs and communication wires.

4.2.4 Color coding shall be done by solid contrasting colors and shall be consistent between single pairs and pairs in multipair cables.

4.2.5 Cables and wires in open trays shall conform to Paragraphs 4.2.1 through 4.2.3 and, in addition, shall have a metal armor sheath.

4.2.6 Underground standard signal wire not in conduit shall conform to Paragraphs 4.2.1 through 4.2.4 and, in addition, shall have a waterproof jacket certified for direct burial. All direct burial installations must have specific Proteco approval.

4.3 Thermocouple Extension Wire

4.3.1 Thermocouple extension wire shall meet the requirements of ANSI/NFPA No. 70, Article 725, for Class 2 or Class 3 circuits using PLTC. This cable shall meet the test requirements of UL 1424.

4.3.2 Single pairs shall be solid 1.31 mm^2 (No. 16 AWG) alloy or copper with PVC insulation. The pairs shall be twisted six times per 300 mm (12 in.) minimum, and each pair shall have a 100 percent coverage electrostatic shield with a tinned copper drain wire. The overall jacket shall be PVC. Installed pairs shall include a minimum of 10 percent spare pairs in each conduit, duct or tray.

4.3.3 Multipair cable conductors shall be solid 0.57 mm^2 (No. 20 AWG) alloy with PVC insulation. The pairs shall be twisted two times per 300 mm (12 in.) minimum, and each pair shall have a 100 percent coverage electrostatic shield with a tinned copper drain wire. Pairs shall be numbered for identification within the cable. Each cable shall include a minimum of 10 percent spare pairs and communication wires.

4.3.4 Color coding shall conform to ANSI MC96.1.

4.3.5 Standard limit of error shall meet the requirements of ANSI MC96.1.

4.3.6 Underground thermocouple extension wire shall conform to Paragraphs 4.3.1 through 4.3.5 and, in addition, shall have a waterproof jacket certified for direct burial. All direct burial installations must have specific Proteco approval.

4.3.7 Thermocouple extension cables in open trays shall conform to Paragraphs 4.2.1 through 4.2.4 and, in addition, shall have a metal armor sheath.

4.3.8 Thermocouple extension wires in high ambient temperatures shall be Teflon insulated with Teflon jackets. Only single pairs shall be used. High temperatures range from 80°C to 204°C (176°F to 400°F).

4.4 Control Wires

4.4.1 Control wires shall meet the requirement of ANSI/NFPA No. 70, Article 340, for Type TC power and control tray cables.

4.4.2 Single conductors and/or twisted pairs pulled in bundles through conduit shall be 2.1 mm^2 (No. 14 AWG) minimum for all control voltages.

4.4.3 Multiconductor cables shall use 1.31 mm^2 (No. 16 AWG) minimum for AC and DC voltages 50V or greater and 0.57 mm^2 (No. 20 AWG) minimum for control voltages less than 50V.

4.4.4 Single pairs with protective sheaths shall be 1.31 mm^2 (No. 16 AWG) minimum.

4.4.5 All sizes of conductors shall be seven-strand annealed copper.

4.4.6 Installed wires shall include a minimum of 10 percent spare wires in each conduit, duct, or tray.

5. TERMINATIONS AND ENTRIES

5.1 Control House Entries

5.1.1 Cable in conduit entering above ground shall be sealed outside the building at the point of entry with an explosionproof and vaporproof seal.

5.1.2 Direct burial cable shall be sleeved in conduit at the point of entry and sealed with a waterproof and explosionproof seal.

5.1.3 Cable in conduit entering underground shall be sealed at the point of entry with an explosionproof and vaporproof seal.

5.1.4 All sheathed cables shall be fanned in outside vented boxes to prevent gases from entering the control house by way of the cable sheaths.

5.2 Field Instrument Terminals

5.2.1 All field instrument terminal boxes shall be close coupled to the field instruments, such as transmitters, solenoid valves, and process switches, or shall be an integral part of the instrument.

5.2.2 Terminal boxes shall have integral terminal strips; wire nut connections between any instrument and connection pair shall not be used.

Terminal boxes shall be furnished with threaded covers or cover plates secured with screws and adequately gasketed.

5.2.3 Explosionproof seals shall not be installed between instrument disconnect terminals and instruments. Instrument removal shall not require removal of explosionproof seal.

5.2.4 Explosionproof seals shall form a dense, continuous flame barrier that is impervious to water and petroleum and has a melting point above 98°C (200°F).

5.2.5 Flexible metal conduit or other type of sealed flexible cable shall be used to connect field isntruments to rigid metal conduit or terminal boxes. The flexible conduit shall be a nominal 1 m (36 in.) in length and have a minimum loop of 30 cm (12 in.). Field instruments include, for example, transmitters, thermocouple heads, analyzer probes, switches, and solenoids.

5.2.6 Conduits or cables shall not enter boxes or instruments at the top. Entry at the bottom is preferred; however, where side entry is unavoidable, a waterproof hub seal with an O-ring shall be used.

6. MODIFICATIONS TO API RP 550, PART 1, SECTION 7

Paragraph 7.4.3.2, Table 7-3 (Modification)

Minimum separation between signal wires and power wires shall be as follows:

Power Wiring System	Minimum Separation	
V (Nominal)	m	in.
115	0.30	12
250	0.46	18
460	0.60	24
4160	1.20	48

Where local spacing codes are more stringent, those codes shall pertain. Minimum spacing of 1 m (3 ft) is recommended wherever practical.

Paragraph 7.4.4.1.d (Addition)

Grounding of signal circuits shall be at one point only. Signal conductors and shields shall not be grounded in the field. Shields shall be grounded to the signal ground bus. Signal conductors shall be grounded to the signal ground bus when grounding is required.

Paragraph 7.4.4.5.c (Modification)

Floating thermocouple loops are preferred. Thermocouple extension wire shall not be grounded. Thermocouple extension wire shields shall be grounded in the control room.

Where grounded thermocouple tips are used, shields for thermocouple extension wire shall be grounded at the thermocouple head only. Grounded thermocouple tips require Proteco approval.

Paragraph 7.4.5.4 (Addition)

Ambient temperature limits for signal and control wire are 80°C (176°F) maximum for installation, 5°C (41°F) minimum for storage, and -9°C (15°F) minimum for pulling.

Armored cable shall be used in open trays, ladders, or ducts.

Paragraph 7.4.10.1.c.2 (Modification)

Vertical trays shall be used.

Paragraph 7.4.10.1.c.8 (Modification)

Cable runs past equipment shall be 5 m (15 ft) above exchangers and pumps, and 3 m (10 ft) laterally from pumps, exchangers, and furnace walls.

Thermocouple junction box (head) heat protection shall be provided to prevent the head temperature from exceeding 50°C (120°F).

Paragraph 7.4.10.1.c.9 (Modification)

In fire hazard areas, wiring runs shall be fireproofed.

Paragraph 7.4.10.2.c.2 (Addition)

Splices shall not be permitted without specific Proteco approval. Underground splices shall not be permitted under any conditions.

Paragraph 7.4.10.5 (Addition)

Wire pairs in connectors shall use adjacent pins.

Shield drain wires in connectors and terminals shall use connector pins or screws adjacent to respective signal pairs.

Twisting of pairs shall be maintained to within 50 mm (2 in.) of the terminals.

Cable shields or drain wires shall never be used as conductors.

Weatherproof pull boxes shall have a minimum of three conduit hubs. Covers shall be secured with lever-type fasteners (Crouse-Hinds Condulet Form 7, or equal). Pull boxes with

covers fastened with screws through tapped holes in the body are not acceptable (Crouse-Hinds Condulet Form 8, for example).

Paragraph 7.4.10.6 (Addition)

Ten percent spare terminals shall be provided in field junction boxes.

Paragraph 7.4.10.9.h (Modification)

Terminal strips in field junction boxes and control room distribution panels shall be of modular construction. Electrical contacts shall be of the pressure plate type, with all live parts recessed into the insulated block.

The terminal strips shall have separate connections available for tests leads or jumpers. All screws and parts in the terminal blocks shall be captive. Construction materials shall be stainless steel or nickel-plated brass for all electrical contacts, and aluminum for all other metal parts.

Thermocouple extension wire field terminals shall be avoided when accuracy must be maximized. The preferred method is a continuous pair of thermocouple extension wires from thermocouple head to control room instrument. Where this method is impractical or uneconomic, specific Proteco approval for use of other methods is required.

Terminal screws shall have integral lock washers as a minimum or tension designed construction equivalent to a lock washer.

DIVISION IX
ELECTRICAL CONTROL AND INSTRUMENTATION

09081 INSTRUMENTATION - ALARMS AND PROTECTIVE DEVICES

1. SCOPE

This specification covers requirements for the design, installation, and testing of safety system alarms and protective devices.

2. REFERENCES

The following specifications and publication are referred to herein:

Instrumentation - General Requirements

API (American Petroleum Institute) Publication:

RP 550 Manual on Installation of Refinery Instruments and Control Systems: Part 1 - Process Instrumentation and Control, Section 13 - Alarms and Protective Devices, 1976.

3. GENERAL

3.1 The references and requirements contained in 09010 shall apply to this specification.

3.2 All equipment furnished by a manufacturer or vendor shall conform the the requirements of this specification. For example, package unit control panels, auxiliary control panels, control systems, and instruments shall be designed and installed to the same specification as all other like items on the project. Preferably, all annunciator systems should be furnished from one manufacturer and to the same specification for any given contract.

3.3 The manufacturer shall provide performance data reflecting the susceptibility of the equipment to interference from radio and commercial frequencies within the operating range of the alarm system. The capability of the equipment to withstand power surges and line transients, such as those caused by lightning, shall also be stated. This information shall be accompanied by a written guarantee of performance.

3.4 Loop diagrams, logic diagrams, and (where applicable) ladder diagrams of the system shall be provided.

4. ALARM ANNUNCIATION

4.1 To minimize electrical interference, both field-mounted and control room audible alarm devices (horns, sirens, buzzers, and so on) shall be of the solid-state, low-energy type with sufficient output energy to be effective under field conditions. Inductive AC voltage-actuated devices shall not be used within process unit areas. Audible alarm devices associated with equipment in isolated or off-site areas and local panels outside unit areas, which are of other than noninductive solid-state design, shall be subject to Proteco approval.

4.2 Enclosures and wiring for alarm sensing devices installed in the field must meet the requirements of the area in which they are located. Intrinsically safe systems eliminate the need for explosionproof enclosures for field sensors.

4.3 When an intrinsically safe annunciator is used, inputs from powered sources such as switchboards and current trips normally cannot be connected to the annunciator without the use of approved interposing devices. Alarm inputs shall also be segregated in accordance with the regulations governing the certificate of intrinsic safety.

4.4 Where solid-state alarm systems are provided, the circuit boards shall be of the plug-in type. Each circuit board shall contain the circuitry associated with two alarms (preferred) and up to a maximum of four. The cards shall be clearly identified as to type and alarm point served. Split-architecture annunciator systems with separate logic and alarm indicating units are an acceptable configuration.

4.5 Pneumatic systems may be used on panels for small remote or field units where electricity is not readily available. Pneumatics may also be used for panels located in classified areas where explosionproof cabinets would be required for electric panels.

4.6 Test, acknowledge, and reset buttons shall be located so that the lighted annunciator indicator affected by the button is clearly visible from the button location.

4.7 Annunciator panel test and rest buttons shall be either recessed in their mounting rings or provided with spring-loaded hinged covers to prevent inadvertent operation.

4.8 Critical alarms should have uninterruptible backup power so as to maintain operation through a common power failure for the same duration as the control instrumentation with which they are associated.

4.9 Where local alarm annunciators forward only a common trouble alarm to the central control room for a selected group of local malfunctions, the "reflash" circuit should be used. Upon receipt of a common trouble alarm, the operators in the central control are notified by both an illuminated "trouble" window and an audible alarm. Verification and identification of the fault are obtained either (1) by radio communication with the area or (2) by dispatch of maintenance personnel followed by an appropriate communications system. The audible alarm is acknowledged and silenced in the control room, but the common trouble window on the annunciator remains lit.

4.10 Status indications such as valve position and pump running lights shall have a different representation from alarm conditions and, if conventional control panels, shall be separately located to assist operator identification.

5. PROTECTIVE SYSTEMS AND DEVICES

5.1 Selection of equipment used in protective systems

(a) Wherever practical, field initiating devices and relays shall have hermetically sealed contacts with suitable material for the operative voltage. Encapsulated switches, such as the mercury type, may be used but must be mounted so as to be free from vibration. Electrical area classification shall be adhered to in all field installations.

(b) Solenoid valves shall have watertight enclosures with junction boxes, as well as molded coils with high-temperature Class F insulation rating.

(c) Initiating devices such as pressure switches shall be selected for their operating range, repeatability, and suitable overload protection. The actuation or alarm point is normally set between 20 percent and 80 percent of the operating range chosen.

(d) Flow switches shall be of a repeatable type and shall provide a means for field and/or shop calibration.

(e) All electric and electronic components, especially diodes, resistors, and the like, shall be de-rated so that the maximum rating will exceed the requirements of any worse-case condition of load, transients, and temperature tolerances.

(f) Protective systems that incorporate self-check features, or provide a means of periodically performing system checks while the process units are operating, shall be installed.

5.2 When solid-state systems are used, they shall be constructed from commercially available function cards and components. A multiple-function-circuit card or subpanel shall not be used. Use of specially designed and constructed circuits or circuit boards shall be subject to Proteco approval.

5.3 The fault failure position shall be reviewed for all components to establish that the system fails to the declared safe mode. Where microprocessors, programmable controllers, or solid-state logic are used, special circuitry and self-diagnosis should be a design feature to promote reliability. Any automatic action taken as a result of self-diagnosis shall result in a fail-safe mode. This mode may be such that all outputs revert to a predetermined value and an alarm is sounded, or the faulty system may be isolated and the operation taken over by a duplicate standby system.

5.4 If it is not feasible to shut the equipment down to test the interlock system, the system shall be capable of being bypassed. Servicing in bypass mode shall not affect operations. When an interlock circuit is bypassed, the alarm function shall remain operable and an indicator light shall be illuminated to alert the operator that the bypass function has been invoked.

Bypass switches shall be installed only where the requirement exists to override or enable certain circuits that would inhibit an orderly startup without such action being taken, or as an aid in maintaining a predefined fallback or reduced-capability emergency operational configuration. Bypass switches and associated circuitry shall be subject to Proteco approval.

Bypass switches that interact with shutdown sequence logic shall be of the keylock type. They shall be located on the operator's control panel, together with an individual switch position status light. The status light shall remain illuminated as long as the switch is in the bypass position. No means shall be provided to extinguish this light other than taking the switch out of the bypass position.

5.5 Interlock systems shall be designed to have the minimum components, consistent with good engineering practice, to provide a high degree of reliability. Sufficient test connections shall be provided on input and output terminals to verify system integrity.

5.6 Input and output test connections shall be of a type that allows the system to be isolated and checked without interfering with the operational environment.

6. MODIFICATIONS TO API RP 550, PART I

The remainder of this specification consists of amendments and/or additions to API RP 550. The paragraph numbers in italics refer to those in API RP 550, Part I, Section 13.

6.1 Alarm Annunciation Systems

13.3.1 Dedicated Alarms (Addition)

Alarms shall be logically grouped to follow the process. Spare windows shall not be grouped in one cluster but shall be distributed throughout the sections of the alarm panel associated with the various process areas. This is to be done after the known process allocations have been completed.

Nameplate nomenclature shall be submitted to Proteco for approval.

Alarm indicator points of conventional multipoint alarm panels mounted on a control panel shall be dedicated to a single function.

Each alarm function indicator input circuit shall be designed to accept either normally open or normally closed actuating contacts. ("Normal" is that position of, or condition within, a specific device when that device is not subjected to any external force, whether electrical or mechanical.)

When actuator contacts or circuitry return to normal operating condition, alarm indicators and audible annunciators shall also return to their normal condition (see Table 1). When annunciator cabinets of the first-out-sequence type require functional subdivision into separate sections, each section shall retain its own first-out capability. No additional components shall be required for electrical or electronic subdividing in the field.

13.3.8 Electrical Requirements (Addition)

Multipoint alarm indicator panels installed in main or unit control room panels shall be low-voltage solid-state electronic systems (on the order of, but not limited to, 24 volts DC). Circuits to primary elements in the field shall be certified intrinsically safe where area classification requires. Field circuits and devices that are located in nonhazardous areas or do not pass through hazardous areas need not be intrinsically safe.

13.3.9 Alarm Actuators (Addition)

Alarm actuating devices shall be installed and connected so that an abnormal condition that occurs in the equipment being monitored will cause the contacts to open or the field circuit to be de-energized. Alarm contacts that cause energization of the field circuit under abnormal conditions, such as exist in a fire system, shall be subject to Proteco approval and shall be fault monitored.

13.3.10 Testing (Addition)

It is further recommended that, in addition to a panel functional test, the equipment be checked and monitored with the power on during a 72-hour burn-in period. In certain instances, a heat soak test will be required. When this requirement exists, the heat soak test will be conducted to the cycle frequencies and temperature excursions specified by Proteco.

6.2 Protective Interlock Systems

13.4.1 General (Addition)

All system components shall be clearly identified and cross-referenced as to location and function. Logic cards shall be polarized so that it is not possible to plug one type of card into another position.

In a plant, unit, or system with electronic instrumentation, the associated interlocks shall be electric or electronic except where such devices are not available for the required functions ro service. Initiating devices shall be direct and independent of the general indicating or control instrumentation.

Process-type safety shutdown interlock devices shall be designed and installed so that when de-energized or depressured, they will cause shutdown of the equipment they are installed to protect. However, fire systems in general - break-glass stations; heat and gas detectors; foam, water deluge, and Halon systems - shall be installed so that they are energized to shut down and shall be fault monitored to detect a line break or system fault.

All interlock shutdown systems shall be actuated from a voltage source dedicated exclusively for that purpose.

For field-mounted system interlock or alarm devices (whether wired in series or in parallel), all wires shall be run from individual devices to a terminal block common to that system. Wiring of series connected interlock or alarm devices shall be done by jumpers at the system common terminal block. The

system common terminal block shall be central to all devices in the system it serves or shall be located at the most logical control panel. Paralleling of devices operated by a single transmitter or field-mounted primary measuring device, where necessary, may be done within the control room or at the centrally located terminal block. DC relay contacts shall be protected with arc suppressing circuits.

13.4.3 Annunciator (Addition)

All trip functions shall actuate an alarm. The alarm annunciator shall be actuated from the same initiating device as the protective interlock system to insure concurrent indication and actuation. However, the protective interlock system shall not be subservient to the alarm system. That is, a fault within the alarm system shall not cause the input relay or switching device to actuate the interlock control function.

Lamps associated with status displays shall be fused separately from the interlock system so that an earth fault on a lamp does not trip the interlock system.

In general, the interlock system fusing shall consist of one per system (if this provides adequate electrical protection) to insure that the overall system trips safely.

13.4.5 Final Control Elements (Addition)

Sequential controls or interlock systems, where a hazard could occur if the control action does not take place, should in general involve a command-and-check sequence before moving to the next stage.