quasar energy group

RINGLER FARMS
ANAEROBIC DIGESTION FACILITY

JUNE, 2012
2277 County Road 156
Cardington, OH 43315-9742

STATE OF OHIO
ALAN R. JOHNSON
46333
REGISTERED
PROFESSIONAL ENGINEER

OBC NOTES

Code Summary Report

Proposed Building
Ringler Farms Energy, LLC
Project address: 2277 County Road 156.
Cardington, OH 43315-9742

The project has been designed around the following codes: 2011 OBC, OMC, OPC, OFC, NEC & ASHRAE 90.1 (2007).

Chapter 3: Use and Occupancy Classification

306.2 Factory Industrial F-1 Moderate-Hazard Occupancy.

Factory industrial uses which are not classified as Factory Industrial F-2 Low Hazard shall be classified as F-1 Moderate Hazard and shall include, but not be limited to, the following:
Construction and agricultural machinery
Machinery

Use Group: F-1, Factory (moderate)
Square footage: Total 2,356 SF

Chapter 5: General Building Heights and Areas

TABLE 503
ALLOWABLE HEIGHT AND BUILDING AREAS
Height limitations shown as stories and feet above grade plane.
Area limitations as determined by the definition of "Area, building," per floor.
TYPE OF CONSTRUCTION - II - B

Group		
		55'
F-1	S	2
	A	15,500

Chapter 6: Types of Construction

Construction Type: 2-B, non-combustible unprotected
TABLE 601
FIRE-RESISTANCE RATING REQUIREMENTS FOR BUILDING ELEMENTS (hours)

Building Element:		Type II - B
Structural frame - including columns, girders, trusses:		0
Bearing walls	Exterior:	0
	Interior:	0
Nonbearing walls and partitions	Exterior:	See Table 602
Nonbearing walls and partitions	Interior:	0
Floor construction - Including supporting beams and joists:		0
Roof construction - including supporting beams and joists:		0

Chapter 10: Means of Egress

TABLE 1004.1.2 - MAXIMUM FLOOR AREA ALLOWANCES PER OCCUPANT

OCCUPANCY	FLOOR AREA IN SQ. FT. PER OCCUPANT
Agricultural building	300 gross
Industrial areas	100 gross
Accessory storage areas, mechanical equipment room	300 gross
Warehouses	500 gross

Occupant Load for Ringler Farms project = 2,356 SF ÷ 300 SF/occupant = 8 occupants

1014.1 Exit or exit access doorways required. Two exits or exit access doorways from any space shall be provided where one of the following conditions exists:

1. The occupant load of the space exceeds the values in Table 1014.1.
2. The common path of egress travel exceeds the limitations of Section 1013.3.
3. Where required by Sections 1014.3, 1014.4 and 1014.5.

Exception: Group I-2 occupancies shall comply with Section 1013.2.2.

TABLE 1014.1 - SPACES WITH ONE MEANS OF EGRESS

OCCUPANCY	MAXIMUM OCCUPANT LOAD
A, B, E, F, M, U	50
H-1, H-2, H-3	3
H-4, H-5, I-1, I-3, I-4, R	10
S	30

TABLE 1018.2 - BUILDINGS WITH ONE EXIT

OCCUPANCY UNITS)	MAXIMUM HEIGHT OF BUILDING ABOVE GRADE PLANE	MAXIMUM OCCUPANTS (OR DWELLING PER FLOOR AND TRAVEL DISTANCE
A, Bd, E, F, M, U	1 Story	50 occupants and 75 feet travel distance
H-2, H-3	1 Story	3 occupants and 25 feet travel distance
H-4, H-5, I, R	1 Story	10 occupants and 75 feet travel distance
Sa	1 Story	30 occupants and 100 feet travel distance
Bo, F, M, Sa	2 Stories	30 occupants and 75 feet travel distance
R-2	2 Stories	4 dwelling units and 50 feet travel distance

Chapter 11: Accessibility

TABLE 1106.1 - ACCESSIBLE PARKING SPACES

TOTAL PARKING SPACES PROVIDED	REQUIRED MINIMUM NUMBER OF ACCESSIBLE SPACES
1 to 25	1
26 to 50	2
51 to 75	3
76 to 100	4
101 to 150	5
151 to 200	6
201 to 300	7
301 to 400	8
401 to 500	9
501 to 1,000	2% of total
More than 1,000	20, plus one for each 100 over 1,000

Chapter 29: Plumbing Requirements

TABLE 2902.1 - MINIMUM NUMBER OF REQUIRED PLUMBING FACILITIES

CLASSIFICATION:	Factory and Industrial
USE GROUP:	F-1 and F-2
DESCRIPTION:	Structures in which occupants are engaged in work fabricating, assembly or processing of products or materials
WATER CLOSETS M & F:	1 per 100
LAVATORIES M & F:	1 per 100
BATHTUB OR SHOWER:	See Section 411 of the plumbing code
DRINKING FOUNTAINS: (SEE SECTION 410.1 OF THE PLUMBING CODE)	1 per 400
OTHER:	1 service sink

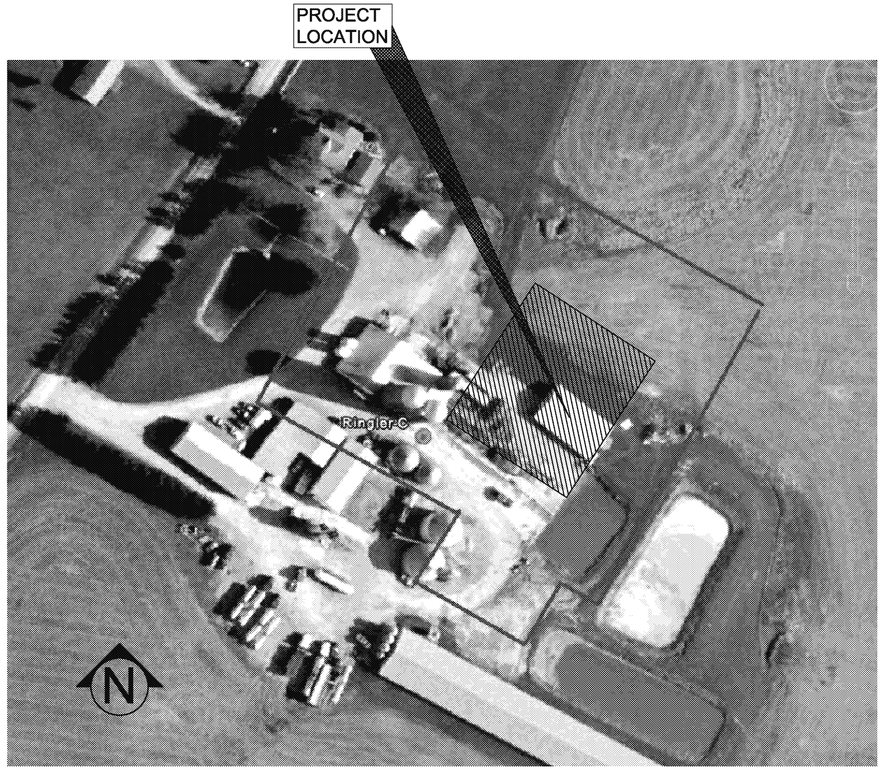

LOCATION MAP
SCALE: N.T.S.

DEVELOPER	ENGINEER	OWNER	PROCESS ENGINEER	SITE INFORMATION
Ringler Farms Energy, LLC 7624 Riverview Road Cleveland, OH 44131	quasar energy group 7624 Riverview Road Cleveland, OH 44131	Ringler Farms Energy, LLC 7624 Riverview Road Cleveland, OH 44131	quasar energy group 7624 Riverview Road Cleveland, OH 44131	Ringler Farms Energy, LLC 2277 County Road 156 Cardington, OH 43315-9742

AS BUILT SIGN OFF BOX	
TO THE BEST OF MY KNOWLEDGE THE DATA ON THESE DRAWINGS IS AN ACCURATE REPRESENTATION OF THE CURRENT FIELD CONDITIONS FOR THE PROJECT. I HAVE REVIEWED THIS DRAWING SET. I HAVE MARKED UP ANY CHANGES ON THESE SETS AND HEREBY SIGN OFF THAT THEY ARE ACCURATE.	
	NED MAST - MECHANICAL ENGINEER
	CHARLIE LONG - CONSTRUCTION SUPERINTENDENT
	MONTE KING - CONSTRUCTION MANAGER
	JIM GREEN - ELECTRIC OPERATIONS MANAGER
	CHRIS YOAKUM - SENIOR ELECTRICAL ENGINEER
	GILBERT ROSE - PLANT OPERATOR
	RANDY MINOR II - DESIGN ENGINEER
	ANDREA WILLIAMS-HACKWORTH - DESIGNER

quasar energy group

AS BUILT
quasar energy group

ANAEROBIC DIGESTION MERCHANT FACILITY

INDEX			INDEX		
#	PG#	TITTLE	#	PG#	TITTLE
1	CS	COVER SHEET	51.	A-8	HOUSE KEEPING PAD PLAN
2.	SD-1	EXISTING SITE CONDITIONS	52.	A-9	PAINTING PLAN
3.	SD-2	SITE LAYOUT PLAN	53.	A-10	PAINTING DETAILS
4.	SD-3	SITE GRADING PLAN	54.	TT-1	TRANSFER TANK ENCLOSURE DETAILS
5.	SD-4	SITE GRADING DETAILS	55.	H-1	ABBREVIATIONS, SYMBOLS, AND NOTES
6.	SD-5	SWPPP DETAILS	56.	H-2	HVAC PLAN, ELEVATIONS, AND NOTES
7.	SD-6	SWPPP DETAILS	57.	H-3	FLOOR RADIANT HEAT PIPING LAYOUT
8.	SD-7	SWPPP DETAILS	58.	H-4	HOT WATER HEATING, SCHEMATIC, AND DETAILS
9.	SD-8	SITE UTILITY PLAN	59.	P-1	ABBREVIATIONS, SYMBOLS, AND NOTES
10.	S-1	GENERAL NOTES AND ABBREVIATIONS	60.	P-2	PLUMBING PLAN AND DETAILS
11.	S-2	GENERAL NOTES CONTINUED	61.	P-3	SANITARY ISOMETRIC & PLUMBING FIXTURE SCHEDULE
12.	S-3	FOUNDATION PLAN AND CHP PIER DETAILS	62.	PP-1	PROCESS PIPING PLAN
13.	S-4	FOUNDATION DETAILS AND FLARE PAD DETAILS	63.	PP-2	PROCESS PIPING DETAILS
14.	S-5	SOLIDS PIT SECTIONS AND DETAILS	64.	PP-3	PROCESS PIPING DETAILS
15.	S-6	BIOMASS TANK STRUCTURAL FOUNDATION PLAN	65.	PP-4	PROCESS PIPING DETAILS
16.	S-7	BIOMASS EQUALIZATION TANK FOUNDATION PLAN AND DETAILS	66.	PP-5	TRANSFER TANK PROCESS PIPING DETAILS
17.	S-8	DIGESTER TANK STRUCTURAL FOUNDATION PLAN	67.	PP-6	LAGOON ENTRANCE DETAILS
18.	S-9	DIGESTER TANK STRUCTURAL FOUNDATION PLAN AND DETAILS	68.	E-1	LEGENDS, NOTES, AND PANEL SCHEDULES
19.	S-10	230K GAL. BIOMASS EQUALIZATION TANK ACCESSORY LOCATIONS	69.	E-2	ONE-LINE DIAGRAM
20.	S-11	750K GAL. DIGESTER TANK ACCESSORY LOCATIONS	70.	E-3	GROUNDING PLAN
21.	S-12	230K GAL. BIOMASS EQUALIZATION TANK STRUCTURAL SHOP DRAWING	71.	E-4	GROUNDING DETAILS
22.	S-13	230K GAL. BIOMASS EQUALIZATION TANK STRUCTURAL SHOP DRAWING	72.	E-5	LIGHTING PLAN, LIGHT FIXTURE SCHEDULE, AND LIGHTING CONTROL DIAGRAM
23.	S-14	230K GAL. BIOMASS EQUALIZATION TANK STRUCTURAL SHOP DRAWING	73.	E-6	POWER PLAN
24.	S-15	230K GAL. BIOMASS EQUALIZATION TANK STRUCTURAL SHOP DRAWING	74.	E-7	ENLARGED POWER PLAN
25.	S-16	230K GAL. BIOMASS EQUALIZATION TANK STRUCTURAL SHOP DRAWING	75.	E-8	CONDUIT SCHEDULE
26.	S-17	230K GAL. BIOMASS EQUALIZATION TANK STRUCTURAL SHOP DRAWING	76.	E-9	INSTRUMENTATION PLAN
27.	S-18	230K GAL. BIOMASS EQUALIZATION TANK STRUCTURAL SHOP DRAWING	77.	E-10	INSTRUMENTATION SCHEDULE
28.	S-19	230K GAL. BIOMASS EQUALIZATION TANK STRUCTURAL SHOP DRAWING	78.	E-11	INSTRUMENTATION ELEVATIONS
29.	S-20	230K GAL. BIOMASS EQUALIZATION TANK STRUCTURAL SHOP DRAWING	79.	E-12	HEAT TRACING PLAN
30.	S-21	230K GAL. BIOMASS EQUALIZATION TANK STRUCTURAL SHOP DRAWING	80.	E-13	ELECTRICAL SPECIFICATIONS
31.	S-22	230K GAL. BIOMASS EQUALIZATION TANK STRUCTURAL SHOP DRAWING	81.	E-14	TRANSFER PIT ELECTRICAL PLANS
32.	S-23	230K GAL. BIOMASS EQUALIZATION TANK STRUCTURAL SHOP DRAWING			
33.	S-24	230K GAL. BIOMASS EQUALIZATION TANK STRUCTURAL SHOP DRAWING			
34.	S-25	230K GAL. BIOMASS EQUALIZATION TANK STRUCTURAL SHOP DRAWING			
35.	S-26	750K GAL. DIGESTER TANK STRUCTURAL SHOP DRAWING			
36.	S-27	750K GAL. DIGESTER TANK STRUCTURAL SHOP DRAWING			
37.	S-28	750K GAL. DIGESTER TANK STRUCTURAL SHOP DRAWING			
38.	S-29	750K GAL. DIGESTER TANK STRUCTURAL SHOP DRAWING			
39.	S-30	750K GAL. DIGESTER TANK STRUCTURAL SHOP DRAWING			
40.	S-31	230K GAL. BIOMASS EQUALIZATION TANK INSULATION SHOP DRAWING			
41.	S-32	230K GAL. BIOMASS EQUALIZATION TANK INSULATION SHOP DRAWING			
42.	S-33	750K GAL. DIGESTER TANK INSULATION SHOP DRAWING			
43.	S-34	750K GAL. DIGESTER TANK INSULATION SHOP DRAWING			
44.	A-1	FLOOR PLAN			
45.	A-2	ROOF PLAN, REFLECTED CEILING PLAN, AND RESTROOM DETAILS			
46.	A-3	BUILDING ELEVATIONS			
47.	A-4	BUILDING ELEVATIONS			
48.	A-5	WALL SECTIONS AND WALL DETAILS			
49.	A-6	STAIR DETAILS			
50.	A-7	ROOM FINISH SCHEDULE, OPENING SCHEDULE, DOOR AND WINDOW SCHEULE			

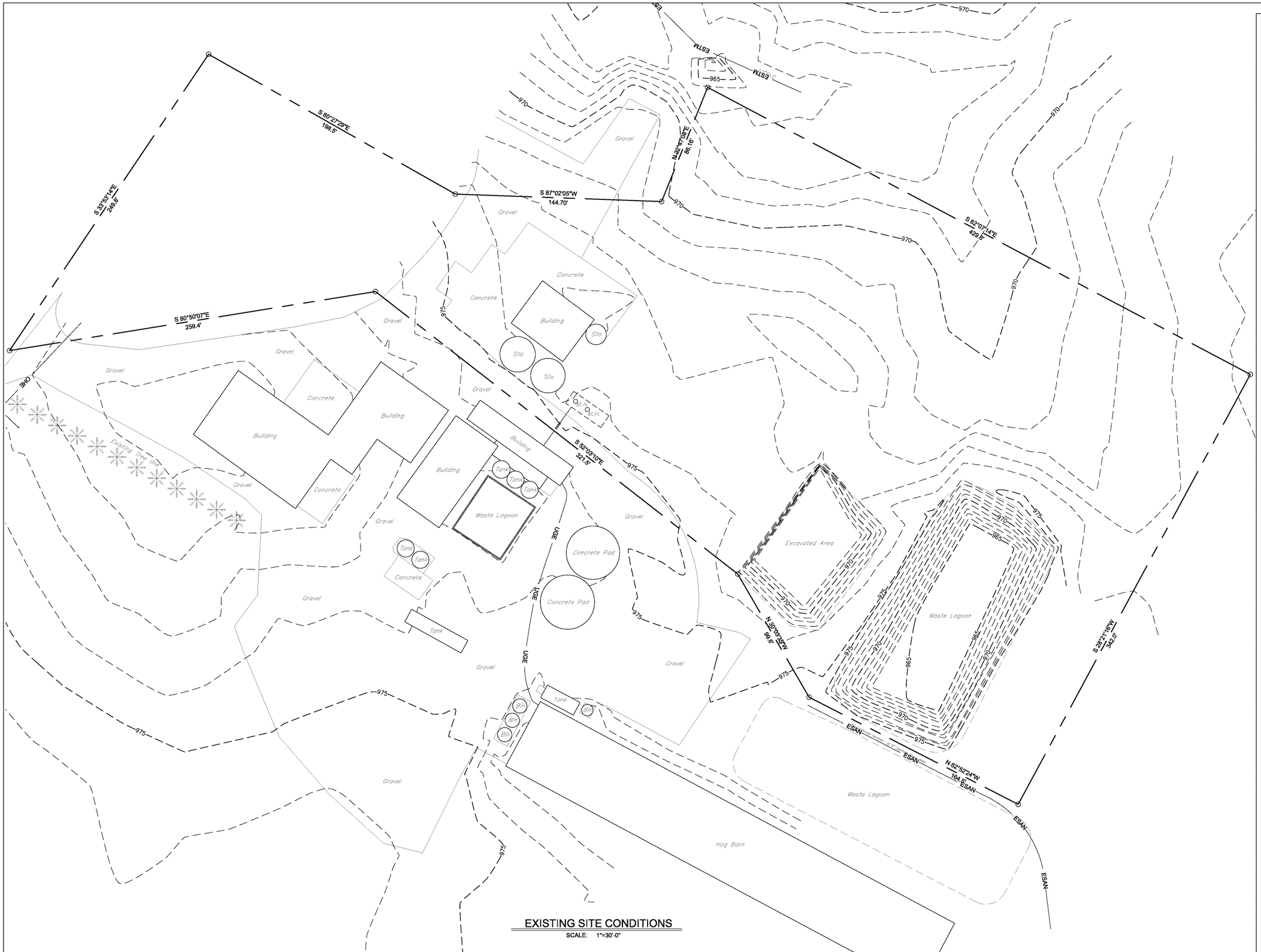

EXISTING SITE CONDITIONS

SCALE: 1"=30'-0"

quasar energy group

quasar energy group
7624 Riverview Road
PO Box 31023
Cleveland OH 44141
Phone: 216.986.9999

Stamp:

Scale: SEE DETAIL

This drawing contains valuable confidential and proprietary information that belongs to quasar energy group, llc ("quasar"), and is subject to a separate Confidentiality and Nondisclosure Agreement. quasar is the author and owner of this drawing, and retains all common law, statutory and other rights and privileges with respect hereto, including copyrights. The information contained herein may not at any time be used for any unauthorized purpose, nor reproduced by or provided to any third party, without the prior written consent of quasar.

STATE OF OHIO
ALAN R. JOHNSON
46333
REGISTERED
PROFESSIONAL ENGINEER

AS BUILT

Rev.	ECN Number	Date
2		
1		
0	AS BUILT	__/__/__

Drawing Name:
EXISTING SITE CONDITIONS

Project Name and Address:
0058-CAR-OH-11

RINGLER FARMS
ADS Facility
ecoFarmsystem 980

2277 County Road 156
Cardington, OH 43315-9742

Area:

Author: RAMII

Calculated:

Checked: RN

Sheet Number: SD-1

© 2012, Quasar Energy Group, LLC. All rights reserved.

P:\SBE Projects\0058-CAR-OH-11 - Ringler Farms\BUILDING DRAWINGS\CURRENT DRAWINGS (AS BUILT)\RINGLER FARMS (SD-1) EXISTING SITE CONDITIONS.dwg
11/15/2013 2:14 PM

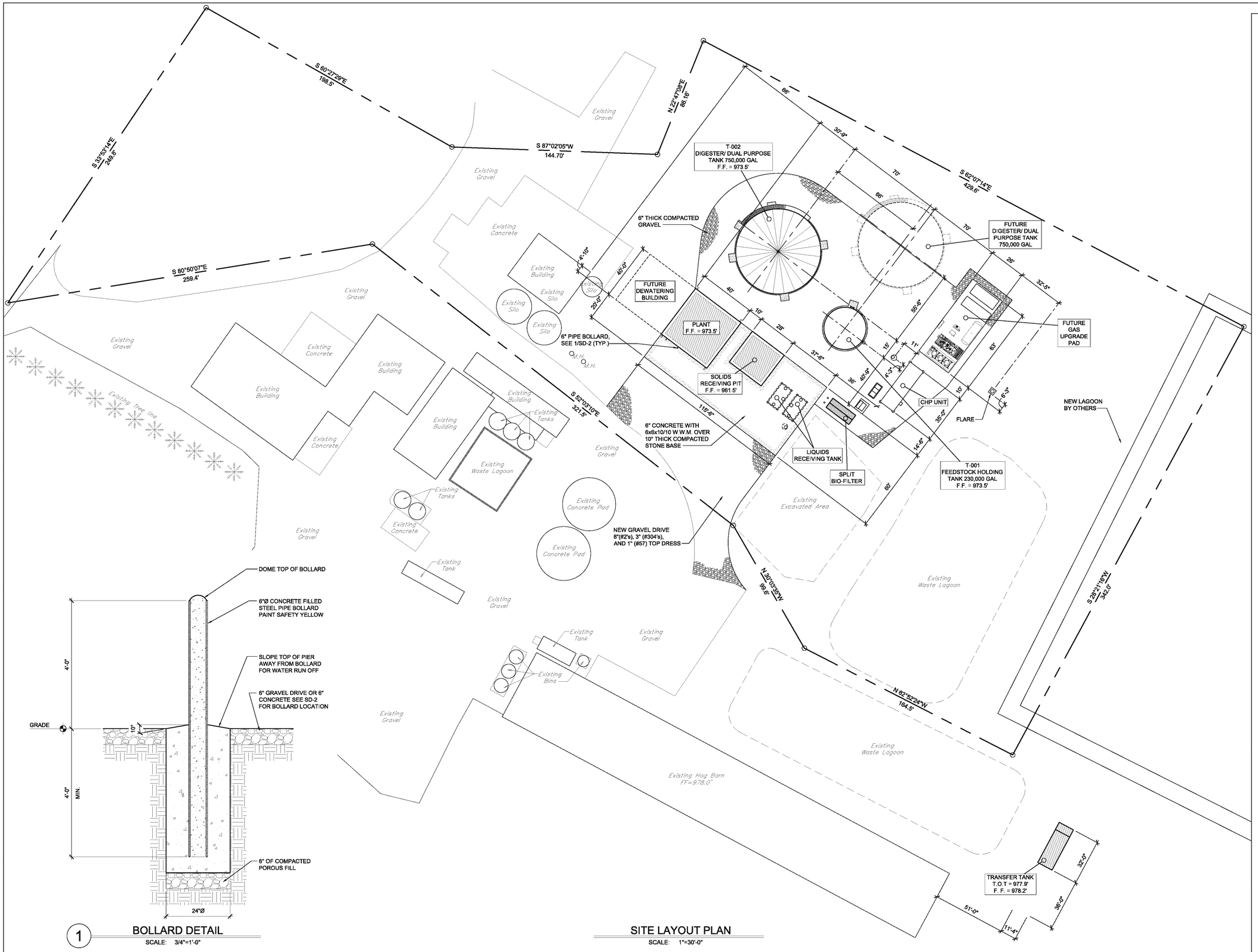

SITE LAYOUT PLAN

SCALE: 1"=30'-0"

1 BOLLARD DETAIL

SCALE: 3/4"=1'-0"

quasar energy group
7624 Riverview Road
PO Box 31023
Cleveland OH 44141
Phone: 216.986.9999

Stamp:

Scale: SEE DETAIL

This drawing contains valuable confidential and proprietary information that belongs to quasar energy group, llc ("quasar"), and is subject to a separate Confidentiality and Nondisclosure Agreement. quasar is the author and owner of this drawing, and retains all common law, statutory and other rights and privileges with respect hereto, including copyrights. The information contained herein may not at any time be used for any unauthorized purpose, nor reproduced by or provided to any third party, without the prior written consent of quasar.

STATE OF OHIO
ALAN R. JOHNSON
46333
REGISTERED PROFESSIONAL ENGINEER

AS BUILT

Rev.	ECN Number	Date
2		
1		
0	AS BUILT	__/__/__

Drawing Name:
SITE LAYOUT PLAN

Project Name and Address:
0058-CAR-OH-11

RINGLER FARMS
ADS Facility
ecoFarmsystem 980

2277 County Road 156
Cardington, OH 43315-9742

Area:

Author: RAMII

Calculated:

Checked: RN

Sheet Number: SD-2

© 2012, Quasar Energy Group, LLC. All rights reserved.

P:\SBE Projects\0058-CAR-OH-11 - Ringler Farms\BUILDING DRAWINGS\CURRENT DRAWINGS (AS BUILT)\RINGLER FARMS (SD-2) SITE LAYOUT.dwg
11/15/2013 2:14 PM

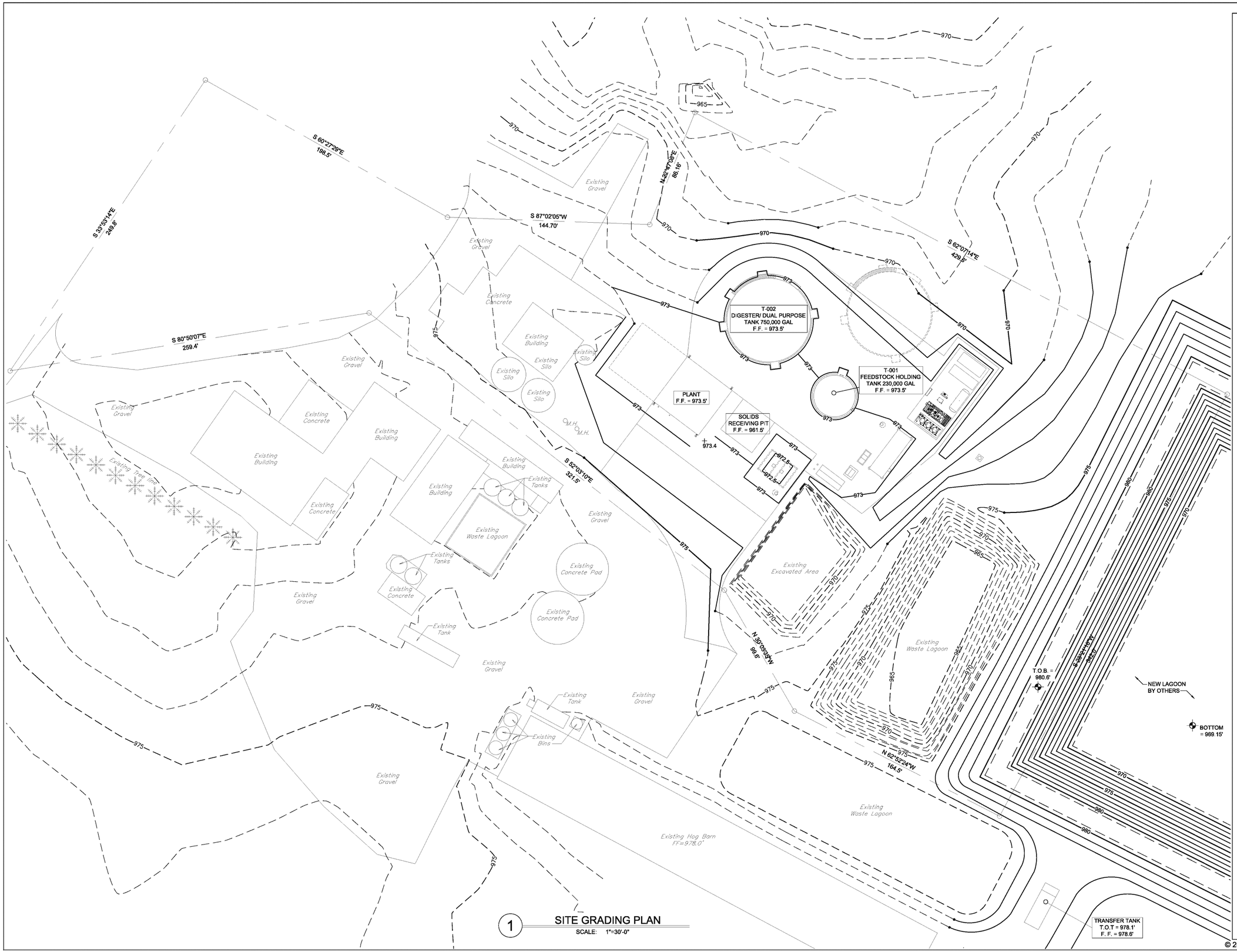

1 SITE GRADING PLAN
SCALE: 1"=30'-0"

quasar energy group
7624 Riverview Road
PO Box 31023
Cleveland OH 44141
Phone: 216.986.9999

Scale: SEE DETAIL

This drawing contains valuable confidential and proprietary information that belongs to quasar energy group, llc ("quasar"), and is subject to a separate Confidentiality and Nondisclosure Agreement. quasar is the author and owner of this drawing, and retains all common law, statutory and other rights and privileges with respect hereto, including copyrights. The information contained herein may not at any time be used for any unauthorized purpose, nor reproduced by or provided to any third party, without the prior written consent of quasar.

STATE OF OHIO
ALAN R. JOHNSON
46339
REGISTERED PROFESSIONAL ENGINEER

AS BUILT

Rev.	ECN Number	Date
2		
1		
0	AS BUILT	__/__/__

Drawing Name:
SITE GRADING PLAN

Project Name and Address:
0058-CAR-OH-11

RINGLER FARMS
ADS Facility
ecoFarmsystem 980

2277 County Road 156
Cardington, OH 43315-9742

Area:

Author:
—

Calculated:

Checked:
RN

Sheet Number:
SD-3

P:\SBE Projects\0058-CAR-OH-11 - Ringler Farms\BUILDING DRAWINGS\CURRENT DRAWINGS (AS BUILT)\RINGLER FARMS (SD-3) SITE GRADING.dwg
11/15/2013 2:15 PM

© 2012, Quasar Energy Group, LLC. All rights reserved.

SITE DESCRIPTION

Project Name and Location:

Ringler Farms
2277 County Road 156
Cardington, Ohio 43315-9742

Owner Name and Address:

quasar energy group, LLC
Bruce Bailey, CPESC
7624 Riverview Road
Cleveland, OH 44141

Description: (Purpose and Types of Soil Disturbing Activities)

Site has vegetation established on it. The proposed construction activity will not affect the run-off from the site.

Runoff Coefficient:

The site is currently graded to approximately final grade for the proposed project. The construction activities will not change the slopes, except where a berm enclosing the tanks will be placed. The berm will reduce run-off.

Site Area:

4.16 AC.

Soil Types and Classifications:

Give USGS Soil Classification of soil, multiple if appropriate. Reference geotech report and soil boring information.

Name of Receiving Waters:

The run-off from this site is directed to Whetstone Creek.

CONTROLS

Erosion and Sediment Controls:

Stabilization Practices

Temporary Stabilization - Stockpiled topsoil and disturbed areas of the site where construction activity is to cease for more than 21 days shall be stabilized with temporary seed and/or mulching no later than 14 days after the last construction activity in that area. The temporary seeding shall be applied per the temporary seeding specifications as shown on the following stormwater pollution prevention plans. Areas of the site to be paved will be temporarily stabilized by applying geotextile and stone subbase until pavement is applied.

Permanent Stabilization - Disturbed areas of the site where construction activities have been permanently ceased shall be stabilized with permanent seeding no later than 14 days after the last construction activity. The permanent seed mix shall conform with the permanent seeding specifications, as shown on sheet SD-5.

Stormwater Management - Stormwater drainage to be provided by surface swales, catch basins, and storm sewers for developed areas. The areas which are not developed will be graded at less than 4:1 and have permanent seeding or plantings.

OTHER CONTROLS

Waste Disposal:

Solid Waste Materials

All solid waste materials are to be collected and stored in a secure metal dumpster with lid. Dumpster is to be rented from a licensed solid waste management company. The dumpster shall meet all local, state, and federal regulations pertaining to solid waste management. All trash and construction debris from the site shall be deposited in the dumpster or transported from site by licensed waste management company in a legal manner. The dumpster is to be emptied a minimum of twice per week or as necessary, and the trash is be hauled to a permitted landfill. No construction waste materials are be buried onsite. All personnel need be instructed on proper procedure for waste disposal. Notices stating proper practices shall be posted in the field office trailer. The individual managing the site construction operations will be responsible for overseeing that proper procedures are followed.

Hazardous Waste

All hazardous waste materials shall be disposed of in a manner as specified by the manufacturer and by local, state, and federal regulations. Site construction personnel are be instructed in these procedures. The individual in charge of managing site construction operations shall be responsible for overseeing that all required hazardous waste handling procedures are followed.

Sanitary Waste

All sanitary waste is to be collected from all portable units a minimum of three times per week by a licensed sanitary waste management contractor, or as required by the local department of health.

Offsite Vehicle Tracking

A stabilized construction entrance shall be provided to help reduce vehicle tracking of sediments. All paved streets adjacent to the site are be swept daily to remove any excess material tracked from the site. A tire wash is to be installed if deemed necessary by local officials. Dump trucks hauling material from the construction site need to be covered with a tarpaulin.

TIMING OF CONTROLS/MEASURES

As indicated in the Sequence of Major Activities, stabilized construction entrance, silt fence, and sediment basin will be constructed prior to clearing or grading of any other portions of the site. Areas where construction activity temporarily ceases for more than 21 days will be stabilized with a temporary seed and mulch within 7 days of the last disturbance. Once construction activity ceases permanently in an area, that area will be stabilized with permanent seed and mulch. After the entire site is stabilized, the accumulated sediment will be removed from the basin.

MAINTENANCE/INSPECTION PROCEDURES

Erosion and Sediment Control Inspection and Maintenance Practices:

1. All control measures will be inspected at least once each week and following any storm event of 0.5 inches or greater.

2. All measures shall be maintained in proper working order; if a repair is necessary, it is to be initiated within 24 hours of report.

3. Built up sediment shall be removed from silt fence when it has reached one-third the height of the fence.

4. Silt fence to be inspected to determine sediment depth, tears, fabric securely attached to the posts, and posts are firmly in the ground.

5. Temporary/permanent seeding and planting are to be inspected on a weekly basis for bare spots, washouts, and healthy growth.

6. A maintenance inspection report is to be completed after each inspection.

7. The site superintendent will select individuals to be responsible for inspections, maintenance, repair activities, and preparing inspection and maintenance report.

Non-Stormwater Discharges:

It is expected that the following non-storm discharges are likely to occur during construction:

1. Water from water line flushings.

2. Pavement wash waters (where no spills or leaks of toxic or hazardous materials have occurred).

3. Uncontaminated groundwater (from dewatering excavation).

INVENTORY FOR POLLUTION PREVENTION PLAN

The materials or substances listed below are expected to be present onsite during construction:

1. Concrete
2. Fertilizers
3. Detergents
4. Petroleum based products
5. Paints and varnishes
6. Cleaning solvents
7. Metal studs
8. Lumber and timber
9. Asphalt
10. Masonry block
11. Tar
12. Roofing materials
13. Other potential materials not listed

SPILL PREVENTION

Material Management Practices: The following are the material management practices that will be used to reduce the risk of spills or other accidental exposure of materials and substances to stormwater runoff.

Good Housekeeping:

The following good housekeeping practices will be followed onsite during the construction project. An effort will be made to store only enough product required to do the job. All materials stored onsite shall be stored in a neat, orderly manner in appropriate containers and, if possible, under a roof or other secure enclosure. Products shall also be kept in their original containers with the original manufacturer's label. Substances are not be mixed with one another unless recommended by the manufacturer. Whenever possible, all of a product will be used up before disposing of the container. Manufacturers' recommendations for proper use and disposal shall be followed. The site superintendent will inspect daily to ensure proper use and disposal of materials onsite.

Hazardous Products:

The following practices are used to reduce the risks associated with hazardous materials. All products are to be kept in original containers unless they are not resealable. Original labels and material safety data must be retained as they contain important product information. If surplus product must be disposed of, manufacturers' or local, state, and federal recommended procedures for proper disposal shall be followed.

SOIL PROTECTION CHART

STABILIZATION TYPE	J	F	M	A	M	J	J	A	S	O	N	D
PERMANENT SEEDING			●	●	●	*	*	*	●	●		
DORMANT SEEDING	●	●	●							●	●	●
TEMPORARY SEEDING			●	●	●	*	*	*	●	●		
SODDING			**	**	**	**	**	**	**			
MULCHING	●	●	●	●	●	●	●	●	●	●	●	●

* - IRRIGATION NEEDED

** - IRRIGATION NEEDED FOR 2-3 WEEKS AFTER SOD IS APPLIED

GENERAL NOTES:

1. A Notice of Intent (NOI) must be submitted to the Ohio EPA for NPDES Permit 45 days prior to the start of clearing or grading operation.

2. All construction activities must comply with Franklin County Soil and Water Conservation District regulations.

3. All erosion and sediment control practices must meet the standards and specifications of the Ohio Rainwater and Land Development Handbook (1996). Other erosion control items may be necessary due to environmental conditions.

4. Regular inspection and maintenance must be provided for all erosion and sediment control practices.

5. Permanent records of maintenance and inspections must be kept throughout the construction period. Inspections must be made a minimum of once every 7 days and immediately after storm events greater than 0.5 inches of rain in a 24 hour period.

6. All storm inlets/catch basins that are made operational during construction shall be protected so that sediment-laden water will not enter the conveyance system without first being filtered or otherwise treated to remove sediment.

PRODUCT SPECIFIC PRACTICES

The following product specific practices shall be followed while onsite:

Petroleum Products - All onsite vehicles will be monitored for leaks and receive regular preventive maintenance to reduce the chance of leakage. Petroleum products must be stored in approved sealed containers which are clearly labeled. Any asphalt substances used onsite are to be applied according to the manufacturer's recommendations.

Fertilizers - Fertilizers used shall be applied in the minimum amounts recommended by the manufacturer. Once applied, fertilizer will be worked into the soil to limit exposure to storm water. Storage of all material shall be in a covered shed. The contents of any partially used bags of fertilizer must be transferred to a sealable container, made of a suitable material to prevent spills.

Paints - All containers shall be tightly sealed and properly stored when not in use. Excess paint is not be discharged to the storm sewer system, but properly disposed of according to manufacturers' instructions or state, local, or federal regulations.

Concrete Trucks - Concrete trucks will not be permitted to wash out or discharge surplus concrete or drum wash water on the site.

Spill Control Practices:

In addition to the good housekeeping and material management practices discussed in previous sections of this plan, the following practices shall be followed for spill prevention and cleanup.

1. The manufacturers' recommended methods for spill cleanup must posted at all times and site personnel shall be aware of the procedures and location of information and cleanup supplies.

2. The materials and equipment necessary for spill cleanup will be kept in the material storage area onsite. Equipment and materials shall include but not be limited to brooms, dust pans, mops, rags, gloves, goggles, industrial spill absorption material, sand, sawdust, and plastic and metal trash containers specifically for this purpose.

3. All spills will are to be cleaned up immediately after discovery. The spill area will be kept well ventilated and personnel will wear appropriate protective clothing and equipment to prevent injury from contact with a hazardous substance.

4. Toxic or hazardous material spills or exposures must be reported to the appropriate authorities immediately, regardless of size. The spill prevention plan shall be updated to include procedures for preventing any reoccurrence along with proven successful clean-up procedures.

5. The names of all personnel given the responsibility of hazardous material cleanups shall be posted in the material storage area and in the construction office.

quasar energy group
7624 Riverview Road
PO Box 31023
Cleveland OH 44141
Phone: 216.986.9999

Scale: NONE

This drawing contains valuable confidential and proprietary information that belongs to quasar energy group, llc ("quasar"), and is subject to a separate Confidentiality and Nondisclosure Agreement. quasar is the author and owner of this drawing, and retains all common law, statutory and other rights and privileges with respect hereto, including copyrights. The information contained herein may not at any time be used for any unauthorized purpose, nor reproduced by or provided to any third party, without the prior written consent of quasar.

STATE OF OHIO
ALAN R. JOHNSON
46333
REGISTERED
PROFESSIONAL ENGINEER

AS BUILT

Rev.	ECN Number	Date
2		
1		
0	AS BUILT	__/__/__

Drawing Name:
SWPPP DETAILS

Project Name and Address:
0058-CAR-OH-11

RINGLER FARMS
ADS Facility
ecoFarmsystem 980

2277 County Road 156
Cardington, OH 43315-9742

Area:

Author:
__

Calculated:

Checked:
RN

Sheet Number:
SD-4

© 2012, Quasar Energy Group, LLC. All rights reserved.

P:\SBE Projects\0058-CAR-OH-11 - Ringler Farms\BUILDING DRAWINGS\CURRENT DRAWINGS (AS BUILT)\RINGLER FARMS (SD-4,5,6,7) SITE DETAILS.dwg
11/15/2013 2:13 PM

Any disturbed area within 50 feet of a stream and not at final grade.	Within 2 days of the most recent disturbance, if that area will remain idle for more than 21 days.
For all construction activities, any disturbed area, including stockpiles, that will be dormant for more than 21 days but less than one year, and not within 50 feet of a stream.	Within 7 days of the most recent disturbance within the area.
Disturbed areas that will be idle over the winter.	Prior to November 1.

NOTE: Where vegetative stabilization techniques may cause structural instability or are otherwise unobtainable, alternative stabilization techniques must be employed. These techniques may include mulching, erosion matting, or placement of stone.

PERMANENT SEEDING

Permanent seeding includes the seedbed preparation, seeding, and the establishment of perennial vegetation used to permanently stabilize soil, prevent sediment pollution, reduce runoff by promoting infiltration, and provide stormwater quality benefits offered by dense vegetation.

Specifications for Permanent Seeding

Site Preparation

1. A subsoiler, plow or other implement shall be used to reduce soil compaction and allow maximum infiltration. (Maximizing infiltration will help control both runoff rate and water quality.) Subsoiling should be done when the soil moisture is low enough to allow the soil to crack or fracture. Subsoiling shall not be done on slip-prone areas where soil preparation should be limited to what is necessary for establishing vegetation.
2. The site shall be graded as needed to permit the use of conventional equipment for seedbed preparation and seeding.
3. Resoil shall be applied where needed to establish vegetation.

Seedbed Preparation

1. Lime--Agricultural ground limestone shall be applied to acid soil as recommended by a soil test. In lieu of a soil test, lime shall be applied at the rate of 100 lb. per 1,000 square feet or 2 tons per acre.
2. Fertilizer--Fertilizer shall be applied as recommended by a soil test. In lieu of a soil test, fertilizer shall be applied at a rate of 12 lb. per 1,000 square feet or 500 lb. per acre of 10-10-10 or 12-12-12 analysis.
3. The lime and fertilizer shall be worked into the soil with a disk harrow, spring-tooth harrow, or other suitable field implement to a depth of 3 inches. On sloping land, the soil shall be worked on the contour.

Seeding Dates and Soil Conditions

Seeding should be done March 1 to May 31 or August 1 to September 30. These seeding dates are ideal but, with the use of additional mulch and irrigation, seedings may be made any time throughout the growing season. Tillage/seedbed preparation should be done when the soil is dry enough to crumble and not form ribbons when compressed by hand. For winter seeding, see the following section on dormant seeding.

Dormant Seedings

1. Seedings shall not be planted from October 1 through November 20. During this period, the seeds are likely to germinate but probably will not be able to survive the winter.
2. The following methods may be used for "Dormant Seeding":

From October 1 through November 20, prepare the seedbed, add the required amounts of lime and fertilizer, then mulch and anchor. After November 20, and before March 15, broadcast the selected seed mixture. Increase the seeding rates by 50% for this type of seeding.

From November 20 through March 15, when soil conditions permit, prepare the seedbed, lime and fertilizer, apply the selected seed mixture, mulch and anchor. Increase the seeding rates by 50% for this type of seeding.

Apply seed uniformly with a cyclone seeder, drill, cultipacker seeder, or hydro-seeded (slurry may include seed and fertilizer) on a firm, moist seedbed.

Where feasible, except when a cultipacker type seeder is used, the seedbed should be firmed following seeding operations with a cultipacker, roller, or light drag. On sloping land, seeding operations should be on the contour where feasible.

1. Mulch material shall be applied immediately after seeding. Seedings made during optimum seeding dates and with favorable soil conditions and on very flat areas may not need mulch to achieve adequate stabilization. Dormant seeding shall be mulched.

Straw--If straw is used, it shall be unrotted small-grain straw applied at the rate of 2 tons per acre or 90 lb. per 1,000 square feet (two to three bales). The mulch shall be spread uniformly by hand or mechanically so the soil surface is covered. For uniform distribution of hand-spread mulch, divide area into approximately 1,000 square feet sections and spread two 45 lb. bales of straw in each section.

Hydroseeders--If wood-cellulose fiber is used, it shall be used at 2,000 lb. per acre or 46 lb. per 1,000 square feet.

Other--Other acceptable mulches include mulch mattings applied according to manufacturer's recommendations or wood chips applied at 6 tons per acre.

3. Straw Mulch Anchoring Methods

Straw mulch shall be anchored immediately to minimize loss by wind or water.

Mechanical--A disk, crimper, or similar type tool shall be set straight to punch or anchor the mulch material into the soil. Straw mechanically anchored shall not be finely chopped but, generally, be left longer than 6 inches.

Mulch Nettings--Nettings shall be used according to the manufacturer's recommendations. Netting may be necessary to hold mulch in place in areas of concentrated runoff and on critical slopes.

Asphalt Emulsion--Asphalt shall be applied as recommended by the manufacturer or at the rate of 160 gallons per acre.

Synthetic Binders--Synthetic binders such as Acrylic DLR (Agri-Tac), DCA-70, Petroset, Terra Tack or equal may be used at rates recommended by the manufacturer.

Wood-Cellulose Fiber--Wood-cellulose fiber binder shall be applied at a net dry weight of 750 lb. per acre. The wood cellulose fiber shall be mixed with water, and the mixture shall contain a maximum of 50 lb. per 100 gallons of wood cellulose fiber.

Permanent Seeding			
Seed Mix	Seeding Rate		Notes:
	lb./ac.	lb./1,000 ft.^{2}	
General Use			
Creeping Red Fescue Domestic Ryegrass Kentucky Bluegrass	20-40 10-20 10-20	1/2 - 1 1/4 - 1/2 1/4 - 1/2	
Tall Fescue	40	1	
Dwarf Fescue	40	1	
Steep Banks or Cut Slopes			
Tall Fescue	40	1	
Crown Vetch Tall Fescue	10 20	1/4 1/2	Do not seed later than August
Flat Pea Tall Fescue	20 20	1/2 1/2	Do not seed later than August
Road Ditches and Swales			
Tall Fescue	40	1	
Dwarf Fescue Kentucky Bluegrass	90 5	2 1/4	
Lawn			
Kentucky Bluegrass Perennial Ryegrass	60 60	1 1/2 1 1/2	
Kentucky Bluegrass Creeping Red Fescue	60 60	1 1/2 1 1/2	For shaded areas
Note: Other approved seed species may be substituted.			

Specifications for Maintenance of Permanent Seeding

1. Permanent seeding shall not be considered established for at least 1 full year from the time of planting. Seeded areas shall be inspected for failure and vegetation reestablished as needed. Depending on site conditions, it may be necessary to irrigate, fertilize, overseed, or reestablish plantings in order to provide permanent vegetation for adequate erosion control.
2. Maintenance fertilization rates shall be established by soil test recommendations or by using the rates shown in the following table.

Maintenance for Permanent Seedings Fertilization and Mowing					
Mixture	Formula	lb./ac.	lb./1,000 ft.^{2}	Time	Mowing
Creeping Red Fescue Ryegrass Kentucky Bluegrass	10-10-10	500	12	Fall, yearly or as needed.	Not closer than 3"
Tall Fescue	10-10-10	500	12		Not closer than 4"
Dwarf Fescue	10-10-10	500	12		Not closer than 2"
Crown Vetch Fescue	0-20-20	400	10	Spring, yearly following establish-ment and every 4-7 yr. thereafter	Do not mow
Flat Pea Fescue	0-20-20	400	10		Do not mow
Note: Following soil test recommendations is preferred to fertilizer rates shown above.					

Seeding Dates	Species	Lb./1,000 ft.	Per Ac.
March 1 to August 15	Oats Tall Fescue Annual Ryegrass	3 1 1	4 bushel 40 lb. 40 lb.
	Perennial Ryegrass Tall Fescue Annual Ryegrass	1 1 1	40 lb. 40 lb. 40 lb.
August 16 to November 1	Rye Tall Fescue Annual Ryegrass	3 1 1	2 bushel 40 lb. 40 lb.
	Wheat Tall Fescue Annual Ryegrass	3 1 1	2 bushel 40 lb. 40 lb.
	Perennial Ryegrass Tall Fescue Annual Ryegrass	1 1 1	40 lb. 40 lb. 40 lb.
November 1 to Spring Seeding	Use mulch only, sodding practices or dormant seeding.		
Note: Other approved seed species may be substituted.			

1. Structural erosion and sediment-control practices such as diversions and sediment traps shall be installed and stabilized with temporary seeding prior to grading the rest of the construction site.
2. Temporary seed shall be applied between construction operations on soil that will not be graded or reworked for 45 days or more. These idle areas should be seeded as soon as possible after grading or shall be seeded within 7 days. Several applications of temporary seeding are necessary on typical construction projects.
3. The seedbed should be pulverized and loose to ensure the success of establishing vegetation. However, temporary seeding shall not be postponed if ideal seedbed preparation is not possible.
4. Soil Amendments--Applications of temporary vegetation shall establish adequate stands of vegetation which may require the use of soil amendments. Soil tests should be taken on the site to predict the need for lime and fertilizer.
5. Seeding Method--Seed shall be applied uniformly with a cyclone seeder, drill, cultipacker seeder, or hydroseeder. When feasible, seed that has been broadcast shall be covered by raking or dragging and then lightly tamped into place using a roller or cultipacker. If hydroseeding is used, the seed and fertilizer will be mixed on site, and the seeding shall be done immediately and without interruption.

Mulching Temporary Seeding

1. Applications of temporary seeding shall include mulch which shall be applied during or immediately after seeding. Seedings made during optimum seeding dates and with favorable soil conditions and on very flat areas may not need mulch to achieve adequate stabilization.
2. Materials:
   - Straw--If straw is used, it shall be unrotted small-grain straw applied at the rate of 2 tons per acre or 90 lb. per 1,000 square feet (two to three bales). The mulch shall be spread uniformly by hand or mechanically so the soil surface is covered. For uniform distribution of hand-spread mulch, divide area into approximately 1,000 square foot sections and spread two 45 lb. bales of straw in each section.
   - Hydroseeders--If wood-cellulose fiber is used, it shall be used at 2,000 lb. per acre or 46 lb. per 1,000 square feet.
   - Other--Other acceptable mulches include mulch mattings applied according to manufacturer's recommendations or wood chips applied at 6 tons per acre.
3. Straw mulch shall be anchored immediately to minimize loss by wind or water.

Anchoring Methods:

Mechanical--A disk, crimper, or similar type tool shall be set straight to punch or anchor the mulch material into the soil. Straw mechanically anchored shall not be finely chopped but, generally, be left longer than 6 inches.

- Mulch Nettings--Nettings shall be used according to the manufacturer's recommendations. Netting may be necessary to hold mulch in place in areas of concentration runoff and on critical slopes.
- Asphalt Emulsion--Asphalt shall be applied as recommended by the manufacturer or at the rate of 160 gallons per acre.
- Synthetic Binders--Synthetic binders such as Acrylic DLR (Agri-Tac), DCA-70, Petroset, Terra Tack or equal may be used at rates recommended by the manufacturer.

Wood-Cellulose Fiber--Wood-cellulose fiber binder shall be applied at a net dry weight of 750 lb. per acre. The wood-cellulose fiber shall be mixed with water, and the mixture shall contain a maximum of 50 lb. per 100 gallons.

quasar energy group
7624 Riverview Road
PO Box 31023
Cleveland OH 44141
Phone: 216.986.9999

Scale: NONE

This drawing contains valuable confidential and proprietary information that belongs to quasar energy group, llc ("quasar"), and is subject to a separate Confidentiality and Nondisclosure Agreement. quasar is the author and owner of this drawing, and retains all common law, statutory and other rights and privileges with respect hereto, including copyrights. The information contained herein may not at any time be used for any unauthorized purpose, nor reproduced by or provided to any third party, without the prior written consent of quasar.

STATE OF OHIO
ALAN R. JOHNSON
46333
REGISTERED PROFESSIONAL ENGINEER

AS BUILT

Rev.	ECN Number	Date
2		
1		
0	AS BUILT	__/__/__

Drawing Name:
SWPPP DETAILS

Project Name and Address:
0058-CAR-OH-11

RINGLER FARMS
ADS Facility
ecoFarmsystem 980

2277 County Road 156
Cardington, OH 43315-9742

Area:
Author: —
Calculated:
Checked: RN
Sheet Number: SD-5

© 2012, Quasar Energy Group, LLC. All rights reserved.

P:\SBE Projects\0058-CAR-OH-11 - Ringler Farms\BUILDING DRAWINGS\CURRENT DRAWINGS (AS BUILT)\RINGLER FARMS (SD-4,5,6,7) SITE DETAILS.dwg
11/15/2013 2:12 PM

TREE PRESERVATION AREA

Description

Trees that exist on-site prior to development may be protected so that will continue to survive after construction. Tree preservation may be used to protect areas of forest such as buffers strips along streams or to protect individual specimen trees.

Specifications for Tree Preservation Area

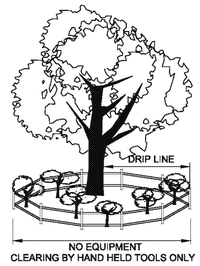

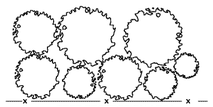

Fence shall be two strand high tensile wire, snow fence or plastic safety fence and metal fence posts.

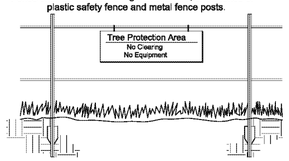

Specifications for Tree Preservation Area

1. Tree preservation areas shall be fenced prior to beginning clearing operations.
2. Fence materials shall be metal fence posts with two stands of high tensile wire, plastic fence or snow fence.
3. Signage shall clearly identify the tree protection area and state that no clearing or equipment is allowed within it.
4. Fence shall remain around tree protection areas until after final grading has been completed.
5. Fence shall be placed as shown on plans and beyond the drip line or canopy of trees to be protected.
6. If any clearing is done around specimen trees it shall be done by cutting at ground level with hand held tools and shall not be grubbed or pulled out. No clearing shall be done in buffer strips or other preserved forested areas.

STORM DRAIN INLET PROTECTION

Description

Storm drain inlet protection consists of a geotextile barrier supported around or across a storm drain inlet. It is used to prevent sediment-laden water from entering a storm drain system. It reduces the rate at which sediment-laden water may enter an inlet, thereby causing ponding and settling of sediment.

Specifications for Curb Inlet Protection

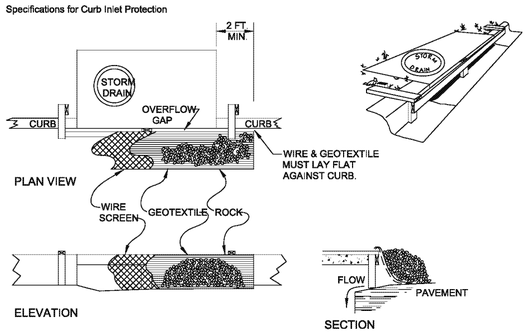

CHECK DAM

Description

Check dams are small rock dams construed in swales, grassed waterways or diversions. They reduce the velocity of concentrated flows, thereby reducing erosion within the swale or waterway. While this practice often traps some sediment, its trapping efficiency is extremely poor, thus, it should not be used as a sediment trapping practice.

Specifications for Check Dam

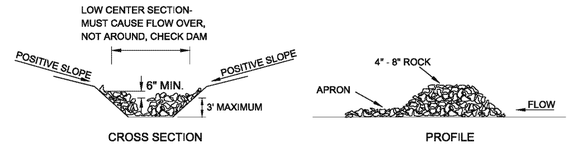

Specifications for Check Dam

1. The check dam shall be constructed of 4-8-in.-diameter stone, placed so that it completely covers the width of the channel.
2. The top of the check dam shall be constructed so that the center is approximately 6 in. lower than the outer edges, so water will flow across the center and not around the ends.
3. The maximum height of the check dam at the center of the weir shall not exceed 3 ft.
4. Spacing between dams shall be as shown in the plans or by the following table:

Check Dam Spacing				
Dam Height (ft.)	Channel Slope			
	< 5%	5 - 10%	10 - 15%	15 - 20%
1	65 ft.	30 ft.	20 ft.	15 ft.
2	130 ft.	65 ft.	40 ft.	30 ft.
3	200 ft.	100 ft.	65 ft.	50 ft.

Specifications for Inlet Protection in Swales, Ditch Lines or Yard Inlets

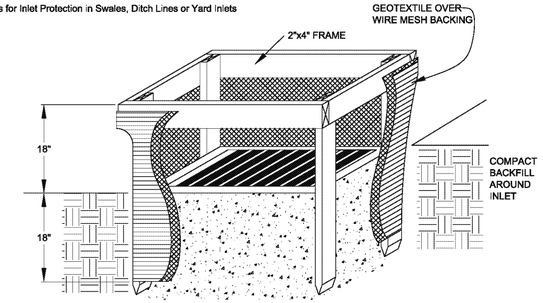

Specifications for Inlet Protection in Swales, Ditch Lines or Yard Inlets

1. Inlet protection shall be constructed either before upslope land disturbance begins or before the storm drain becomes operational.
2. The earth around the inlet shall be excavated completely to a depth at least 18 inches.
3. The wooden frame shall be constructed of 2-by-4-inch construction-grade lumber. The 2-by-4-inch posts shall be driven 1 foot into the ground at four corners of the inlet and the top portion of 2-by-4-inch frame assembled using the overlap joint shown. The top of the frame shall be at least 6 inches below adjacent roads if ponded water would pose a safety hazard to traffic.
4. Wire mesh shall be of sufficient strength to support fabric with water fully impounded against it. It shall be stretched tightly around the frame and fastened securely to the frame.
5. Geotextile shall have an equivalent opening size of 20-40 sieve and be resistant to sunlight. It shall be stretched tightly around the frame and fastened securely. It shall extend from the top of the frame to 18 inches below the inlet notch elevation. The geotextile shall overlap across one side of the inlet so the ends of the cloth are not fastened to the same post.
6. Backfill shall be placed around the inlet in compacted 6 inch layers until the earth is even with notch elevation on ends and top elevation on sides.
7. A compacted earth dike or a check dam shall be constructed in the ditch line below the inlet if the inlet is not in a depression and if runoff bypassing the inlet will not flow to a settling pond. The top of earth dikes shall be at least 6 inches higher than the top of the frame.

DANDY BAG ®

Installation and Maintenance Guidelines

LOCATION: TO BE USED ON ALL INLETS OR CATCHBASINS IN PAVED AREAS.

Installation: The empty Dandy Bag® should be placed over the grate as the grate stands on end. If using optional oil absorbents; place absorbent pillow in pouch, on the bottom (below-grade side) of the unit. Attach absorbent pillow to tether loop. Tuck the enclosure flap inside to completely enclose the grate. Holding the lifting devices (do not rely on lifting devices to support the entire weight of the grate), place the grate into its frame.

Maintenance: Remove all accumulated sediment and debris from surface and vicinity of unit after each storm event. Remove sediment that has accumulated within the containment area of the Dandy Bag® as needed. If using optional oil absorbents; remove and replace absorbent pillow when near saturation.

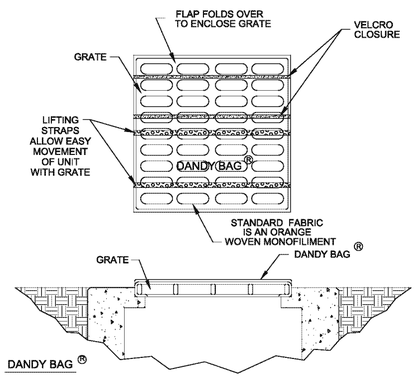

CONCRETE WASHOUT AREA

Description

A concrete wash out area is a stabilized lined collection area where trucks, pans and tools can be washed off after working with concrete.

Notes

1. Final location and size to be determined in the field.
2. A concrete washout sign shall be installed within 30 feet of the temporary concrete washout facility. The sign shall be a min. of 24"x24" with 4" min. letter height mounted 72" min. above grade.
3. The concrete shall be repaired or replaced as necessary to maintain it's functionality.

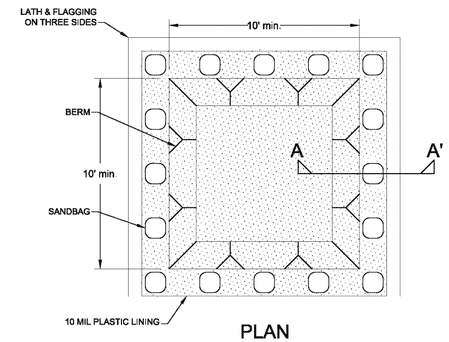

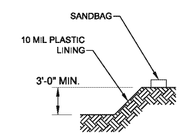

quasar energy group
7624 Riverview Road
PO Box 31023
Cleveland OH 44141
Phone: 216.986.9999

Scale: NONE

This drawing contains valuable confidential and proprietary information that belongs to quasar energy group, llc ("quasar"), and is subject to a separate Confidentiality and Nondisclosure Agreement. quasar is the author and owner of this drawing, and retains all common law, statutory and other rights and privileges with respect hereto, including copyrights. The information contained herein may not at any time be used for any unauthorized purpose, nor reproduced by or provided to any third party, without the prior written consent of quasar.

STATE OF OHIO
ALAN R. JOHNSON
46333
REGISTERED PROFESSIONAL ENGINEER

AS BUILT

Rev.	ECN Number	Date
2		
1		
0	AS BUILT	__/__/__

Drawing Name:
SWPPP DETAILS

Project Name and Address:
0058-CAR-OH-11

RINGLER FARMS
ADS Facility
ecoFarmsystem 980

2277 County Road 156
Cardington, OH 43315-9742

Area:

Author:
—

Calculated:

Checked:
RN

Sheet Number:
SD-6

© 2012, Quasar Energy Group, LLC. All rights reserved.

P:\SBE Projects\0058-CAR-OH-11 - Ringler Farms\BUILDING DRAWINGS\CURRENT DRAWINGS (AS BUILT)\RINGLER FARMS (SD-4,5,6,7) SITE DETAILS.dwg
11/15/2013 2:09 PM

Description

Silt fence is a sediment-trapping practice utilizing a geotextile fence, topography and vegetation to cause sediment deposition. Silt fence reduces runoff's ability to transport sediment by ponding runoff and dissipating small rills of concentrated flow into uniform sheet flow.

Specifications for Silt Fence

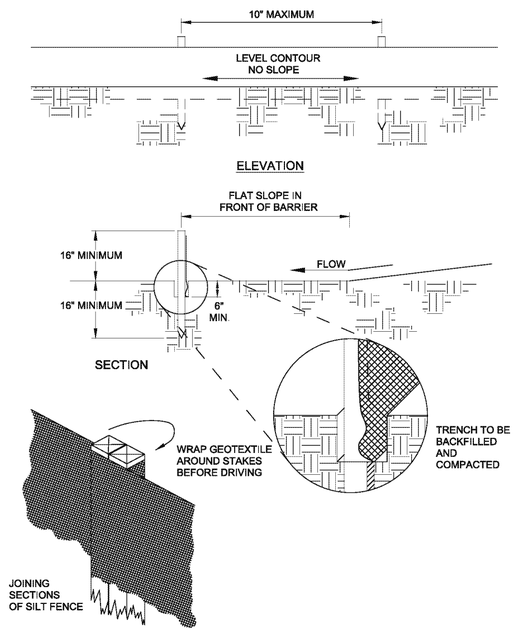

Specifications for Silt Fence

1. Silt fence shall be constructed before upslope land disturbance begins.
2. All silt fence shall be placed as close to the contour as possible so that water will not concentrate at low points in the fence and so that small swales or depressions which may carry small concentrated flows to the silt fence are dissipated along its length.
3. To prevent water ponded by the silt fence from flowing around the ends, each end shall be constructed upslope so that the ends are at a higher elevation.
4. Where possible, silt fence shall be placed on the flattest area available.
5. Where possible, vegetation shall be preserved for 5 feet (or as much as possible) upslope from the silt fence. If vegetation is removed, it shall be reestablished within 7 days from the installation of the silt fence.
6. The height of the silt fence shall be a minimum of 16 inches above the original ground surface.
7. The silt fence shall be placed in a trench cut a minimum of 6 inches deep. The trench shall be cut with a trencher, cable laying machine, or other suitable device which will ensure an adequately uniform trench depth.
8. The silt fence shall be placed with the stakes on the downslope side of the geotextile and so that 8 inches of cloth are below the ground surface. Excess material shall lay on the bottom of the 6 inch deep trench. The trench shall be backfilled and compacted.
9. Seams between section of silt fence shall be overlapped with the end stakes of each section wrapped together before driving into the ground.
10. Maintenance--Silt fence shall allow runoff to pass only as diffuse flow through the geotextile. If runoff overtops the silt fence, flows under or around the ends, or in any other way becomes a concentrated flow, one of the following shall be performed, as appropriate: 1) The layout of the silt fence shall be changed, 2) Accumulated sediment shall be removed, or 3) Other practices shall be installed.

Criteria for Silt Fence Materials:

1. Fence Posts--The length shall be a minimum of 32 inches long. Wood posts will be 2-by-2 inch hardwood of sound quality. The maximum spacing between posts shall be 10 feet.
2. Silt Fence Fabric (see chart below):

SILT FENCE

NOT TO SCALE

Fabric Properties	Values	Test Method
Grab Tensile Strength	90 lb. minimum	ASTM D 1682
Mullen Burst Strength	190 psi minimum	ASTM D 3786
Slurry Flow Rate	0.3 gal./min./f maximum	
Equivalent Opening Size	40-80	US Std. sieve CW-02215
Ultraviolet Radiation Stability	90% minimum	ASTM-G-26

Description

A construction entrance is a stabilized pad of aggregate over a geotextile base and is used to reduce the amount of mud tracked off-site with construction traffic.

Specifications for Construction Entrance

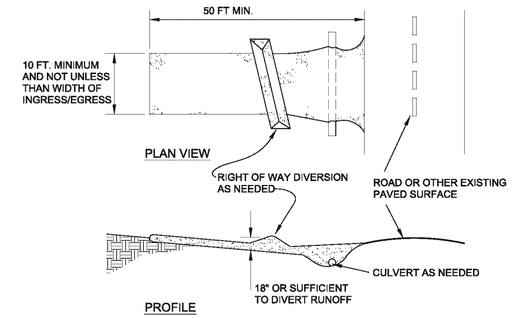

Specifications for Construction Entrance

1. Stone Size--Two-inch stone shall be used, or recycled concrete equivalent.
2. Length--The construction entrance shall be as long as required to stabilize high traffic areas but not less than 50 feet. (except on single residence lot where a 30-foot minimum length applies).
3. Thickness--The stone layer shall be at least 6 inches thick.
4. Width--The entrance shall be at least 10 feet wide, but not less than the full width at points where ingress or egress occurs.
5. Bedding--A geotextile shall be placed over the entire area prior to placing stone. It shall have a Grab Tensile Strength of at least 200 lb. and a Mullen Burst Strength of at least 190 lb.
6. Culvert--A pipe or culvert shall be constructed under the entrance if needed to prevent surface water flowing across the entrance from being directed out onto paved surfaces.
7. Water Bar--A water bar shall be constructed as part of the construction entrance if needed to prevent surface runoff from flowing the length of the construction entrance and out onto paved surfaces.
8. Maintenance--Top dressing of additional stone shall be applied as conditions demand. Mud spilled, dropped, washed or tracked onto public roads, or any surface where runoff is not checked by sediment controls, shall be removed immediately. Removal shall be accomplished by scraping or sweeping.
9. Construction entrances shall not be relied upon to remove mud from vehicles and prevent off-site tracking. Vehicles that enter and leave the construction site shall be restricted from muddy areas.

GENERAL NOTE:

1. TEMPORARY CONSTRUCTION ENTRANCES MUST BE INSTALLED AT EACH CONSTRUCTION TRAFFIC ENTRANCE / EXIT. THESE LOCATIONS WILL BE COORDINATED BY THE CONSTRUCTION MANAGER.

2. CONTRACTOR TO WASH OFF WHEELS IN GRAVEL CONSTRUCTION ENTRANCE PRIOR TO ENTERING CITY STREETS. IF MUD ACCUMULATES IN STREETS, THEN THE CONTRACTOR SHALL BE RESPONSIBLE TO CLEAN STREETS AS REQUESTED BY THE CITY OR CONSTRUCTION MANAGER.

CONSTRUCTION ENTRANCE

NOT TO SCALE

quasar energy group
7624 Riverview Road
PO Box 31023
Cleveland OH 44141
Phone: 216.986.9999

Scale: NONE

This drawing contains valuable confidential and proprietary information that belongs to quasar energy group, llc ("quasar"), and is subject to a separate Confidentiality and Nondisclosure Agreement. quasar is the author and owner of this drawing, and retains all common law, statutory and other rights and privileges with respect hereto, including copyrights. The information contained herein may not at any time be used for any unauthorized purpose, nor reproduced by or provided to any third party, without the prior written consent of quasar.

STATE OF OHIO
ALAN R. JOHNSON
46333
REGISTERED PROFESSIONAL ENGINEER

AS BUILT

Rev.	ECN Number	Date
2		
1		
0	AS BUILT	__/__/__

Drawing Name:
SWPPP DETAILS

Project Name and Address:
0058-CAR-OH-11

RINGLER FARMS
ADS Facility
ecoFarmsystem 980

2277 County Road 156
Cardington, OH 43315-9742

Area:

Author:
—

Calculated:

Checked:
RN

Sheet Number:
SD-7

© 2012, Quasar Energy Group, LLC. All rights reserved.

P:\SBE Projects\0058-CAR-OH-11 - Ringler Farms\BUILDING DRAWINGS\CURRENT DRAWINGS (AS BUILT)\RINGLER FARMS (SD-4,5,6,7) SITE DETAILS.dwg
11/15/2013 2:09 PM

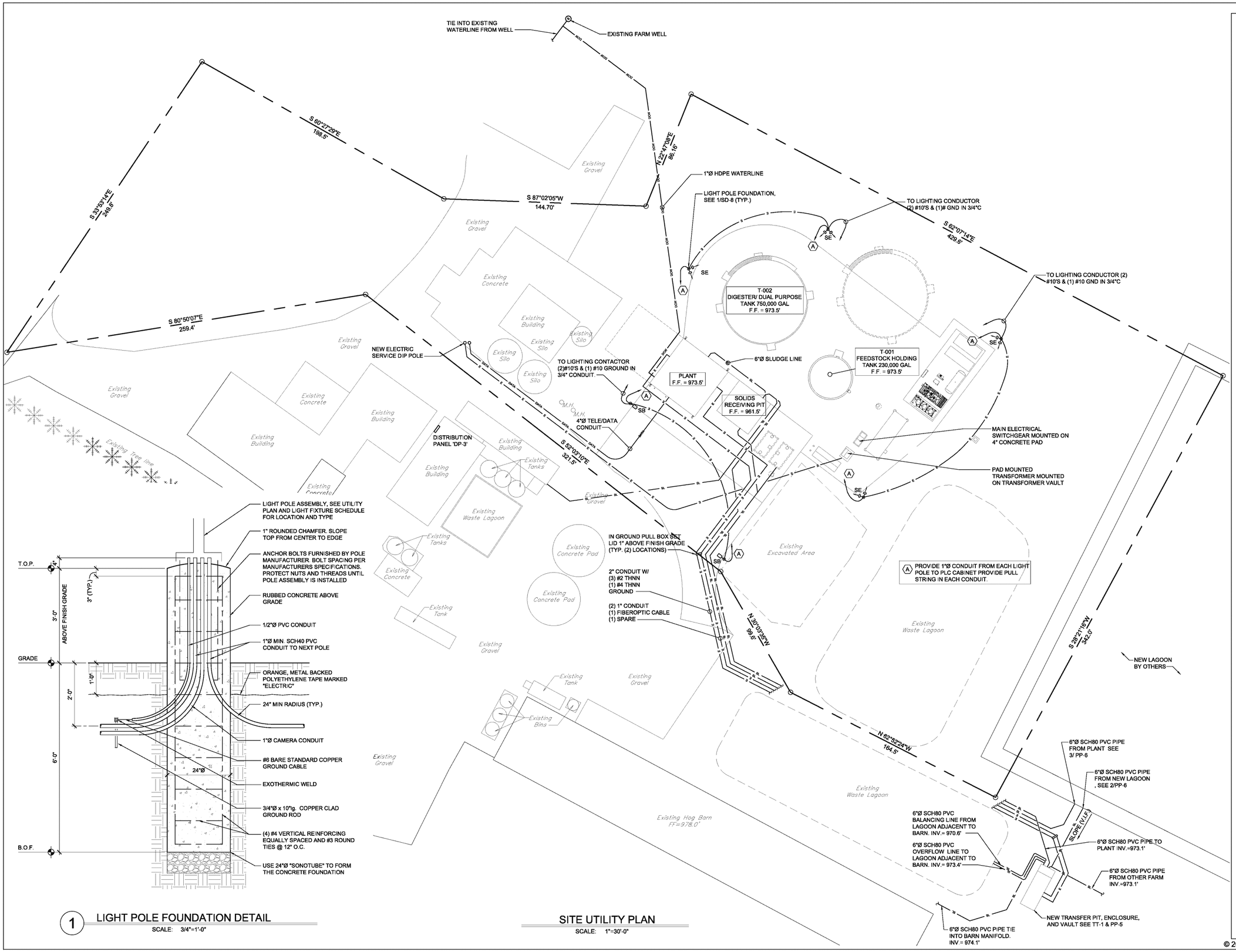

1 LIGHT POLE FOUNDATION DETAIL
SCALE: 3/4"=1'-0"

SITE UTILITY PLAN
SCALE: 1"=30'-0"

quasar energy group
7624 Riverview Road
PO Box 31023
Cleveland OH 44141
Phone: 216.986.9999

Scale: SEE DETAIL

This drawing contains valuable confidential and proprietary information that belongs to quasar energy group, llc ("quasar"), and is subject to a separate Confidentiality and Nondisclosure Agreement. quasar is the author and owner of this drawing, and retains all common law, statutory and other rights and privileges with respect hereto, including copyrights. The information contained herein may not at any time be used for any unauthorized purpose, nor reproduced by or provided to any third party, without the prior written consent of quasar.

STATE OF OHIO
ALAN R. JOHNSON
46333
REGISTERED PROFESSIONAL ENGINEER

AS BUILT

Rev.	ECN Number	Date
2		
1		
0	AS BUILT	__/__/__

Drawing Name:
SITE UTILITY PLAN

Project Name and Address:
0058-CAR-OH-11

RINGLER FARMS
ADS Facility
ecoFarmsystem 980

2277 County Road 156
Cardington, OH 43315-9742

Area:
Author: RAMII
Calculated:
Checked: RN
Sheet Number: SD-8

© 2012, Quasar Energy Group, LLC. All rights reserved.

P:\SBE Projects\0058-CAR-OH-11 - Ringler Farms\BUILDING DRAWINGS\CURRENT DRAWINGS (AS BUILT)\RINGLER FARMS (SD-8) SITE UTILITY .dwg
11/15/2013 2:08 PM

GENERAL CONDITIONS:

1. IT IS SOLELY THE CONTRACTOR'S RESPONSIBILITY TO DETERMINE ERECTION PROCEDURE AND SEQUENCE TO ENSURE THE SAFETY OF THE BUILDING AND TANKS AND THEIR COMPONENT PARTS DURING ERECTION. THIS INCLUDES, BUT IS NOT LIMITED TO, THE ADDITION OF WHATEVER TEMPORARY BRACING, GUYS OR TIE-DOWNS MAY BE NECESSARY. SUCH MATERIAL SHALL BE REMOVED AND SHALL REMAIN THE PROPERTY OF THE CONTRACTOR AFTER COMPLETION OF THE PROJECT. THE CONTRACTOR SHALL SUPPORT, BRACE AND SECURE EXISTING STRUCTURES AND UTILITIES AS REQUIRED. CONTRACTOR IS SOLELY RESPONSIBLE FOR THE SAFETY OF THE EXISTING STRUCTURES & UTILITIES DURING CONSTRUCTION. FIELD VERIFY ALL EXISTING DIMENSIONS, ELEVATIONS AND CONDITIONS WHICH AFFECT THE NEW CONSTRUCTION.

2. IF MATERIALS, QUANTITIES, STRENGTHS OR SIZES INDICATED BY THE DRAWINGS OR SPECIFICATIONS ARE NOT IN AGREEMENT WITH THESE NOTES, THE BETTER QUALITY AND/OR GREATER QUANTITY, STRENGTH OR SIZE INDICATED, SPECIFIED OR NOTED SHALL BE PROVIDED.

3. ALL DIMENSIONS AND ELEVATIONS SHOWN ON THE STRUCTURAL DRAWINGS SHALL BE VERIFIED BY THE CONTRACTOR AND SHALL CONFORM TO THOSE SHOWN ON THE ARCHITECTURAL, METAL BUILDING MFG., & TANK AND EQUIPMENT VENDOR DRAWINGS. THE CONTRACTORS ARE SOLELY RESPONSIBLE FOR FIELD VERIFYING ALL EXISTING CONDITIONS AND DIMENSIONS. CONTRACTORS SHALL REPORT ANY DISCREPANCIES TO THE A/E PRIOR TO PROCEEDING.

4. GOVERNING CODE: OHIO BUILDING CODE, (CURRENT EDITION)

5. FLOOR DESIGN LIVE LOADS:

   PLANT AREA FLOOR SLABS 125 PSF

6. ROOF LOADS (PER SECTION 1608 OHIO BUILDING CODE)

   GROUND SNOW LOAD PG = 20 PSF
   FLAT ROOF SNOW LOAD PF = 20 PSF
   SNOW EXPOSURE FACTOR CE = 1.0
   THERMAL FACTOR CT = 1.0
   SNOW LOAD IMPORTANCE FACTOR I = 1.0
   MINIMUM EXTERNAL ROOF LIVE LOAD 20 PSF (UNREDUCIBLE)
   MINIMUM UNDERHUNG ROOF LIVE LOAD 10 PSF (UNREDUCIBLE)
   DRIFT LOAD TO BE CALCULATED BY BUILDING SUPPLIER/DESIGNER.
   SEE DRAWINGS FOR ADDITIONAL CONCENTRATED LOAD REQUIREMENTS

7. WIND LOAD (PER SECTION 1609 OHIO BUILDING CODE)

   BASIC WIND SPEED (3 SEC GUST) = 90 MPH
   WIND IMPORTANCE FACTOR I = 1.0
   OCCUPANCY CATEGORY = II
   WIND EXPOSURE CATEGORY = C
   COMPONENTS AND CLADDING PRESSURE :
   (MIN. FOR VARIOUS TRIB. AREAS UNLESS MORE DETAILED CALCS ARE PERFORMED PER CODE):
   WALLS: +/- 25 PSF (FIELD AREAS < 50 SF)
   +/- 20 PSF (FIELD AREAS > 50 SF)
   +/- 30 PSF (CORNER AREAS < 50 SF)
   +/- 25 PSF (CORNER AREAS > 50 SF)

   ROOF: +/- 20 PSF FIELD
   +/- 35PSF (EDGE ZONES < 50 SF)
   +/- 25 PSF (EDGE ZONES > 50 SF)
   +/- 50 PSF (CORNER ZONES < 50 SF)
   +/- 30 PSF (CORNER ZONES < 100 SF)
   +/- 25 PSF (CORNER ZONES > 100 PSF)

8. EARTHQUAKE DESIGN DATA (PER SECTION 1613 - 1620 OHIO BUILDING CODE)

   SEISMIC IMPORTANCE FACTOR = 1.0
   OCCUPANCY CATEGORY = II
   MAPPED SPECTRAL RESPONSE COEFFICIENTS SDS = 16 SDI = 9 6
   SEISMIC DESIGN CATEGORY = B
   BASIC SEISMIC FORCE RESISTING SYSTEM = *
   DESIGN BASE SHEAR = *
   SEISMIC RESPONSE COEFFICIENT, Cs = *
   RESPONSE MODIFICATION FACTOR, R = *
   SITE CLASS = D
   ANALYSIS PROCEDURE: *

   * = SEE PRE-ENGINEERED METAL BUILDING VENDOR AND TANK VENDOR DRAWINGS FOR THIS INFORMATION

9. FLOOD DESIGN CRITERIA: SITE IS NOT IN A MAPPED FLOOD ZONE.

10. ANY CHANGES TO THE STRUCTURAL SYSTEMS SHALL BE REDESIGNED BY A PROFESSIONAL ENGINEER AT NO COST TO THE OWNER OR THE A/E AND SUBMITTED TO THE A/E FOR REVIEW. SUBMITTAL SHALL BE ACKNOWLEDGED IN WRITING BEFORE BEGINNING CONSTRUCTION. IF CHANGES ARE MADE WITHOUT WRITTEN APPROVAL SUCH CHANGES SHALL BE THE LEGAL AND FINANCIAL RESPONSIBILITY OF THE PARTY MAKING THE CHANGE TO REPLACE OR REPAIR THE CONDITION AS DIRECTED BY THE A/E.

11. CONSTRUCTION LOADS SHALL NOT EXCEED DESIGN LIVE LOADS. SHORING AND RE-SHORING IS THE RESPONSIBILITY OF THE CONTRACTOR.

12. COORDINATE WITH ALL DRAWINGS FOR PERTINENT INFORMATION RELATED TO STRUCTURAL WORK. EQUIPMENT FRAMING LOADS, OPENINGS AND STRUCTURE IN ANY WAY RELATED TO HVAC, PLUMBING, OR ELECTRICAL REQUIREMENTS ARE SHOWN FOR BIDDING PURPOSES ONLY. CONTRACTOR SHALL OBTAIN APPROVAL OF THE INVOLVED TRADES BEFORE PROCEEDING WITH SUCH PORTION OF THE WORK. EXCESS COST RELATED TO VARIATION IN THESE REQUIREMENTS TO BE BORNE BY THE APPROPRIATE CONTRACTOR.

13. BUILDING FOUNDATION DESIGN DATA: FOUNDATION DESIGN FOR THE BUILDING IS BASED ON THE FOLLOWING PRELIMINARY FOUNDATION REACTIONS PROVIDED BY THE OWNER'S PRELIMINARY BUILDING MANUFACTURER:

   BUILDING DESIGN LOADS:
   OHIO BUILDING CODE CRITERIA AS OUTLINED IN THESE NOTES
   BRACING LOADS INCLUDED IN LOADS LISTED BELOW

   SIDEWALL COLUMNS:
   VERTICAL: 41 KIPS DOWN/10 KIPS UPLIFT
   HORIZONTAL: 19 KIPS OUTWARD/7 KIPS INWARD/5KIPS IN WALL PLANE

   ENDWALL COLUMNS:
   VERTICAL: 16 KIPS DOWN/5 KIPS UPLIFT
   HORIZONTAL: 3 KIPS INWARD & OUTWARD

   CORNER COLUMNS:
   VERTICAL: 8 KIPS DOWN/5 KIPS UPLIFT
   HORIZONTAL: 3 KIPS INWARD & OUTWARD LINES 1 & 5;
   5 KIPS INWARD (BRACING) &3 KIPS OUTWARD LINES A & D

14. CONFIRMATION OF DESIGN LOADS REQUIRED: CONSTRUCTION OF THE BUILDING FOUNDATIONS SHALL NOT BEGIN UNTIL THE BUILDING MANUFACTURERS HAVE PROVIDED WRITTEN CONFIRMATION THAT FINAL DESIGN REACTIONS AND DESIGN DATA ARE AS GIVEN ABOVE.

15. IF CHANGES TO THE DESIGN LOADS AND/OR TANK OR BUILDING CONFIGURATIONS OR CRITERIA ARE MADE OR ANTICIPATED, THE DRAWINGS MAY REQUIRE MODIFICATIONS, NOTIFY ENGINEER.

16. CONNECTION OF TANKS AND BUILDING TO FOUNDATIONS: CONNECTION OF THE TANKS AND THE BUILDINGS TO THE FOUNDATIONS IS THE RESPONSIBILITY OF THE TANK AND BUILDING VENDORS. IF MODIFICATIONS TO TANK MAT FOUNDATIONS OR BUILDING FOUNDATIONS OR PIERS ARE REQUIRED FOR CONNECTION, ENGINEER SHALL BE NOTIFIED AND SHALL REVIEW MODIFICATIONS PRIOR TO BEGINNING CONSTRUCTION.

FOUNDATIONS:

1. THE CONTRACTOR SHALL BECOME FAMILIAR WITH THE SURVEY AND GEOTECHNICAL REPORTS BEFORE BEGINNING CONSTRUCTION. WHERE RECOMMENDATIONS GIVEN IN THE REPORTS AND ON THE DRAWINGS DIFFER, THE MORE STRINGENT REQUIREMENTS SHALL GOVERN. REFERENCE GEOTECHNICAL REPORT BY "PSI" DATED 3/30/2015

   DESIGN SOIL BEARING PRESSURE BENEATH BUILDING AND WALL FOUNDATIONS SHALL BE 2500 PSF, BENEATH DUAL PURPOSE & EQ TANKS 3000 PSF, BENEATH LIQUID RECEIVING TANK 5000 PSF & BENEATH SOLIDS RECEIVING PIT 5000 PSF.

2. NOTIFY THE OWNER'S REPRESENTATIVE AS SOON AS POSSIBLE OF ANY UNUSUAL SOIL CONDITIONS OR SOIL CONDITIONS IN VARIANCE WITH TEST BORINGS.

3. SET FOUNDATIONS AT ELEVATIONS SHOWN, OR ON FIRM UNDISTURBED MATERIAL OF DESIGN BEARING CAPACITY, WHICHEVER IS LOWER. THE GEOTECHNICAL ENGINEER SHALL VERIFY THAT EACH MAT FOUNDATION OR FOOTING PLACED IS BEARING ON ADEQUATE MATERIAL. BEARING MATERIALS SHALL BE FREE OF SOFT, COMPRESSIBLE MATERIALS AND SHALL HAVE AN ALLOWABLE BEARING CAPACITY AS DETERMINED BY THE GEOTECHNICAL ENGINEER. SOILS NOT MEETING THESE REQUIREMENTS OR SUBGRADE SOILS THAT DETERIORATE PRIOR TO CONCRETE PLACEMENT SHALL BE OVEREXCAVATED AND REMOVED AND REPLACED.

4. THE CONTRACTOR SHALL PROTECT EXISTING STRUCTURES, ROADWAYS, SLABS, AND BURIED UTILITIES FROM UNDERMINING DURING EXCAVATION. THE CONTRACTOR SHALL BE RESPONSIBLE FOR THE DESIGN, INSTALLATION, AND FINAL CLEARANCE OF ANY REQUIRED NEEDLING, UNDERPINNING, SHORING, OR BRACING OF EXISTING STRUCTURES OR UTILITIES.

5. WHERE REQUIRED, STEP FOOTINGS AT A RATIO OF ONE VERTICAL TO TWO HORIZONTAL, WITH A MAXIMUM VERTICAL STEP OF 2'-0", UNLESS NOTED OTHERWISE. FOOTINGS SHALL BE STEPPED UP OR DOWN AS NOTED ON DRAWINGS, OR AS REQUIRED BY ADJACENT UTILITIES, MANHOLES, OR VAULTS. FOOTINGS SHALL BE STEPPED DOWN ADJACENT TO THE AFOREMENTIONED ITEMS IF ANY PART OF THE ITEM FALLS BENEATH OR INTERSECTS A LINE PROJECTED DOWNWARD AT 2 HORIZONTAL:1 VERTICAL OUTWARD FROM THE EDGE OF THE FOUNDATION'S BEARING SURFACE.

6. WHEN FOUNDATION WALLS RELY ON BUILDING FLOORS TO BRACE THEM AGAINST LATERAL EARTH PRESSURE, BACKFILLING AGAINST THE WALLS SHALL NOT BE PERMITTED UNTIL THE SUPPORTING FLOOR(S) ARE IN PLACE AND ARE ABLE TO RESIST THE IMPOSED LATERAL FORCES. PROPER TEMPORARY BRACING MAY BE USED IN LIEU THEREOF IF DESIGNED BY A PROFESSIONAL ENGINEER. THE DESIGN OF TEMPORARY BRACING IS ENTIRELY THE RESPONSIBILITY OF THE CONTRACTOR.

7. BACKFILL AND FILL MATERIALS SHALL CONSIST OF SOIL MATERIALS APPROVED BY THE GEOTECHNICAL ENGINEER, AND BE FREE OF DEBRIS, WATER, FROZEN MATERIALS, ORGANIC AND OTHER DELETERIOUS MATTER. SPECIAL-PURPOSE FILL MATERIALS ARE DESCRIBED BELOW:

   A. POROUS FILL SHALL BE NATURALLY OR ARTIFICIALLY GRADED MIXTURE OF CRUSHED LIMESTONE OR GRAVEL, (4" THICK, COMPACTED, UNLESS NOTED OTHERWISE ON DRAWINGS) AND THE GRADATION SHALL CONFORM WITH ASTM C33, SIZE #57.

   B. DRAINAGE FILL SHALL BE A WASHED, UNIFORMLY GRADED MIXTURE OF CRUSHED STONE, OR GRAVEL OR UNCRUSHED GRAVEL, AT EXTERIOR WALLS AND RETAINING WALLS, HAVING THE FOLLOWING GRADATION:

SIEVE SIZE	TOTAL % PASSING
1"	100
3/4"	90-100
3/8"	20-55
NO. 4	0-10
NO. 8	0-5

   C. WELL GRADED GRANULAR MATERIAL (#8) SHALL CONFORM TO ASTM C33.

8. EXCAVATION AND COMPACTION:

   A. CARE SHALL BE TAKEN TO NOT DISTURB THE BOTTOM OF EXCAVATIONS. EXCAVATION TO FINAL GRADE SHALL NOT BE MADE UNTIL JUST PRIOR TO PLACING CONCRETE. CONTRACTOR SHALL APPROPRIATELY BRACE OR SUPPORT THE SIDES OF FOUNDATION EXCAVATIONS TO MAINTAIN STABILITY THROUGHOUT CONSTRUCTION.

   B. SURFACE WATER SHALL BE DIVERTED AROUND THE FOUNDATION EXCAVATIONS, AND EXCAVATIONS SHALL BE KEPT FREE OF STANDING WATER. A QUALIFIED GEOTECHNICAL ENGINEER SHALL INSPECT AND APPROVE THE BEARING SURFACES JUST PRIOR TO PLACEMENT OF CONCRETE.

   C. SHOULD VERTICAL OVEREXCAVATION BEYOND PLANNED SUBGRADE DEPTHS BE REQUIRED FOR BUILDING OR TANK FOUNDATIONS, BACKFILL OF OVEREXCAVATION SHALL BE WITH LEAN CONCRETE HAVING MINIMUM COMPRESSIVE STRENGTH OF 1,500 PSI AT 28 DAYS, OR WITH LOW STRENGTH MATERIAL (LSM) HAVING A MINIMUM COMPRESSIVE STRENGTH OF 500 PSI.

   D. BACKFILL OF EXCAVATIONS OTHER THAN OVEREXCAVATIONS BELOW FOUNDATION SUBGRADES SHALL BE WITH ENGINEERED FILL. BACKFILL AND FILL SHALL BE PLACED IN LIFTS OF 8" MAXIMUM LOOSE DEPTH. EACH LIFT SHALL BE COMPACTED WITH A POWER VIBRATING COMPACTOR OR SIMILAR EQUIPMENT TO ASSURE MAXIMUM COMPACTION OF THE MATERIAL.

   E. COMPACTION SHALL BE NOT LESS THAN 98% OF MAXIMUM DENSITY ACCORDING TO ASTM D698 FOR COHESIVE MATERIAL. COHESIONLESS FILL FOR DRAINAGE SHALL BE COMPACTED TO 96% OF MAX DENSITY ACCORDING TO ASTM D-4253 AND D-4254.

   F. SETTLEMENT OR WASHING OUT THAT OCCURS IN GRADED OR BACKFILLED AREAS PRIOR TO ACCEPTANCE OF THE WORK SHALL BE REPAIRED AND GRADES RE-ESTABLISHED TO THE REQUIRED ELEVATIONS AND SLOPES.

   G. ALL EXCESS MATERIAL SHALL BE REMOVED FROM THE SITE.

9. EARTHWORK FIELD QUALITY CONTROL:

   A. THE OWNER SHALL EMPLOY AN INDEPENDENT GEOTECHNICAL TESTING LABORATORY TO TEST SUBGRADE SOILS.

   B. AT FOOTING SUBGRADES, AT LEAST ONE TEST OF EACH SOIL STRATUM WILL BE PERFORMED TO VERIFY DESIGN BEARING CAPACITIES.

   C. TESTING AGENCY WILL TEST COMPACTION OF SOILS IN PLACE ACCORDING TO ASTM D 1556, D2167, D2922, AND ASTM D2937, AS APPLICABLE. TEST PER FOLLOWING:

      1) PAVED AND BUILDING SLAB AREAS: AT SUBGRADE AND AT EACH COMPACTED FILL LAYER, AT LEAST 1 TEST FOR EVERY 2000 SQ. FT., BUT IN NO CASE LESS THAN 3 TESTS.

      2) FOOTINGS: AT EACH COMPACTED BACKFILL LAYER AT EACH FOOTING OR 1 TEST FOR EACH 100 FT. OF WALL FOOTING.

   D. CONTRACTOR SHALL RECOMPACT AND RETEST UNTIL SPECIFIED COMPACTION IS OBTAINED.

STRUCTURAL ABBREVIATIONS:

AB	ANCHOR BOLT
ACI	AMERICAN CONCRETE INSTITUTE
ADJ	ADJACENT
A/E	ARCHITECT/ENGINEER
AISC	AMERICAN INSTITUTE OF STEEL CONSTRUCTION
ALT	ALTERNATE
ANC	ANCHOR
ASD	ALLOWABLE STRESS DESIGN
APPROX	APPROXIMATE(LY)
ARCH	ARCHITECTURAL
ASPH	ASPHALT
ASTM	AMERICAN SOCIETY FOR TESTING AND MATERIALS
AWS	AMERICAN WELDING SOCIETY
B/	BOTTOM OF
BL	BUILDING LINE
BLDG	BUILDING
BM	BEAM
BOT	BOTTOM
BP	BASE PLATE
BRG	BEARING
BRG P	BEARING PLATE
BT	BENT
BTWN	BETWEEN
C/C	CENTER TO CENTER
CANT	CANTILEVER
CAP	CAPACITY
CERT	CERTIFIED
CG	CENTER OF GRAVITY
CHKD	CHECKERED
CIP	CAST IN PLACE
CJ	CONTROL JOINT
C	CENTER LINE
CLG	CEILING
CLR	CLEAR(ANCE)
CMU	CONCRETE MASONRY UNIT
CO	CLEAN OUT
COL	COLUMN
COMP	COMPRESSION
COMPR	COMPRESSIBLE
CONC	CONCRETE
CONN	CONNECTION
CONST	CONSTRUCTION
CONST JT	CONSTRUCTION JOINT
CONT	CONTINUOUS
CONTR	CONTRACTOR
COOR	COORDINATE
CTR	CENTER
CU YD	CUBIC YARD
DBL	DOUBLE
DEG	DEGREE
DEPR	DEPRESSION
DET	DETAIL
DIA (Ø)	DIAMETER
DIAG	DIAGONAL
DIAPH	DIAPHRAGM
DIM	DIMENSION
DIST	DISTRIBUTION
DK	DECK
DL	DEAD LOAD
DN	DOWN
DO	DITTO
DP	DAMPPROOFING
DWG	DRAWING
DWL	DOWEL
EA	EACH
EF	EACH FACE
EJ	EXPANSION JOINT
EL	ELEVATION
ELECT	ELECTRICAL
ELEV	ELEVATION
ENCL	ENCLOSE
EQ	EQUAL
EQ SPA	EQUALLY SPACED
EQUIP	EQUIPMENT
ES	EACH SIDE
EW	EACH WAY
EXCAV	EXCAVATION
EXIST	EXISTING
EXP	EXPOSED
EXPAN	EXPANSION
EXT	EXTERIOR
EXTEN	EXTENSION
F/F	FACE TO FACE
FD	FLOOR DRAIN
FDN	FOUNDATION
FIN	FINISH
FLR	FLOOR
FS	FAR SIDE
FT	FOOT(FEET)
FTG	FOOTING
GA	GAGE
GALV	GALVANIZE
GEN	GENERAL
GR	GRADE
GRTG	GRATING
H	HORIZONTAL
HDR	HEADER
HORIZ	HORIZONTAL
HP	HIGH POINT
HT	HEIGHT
ID	INSIDE DIAMETER
IF	INSIDE FACE
IN	INCH(ES)
INCL	INCLUDE(ED)(ING)
INSUL	INSULATION
INT	INTERIOR
INV	INVERT
JST	JOIST
JT	JOINT
K	
KF	
KLF	
KSF	
KSI	
L	LENGTH
LB	POUND
LEV	LEVEL
LEV P_	LEVELING PLATE
LG	LONG
LIN	LINEAL
LL	LIVE LOAD
LLH	LONG LEG HORIZONTAL
LLV	LONG LEG VERTICAL
LOC	LOCATION
LONG	LONGITUDINAL
LP	LOW POINT
MAS	MASONRY
MATL	MATERIAL
MAX	MAXIMUM
MECH	MECHANICAL
MEZZ	MEZZANINE
MFR	MANUFACTURER
MIN	MINIMUM
MISC	MISCELLANEOUS
NCMA	
NOM	
NS	
NTS	
O/O	OUT TO OUT
OBC	OHIO BUILDING CODE
OC	ON CENTER
OD	OUTSIDE DIAMETER
OF	OUTSIDE FACE
OPNG	OPENING
OPP	OPPOSITE
OPP HD	OPPOSITE HAND
OSL	OUTSTANDING LEG
P/L	
PCF	
PERIM	
P	
PSF	
PSI	
PVC	
QTY	QUANTITY
R	
RAD	
REBAR	
REF	
REINF	
REQD	
REV	
SCHED	SCHEDULE
SDI	STEEL DECK INSTITUTE
SECT	SECTION
SHT	SHEET
SIM	SIMILAR
SJI	STEEL JOIST INSTITUTE SLAB
SOG	ON GRADE
SPA	SPACE(S)(ING) SPECIFICATION
SPEC	SQUARE
SQ	SQUARE FOOT
SQ FT	SQUARE INCH
SQ IN	STANDARD
STD	STIFFEN(ER)
STIFF	STIRRUP
STIR	STEEL
STL	STRUCTURE(AL)
STR	SUPPORT
SUPT	SYMMETRICAL
SYM	
T	TREAD
T & B	TOP AND BOTTOM
T/	TOP OF
T/B	TOP OF BEAM
T/C	TOP OF CONCRETE
T/FTG	TOP OF FOOTING
T/PIER	TOP OF PIER
T/STL	TOP OF STEEL
T/W	TOP OF WALL
TEMP	TEMPERATURE
THK	THICK(NESS)
THKD	THICKENED
TOT	TOTAL
TYP	TYPICAL
UNO	
V	VERTICAL
VB	VAPOR BARRIER
W/	WITH
W/O	WITHOUT
WL	WIND LOAD
WPT	WORK POINT
WS	WATERSTOP
WT	WEIGHT
WWF	WELDED WIRE FABRIC
YD	YARD

quasar energy group
7624 Riverview Road
PO Box 31023
Cleveland OH 44141
Phone: 216.986.9999

Scale: SEE DETAIL

This drawing contains valuable confidential and proprietary information that belongs to quasar energy group, llc ("quasar"), and is subject to a separate Confidentiality and Nondisclosure Agreement. quasar is the author and owner of this drawing, and retains all common law, statutory and other rights and privileges with respect hereto, including copyrights. The information contained herein may not at any time be used for any unauthorized purpose, nor reproduced by or provided to any third party, without the prior written consent of quasar.

STATE OF OHIO
ALAN B. JOHNSON
46333
REGISTERED
PROFESSIONAL ENGINEER

AS BUILT

Rev.	ECN Number	Date
2		
1		
0	AS BUILT	__/__/__

Drawing Name
STRUCTURAL NOTES & ABBREVIATIONS

Project Name and Address:
0058-CAR-OH-11

RINGLER FARMS
ADS Facility
ecoFarmsystem 980

2277 County Road 156
Cardington, OH 43315-9742

Area: _
Author: RAMII
Calculated: _
Checked: RN
Sheet Number: S-1

© 2012, Quasar Energy Group, LLC. All rights reserved.

P:\SSE Projects\0058-CAR-OH-11 - Ringler Farms\BUILDING DRAWINGS\CURRENT DRAWINGS (AS BUILT)\RINGLER FARMS STRUCTURAL.dwg
11/19/2013 3:59 PM

CAST-IN-PLACE CONCRETE:

1. CAST-IN-PLACE CONCRETE WORK SHALL CONFORM TO THE AMERICAN CONCRETE INSTITUTE CODES AND STANDARDS. ACI 301-05 "STANDARD SPECIFICATIONS FOR STRUCTURAL CONCRETE" IS HEREBY MADE A PART OF THESE DRAWINGS. ALL CONCRETE CONSTRUCTION SHALL CONFORM TO ACI 301-05, EXCEPT AS EXPLICITLY MODIFIED HEREIN. MATS AND FOUNDATIONS FOR TANKS AND EQUIPMENT SHALL ALSO CONFORM TO TANK VENDOR AND EQUIPMENT MANUFACTURER REQUIREMENTS WHERE MORE STRINGENT.

2. ALL CONCRETE WORK SHALL BE IN ACCORDANCE WITH ACI 318-05, "THE BUILDING CODE REQUIREMENTS FOR REINFORCED CONCRETE". ALL REINFORCING DETAILS SHALL CONFORM TO "DETAILS AND DETAILING OF REINFORCEMENT" ACI 315, UNLESS DETAILED OTHERWISE ON THE DRAWINGS.

3. CONCRETE SHALL HAVE THE FOLLOWING MINIMUM COMPRESSIVE STRENGTHS AT 28 DAYS:

   A. 4000 PSI WITHOUT ENTRAINED AIR FOR ALL INTERIOR CONCRETE WITH A MAXIMUM WATER/CEMENT RATIO = 0.45 UNLESS SPECIFICALLY NOTED OTHERWISE.

   B. 4000 PSI WITH A MAXIMUM WATER/CEMENT RATIO = 0.45 AND WITH AN ENTRAINED AIR ADMIXTURE CONFORMING WITH ASTM C260 FOR ALL CONCRETE PERMANENTLY EXPOSED TO THE WEATHER AND ALL CONCRETE FOR THE MAT FOUNDATIONS FOR TANKS T-001, T-002, & T-003. THE AMOUNT OF ENTRAINED AIR SHALL BE 6% ± 1%.

   C. 3000 PSI WITH A MAXIMUM WATER/CEMENT RATIO = 0.50 FOR BUILDING FOOTINGS THAT ARE BELOW GRADE AND NOT EXPOSED.

4. REINFORCING BARS TO BE ASTM A615, GRADE 60. DO NOT TACK WELD REINFORCING.

5. WELDED WIRE FABRIC SHALL BE ASTM A185, DELIVERED IN FLAT SHEETS.

6. CALCIUM CHLORIDE AND ADMIXTURES CONTAINING CALCIUM CHLORIDE ARE NOT PERMITTED.

7. ALL CONCRETE SHALL CONTAIN A WATER REDUCING ADMIXTURE CONFORMING TO ASTM C494, TYPE A, F OR G.

8. CONCRETE SHALL BE DISCHARGED AT THE SITE WITHIN 1-1/2 HOURS AFTER WATER HAS BEEN ADDED TO THE CEMENT AND AGGREGATES. ADDITION OF WATER TO THE MIX AT THE PROJECT SITE IS NOT ALLOWED. ADD ALL WATER AT THE BATCH PLANT.

9. DO NOT PLACE CONCRETE IN EXCAVATIONS CONTAINING WATER OR FROZEN SOIL.

10. REINFORCING BARS REQUIRED FOR PROPER SUPPORT OF PRINCIPAL REINFORCING SHALL BE DETAILED AND SUPPLIED BY THE CONTRACTOR WHETHER OR NOT THEY ARE INDICATED ON THE DRAWINGS. THE MINIMUM BAR SIZE SHALL BE #4 AND MAXIMUM SPACING SHALL BE 36" ON CENTER. WELDED WIRE FABRIC SHALL NOT BE USED FOR THE SUPPORT OF PRINCIPAL REINFORCING. CONCRETE CUBES OR SAND PLATED CHAIRS SHALL BE USED FOR THE SUPPORT OF REINFORCING ON GRADE. SPACERS, CHAIRS, BOLSTERS, ETC., WHICH BEAR ON EXPOSED CONCRETE SURFACES SHALL HAVE ENDS WHICH ARE PLASTIC TIPPED OR STAINLESS STEEL.

11. WHERE CONSTRUCTION JOINTS ARE REQUIRED BUT ARE NOT INDICATED ON THE DRAWINGS, THEY SHALL BE LOCATED AT MIDSPAN OF BEAMS, SLABS, AND WALLS, AND SHALL BE SUBJECT TO REVIEW BY THE A/E OR OWNER. UNLESS OTHERWISE NOTED OR SHOWN ON THE DRAWINGS, PROVIDE A CONTINUOUS SHEAR KEY IN SLABS AND WALLS. THE MINIMUM KEY SIZE SHALL BE 1_1/2" DEEP BY 1/3 THE DEPTH OR WIDTH OF THE MEMBER. AT CONCRETE SLABS ON STEEL DECK, SUPPORTED BY STEEL BEAMS, CONSTRUCTION JOINTS SHALL BE PLACED AT MIDSPAN OF DECK MID_WAY BETWEEN BEAMS.

12. ALL CONSTRUCTION JOINTS IN CONCRETE ENCLOSING OPEN AREAS BELOW GRADE SHALL HAVE WATERSTOPS, UNLESS NOTED OTHERWISE.

13. WHERE REINFORCING IS SHOWN CONTINUOUS THROUGH CONSTRUCTION JOINTS, MECHANICAL BAR SPLICE DEVICES MAY BE USED.

14. FORM CONTRACTION JOINTS WITH POWER SAWS EQUIPPED WITH SHATTERPROOF ABRASIVE OR DIAMOND-RIMMED BLADES. CUT 1/8-INCH- (3-MM-) WIDE JOINTS INTO CONCRETE WHEN CUTTING ACTION WILL NOT TEAR, ABRADE, OR OTHERWISE DAMAGE SURFACE AND BEFORE CONCRETE DEVELOPS RANDOM CONTRACTION CRACKS.

15. A LIQUID MEMBRANE CURING COMPOUND MEETING THE REQUIREMENTS OF ASTM C-309 SHALL BE USED ON ALL FORMED SURFACES DESIGNATED TO RECEIVE A "SMOOTH RUBBED FINISH" OR "GROUT CLEANED FINISH".

16. FOR CONCRETE WHICH WILL BE COVERED WITH A CONCRETE TOPPING OR A MATERIAL SET IN A MORTAR BED, BOTH OF WHICH REQUIRE A BOND TO THE FIRST CAST CONCRETE, THE LIQUID MEMBRANE CURING COMPOUND SHALL NOT BE USED, BUT A WATERPROOF SHEET MEMBRANE SHALL BE USED INSTEAD, CONFORMING TO ASTM C171 WITH ALL JOINTS AND EDGES SEALED WITH TAPE TO PREVENT MOISTURE LOSS.

17. COMPLY WITH ARCHITECTURAL DRAWINGS FOR LOCATION AND EXTENT OF SPECIAL FINISHES OR TREATMENTS TO EXPOSED CONCRETE. PROVIDE FLOOR SEALER TO EXPOSED INTERIOR FLOOR SLABS. PROVIDE A FLOOR HARDENER TO THE SLAB IN THE SOLIDS LOADING BAY.

18. PROVIDE WELDED WIRE FABRIC OR REINFORCING IN SLABS ON GRADE AS NOTED ON DRAWINGS. WHERE REINFORCING IS NOT NOTED, PROVIDE WWF 6 X 6 - W2.9 X W2.9 MINIMUM.

19. PLACE WELDED WIRE FABRIC IN SLABS ON GRADE AT 1/3 THE SLAB THICKNESS DOWN FROM TOP OF SLAB, UNLESS NOTED OTHERWISE.

20. ALL WELDED WIRE FABRIC SHALL BE CHAIRED TO ITS PROPER HEIGHT AND MAINTAINED AT THE PROPER LEVEL THROUGHOUT THE CONCRETE PLACING OPERATION. LIFTING OF WELDED WIRE FABRIC WITH A HOOK DURING CONCRETE PLACEMENT SHALL NOT BE PERMITTED.

21. OPENINGS:

   A. OPENINGS SHOWN ARE FOR BIDDING PURPOSES ONLY. RECONCILE THEIR EXACT SIZES AND LOCATIONS WITH HVAC, PLUMBING, AND OTHER REQUIREMENTS BEFORE PROCEEDING WITH WORK.

   B. AT ALL SLAB OPENINGS, THE EQUIVALENT OF REINFORCEMENT INTERRUPTED SHALL BE ADDED ON ALL SIDES OF THE OPENING. ALL OPENINGS SHALL BE LOCATED WITHIN THE MIDDLE HALF OF THE SPAN IN EACH DIRECTION UNLESS SPECIFICALLY APPROVED BY THE STRUCTURAL ENGINEER.

   C. OPENINGS SHALL NOT BE PROVIDED IN FRAMED SLABS, BEAMS, JOISTS, COLUMNS, AND WALLS UNLESS SHOWN ON STRUCTURAL DRAWINGS. IF ANY OPENING NOT SHOWN ON THE PLANS IS REQUIRED, SECURE APPROVAL OF THE A/E BEFORE PROCEEDING.

   D. PROVIDE ½ NUMBER OF BARS INTERUPTED PLUS ONE TYPICAL EACH FACE OF OPENING. PROVIDE TWO #5 BARS AROUND ALL SLAB AND WALL OPENINGS, EXTENDING 2' BEYOND OPENING IN EVERY DIRECTION UNLESS NOTED. OPENINGS NOT EXCEEDING 16" X 16" MAY BE SLEEVED AS REQUIRED BY WORKING THE REINFORCING STEEL AROUND THEM.22. CHAMFER EXPOSED EDGES OF CONCRETE 3/4", UNLESS NOTED OTHERWISE.

23. REINFORCING BAR LAP SPLICES AND ANCHORAGE LENGTHS SHALL CONFORM WITH ACI REQUIREMENTS AND BE DETAILED ON REINFORING PLACEMENT DRAWINGS. REINFORCING CLEAR COVER SHALL CONFORM WITH ACI REQUIREMENTS AND SHALL ALSO BE DETAILED ON REINFORCING PLACEMENT DRAWINGS.

24. FOOTINGS, COLUMNS, WALLS:

   A. DOWELS IN FOOTINGS SHALL MATCH VERTICAL COLUMN OR WALL REINFORCING.

   B. WHERE WALL REINFORCING IS NOT SHOWN, PROVIDE THE FOLLOWING MINIMUM WALL REINFORCING:

WALL THICKNESS	HORIZONTAL STEEL	VERTICAL STEEL
6" AND 8"	#4 @ 12"	#4 @ 18"
10" AND 12"	#4 @ 16" E.F.	#4 @ 18" E.F.

   C. PROVIDE CORNER BARS AT WALL AND FOOTING CORNERS TO MATCH HORIZONTAL REINFORCING. MINIMUM LENGTH OF EACH LEG TO BE 2' 0" UNLESS SHOWN OTHERWISE.

   D. CAST IN CONTINUOUS DOVETAIL ANCHOR SLOTS ON VERTICAL SURFACES WHERE MASONRY CONSTRUCTION ABUTS CONCRETE CONSTRUCTION. INSTALL SLOTS AT 24" O.C. HORIZ. WHERE MASONRY AND CONCRETE SURFACES ARE PARALLEL. INSTALL SLOTS AT CENTERLINE OF PERPENDICULAR INTERSECTIONS.

   E. PROVIDE LEAN CONCRETE (f'c'= 1500 PSI) UNDER FOUNDATIONS FOR ACCIDENTAL OVER-EXCAVATION, SOFT SPOTS, AND TRENCHES.

   F. ALL WALL FOOTING REINFORCING SHALL EXTEND TO CENTERLINE OF COLUMN FOOTINGS.

25. MECHANICAL BAR SPLICE DEVICES THAT PROVIDE A FULL TENSION SPLICE WITH A CAPACITY OF 125 PERCENT OF THE BAR YIELD STRENGTH MAY BE USED. ALL SPLICES SHALL BE VISUALLY INSPECTED BY A QUALIFIED INSPECTOR TO VERIFY THAT THE SPLICE HAS BEEN MADE PROPERLY.

26. CONCRETE SLABS SHALL BEAR A MINIMUM OF 4" ON MASONRY WALLS, UNLESS NOTED OTHERWISE.

27. BONDBREAKER MATERIAL SHALL BE 30 POUND FELT PAPER.

28. DETERMINE SIZE AND LOCATION OF MECHANICAL EQUIPMENT, AND MAKE PROVISIONS FOR BOLTS, SLEEVES, PADS, ETC., IN ACCORDANCE WITH THE MANUFACTURER'S CERTIFIED DRAWINGS. THIS WORK SHALL BE COORDINATED WITH THE TRADES INVOLVED.

29. CONCRETE FIELD QUALITY CONTROL, INSPECTION, AND TESTING:

   A. THE OWNER SHALL EMPLOY A TESTING LABORATORY TO PERFORM TESTS AND SUBMIT TEST AND INSPECTION REPORTS. REFER TO PROJECT SPECIFICATIONS FOR FIELD QUALITY CONTROL REQUIREMENTS. PROVIDE SPECIAL INSPECTIONS PER OBC TABLE 1704.4.

   B. PROVIDE REPORTS OF INSPECTION AND TESTING RESULTS TO THE OWNER'S REPRESENTATIVE.

MASONRY WORK:

1. MASONRY WORK SHALL CONFORM TO THE LATEST EDITIONS OF THE REFERENCES AND STANDARDS LISTED BELOW, EXCEPT AS MODIFIED HEREIN, IN ADDITION TO ALL OTHER REQUIREMENTS OF THE CONTRACT DOCUMENTS AND STANDARD PRACTICES.

   A. NATIONAL CONCRETE MASONRY ASSOCIATION (NCMA)

   B. AMERICAN CONCRETE INSTITUTE, ACI-ASCE COMMITTEE 530. (ACI)

2. CONCRETE MASONRY UNITS SHALL BE MEDIUM WEIGHT UNITS WITH A DRY NET WEIGHT OF NOT MORE THAN 115 PCF.

3. HOLLOW AND SOLID CONCRETE MASONRY UNITS SHALL CONFORM WITH ASTM C90 WITH A MINIMUM COMPRESSIVE STRENGTH OF 1900 PSI, EACH UNIT, NET CROSS-SECTIONAL AREA.

4. MORTAR FOR LOAD-BEARING WALLS, EXTERIOR WALLS, SHEAR WALLS, AND VERTICALLY REINFORCED MASONRY WALLS SHALL BE ASTM C270 TYPE S, WITH A MINIMUM COMPRESSIVE STRENGTH OF 1800 PSI IN 28 DAYS.

5. MORTAR FOR PARTITIONS AND NON-BEARING WALLS MAY BE ASTM C270 TYPE N, WITH A MINIMUM COMPRESSIVE STRENGTH OF 750 PSI IN 28 DAYS.

6. GROUT TO FILL CORES SHALL CONFORM WITH ASTM C476, WITH A MINIMUM COMPRESSIVE STRENGTH OF 3000 PSI IN 28 DAYS.

7. MAXIMUM HEIGHT OF GROUT POUR SHALL BE 4'-0" UNLESS CLEANOUT OPENINGS ARE PROVIDED AT THE BOTTOM OF ALL CELLS TO BE FILLED.

8. REINFORCED MASONRY - WHERE VERTICAL BARS ARE TO BE GROUTED INTO CORES, THE FOLLOWING REQUIREMENTS APPLY:

   A. VERTICAL REINFORCEMENT SHALL BE AS NOTED ON THE DRAWINGS WITH CELLS FILLED WITH COARSE GROUT. THE FIRST CELL AT CORNERS AND END WALLS SHALL BE GROUTED AND REINFORCED. THE FIRST CELL NEXT TO AN OPENING SHALL BE GROUTED AND REINFORCED.

9. ALL UNITS SHALL BE LAID WITH FULL MORTAR COVERAGE ON HEAD, BED (FACE SHELLS), WEBS (AT REINFORCED CORES), AND COLLAR JOINTS, UNLESS OTHERWISE NOTED.

10. ALL MASONRY WALLS SHALL HAVE VERTICAL CONTROL JOINTS A MAXIMUM SPACING OF 24'-0" TYPICAL UNLESS NOTED. COORDINATE ALL LOCATIONS OF CONTROL JOINTS WITH THE ARCHITECTURAL DRAWINGS. DO NOT LOCATE CONTROL JOINTS WITHIN 24" OF LOAD BEARING MEMBERS.

11. DO NOT USE CALCIUM CHLORIDE OR ANY ADDITIVE THAT CONTAINS CALCIUM CHLORIDE IN THE MORTAR OR GROUT.

12. WALL CONSTRUCTION UNDER MASONRY-BEARING STRUCTURAL MEMBERS SHALL BE AS FOLLOWS, UNLESS NOTED OTHERWISE:

   A. SOLID MASONRY OR MASONRY GROUTED SOLID, 32" LONG AND 24" HIGH, CENTERED UNDER EACH WALL BEARING STEEL BEAM.
   B. CONTINUOUS SOLID MASONRY OR MASONRY GROUTED SOLID, 8" HIGH, UNDER WALL BEARING PRECAST OR CAST_IN_PLACE CONCRETE SLABS.

13. ALL MASONRY WALLS SHALL HAVE GALVANIZED HORIZONTAL JOINT REINFORCING OF ONE OF THE FOLLOWING:

   A. LADDER TYPE, #9 GAGE SIDE AND CROSS RODS, FOR INTERIOR NON-BEARING WALLS AND PARTITIONS, SPACED 16" ON CENTER VERTICALLY.
   B. LADDER TYPE, 3/16" SIDE RODS AND 3/16" CROSS RODS, FOR ALL EXTERIOR WALLS, BEARING WALLS, SHEAR WALLS, AND VERTICALLY REINFORCED OR GROUTED WALLS, SPACED 16" ON CENTER VERTICALLY.

14. CONVENTIONAL REINFORCING BARS, HORIZONTAL AND VERTICAL, SHALL BE A615 GRADE 60. REINFORCING BAR LAP SPLICES AND ANCHORAGE SHALL BE PER ACI 530 REQUIREMENTS.

15. PROTECT MASONRY FROM FREEZING WHEN THE TEMPERATURE IS 40 DEG FAHRENHEIT OR LESS. DO NOT USE FROZEN MATERIALS OR MATERIALS MIXED OR COATED WITH ICE OR FROST. DO NOT BUILD ON FROZEN WORK. REMOVE AND REPLACE MASONRY WORK DAMAGED BY FROST OR FREEZING.

16. TEMPORARILY BRACE ALL MASONRY WALLS TO PROVIDE STABILITY DURING CONSTRUCTION UNTIL THE DESIGNED STRUCTURE IS COMPLETE AND CAN STABILIZE THE WALLS.

17. PREMIXED MASONRY CEMENT MORTARS SHALL NOT BE PERMITTED.

18. MASONRY FIELD QUALITY CONTROL, INSPECTION, AND TESTING:

   A. THE OWNER SHALL ENGAGE AN INDEPENDENT TESTING AND INSPECTION AGENCY TO PERFORM TESTS AND SUBMIT TEST AND INSPECTION REPORTS. REFER TO PROJECT SPECIFICATIONS FOR FIELD QUALITY CONTRTOL REQUIREMENTS. PROVIDE LEVEL 1 SPECIAL INSPECTIONS PER OBC.

   B. THE TESTING AGENCY SHALL CONDUCT AND INTERPRET THE TESTS AND STATE IN EACH REPORT WHETHER THE SPECIMENS COMPLY WITH THE REQUIREMENTS STATED HEREIN OR ON THE DRAWINGS OR BOTH, AND SPECIFICALLY STATE ANY DEVIATIONS. KEEP A COMPLETE JOB RECORD OF DAILY TEMPERATURE AND WEATHER CONDITIONS. CORRECT DEFICIENCIES IN WORK WHICH INSPECTIONS AND LABORATORY TEST REPORTS HAVE INDICATED NOT TO BE IN COMPLIANCE WITH REQUIREMENTS. PERFORM ADDITIONAL TESTS, AT CONTRACTOR'S EXPENSE, AS MAY BE NECESSARY TO RECONFIRM ANY NON-COMPLIANCE OF THE ORIGINAL WORK, AND AS MAY BE NECESSARY TO SHOW COMPLIANCE OF CORRECTED WORK.

STRUCTURAL STEEL:

1. DETAIL, FABRICATE AND ERECT STRUCTURAL STEEL IN ACCORDANCE WITH THE AISC MANUAL OF STEEL CONSTRUCTION, THIRTEENTH EDITION (ALLOWABLE STRENGTH DESIGN), AWS D1.1, AND OTHER CODES, STANDARDS, AND SPECIFICATIONS EXCEPT AS EXPLICITLY MODIFIED HEREIN. THE FOLLOWING NOTES APPLY TO ALL STRUCTURAL STEEL EXCLUSIVE OF THE PRE-ENGINEERED METAL BUILDING (PEMB). SEE THE PEMB SPECIFICATION AND THE PEMB DRAWINGS FOR STRUCTURAL STEEL REQUIREMENTS FOR THE PEMB.

2. CONTRACTOR RESPONSIBLE FOR ALL MISCELLANEOUS/ORNAMENTAL STEEL NOT SHOWN ON STRUCTURAL DRAWINGS.

3. STRUCTURAL STEEL: ASTM A992, GRADE 50, ROLLED STEEL WIDE FLANGE SHAPES
   ASTM A36; ROLLED STEEL PLATES, SHAPES, BARS, AND RODS
   ASTM A500, GRADE B; STRUCTURAL TUBING
   ASTM A53, TYPE E OR S, GRADE B; STEEL PIPE

4. BOLTS: 3/4" DIAMETER MINIMUM, UNLESS NOTED OTHERWISE.
   ASTM A325 BEARING TYPE FOR ALL BEAM, COLUMN, AND JOIST CONNECTIONS
   ASTM F1554, GRADE 36 FOR ALL ANCHOR BOLTS

5. WELDED CONNECTIONS SHALL CONFORM TO THE LATEST REVISED CODE OF THE AMERICAN WELDING SOCIETY, AWS D1.1 AND SHALL BE PERFORMED BY CERTIFIED WELDERS IN ACCORDANCE WITH THE AMERICAN WELDING SOCIETY STANDARDS.

6. WELDING ELECTRODES SHALL BE E-70XX OR BETTER. FOR WELDING SYMBOLS WITH NO LENGTH DIMENSION GIVEN, THE WELDING SHALL BE CONTINUOUS BETWEEN ABRUPT CHANGES IN DIRECTION.

7. COORDINATE STRUCTURAL DRAWINGS WITH ALL DRAWINGS FOR CLEARANCES, ATTACHMENTS, ETC.

8. PROVIDE ANGLE WALL ANCHORS, PER PART 4, AISC MANUAL OF STEEL CONSTRUCTION, FOR BEAMS BEARING ON MASONRY WALLS. ANGLE ANCHORS SHALL BE WELDED TO BEAMS.

9. STEEL BEAMS SHALL BEAR A MINIMUM OF 5" ON MASONRY, UNLESS NOTED OTHERWISE.

10. CONNECTIONS: WELD OR BOLT CONNECTIONS, AS INDICATED:

   A. CONNECTIONS NOT DETAILED ON THE DRAWINGS SHALL CONFORM TO THE REQUIREMENTS OF THE CITED AISC SPECIFICATION.

   B. WHERE THE REACTION VALUES OF BEAMS ARE NOT SHOWN ON THE DRAWINGS, EACH END CONNECTION SHALL BE DESIGNED TO SUPPORT 55% OF THE TOTAL UNIFORM LOAD CAPACITY DERIVED FROM THE ASD VALUE OF THE TABLES AND FORMULA OF THE MAXIMUM TOTAL UNIFORM LOAD IN PART 3, THIRTEENTH EDITION, OF THE AISC MANUAL OF STEEL CONSTRUCTION FOR THE GIVEN MEMBER SIZE, SPAN, AND YIELD STRENGTH.

   C. CONFORM WITH NOTES ON "TYPICAL CONCRETE SLAB CONSTRUCTION REQUIREMENTS TO BE USED WITH COMPOSITE BEAM AND STEEL DECK" FOR DETERMINING VALUES OF END REACTIONS FOR COMPOSITE BEAMS WHERE THOSE VALUES ARE NOT SHOWN ON THE DRAWINGS.

   D. THE MINIMUM LENGTH OF CONNECTION ANGLES SHALL BE EQUAL TO ONE_HALF THE DEPTH OF THE MEMBER TO BE SUPPORTED. ANGLES SHALL BE LONGER IF REQUIRED TO SUPPORT DESIGN LOAD SPECIFIED ABOVE.

   E. ONE-SIDED CONNECTIONS WILL NOT BE PERMITTED, UNLESS SPECIFICALLY DETAILED ON THE DRAWINGS OR SEALED DESIGN CALCULATIONS ARE SUBMITTED WITH THE SHOP DRAWINGS.

   F. THE MINIMUM NUMBER OF BOLTS IN BOLTED CONNECTIONS SHALL BE TWO (2) BOLTS. PROVIDE ADDITIONAL BOLTS AS REQUIRED FOR DESIGN LOADS SPECIFIED ABOVE.

   G. MINIMUM ¼" FILLET WELD SHALL APPLY UNLESS NOTED OTHERWISE.

   H. MINIMUM SIZE OF CLIP ANGLE SHALL BE 3x3x5/16" UNLESS NOTED OTHERWISE OR REQUIRED BY LOADING.

   I. UTILIZE THROUGH PLATES FOR ALL CONNECTIONS TO TUBES AND PIPES UNLESS SHOWN OTHERWISE.

   J. TRUSS AND BRACING MEMBER CONNECTIONS SHALL BE DESIGNED FOR THE FORCES INDICATED ON THE DRAWINGS.

11. ALL COLUMNS SHALL HAVE A MINIMUM OF FOUR (4) ANCHOR BOLTS. POSTS - AS DEFINED BY OSHA - MAY HAVE TWO ANCHOR BOLTS.

12. BEAMS SHALL BE ERECTED STRAIGHT. SWEEPS SHALL BE A MAXIMUM OF 1" MEASURED AT MIDSPAN OF BEAMS.

13. THE FRAMING SHALL BE CARRIED UP TRUE AND PLUMB AND TEMPORARY BRACING SHALL BE INSTALLED AND SHALL REMAIN IN PLACE UNTIL CONNECTIONS OF ALL MEMBERS ARE FINAL AND ALL DECK IS COMPLETELY ERECTED AND WELDED IN PLACE.

14. NON-METALLIC, NON-SHRINK GROUT UNDER ALL COLUMN PLATES AND BEAM BEARINGS SHALL COMPLY WITH ALL REQUIREMENTS OF ASTM C 1107.

15. ALL STRUCTURAL STEEL MEMBERS SHALL RECEIVE ONE SHOP COAT OF PRIMER PAINT SSPC-PAINT 15 RED IRON OXIDE.

16. ALL STRUCTURAL STEEL MEMBERS EXPOSED TO THE EXTERIOR SHALL BE HOT DIP GALVANIZED. THIS INCLUDES, BUT IS NOT LIMITED TO, MASONRY LINTELS AND SHELF ANGLES AND ANY OTHER ITEM INDICATED ON THE ARCHITECTURAL OR STRUCTURAL DRAWINGS.

17. ALL STRUCTURAL STEEL MEMBERS ADJACENT TO OR BUILT INTO MASONRY CONSTRUCTION SHALL BE PROVIDED WITH 12 GAGE GALVANIZED WELD_ON CHANNEL SLOTS AND 3/16 X 1-1/4 GALVANIZED ANCHORS.

18. ALL STAIRS, STRINGERS, LANDINGS AND STAIR SUPPORTS ARE TO BE DESIGNED AND DETAILED BY THE STAIR MANUFACTURER. STAIR MANUFACTURER TO SUBMIT DESIGN CALCULATIONS AND DRAWINGS STAMPED AND SIGNED BY THE DESIGN ENGINEER REGISTERED IN THE PROJECT STATE.

STEEL LINTEL SCHEDULE

   A. THE FABRICATOR SHALL SUPPLY LOOSE LINTEL ANGLES OVER ALL MASONRY OPENINGS AND RECESSES UNLESS NOTED OTHERWISE. REFER TO ARCHITECTURAL AND HVAC DRAWINGS FOR LOCATION, NUMBER AND SIZES OF OPENINGS. LINTELS NOT SCHEDULED ON DRAWINGS SHALL CONSIST OF A SINGLE ANGLE WITH A 3 1/2" LEG HORIZONTAL FOR EACH 4" OF WALL THICKNESS, ANGLES SHALL BE AS FOLLOWS:

MASONRY OPENING	ANGLE OR BEAM SIZE	BEARING EACH END
4'-0" OR LESS	3 1/2" x 3 1/2 x 5/16"	6"
4'-1" TO 6'-0"	4 x 3 1/2" x 5/16"	8"
6'-1" TO 7'-0"	5 x 3 1/2" x 3/8"	8"
7'-1" TO 8'-0"	6 x 3 1/2" x 5/16"	8"
8'-1" TO 10-0"	W8 x 31 W/ 5/16" BOTTOM PLATE	8"
10'-1" TO 12'-0"	W16 x 26 W/ 5/16" BOTTOM PLATE	12"

   B. ALL LINTELS IN ALL WYTHES OF EXTERIOR WALLS SHALL BE HOT DIP GALVANIZED.

   C. ALL ANGLE LINTELS SHALL HAVE 8" OF SOLID MASONRY BELOW BEARING END, UNLESS NOTED OTHERWISE.

   D. ALL BEAM LINTELS SHALL HAVE 16" OF SOLID MASONRY BELOW BEARING END, UNLESS NOTED OTHERWISE.

   E. BOTTOM PLATES ON BEAMS SHALL BE 1" LESS IN WIDTH THAN THE WALL THICKNESS, AND EXTEND FOR THE FULL LENGTH OF BEAM INCLUDING THE BEARING ENDS, UNLESS NOTED OTHERWISE.

   F. BOTTOM PLATE SHALL BE WELDED TO BEAM WITH A 1/4" FILLET WELD 3" LONG ON BOTH SIDES AT 9" ON CENTER. STAGGER PLACEMENT OF WELDS FROM SIDE TO SIDE.

19. STRUCTURAL STEEL FIELD QUALITY CONTROL, TESTING, AND INSPECTION

   A. GENERAL

   1) THE OWNER SHALL ENGAGE AN INDEPENDENT TESTING AND INSPECTION AGENCY, TO PERFORM INSPECTIONS AND TESTS AND SUBMIT TEST AND INSPECTION REPORTS. REFER TO PROJECT SPECIFICATIONS FOR FIELD QUALITY CONTROL REQUIREMENTS. PROVIDE SPECIAL INSPECTIONS PER OBC SECTION 1704.3 AND TABLE 1704.3.

   2) THE TESTING AGENCY SHALL CONDUCT AND INTERPRET THE TESTS, STATE IN EACH REPORT WHETHER THE TEST SPECIMENS COMPLY WITH THE CONTRACT DOCUMENTS, AND SPECIFICALLY STATE ANY DEVIATIONS. REPORTS SHALL BE DELIVERED TO THE OWNER'S REPRESENTATIVE ON A TIMELY SCHEDULE.

   3) CORRECT DEFICIENCIES IN STRUCTURAL STEEL WORK WHICH INSPECTIONS AND LABORATORY TEST REPORTS INDICATE ARE NOT IN COMPLIANCE WITH CONSTRUCTION DOCUMENTS. PERFORM ADDITIONAL TESTS, AT CONTRACTOR'S EXPENSE, AS MAY BE NECESSARY TO RECONFIRM ANY DEVIATION OF THE ORIGINAL WORK, AND WHICH MAY BE NECESSARY TO SHOW COMPLIANCE OF CORRECTED WORK.

STEEL DECK:

1. STEEL DECK FABRICATION AND ERECTION SHALL CONFORM TO THE LATEST STEEL DECK INSTITUTE SPECIFICATIONS. THE FOLLOWING NOTES APPLY TO ALL STEEL DECK EXCLUSIVE OF THE PRE-ENGINEERED METAL BUILDING (PEMB). SEE THE PEMB SPECIFICATION AND THE PEMB DRAWINGS FOR STEEL DECK, ROOFING, AND SIDING REQUIREMENTS FOR THE PEMB.

2. DECKING SHALL INCLUDE ALL MISCELLANEOUS HANGER TABS, CLOSURE PIECES, POUR STOPS, DRAIN SUMP PANS, REINFORCING AROUND OPENINGS, ETC., REQUIRED TO MAKE A COMPLETE JOB. MISCELLANEOUS ITEMS SHALL BE GALVANIZED.

3. ALL DECK SHALL BE GALVANIZED, UNLESS NOTED OTHERWISE.

4. PLACE DECK UNITS ON SUPPORTING STEEL FRAMEWORK IN LENGTHS TO SPAN 4 OR MORE SUPPORTS (3 SPANS). LAP ENDS OF DECK NOT LESS THAN 2". SIDELAP INTERLOCKS SHALL NOT BE STRETCHED OR CONTRACTED. DECK SHALL BEAR A MINIMUM OF 3" ON SUPPORTS.

5. DECK SHALL BE PUDDLE WELDED (5/8" DIA. MINIMUM) TO THE SUPPORTS AT 12" CENTERS MAXIMUM WITH THE FIRST AND LAST RIBS OF EACH SHEET WELDED TO THE SUPPORTS. SIDE LAPS SHALL BE SCREWED WITH #14 SELF TAPPING SCREWS AT 36" ON CENTER. THE HEADED STUDS IN COMPOSITE CONSTRUCTION MAY BE SUBSTITUTED FOR WELDS.

   B. ALL DECK THAT IS LIGHTER THAN 22 GAGE SHALL USE WELDING WASHERS FOR CONNECTION OF DECK TO STEEL SUPPORTS.

6. DECK SHALL HAVE THE FOLLOWING MINIMUM PROPERTIES:

   ROOF DECK: (NOT USED) FLOOR DECK: SEE PLANS

7. NO LOADS SHALL BE HUNG FROM THE ROOF DECK. CEILINGS, AIR DIFFUSERS AND LIGHTS MAY BE HUNG FROM THE FLOOR DECK AFTER THE CONCRETE SLAB HAS REACHED 75% OF ITS DESIGN STRENGTH.

8. TESTING OF STEEL DECK AND HEADED STUDS

   A. THE OWNER SHALL ENGAGE AN INDEPENDENT TESTING AND INSPECTION AGENCY TO CERTIFY THE WELDS BEING PLACED CONFORM TO THE CONTRACT DOCUMENTS.

   B. ANY WELDING OR STUDS FOUND UNSATISFACTORY SHALL BE CORRECTED BY THE CONTRACTOR AT NO ADDITIONAL EXPENSE TO THE OWNER.

quasar energy group

quasar energy group
7624 Riverview Road
PO Box 31023
Cleveland OH 44141
Phone: 216.986.9999

Scale: SEE DETAIL

This drawing contains valuable confidential and proprietary information that belongs to quasar energy group, llc ("quasar"), and is subject to a separate Confidentiality and Nondisclosure Agreement. quasar is the author and owner of this drawing, and retains all common law, statutory and other rights and privileges with respect hereto, including copyrights. The information contained herein may not at any time be used for any unauthorized purpose, nor reproduced by or provided to any third party, without the prior written consent of quasar.

STATE OF OHIO
ALAN B. JOHNSON
46333
REGISTERED
PROFESSIONAL ENGINEER

AS BUILT

Rev.	ECN Number	Date
2		
1		
0	AS BUILT	__/__/__

Drawing Name:
STRUCTURAL NOTES

Project Name and Address:
0058-CAR-OH-11

RINGLER FARMS
ADS Facility
ecoFarmsystem 980

2277 County Road 156
Cardington, OH 43315-9742

Area: __
Author: RAMII
Calculated: __
Checked: RN
Sheet Number: S-2

© 2012, Quasar Energy Group, LLC. All rights reserved.

P:\SBE Projects\0058-CAR-OH-11 - Ringler Farms\BUILDING DRAWINGS\CURRENT DRAWINGS (AS BUILT)\RINGLER FARMS STRUCTURAL.dwg
11/15/2013 3:48 PM

WALL FOOTING SCHEDULE:

FTG. MARK	WIDTH	DEPTH	BOTTOM REINF.	TOP REINF.	NOTES
WF1	2'-0	1'-0" (MIN.)	4 - #4	2 - #6	SEE SECTIONS. EXTEND REINFORCING CONTINUOUS THRU COL. FOOTINGS.

COLUMN FOOTING SCHEDULE:

FTG. MARK	WIDTH	DEPTH	BOTTOM REINF.	TOP REINF.	NOTES
F1	4'-0" x 4'-0"	2'-4"	7 - #4 EW	7 - #4 EW	SEE SECTIONS. EXTEND WALL FTG. REINFORCING CONTINUOUS THRU COL. FTGS.
F2	5'-0" x 5'-0"	4'-6"	#6's @ 12" C/C EW	#6's @ 12" C/C EW	SEE SECTIONS. EXTEND WALL FTG. REINFORCING CONTINUOUS THRU COL. FTGS. PAD TO BE EARTH FORMED ON OUTSIDE OF BUILDING WALL.
FOOTING SIZES WILL NEED TO BE VERIFIED ONCE THE ACTUAL BUILDING COLUMN REACTIONS ARE OBTAINED FROM THE PRE-ENGINEERED BUILDING SUPPLIER.					

PIER CONSTRUCTION NOTES

1. ALL CONCRETE TO BE SUPPLIED AND CAST IN ACCORDANCE WITH ACI 301 & ACI 318.
2. CONCRETE TO BE 4,000 PSI, REINFORCING STEEL GRADE 60 (60 KSI).
3. MINIMUM CONCRETE COVER FOR REINFORCING STEEL - 3 INCHES.
4. THE TOP OF THE CONCRETE FOUNDATION SHALL BE A MINIMUM OF 6" ABOVE THE ADJACENT GRADE, THE MINIMUM DEPTH OF THE CONCRETE PIER INTO THE SOIL TO BE 3'-8".
5. THE LEVELNESS OF THE CIRCUMFERENCE SHALL NOT VARY BY MORE THAN +/- 1/4" FROM AN ESTABLISHED PLANE.
6. FOUNDATIONS PROPORTIONED FOR 3,000 PSF NET SOIL BEARING PRESSURE. SEISMIC SITE CLASS DEFINITION "C" USED, PER OBC SECTION 1613.
7. ALL WELDING PER AWS STRUCTURAL CODE, USING E70 SERIES ELECTRODES.

FOUNDATION PLAN NOTES:

1. COLUMN LINE KEY:
   - (X) = GIRT LINE/INSIDE FACE OF SIDING
   - (X) = CENTER LINE OF COLUMNS
2. PERIMETER COLUMN LINES WILL VARY - SEE PRE-ENGINEERED BUILDING MANUFACTURER DRAWINGS. PERIMETER COLUMN CENTERLINES MAY BE CENTERLINES OF BOLT PATTERNS AND NOT CENTERLINE OF BASEPLATES. PERIMETER COLUMN CENTERLINES MAY BE DIFFERENT FOR SIDEWALL AND CORNER COLUMNS ON THE SAME LINE.
3. ELEVATIONS SHOWN ON PLAN ARE TOP OF FOOTING ELEVATIONS, REFERENCED FROM FLOOR ELEVATION= 0'-0". ELEVATIONS NOTED THUS (+) OR (-) INDICATE DISTANCE ABOVE OR BELOW ELEVATION 0'-0". SEE CIVIL DWGS. FOR EL. 0'-0" REFERENCE TO SITE ELEVATIONS.
   FOOTING KEY:
   - WALL FOOTING: WF__ (T/FTG. EL)
   - COLUMN FOOTING: F__ (T/FTG. EL)
   - COLUMN PIER: P____ (T/PIER EL)
4. FS = FROST SLAB. SEE ARCH. DWG. FOR LOCATION.
5. ROUND INFILL AT COLUMNS - PROVIDE 3" MIN. CONCRETE COVER AROUND COLUMNS & BASEPLATES BELOW GRADE.
6. DESIGN OF THE PLANT BUILDING INCLUDING THE FOUNDATION, IS THE RESPONSIBILITY OF THE CONTRACTOR SUPPLYING THE PRE-ENGINEERED METAL BUILDING. DESIGN DRAWINGS SEALED BY A LICENSED OHIO PROFESSIONAL ENGINEER MUST BE SUBMITTED TO THE ENGINEER AND THE OHIO BUILDING CODE (OBC) OFFICIAL AND APPROVED BEFORE IT MAY BE CONSTRUCTED. THE SUBMITTAL MUST COMPLY WITH THE OHIO BUILDING CODE (OBC). EGRESS REQUIREMENTS, ELECTRICAL, PLUMBING AND HVAC WILL BE AS SHOWN ON THIS SET OF PROJECT DOCUMENTS. SITE DESIGN INFORMATION IS AS SHOWN ON THIS SET OF PROJECT DOCUMENTS.
7. COORDINATE FOUNDATIONS WITH BUILDING ENTRIES. STEP FOOTING BELOW UTILITIES OR PROVIDE SLEEVES WHERE UTILITIES PASS BENEATH FOOTINGS

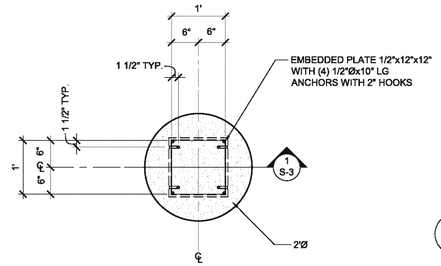

4 TYPICAL CHP PIER DETAIL
SCALE: 3/4"=1'-0"

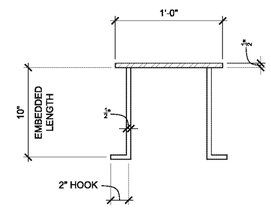

3 CHP EMBEDDED PLATE/ANCHOR DETAIL
SCALE: 1 1/2"=1'-0"

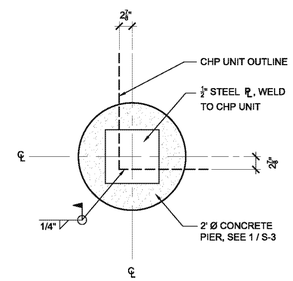

2 TYPICAL CHP/PIER WELDING DETAIL
SCALE: 3/4"=1'-0"

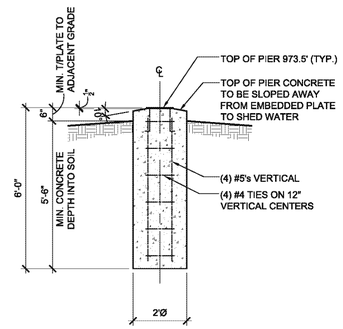

1 CHP PIER
SCALE: 3/8"=1'-0"

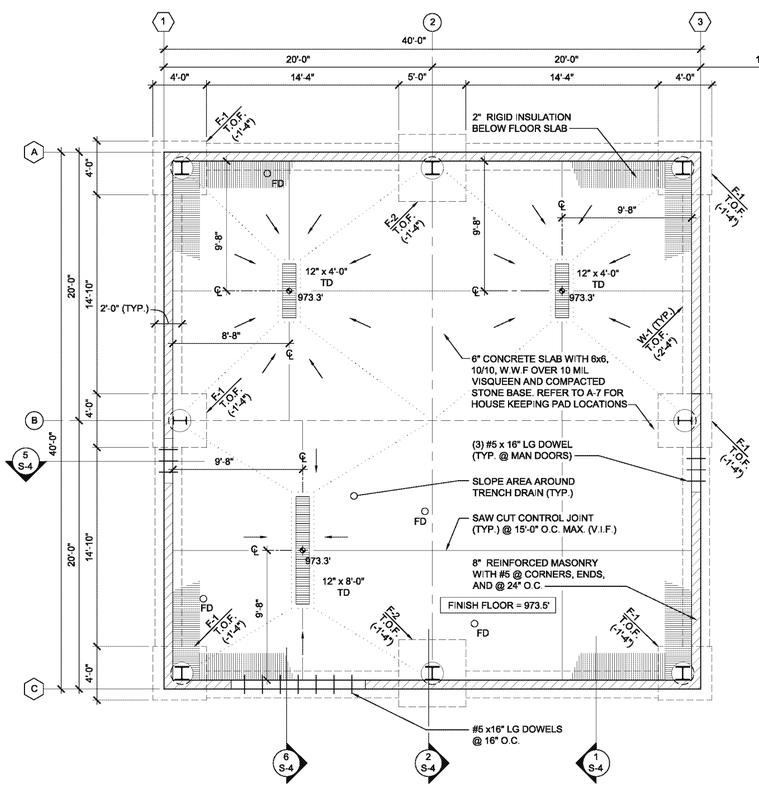

FOUNDATION PLAN
SCALE: 3/16"=1'-0"

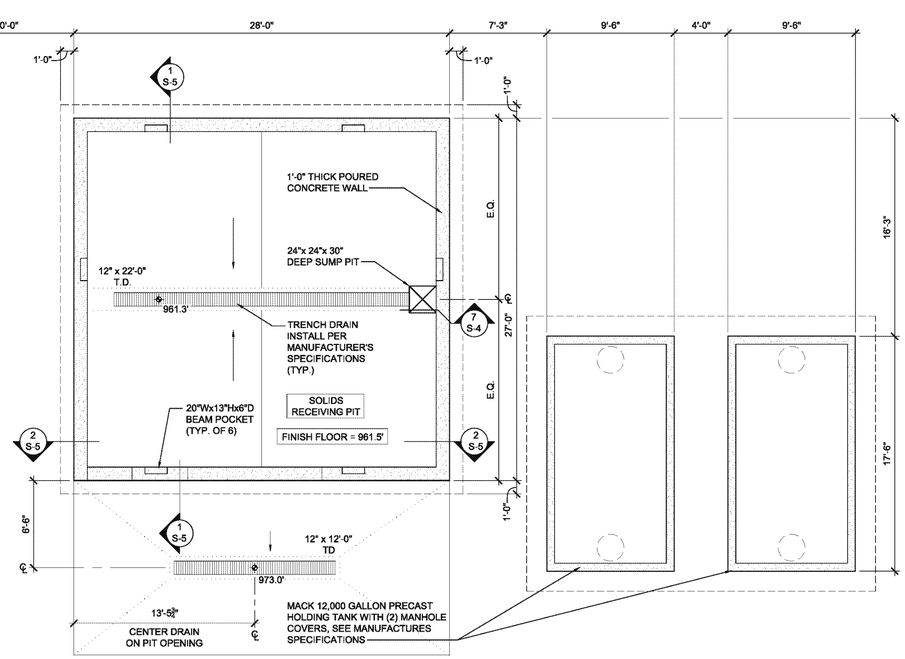

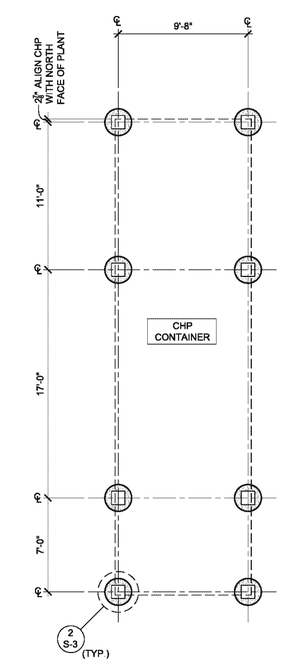

CHP FOUNDATION PLAN
SCALE: 3/16"=1'-0"

quasar energy group
7624 Riverview Road
PO Box 31023
Cleveland OH 44141
Phone: 216.986.9999

Scale: SEE DETAIL

This drawing contains valuable confidential and proprietary information that belongs to quasar energy group, llc ("quasar"), and is subject to a separate Confidentiality and Nondisclosure Agreement. quasar is the author and owner of this drawing, and retains all common law, statutory and other rights and privileges with respect hereto, including copyrights. The information contained herein may not at any time be used for any unauthorized purpose, nor reproduced by or provided to any third party, without the prior written consent of quasar.

STATE OF OHIO ALAN R. JOHNSON 46333 REGISTERED PROFESSIONAL ENGINEER

AS BUILT

Rev.	ECN Number	Date
2		
1		
0	AS BUILT	__/__/__

Drawing Name:
FOUNDATION PLAN
CHP PIER DETAILS

Project Name and Address:
0058-CAR-OH-11

RINGLER FARMS
ADS Facility
ecoFarmsystem 980

2277 County Road 156
Cardington, OH 43315-9742

Area: __
Author: RAMII
Calculated: __
Checked: RN
Sheet Number: S-3

© 2012, Quasar Energy Group, LLC. All rights reserved.

P:\SBE Projects\0058-CAR-OH-11 - Ringler Farms\BUILDING DRAWINGS\CURRENT DRAWINGS (AS BUILT)\RINGLER FARMS STRUCTURAL.dwg
11/19/2013 3:58 PM

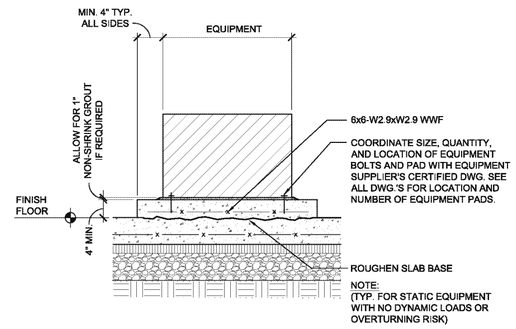

9 TYPICAL HOUSE KEEPING PAD SECTION

SCALE: N.T.S.

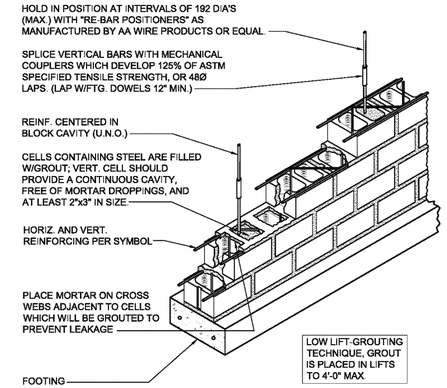

8 TYPICAL CONCRETE MASONRY REINFORCEMENT

SCALE: N.T.S.

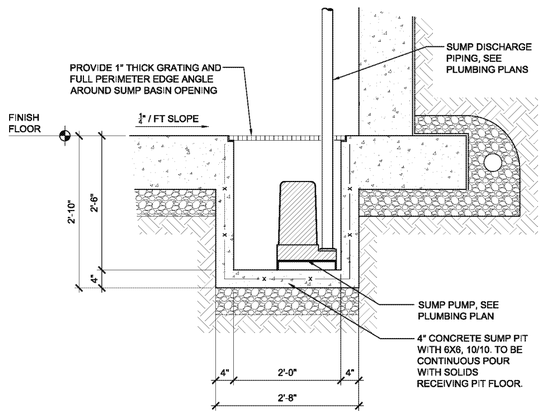

7 SUMP PIT SECTION

SCALE: 3/4"=1'-0"

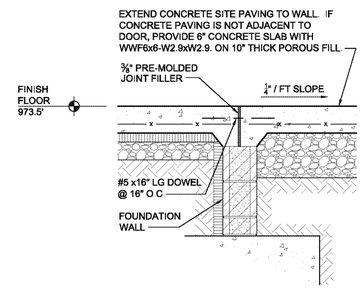

6 TYPICAL SECTION AT OVERHEAD DOORS

SCALE: 3/4"=1'-0"

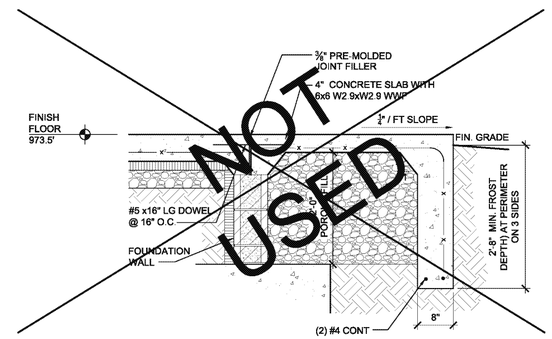

5 TYPICAL FROST SLAB SECTION AT MAN DOOR

SCALE: 3/4"=1'-0"

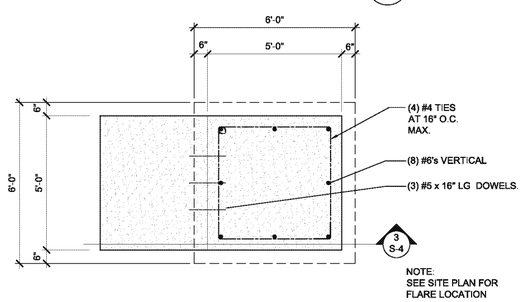

4 FLARE PAD PLAN

SCALE: 3/8"=1'-0"

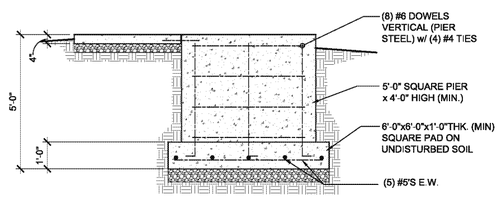

3 FLARE PAD SECTION

SCALE: 3/8"=1'-0"

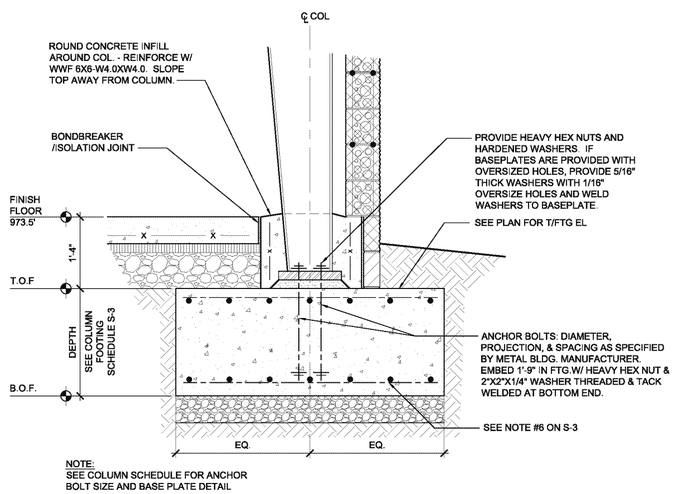

2 TYPICAL SPREAD FOOTING WITHOUT PIER

SCALE: 3/4"=1'-0"

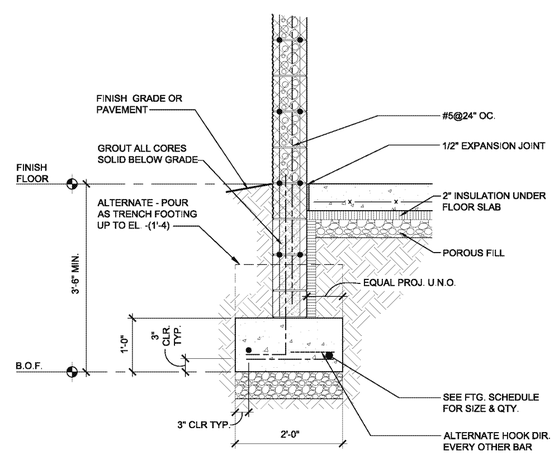

1 TYPICAL WALL SECTION

SCALE: 3/4"=1'-0"

quasar energy group
7624 Riverview Road
PO Box 31023
Cleveland OH 44141
Phone: 216.986.9999

Scale: SEE DETAIL

This drawing contains valuable confidential and proprietary information that belongs to quasar energy group, llc ("quasar"), and is subject to a separate Confidentiality and Nondisclosure Agreement. quasar is the author and owner of this drawing, and retains all common law, statutory and other rights and privileges with respect hereto, including copyrights. The information contained herein may not at any time be used for any unauthorized purpose, nor reproduced by or provided to any third party, without the prior written consent of quasar.

STATE OF OHIO
ALAN R. JOHNSON
46333
REGISTERED
PROFESSIONAL ENGINEER

AS BUILT

Rev.	ECN Number	Date
2		
1		
0	AS BUILT	__/__/__

Drawing Name:
FOUNDATION DETAILS
FLARE PAD DETAILS

Project Name and Address:
0058-CAR-OH-11

RINGLER FARMS
ADS Facility
ecoFarmsystem 980

2277 County Road 156
Cardington, OH 43315-9742

Area: _
Author: RAMII
Calculated: _
Checked: RN
Sheet Number: S-4

© 2012, Quasar Energy Group, LLC. All rights reserved.

P:\SBE Projects\0058-CAR-OH-11 - Ringler Farms\BUILDING DRAWINGS\CURRENT DRAWINGS (AS BUILT)\RINGLER FARMS STRUCTURAL.dwg
11/15/2013 3:58 PM

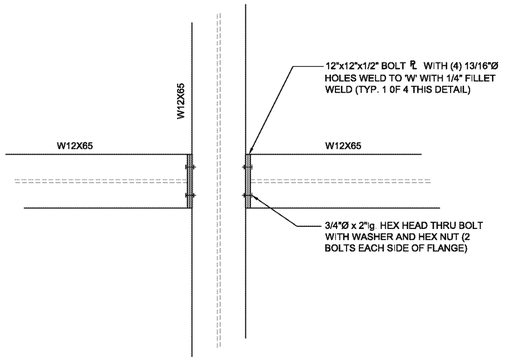

4 STEEL CONNECTION DETAIL

SCALE: 3/4" = 1'-0"

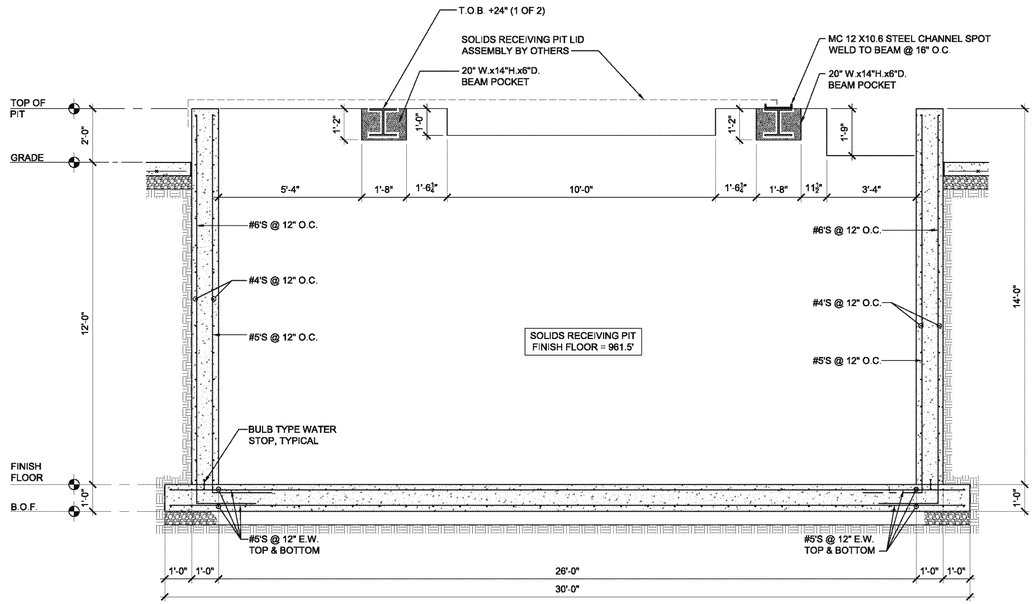

2 SOLIDS RECEIVING PIT SECTION

SCALE: 3/8" = 1'-0"

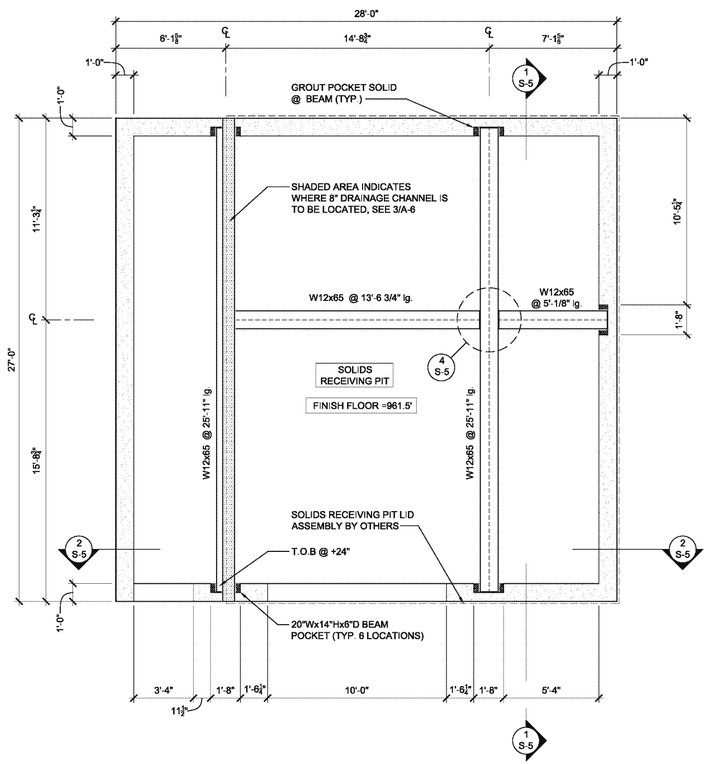

3 SOLIDS RECEIVING PIT LID STRUCTURAL PLAN

SCALE: 1/4" = 1'-0"

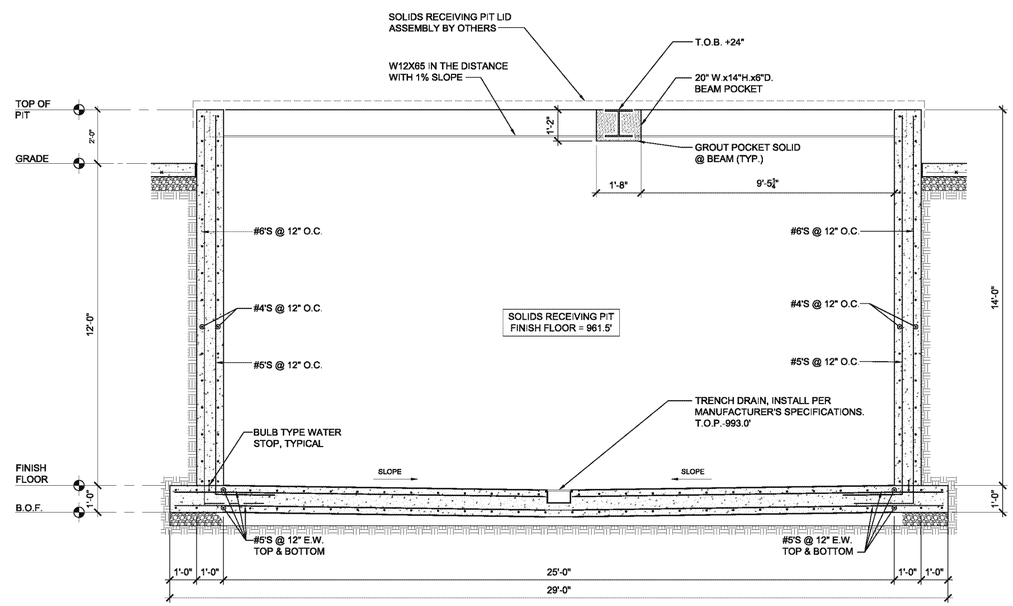

1 SOLIDS RECEIVING PIT SECTION

SCALE: 3/8" = 1'-0"

NOTE:
ALL (+/-) T.O.B. & T.O.P. DIMENSIONS ARE REFERENCED FROM ELEVATION 1005.2'
PLEASE NOTE THAT GRADE MAY VARY WITH SLOPE OF FINISHED PAVEMENT.
(TYP. @ SOLIDS RECEIVING PIT)

quasar energy group
7624 Riverview Road
PO Box 31023
Cleveland OH 44141
Phone: 216.986.9999

Scale: SEE DETAIL

This drawing contains valuable confidential and proprietary information that belongs to quasar energy group, llc ("quasar"), and is subject to a separate Confidentiality and Nondisclosure Agreement. quasar is the author and owner of this drawing, and retains all common law, statutory and other rights and privileges with respect hereto, including copyrights. The information contained herein may not at any time be used for any unauthorized purpose, nor reproduced by or provided to any third party, without the prior written consent of quasar.

STATE OF OHIO
ALAN R. JOHNSON
46333
REGISTERED
PROFESSIONAL ENGINEER

AS BUILT

Rev.	ECN Number	Date
2		
1		
0	AS BUILT	__/__/__

Drawing Name:
SOLIDS PIT SECTIONS AND DETAILS

Project Name and Address:
0058-CAR-OH-11

RINGLER FARMS
ADS Facility
ecoFarmsystem 980

2277 County Road 156
Cardington, OH 43315-9742

Area: --
Author: RAMII
Calculated: --
Checked: RN
Sheet Number: S-5

© 2012, Quasar Energy Group, LLC. All rights reserved.

P:\SBE Projects\0058-CAR-OH-11 - Ringler Farms\BUILDING DRAWINGS\CURRENT DRAWINGS (AS BUILT)\RINGLER FARMS STRUCTURAL.dwg
11/15/2013 3:48 PM

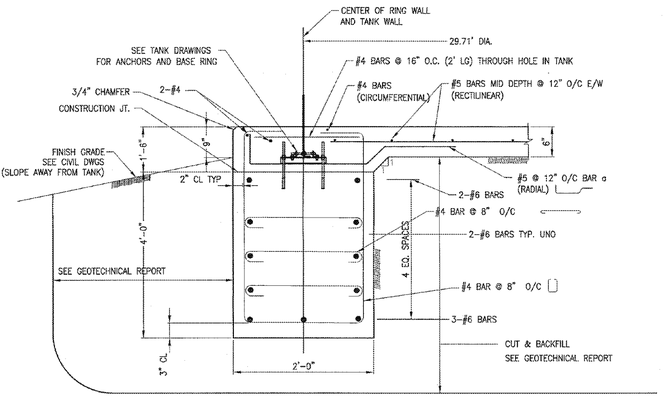

SECTION A/F1

(NOT TO SCALE)

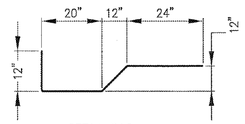

DETAIL BAR a

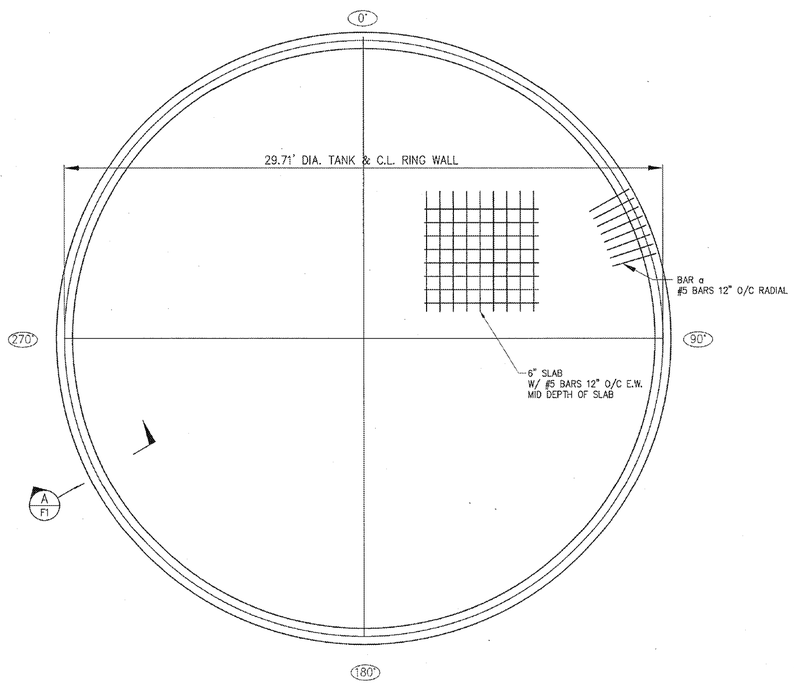

FOUNDATION PLAN VIEW

(NOT TO SCALE)

GENERAL NOTES

DESIGN CRITERIA

CODES:

- ACI 318 "BUILDING CODE REQUIREMENTS FOR REINFORCED CONCRETE"
- AWWA D-103 "FACTORY COATED BOLTED STEEL TANKS FOR WATER STORAGE"

CONCRETE 28-DAY STRENGTH

- STRUCTURAL CONCRETE-SLAB 4,000 PSI
- STRUCTURAL CONCRETE-RING WALL 4,000 PSI
- REINFORCING STEEL
  ALL BARS(DEFORMED) ASTM A615, GRADE 60 60,000 PSI
  WELDED WIRE FABRIC ASTM A185

CONCRETE

- ALL MATERIALS AND METHODS OF CONSTRUCTION SHALL BE IN ACCORDANCE WITH ACI 318 REQUIREMENTS.
- ALL CONCRETE SURFACES EXPOSED TO AIR, UNLESS OTHERWISE NOTED IN SPECIFICATIONS, SHALL BE TREATED WITH AN APPROPRIATE CURING COMPOUND AS SOON AS CEMENT FINISHING IS COMPLETED OR FORMS ARE REMOVED.
- ALL EXPOSED CORNERS OF CONCRETE SHALL HAVE A MINIMUM CHAMFER OF 3/4" UNLESS OTHERWISE NOTED.
- CONCRETE DELIVERED TO THE SITE SHOULD MEET TEMPERATURE REQUIREMENTS OF ASTM C94. CONCRETE SHOULD NOT BE PLACED UPON FROZEN SOILS OR SOILS WHICH CONTAIN FROZEN MATERIAL. CONCRETE SHOULD BE PROTECTED FROM FREEZING UNTIL THE NECESSARY STRENGTH IS ACHIEVED. FROST SHOULD NOT BE PERMITTED TO PENETRATE BELOW FOOTINGS BEARING ON FROST SUSCEPTIBLE SOIL SINCE SUCH FREEZING COULD HEAVE AND CRACK THE FOOTINGS.

UNLESS OTHERWISE NOTED OR DETAILED, ALL REBAR SPLICES SHALL BE IN ACCORDANCE WITH THE TABLE SHOWN BELOW:

CONCRETE REBAR SPLICES

BAR SIZE	4000 PSI SPLICE LENGTH (IN)
#3	16
#4	19
#6	31
#7	42
#8	55
#9	69
#10	86
#11	108

TOLERANCES

- THE TOP OF THE CONCRETE FOUNDATION SHALL BE A MINIMUM OF 6" ABOVE THE ADJACENT GRADE.
- THE TOP OF THE RING WALL SHALL BE LEVEL WITHIN +/- 1/8" IN ANY 30 FEET CIRCUMFERENCE UNDER THE SHELL.
- THE LEVELNESS OF THE CIRCUMFERENCE SHALL NOT VARY BY MORE THAN +/- 1/4" FROM AN ESTABLISHED PLANE.

FINISH

- THE TOP PORTION OF THE FOUNDATION TO A DEPTH OF 6" BELOW THE PROPOSED GROUND LEVEL, SHALL BE FINISHED TO A SMOOTH FORM FINISH IN COMPLIANCE WITH ACI-301. ANY SMALL HOLES MAY BE TROWELED OVER WITH MORTAR AS SOON AS POSSIBLE AFTER THE FORMS ARE REMOVED.

ANCHOR BOLTS

- NOT REQUIRED.

BASE SETTING RING

- IT IS THE RESPONSIBILITY OF THE CONTRACTOR TO LEVEL THE SETTING RING WITHIN +/- 1/16" OF LEVEL AND CONCENTRIC WITHIN +/- 1/4". THE CONTRACTOR SHALL LOCATE THE BASE -SETTING RING IN CONFORMANCE WITH THE MANUFACTURER'S DESIGN.
- CONTRACTOR SHALL INSTALL ELASTOMER WATER STOP AT BASE-SETTING RING PER MANUFACTURER'S SPECIFICATION.

REINFORCING STEEL

REINFORCEMENT SHALL CONFORM TO ASTM A615, GRADE 60 REQUIREMENTS.

ALL ACCESSORIES SHALL BE IN CONFORMANCE WITH ACI 315 REQUIREMENTS. REINFORCING STEEL SHALL HAVE THE FOLLOWING CLEAR COVER UNLESS OTHERWISE NOTED:

- CONCRETE CAST AGAINST EARTH 3"
- FORMED SURFACES IN CONTACT WITH SOIL, SEWAGE, WATER OR EXPOSED TO WEATHER 2"
- FORMED SURFACES NOT EXPOSED TO WEATHER OR IN CONTACT WITH SOIL:
  - SLABS, WALLS, AND JOISTS 1 1/2"
  - BEAMS AND COLUMNS 1 1/2"

GEOTECHNICAL REPORT:

INTERPRETATION OF THE CONTENTS OF THE REPORT IS THE CONTRACTORS RESPONSIBILITY.

SITE PREPARATION

- REMOVE ALL TOPSOIL AND ROOT ZONE FROM THE TANK AREA. EXCAVATE TO THE DEPTH SHOWN ON THE GEOTECHNICAL REPORT. PRIOR TO PLACING FILL, IT IS RECOMMENDED THAT THE SUBGRADE BE EVALUATED BY A GEOTECHNICAL ENGINEER TO ASSESS THE SUITABILITY OF THE SOIL LEFT IN PLACE.
- BACKFILL OR FILL SHOULD BE PLACED IN THIN LIFTS AND COMPACTED PER THE GEOTECHNICAL REPORT.

FOUNDATIONS, SITE GRADING & BACKFILL

- ALLOWABLE BEARING PRESSURE FOR SPREAD FOOTINGS OVER SUBSURFACE PREPARED AS PER SPECIFICATIONS: 3,000 PSF
- THE FILL PLACED BELOW THE TANK FOUNDATION SHOULD BE APPROVED BY THE PROJECT GEOTECHNICAL ENGINEER. COMPACT FILL AFTER EACH LIFT. FILL SHALL BE PER THE GEOTECHNICAL REPORT.
- A SAND OR FINE STONE CUSHION AT LEAST 3" SHALL BE PLACED UNDER THE BOTTOM SLAB PRIOR TO POUR.

TANK IMPOSED LOADS: (REF: TANK CONNECTION TANK DESIGN CALCULATIONS)

- SHIPPING WEIGHT: 56,313 LBS
- ROOF LIVE LOAD: 17,330 LBS (25 PSF)
- FLOOR PRESSURE FROM LIQUID: 2,892 PSF
- WIND-SHEAR: 24,127 LBS
- WIND-OVERTURNING MOMENT: 544,256 FT-LBS
- SEISMIC-SHEAR: 101,695 LBS
- SEISMIC-OVERTURNING MOMENT: 2,049,265 FT-LBS
- FROST PENETRATION DEPTH: **48** INCHES

quasar energy group
7624 Riverview Road
PO Box 31023
Cleveland OH 44141
Phone: 216.986.9999

Scale: NONE

This drawing contains valuable confidential and proprietary information that belongs to quasar energy group, llc ("quasar"), and is subject to a separate Confidentiality and Nondisclosure Agreement. quasar is the author and owner of this drawing, and retains all common law, statutory and other rights and privileges with respect hereto, including copyrights. The information contained herein may not at any time be used for any unauthorized purpose, nor reproduced by or provided to any third party, without the prior written consent of quasar.

STATE OF OHIO ALAN R. JOHNSON 46333 REGISTERED PROFESSIONAL ENGINEER

AS BUILT

Rev.	ECN Number	Date
2		
1		
0	AS BUILT	__/__/__

Drawing Name:
BIOMASS EQUALIZATION TANK STRUCTURAL FOUNDATION

Project Name and Address:
0058-CAR-OH-11

RINGLER FARMS
ADS Facility
ecoFarmsystem 980

2277 County Road 156
Cardington, OH 43315-9742

Area: —
Author: —
Calculated: —
Checked: RN
Sheet Number: S-6

© 2012, Quasar Energy Group, LLC. All rights reserved.

P:\SBE Projects\0058-CAR-OH-11 - Ringler Farms\BUILDING DRAWINGS\CURRENT DRAWINGS (AS BUILT)\RINGLER FARMS STRUCTURAL.dwg
11/15/2013 3:57 PM

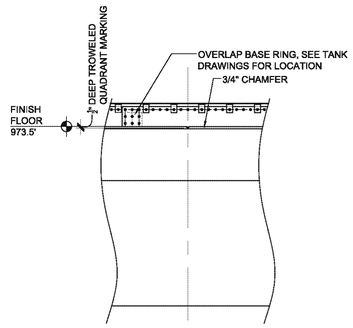

3 TROWEL MARKING DETAIL

SCALE: 1/2"=1'-0"

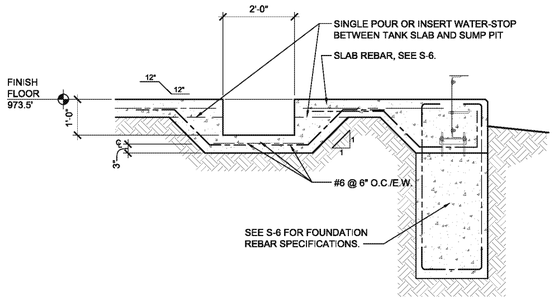

2 FOUNDATION @ SUMP PIT SECTION

SCALE: 1/2"=1'-0"

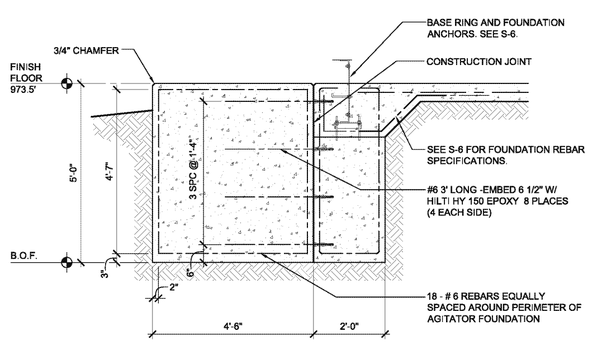

1 STAIR/AGITATOR PAD SECTION

SCALE: 1/2"=1'-0"

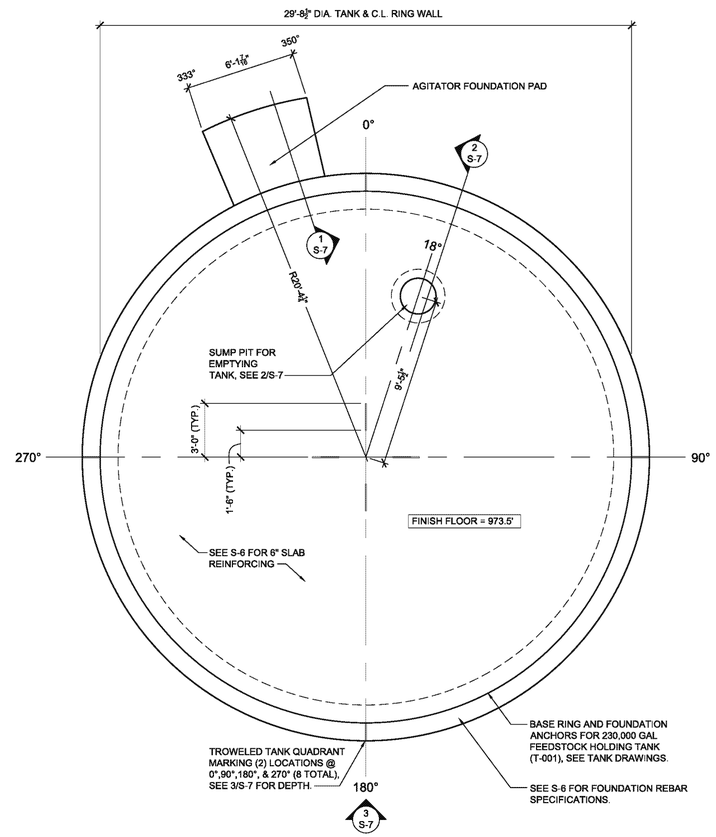

230,000 GAL BIOMASS EQUALIZATION TANK (T-001) FOUNDATION PLAN

SCALE: 1/4"=1'-0"

quasar energy group
7624 Riverview Road
PO Box 31023
Cleveland OH 44141
Phone: 216.986.9999

Scale: SEE DETAIL

This drawing contains valuable confidential and proprietary information that belongs to quasar energy group, llc ("quasar"), and is subject to a separate Confidentiality and Nondisclosure Agreement. quasar is the author and owner of this drawing, and retains all common law, statutory and other rights and privileges with respect hereto, including copyrights. The information contained herein may not at any time be used for any unauthorized purpose, nor reproduced by or provided to any third party, without the prior written consent of quasar.

STATE OF OHIO
ALAN R. JOHNSON
46333
REGISTERED
PROFESSIONAL ENGINEER

AS BUILT

Rev.	ECN Number	Date
2		
1		
0	AS BUILT	__/__/__

Drawing Name:
BIOMASS EQUALIZATION TANK STRUCTURAL FOUNDATION PLAN AND DETAILS

Project Name and Address:
0058-CAR-OH-11

RINGLER FARMS
ADS Facility
ecoFarmsystem 980

2277 County Road 156
Cardington, OH 43315-9742

Area: __
Author: RAMII
Calculated: __
Checked: RN
Sheet Number: S-7

© 2012, Quasar Energy Group, LLC. All rights reserved.

P:\SBE Projects\0058-CAR-OH-11 - Ringler Farms\BUILDING DRAWINGS\CURRENT DRAWINGS (AS BUILT)\RINGLER FARMS STRUCTURAL.dwg
11/15/2013 3:57 PM

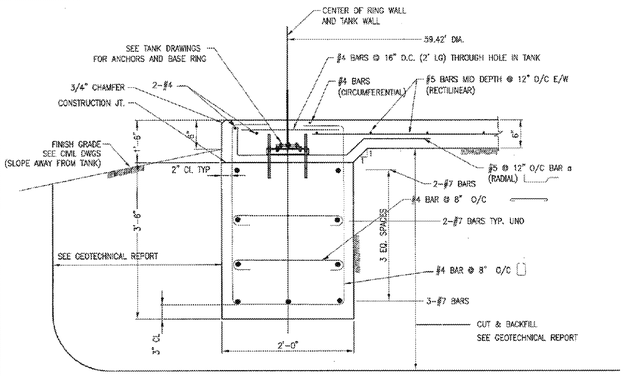

SECTION A/F1

(NOT TO SCALE)

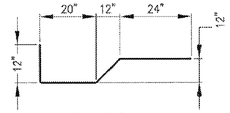

DETAIL BAR a

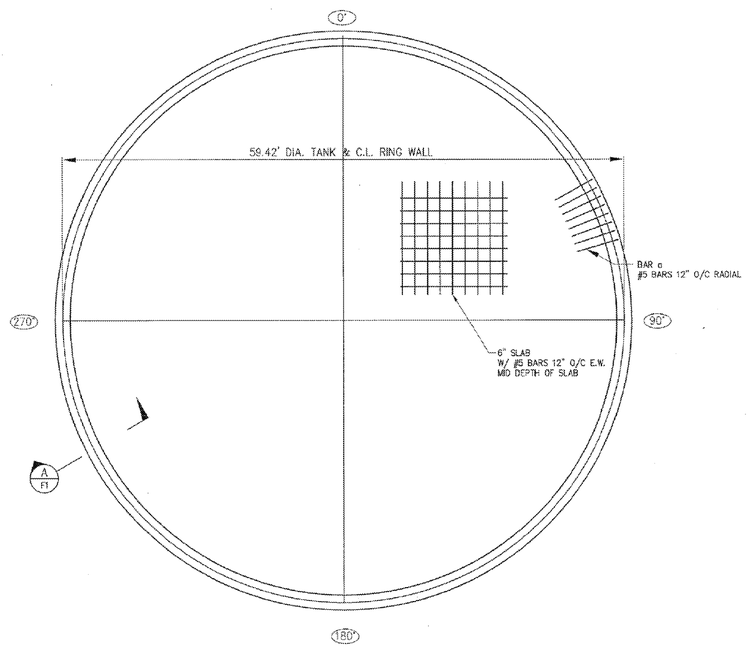

FOUNDATION PLAN VIEW

(NOT TO SCALE)

GENERAL NOTES

DESIGN CRITERIA

CODES:

- ACI 318 "BUILDING CODE REQUIREMENTS FOR REINFORCED CONCRETE"
- AWWA D-103 "FACTORY COATED BOLTED STEEL TANKS FOR WATER STORAGE"

CONCRETE 28-DAY STRENGTH

- STRUCTURAL CONCRETE-SLAB 4,000 PSI
- STRUCTURAL CONCRETE-RING WALL 4,000 PSI
- REINFORCING STEEL

ALL BARS(DEFORMED) ASTM A615, GRADE 60 60,000 PSI

WELDED WIRE FABRIC ASTM A185

CONCRETE

- ALL MATERIALS AND METHODS OF CONSTRUCTION SHALL BE IN ACCORDANCE WITH ACI 318 REQUIREMENTS.
- ALL CONCRETE SURFACES EXPOSED TO AIR, UNLESS OTHERWISE NOTED IN SPECIFICATIONS, SHALL BE TREATED WITH AN APPROPRIATE CURING COMPOUND AS SOON AS CEMENT FINISHING IS COMPLETED OR FORMS ARE REMOVED.
- ALL EXPOSED CORNERS OF CONCRETE SHALL HAVE A MINIMUM CHAMFER OF 3/4" UNLESS OTHERWISE NOTED.
- CONCRETE DELIVERED TO THE SITE SHOULD MEET TEMPERATURE REQUIREMENTS OF ASTM C94. CONCRETE SHOULD NOT BE PLACED UPON FROZEN SOILS OR SOILS WHICH CONTAIN FROZEN MATERIAL. CONCRETE SHOULD BE PROTECTED FROM FREEZING UNTIL THE NECESSARY STRENGTH IS ACHIEVED. FROST SHOULD NOT BE PERMITTED TO PENETRATE BELOW FOOTINGS BEARING ON FROST SUSCEPTIBLE SOIL SINCE SUCH FREEZING COULD HEAVE AND CRACK THE FOOTINGS.

UNLESS OTHERWISE NOTED OR DETAILED, ALL REBAR SPLICES SHALL BE IN ACCORDANCE WITH THE TABLE SHOWN BELOW:

CONCRETE REBAR SPLICES
4000 PSI

BAR SIZE	SPLICE LENGTH (IN)
#3	16
#4	19
#5	31
#6	42
#8	64
#9	80
#10	88
#11	108

TOLERANCES

- THE TOP OF THE CONCRETE FOUNDATION SHALL BE A MINIMUM OF 6" ABOVE THE ADJACENT GRADE.
- THE TOP OF THE RING WALL SHALL BE LEVEL WITHIN +/- 1/8" IN ANY 30 FEET CIRCUMFERENCE UNDER THE SHELL.
- THE LEVELNESS OF THE CIRCUMFERENCE SHALL NOT VARY BY MORE THAN +/- 1/4" FROM AN ESTABLISHED PLANE.

FINISH

- THE TOP PORTION OF THE FOUNDATION TO A DEPTH OF 6" BELOW THE PROPOSED GROUND LEVEL, SHALL BE FINISHED TO A SMOOTH FORM FINISH IN COMPLIANCE WITH ACI-301. ANY SMALL HOLES MAY BE TROWELED OVER WITH MORTAR AS SOON AS POSSIBLE AFTER THE FORMS ARE REMOVED.

ANCHOR BOLTS

- NOT REQUIRED.

BASE SETTING RING

- IT IS THE RESPONSIBILITY OF THE CONTRACTOR TO LEVEL THE SETTING RING WITHIN +/- 1/16" OF LEVEL AND CONCENTRIC WITHIN +/- 1/4". THE CONTRACTOR SHALL LOCATE THE BASE -SETTING RING IN CONFORMANCE WITH THE MANUFACTURER'S DESIGN.
- CONTRACTOR SHALL INSTALL ELASTOMER WATER STOP AT BASE-SETTING RING PER MANUFACTURER'S SPECIFICATION.

REINFORCING STEEL

REINFORCEMENT SHALL CONFORM TO ASTM A615, GRADE 60 REQUIREMENTS.

ALL ACCESSORIES SHALL BE IN CONFORMANCE WITH ACI 315 REQUIREMENTS. REINFORCING STEEL SHALL HAVE THE FOLLOWING CLEAR COVER UNLESS OTHERWISE NOTED:

- CONCRETE CAST AGAINST EARTH 3"
- FORMED SURFACES IN CONTACT WITH SOIL, SEWAGE, WATER OR EXPOSED TO WEATHER 2"
- FORMED SURFACES NOT EXPOSED TO WEATHER OR IN CONTACT WITH SOIL:
  - SLABS, WALLS, AND JOISTS 1 1/2"
  - BEAMS AND COLUMNS 1 1/2"

GEOTECHNICAL REPORT:

INTERPRETATION OF THE CONTENTS OF THE REPORT IS THE CONTRACTORS RESPONSIBILITY.

SITE PREPARATION

- REMOVE ALL TOPSOIL AND ROOT ZONE FROM THE TANK AREA. EXCAVATE TO THE DEPTH SHOWN ON THE GEOTECHNICAL REPORT. PRIOR TO PLACING FILL, IT IS RECOMMENDED THAT THE SUBGRADE BE EVALUATED BY A GEOTECHNICAL ENGINEER TO ASSESS THE SUITABILITY OF THE SOIL LEFT IN PLACE.
- BACKFILL OR FILL SHOULD BE PLACED IN THIN LIFTS AND COMPACTED PER THE GEOTECHNICAL REPORT.

FOUNDATIONS, SITE GRADING & BACKFILL

- ALLOWABLE BEARING PRESSURE FOR SPREAD FOOTINGS OVER SUBSURFACE PREPARED AS PER SPECIFICATIONS: **3000 PSI**
- THE FILL PLACED BELOW THE TANK FOUNDATION SHOULD BE APPROVED BY THE PROJECT GEOTECHNICAL ENGINEER. COMPACT FILL AFTER EACH LIFT. FILL SHALL BE PER THE GEOTECHNICAL REPORT.
- A SAND OR FINE STONE CUSHION AT LEAST 3" SHALL BE PLACED UNDER THE BOTTOM SLAB PRIOR TO POUR.

TANK IMPOSED LOADS: (REF: ROSS TANK DESIGN CALCULATIONS)

- SHIPPING WEIGHT: 90,672 LBS
- ROOF LIVE LOAD: 69,321 LBS (25 PSF)
- FLOOR PRESSURE FROM LIQUID: 2,494 PSF
- WIND-SHEAR: 42,050 LBS
- WIND-OVERTURNING MOMENT: 828,633 FT-LBS
- SEISMIC-SHEAR: 285,545 LBS
- SEISMIC-OVERTURNING MOMENT: 4,433,145 FT-LBS
- FROST PENETRATION DEPTH: 48 INCHES

quasar energy group

quasar energy group
7624 Riverview Road
PO Box 31023
Cleveland OH 44141
Phone: 216.986.9999

N

Scale: NONE

This drawing contains valuable confidential and proprietary information that belongs to quasar energy group, llc ("quasar"), and is subject to a separate Confidentiality and Nondisclosure Agreement. quasar is the author and owner of this drawing, and retains all common law, statutory and other rights and privileges with respect hereto, including copyrights. The information contained herein may not at any time be used for any unauthorized purpose, nor reproduced by or provided to any third party, without the prior written consent of quasar.

STATE OF OHIO
ALAN R. JOHNSON
46333
REGISTERED
PROFESSIONAL ENGINEER

AS BUILT

Rev.	ECN Number	Date
2		
1		
0	AS BUILT	__/__/__

Drawing Name:

DIGESTER TANK STRUCTURAL FOUNDATION

Project Name and Address:

0058-CAR-OH-11

RINGLER FARMS
ADS Facility
ecoFarmsystem 980

2277 County Road 156
Cardington, OH 43315-9742

Area: _

Author: _

Calculated: _

Checked: RN

Sheet Number: S-8

© 2012, Quasar Energy Group, LLC. All rights reserved.

P:\SBE Projects\0058-CAR-OH-11 - Ringler Farms\BUILDING DRAWINGS\CURRENT DRAWINGS (AS BUILT)\RINGLER FARMS STRUCTURAL.dwg
11/15/2013 3:58 PM

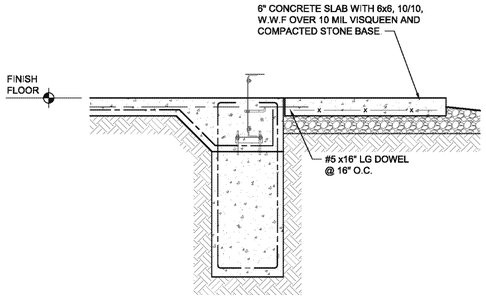

5 STAIR LANDING DETAIL
SCALE: 1/2"=1'-0"

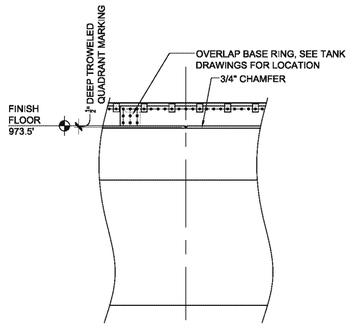

4 TROWEL MARKING DETAIL
SCALE: 1/2"=1'-0"

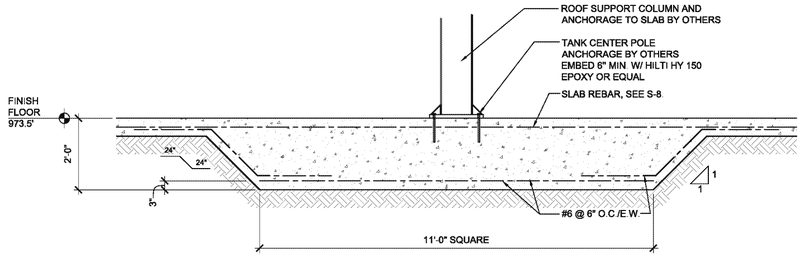

3 COLUMN PAD SECTION
SCALE: 1/2"=1'-0"

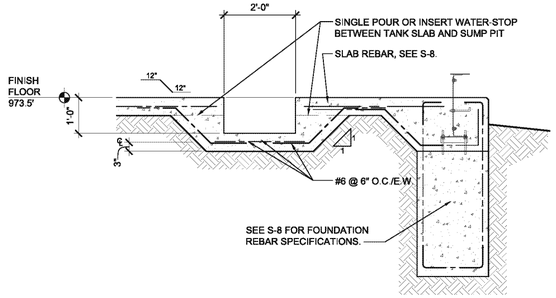

2 FOUNDATION @ SUMP PIT SECTION
SCALE: 1/2"=1'-0"

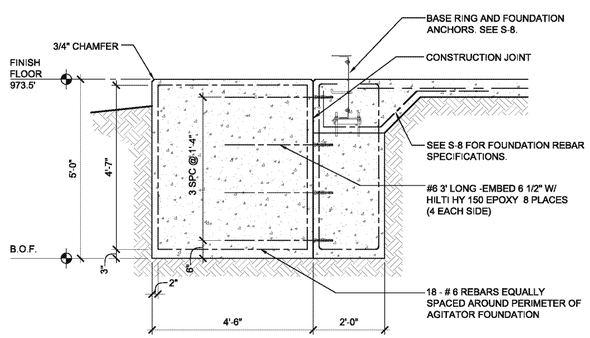

1 STAIR/AGITATOR PAD SECTION
SCALE: 1/2"=1'-0"

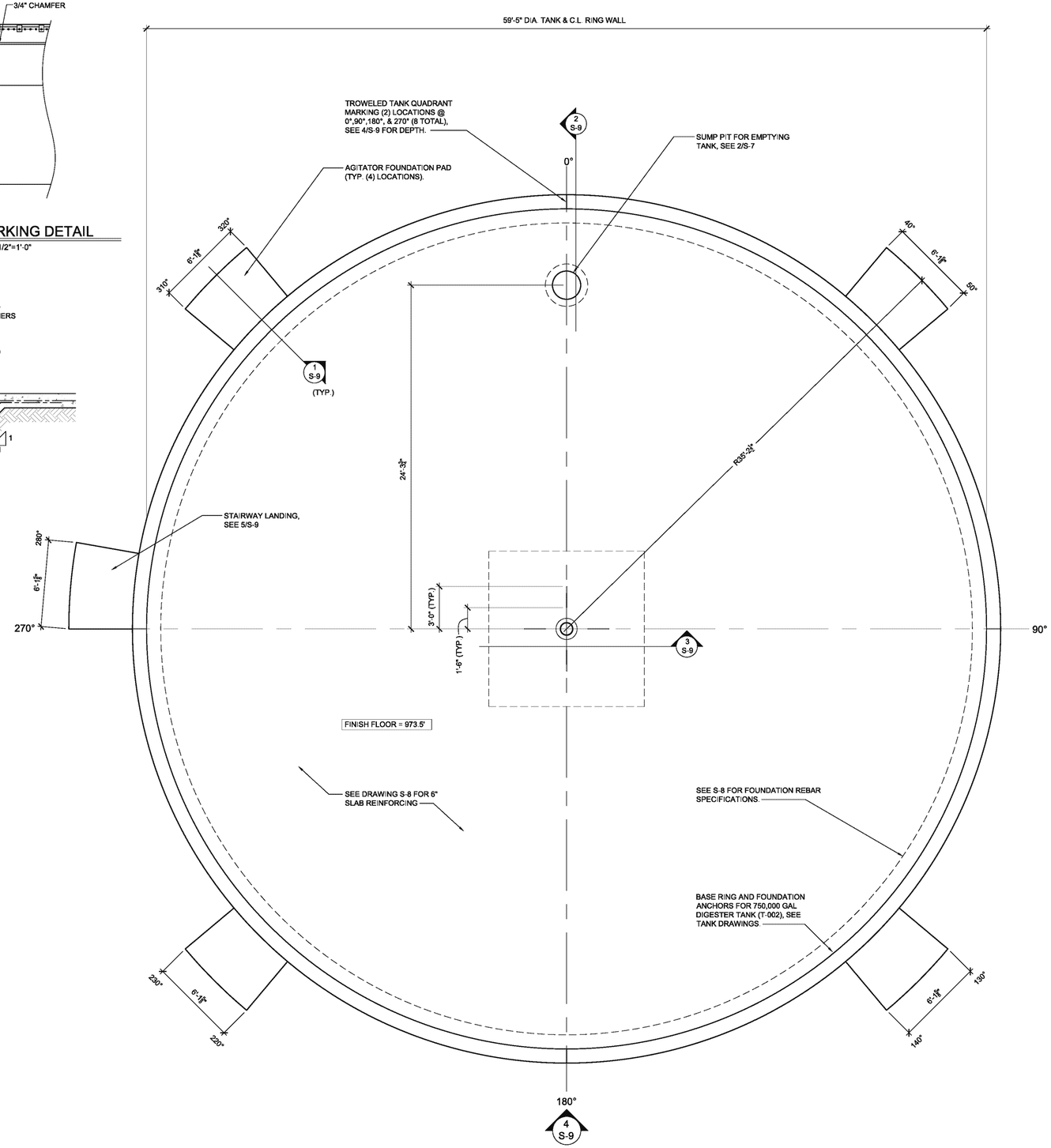

750,000 GAL. DIGESTER (T-002) FOUNDATION PLAN
SCALE: 1/4"=1'-0"

quasar energy group
7624 Riverview Road
PO Box 31023
Cleveland OH 44141
Phone: 216.986.9999

Scale: SEE DETAIL

This drawing contains valuable confidential and proprietary information that belongs to quasar energy group, llc ("quasar"), and is subject to a separate Confidentiality and Nondisclosure Agreement. quasar is the author and owner of this drawing, and retains all common law, statutory and other rights and privileges with respect hereto, including copyrights. The information contained herein may not at any time be used for any unauthorized purpose, nor reproduced by or provided to any third party, without the prior written consent of quasar.

STATE OF OHIO
ALAN R. JOHNSON
46333
REGISTERED
PROFESSIONAL ENGINEER

AS BUILT

Rev.	ECN Number	Date
2		
1		
0	AS BUILT	__/__/__

Drawing Name:
DIGESTER TANK STRUCTURAL FOUNDATION PLAN AND DETAILS

Project Name and Address:
0058-CAR-OH-11

RINGLER FARMS
ADS Facility
ecoFarmsystem 980

2277 County Road 156
Cardington, OH 43315-9742

Area: _
Author: RAMII
Calculated: _
Checked: RN
Sheet Number: S-9

© 2012, Quasar Energy Group, LLC. All rights reserved.

P:\SBE Projects\0058-CAR-OH-11 - Ringler Farms\BUILDING DRAWINGS\CURRENT DRAWINGS (AS BUILT)\RINGLER FARMS STRUCTURAL.dwg
11/15/2013 3:36 PM

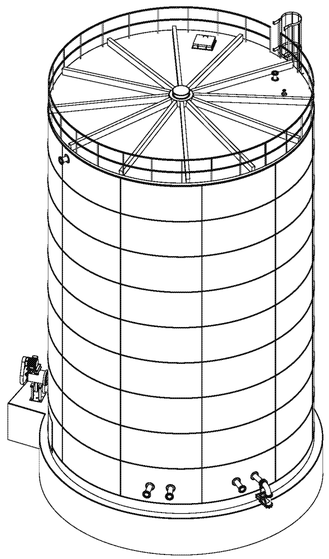

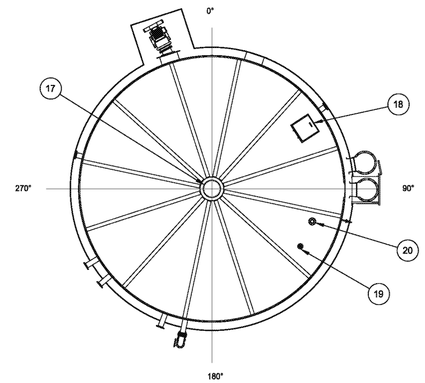

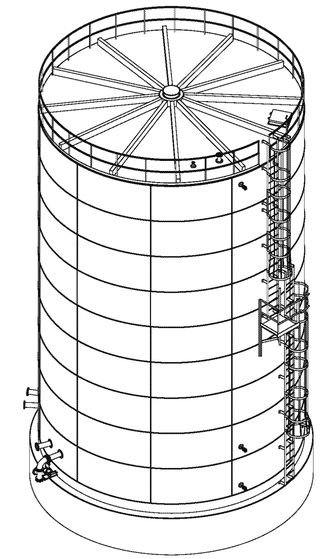

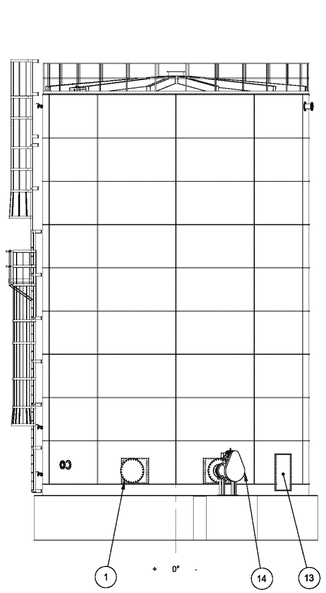

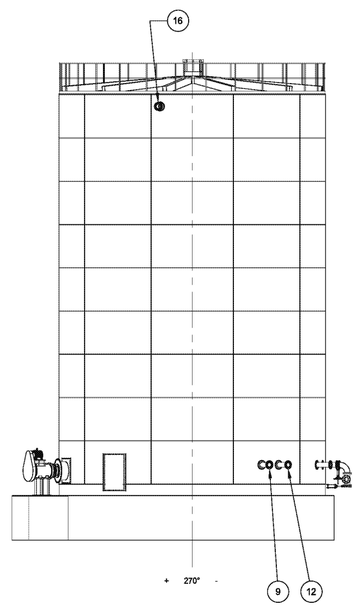

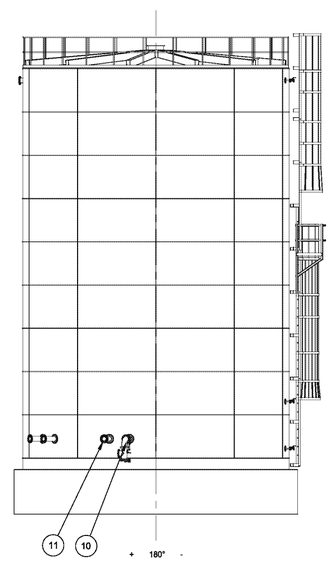

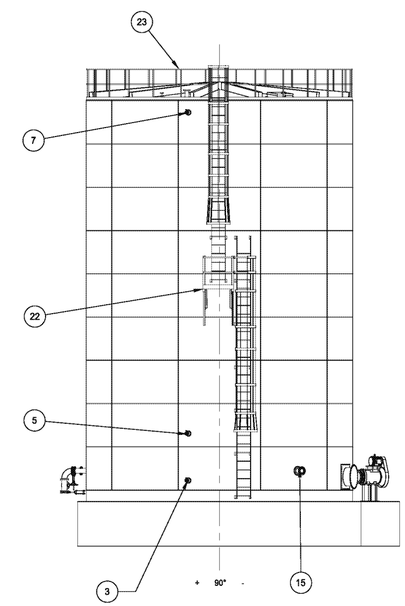

ACCESSORIES							
ITEM	SERVICE	REF. DEG	PORT SIZE	RADIUS	ELEVATION FROM TOS	PIPE/INSTRUMENT CONNECTION	DOUBLE FLANGE ?
1	SHELL MANWAY W/HINGE	18°	24"	-	2'-9"	-	-
2	-	-	-	-	-	-	-
3	FLANGE - INSTRUMENT	103.5°	1"	-	2'4"	PRESSURE SENSOR	NO
5	FULL COUPLING - INSTRUMENT	103.5°	1"	-	7'-7"	TEMP. SENSOR	NO
7	FLANGE - INSTRUMENT	103.5°	1"	-	43'-5 11/16"	PRESSURE SENSOR	NO
9	FLANGE NOZZLE -SLUDGE	238.5	6"	-	3'-5"	TANK INLET - 6" PIPE	YES
10	FLANGE NOZZLE -SLUDGE	191.5°	6"	-	3'-5"	TANK OUTLET - 6" PIPE	YES
11	FLANGE NOZZLE -SLUDGE	200.5°	6"	-	3'-5"	TANK OUTLET - 6" PIPE	YES
12	FLANGE NOZZLE -SLUDGE	229.5°	6"	-	3'-5"	TANK INLET - 6" PIPE	YES
13	FLUSH CLEANOUT	306°	30" x 46"	-	STD	-	-
14	AGITATOR	342°	24"	-	2'-9"	-	-
15	FLANGE NOZZLE - SLUDGE	54°	6"	-	3'-5"	SPARE	YES
16	FLANGE NOZZLE - GAS	284°	6"		43'-5 11/16"	TANK TO TANK GAS LINE - 6" PIPE	YES

NOTE:

DRAWING BASED ON BOSS TANK WITH 29.71' DIAMETER AND 44.85' HEIGHT. THIS TANK HAS A 232,589 GAL OVERALL CAPACITY AND A WORKING VOLUME OF 217,031 GAL WITH 36" OF FREEBOARD

ACCESSORIES							
ITEM	SERVICE	REF. DEG.	PORT SIZE	RADIUS	ELEVATION FROM TOS	PIPE/INSTRUMENT CONNECTION	DOUBLE FLANGE ?
17	CTR. FLANGE	CTR	20"	CTR	-	TANK OVER-UNDER PRESSURE VALVE (20" KNAPPCO PRESSURE/VACUUM HATCH)	NO
18	ø24" SNAPLOCK MANWAY	57°	24"	12' - 5 1/2"	-	-	-
19	FLANGE - INSTRUMENT	123°	1"	11' - 9 1/2"	-	LEVEL SENSOR	NO
20	FLANGE - INSTRUMENT	108°	4"	11' - 9 1/2"	-	SPARE	NO
21	STANDARD LADDER LANDING	90°	STD	-	-	IF NECESSARY FOR LADDER ACCESS TO ROOF	-
22	STANDARD TANK LADDER	90°	STD	-	-	-	-
23	TANK ROOF SAFTEY RAIL	-	STD	-	-	-	-

230,000 GAL. BIOMASS EQUALIZATION TANK (T-001) ACCESSORY LOCATIONS

SCALE: 1/8"=1'-0"

quasar energy group
7624 Riverview Road
PO Box 31023
Cleveland OH 44141
Phone: 216.986.9999

Scale: SEE DETAIL

This drawing contains valuable confidential and proprietary information that belongs to quasar energy group, llc ("quasar"), and is subject to a separate Confidentiality and Nondisclosure Agreement. quasar is the author and owner of this drawing, and retains all common law, statutory and other rights and privileges with respect hereto, including copyrights. The information contained herein may not at any time be used for any unauthorized purpose, nor reproduced by or provided to any third party, without the prior written consent of quasar.

STATE OF OHIO
ALAN R. JOHNSON
46333
REGISTERED
PROFESSIONAL ENGINEER

AS BUILT

Rev.	ECN Number	Date
2		
1		
0	AS BUILT	__/__/__

Drawing Name
230K GAL. BIOMASS EQUALIZATION TANK ACCESSORY LOCATIONS

Project Name and Address:
0058-CAR-OH-11

RINGLER FARMS
ADS Facility
ecoFarmsystem 980

2277 County Road 156
Cardington, OH 43315-9742

Area: _
Author: BR
Calculated: _
Checked: RN
Sheet Number: S-10

© 2012, Quasar Energy Group, LLC. All rights reserved.

P:\SBE Projects\0058-CAR-OH-11 - Ringler Farms\BUILDING DRAWINGS\CURRENT DRAWINGS (AS BUILT)\RINGLER FARMS STRUCTURAL.dwg
11/15/2013 3:56 PM

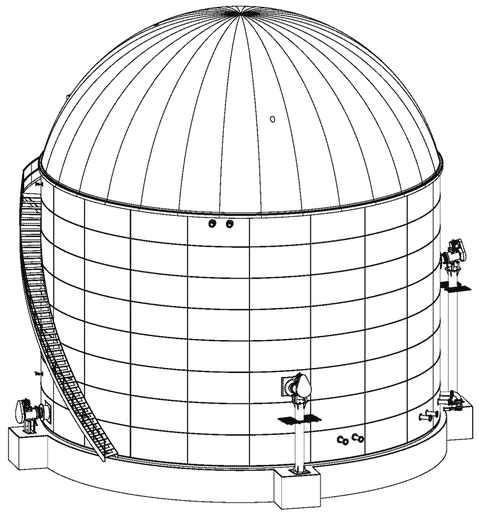

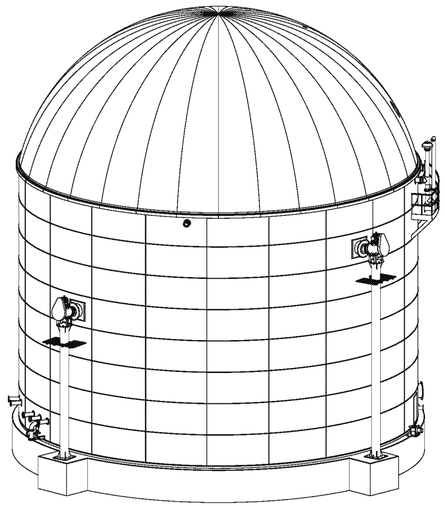

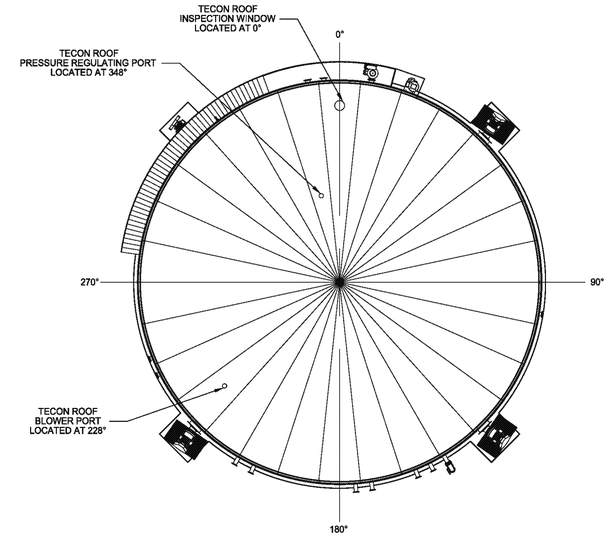

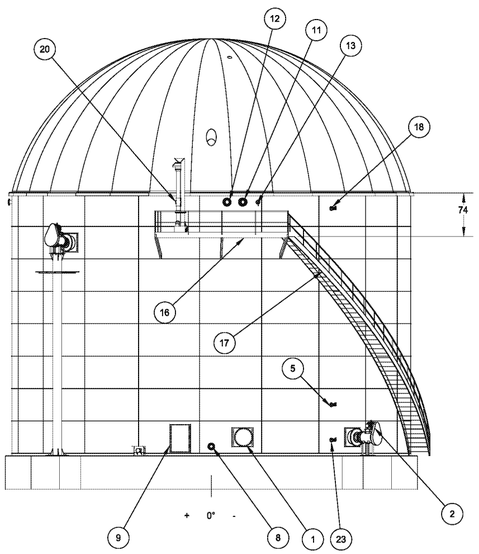

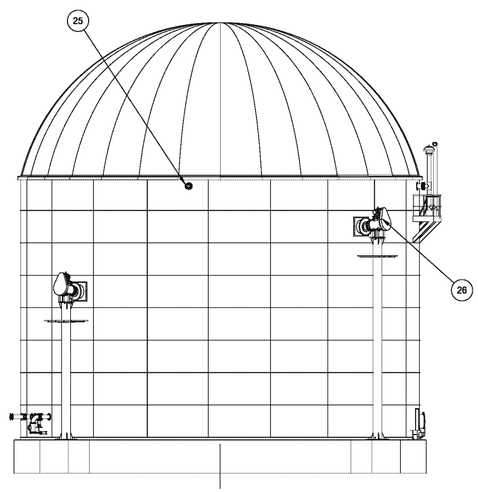

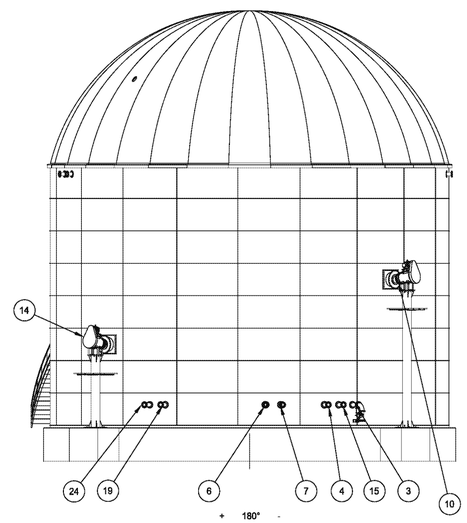

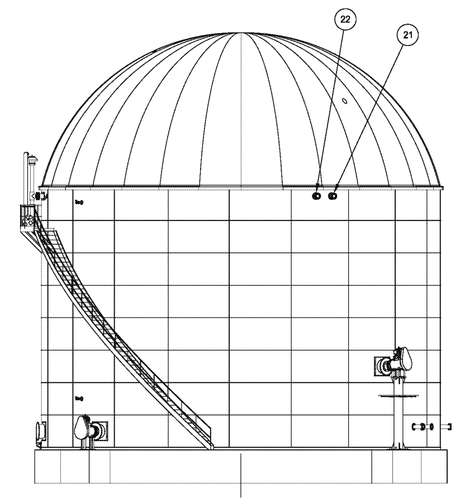

ACCESSORIES							
ITEM	SERVICE	REF. DEG	PORT SIZE	RADIUS	ELEVATION FROM TOS	PIPE/INSTRUMENT CONNECTION	DOUBLE FLANGE ?
1	SHELL MANWAY W/HINGE	351°	24"	-	2'-9"	-	-
2	AGITATOR	315°	24"	-	2'-9"	-	-
3	FLANGE NOZZLE - SLUDGE	149°	6"	-	3'-5"	TANK OUTLET - 6" PIPE	YES
4	FLANGE NOZZLE - SLUDGE	158°	6"	-	3'-5"	TANK OUTLET - 6" PIPE	YES
5	FULL COUPLING - INSTRUMENT	323°	1"	-	7'-7"	TEMP. SENSOR	NO
6	FLANGE NOZZLE -SLUDGE	175.5°	6"	-	3'-5"	TANK INLET - 6" PIPE	YES
7	FLANGE NOZZLE -SLUDGE	171°	6"	-	3'-5"	TANK INLET - 6" PIPE	YES
8	FLANGE NOZZLE - SLUDGE	0°	6"	-	1'-4 1/2"	SPARE FOR TANK DRAINING	YES
9	FLUSH CLEANOUT	9°	30" x 46"	-	STD	-	-
10	AGITATOR	135°	24"	-	22'-1"	-	-
11	FLANGE - VIEWING PORT	351°	8"	-	37'-9 1/2"	-	NO
12	FLANGE - VIEWING PORT	358.5°	8"	-	37'-9 1/2"	-	NO

ACCESSORIES							
ITEM	SERVICE	REF. DEG.	PORT SIZE	RADIUS	ELEVATION FROM TOS	PIPE/INSTRUMENT CONNECTION	DOUBLE FLANGE?
13	NPT NIPPLE - ANTI-FOAM	346.5°	1"	-	37'-9 1/2"	ANTI-FOAM IN - 1" PIPE	-
14	AGITATOR	225°	24"	-	12'-5"	-	-
15	FLANGE NOZZLE - SLUDGE	153.5°	6"	-	3'-5"	TANK OUTLET - 6" PIPE	YES
16	STAIR LANDING	0°	22'-7"	-	6'-2" T.O.T	-	-
17	STAIRWAY	-	STD	-	-	-	-
18	FLANGE - INSTRUMENT	323°	1"	-	36'-10"	LEVEL SENSOR	NO
19	FLANGE NOZZLE - SLUDGE	205°	6"	-	3'-5"	TANK INLET - 6" PIPE	YES
20	FLANGE - INSTRUMENT	9°	8"	-	37'-9 1/2"	OVER-UNDER PRESS. VALVE PORT	YES
21	FLANGE NOZZLE - GAS	243°	6"	-	37'-9 1/2"	GAS LINE TO CHP - 6" PIPE	YES
22	FLANGE NOZZLE - GAS	248°	6"	-	37'-9 1/2"	GAS LINE TO FLARE - 6" PIPE	YES
23	FLANGE - INSTRUMENT	323°	1"	-	2'-4"	PRESSURE SENSOR	NO
24	FLANGE NOZZLE - SLUDGE	210°	6"	-	3'-5"	TANK OUTLET - 6" PIPE	YES
25	FLANGE NOZZLE - GAS	99°	6"	-	37'-9 1/2"	TANK TO TANK GAS LINE	YES
26	AGITATOR	45°	24"	-	31'-9"	-	-

NOTE:

DRAWING BASED ON BOSS TANK WITH 59.42' DIAMETER AND 39.17' HEIGHT. THIS TANK HAS A 812,532 GAL OVERALL CAPACITY AND A WORKING VOLUME OF 750,300 GAL WITH 36" OF FREEBOARD

750,000 GAL. DIGESTER (T-002) ACCESSORY LOCATIONS

SCALE: 3/32"=1'-0"

quasar energy group

quasar energy group
7624 Riverview Road
PO Box 31023
Cleveland OH 44141
Phone: 216.986.9999

Scale: SEE DETAIL

This drawing contains valuable confidential and proprietary information that belongs to quasar energy group, llc ("quasar"), and is subject to a separate Confidentiality and Nondisclosure Agreement. quasar is the author and owner of this drawing, and retains all common law, statutory and other rights and privileges with respect hereto, including copyrights. The information contained herein may not at any time be used for any unauthorized purpose, nor reproduced by or provided to any third party, without the prior written consent of quasar.

STATE OF OHIO
ALAN R. JOHNSON
46333
REGISTERED
PROFESSIONAL ENGINEER

AS BUILT

Rev.	ECN Number	Date
2		
1		
0	AS BUILT	__/__/__

Drawing Name:
750K GAL. DIGESTER TANK ACCESSORY LOCATIONS

Project Name and Address:
0058-CAR-OH-11

RINGLER FARMS
ADS Facility
ecoFarmsystem 980

2277 County Road 156
Cardington, OH 43315-9742

Area: __

Author: BR

Calculated: __

Checked: RN

Sheet Number: S-11

© 2012, Quasar Energy Group, LLC. All rights reserved.

P:\SBE Projects\0058-CAR-OH-11 - Ringler Farms\BUILDING DRAWINGS\CURRENT DRAWINGS (AS BUILT)\RINGLER FARMS STRUCTURAL.dwg
11/15/2013 3:54 PM

ACCESSORY ORIENTATION CHART						
CUSTOMER ITEM	ITEM	SERVICE	SIZE	RADIUS	REF DEGREE	ELEV. FROM BTM. OF TANK STEEL TO CTR OF ACCESSORY UNLESS NOTED OTHERWISE
1	20/21	SHELL MANWAY W/HINGE	24"	SHELL	18	2'-9"
3	35	INST. NOZL.-PRES. SENSOR	1"	SHELL	175.5	2'-4"
5	36	FULL CPLG.-TEMP. SENSOR	1"	SHELL	175.5	7'-7"
7	37	INST. NOZL.-PRES. SENSOR	1"	SHELL	175.5	43'-5 11/16"
8	38A/39A	DBL. NOZL.-SLUDGE INLET	6"	SHELL	211.5	2'-9"
9	38B/39B	DBL. NOZL.-SLUDGE INLET	6"	SHELL	238.5	2'-9"
10	38C/39C	DBL. NOZL.-SLUDGE OUTLET	6"	SHELL	220.5	2'-9"
11	38D/39D	DBL. NOZL.-SLUDGE OUTLET	6"	SHELL	229.5	2'-9"
12	38F/39F	DBL. NOZL.-SLUDGE INLET	6"	SHELL	247.5	2'-9"
13	33	FLUSH CLEANOUT	30" x 46"	SHELL	342	SEE DETAIL
14	23/24	AGITATOR	24"	SHELL	270	2'-9"
15	38H/39H	DBL. NOZL.-SLUDGE SPARE	6"	SHELL	54	2'-9"
16	42/43	DBL. NOZL.-GAS LINE	6"	SHELL	284	43'-5 11/16"
22	-	EXT. CAGED LADDER	STD	SHELL	162.38	---

ITEM	D/S	PART NO.	QTY	DESCRIPTION	EST. WT.	PAINT
1	B	2340001018	1	BTM PANEL 3/16"PL 2RV. GR.50 W/MNWY. PCHG.	337	I/E
2	B	2340001019	1	BTM PANEL 3/16"PL 2RV. GR.50 W/CLEANOUT PCHG.	297	I/E
3	B	2340001020	1	BTM PANEL 3/16"PL 2RV GR.50 W/MNWY & NOZZLE PCHG	337	I/E
4	B	2340001604	1	MID PANEL 3/16"PL 2RV. GR.50 W/NOZZLE PCHG.	372	I/E
5	B	2340001605	1	MID PANEL 3/16"PL 2RV. GR.50 W/NOZZLE PCHG.	372	I/E
6	B	2340001606	1	MID PANEL 3/16"PL 2RV GR.50 W/NOZZLE PCHG.	372	I/E
7	B	2340001607	1	MID PANEL 3/16"PL 2RV GR.50 W/NOZZLE PCHG.	372	I/E
8						
9	B	BP3258221310	43	MID PANEL 3/16"PL 2RV GR.50 PLAIN	372	I/E
10						
11	B	BP3058121310	10	MID PANEL 3/16"PL 1RV. GR.36 PLAIN	364	I/E
12						
13	B	BP2158111310	20	MID PANEL 10GA. 1RV. GR.40 PLAIN	261	I/E
14	B	BP2111111310	10	MID PANEL 10GA. 1RV. GR.40 PLAIN	60	I/E
15						
16	B	2340001016	1	TOP PANEL 10GA. 1RV. A304 SS W/NOZZLE PCHG.	261	N
17	B	2340001017	1	TOP PANEL 10GA. 1RV. A304 SS W/NOZZLE PCHG.	261	N
18	B	475003115	8	TOP PANEL 10GA. 1RV. A304 SS W/DECK PCHG.	261	N
19						
20	B	475003124	1	BOLT-ON SHELL MANWAY 24" DIA 2RV	180	I/E
21	B	MWC62524	1	MANWAY COVER 5/8"PL 24" DIA	156	I/E
22	B	MWGSKTN2428	2	MANWAY GASKET 24" NITRILE		N
23	B	475003122	1	MIXER MOUNT NOZL. 1/4" REPAD 1/2" BOLT FLNG.	178	I/E
24	B	475003123	1	MIXER MOUNT COVER 5/8"PL	129	I/E
25	-	BLTHG05008500	1	1/2" X 8 1/2" HX HD BOLT HDG GR.5		N
26	-	WSHFG0500	3	1/2" FLAT WASHER HDG		N
27	-	NUTHG0500	3	1/2" HEX NUT HDG		N
28	-	BLTHG07502750	11	3/4" X 2 3/4" HX HD BOLT HDG A325		N
29	-	BLTHG07502500	59	3/4" X 2 1/2" HX HD BOLT HDG A325		N
30	-	WSHFG0750	70	3/4" FLAT WASHER HDG F436		N
31	-	NUTHG0750	70	3/4" HEX NUT HDG A325		N
32						
33	B	2163001009	1	3/16"PL FLUSH CLEANOUT COVER	108	I/E
34						
35	B	BNR1500107	1	1" 150# RFSO FLANGE NOZZLE 7" PROJ.	6	I/E
36	B	CPFC1000	1	BOLT ON 1" FULL COUPLING 3000# S.S.	4	I/E
37	B	BNR1500107SS	1	1" 150# RFSO FLANGE NOZZLE 7" PROJ. S.S.	6	N
38	B	BNR1500610	6	6" 150# RFSO FLANGE NOZZLE 10" PROJ.	39	I/E
39	B	BNR15006	6	6" 150# RFSO FLANGE NOZZLE	33	I
40	B	NGDF0600	1	GASKET 6" 150# PUNCHING NITRILE		N
41	B	BFC1500600	1	BLIND FLANGE 6" 150# PUNCHING 1/2"PL	3	I/E
42	B	BNR1500610SS	1	6" 150# RFSO FLANGE NOZZLE 10" PROJ. S.S.	39	N
43	B	BNR15006SS	1	6" 150# RFSO FLANGE NOZZLE S.S.	33	N
44						
45	A	NMPLT2493001	1	NAMEPLATE		N

(ROLL ALL PANELS TO 29'-8 1/2" DIA.)
ASSY. WT.= 31,587#

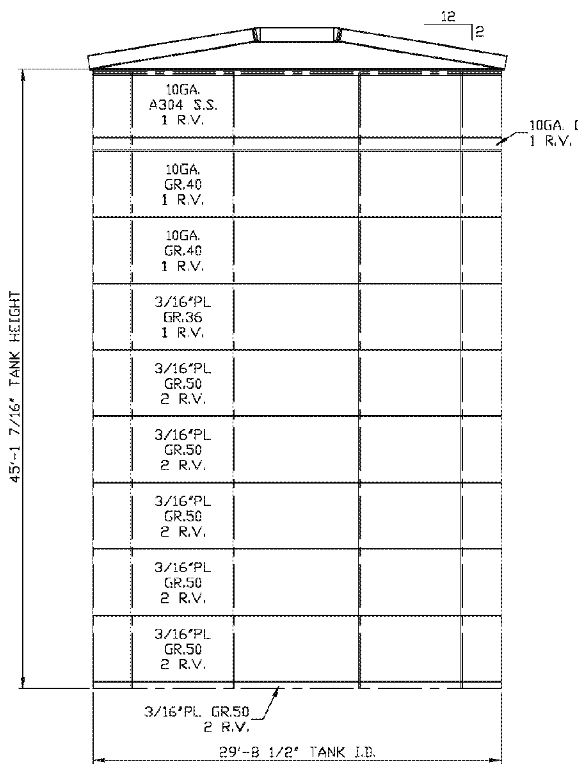

ELEVATION VIEW

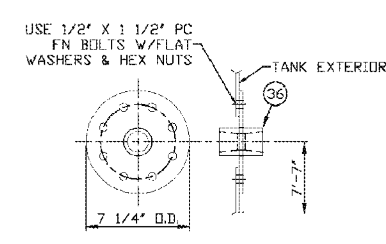

FULL COUPLING DETAIL
CUST. ITEM: 5

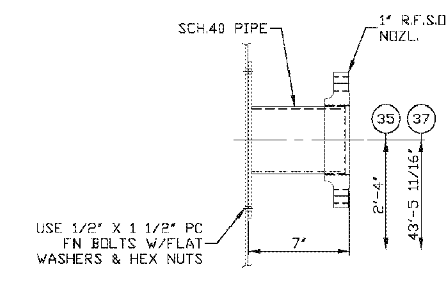

150# R.F.S.O. INSTRUMENT NOZZLE DETAIL
CUST. ITEMS: 3 & 7

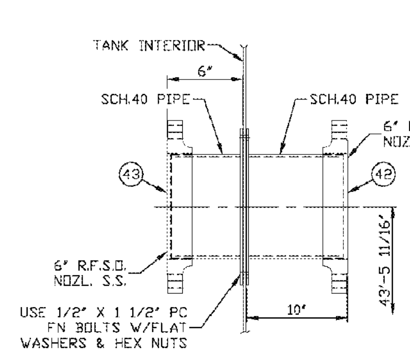

150# R.F.S.O. DOUBLE NOZZLE DETAIL
CUST. ITEM: 16

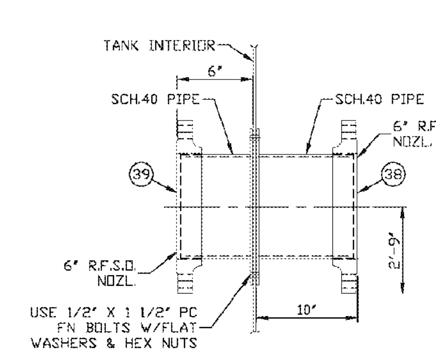

150# R.F.S.O. DOUBLE NOZZLE DETAIL
CUST. ITEMS: 8, 9, 10, 11, & 12

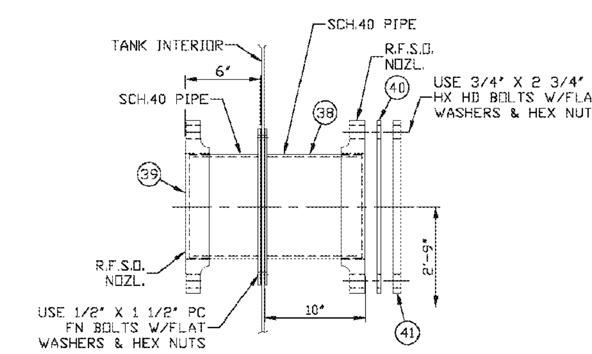

150# R.F.S.O. SLUDGE SPARE DETAIL
CUST. ITEM: 15

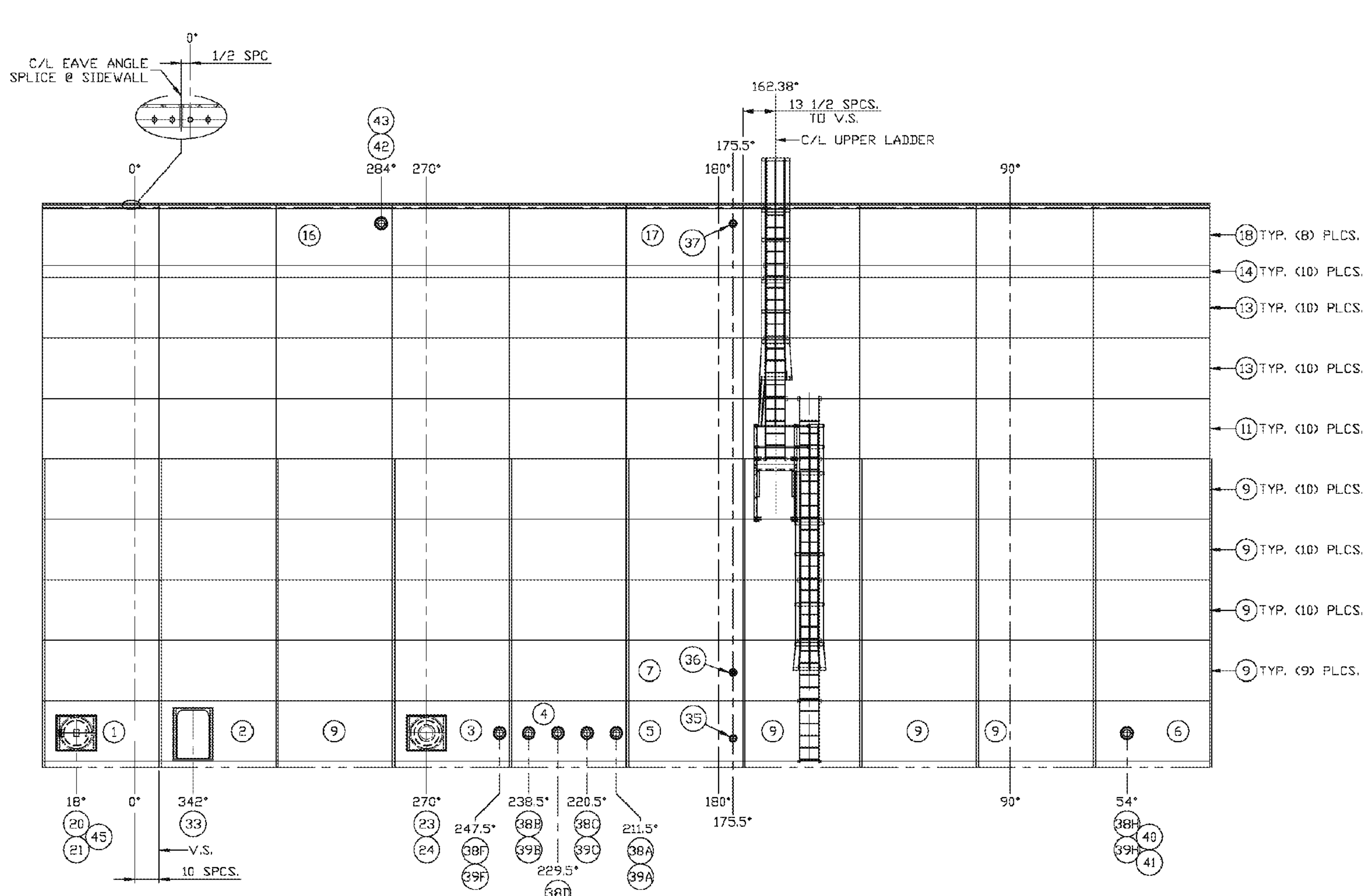

FLAT LAYOUT
EXTERIOR VIEW

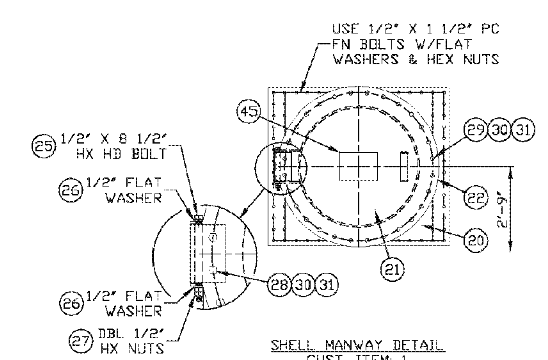

SHELL MANWAY DETAIL
CUST. ITEM: 1

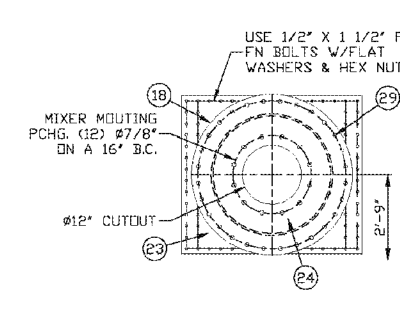

AGITATOR MOUNT DETAIL
CUST. ITEM: 14

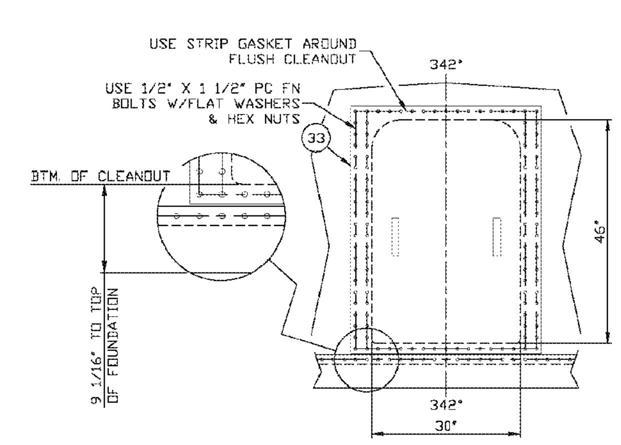

FLUSH CLEAN-OUT DETAIL
CUST. ITEM: 13

SAFETY/OPERATIONAL NOTES:
1) TANK IS DESIGNED FOR LOADS FROM A LIQUID PRODUCT.
2) DO NOT FIELD CUT ANY OPENINGS IN TANK WITHOUT WRITTEN CONSENT FROM TANK CONNECTION.
3) TANK FOUNDATIONS SHALL BE LEVEL WITHIN 1/8" IN ANY 30 FT. CIRCUMFERENCE UNDER THE TANK SHELL. LEVELNESS ON CIRCUMFERENCE SHALL NOT VARY MORE THAN 1/4" FROM AN ESTABLISHED PLANE. TANK PADDING TO BE USED ON CONCRETE FOUNDATIONS. VAPOR BARRIER TO BE USED ON GRAVEL AND SAND FOUNDATIONS.
4) IF ANCHOR BOLTS ARE NOT PROVIDED BY TANK CONNECTION, ANCHORING FOR ALL WIND AND SEISMIC LOADS IS THE RESPONSIBILITY OF CUSTOMER.
5) APPLICATION OF LOADS TO TANK FROM EQUIPMENT, OTHER THAN NOTED ON THIS DRAWING, MUST BE APPROVED IN WRITING BY TANK CONNECTION PRIOR TO INSTALLATION.
6) TANK IS DESIGNED FOR ATMOSPHERIC (EQUALIZED) PRESSURE INTERNALLY AND EXTERNALLY. CUSTOMER TO ASSURE PROPER VENTILATION IS PROVIDED AND MAINTAINED.

ERECTION NOTES:
1) USE ONLY HARDWARE FURNISHED WITH TANK. ALL BOLTS MUST MEET SPECIAL HIGH STRENGTH REQUIREMENTS.
2) INSTALL TANK SEGMENTS IN A COUNTER-CLOCKWISE DIRECTION WHEN WORKING FROM TOP DOWN. INSTALL TANK SEGMENTS IN A CLOCKWISE DIRECTION WHEN WORKING FROM BOTTOM UP.
3) TANK SHALL BE ADEQUATELY BRACED DURING ERECTION TO PREVENT WIND DAMAGE.
4) WHEN ENCAPSULATED BOLTS ARE REQUIRED, THEY WILL BE UTILIZED IN THE STORED LIQUID ZONE ONLY.
5) ERECTION CONTRACTOR TO COORDINATE TOUCH-UP COATING PROCEDURES. CONTRACTOR TO FOLLOW MANUFACTURER'S LABEL INSTRUCTIONS.
6) ADEQUATE BLOCKING SHOULD BE USED TO PROTECT BOLTED PANELS IF REMOVED FROM SHIPPING PALLETS PRIOR TO FIELD INSTALLATION.

DESIGN CRITERIA:
1) TANK DESIGN PER AWWA D103-09
2) SEISMIC DESIGN PER AWWA D103-09, Ss=25.0%, S1=8.0%, I=1.25, SITE CLASS=D, GROUP=2
3) WIND DESIGN PER AWWA D103-09, 90 MPH, I=1.15 WIND PRESSURE=18.0psf.
4) DECK IS DESIGNED FOR 25 PSF LIVE LOAD.
5) TANK IS DESIGNED FOR STORAGE OF WASTEWATER WITH A SPECIFIC GRAVITY OF 1.10
6) ACCEPTABLE LIQUID PH RANGE: BETWEEN 4-9
7) OPERATING TEMPERATURE: -22°F TO 200°F
8) DESIGN PRESSURE: +6.0/-0.5 oz./in²
9) TANK CAPACITY: 218,460 GALLONS (BASED ON 3'-0" FREEBOARD)
10) HARDWARE: SIDEWALL & DECK SEGMENTS: POLY CAP FN BOLTS W/JS500 FLAT WASHERS & JS500 NUTS DECK STRUCTURE: SQUARE HD BOLTS W/JS500 FLAT WASHERS & JS500 NUTS
11) ESTIMATED WEIGHT: 58,200 LBS. EMPTY (5% ADDED)
12) TANK CONSTRUCTED OF ASTM CERTIFIED SHEET, PLATE AND STRUCTURAL MEMBERS.
13) GASKET MATERIAL: NITRILE

TANK COATINGS:
INTERIOR PRIMER: LIQ FUSION 7000 FBE™ 6 MILS MINIMUM DFT, RANGE OF 6 MILS MIN / 9 MILS MAX
EXTERIOR PRIMER: EXT FUSION 5000 FBE™ 3 MILS MINIMUM DFT, RANGE OF 3 MILS MIN / 5 MILS MAX
EXTERIOR TOPCOAT: EXT FUSION SDP™ 3 MILS MINIMUM DFT, RANGE OF 3 MILS MIN / 5 MILS MAX
EXTERIOR COLOR: WHITE (RAL 9016)
ALL COATINGS ARE APPLIED OVER AN SP10 SURFACE BLAST AND FUSED TO SUBSTRATE SURFACE.
SEALANT: WHITE (SIKA FLEX TS+)

REFERENCE DRAWINGS:

DECK LAYOUT	DECK2340001
EXTERIOR LADDER ASSEMBLY	ELL2163001
HARDWARE SHEET	HRDW2340001
PERIMETER GUARDRAIL ASSEMBLY	GRDF2340001
BASE SETTING RING ASSEMBLY	BSR0292340001

CERTIFIED
APPROVED FOR CONSTRUCTION

TANK CONNECTION
AFFILIATE GROUP
3609 NORTH 16TH ST . PARSONS, KANSAS 67357
620.423.3010 . FAX: 620.423.3999

BY ACCEPTING POSSESSION OF THIS DOCUMENT, RECIPIENT AGREES THAT ITS CONTENTS ARE CONFIDENTIAL, PROPRIETARY TRADE SECRETS OF THE TANK CONNECTION. NO PORTION OF THIS DOCUMENT MAY BE REPRODUCED, DISTRIBUTED, OR USED IN ANY MANNER WITHOUT WRITTEN PERMISSION FROM THE TANK CONNECTION.

B							
A	CHANGE LOCATION			07/06/2012	BW		JBB
REV	REVISION			DATE	BY		APP
CUSTOMER	QUASAR ENERGY GROUP						
PROJECT NAME AND LOCATION	QUASAR ENERGY GROUP RINGLER FARMS - CARDINGTON, OHIO						
DWG TITLE	MAIN ASSEMBLY DETAILS- 230K TANK						
DWN BY	JK	DATE:	01/12/12	JOB NO	02493	DWG NO	BCL0290452493001
CHK BY	JA	DATE:	01/13/12				

230,000 GAL. TANK STRUCTURAL SHOP DRAWING
SCALE: N.T.S.

quasar energy group

quasar energy group
7624 Riverview Road
PO Box 31023
Cleveland OH 44141
Phone: 216.986.9999

Scale: SEE DETAIL

This drawing contains valuable confidential and proprietary information that belongs to quasar energy group, llc ("quasar"), and is subject to a separate Confidentiality and Nondisclosure Agreement. quasar is the author and owner of this drawing, and retains all common law, statutory and other rights and privileges with respect hereto, including copyrights. The information contained herein may not at any time be used for any unauthorized purpose, nor reproduced by or provided to any third party, without the prior written consent of quasar.

STATE OF OHIO
ALAN R. JOHNSON
46333
REGISTERED
PROFESSIONAL ENGINEER

AS BUILT

Rev.	ECN Number	Date
2		
1		
0	AS BUILT	_/_/_

Drawing Name:
230K GAL. BIOMASS EQUALIZATION TANK STRUCTURAL SHOP DRAWING

Project Name and Address:
0058-CAR-OH-11

RINGLER FARMS
ADS Facility
ecoFarmsystem 980

2277 County Road 156
Cardington, OH 43315-9742

Area: _
Author: BR
Calculated: _
Checked: RN
Sheet Number: S-12

© 2012, Quasar Energy Group, LLC. All rights reserved.

P:\SBE Projects\0058-CAR-OH-11 - Ringler Farms\BUILDING DRAWINGS\CURRENT DRAWINGS (AS BUILT)\RINGLER FARMS STRUCTURAL.dwg
11/15/2013 3:45 PM

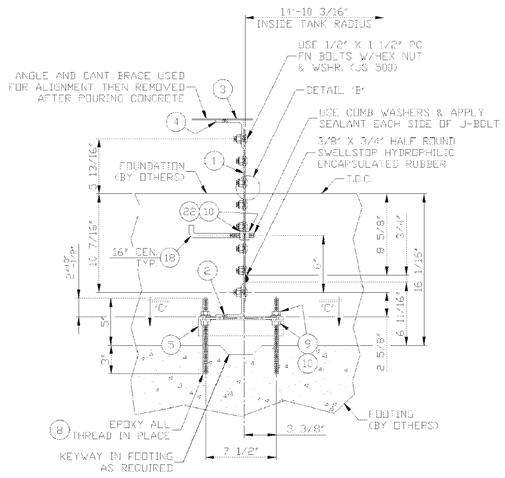

SECTION 'A'-'A'
(TYP. SECTION THROUGH B.S.R.)

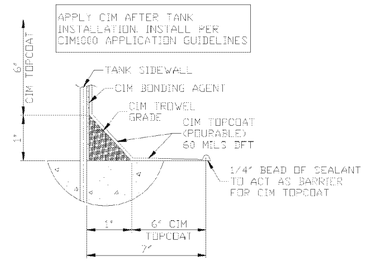

DETAIL 'B'

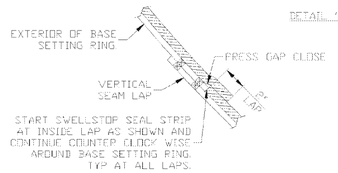

SWELLSTOP SEAL STRIP DETAIL
NOTE: STEEL SURFACES MUST BE FREE OF SEALANT AT SWELLSTOP LOCATIONS PRIOR TO APPLICATION

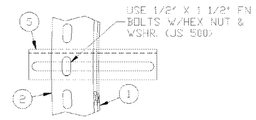

SECTION 'C'-'C'
BASE ANGLE TO SUPT. ANGLE

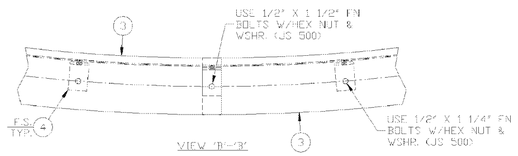

VIEW 'B'-'B'

ITEM	D/S	PART NO.	QTY	DESCRIPTION	EST. WT.	PAINT
1	B	2340001002	9	BSR PANEL 3/16"PL 2RV GR.50	113	I/E
2	B	2340001003	10	BASE ANGLE L3 1/2" X 3" X 1/4"	50	N
3	B	1009004003	10	CANT BRACE 10GA. GR.40	26	Z
4	B	475002004	80	EAVE ANGLE L3" X 3" X 1/4" X 2" LG.	1	Z
5	B	1211001030	20	SUPPORT CLIP 1/4"PL X 9" LG	3	N
6	-	SWSTADH	1	(GALS.) SWELLSTOP PRIMER ADHESIVE		N
7	-	SWSTHR383425	4	(25' ROLLS) 3/8" X 3/4" HALF ROUND SWELLSTOP		N
8	-	ALLTHR1208	40	ALL THREAD 1/2"-13 UNC X 8'	3	N
9	-	WSHFG0500	88	1/2" FLAT WASHER HDG		
10	-	NUTHG0500	242	1/2" HEX NUT HDG		
11	-	BLTFJS005001250	77	BOLT 1/2" X 1 1/4" FN JS500 GR8.2		
12	-	BLTFJS005001500	33	BOLT 1/2" X 1 1/2" FN JS500 GR8.2		
13	-	BLTFJSC005001250	275	BOLT 1/2" X 1 1/4" FN PC JS500 GR8.2		
14	-	BLTFJSC005001500	110	BOLT 1/2" X 1 1/2" FN PC JS500 GR8.2		
15	-	WSHFJS0500	495	1/2" FLAT WASHER JS 500		
16	-	NUTHJS0500	495	1/2" HEX NUT JS 500		
17	-	SFTSP600MLW	22	SIKAFLEX TS PLUS (WHITE) 600ML TUBES		
18	-	JBOLT0500816	70	1/2" X 8" J-BOLT		
19	-	HIRE500111	2	HILTI COMPOUND ADHESIVE HY 150 1:1		
20	-	HILTIAPP	1	HILTI APPLICATOR		
21	-	PNTBRUSH12	3	PAINT BRUSH 1/2"		
22	-	WSHCG0500	154	WASHER 1/2" COMB STEEL/NEOPRENE HDG		
23	B	2340001001	1	BSR PANEL 3/16"PL 2RV GR.50 W/AGITATOR MARK	113	I/E
24	-	CIM1000SEALPOUR	2	CIM 1000 POURABLE GRADE SEALANT IN 4 1/2 GAL. UNIT		
25	-	CIM1000ACT	4	CIM 1000 ACTIVATOR IN 1/2 GALLON UNIT		
26	-	CIMBONDAG	1	CIM BONDING AGENT IN 1 GAL. UNIT		
27	-	CIM1000SEAL	2	CIM 1000 TROWEL GRADE SEALANT IN 4 1/2 GAL. UNIT		

ASSY. WEIGHT= 2,150#
ROLL PANELS TO ø29'-8 1/2"

B.S.R. 3/16"PL GR.50 2 R.V.		
LOCATION	DESCRIPTION	QTY
J-BOLT TO PANEL NUTS	1/2" HX NUT HDG	140
J-BOLT TO PANEL COMBINATION WASHERS	1/2" COMBINATION WASHER	140
SUPT. ANGLE TO ALL THREAD WASHERS	1/2" FLAT WASHER HDG	80
SUPT. ANGLE TO ALL THREAD NUTS	1/2" HX NUT HDG	80
BASE L TO SUPT. L BOLTS	1/2" X 1 1/2" FN JS 500 BOLT	20
BASE L HORIZONTAL SEAM BOLTS	1/2" X 1 1/4" PC FN JS 500 BOLT	130
BASE L HORIZONTAL SEAM LAP BOLTS	1/2" X 1 1/2" PC FN JS 500 BOLT	20
BASE L HORIZONTAL SEAM WASHERS	1/2" JS 500 FLAT WASHER	170
BASE L HORIZONTAL SEAM NUTS	1/2" JS 500 HX NUT	170
VERTICAL SEAM BOLTS	1/2" X 1 1/4" PC FN JS 500 BOLT	120
VERTICAL SEAM WASHERS	1/2" JS 500 FLAT WASHER	120
VERTICAL SEAM NUTS	1/2" JS 500 HX NUT	120
SEALANT	SEALANT (TUBES)	20

TEMPORARY HARDWARE FOR ANGLE & CANT BRACE INSTALLATION		
LOCATION	DESCRIPTION	QTY
ITEM #4 HORIZONTAL SEAM BOLTS	1/2" X 1 1/2" PC FN JS 500 BOLT	80
ITEM #4 HORIZONTAL SEAM WASHERS	1/2" JS 500 FLAT WASHER	80
ITEM #4 HORIZONTAL SEAM NUTS	1/2" JS 500 HX NUT	80
CANT BRACE BOLTS	1/2" X 1 1/4" FN JS 500 BOLT	70
CANT BRACE LAP BOLTS	1/2" X 1 1/2" FN JS 500 BOLT	10
CANT BRACE WASHERS	1/2" JS 500 FLAT WASHER	80
CANT BRACE NUTS	1/2" JS 500 HX NUT	80

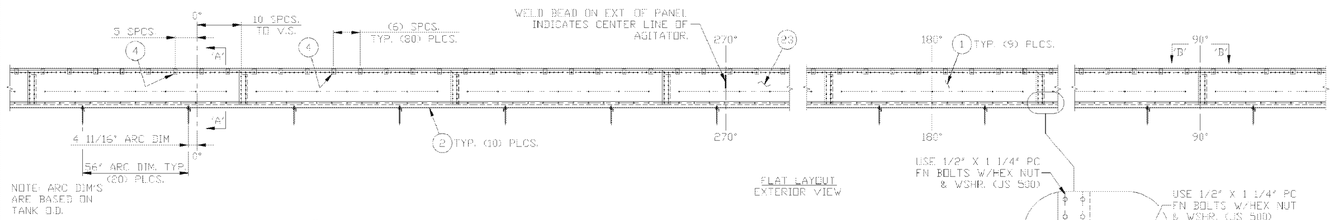

NOTE: ARC DIM'S ARE BASED ON TANK O.D.

FLAT LAYOUT
EXTERIOR VIEW

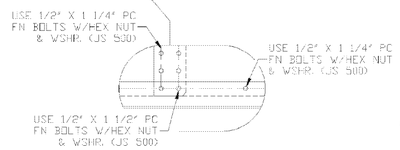

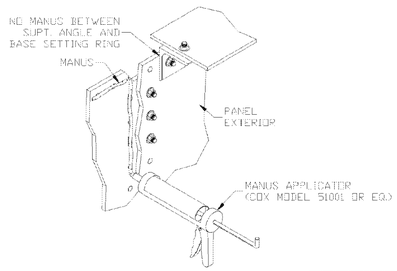

MANUS APPLICATION DETAIL

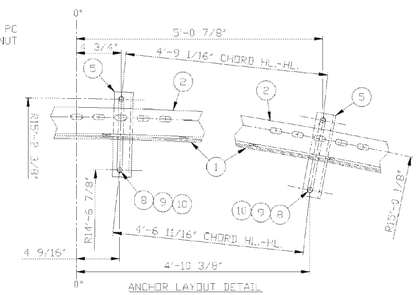

ANCHOR LAYOUT DETAIL
DIM'S ARE TO NEAREST 1/16"

REFERENCE DRAWING
CIM 1000 APPLICATION GUIDELINES-Q-037

CERTIFIED
APPROVED FOR CONSTRUCTION

INSTALLATION NOTES:
1.) BASE SETTING RING TO BE LEVEL WITHIN 1/16".
2.) BASE SETTING RING TO BE CONCENTRIC WITHIN 1/4".

THE INFORMATION ON THIS DOCUMENT IS CONFIDENTIAL PROPERTY OF TANK MANUFACTURER AND/OR ITS AFFILIATES. ANY OTHER USE, RETENTION, DISSEMINATION, FORWARDING, PRINTING OR COPYING OF THIS DOCUMENT TO UNAUTHORIZED PARTIES IS STRICTLY PROHIBITED, WITHOUT THE EXPRESSED WRITTEN CONSENT OF TANK MANUFACTURER.

TANK CONNECTION
AFFILIATE GROUP
3609 NORTH 13th ST. · PARSONS, KANSAS 67357
620.421.3711 · FAX: 620.421.0896

REV	REVISION	DATE	BY	APP
F				
E				
D				
C				
B				
A				

DRAWN BY:	DJC	B.S.R. ASSEMBLY FOR ø29' TANK			
DATE:	8/15/11				
REVIEWED BY:	JDB				
DATE:	8/19/11	R	SCALE: N'S	DRAWING NO.	BSR0292340001

230,000 GAL. TANK STRUCTURAL SHOP DRAWING
SCALE: N.T.S.

quasar energy group
quasar energy group
7624 Riverview Road
PO Box 31023
Cleveland OH 44141
Phone: 216.986.9999

Scale: SEE DETAIL

This drawing contains valuable confidential and proprietary information that belongs to quasar energy group, llc ("quasar"), and is subject to a separate Confidentiality and Nondisclosure Agreement. quasar is the author and owner of this drawing, and retains all common law, statutory and other rights and privileges with respect hereto, including copyrights. The information contained herein may not at any time be used for any unauthorized purpose, nor reproduced by or provided to any third party, without the prior written consent of quasar.

STATE OF OHIO
ALAN R. JOHNSON
46333
REGISTERED
PROFESSIONAL ENGINEER

AS BUILT

Rev.	ECN Number	Date
2		
1		
0	AS BUILT	__/__/__

Drawing Name:
230K GAL. BIOMASS EQUALIZATION TANK STRUCTURAL SHOP DRAWING

Project Name and Address:
0058-CAR-OH-11

RINGLER FARMS
ADS Facility
ecoFarmsystem 980

2277 County Road 156
Cardington, OH 43315-9742

Area: —
Author: BR
Calculated: —
Checked: RN
Sheet Number: S-13

© 2012, Quasar Energy Group, LLC. All rights reserved.

P:\SBE Projects\0058-CAR-OH-11 - Ringler Farms\BUILDING DRAWINGS\CURRENT DRAWINGS (AS BUILT)\RINGLER FARMS STRUCTURAL.dwg
11/15/2013 3:45 PM

ACCESSORY ORIENTATION CHART					
ITEM	SERVICE	SIZE	REF DEGREE	RADIUS	ELEV FROM BOTTOM OF TANK STEEL TO CTR OF ACCESSORY UNLESS NOTED OTHERWISE
19A/32	RFSO 150# HILLSIDE NOZZLE - INST. FLNG. SPARE	1"	180°	11'-9 1/2"	DECK
20/30	MANWAY / PRV	24"	CTR	CTR	DECK
19B/32	RFSO 150# HILLSIDE NOZZLE - INST. FLG. LEVEL SENSOR	1"	195°	11'-9 1/2"	DECK
-	EXT LADDER	STD	162.38	SHELL	-

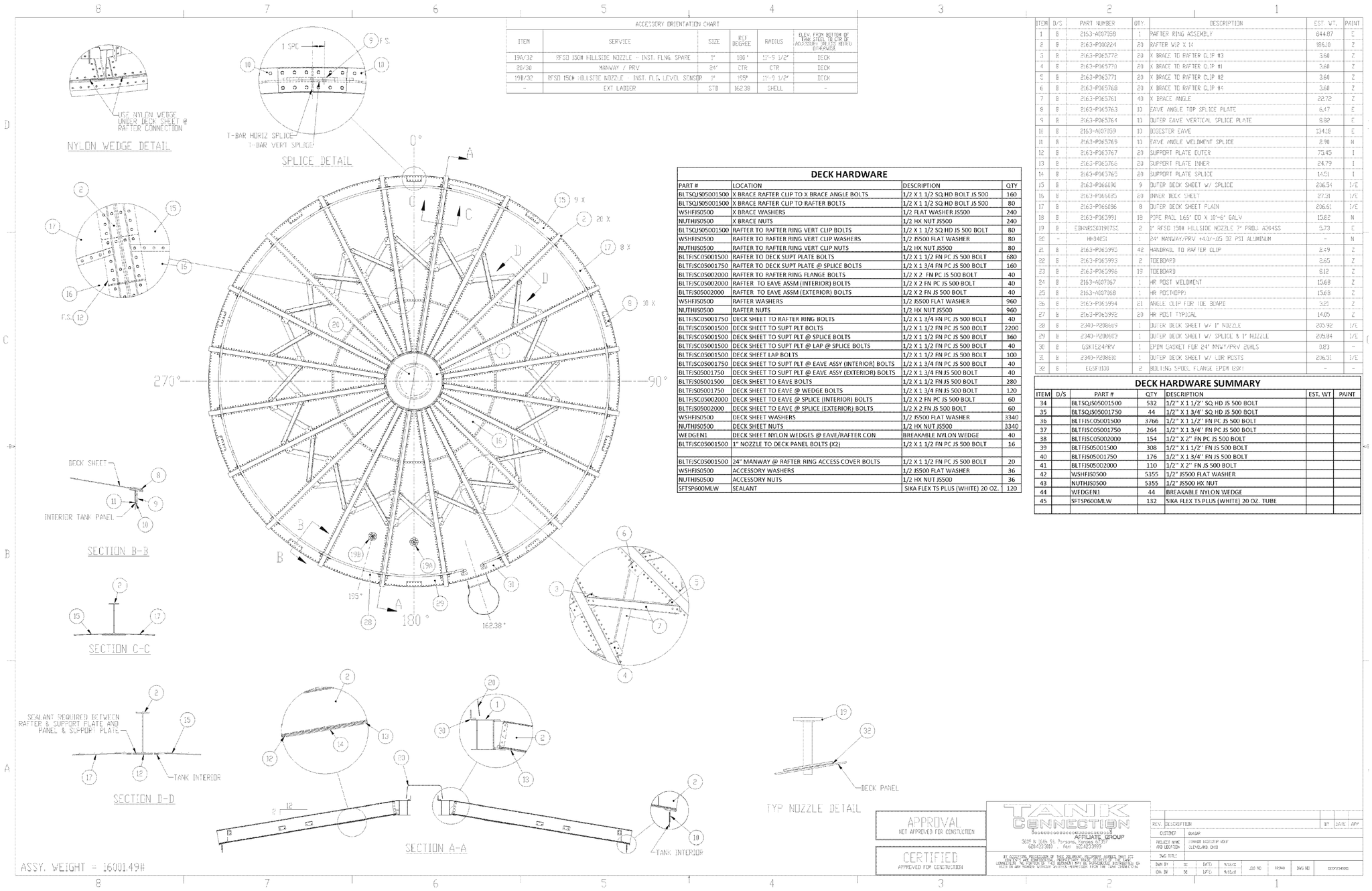

DECK HARDWARE

PART #	LOCATION	DESCRIPTION	QTY
BLTSQJS05001500	X BRACE RAFTER CLIP TO X BRACE ANGLE BOLTS	1/2 X 1 1/2 SQ HD BOLT JS 500	160
BLTSQJS05001500	X BRACE RAFTER CLIP TO RAFTER BOLTS	1/2 X 1 1/2 SQ HD BOLT JS 500	80
WSHFJS0500	X BRACE WASHERS	1/2 FLAT WASHER JS500	240
NUTHJS0500	X BRACE NUTS	1/2 HX NUT JS500	240
BLTSQJS05001500	RAFTER TO RAFTER RING VERT CLIP BOLTS	1/2 X 1 1/2 SQ HD JS 500 BOLT	80
WSHFJS0500	RAFTER TO RAFTER RING VERT CLIP WASHERS	1/2 JS500 FLAT WASHER	80
NUTHJS0500	RAFTER TO RAFTER RING VERT CLIP NUTS	1/2 HX NUT JS500	80
BLTFJSC05001500	RAFTER TO DECK SUPT PLATE BOLTS	1/2 X 1 1/2 FN PC JS 500 BOLT	680
BLTFJSC05001750	RAFTER TO DECK SUPT PLATE @ SPLICE BOLTS	1/2 X 1 3/4 FN PC JS 500 BOLT	160
BLTFJSC05002000	RAFTER TO RAFTER RING FLANGE BOLTS	1/2 X 2 FN PC JS 500 BOLT	40
BLTFJSC05002000	RAFTER TO EAVE ASSM (INTERIOR) BOLTS	1/2 X 2 FN PC JS 500 BOLT	40
BLTFJS05002000	RAFTER TO EAVE ASSM (EXTERIOR) BOLTS	1/2 X 2 FN JS 500 BOLT	40
WSHFJS0500	RAFTER WASHERS	1/2 JS500 FLAT WASHER	960
NUTHJS0500	RAFTER NUTS	1/2 HX NUT JS500	960
BLTFJSC05001750	DECK SHEET TO RAFTER RING BOLTS	1/2 X 1 3/4 FN PC JS 500 BOLT	40
BLTFJSC05001500	DECK SHEET TO SUPT PLT BOLTS	1/2 X 1 1/2 FN PC JS 500 BOLT	2200
BLTFJSC05001500	DECK SHEET TO SUPT PLT @ SPLICE BOLTS	1/2 X 1 1/2 FN PC JS 500 BOLT	360
BLTFJSC05001500	DECK SHEET TO SUPT PLT @ LAP @ SPLICE BOLTS	1/2 X 1 1/2 FN PC JS 500 BOLT	40
BLTFJSC05001500	DECK SHEET LAP BOLTS	1/2 X 1 1/2 FN PC JS 500 BOLT	100
BLTFJSC05001750	DECK SHEET TO SUPT PLT @ EAVE ASSY (INTERIOR) BOLTS	1/2 X 1 3/4 FN PC JS 500 BOLT	40
BLTFJS05001750	DECK SHEET TO SUPT PLT @ EAVE ASSY (EXTERIOR) BOLTS	1/2 X 1 3/4 FN JS 500 BOLT	40
BLTFJS05001500	DECK SHEET TO EAVE BOLTS	1/2 X 1 1/2 FN JS 500 BOLT	280
BLTFJS05001750	DECK SHEET TO EAVE @ WEDGE BOLTS	1/2 X 1 3/4 FN JS 500 BOLT	120
BLTFJSC05002000	DECK SHEET TO EAVE @ SPLICE (INTERIOR) BOLTS	1/2 X 2 FN PC JS 500 BOLT	60
BLTFJS05002000	DECK SHEET TO EAVE @ SPLICE (EXTERIOR) BOLTS	1/2 X 2 FN JS 500 BOLT	60
WSHFJS0500	DECK SHEET WASHERS	1/2 JS500 FLAT WASHER	3340
NUTHJS0500	DECK SHEET NUTS	1/2 HX NUT JS500	3340
WEDGEN1	DECK SHEET NYLON WEDGES @ EAVE/RAFTER CON	BREAKABLE NYLON WEDGE	40
BLTFJSC05001500	1" NOZZLE TO DECK PANEL BOLTS (X2)	1/2 X 1 1/2 FN PC JS 500 BOLT	16
BLTFJSC05001500	24" MANWAY @ RAFTER RING ACCESS COVER BOLTS	1/2 X 1 1/2 FN PC JS 500 BOLT	20
WSHFJS0500	ACCESSORY WASHERS	1/2 JS500 FLAT WASHER	36
NUTHJS0500	ACCESSORY NUTS	1/2 HX NUT JS500	36
SFTSP600MLW	SEALANT	SIKA FLEX TS PLUS (WHITE) 20 OZ.	120

ITEM	D/S	PART NUMBER	QTY	DESCRIPTION	EST. WT.	PAINT
1	B	2163-A007358	1	RAFTER RING ASSEMBLY	844.87	E
2	B	2163-P000224	20	RAFTER W12 X 14	186.10	Z
3	B	2163-P065772	20	X BRACE TO RAFTER CLIP #3	3.60	Z
4	B	2163-P065770	20	X BRACE TO RAFTER CLIP #1	3.60	Z
5	B	2163-P065771	20	X BRACE TO RAFTER CLIP #2	3.60	Z
6	B	2163-P065768	20	X BRACE TO RAFTER CLIP #4	3.60	Z
7	B	2163-P065761	10	X BRACE ANGLE	22.72	Z
8	B	2163-P065763	10	EAVE ANGLE TOP SPLICE PLATE	6.47	E
9	B	2163-P065764	10	OUTER EAVE VERTICAL SPLICE PLATE	8.82	E
10	B	2163-A007359	10	DIGESTER EAVE	134.18	E
11	B	2163-P065769	10	EAVE ANGLE WELDMENT SPLICE	2.90	N
12	B	2163-P065767	20	SUPPORT PLATE OUTER	75.45	I
13	B	2163-P065766	20	SUPPORT PLATE INNER	24.79	I
14	B	2163-P065765	20	SUPPORT PLATE SPLICE	14.51	I
15	B	2163-P066090	9	OUTER DECK SHEET W/ SPLICE	206.54	I/E
16	B	2163-P066085	20	INNER DECK SHEET	27.31	I/E
17	B	2163-P066086	8	OUTER DECK SHEET PLAIN	206.61	I/E
18	B	2163-P065991	18	PIPE RAIL 1.65" OD X 10'-6" GALV	15.62	N
19	B	EBHNRIS0190755	2	1" RFSO 150# HILLSIDE NOZZLE 7" PROJ A304SS	5.73	E
20	-	HH-24051	1	24" MANWAY/PRV +4.0/-.05 @ 2 PSI ALUMINUM	-	N
21	B	2163-P065995	42	HANDRAIL TO RAFTER CLIP	2.49	Z
22	B	2163-P065993	2	TOEBOARD	2.65	Z
23	B	2163-P065996	19	TOEBOARD	8.12	Z
24	B	2163-A007367	1	HR POST WELDMENT	15.68	Z
25	B	2163-A007368	1	HR POST(OPP)	15.68	Z
26	B	2163-P065994	21	ANGLE CLIP FOR TOE BOARD	3.21	Z
27	B	2163-P065992	20	HR POST TYPICAL	14.05	Z
28	B	2340-P208669	1	OUTER DECK SHEET W/ 1" NOZZLE	205.92	I/E
29	B	2340-P208602	1	OUTER DECK SHEET W/ SPLICE & 1" NOZZLE	205.84	I/E
30	B	GSKTE24PRV	1	EPDM GASKET FOR 24" MNWY/PRV 2BHLS	0.83	-
31	B	2340-P208610	1	OUTER DECK SHEET W/ LDR RESTS	206.51	I/E
32	B	EGSF0120	2	BOLTING SPOOL FLANGE EPDM GSKT	-	-

DECK HARDWARE SUMMARY

ITEM	D/S	PART #	QTY	DESCRIPTION	EST. WT	PAINT
34		BLTSQJS05001500	532	1/2" X 1 1/2" SQ HD JS 500 BOLT		
35		BLTSQJS05001750	44	1/2" X 1 3/4" SQ HD JS 500 BOLT		
36		BLTFJSC05001500	3766	1/2" X 1 1/2" FN PC JS 500 BOLT		
37		BLTFJSC05001750	264	1/2" X 1 3/4" FN PC JS 500 BOLT		
38		BLTFJSC05002000	154	1/2" X 2" FN PC JS 500 BOLT		
39		BLTFJS05001500	308	1/2" X 1 1/2" FN JS 500 BOLT		
40		BLTFJS05001750	176	1/2" X 1 3/4" FN JS 500 BOLT		
41		BLTFJS05002000	110	1/2" X 2" FN JS 500 BOLT		
42		WSHFJS0500	5355	1/2" JS500 FLAT WASHER		
43		NUTHJS0500	5355	1/2" JS500 HX NUT		
44		WEDGEN1	44	BREAKABLE NYLON WEDGE		
45		SFTSP600MLW	132	SIKA FLEX TS PLUS (WHITE) 20 OZ. TUBE		

APPROVAL
NOT APPROVED FOR CONSTUCTION

CERTIFIED
APPROVED FOR CONSTUCTION

TANK CONNECTION
AFFILIATE GROUP
3009 N. 26th St. Parsons, Kansas 67357
620-421-3611 - Fax: 620-421-3939

BY ACCEPTING POSSESSION OF THIS DOCUMENT, RECIPIENT AGREES THAT ITS CONTENTS ARE PROPRIETARY. NO PART OF THIS DOCUMENT MAY BE REPRODUCED, DISTRIBUTED OR USED IN ANY MANNER WITHOUT WRITTEN PERMISSION FROM THE TANK CONNECTION.

REV.	DESCRIPTION	BY	DATE	APP

CUSTOMER	QUASAR						
PROJECT NAME AND LOCATION	LEWIS CENTER, OHIO						
DWG TITLE							
DWN BY	SC	DATE:	9/12/13	JOB NO	REV#	DWG NO	DCOK154000
CHK BY	DC	DATE:	9/13/13				

230,000 GAL. TANK STRUCTURAL SHOP DRAWING

SCALE: N.T.S.

quasar energy group
7624 Riverview Road
PO Box 31023
Cleveland OH 44141
Phone: 216.986.9999

Scale: SEE DETAIL

This drawing contains valuable confidential and proprietary information that belongs to quasar energy group, llc ("quasar"), and is subject to a separate Confidentiality and Nondisclosure Agreement. quasar is the author and owner of this drawing, and retains all common law, statutory and other rights and privileges with respect hereto, including copyrights. The information contained herein may not at any time be used for any unauthorized purpose, nor reproduced by or provided to any third party, without the prior written consent of quasar.

STATE OF OHIO
ALAN R. JOHNSON
46333
REGISTERED
PROFESSIONAL ENGINEER

AS BUILT

Rev.	ECN Number	Date
2		
1		
0	AS BUILT	__/__/__

Drawing Name:
230K GAL. BIOMASS EQUALIZATION TANK STRUCTURAL SHOP DRAWING

Project Name and Address:
0058-CAR-OH-11

RINGLER FARMS
ADS Facility
ecoFarmsystem 980

2277 County Road 156
Cardington, OH 43315-9742

Area: --
Author: BR
Calculated: --
Checked: RN
Sheet Number: S-14

© 2012, Quasar Energy Group, LLC. All rights reserved.

P:\SBE Projects\0058-CAR-OH-11 - Ringler Farms\BUILDING DRAWINGS\CURRENT DRAWINGS (AS BUILT)\RINGLER FARMS STRUCTURAL.dwg
11/15/2013 3:45 PM

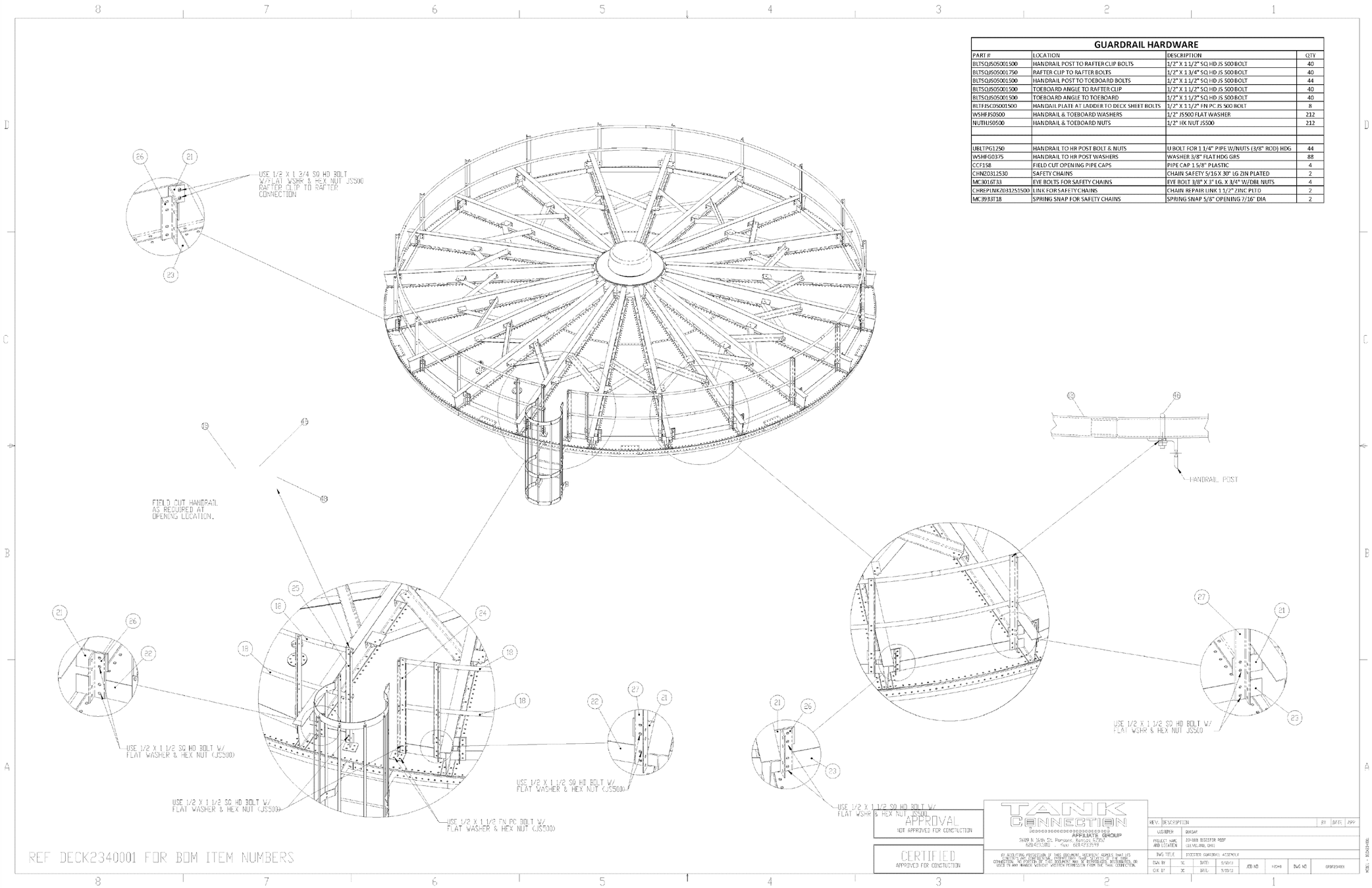

GUARDRAIL HARDWARE

PART #	LOCATION	DESCRIPTION	QTY
BLTSQJS05001500	HANDRAIL POST TO RAFTER CLIP BOLTS	1/2" X 1 1/2" SQ HD JS 500 BOLT	40
BLTSQJS05001750	RAFTER CLIP TO RAFTER BOLTS	1/2" X 1 3/4" SQ HD JS 500 BOLT	40
BLTSQJS05001500	HANDRAIL POST TO TOEBOARD BOLTS	1/2" X 1 1/2" SQ HD JS 500 BOLT	44
BLTSQJS05001500	TOEBOARD ANGLE TO RAFTER CLIP	1/2" X 1 1/2" SQ HD JS 500 BOLT	40
BLTSQJS05001500	TOEBOARD ANGLE TO TOEBOARD	1/2" X 1 1/2" SQ HD JS 500 BOLT	40
BLTFJSC05001500	HANDAIL PLATE AT LADDER TO DECK SHEET BOLTS	1/2" X 1 1/2" FN PC JS 500 BOLT	8
WSHFJS0500	HANDRAIL & TOEBOARD WASHERS	1/2" JS500 FLAT WASHER	212
NUTHUS0500	HANDRAIL & TOEBOARD NUTS	1/2" HX NUT JS500	212
UBLTPG1250	HANDRAIL TO HR POST BOLT & NUTS	U BOLT FOR 1 1/4" PIPE W/NUTS (3/8" ROD) HDG	44
WSHFG0375	HANDRAIL TO HR POST WASHERS	WASHER 3/8" FLAT HDG GR5	88
CCF158	FIELD CUT OPENING PIPE CAPS	PIPE CAP 1 5/8" PLASTIC	4
CHNZ0312530	SAFETY CHAINS	CHAIN SAFETY 5/16 X 30" LG ZIN PLATED	2
MC3016T33	EYE BOLTS FOR SAFETY CHAINS	EYE BOLT 3/8" X 3" LG. X 3/4" W/DBL NUTS	4
CHREPLNKZ0312251500	LINK FOR SAFETY CHAINS	CHAIN REPAIR LINK 1 1/2" ZINC PLTD	2
MC3933T18	SPRING SNAP FOR SAFETY CHAINS	SPRING SNAP 5/8" OPENING 7/16" DIA	2

APPROVAL
NOT APPROVED FOR CONSTRUCTION

CERTIFIED
APPROVED FOR CONSTRUCTION

TANK CONNECTION
AFFILIATE GROUP
3699 N 159th St. Bonsons, Kansas 66062
(913)422-3388 , Fax: (816)423-3599

AT ACCEPTING POSSESSION OF THIS DOCUMENT, RECEIVER AGREES THAT IT IS CONCEPTS, DESIGNS, DRAWINGS, SPECIFICATIONS AND OTHER DATA FOR THE TANK CONNECTION. NO PORTION OF THIS DOCUMENT MAY BE REPRODUCED, DISTRIBUTED, OR USED IN ANY MANNER WITHOUT WRITTEN PERMISSION FROM THE TANK CONNECTION.

REV.	DESCRIPTION	BY	DATE	APP
LOCATION	BIOGAS			
PROJECT NAME AND LOCATION	230,000 BIOGESTOR ROOF CLEVELAND, OHIO			
DWG TITLE	BIOGESTOR GUARDRAIL ASSEMBLY			
DWN BY	JC	DATE	9/19/12	
CHK BY	JC	DATE	9/19/12	

JOB NO | NONE | DWG NO | GRDRZ3400

230,000 GAL. TANK STRUCTURAL SHOP DRAWING

SCALE: N.T.S.

quasar energy group
7624 Riverview Road
PO Box 31023
Cleveland OH 44141
Phone: 216.986.9999

Scale: SEE DETAIL

This drawing contains valuable confidential and proprietary information that belongs to quasar energy group, llc ("quasar"), and is subject to a separate Confidentiality and Nondisclosure Agreement. quasar is the author and owner of this drawing, and retains all common law, statutory and other rights and privileges with respect hereto, including copyrights. The information contained herein may not at any time be used for any unauthorized purpose, nor reproduced by or provided to any third party, without the prior written consent of quasar.

STATE OF OHIO
ALAN R. JOHNSON
46333
REGISTERED
PROFESSIONAL ENGINEER

AS BUILT

Rev.	ECN Number	Date
2		
1		
0	AS BUILT	__/__/__

Drawing Name:
230K GAL. BIOMASS EQUALIZATION TANK STRUCTURAL SHOP DRAWING

Project Name and Address:
0058-CAR-OH-11

RINGLER FARMS
ADS Facility
ecoFarmsystem 980

2277 County Road 156
Cardington, OH 43315-9742

Area: --
Author: BR
Calculated: --
Checked: RN
Sheet Number: S-15

© 2012, Quasar Energy Group, LLC. All rights reserved.

P:\SBE Projects\0058-CAR-OH-11 - Ringler Farms\BUILDING DRAWINGS\CURRENT DRAWINGS (AS BUILT)\RINGLER FARMS STRUCTURAL.dwg
11/15/2013 3:44 PM

ITEM	D/S	PART NO.	QTY	DESCRIPTION	EST. WT.	PAINT
1	-	BLTFJSC05001250	8932	1/2" X 1 1/4" PC FN JS 500 BOLT		N
2	-	BLTFJSC05001500	607	1/2" X 1 1/2" PC FN JS 500 BOLT		N
3	-	WSHFJS0500	9414	1/2" FLAT WASHER JS500		N
4	-	NUTHJS0500	9539	1/2" HEX NUT JS500		N
5	-	WSHCG0500	125	1/2" COMBINATION WASHER GALV/NEOP.		N
6	-	SFTSP600MLW	202	SIKA FLEX TS PLUS (WHITE) 20 OZ. TUBES		N
7	-	STRPGSKTNIT232	31	LN. FT. 1 3/4" WIDE STRIP GASKET NITRILE 2.32 O/C		N

RING 1: 3/16"PL 2RV

LOCATION	DESCRIPTION	QTY
B.S.R. HORIZONTAL SEAM BOLTS	1/2" X 1 1/4" PC FN JS 500 BOLT	460
B.S.R. HORIZONTAL SEAM LAP BOLTS	1/2" X 1 1/2" PC FN JS 500 BOLT	20
B.S.R. HORIZONTAL SEAM WASHERS	1/2" FLAT WASHER	480
B.S.R. HORIZONTAL SEAM NUTS	1/2" HX NUT	480
VERTICAL SEAM BOLTS	1/2" X 1 1/4" PC FN JS 500 BOLT	450
VERTICAL SEAM WASHERS	1/2" FLAT WASHER	450
VERTICAL SEAM NUTS	1/2" HX NUT	450
HORIZONTAL SEAM BOLTS	1/2" X 1 1/4" PC FN JS 500 BOLT	460
HORIZONTAL SEAM LAP BOLTS	1/2" X 1 1/2" PC FN JS 500 BOLT	20
HORIZONTAL SEAM WASHERS	1/2" FLAT WASHER	480
HORIZONTAL SEAM NUTS	1/2" HX NUT	480
SHEET SEALANT	SEALANT (TUBES)	20

RING 2: 3/16"PL 2RV

LOCATION	DESCRIPTION	QTY
VERTICAL SEAM BOLTS	1/2" X 1 1/4" PC FN JS 500 BOLT	450
VERTICAL SEAM WASHERS	1/2" FLAT WASHER	450
VERTICAL SEAM NUTS	1/2" HX NUT	450
HORIZONTAL SEAM BOLTS	1/2" X 1 1/4" PC FN JS 500 BOLT	460
HORIZONTAL SEAM LAP BOLTS	1/2" X 1 1/2" PC FN JS 500 BOLT	20
HORIZONTAL SEAM WASHERS	1/2" FLAT WASHER	480
HORIZONTAL SEAM NUTS	1/2" HX NUT	480
SHEET SEALANT	SEALANT (TUBES)	20

RING 3: 3/16"PL 2RV

LOCATION	DESCRIPTION	QTY
VERTICAL SEAM BOLTS	1/2" X 1 1/4" PC FN JS 500 BOLT	450
VERTICAL SEAM WASHERS	1/2" FLAT WASHER	450
VERTICAL SEAM NUTS	1/2" HX NUT	450
HORIZONTAL SEAM BOLTS	1/2" X 1 1/4" PC FN JS 500 BOLT	460
HORIZONTAL SEAM LAP BOLTS	1/2" X 1 1/2" PC FN JS 500 BOLT	20
HORIZONTAL SEAM WASHERS	1/2" FLAT WASHER	480
HORIZONTAL SEAM NUTS	1/2" HX NUT	480
SHEET SEALANT	SEALANT (TUBES)	20

RING 4: 3/16"PL 2RV

LOCATION	DESCRIPTION	QTY
VERTICAL SEAM BOLTS	1/2" X 1 1/4" PC FN JS 500 BOLT	450
VERTICAL SEAM WASHERS	1/2" FLAT WASHER	450
VERTICAL SEAM NUTS	1/2" HX NUT	450
HORIZONTAL SEAM BOLTS	1/2" X 1 1/4" PC FN JS 500 BOLT	460
HORIZONTAL SEAM LAP BOLTS	1/2" X 1 1/2" PC FN JS 500 BOLT	20
HORIZONTAL SEAM WASHERS	1/2" FLAT WASHER	480
HORIZONTAL SEAM NUTS	1/2" HX NUT	480
SHEET SEALANT	SEALANT (TUBES)	20

RING 5: 3/16"PL 2RV

LOCATION	DESCRIPTION	QTY
VERTICAL SEAM BOLTS	1/2" X 1 1/4" PC FN JS 500 BOLT	450
VERTICAL SEAM WASHERS	1/2" FLAT WASHER	450
VERTICAL SEAM NUTS	1/2" HX NUT	450
HORIZONTAL SEAM BOLTS	1/2" X 1 1/4" PC FN JS 500 BOLT	460
HORIZONTAL SEAM LAP BOLTS	1/2" X 1 1/2" PC FN JS 500 BOLT	20
HORIZONTAL SEAM WASHERS	1/2" FLAT WASHER	480
HORIZONTAL SEAM NUTS	1/2" HX NUT	480
SHEET SEALANT	SEALANT (TUBES)	20

RING 6: 3/16"PL 1RV

LOCATION	DESCRIPTION	QTY
VERTICAL SEAM BOLTS	1/2" X 1 1/4" PC FN JS 500 BOLT	240
VERTICAL SEAM WASHERS	1/2" FLAT WASHER	240
VERTICAL SEAM NUTS	1/2" HX NUT	240
HORIZONTAL SEAM BOLTS	1/2" X 1 1/4" PC FN JS 500 BOLT	470
HORIZONTAL SEAM LAP BOLTS	1/2" X 1 1/2" PC FN JS 500 BOLT	10
HORIZONTAL SEAM WASHERS	1/2" FLAT WASHER	480
HORIZONTAL SEAM NUTS	1/2" HX NUT	480
SHEET SEALANT	SEALANT (TUBES)	15

RING 7: 10GA. 1RV

LOCATION	DESCRIPTION	QTY
VERTICAL SEAM BOLTS	1/2" X 1 1/4" PC FN JS 500 BOLT	240
VERTICAL SEAM WASHERS	1/2" FLAT WASHER	240
VERTICAL SEAM NUTS	1/2" HX NUT	240
HORIZONTAL SEAM BOLTS	1/2" X 1 1/4" PC FN JS 500 BOLT	470
HORIZONTAL SEAM LAP BOLTS	1/2" X 1 1/4" PC FN JS 500 BOLT	10
HORIZONTAL SEAM WASHERS	1/2" FLAT WASHER	480
HORIZONTAL SEAM NUTS	1/2" HX NUT	480
SHEET SEALANT	SEALANT (TUBES)	15

RING 8: 10GA. 1RV

LOCATION	DESCRIPTION	QTY
VERTICAL SEAM BOLTS	1/2" X 1 1/4" PC FN JS 500 BOLT	240
VERTICAL SEAM WASHERS	1/2" FLAT WASHER	240
VERTICAL SEAM NUTS	1/2" HX NUT	240
HORIZONTAL SEAM BOLTS	1/2" X 1 1/4" PC FN JS 500 BOLT	470
HORIZONTAL SEAM LAP BOLTS	1/2" X 1 1/4" PC FN JS 500 BOLT	10
HORIZONTAL SEAM WASHERS	1/2" FLAT WASHER	480
HORIZONTAL SEAM NUTS	1/2" HX NUT	480
SHEET SEALANT	SEALANT (TUBES)	15

RING 9: 10GA. 1RV

LOCATION	DESCRIPTION	QTY
VERTICAL SEAM BOLTS	1/2" X 1 1/4" PC FN JS 500 BOLT	40
VERTICAL SEAM WASHERS	1/2" FLAT WASHER	40
VERTICAL SEAM NUTS	1/2" HX NUT	40
HORIZONTAL SEAM BOLTS	1/2" X 1 1/4" PC FN JS 500 BOLT	470
HORIZONTAL SEAM LAP BOLTS	1/2" X 1 1/4" PC FN JS 500 BOLT	10
HORIZONTAL SEAM WASHERS	1/2" FLAT WASHER	480
HORIZONTAL SEAM NUTS	1/2" HX NUT	480
SHEET SEALANT	SEALANT (TUBES)	15

TOP RING: 10GA. 1RV

LOCATION	DESCRIPTION	QTY
VERTICAL SEAM BOLTS	1/2" X 1 1/4" PC FN JS 500 BOLT	240
VERTICAL SEAM WASHERS	1/2" JS 500 FLAT WASHER	240
VERTICAL SEAM NUTS	1/2" JS 500 HX NUT	240
SHEET SEALANT	SEALANT (TUBES)	15

MISCELLANEOUS HARDWARE & GASKET

LOCATION	DESCRIPTION	QTY
SPIDER BOLTS	1/2" X 1 1/2" PC FN JS 500 BOLT	136
SHELL MANWAY & MIXER MOUNT BOLTS	1/2" X 1 1/2" PC FN JS 500 BOLT	172
ACCESSORY WASHERS	1/2" FLAT WASHER	308
ACCESSORY NUTS	1/2" HX NUT	308
FLUSH CLEAN-OUT BOLTS	1/2" X 1 1/2" PC FN JS 500 BOLT	114
FLUSH CLEAN-OUT WASHERS	1/2" COMBINATION WASHER	114
FLUSH CLEAN-OUT NUTS	1/2" HX NUT	114
FLUSH CLEAN-OUT GASKET	STRIP GASKET 1 3/4" WIDE NITRILE (FEET)	28
ACCESSORY SEALANT	SEALANT (TUBES)	9

THE INFORMATION ON THIS DOCUMENT IS CONFIDENTIAL PROPERTY OF TANK MANUFACTURER AND/OR ITS AFFILIATES. ANY OTHER USE, RETENTION, DISSEMINATION, FORWARDING, PRINTING OR COPYING OF THIS DOCUMENT TO UNAUTHORIZED PARTIES IS STRICTLY PROHIBITED, WITHOUT THE EXPRESSED WRITTEN CONSENT OF TANK MANUFACTURER.

TANK CONNECTION
AFFILIATE GROUP
3609 North 16th St. · Parsons, Kansas 67357
620.423.3010 · FAX: 620.423.3999

REV	REVISION	DATE	BY	APP
E				
D				
C				
B				
A				

DRAWN BY:	DJC	HARDWARE SHEET		
DATE:	9/06/11			
REVIEWED BY:	JK			
DATE:	9/06/11	B	SCALE: NTS	DRAWING NO. HRDW2340001

230,000 GAL. TANK STRUCTURAL SHOP DRAWING

SCALE: N.T.S.

quasar energy group

quasar energy group
7624 Riverview Road
PO Box 31023
Cleveland OH 44141
Phone: 216.986.9999

Scale: SEE DETAIL

This drawing contains valuable confidential and proprietary information that belongs to quasar energy group, llc ("quasar"), and is subject to a separate Confidentiality and Nondisclosure Agreement. quasar is the author and owner of this drawing, and retains all common law, statutory and other rights and privileges with respect hereto, including copyrights. The information contained herein may not at any time be used for any unauthorized purpose, nor reproduced by or provided to any third party, without the prior written consent of quasar.

STATE OF OHIO
ALAN R. JOHNSON
46333
REGISTERED
PROFESSIONAL ENGINEER

AS BUILT

Rev.	ECN Number	Date
2		
1		
0	AS BUILT	__/__/__

Drawing Name:
230K GAL. BIOMASS EQUALIZATION TANK STRUCTURAL SHOP DRAWING

Project Name and Address:
0058-CAR-OH-11

RINGLER FARMS
ADS Facility
ecoFarmsystem 980

2277 County Road 156
Cardington, OH 43315-9742

Area: _
Author: BR
Calculated: _
Checked: RN
Sheet Number: S-16

© 2012, Quasar Energy Group, LLC. All rights reserved.

P:\SBE Projects\0058-CAR-OH-11 - Ringler Farms\BUILDING DRAWINGS\CURRENT DRAWINGS (AS BUILT)\RINGLER FARMS STRUCTURAL.dwg
11/15/2013 3:44 PM

ITEM	D/S	PART NO.	QTY	DESCRIPTION	EST. WT.	PAINT
1	B	2163001019	1	69.6" TOP SECTION ASSEMBLY	166	Z
2	B	LSA006	1	58" MID SECTION ASSEMBLY	91	Z
3	B	LSA011	1	UPPER & LOWER LADDER REST PLATFORM ASSY - LH	268	Z
4	B	LHA001	1	REST PLATFORM ASSEMBLY -LH	295	Z
5	B	LSA007	1	MID SECTION ASSEMBLY 116"	172	Z
6	B	LSA008	1	STANDARD RING LADDER ASSEMBLY	133	Z
7	-	BLTFJSC05001750	37	1/2" X 1 3/4" PC FN JS 500		N
8	B	LKDRASSY	1	LADDER LOCKABLE DOOR ASSY - AL	9	N

ASSEMBLY WEIGHT= 1,134 LBS

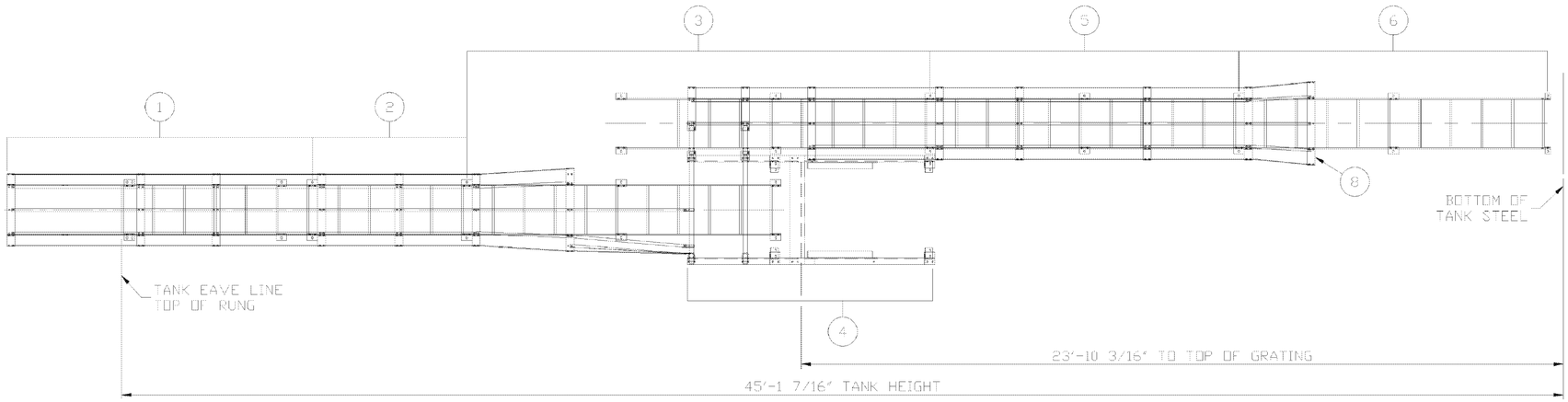

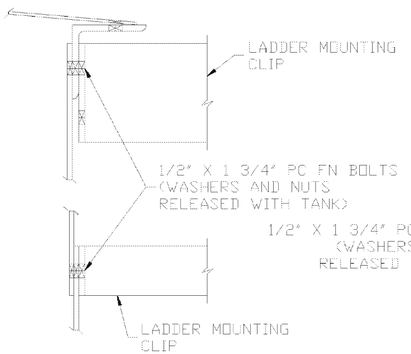

TOP & BOTTOM LADDER MOUNTING CLIP
ATTACHMENT TO SIDEWALL DETAIL

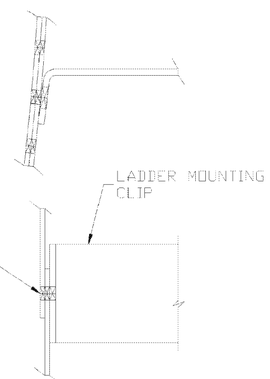

STANDARD LADDER MOUNTING CLIP
ATTACHMENT TO SIDEWALL DETAIL

ASSEMBLY NOTE:
INITIALLY ASSEMBLE UTILIZING LOOSE FIT CONNECTIONS. INSTALL AND ALIGN ALL PARTS BEFORE FULLY TIGHTENING HARDWARE.

MATERIALS OF CONSTRUCTION:
ALL MATERIALS ARE A1011 GR36 (A36) AND AS BELOW UNLESS NOTED OTHERWISE:
3/8PL X 2 1/2" STRINGERS
3/4" ROUND BAR RUNGS
3/16PL X 3" WIDE HOOPS
3/16PL X 1" CAGE BARS

LADDER IS OSHA COMPLIANT

LADDER IS HOT DIPPED GALVANIZED

FOR ADDITIONAL ASSEMBLY DETAILS REFERENCE DRAWINGS:
2163001019 LSA006
LSA007 LSA008
LSA011 LHA001 (SHEET 1 & 2)
LKDRASSY

BY ACCEPTING POSSESSION OF THIS DOCUMENT, RECIPIENT AGREES THAT ITS CONTENTS ARE CONFIDENTIAL, PROPRIETARY TRADE SECRETS OF THE TANK CONNECTION. NO PORTION OF THIS DOCUMENT MAY BE REPRODUCED, DISTRIBUTED, OR USED IN ANY MANNER WITHOUT WRITTEN PERMISSION FROM THE TANK CONNECTION.

TANK CONNECTION
AFFILIATE GROUP
3609 North 16th St. Parsons, Kansas 67357
620.421.3515 FAX: 620.421.3869

REV	REVISION	DATE	BY	APP
E				
D				
C				
B				
A				

DRAWN BY:	JA	45'-1 7/16" LADDER ASSEMBLY		
DATE:	6/15/11			
REVIEWED BY:	DJC			
DATE:	5/20/11	B	SCALE: NTS	DRAWING NO. ELL2163001

230,000 GAL. TANK STRUCTURAL SHOP DRAWING

SCALE: N.T.S.

quasar energy group
quasar energy group
7624 Riverview Road
PO Box 31023
Cleveland OH 44141
Phone: 216.986.9999

Scale: SEE DETAIL

This drawing contains valuable confidential and proprietary information that belongs to quasar energy group, llc ("quasar"), and is subject to a separate Confidentiality and Nondisclosure Agreement. quasar is the author and owner of this drawing, and retains all common law, statutory and other rights and privileges with respect hereto, including copyrights. The information contained herein may not at any time be used for any unauthorized purpose, nor reproduced by or provided to any third party, without the prior written consent of quasar.

STATE OF OHIO
ALAN R. JOHNSON
46333
REGISTERED
PROFESSIONAL ENGINEER

AS BUILT

Rev.	ECN Number	Date
2		
1		
0	AS BUILT	__/__/__

Drawing Name:
230K GAL. BIOMASS EQUALIZATION TANK STRUCTURAL SHOP DRAWING

Project Name and Address:
0058-CAR-OH-11

RINGLER FARMS
ADS Facility
ecoFarmsystem 980

2277 County Road 156
Cardington, OH 43315-9742

Area: _
Author: BR
Calculated: _
Checked: RN
Sheet Number: S-17

© 2012, Quasar Energy Group, LLC. All rights reserved.

P:\SBE Projects\0058-CAR-OH-11 - Ringler Farms\BUILDING DRAWINGS\CURRENT DRAWINGS (AS BUILT)\RINGLER FARMS STRUCTURAL.dwg
11/15/2013 3:44 PM

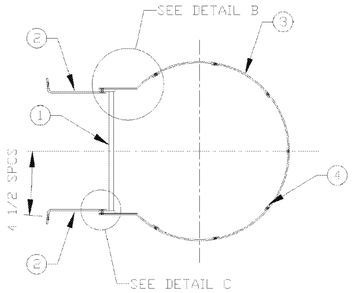

VIEW A-A

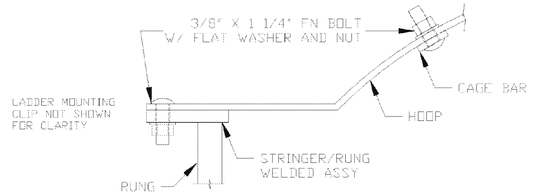

DETAIL B

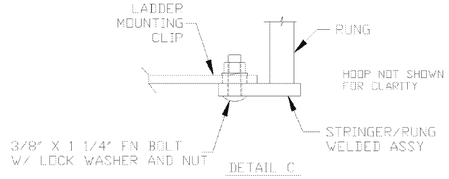

DETAIL C

	ITEM	D/S	PART NO.	QTY	DESCRIPTION	EST. WT.	PAINT
2	1	B	2163001018	1	STRINGER/RUNG ASSEMBLY	76	
1	2	B	70389020	2	LADDER MOUNTING CLIP	3	
	3	B	HOOP2	3	HOOP - MID	12	
	4	B	2163001017	7	CAGE BAR X 9'-10 1/8" OAL	6	
	5	-	BLTFG03751250	61	3/8" X 1 1/4" FN BOLT HDG		
	6	-	NUTHG0375	61	3/8" NUT HEX		
	7	-	WSHFG0375	58	3/8" FLAT WASHER HDG		
	8	-	WSHLG0375	3	3/8" LOCK WASHER HDG		

ASSEMBLY NOTE:
INITIALLY ASSEMBLE UTILIZING LOOSE FIT CONNECTIONS. INSTALL AND ALIGN ALL PARTS BEFORE FULLY TIGHTENING HARDWARE.

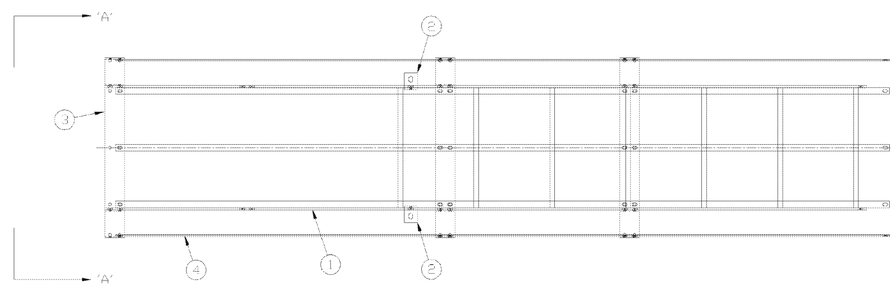

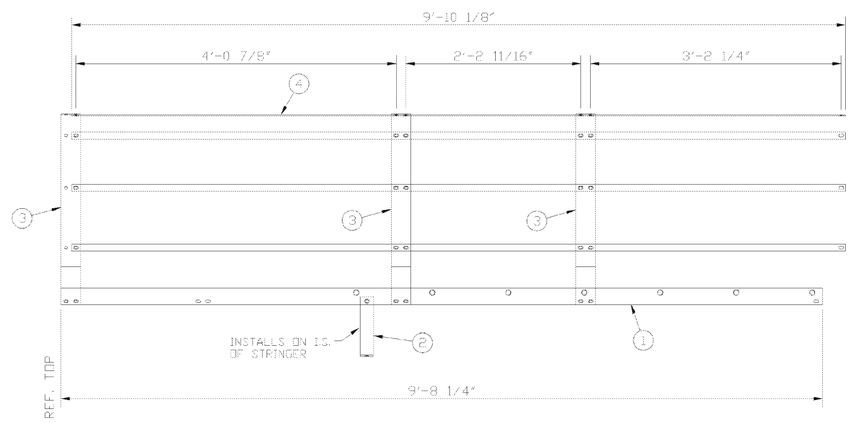

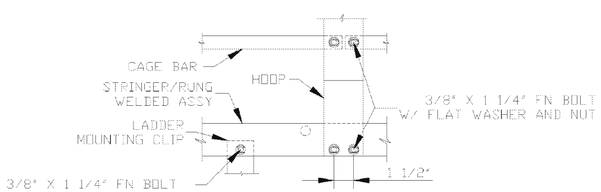

SIDE VIEW ASSEMBLY DETAIL

ASSEMBLY WEIGHT = 166 LBS

THE INFORMATION ON THIS DOCUMENT IS CONFIDENTIAL PROPERTY OF THE TANK MANUFACTURER AND/OR ITS AFFILIATES. ANY OTHER USE, RETENTION, DISSEMINATION, FORWARDING, PRINTING OR COPYING OF THIS DOCUMENT TO UNAUTHORIZED PARTIES IS STRICTLY PROHIBITED, WITHOUT THE EXPRESSED WRITTEN CONSENT OF THE TANK MANUFACTURER.

REV	BY	CK	DATE	DESCRIPTION
C				
B				
A	MP	DJC	11/29/11	REVISED P/N'S ITEMS #1 & #2

DRAWN BY: JA
DATE: 5/17/11
REVIEWED BY: DJC
DATE: 8/26/11
R
DRAWING NO. 2163001019

69.6" TOP SECTION ASSEMBLY

230,000 GAL. TANK STRUCTURAL SHOP DRAWING

SCALE: N.T.S.

quasar energy group
7624 Riverview Road
PO Box 31023
Cleveland OH 44141
Phone: 216.986.9999

Scale: SEE DETAIL

This drawing contains valuable confidential and proprietary information that belongs to quasar energy group, llc ("quasar"), and is subject to a separate Confidentiality and Nondisclosure Agreement. quasar is the author and owner of this drawing, and retains all common law, statutory and other rights and privileges with respect hereto, including copyrights. The information contained herein may not at any time be used for any unauthorized purpose, nor reproduced by or provided to any third party, without the prior written consent of quasar.

STATE OF OHIO
ALAN R. JOHNSON
46333
REGISTERED
PROFESSIONAL ENGINEER

AS BUILT

Rev.	ECN Number	Date
2		
1		
0	AS BUILT	__/__/__

Drawing Name
230K GAL. BIOMASS EQUALIZATION TANK STRUCTURAL SHOP DRAWING

Project Name and Address:
0058-CAR-OH-11

RINGLER FARMS
ADS Facility
ecoFarmsystem 980

2277 County Road 156
Cardington, OH 43315-9742

Area: __
Author: BR
Calculated: __
Checked: RN
Sheet Number: S-18

© 2012, Quasar Energy Group, LLC. All rights reserved.

P:\SBE Projects\0058-CAR-OH-11 - Ringler Farms\BUILDING DRAWINGS\CURRENT DRAWINGS (AS BUILT)\RINGLER FARMS STRUCTURAL.dwg
11/15/2013 3:43 PM

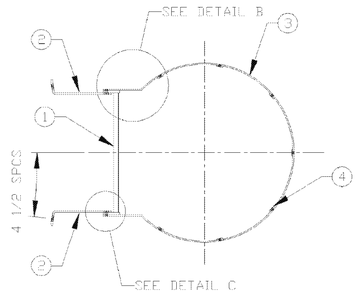

VIEW A-A

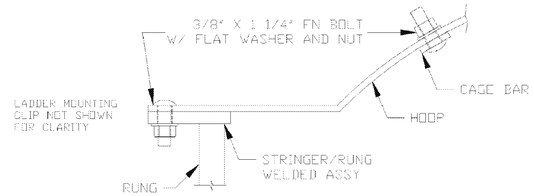

DETAIL B

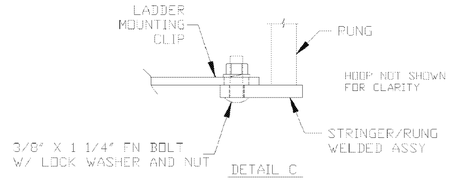

DETAIL C

ITEM	D/S	PART NO.	QTY	DESCRIPTION	EST. WT.	PAINT
1	B	LSM001	1	STRINGER/RUNG ASSEMBLY X 57 7/8" O.A.L.	40	
2	B	LCP4	2	LADDER MOUNTING CLIP	3	
3	B	HOOP2	2	HOOP - MID	12	
4	B	CB002	7	CAGE BAR X 57 3/4" OAL	3	
5	-	BLTFG03751250	42	3/8" X 1 1/4" FN BOLT HDG		
6	-	NUTHG0375	42	3/8" NUT HEX		
7	-	WSHFG0375	37	3/8" FLAT WASHER HDG		
8	-	WSHLG0375	5	3/8" LOCK WASHER HDG		

ASSEMBLY NOTE:
INITIALLY ASSEMBLE UTILIZING LOOSE FIT CONNECTIONS. INSTALL AND ALIGN ALL PARTS BEFORE FULLY TIGHTENING HARDWARE.

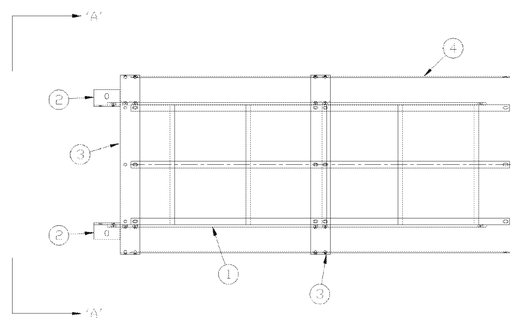

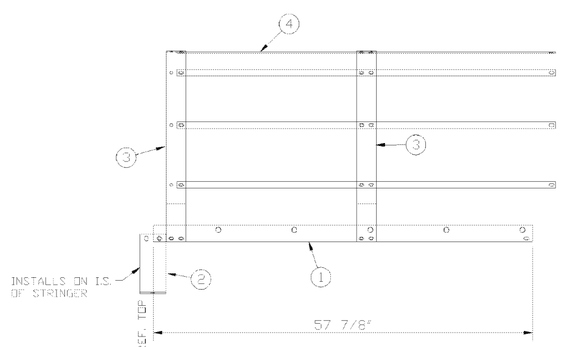

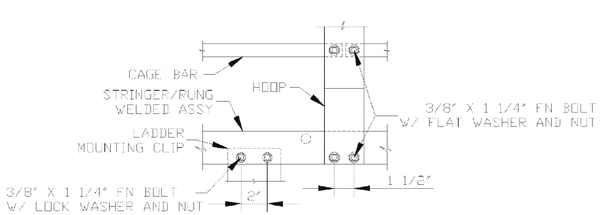

SIDE VIEW ASSEMBLY DETAIL

ASSEMBLY WEIGHT = 91 LBS

THE INFORMATION ON THIS DOCUMENT IS CONFIDENTIAL PROPERTY OF TANK MANUFACTURER AND/OR ITS AFFILIATES. ANY OTHER USE, RETENTION, DISSEMINATION, FORWARDING, PRINTING OR COPYING OF THIS DOCUMENT TO UNAUTHORIZED PARTIES IS STRICTLY PROHIBITED, WITHOUT THE EXPRESSED WRITTEN CONSENT OF TANK MANUFACTURER.

TANK CONNECTION
AFFILIATE GROUP
3609 NORTH 16TH ST. · PARSONS, KANSAS 67357
620.421.0181 · FAX: 620.421.0804

REV	REVISION	DATE	BY	APP
E				
D				
C				
B	UPDATED BORDER	6/21/11	JA	DJC
A	MADE TO REFLECTCT STRINGER ASSY	11/6/07	JT	DJC

DRAWN BY:	JT	58" MID. LADDER ASSY.			
DATE:	10/9/07				
REVIEWED BY:	DJC				
DATE:	10/19/07	C	SCALE: NTS	DRAWING NO.	LSA006

230,000 GAL. TANK STRUCTURAL SHOP DRAWING

SCALE: N.T.S.

quasar energy group
quasar energy group
7624 Riverview Road
PO Box 31023
Cleveland OH 44141
Phone: 216.986.9999

Scale: SEE DETAIL

This drawing contains valuable confidential and proprietary information that belongs to quasar energy group, llc ("quasar"), and is subject to a separate Confidentiality and Nondisclosure Agreement. quasar is the author and owner of this drawing, and retains all common law, statutory and other rights and privileges with respect hereto, including copyrights. The information contained herein may not at any time be used for any unauthorized purpose, nor reproduced by or provided to any third party, without the prior written consent of quasar.

STATE OF OHIO
ALAN R. JOHNSON
46333
REGISTERED
PROFESSIONAL ENGINEER

AS BUILT

Rev.	ECN Number	Date
2		
1		
0	AS BUILT	__/__/__

Drawing Name:
230K GAL. BIOMASS EQUALIZATION TANK STRUCTURAL SHOP DRAWING

Project Name and Address:
0058-CAR-OH-11

RINGLER FARMS
ADS Facility
ecoFarmsystem 980

2277 County Road 156
Cardington, OH 43315-9742

Area: --
Author: BR
Calculated: --
Checked: RN
Sheet Number: S-19

© 2012, Quasar Energy Group, LLC. All rights reserved.

P:\SBE Projects\0058-CAR-OH-11 - Ringler Farms\BUILDING DRAWINGS\CURRENT DRAWINGS (AS BUILT)\RINGLER FARMS STRUCTURAL.dwg
11/15/2013 3:43 PM

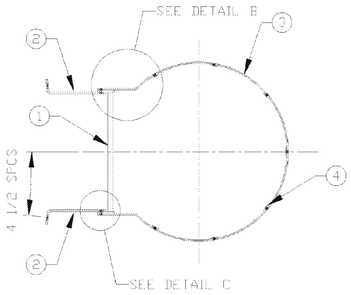

VIEW A-A

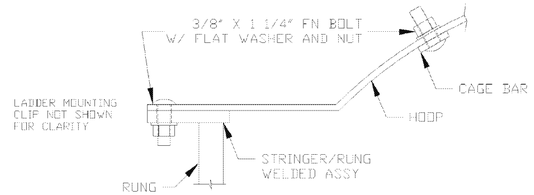

DETAIL B

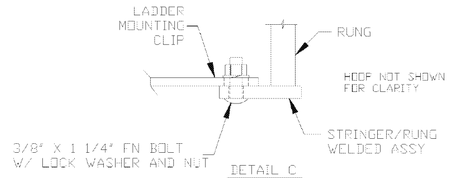

DETAIL C

ITEM	I/S	PART NO.	QTY	DESCRIPTION	EST. WT.	PAINT
1	B	LSM002	1	STRINGER/RUNG ASSEMBLY X 115 7/8" O.A.L.	82	
2	B	LCP4	4	LADDER MOUNTING CLIP	3	
3	B	HOOP2	3	HOOP - MID	12	
4	B	CB003	7	CAGE BAR X 115 3/4" OAL	6	
5	-	BLTFG03751250	66	3/8" X 1 1/4" FN BOLT HDG		
6	-	NUTHG0375	66	3/8" NUT HEX		
7	-	WSHFG0375	57	3/8" FLAT WASHER HDG		
8	-	WSHLG0375	9	3/8" LOCK WASHER HDG		

ASSEMBLY NOTE:
INITIALLY ASSEMBLE UTILIZING LOOSE FIT CONNECTIONS. INSTALL AND ALIGN ALL PARTS BEFORE FULLY TIGHTENING HARDWARE.

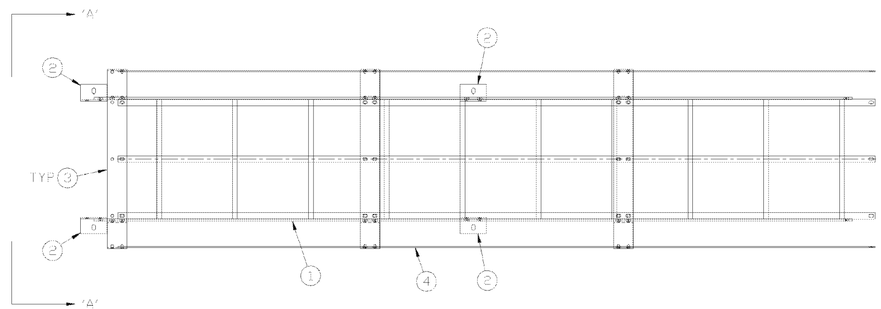

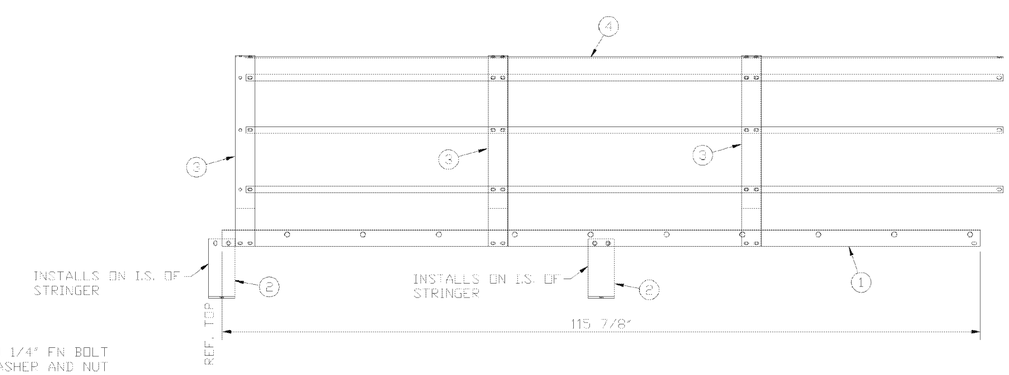

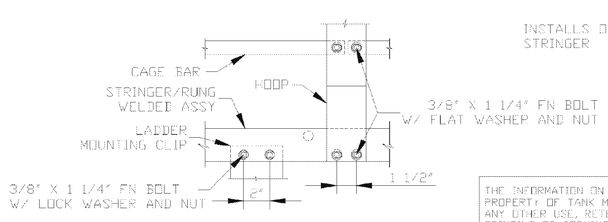

SIDE VIEW ASSEMBLY DETAIL

ASSEMBLY WEIGHT = 172 LBS

THE INFORMATION ON THIS DOCUMENT IS CONFIDENTIAL PROPERTY OF TANK MANUFACTURER AND/OR ITS AFFILIATES. ANY OTHER USE, RETENTION, DISSEMINATION, FORWARDING, PRINTING OR COPYING OF THIS DOCUMENT TO UNAUTHORIZED PARTIES IS STRICTLY PROHIBITED, WITHOUT THE EXPRESSED WRITTEN CONSENT OF TANK MANUFACTURER.

TANK CONNECTION
AFFILIATE GROUP
3609 NORTH 16TH ST., PARSONS, KANSAS 67357
620.423.3010 FAX: 620.423.3099

REV	REVISION	DATE	BY	APP
E				
D				
C				
B	UPDATED BORDER	11/23/09	JA	DJC
A	CORRECTED TO REFLECTCT STRINGER ASSEMBLY	10/18/07	JT	DJC

DRAWN BY:	JT	116" MID LADDER ASSY.			
DATE:	10/9/07				
REVIEWED BY:	DJC				
DATE:	10/19/07	C	SCALE: NTS	DRAWING NO.	LSA007

230,000 GAL. TANK STRUCTURAL SHOP DRAWING

SCALE: N.T.S.

quasar energy group
7624 Riverview Road
PO Box 31023
Cleveland OH 44141
Phone: 216.986.9999

Scale: SEE DETAIL

This drawing contains valuable confidential and proprietary information that belongs to quasar energy group, llc ("quasar"), and is subject to a separate Confidentiality and Nondisclosure Agreement. quasar is the author and owner of this drawing, and retains all common law, statutory and other rights and privileges with respect hereto, including copyrights. The information contained herein may not at any time be used for any unauthorized purpose, nor reproduced by or provided to any third party, without the prior written consent of quasar.

STATE OF OHIO
ALAN R. JOHNSON
46333
REGISTERED
PROFESSIONAL ENGINEER

AS BUILT

Rev.	ECN Number	Date
2		
1		
0	AS BUILT	__/__/__

Drawing Name:
230K GAL. BIOMASS EQUALIZATION TANK STRUCTURAL SHOP DRAWING

Project Name and Address:
0058-CAR-OH-11

RINGLER FARMS
ADS Facility
ecoFarmsystem 980

2277 County Road 156
Cardington, OH 43315-9742

Area: --
Author: BR
Calculated: --
Checked: RN
Sheet Number: S-20

© 2012, Quasar Energy Group, LLC. All rights reserved.

P:\SBE Projects\0058-CAR-OH-11 - Ringler Farms\BUILDING DRAWINGS\CURRENT DRAWINGS (AS BUILT)\RINGLER FARMS STRUCTURAL.dwg
11/15/2013 3:43 PM

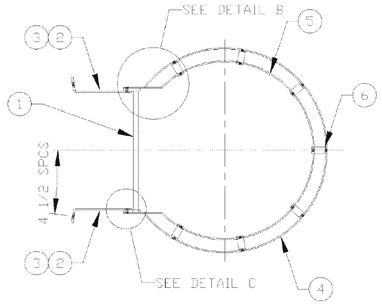

VIEW A-A

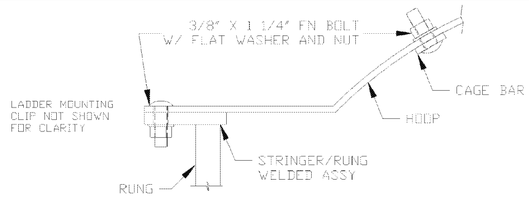

DETAIL B

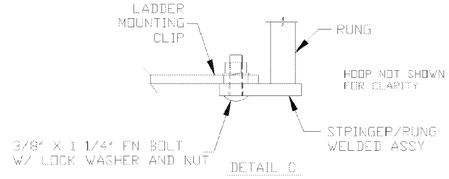

DETAIL C

ITEM	D/S	PART NO.	QTY	DESCRIPTION	EST. WT.	PAINT
1	B	LSB002	1	STRINGER/RUNG ASSEMBLY	82	
2	B	LCP4	4	LADDER MOUNTING CLIP	3	
3	B	70389020	2	LADDER MOUNTING CLIP	3	
4	B	HOOP1	1	HOOP - FLARED	14	
5	B	HOOP2	1	HOOP - MID	12	
6	B	CB012	7	CAGE BAR X 23 3/8" DAL	1	
7	-	BLTFG03751250	34	3/8" X 1 1/4" FN BOLT HDG		
8	-	NUTHG0375	34	3/8" NUT HEX		
9	-	WSHFG0375	23	3/8" FLAT WASHER HDG		
10	-	WSHLG0375	11	3/8" LOCK WASHER HDG		

ASSEMBLY NOTE:
INITIALLY ASSEMBLE UTILIZING LOOSE FIT CONNECTIONS. INSTALL AND ALIGN ALL PARTS BEFORE FULLY TIGHTENING HARDWARE.

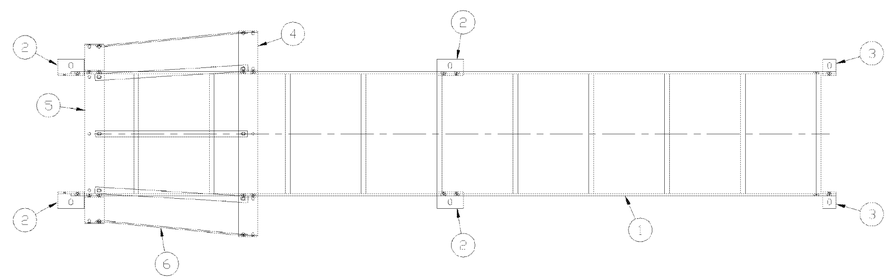

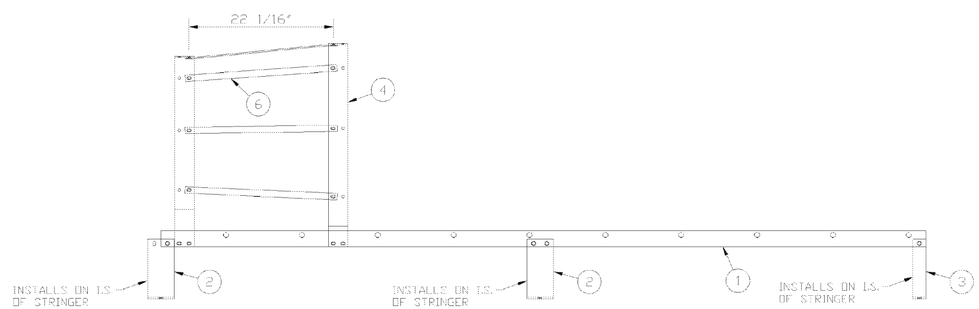

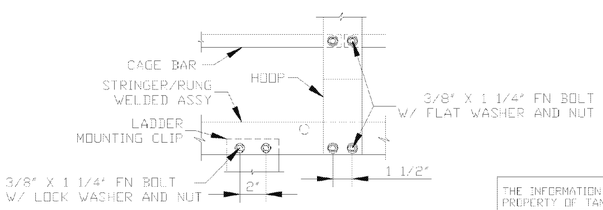

SIDE VIEW ASSEMBLY DETAIL

ASSEMBLY WEIGHT = 133 LBS

THE INFORMATION ON THIS DOCUMENT IS CONFIDENTIAL PROPERTY OF TANK MANUFACTURER AND/OR ITS AFFILIATES. ANY OTHER USE, RETENTION, DISSEMINATION, FORWARDING, PRINTING OR COPYING OF THIS DOCUMENT TO UNAUTHORIZED PARTIES IS STRICTLY PROHIBITED, WITHOUT THE EXPRESSED WRITTEN CONSENT OF TANK MANUFACTURER.

TANK CONNECTION
AFFILIATE GROUP
3609 North 16th St. · Parsons, Kansas 67357
620.421.7017 · FAX: 620.421.7689

REV	REVISION	DATE	BY	APP
E				
D				
C				
B	UPDATED BORDER	11/23/09	JA	DJC
A	BOTTOM CLIPS WERE LCP5	12/29/08	MC	DJC

DRAWN BY:	JT	STANDARD RING LADDER ASSY.			
DATE:	10/17/07				
REVIEWED BY:	BCR				
DATE:	10/20/07	C	SCALE: NTS	DRAWING NO.	LSA008

230,000 GAL. TANK STRUCTURAL SHOP DRAWING

SCALE: N.T.S.

quasar energy group
quasar energy group
7624 Riverview Road
PO Box 31023
Cleveland OH 44141
Phone: 216.986.9999

Scale: SEE DETAIL

This drawing contains valuable confidential and proprietary information that belongs to quasar energy group, llc ("quasar"), and is subject to a separate Confidentiality and Nondisclosure Agreement. quasar is the author and owner of this drawing, and retains all common law, statutory and other rights and privileges with respect hereto, including copyrights. The information contained herein may not at any time be used for any unauthorized purpose, nor reproduced by or provided to any third party, without the prior written consent of quasar.

STATE OF OHIO
ALAN R. JOHNSON
46333
REGISTERED
PROFESSIONAL ENGINEER

AS BUILT

Rev.	ECN Number	Date
2		
1		
0	AS BUILT	__/__/__

Drawing Name
230K GAL. BIOMASS EQUALIZATION TANK STRUCTURAL SHOP DRAWING

Project Name and Address:
0058-CAR-OH-11

RINGLER FARMS
ADS Facility
ecoFarmsystem 980

2277 County Road 156
Cardington, OH 43315-9742

Area: —
Author: BR
Calculated: —
Checked: RN
Sheet Number: S-21

© 2012, Quasar Energy Group, LLC. All rights reserved.

P:\SBE Projects\0058-CAR-OH-11 - Ringler Farms\BUILDING DRAWINGS\CURRENT DRAWINGS (AS BUILT)\RINGLER FARMS STRUCTURAL.dwg
11/15/2013 3:42 PM

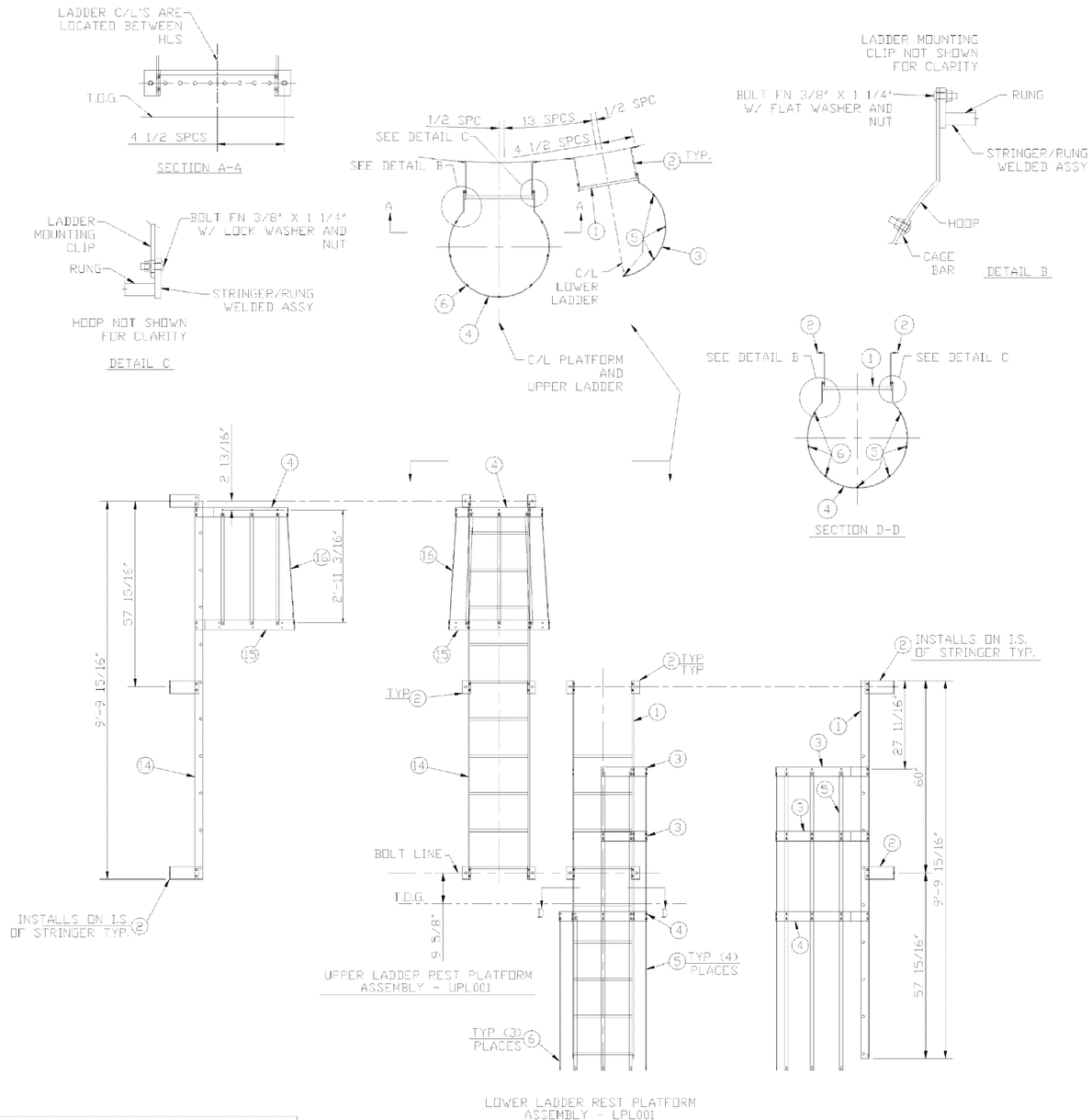

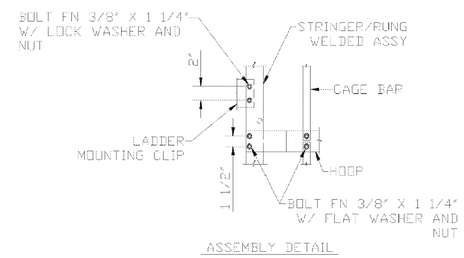

LOWER LADDER REST PLATFORM ASSEMBLY - LPL001

ITEM	D/S	PART NO.	QTY	DESCRIPTION	EST. WT.	PAINT
1	B	LSL001	1	STRINGER/RUNG ASSEMBLY 9'-9 15/16" O.A.L.	80	
2	B	LCP4	4	LADDER MOUNTING CLIP	3	
3	B	HOOP3	2	HOOP - REST PLATFORM	6	
4	B	HOOP2	1	HOOP - MID	12	
5	B	CB006	4	CAGE BAR X 92 15/16" OAL	5	
6	B	CB007	3	CAGE BAR X 47 7/8" OAL	2	
7	-	BLTFG03751250	68	3/8" x 1 1/4" FN BOLT HDG		
8	-	NUTHG0375	68	3/8" NUT HEX		
9	-	WSHFG0375	57	3/8" FLAT WASHER HDG		
10	-	WSHLG0375	11	3/8" LOCK WASHER HDG		

UPPER LADDER REST PLATFORM ASSEMBLY - UPL001

ITEM	D/S	PART NO.	QTY	DESCRIPTION	EST. WT.	PAINT
2	B	LCP4	6	LADDER MOUNTING CLIP	3	
4	B	HOOP2	1	HOOP - MID	12	
7	-	BLTFG03751250	34	3/8" X 1 1/4" FN BOLT HDG		
8	-	NUTHG0375	34	3/8" NUT HEX		
9	-	WSHFG0375	23	3/8" FLAT WASHER HDG		
10	-	WSHLG0375	11	3/8" LOCK WASHER HDG		
14	B	LSU001	1	STRINGER/RUNG ASSEMBLY 9'-9 15/16" O.A.L.	82	
15	B	HOOP1	1	HOOP - FLARED	14	
16	B	CB004	7	CAGE BAR X 35" OAL	1	

ASSEMBLY WEIGHT: 275#

ASSEMBLY NOTE:
INITIALLY ASSEMBLE UTILIZING LOOSE FIT CONNECTIONS. INSTALL AND ALIGN ALL PARTS BEFORE FULLY TIGHTENING HARDWARE.

ALL CONNECTIONS - USE 3/8" X 1 1/4" FN BOLT W/ LOCK WASHER AND NUT (UNLESS NOTED)

THE INFORMATION ON THIS DOCUMENT IS CONFIDENTIAL PROPERTY OF TANK MANUFACTURER AND/OR ITS AFFILIATES. ANY OTHER USE, RETENTION, DISSEMINATION, FORWARDING, PRINTING OR COPYING OF THIS DOCUMENT TO UNAUTHORIZED PARTIES IS STRICTLY PROHIBITED, WITHOUT THE EXPRESSED WRITTEN CONSENT OF TANK MANUFACTURER.

TANK CONNECTION
AFFILIATE GROUP
3609 North 167th St. · Parsons, Kansas 67357
620.423.3018 · fax: 620.423.5299

REV	REVISION	DATE	BY	APP
E				
D				
C				
B				
A	REVISED BORDER	7/09/10	DJC	

DRAWN BY:	JT	UPPER & LOWER LADDER REST PLATFORM ASS'Y LH	
DATE:	11/06/07		
REVIEWED BY:	BCR		
DATE:	11/06/07	SCALE: NTS	DRAWING NO. LSA011

230,000 GAL. TANK STRUCTURAL SHOP DRAWING

SCALE: N.T.S.

quasar energy group
quasar energy group
7624 Riverview Road
PO Box 31023
Cleveland OH 44141
Phone: 216.986.9999

Scale: SEE DETAIL

This drawing contains valuable confidential and proprietary information that belongs to quasar energy group, llc ("quasar"), and is subject to a separate Confidentiality and Nondisclosure Agreement. quasar is the author and owner of this drawing, and retains all common law, statutory and other rights and privileges with respect hereto, including copyrights. The information contained herein may not at any time be used for any unauthorized purpose, nor reproduced by or provided to any third party, without the prior written consent of quasar.

STATE OF OHIO
ALAN R. JOHNSON
46333
REGISTERED
PROFESSIONAL ENGINEER

AS BUILT

Rev.	ECN Number	Date
2		
1		
0	AS BUILT	__/__/__

Drawing Name:
230K GAL. BIOMASS EQUALIZATION TANK STRUCTURAL SHOP DRAWING

Project Name and Address:
0058-CAR-OH-11

RINGLER FARMS
ADS Facility
ecoFarmsystem 980

2277 County Road 156
Cardington, OH 43315-9742

Area: _
Author: BR
Calculated: _
Checked: RN
Sheet Number: S-22

P:\SBE Projects\0058-CAR-OH-11 - Ringler Farms\BUILDING DRAWINGS\CURRENT DRAWINGS (AS BUILT)\RINGLER FARMS STRUCTURAL.dwg
11/15/2013 3:42 PM

© 2012, Quasar Energy Group, LLC. All rights reserved.

ALL CONNECTIONS - USE 3/8" X 1 1/4" FN BOLT W/ LOCK WASHER AND NUT (UNLESS NOTED)

ASSEMBLY NOTE:
INITIALLY ASSEMBLE UTILIZING LOOSE FIT CONNECTIONS. INSTALL AND ALIGN ALL PARTS BEFORE FULLY TIGHTENING HARDWARE.

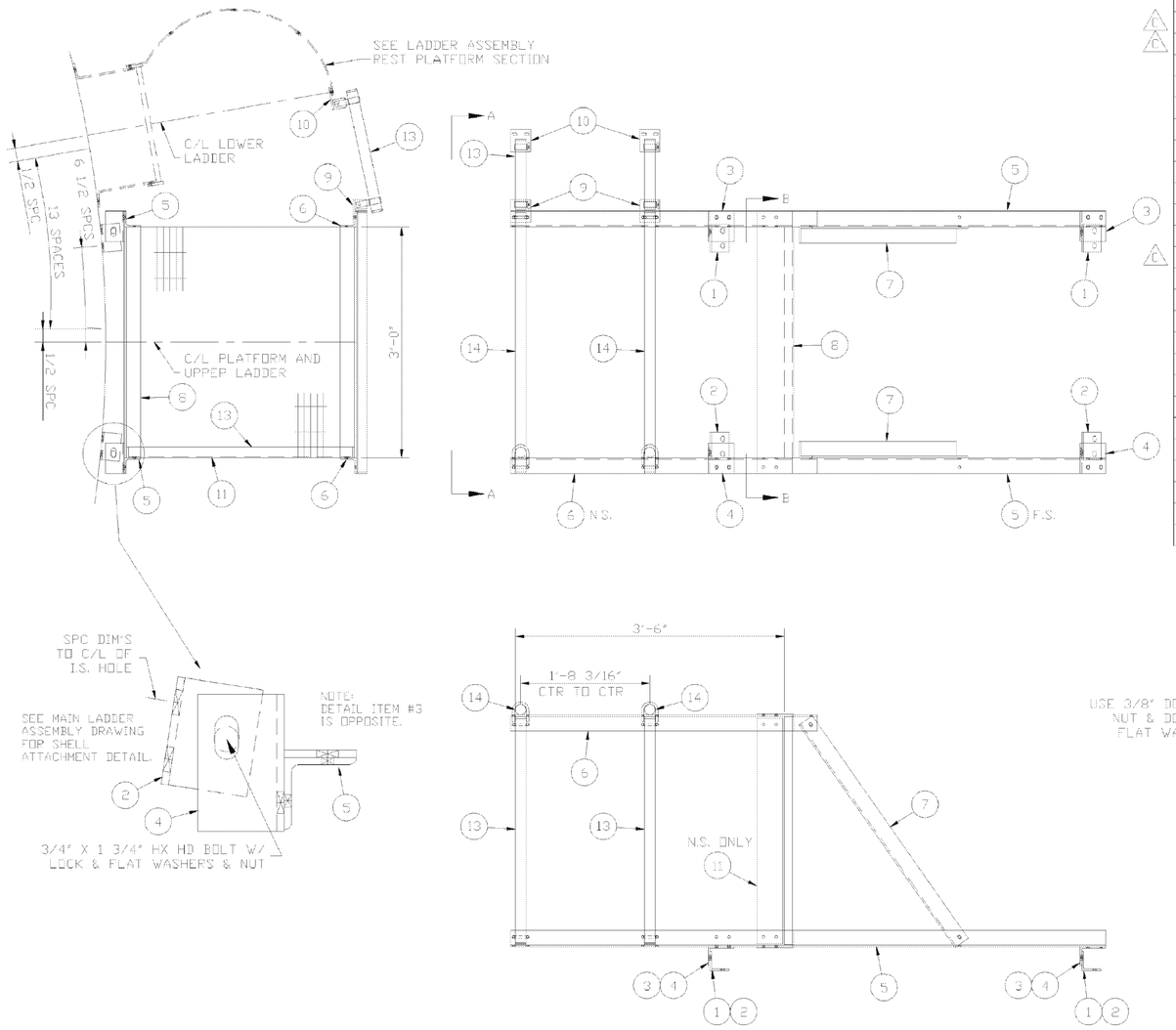

ITEM	D/S	PART NO.	QTY	DESCRIPTION	EST. WT.	PAINT
1	B	PC001	2	MOUNTING ANGLE - SHELL	2	
2	B	PC002	2	MOUNTING ANGLE - SHELL	2	
3	B	LRR12	2	MOUNTING ANGLE RH - PLATFORM	3	
4	B	LRR13	2	MOUNTING ANGLE LH - PLATFORM	3	
5	B	PP001	2	PLATFORM POST - L2 1/2 X 2 1/2 X 1/4	28	
6	B	PP002	2	GUARDRAIL POST - L2 1/2 X 2 1/2 X 1/4	16	
7	B	LRR16	2	KNEE BRACE - L2 1/2 X 2 1/2 X 1/4	15	
8	B	LRR17	1	PLATFORM FRAME	116	
9	B	LRR18	2	GUARDRAIL CLIP - A	1	
10	B	LRR19	2	GUARDRAIL CLIP - B	1	
11	B	TB1331	1	TOE BOARD 1/8PL X 4' X 34 5/8" DAL	5	
12	B	CB005	4	CAGE BAR X 43 15/16"	3	
13	-	GP001	4	PIPE 1.66" O.D. X 0.072" WALL X 35" GALV	1	
14	-	GP002	2	PIPE 1.66" O.D. X 0.072" WALL X 40 1/2" GALV	1	
15	-	CCF158	12	PIPE CAP, BLACK PLASTIC 1 5/8" O.D.		
16	-	BLTFG03751250	50	3/8" x 1 1/4" FN BOLT HDG		
17	-	NUTHG0375	72	3/8" NUT HEX		
18	-	WSHFG0375	38	3/8" FLAT WASHER HDG		
19	-	WSHLG0375	44	3/8" LOCK WASHER HDG		
20	-	BLTHG0750175	4	3/4" X 1 3/4" HX HD BOLT HDG A325		
21	-	NUTHG0750	4	3/4" NUT HEX		
22	-	WSHFG0750	4	3/4" FLAT WASHER HDG		
23	-	WSHLG0750	4	3/4" LOCK WASHER HDG		
24	-	CP050082141	8	HANDRAIL CLAMP MODEL CL-TBB-15		
25	-	BLTCG031251250	10	5/16" X 1 1/4" CARRIAGE BOLT GALV		
26	-	WSHFG03125	10	5/16" WASHER FLAT GALV		
27	-	WSHLG03125	10	5/16" WASHER LOCK GALV		
28	-	NUTHG03125	10	5/16" HEX NUT HDG		
29	-	UBPG1250	11	U-BOLT 1 1/4" HDG		
30	-	CHNZ0312530	2	CHAIN SAFETY 5/16" X 30" LG ZINC PLTD	5	N
31	-	MC3016T33	4	EYE BOLT 3/8"x3"LGx3/4"DIA EYE w/DBL NUTS		N
32	-	CHREPLNKZ031251500	2	CHAIN REPAIR LINK 1 1/2" ZINC PLTD		N
33	-	MC3933T18	2	SPRING SNAP 5/8" OPENING 7/16" DIA.		N

ASSY. WEIGHT= 295#

SHEET 1 OF 2
SEE SHEET 2 FOR ASSEMBLY DETAILS

THE INFORMATION ON THIS DOCUMENT IS CONFIDENTIAL PROPERTY OF TANK MANUFACTURER AND/OR ITS AFFILIATES. ANY OTHER USE, RETENTION, DISSEMINATION, FORWARDING, PRINTING OR COPYING OF THIS DOCUMENT TO UNAUTHORIZED PARTIES IS STRICTLY PROHIBITED, WITHOUT THE EXPRESSED WRITTEN CONSENT OF TANK MANUFACTURER.

TANK CONNECTION
AFFILIATE GROUP
3609 NORTH 16TH ST PARSONS, KANSAS 67357
620.421.3010 FAX: 620.421.3999

REV	REVISION	DATE	BY	APP
E				
D	ADDED SECT.A-A / MOVED SECT.B-B	9/19/11	SGM	MP
C	REVISED PART NUMBERS	10/21/10	TM	SH
B	ADDED SAFETY CHAIN TO PLATFORM	12/04/09	JK	SH
A	REVISED BORDER	11/23/09	JA	DJC

DRAWN BY:	JT	REST PLATFORM ASSEMBLY - LH			
DATE:	11/16/07				
REVIEWED BY:	DJC				
DATE:	11/1/07	C	SCALE: NTS	DRAWING NO.	LHA001

230,000 GAL. TANK STRUCTURAL SHOP DRAWING

SCALE: N.T.S.

quasar energy group
quasar energy group
7624 Riverview Road
PO Box 31023
Cleveland OH 44141
Phone: 216.986.9999

Scale: SEE DETAIL

This drawing contains valuable confidential and proprietary information that belongs to quasar energy group, llc ("quasar"), and is subject to a separate Confidentiality and Nondisclosure Agreement. quasar is the author and owner of this drawing, and retains all common law, statutory and other rights and privileges with respect hereto, including copyrights. The information contained herein may not at any time be used for any unauthorized purpose, nor reproduced by or provided to any third party, without the prior written consent of quasar.

STATE OF OHIO
ALAN R. JOHNSON
46333
REGISTERED
PROFESSIONAL ENGINEER

AS BUILT

Rev.	ECN Number	Date
2		
1		
0	AS BUILT	__/__/__

Drawing Name:
230K GAL. BIOMASS EQUALIZATION TANK STRUCTURAL SHOP DRAWING

Project Name and Address:
0058-CAR-OH-11

RINGLER FARMS
ADS Facility
ecoFarmsystem 980

2277 County Road 156
Cardington, OH 43315-9742

Area: __
Author: BR
Calcurated: __
Checked: RN
Sheet Number: S-23

© 2012, Quasar Energy Group, LLC. All rights reserved.

P:\SBE Projects\0058-CAR-OH-11 - Ringler Farms\BUILDING DRAWINGS\CURRENT DRAWINGS (AS BUILT)\RINGLER FARMS STRUCTURAL.dwg
11/15/2013 3:42 PM

ALL CONNECTIONS - USE 3/8" X 1 1/4" FN BOLT W/ LOCK WASHER AND NUT (UNLESS NOTED)

ASSEMBLY NOTE:
INITIALLY ASSEMBLE UTILIZING LOOSE FIT CONNECTIONS. INSTALL AND ALIGN ALL PARTS BEFORE FULLY TIGHTENING HARDWARE.

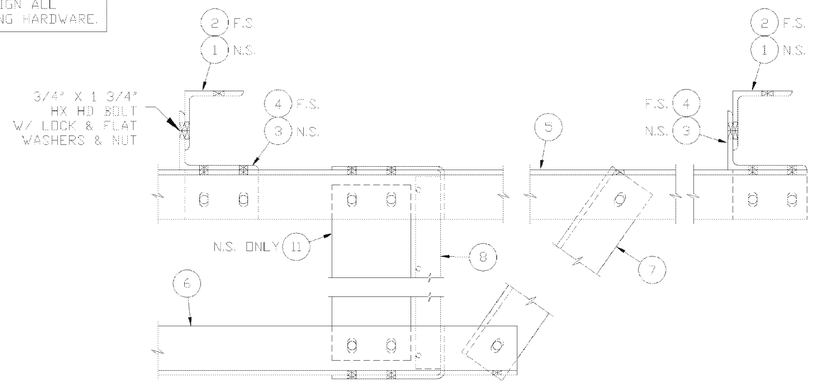

SIDE VIEW
PLATFORM ASSEMBLY DETAIL

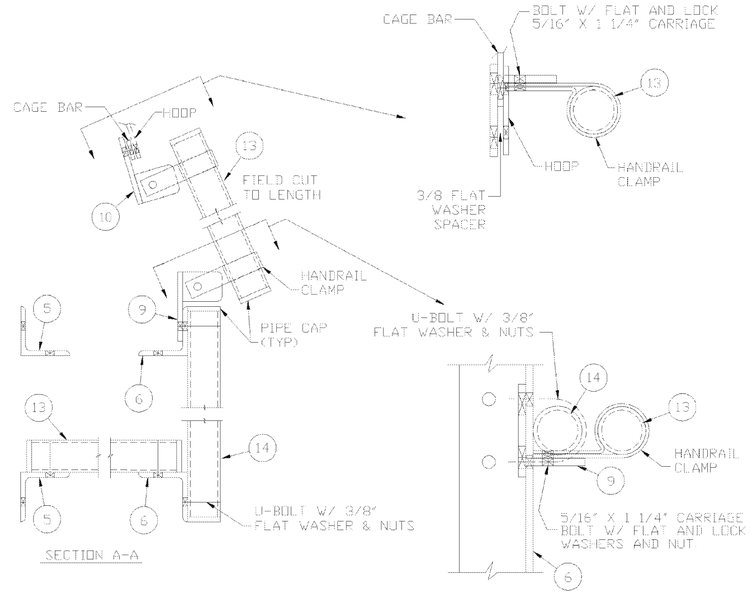

SECTION A-A

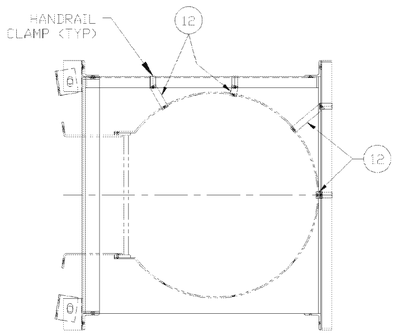

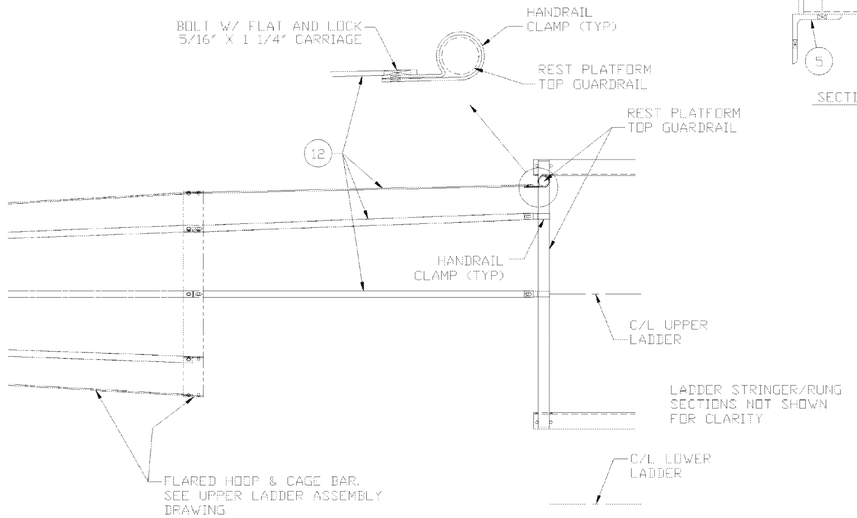

CAGE BAR TO REST PLATFORM DETAIL

ASSY. WEIGHT= 295#

SHEET 2 OF 2
SEE SHEET 1 FOR PART NUMBERS

THE INFORMATION ON THIS DOCUMENT IS CONFIDENTIAL PROPERTY OF TANK MANUFACTURER AND/OR ITS AFFILIATES. ANY OTHER USE, RETENTION, DISSEMINATION, FORWARDING, PRINTING OR COPYING OF THIS DOCUMENT TO UNAUTHORIZED PARTIES IS STRICTLY PROHIBITED, WITHOUT THE EXPRESSED WRITTEN CONSENT OF TANK MANUFACTURER.

TANK CONNECTION
AFFILIATE GROUP
3609 NORTH 16TH ST. · PARSONS, KANSAS 67357
620.421.5110 · FAX: 620.421.5220

REV	REVISION	DATE	BY	APP
E				
D				
C	GENERAL REVISIONS	9/19/11	SGM	MP
B	CHANGED DESCRIPTION TO LH ASSY	9/2/11	SGM	
A	REVISED BORDER	11/23/09	JA	DJC

DRAWN BY:	JT	REST PLATFORM ASSEMBLY - LH			
DATE:	11/6/07				
REVIEWED BY:	DJC				
DATE:	11/1/07	C	SCALE: NTS	DRAWING NO.	LHA001SHT2

230,000 GAL. TANK STRUCTURAL SHOP DRAWING
SCALE: N.T.S.

quasar energy group
quasar energy group
7624 Riverview Road
PO Box 31023
Cleveland OH 44141
Phone: 216.986.9999

Scale: SEE DETAIL

This drawing contains valuable confidential and proprietary information that belongs to quasar energy group, llc ("quasar"), and is subject to a separate Confidentiality and Nondisclosure Agreement. quasar is the author and owner of this drawing, and retains all common law, statutory and other rights and privileges with respect hereto, including copyrights. The information contained herein may not at any time be used for any unauthorized purpose, nor reproduced by or provided to any third party, without the prior written consent of quasar.

STATE OF OHIO
ALAN R. JOHNSON
46333
REGISTERED
PROFESSIONAL ENGINEER

AS BUILT

Rev.	ECN Number	Date
2		
1		
0	AS BUILT	__/__/__

Drawing Name
230K GAL. BIOMASS EQUALIZATION TANK STRUCTURAL SHOP DRAWING

Project Name and Address:
0058-CAR-OH-11

RINGLER FARMS
ADS Facility
ecoFarmsystem 980

2277 County Road 156
Cardington, OH 43315-9742

Area: —
Author: BR
Calculated: —
Checked: RN
Sheet Number: S-24

© 2012, Quasar Energy Group, LLC. All rights reserved.

P:\SBE Projects\0058-CAR-OH-11 - Ringler Farms\BUILDING DRAWINGS\CURRENT DRAWINGS (AS BUILT)\RINGLER FARMS STRUCTURAL.dwg
11/15/2013 3:41 PM

ITEM	D/S	PART NO.	QTY	DESCRIPTION	EST. WT.	PAINT
1	B	DOOR1	1	DOOR LADDER ASSEMBLY ALUM.	6	
2	B	DOOR LK 7	1	CLIP, LOCKING DOOR HASP ALUM.	1	
3	B	DOOR LK 6	2	CLIP, LOCKING HOOP HINGE ALUM.	1	
4	-	BLTHG03751250	10	3/8" X 1 1/4" LG HEX HD BOLT		HDG
5	-	WSHFG0375	10	3/8" FLAT WASHER		HDG
6	-	NUTHG0375	10	3/8" HEX NUT		HDG

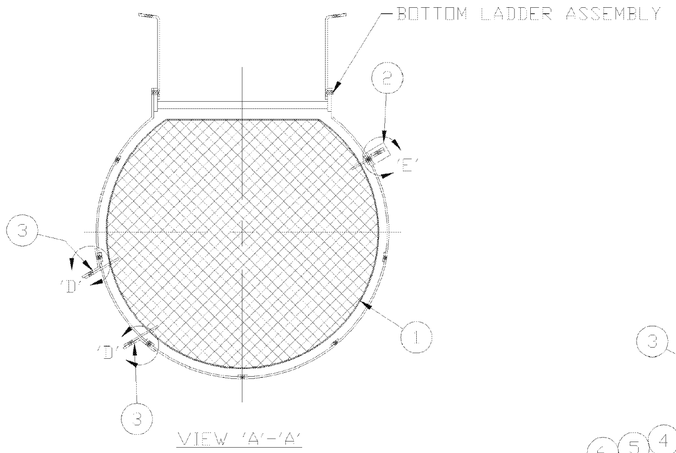

VIEW 'A'-'A'

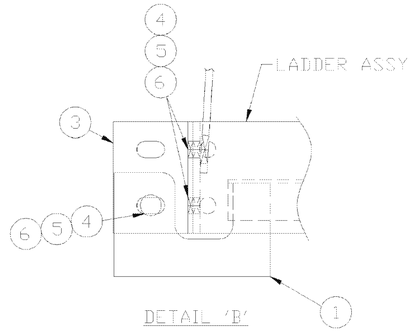

DETAIL 'B'

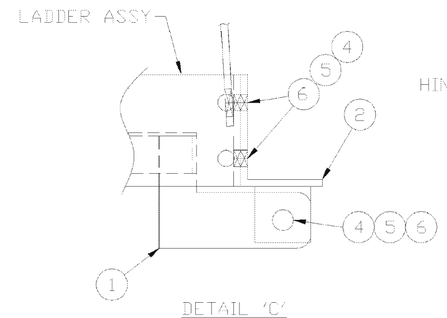

DETAIL 'C'

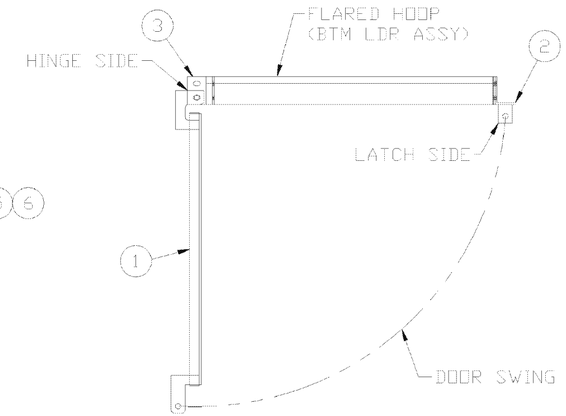

ASSEMBLY SWING ACTION

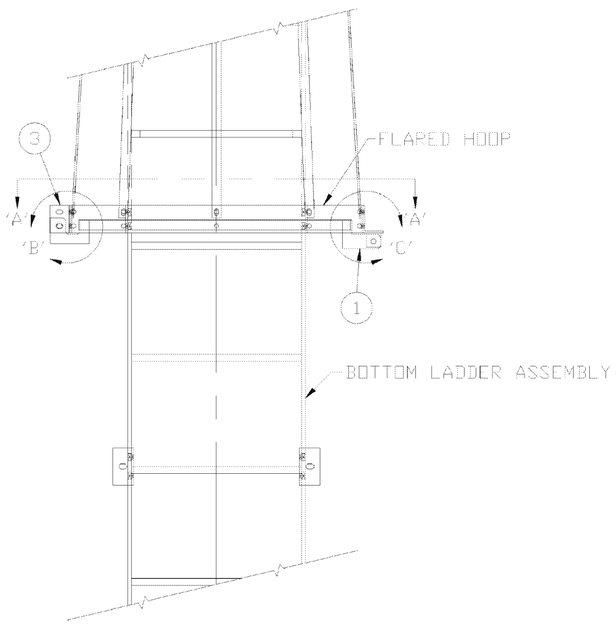

FRONT ASSEMBLY VIEW

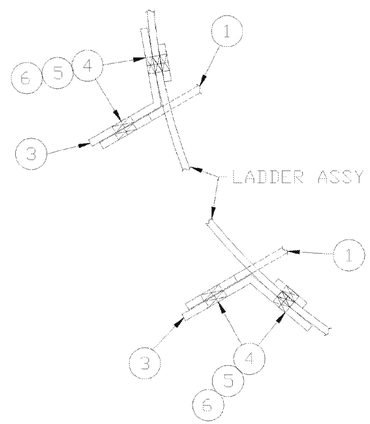

DETAIL 'D'

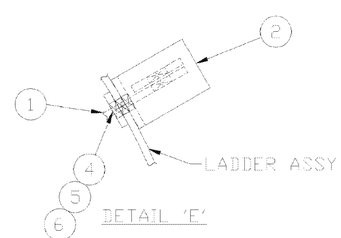

DETAIL 'E'

ASSY WT: 9#

THE INFORMATION ON THIS DOCUMENT IS CONFIDENTIAL PROPERTY OF TANK MANUFACTURER AND/OR ITS AFFILIATES. ANY OTHER USE, RETENTION, DISSEMINATION, FORWARDING, PRINTING OR COPYING OF THIS DOCUMENT TO UNAUTHORIZED PARTIES IS STRICTLY PROHIBITED, WITHOUT THE EXPRESSED WRITTEN CONSENT OF TANK MANUFACTURER

TANK CONNECTION
AFFILIATE GROUP
3609 NORTH 16TH ST. · PARSONS, KANSAS 67357
620.421.3010 · FAX: 620.421.3699

REV	REVISION	DATE	BY	APP
E				
D				
C				
B				
A	REVISED BORDER	7/06/11	DJC	JM

DRAWN BY:	AM	LADDER LOCKABLE DOOR ASSEMBLY FOR BTM SECTION		
DATE:	9/07/06			
REVIEWED BY:	SHEDD			
DATE:	9/07/06	SCALE: NTS	DRAWING NO.	LKDRASSY

230,000 GAL. TANK STRUCTURAL SHOP DRAWING

SCALE: N.T.S.

quasar energy group
quasar energy group
7624 Riverview Road
PO Box 31023
Cleveland OH 44141
Phone: 216.986.9999

Scale: SEE DETAIL

This drawing contains valuable confidential and proprietary information that belongs to quasar energy group, llc ("quasar"), and is subject to a separate Confidentiality and Nondisclosure Agreement. quasar is the author and owner of this drawing, and retains all common law, statutory and other rights and privileges with respect hereto, including copyrights. The information contained herein may not at any time be used for any unauthorized purpose, nor reproduced by or provided to any third party, without the prior written consent of quasar.

STATE OF OHIO
ALAN R. JOHNSON
46333
REGISTERED
PROFESSIONAL ENGINEER

AS BUILT

Rev.	ECN Number	Date
2		
1		
0	AS BUILT	__/__/__

Drawing Name:
230K GAL. BIOMASS EQUALIZATION TANK STRUCTURAL SHOP DRAWING

Project Name and Address:
0058-CAR-OH-11

RINGLER FARMS
ADS Facility
ecoFarmsystem 980

2277 County Road 156
Cardington, OH 43315-9742

Area: —
Author: BR
Calculated: —
Checked: RN
Sheet Number: S-25

P:\SBE Projects\0058-CAR-OH-11 - Ringler Farms\BUILDING DRAWINGS\CURRENT DRAWINGS (AS BUILT)\RINGLER FARMS STRUCTURAL.dwg
11/15/2013 3:41 PM

© 2012, Quasar Energy Group, LLC. All rights reserved.

ITEM	D/S	PART NO.	QTY	DESCRIPTION	EST. WT.	PAINT
63	B	DFC1500800	2	1/2"PL DRILLING FLANGE 8" 150# PUNCHING	12	E
64						
65	B	NGDF0600	1	GASKET 6" 150# PUNCHING NITRILE		N
66	B	BFC1500600	1	1/2"PL BLIND FLANGE 6" 150# PUNCHING	13	E
67	-	BLTHGO7502750	9	3/4" X 2 3/4" HX HD BOLT HDG A325		N
68	B	2340002002	1	TOP PANEL 3/16"PL 1RV. A304 S.S. W/NOZL. PCHG.	364	N
69	B	475001113	1	TOP PANEL 3/16"PL 1RV A304 S.S. W/NOZL. PCHG.	364	N
70	B	2340002001	1	MID PANEL 5/16"PL 3RV. GR.50 W/NOZL. PCHG.	624	I/E
71	B	2643001001	1	MID PANEL 5/16"PL 3RV GR.50 W/NOZL. PCHG.	624	I/E

(ROLL ALL PANELS TO 59'-5" DIA.)
ASSY. WT.= 76,614#

ITEM	D/S	PART NO.	QTY	DESCRIPTION	EST. WT.	PAINT
1	B	1226001001	1	MID PANEL 5/16"PL 3RV. GR.50 W/STAIR PCHG.	632	I/E
2	B	1226001002	1	MID PANEL 5/16"PL 3RV. GR.50 W/STAIR PCHG.	632	I/E
3	B	1226001003	1	MID PANEL 5/16"PL 3RV. GR.50 W/NOZL. PCHG.	628	I/E
4	B	1708002001	1	MID PANEL 5/16"PL 3RV. GR.50 W/MIXER & NOZL. PCHG.	573	I/E
5	B	1226001005	1	MID PANEL 5/16"PL 3RV. GR.50 W/NOZL. PCHG.	624	I/E
6	B	1226001006	1	MID PANEL 5/16"PL 3RV. GR.50 W/CLEANOUT PCHG.	485	I/E
7	B	1226001007	1	MID PANEL 1/4"PL 3RV. GR.50 W/STAIR PCHG.	506	I/E
8	B	1708002002	1	MID PANEL 5/16"PL 3RV. GR.50 W/MIXER & NOZL. PCHG	573	I/E
9	B	1226001009	1	MID PANEL 1/4"PL 2RV. GR.50 W/STAIR PCHG.	496	I/E
10	B	1226001010	1	MID PANEL 1/4"PL 2RV. GR.50 W/STAIR PCHG.	496	I/E
11	B	475001005	2	MID PANEL 1/4"PL 2RV. GR.50 W/MNWY-MIXER PCHG.	449	I/E
12	B	1226001011	1	MID PANEL 1/4"PL 2RV. GR.50 W/STAIR PCHG.	496	I/E
13	B	1226001012	1	MID PANEL 1/4"PL 2RV. GR.50 W/STAIR PCHG.	496	I/E
14	B	1226001013	1	MID PANEL 1/4"PL 2RV. GR.50 W/STAIR PCHG.	496	I/E
15	B	1226001014	1	MID PANEL 3/16"PL 2RV. GR.36 W/STAIR PCHG	372	I/E
16	B	1226001015	1	MID PANEL 3/16"PL 2RV. GR.36 W/STAIR PCHG.	372	I/E
17	B	1226001016	1	MID PANEL 3/16"PL 1RV. GR.36 W/MIXER PCHG.	329	I/E
18	B	1708002003	1	MID PANEL 1/4"PL 3RV. GR.50 W/NOZL. PCHG.	506	I/E
19	B	1226001018	1	MID PANEL 3/16"PL 1RV. GR.36 W/STAIR PCHG.	364	I/E
20	B	1226001019	1	MID PANEL 3/16"PL 1RV. GR.36 W/STAIR PCHG.	364	I/E
21	B	1708002004	1	MID PANEL 3/16"PL 2RV. GR.36 W/STAIR PCHG.	372	I/E
22	B	1708002005	1	MID PANEL 3/16"PL 2RV. GR.36 W/STAIR PCHG.	372	I/E
23	B	1708002006	1	MID PANEL 3/16"PL 1RV. GR.36 W/STAIR PCHG	364	I/E
24	B	1708002007	1	MID PANEL 3/16"PL 1RV. GR.36 W/STAIR PCHG	364	I/E
25	B	1708002008	1	TOP PANEL 3/16"PL 1RV. A304 S.S. W/NOZL. PCHG.	364	N
26	B	923001016	1	TOP PANEL 3/16"PL 1RV. A304 S.S. W/NOZL. PCHG.	364	N
27	B	923001010	1	TOP PANEL 3/16"PL 1RV. A304 S.S. W/NOZL. PCHG.	364	N
28	B	BP5258321320	11	MID PANEL 5/16"PL 3RV. GR.50 PLAIN	632	I/E
29	B	BP4458311320	18	MID PANEL 1/4"PL 3RV. GR.70 PLAIN	506	I/E
30	B	BP4258211320	53	MID PANEL 1/4"PL 2RV. GR.50 PLAIN	496	I/E
31	B	BP3058211320	16	MID PANEL 3/16"PL 2RV. GR.36 PLAIN	372	I/E
32	B	BP3058111320	15	MID PANEL 3/16"PL 1RV. GR.36 PLAIN	364	I/E
33	B	923001017	15	TOP PANEL 3/16"PL 1RV. A304 S.S. PLAIN	364	N
34	B	1226001027	1	3/8"PL FLUSH CLEANOUT COVER	280	I/E
35	B	1226001025	1	24" MANWAY 3 R.V. 3/8" REPAD 3/8" BOLT FLNG.	198	I/E
36	B	MWC50024	1	MANWAY COVER 1/2"PL 24" DIA	126	I/E
37	B	MWGSKTN2426	5	MANWAY GASKET 24" NITRILE		N
38	B	1226001026	1	MIXER MOUNT NOZL. 3R.V. 3/8" REPAD 3/8" BOLT FLNG.	196	I/E
39	B	1708002009	3	MIXER MOUNT NOZL. 2R.V. 1/4" REPAD 3/8" BOLT FLNG.	166	I/E
40	B	1226001041	4	MIXER MOUNT COVER 1/2"PL	104	I/E
41	-	BLTHG05008500	1	1/2" X 8 1/2" HX HD BOLT HDG GR.5		N
42	-	WSHFG0500	3	1/2" FLAT WASHER HDG		N
43	-	NUTHG0500	3	1/2" HEX NUT HDG		N
44	-	BLTHG07502250	152	3/4" X 2 1/4" HX HD BOLT HDG A325		N
45	-	BLTHG07502500	4	3/4" X 2 1/2" HX HD BOLT HDG A325		N
46	-	WSHFG0750	183	3/4" FLAT WASHER HDG F436		N
47	-	NUTHG0750	183	3/4" HEX NUT HDG A325		N
48	-	BLTHG07503250	18	3/4" X 3 1/4" HX HD BOLT HDG A325		N
49	A	NMPLT2493002	1	NAMEPLATE		N
50	B	BNR1500610	8	6" 150# RFSO FLANGE NOZZLE 10" PROJ.	39	I/E
51	B	BNR15006	8	6" 150# RFSO FLANGE NOZZLE	33	I
52	B	BNR1500107	1	1" 150# RFSO FLANGE NOZZLE 7" PROJ.	6	I/E
53	B	CPFS1000	1	BOLT ON 1" FULL COUPLING 3000# S.S.	4	I/E
54	B	BNR1500107SS	1	1" 150# RFSO FLANGE NOZZLE 7" PROJ. S.S.	6	N
55	B	BNR1500610SS	3	6" 150# RFSO FLANGE NOZZLE 10" PROJ. S.S.	39	N
56	B	475001115	1	1/4"PL SPOOL PLATE WITH 1" NIPPLE S.S.	3	N
57	B	475001116	2	8" 150# FFSO FLANGE NOZZLE 10" PROJ. S.S.	59	N
58	B	475001117	1	8" 150# RFSO FLANGE NOZZLE 10" PROJ. S.S.	58	N
59	B	BNR15008SS	1	8" 150# RFSO FLANGE NOZZLE S.S.	48	N
60	B	BNR15006SS	3	6" 150# RFSO FLANGE NOZZLE S.S.	33	N
61	B	NGDF0800	4	GASKET 8" 150# PUNCHING NITRILE		N
62	B	923001019	2	WINDOW 8" 150# PUNCHING LEXAN	1	N

ACCESSORY ORIENTATION CHART

CUSTOMER ITEM	ITEM	SERVICE	SIZE	RADIUS	REF DEGREE	ELEV. FROM BTM. OF TANK STEEL TO CTR OF ACCESSORY UNLESS NOTED OTHERWISE
1	35/36	SHELL MANWAY W/HINGE	24"	SHELL	351	2'-9"
2	38/40D	AGITATOR	24"	SHELL	315	2'-9"
3	50A/51A	DBL. NOZL.-SLUDGE OUTLET	6"	SHELL	149	2'-9"
4	50B/51B	DBL. NOZL.-SLUDGE OUTLET	6"	SHELL	157.5	2'-9"
5	53	FULL CPLG.-TEMP. SENSOR	1"	SHELL	323	7'-7"
6	50F/51F	DBL. NOZL.-SLUDGE INLET	6"	SHELL	179.5	2'-9"
7	50G/51G	DBL. NOZL.-SLUDGE INLET	6"	SHELL	171	2'-9"
8	50D/51D	DBL. NOZL.-DRAIN SPARE	6"	SHELL	0	1'-4 1/2"
9	34	FLUSH CLEANOUT	36" x 46"	SHELL	9	SEE DETAIL
10	39A/40A	AGITATOR	24"	SHELL	135	22'-1"
11	57A	NOZL.-VIEWING PORT	8"	SHELL	351	37'-9 1/2"
12	57B	NOZL.-VIEWING PORT	8"	SHELL	358.5	37'-9 1/2"
13	56	NPT NIPPLE-ANTI-FOAM	1"	SHELL	346.5	37'-9 1/2"
14	39B/40B	AGITATOR	24"	SHELL	225	12'-5"
15	50C/51C	DBL. NOZL.-SLUDGE OUTLET	6"	SHELL	189	2'-9"
18	54	INST. NOZL.-LVL. SENSOR	1"	SHELL	323	36'-10
19	50K/51K	DBL. NOZL.-SLUDGE INLET	6"	SHELL	205	2'-9"
20	58/59	DBL. NOZL.-GAS LINE PRV	8"	SHELL	9	37'-9 1/2"
21	55A/60A	DBL. NOZL.-GAS LINE	6"	SHELL	243	37'-9 1/2"
22	55B/60B	DBL. NOZL.-GAS LINE	6"	SHELL	248	37'-9 1/2"
23	52	INST. NOZL.-PRES. SENSOR	1"	SHELL	323	2'-4"
24	50H/51H	DBL. NOZL.-SLUDGE OUTLET	6"	SHELL	210	2'-9"
25	55C/60C	DBL. NOZL.-GAS LINE	6"	SHELL	99	37'-9 1/2"
26	39C/40C	AGITATOR	24"	SHELL	45	31'-9"

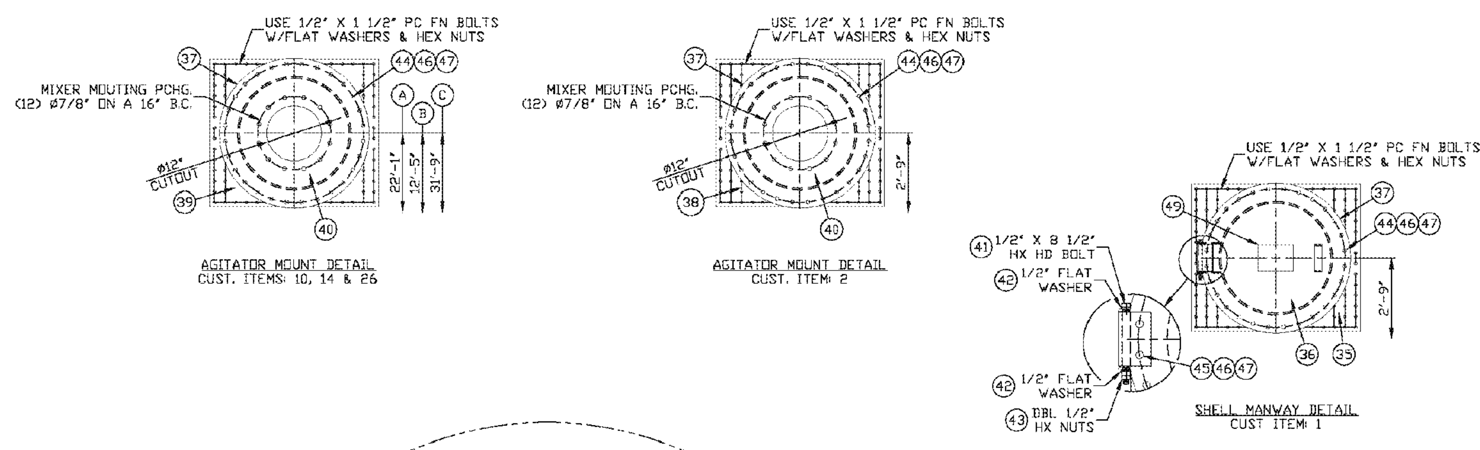

AGITATOR MOUNT DETAIL
CUST. ITEMS: 10, 14 & 26

AGITATOR MOUNT DETAIL
CUST. ITEM: 2

SHELL MANWAY DETAIL
CUST ITEM: 1

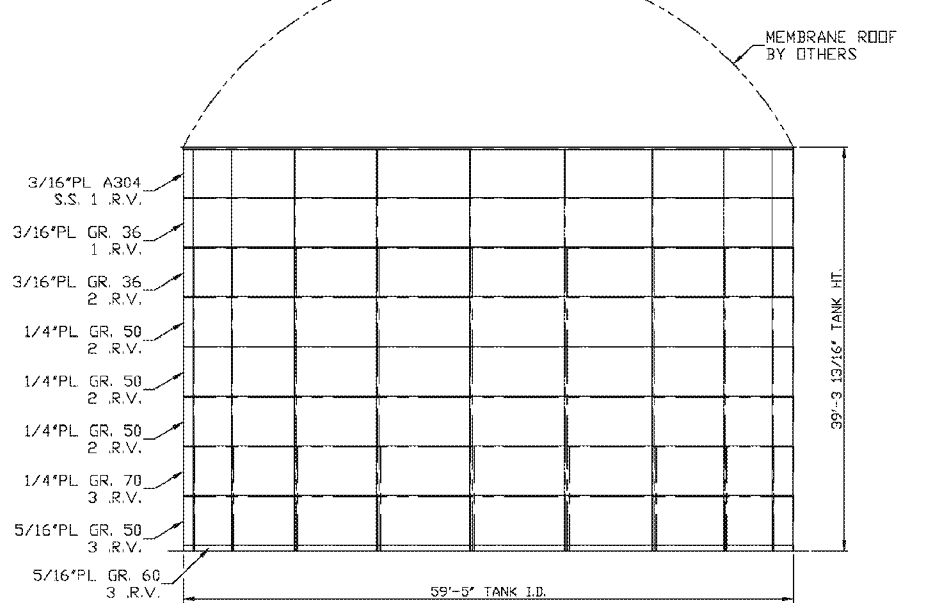

ELEVATION VIEW

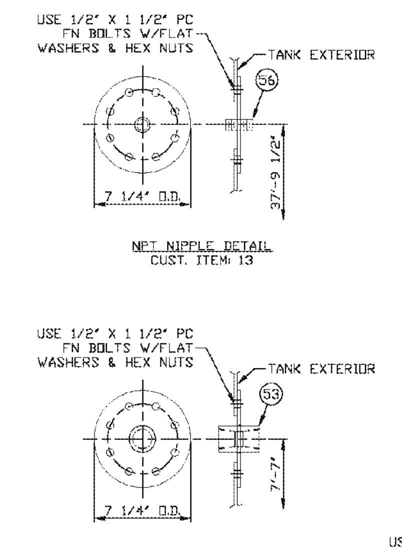

NPT NIPPLE DETAIL
CUST. ITEM: 13

FULL COUPLING DETAIL
CUST. ITEM: 5

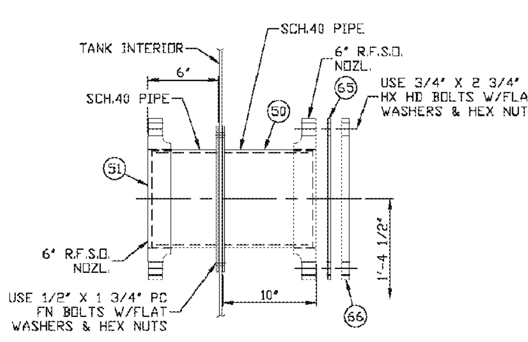

150# R.F.S.O. DRAIN SPARE DETAIL
CUST. ITEM: 8

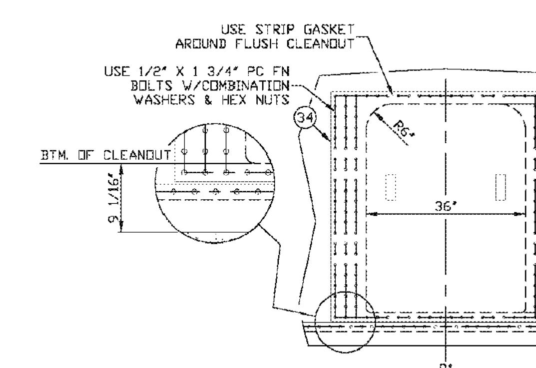

FLUSH CLEANOUT DETAIL
CUST. ITEM: 9

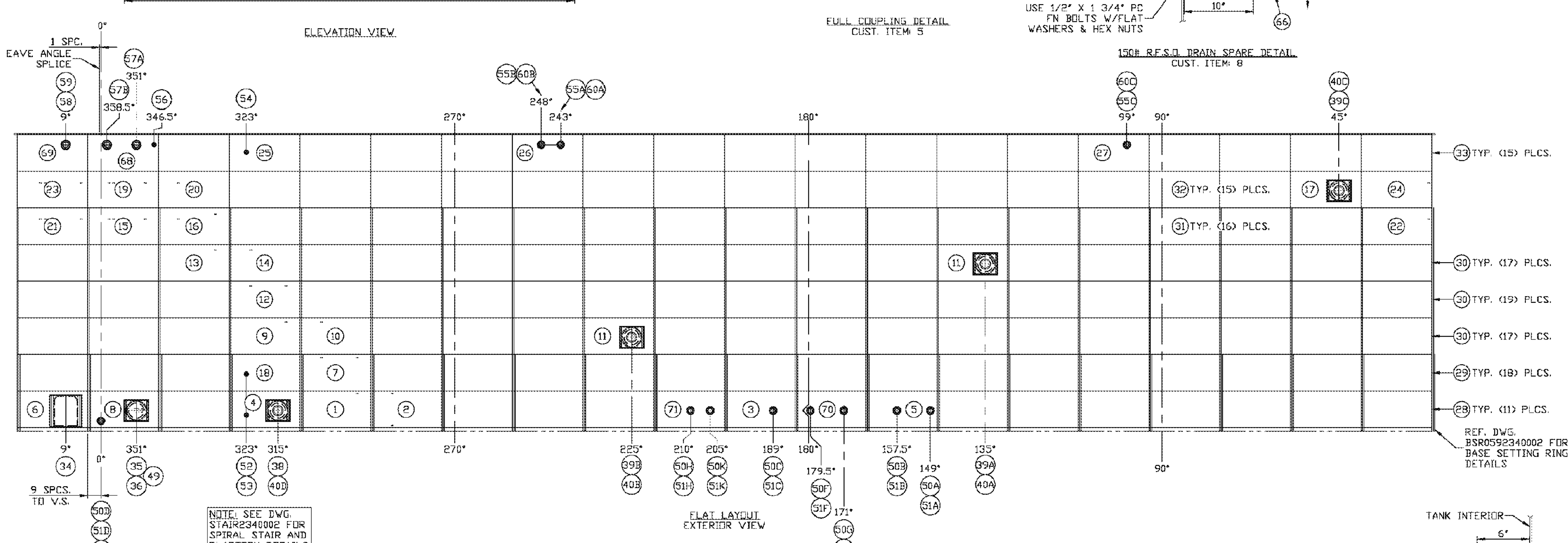

FLAT LAYOUT
EXTERIOR VIEW

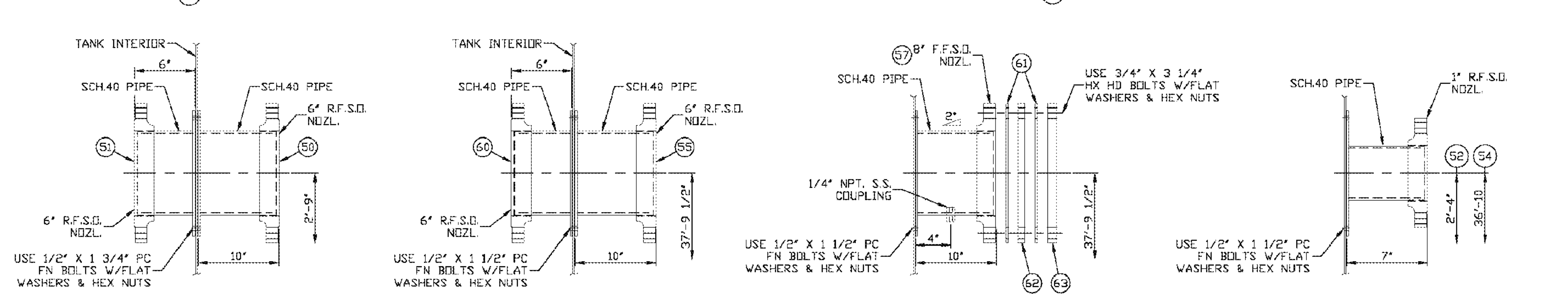

150# R.F.S.O. DOUBLE NOZZLE DETAIL
CUST. ITEMS: 3, 4, 6, 7, 15, 19 & 24

150# R.F.S.O. DOUBLE NOZZLE DETAIL
CUST. ITEMS: 21, 22 & 25

150# F.F.S.O. VIEWING PORT DETAIL
CUST. ITEMS: 11 & 12

150# R.F.S.O. INSTRUMENT NOZZLE DETAIL
CUST. ITEMS: 18 & 23

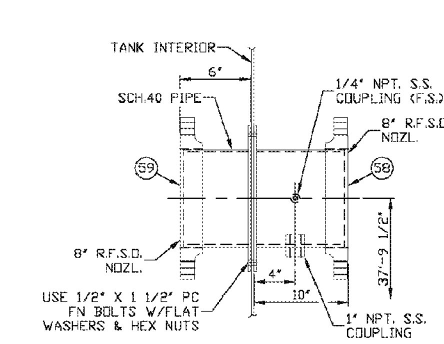

150# R.F.S.O. DOUBLE NOZZLE DETAIL
CUST. ITEM: 20

SAFETY/OPERATIONAL NOTES:
1) TANK IS DESIGNED FOR LOADS FROM A LIQUID PRODUCT.
2) DO NOT FIELD CUT ANY OPENINGS IN TANK WITHOUT WRITTEN CONSENT FROM TANK CONNECTION.
3) TANK FOUNDATIONS SHALL BE LEVEL WITHIN 1/8" IN ANY 30 FT. CIRCUMFERENCE UNDER THE TANK SHELL. LEVELNESS ON CIRCUMFERENCE SHALL NOT VARY MORE THAN 1/4" FROM AN ESTABLISHED PLANE. TANK PADDING TO BE USED ON CONCRETE FOUNDATIONS. VAPOR BARRIER TO BE USED ON GRAVEL AND SAND FOUNDATIONS.
4) IF ANCHOR BOLTS ARE NOT PROVIDED BY TANK CONNECTION, ANCHORING FOR ALL WIND AND SEISMIC LOADS IS THE RESPONSIBILITY OF CUSTOMER.
5) APPLICATION OF LOADS TO TANK FROM EQUIPMENT, OTHER THAN NOTED ON THIS DRAWING, MUST BE APPROVED IN WRITING BY TANK CONNECTION PRIOR TO INSTALLATION.
6) TANK IS DESIGNED FOR ATMOSPHERIC (EQUALIZED) PRESSURE INTERNALLY AND EXTERNALLY. CUSTOMER TO ASSURE PROPER VENTILATION IS PROVIDED AND MAINTAINED.

ERECTION NOTES:
1) USE ONLY HARDWARE FURNISHED WITH TANK. ALL BOLTS MUST MEET SPECIAL HIGH STRENGTH REQUIREMENTS.
2) INSTALL TANK SEGMENTS IN A COUNTER-CLOCKWISE DIRECTION WHEN WORKING FROM TOP DOWN. INSTALL TANK SEGMENTS IN A CLOCKWISE DIRECTION WHEN WORKING FROM BOTTOM UP.
3) TANK SHALL BE ADEQUATELY BRACED DURING ERECTION TO PREVENT WIND DAMAGE.
4) WHEN ENCAPSULATED BOLTS ARE REQUIRED, THEY WILL BE UTILIZED IN THE STORED LIQUID ZONE ONLY.
5) ERECTION CONTRACTOR TO COORDINATE TOUCH-UP COATING PROCEDURES. CONTRACTOR TO FOLLOW MANUFACTURER'S LABEL INSTRUCTIONS.
6) ADEQUATE BLOCKING SHOULD BE USED TO PROTECT BOLTED PANELS IF REMOVED FROM SHIPPING PALLETS PRIOR TO FIELD INSTALLATION.

DESIGN CRITERIA:
1) TANK DESIGN PER AWWA D103-09
2) SEISMIC DESIGN PER AWWA D103-09, Ss=25.0%, S1=8.0%, I=1.25, SITE CLASS=D, GROUP=2.
3) WIND DESIGN PER AWWA D103-09, 90 MPH, I=1.15, EXP.=C, WIND PRESSURE=18.0 psf.
4) DECK IS DESIGNED FOR 25 PSF LIVE LOAD.
5) TANK IS DESIGNED FOR STORAGE OF WASTEWATER WITH A SPECIFIC GRAVITY OF 1.10
6) ACCEPTABLE LIQUID PH RANGE: BETWEEN 4-9 ASSUMED
7) OPERATING TEMPERATURE: -22°F TO 200°F
8) OPERATING PRESSURE: +6.0/-0.05 oz./in^2
9) TANK CAPACITY: 753,300 GALLONS (BASED ON 3'-0" FREEBOARD)
10) HARDWARE: SIDEWALL: POLY CAP FN BOLTS W/JS500 FLAT WASHERS & HEX NUTS
11) ESTIMATED WEIGHT: 100,000 LBS. EMPTY (5% ADDED)
12) TANK CONSTRUCTED OF ASTM CERTIFIED SHEET, PLATE AND STRUCTURAL MEMBERS.

TANK COATINGS:
INTERIOR PRIMER: LIQ FUSION 7000 FBE 7 MILS NOMINAL DFT RANGE OF 6-9 MILS
EXTERIOR PRIMER: EXT FUSION 5000 FBE 3 MILS NOMINAL DFT RANGE OF 3-5 MILS
EXTERIOR TOPCOAT: EXT FUSION SDP 3 MILS NOMINAL DFT RANGE OF 3-5MILS
EXTERIOR COLOR: WHITE (RAL 9016)
NOTE: ALL COATINGS ARE APPLIED OVER AN SP10 SURFACE BLAST AND FUSED TO SUBSTRATE SURFACE.
SEALANT: WHITE (SIKA FLEX TS+)

REFERENCE DRAWINGS:

BASE SETTING RING	BSR0592340002
WIND GIRDER LAYOUT	GIRD1708002
HARDWARE SHEET	HRDW2643001
SPIRAL STAIR & PLATFORM LAYOUT	STAIR2340002

CERTIFIED
APPROVED FOR CONSTRUCTION

TANK CONNECTION
AFFILIATE GROUP
3609 NORTH 16TH ST . PARSONS, KANSAS 67357
620.423.3010 . FAX: 620.423.3999

BY ACCEPTING POSSESSION OF THIS DOCUMENT, RECIPIENT AGREES THAT ITS CONTENTS ARE CONFIDENTIAL, PROPRIETARY TRADE SECRETS OF THE TANK CONNECTION. NO PORTION OF THIS DOCUMENT MAY BE REPRODUCED, DISTRIBUTED, OR USED IN ANY MANNER WITHOUT WRITTEN PERMISSION FROM THE TANK CONNECTION.

REV	REVISION	DATE	BY	APP
B				
A	CHANGE LOCATION	07/06/2012	BW	JBB

CUSTOMER	QUASAR ENERGY GROUP						
PROJECT NAME AND LOCATION	QUASAR ENERGY GROUP RINGLER FARMS - CARDINGTON, OHIO						
DWG TITLE	MAIN ASSEMBLY DETAILS- DIGESTER TANK 750K GAL. TANK						
DWN BY	JK	DATE:	01/12/12	JOB NO	2493	DWG NO	BCL0590392493002
CHK BY	JA	DATE:	01/13/12				

750,000 GAL. TANK STRUCTURAL SHOP DRAWING
SCALE: N.T.S.

quasar energy group
quasar energy group
7624 Riverview Road
PO Box 31023
Cleveland OH 44141
Phone: 216.986.9999

Scale: SEE DETAIL

This drawing contains valuable confidential and proprietary information that belongs to quasar energy group, llc ("quasar"), and is subject to a separate Confidentiality and Nondisclosure Agreement. quasar is the author and owner of this drawing, and retains all common law, statutory and other rights and privileges with respect hereto, including copyrights. The information contained herein may not at any time be used for any unauthorized purpose, nor reproduced by or provided to any third party, without the prior written consent of quasar.

STATE OF OHIO
ALAN R. JOHNSON
46333
REGISTERED PROFESSIONAL ENGINEER

AS BUILT

Rev.	ECN Number	Date
2		
1		
0	AS BUILT	_/_/_

Drawing Name:
750K GAL. DIGESTER TANK STRUCTURAL SHOP DRAWING

Project Name and Address:
0058-CAR-OH-11

RINGLER FARMS
ADS Facility
ecoFarmsystem 980

2277 County Road 156
Cardington, OH 43315-9742

Area: _
Author: BR
Calculated: _
Checked: RN
Sheet Number: S-26

© 2012, Quasar Energy Group, LLC. All rights reserved.

P:\SBE Projects\0058-CAR-OH-11 - Ringler Farms\BUILDING DRAWINGS\CURRENT DRAWINGS (AS BUILT)\RINGLER FARMS STRUCTURAL.dwg
11/15/2013 3:41 PM

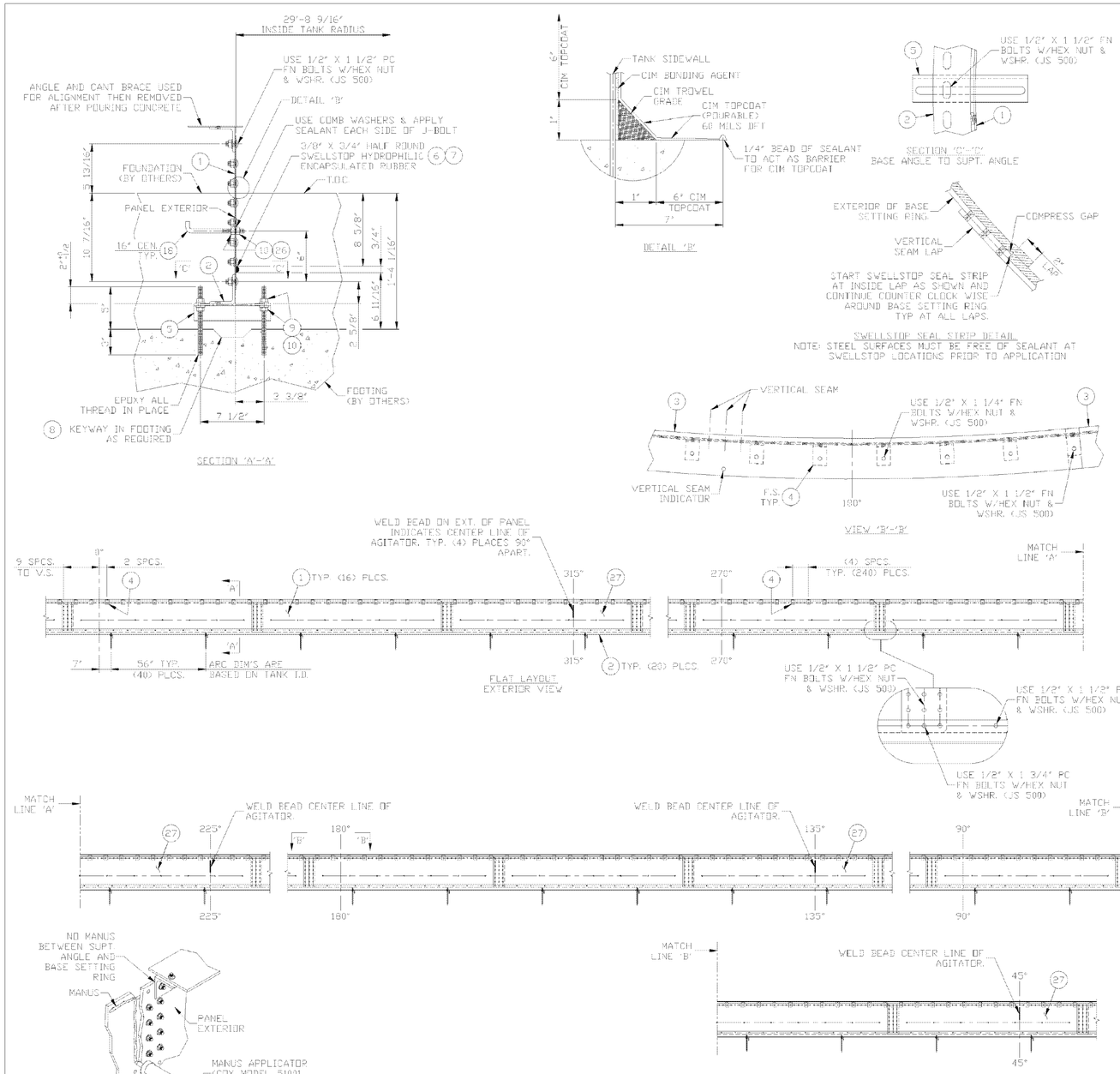

ITEM	B/S	PART NO.	QTY	DESCRIPTION	EST. WT.	PAINT
1	B	1708002020	16	BSR PANEL 5/16" 3RV GR.60	191	I/E
2	B	1226001031	20	BASE ANGLE 3 1/2 X 3 X 1/4"	51	N
3	B	1226001032	20	CANT BRACE 10GA. GR.40	26	Z
4	B	475002004	240	ANGLE L3" X 3" X 1/4" X 2" LG.	1	Z
5	B	1211001030	40	SUPPORT CLIP 1/4"PL X 9" LG.	3	N
6	-	SWSTADH	1	(GALS.) SWELLSTOP PRIMER ADHESIVE		N
7	-	SWSTHR383425	9	(25' ROLLS) 3/8" X 3/4" HALF ROUND SWELLSTOP		N
8	-	ALLTHR1208	80	ALL THREAD 1/2"-13 UNC X 8"	3	
9	-	WSHFG0500	176	1/2" FLAT WASHER HDG		
10	-	NUTHG0500	484	1/2" HEX NUT HDG		
11	-	BLTFJS05001250	242	BOLT 1/2" X 1 1/4" FN JS500 GR8.2		
12	-	BLTFJS05001500	66	BOLT 1/2" X 1 1/2" FN JS500 GR8.2		
13	-	BLTFJSC05001500	924	BOLT 1/2" X 1 1/2" FN PC JS500 GR8.2		
14	-	BLTFJSC05001750	66	BOLT 1/2" X 1 3/4" FN PC JS500 GR8.2		
15	-	WSHFJS0500	1298	1/2" FLAT WASHER JS 500		
16	-	NUTHJS0500	1298	1/2" HEX NUT JS 500		
17	-	SFTSP600MLW	55	SIKA FLEX TS PLUS (WHITE) 20 OZ. TUBES		
18	-	JBOLT05008LG	140	1/2" X 8" J-BOLT		
19	-	HIRE500111	4	HILTI COMPOUND ADHESIVE HY 150 11.1		
20	-	HILTIAPP	1	HILTI APPLICATOR		
21	-	PNTBRUSH12	3	PAINT BRUSH 1/2"		
22	-	CIM1000SEALPOUR	2	CIM 1000 POURABLE GRADE SEALANT IN 4 1/2 GAL. UNIT		
23	-	CIM1000ACT	4	CIM 1000 ACTIVATOR IN 1/2 GALLON UNIT		
24	-	CIMBONDAG	1	CIM BONDING AGENT IN 1 GAL. UNIT		
25	-	CIM1000SEAL	2	CIM 1000 TROWEL GRADE SEALANT IN 4 1/2 GAL. UNIT		
26	-	WSHCC0500	308	WASHER 1/2" COMB STEEL/NEOPRENE HDG		
27	B	2340002003	4	BSR PANEL 5/16" 3RV GR.60 W/ AGITATOR MARK	191	I/E

ASSY. WEIGHT= 5,960#
ROLL PANELS TO Ø59'-5"

B.S.R. 5/16"PL GR.60 3 R.V.		
LOCATION	DESCRIPTION	QTY
J-BOLT TO PANEL WASHERS	1/2" COMBINATION WASHER GAVL/NEOP	280
J-BOLT TO PANEL NUTS	1/2" HX NUT HDG	280
SUPT. ANGLE TO ALL THREAD WASHERS	1/2" FLAT WASHER HDG	160
SUPT. ANGLE TO ALL THREAD NUTS	1/2" HX NUT HDG	160
BASE L TO SUPT. L BOLTS	1/2" X 1 1/2" FN JS 500 BOLT	40
BASE L HORIZONTAL SEAM BOLTS	1/2" X 1 1/2" PC FN JS 500 BOLT	240
BASE L HORIZONTAL SEAM LAP BOLTS	1/2" X 1 3/4" PC FN JS 500 BOLT	60
BASE L HORIZONTAL SEAM WASHERS	1/2" JS 500 FLAT WASHER	340
BASE L HORIZONTAL SEAM NUTS	1/2" JS 500 HX NUT	340
VERTICAL SEAM BOLTS	1/2" X 1 1/2" PC FN JS 500 BOLT	360
VERTICAL SEAM WASHERS	1/2" JS 500 FLAT WASHER	360
VERTICAL SEAM SEAM NUTS	1/2" JS 500 HX NUT	360
SEALANT	MANUS (TUBES)	50

TEMPORARY HARDWARE FOR ANGLE & CANT BRACE INSTALLATION		
LOCATION	DESCRIPTION	QTY
ITEM #4 HORIZONTAL SEAM BOLTS	1/2" X 1 1/2" PC FN JS 500 BOLT	240
ITEM #4 HORIZONTAL SEAM WASHERS	1/2" JS 500 FLAT WASHER	240
ITEM #4 HORIZONTAL SEAM NUTS	1/2" JS 500 HX NUT	240
CANT BRACE BOLTS	1/2" X 1 1/4" FN JS 500 BOLT	220
CANT BRACE LAP BOLTS	1/2" X 1 1/2" FN JS 500 BOLT	20
CANT BRACE WASHERS	1/2" JS 500 FLAT WASHER	240
CANT BRACE NUTS	1/2" JS 500 HX NUT	240

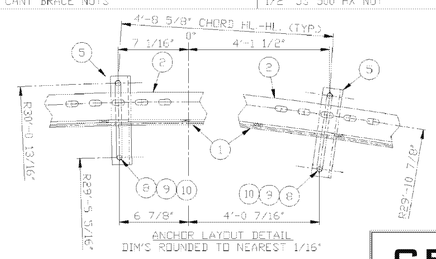

REFRENCE DRAWING
CIM 1000 APPLICATION GUIDELINES-Q-037

CERTIFIED
APPROVED FOR CONSTRUCTION

INSTALLATION NOTES:
1.) BASE SETTING RING TO BE LEVEL WITHIN 1/16".
2.) BASE SETTING RING TO BE CONCENTRIC WITHIN 1/4".

THE INFORMATION ON THIS DOCUMENT IS CONFIDENTIAL PROPERTY OF TANK MANUFACTURER AND/OR ITS AFFILIATES. ANY OTHER USE, RETENTION, DISSEMINATION, FORWARDING, PRINTING OR COPYING OF THIS DOCUMENT TO UNAUTHORIZED PARTIES IS STRICTLY PROHIBITED, WITHOUT THE EXPRESSED WRITTEN CONSENT OF TANK MANUFACTURER.

TANK CONNECTION
AFFILIATE GROUP
3609 North 15th St. • Parsons, Kansas 67357
620.421.9512 • Fax: 620.421.9660

REV	REVISION	DATE	BY	APP
E				
D				
C				
B				
A				

DRAWN BY:	DJC	B.S.R. ASSEMBLY FOR Ø59' TANK	
DATE:	8/15/11		
REVIEWED BY:	JBB		
DATE:	8/19/11	R SCALE: NTS	DRAWING NO. BSR0592340002

750,000 GAL. TANK STRUCTURAL SHOP DRAWING

SCALE: N.T.S.

quasar energy group
quasar energy group
7624 Riverview Road
PO Box 31023
Cleveland OH 44141
Phone: 216.986.9999

Scale: SEE DETAIL

This drawing contains valuable confidential and proprietary information that belongs to quasar energy group, llc ("quasar"), and is subject to a separate Confidentiality and Nondisclosure Agreement. quasar is the author and owner of this drawing, and retains all common law, statutory and other rights and privileges with respect hereto, including copyrights. The information contained herein may not at any time be used for any unauthorized purpose, nor reproduced by or provided to any third party, without the prior written consent of quasar.

STATE OF OHIO
ALAN R. JOHNSON
46333
REGISTERED
PROFESSIONAL ENGINEER

AS BUILT

Rev.	ECN Number	Date
2		
1		
0	AS BUILT	__/__/__

Drawing Name:
750K GAL. DIGESTER TANK STRUCTURAL SHOP DRAWING

Project Name and Address:
0058-CAR-OH-11

RINGLER FARMS
ADS Facility
ecoFarmsystem 980

2277 County Road 156
Cardington, OH 43315-9742

Area: _
Author: BR
Calculated: _
Checked: RN
Sheet Number: S-27

© 2012, Quasar Energy Group, LLC. All rights reserved.

P:\SBE Projects\0058-CAR-OH-11 - Ringler Farms\BUILDING DRAWINGS\CURRENT DRAWINGS (AS BUILT)\RINGLER FARMS STRUCTURAL.dwg
11/15/2013 3:40 PM

ITEM	M/S	PART NO.	QTY	DESCRIPTION	EST. WT.	PAINT
1	B	1708002022	28	1/2"PL WIND GIRTER	227	E
2	B	1708002021	28	1/2"PL WIND GIRTER SPLICE	56	E
3	B	475001120	28	1/2"PL MEMBRANE ROOF CLAMP	48	E
4	B	BLE202142	28	L3" x 3" X 3/8" X EAVE ANGLE	67	E
5						
6	B	ESP3030375	28	EAVE ANGLE SPLICE 12GA.	2	E
7						
* 8	-	8891179	96	1 3/16" EYELET W/1/2" X 1 1/2" SHANK SS316		N
9	B	923001020	28	GIRDER SEAL SPLICE 20GA.		E

* McMASTER-CARR OR EQUAL.

ERECTION NOTE: WIND GIRDER SEAMS TO BE SEALED WITH SEALANT WHEN TANK IS INSTALLED

ERECTION NOTE: ITEM 3 TO BE INSTALLED BY OTHERS.

HARDWARE NOTE: ALL HARDWARE IS RELEASE ON DRAWING# HPDW475001

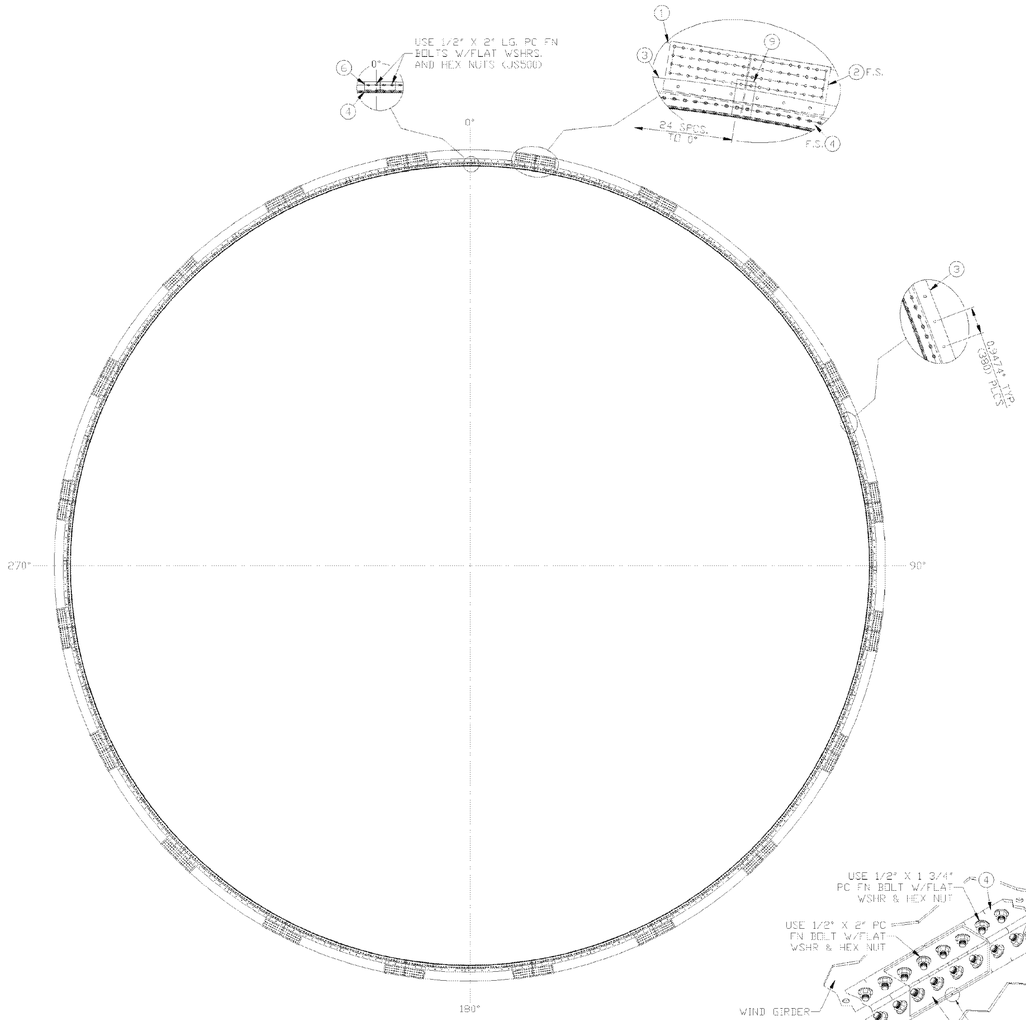

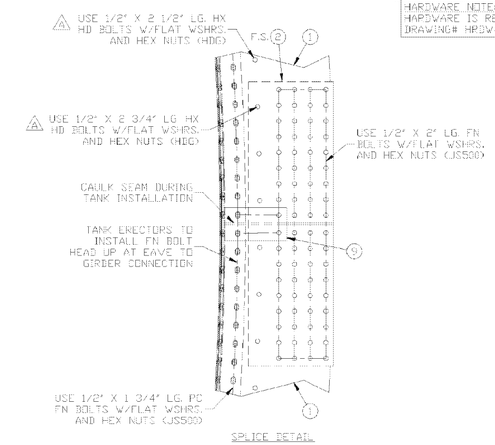

SPLICE DETAIL

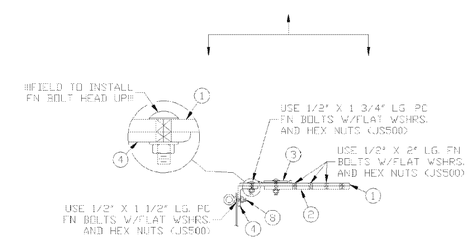

SECTION AT EAVE SPLICE

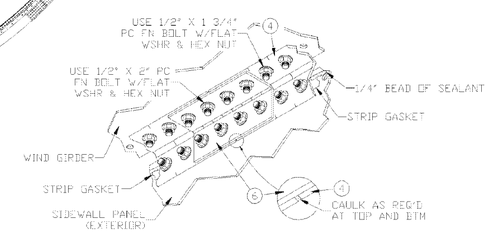

EAVE ANGLE SPLICE DETAIL

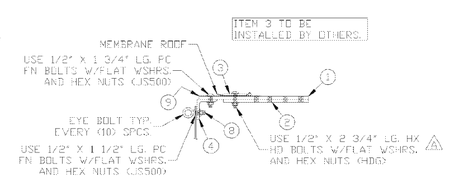

MEMBRANE CLAMP DETAIL

ASSY. WEIGHT= #8,000

THE INFORMATION ON THIS DOCUMENT IS CONFIDENTIAL PROPERTY OF TANK MANUFACTURER AND/OR ITS AFFILIATES. ANY OTHER USE, RETENTION, DISSEMINATION, FORWARDING, PRINTING OR COPYING OF THIS DOCUMENT TO UNAUTHORIZED PARTIES IS STRICTLY PROHIBITED, WITHOUT THE EXPRESSED WRITTEN CONSENT OF TANK MANUFACTURER.

TANK CONNECTION AFFILIATE GROUP
3609 North 16th St. Parsons, Kansas 67357

REV	REVISION	DATE	BY	APP
E				
D				
C				
B				
A	CHANGED MEMBRANE CLAMP BOLTS	11/15/10	JA	DJC

DRAWN BY: JA
DATE: 7/28/10
REVIEWED BY: DJC
DATE: 7/28/10

WIND GIRTER LAYOUT FOR 59' TANK

SCALE: NTS | DRAWING NO. GIRDL708002

750,000 GAL. TANK STRUCTURAL SHOP DRAWING

SCALE: N.T.S.

quasar energy group
quasar energy group
7624 Riverview Road
PO Box 31023
Cleveland OH 44141
Phone: 216.986.9999

Scale: SEE DETAIL

This drawing contains valuable confidential and proprietary information that belongs to quasar energy group, llc ("quasar"), and is subject to a separate Confidentiality and Nondisclosure Agreement. quasar is the author and owner of this drawing, and retains all common law, statutory and other rights and privileges with respect hereto, including copyrights. The information contained herein may not at any time be used for any unauthorized purpose, nor reproduced by or provided to any third party, without the prior written consent of quasar.

STATE OF OHIO
ALAN R. JOHNSON
46333
REGISTERED
PROFESSIONAL ENGINEER

AS BUILT

Rev.	ECN Number	Date
2		
1		
0	AS BUILT	__/__/__

Drawing Name:
750K GAL. DIGESTER TANK STRUCTURAL SHOP DRAWING

Project Name and Address:
0058-CAR-OH-11

RINGLER FARMS
ADS Facility
ecoFarmsystem 980

2277 County Road 156
Cardington, OH 43315-9742

Area: —
Author: BR
Calculated: —
Checked: RN
Sheet Number: S-28

© 2012, Quasar Energy Group, LLC. All rights reserved.

P:\SBE Projects\0058-CAR-OH-11 - Ringler Farms\BUILDING DRAWINGS\CURRENT DRAWINGS (AS BUILT)\RINGLER FARMS STRUCTURAL.dwg
11/15/2013 3:40 PM

RING 1: 5/16"PL 3RV		
LOCATION	DESCRIPTION	QTY
B.S.R. HORIZONTAL SEAM BOLTS	1/2" X 1 1/2" PC FN JS 500 BOLT	900
B.S.R. HORIZONTAL SEAM LAP BOLTS	1/2" X 1 3/4" PC FN JS 500 BOLT	60
B.S.R. HORIZONTAL SEAM WASHERS	1/2" FLAT WASHER	960
B.S.R. HORIZONTAL SEAM NUTS	1/2" HX NUT	960
VERTICAL SEAM BOLTS	1/2" X 1 1/2" PC FN JS 500 BOLT	1460
VERTICAL SEAM WASHERS	1/2" FLAT WASHER	1460
VERTICAL SEAM NUTS	1/2" HX NUT	1460
HORIZONTAL SEAM BOLTS	1/2" X 1 1/2" PC FN JS 500 BOLT	900
HORIZONTAL SEAM LAP BOLTS	1/2" X 1 3/4" PC FN JS 500 BOLT	60
HORIZONTAL SEAM WASHERS	1/2" FLAT WASHER	960
HORIZONTAL SEAM NUTS	1/2" HX NUT	960
SHEET SEALANT	SEALANT (TUBES)	50

RING 2: 1/4"PL 3RV		
LOCATION	DESCRIPTION	QTY
VERTICAL SEAM BOLTS	1/2" X 1 1/2" PC FN JS 500 BOLT	1460
VERTICAL SEAM WASHERS	1/2" FLAT WASHER	1460
VERTICAL SEAM NUTS	1/2" HX NUT	1460
HORIZONTAL SEAM BOLTS	1/2" X 1 1/2" PC FN JS 500 BOLT	900
HORIZONTAL SEAM LAP BOLTS	1/2" X 1 3/4" PC FN JS 500 BOLT	60
HORIZONTAL SEAM WASHERS	1/2" FLAT WASHER	960
HORIZONTAL SEAM NUTS	1/2" HX NUT	960
SHEET SEALANT	SEALANT (TUBES)	50

RING 3: 1/4"PL 3RV		
LOCATION	DESCRIPTION	QTY
VERTICAL SEAM BOLTS	1/2" X 1 1/2" PC FN JS 500 BOLT	980
VERTICAL SEAM WASHERS	1/2" FLAT WASHER	980
VERTICAL SEAM NUTS	1/2" HX NUT	980
HORIZONTAL SEAM BOLTS	1/2" X 1 1/2" PC FN JS 500 BOLT	920
HORIZONTAL SEAM LAP BOLTS	1/2" X 1 3/4" PC FN JS 500 BOLT	40
HORIZONTAL SEAM WASHERS	1/2" FLAT WASHER	960
HORIZONTAL SEAM NUTS	1/2" HX NUT	960
SHEET SEALANT	SEALANT (TUBES)	40

RING 4: 1/4"PL 2RV		
LOCATION	DESCRIPTION	QTY
VERTICAL SEAM BOLTS	1/2" X 1 1/2" PC FN JS 500 BOLT	980
VERTICAL SEAM WASHERS	1/2" FLAT WASHER	980
VERTICAL SEAM NUTS	1/2" HX NUT	980
HORIZONTAL SEAM BOLTS	1/2" X 1 1/2" PC FN JS 500 BOLT	920
HORIZONTAL SEAM LAP BOLTS	1/2" X 1 3/4" PC FN JS 500 BOLT	40
HORIZONTAL SEAM WASHERS	1/2" FLAT WASHER	960
HORIZONTAL SEAM NUTS	1/2" HX NUT	960
SHEET SEALANT	SEALANT (TUBES)	40

RING 5: 1/4"PL 2RV		
LOCATION	DESCRIPTION	QTY
VERTICAL SEAM BOLTS	1/2" X 1 1/2" PC FN JS 500 BOLT	980
VERTICAL SEAM WASHERS	1/2" FLAT WASHER	980
VERTICAL SEAM NUTS	1/2" HX NUT	980
HORIZONTAL SEAM BOLTS	1/2" X 1 1/4" PC FN JS 500 BOLT	920
HORIZONTAL SEAM LAP BOLTS	1/2" X 1 1/2" PC FN JS 500 BOLT	40
HORIZONTAL SEAM WASHERS	1/2" FLAT WASHER	960
HORIZONTAL SEAM NUTS	1/2" HX NUT	960
SHEET SEALANT	SEALANT (TUBES)	40

RING 6: 3/16"PL 2RV		
LOCATION	DESCRIPTION	QTY
VERTICAL SEAM BOLTS	1/2" X 1 1/4" PC FN JS 500 BOLT	980
VERTICAL SEAM WASHERS	1/2" FLAT WASHER	980
VERTICAL SEAM NUTS	1/2" HX NUT	980
HORIZONTAL SEAM BOLTS	1/2" X 1 1/4" PC FN JS 500 BOLT	920
HORIZONTAL SEAM LAP BOLTS	1/2" X 1 1/2" PC FN JS 500 BOLT	40
HORIZONTAL SEAM WASHERS	1/2" FLAT WASHER	960
HORIZONTAL SEAM NUTS	1/2" HX NUT	960
SHEET SEALANT	SEALANT (TUBES)	40

RING 7: 3/16"PL 1RV		
LOCATION	DESCRIPTION	QTY
VERTICAL SEAM BOLTS	1/2" X 1 1/4" PC FN JS 500 BOLT	480
VERTICAL SEAM WASHERS	1/2" FLAT WASHER	480
VERTICAL SEAM NUTS	1/2" HX NUT	480
HORIZONTAL SEAM BOLTS	1/2" X 1 1/4" PC FN JS 500 BOLT	940
HORIZONTAL SEAM LAP BOLTS	1/2" X 1 1/2" PC FN JS 500 BOLT	20
HORIZONTAL SEAM WASHERS	1/2" FLAT WASHER	960
HORIZONTAL SEAM NUTS	1/2" HX NUT	960
SHEET SEALANT	SEALANT (TUBES)	30

TOP RING: 3/16"PL 1RV		
LOCATION	DESCRIPTION	QTY
VERTICAL SEAM BOLTS	1/2" X 1 1/4" PC FN JS 500 BOLT	480
VERTICAL SEAM WASHERS	1/2" FLAT WASHER	480
VERTICAL SEAM NUTS	1/2" HX NUT	480
EAVE ANGLE TO PANEL BOLTS	1/2" X 1 1/2" PC FN JS 500 BOLT	960
EAVE ANGLE TO PANEL V.S. BOLTS	1/2" X 1 3/4" PC FN JS 500 BOLT	20
EAVE ANGLE TO PANEL SPLICE BOLTS	1/2" X 1 3/4" PC FN JS 500 BOLT	80
EAVE ANGLE TO PANEL WASHERS	1/2" FLAT WASHER	960
EAVE ANGLE TO PANEL NUTS	1/2" HX NUT	960
EAVE ANGLE TO PANEL STRIP GASKET	STRIP GASKET 1 3/4" WIDE EPDM (FEET)	187
NYLON LAP WEDGE	BREAKABLE NYLON WEDGE	20
SHEET SEALANT	SEALANT (TUBES)	30
NYLON WEDGE GASKET BOLT	1/2" X 1 3/4" PC FN JS 500 BOLT	60

WIND GIRDER INSTALLATION HARDWARE		
DURING TANK ERECTION HARDWARE		
LOCATION	DESCRIPTION	QTY
EAVE ANGLE TO GIRDER	1/2" X 1 3/4" PC FN JS 500 BOLT	880
EAVE ANGLE TO GIRD AT EAVE SPLICE	1/2" X 2" PC FN JS 500 BOLT	80
GIRDER SPLICE BOLTS	1/2" X 2" FN JS 500 BOLT	1440
EAVE ANGLE TO GIRDER WASHERS	1/2" FLAT WASHER	960
EAVE ANGLE TO GIRDER NUTS	1/2" HX NUT	960
MEMBRANE INSTALLATION HARDWARE		
LOCATION	DESCRIPTION	QTY
CLAMP PLATE TO GIRDER BOLTS	1/2" X 2 1/2" HEX HEAD HDG BOLT	260
CLAMP PLATE AT GIRDER SPLICE BOLTS	1/2" X 2 3/4" HEX HEAD HDG BOLT	120
CLAMP PLATE TO GIRDER WASHERS	1/2" FLAT WASHER HDG	359
CLAMP PLATE TO GIRDER NUTS	1/2" HX NUT HDG	359

MISCELLANEOUS HARDWARE & GASKET		
LOCATION	DESCRIPTION	QTY
SPOOL BOLTS BTM RING	1/2" X 1 3/4" PC FN JS 500 BOLT	128
SPOOL BOLTS	1/2" X 1 1/2" PC FN JS 500 BOLT	140
SPOOL WASHERS	1/2" FLAT WASHER	236
SPOOL NUTS	1/2" HX NUT	236
SHELL MNWY. & MIXER MOUNT BOLTS	1/2" X 1 1/2" PC FN JS 500 BOLT	482
SHELL MNWY. & MIXER MOUNT WASHERS	1/2" FLAT WASHER	482
SHELL MNWY. & MIXER MOUNT NUTS	1/2" HX NUT	482
FLUSH CLEAN-OUT BOLTS	1/2" X 1 3/4" PC FN JS 500 BOLT	164
FLUSH CLEAN-OUT WASHERS	1/2" COMBINATION WASHER	164
FLUSH CLEAN-OUT NUTS	1/2" HX NUT	164
FLUSH CLEAN-OUT GASKET	STRIP GASKET 1 3/4" WIDE NITRILE (FEET)	34
ACCESSORY SEALANT	SEALANT (TUBES)	20

ITEM	D/S	PART NO.	QTY	DESCRIPTION	EST. WT.	PAINT
1	-	BLTFJSC05001250	5192	1/2" X 1 1/4" PC FN JS 500 BOLT		N
2	-	BLTFJSC05001500	13180	1/2" X 1 1/2" PC FN JS 500 BOLT		N
3	-	BLTFJSC05001750	1685	1/2" X 1 3/4" PC FN JS 500 BOLT		N
4	-	BLTFJSC05002000	88	1/2" X 2" PC FN JS 500 BOLT		N
5						
6	-	BLTFJS05002000	1584	1/2" X 2" FN JS 500 BOLT		N
7	-	BLTFJS05002250	616	1/2" X 2 1/4" FN JS 500 BOLT		N
8	-	BLTHG05002500	286	BOLT 1/2" X 2 1/2" HEX HD HDG GR5		N
9	-	BLTHG05002750	132	BOLT 1/2" X 2 3/4" HEX HD HDG GR5		N
10	-	WSHFJS0500	21443	1/2" FLAT WASHER JS500		N
11	-	NUTHJS0500	21443	1/2" HEX NUT JS500		N
12	-	WSHCG0500	180	1/2" COMBINATION WASHER GALV/NEOP.		N
13	-	SFTSP600ML.W	374	SIKA FLEX TS PLUS (WHITE) 20 OZ. TUBES		N
14	-	WEDGEN1	22	NYLON WEDGE GASKET		N
15	-	STRPGSKTNIT232	243	LN. FT. 1 3/4" WIDE STRIP GASKET NITRILE 2.32 O/C		N
16	-	WSHFG0500	418	WASHER 1/2" FLAT HDG		N
17	-	NUTHG0500	418	NUT 1/2" HEX HD HDG GR5		N

quasar energy group

quasar energy group
7624 Riverview Road
PO Box 31023
Cleveland OH 44141
Phone: 216.986.9999

Scale: SEE DETAIL

This drawing contains valuable confidential and proprietary information that belongs to quasar energy group, llc ("quasar"), and is subject to a separate Confidentiality and Nondisclosure Agreement. quasar is the author and owner of this drawing, and retains all common law, statutory and other rights and privileges with respect hereto, including copyrights. The information contained herein may not at any time be used for any unauthorized purpose, nor reproduced by or provided to any third party, without the prior written consent of quasar.

STATE OF OHIO
ALAN R. JOHNSON
46333
REGISTERED
PROFESSIONAL ENGINEER

AS BUILT

Rev.	ECN Number	Date
2		
1		
0	AS BUILT	__/__/__

Drawing Name:
750K GAL. DIGESTER TANK STRUCTURAL SHOP DRAWING

Project Name and Address:
0058-CAR-OH-11

RINGLER FARMS
ADS Facility
ecoFarmsystem 980

2277 County Road 156
Cardington, OH 43315-9742

Area: _
Author: BR
Calculated: _
Checked: RN
Sheet Number: S-29

THE INFORMATION ON THIS DOCUMENT IS CONFIDENTIAL PROPERTY OF TANK MANUFACTURER AND/OR ITS AFFILIATES. ANY OTHER USE, RETENTION, DISSEMINATION, FORWARDING, PRINTING OR COPYING OF THIS DOCUMENT TO UNAUTHORIZED PARTIES IS STRICTLY PROHIBITED, WITHOUT THE EXPRESSED WRITTEN CONSENT OF TANK MANUFACTURER.

TANK CONNECTION
AFFILIATE GROUP
3609 NORTH 15TH ST. . PARSONS, KANSAS 67357
620.423.3010 . FAX: 620.423.3999

REV	REVISION	DATE	BY	APP
E				
D				
C				
B				
A				

DRAWN BY:	JA	HARDWARE SHEET		
DATE:	12/27/11			
REVIEWED BY:	DJC			
DATE:	12/27/11	B	SCALE: NTS	DRAWING NO. HRDW2643001

750,000 GAL. TANK STRUCTURAL SHOP DRAWING

SCALE: N.T.S.

© 2012, Quasar Energy Group, LLC. All rights reserved.

P:\SBE Projects\0058-CAR-OH-11 - Ringler Farms\BUILDING DRAWINGS\CURRENT DRAWINGS (AS BUILT)\RINGLER FARMS STRUCTURAL.dwg
11/15/2013 3:40 PM

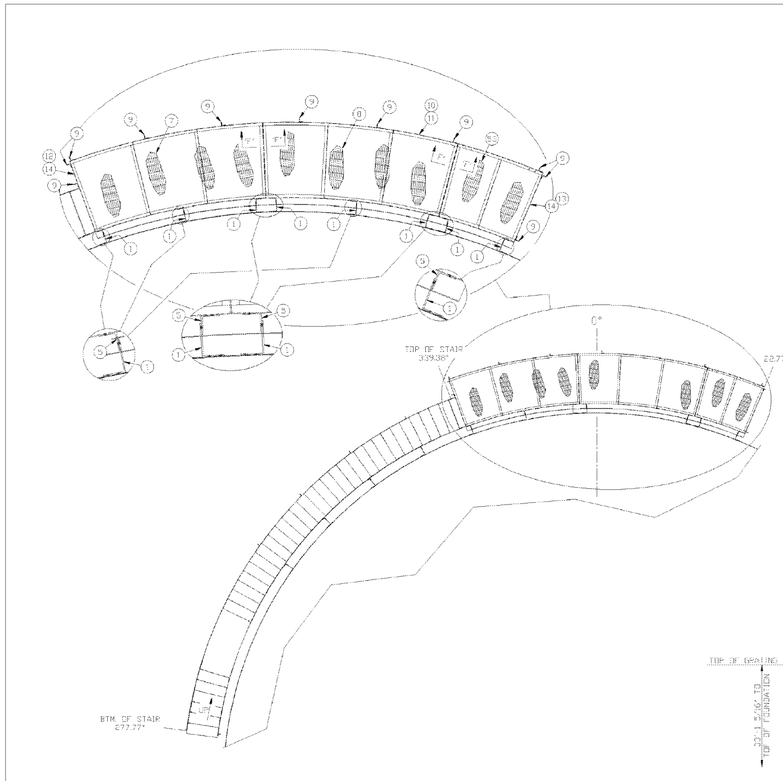

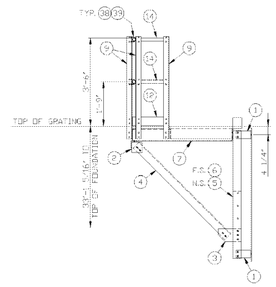

SECTION "B"

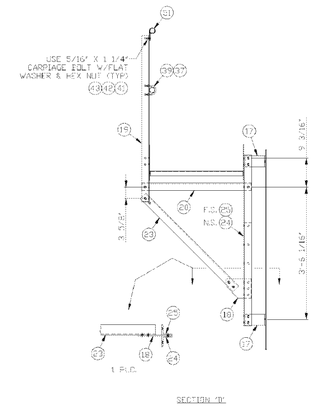

SECTION "D"

ITEM	QTY	PART NO.	QTY	DESCRIPTION	EST. WT	PAINT
1	B	475001056	16	PLATFORM SUPPORT CLIP 1/4"PL	3	Z
2	B	BUTCHKECLIP	8	PLATFORM KNEE BRACE CLIP ANGLE 3" X 3" X 3/8"	6	Z
3	B	9990167	8	PLATFORM KNEE BRACE CLIP 1/4"PL	4	Z
4	B	475001039	8	PATFORM KNEE BRACE ANGLE 4" X 4" X 61 13/16"	34	Z
5	B	475001037	8	PLATFORM SUPPORT ANGLE 4" X 4" X 60 13/16"	34	Z
6	B	475001036	8	PLATFORM SUPPORT BRACE ANGLE 3" X 4" X 32"	17	Z
7	B	475001021	1	PLATFORM FRAME ASSEMBLY D6 X 82#	732	Z
8	B	475001101	1	PLATFORM FRAME ASSEMBLY D6 X 82#	698	Z
9	B	053-096	11	HANDRAIL POST L2 1/2" X 2 1/2" X 1/4" X 49"	17	Z
10	B	475001049	7	ROLLET HANDRAIL PIPE 1.66" O.D. X 10'-6" LG	15	N
11	B	TBC493	5	TOEBOARD 1/8"PL X 4" X 50 7/8" O.A.L.	7	Z
12	B	475001058	1	TOEBOARD 10GA. X 4" X 17 3/16" O.A.L.	3	Z
13	B	475001059	1	TOEBOARD 10GA. X 4" X 52 1/8" O.A.L.	8	Z
14	-	HRPQLV166072	2	HANDRAIL PIPE 1.66" O.D. X 10'-6" LG	15	Z
15	B	594001064	8	HANDRAIL POST L2 1/2" X 2 1/2" X 1/4" X 53"	17	Z
16	A	CPM316R60	8	GUSSET PLATE 16GA.	3	Z
17	B	475001057	12	SUPPORT CLIP 1/4"PL	3	Z
18	A	710957318	6	KNEE BRACE CLIP 1/4"PL	3	Z
19	B	594001063	6	HANDRAIL POST L2 1/2" X 2 1/2" X 1/4" X 52 13/16"	16	Z
20	B	7028516	6	SUPPORT CROSS BRACE ANGLE 2 1/2" X 2 1/2" X 34 3/4"	12	Z
21	B	475001047	5	SUPPORT ANGLE 2 1/2" X 2 1/2" X 56 3/4"	21	Z
22	B	475001046	5	SUPPORT ANGLE BRACE 2 1/2" X 2 1/2" X 39 5/16"	13	Z
23	B	475001048	6	KNEE BRACE ANGLE 2 1/2" X 2 1/2" X 41 11/16"	13	Z
24	B	475001045	1	SUPPORT ANGLE 2 1/2" X 2 1/2" X 54 1/4"	19	Z
25	B	475001044	1	SUPPORT ANGLE BRACE 2 1/2" X 2 1/2" X 32 13/16"	11	Z
26	B	594001063	1	BTM HR POST 2 1/2" X 2 1/2" X 1/4" X 46 13/16"	17	Z
27	B	594001064	1	BTM SLPT POST 2 1/2" X 2 1/2" X 1/4" X 6 17/32"	4	Z
28	B	475001040	1	STAIRWAY INNER STRINGER TOP	22	Z
29	B	475001039	5	STAIRWAY INNER STRINGER MID	28	Z
30	B	475001038	1	STAIRWAY INNER STRINGER BTM	28	Z
31	B	475001043	1	STAIRWAY OUTER STRINGER TOP	22	Z
32	B	475001042	5	STAIRWAY OUTER STRINGER MID	28	Z
33	B	475001041	1	STAIRWAY OUTER STRINGER BTM	29	Z
34	-	STRTREADI2X30	41	STAIR TREAD 12"W X 30"LG	15	Z
35	-	NONSKIDI30	41	ADHESIVE NON SKID TAPE 1"W X 30" LG		N
36	B	475001050	19	SPIRAL STAIR HANDRAIL 1.66" O.D. X 0072" WALL	15	N
37	-	UBLTPG2375	19	U-BOLT FOR 2" PIPE W/NUTS (GALV.)		N
38	-	UBLTPG156	22	U-BOLT FOR 1 1/4" PIPE W/NUTS (GALV.)		N
39	-	WSHFG0375	91	3/8" WASHER FLAT GALV		N
40	-	CCF158	16	PIPE CAP 1 5/8" PLASTIC		N
41	-	BLTCG031251250	17	5/16" X 1 1/4" CARRIAGE BOLT GALV		N
42	-	WSHFG03125	17	5/16" WASHER FLAT GALV		N
43	-	NUTHG03125	17	5/16" HEX NUT HDG		N
44	-	BLTFJG501250	214	1/2" X 1 1/4" FN BOLT JS500		N
45	-	BLTFJG501500	247	1/2" X 1 1/2" FN BOLT JS500		N
46	-	BLTFJG501750	86	1/2" X 1 3/4" FN BOLT JS500		N
47	-	BLTFJG50SS01500	55	1/2" X 1 1/2" PC FN BOLT JS500		N
48	-	WSHFJG500	606	1/2" WASHER FLAT JS500		N
49	-	NUTHJG500	606	1/2" HEX NUT JS500		N
50	-	WSHBG0500	16	1/2" BEVEL WASHER HDG		N
51	-	CFD500321A1	15	HANDRAIL CLAMP MODEL CL-TBB-15		N
52	B	TBC573	1	TOEBOARD 1/8"PL X 4" X 50 7/8" O.A.L.	8	Z
53	B	475001104	1	PLATFORM FRAME ASSEMBLY D6 X 82#	386	Z

ASSY. WEIGHT: 4,751#

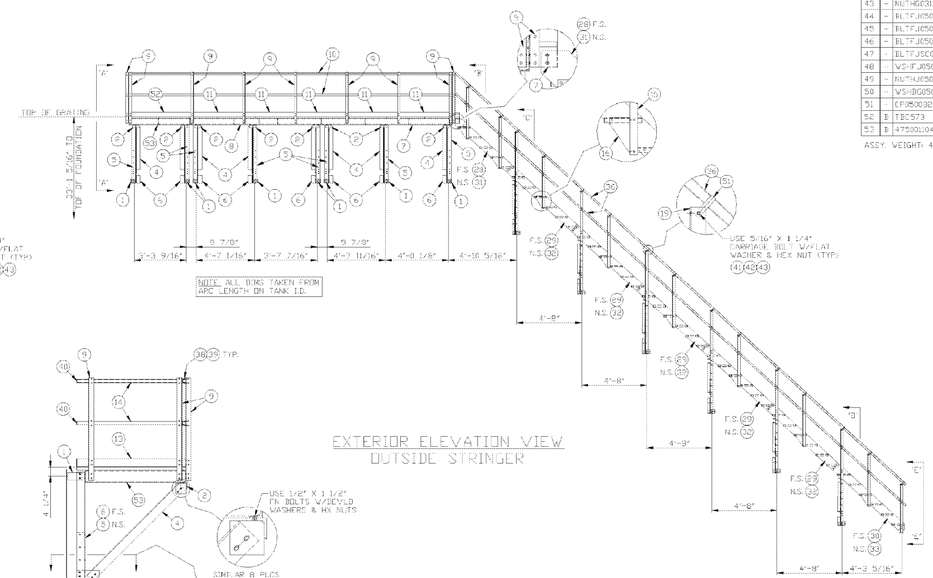

NOTE: ALL DIMS TAKEN FROM ARC LENGTH ON TANK I.D.

EXTERIOR ELEVATION VIEW
OUTSIDE STRINGER

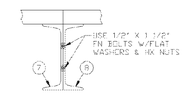

SECTION "F"-"F"

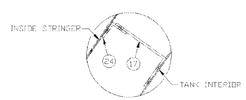

SUPPORT CLIP DETAIL
TYP. (6) PLCS.

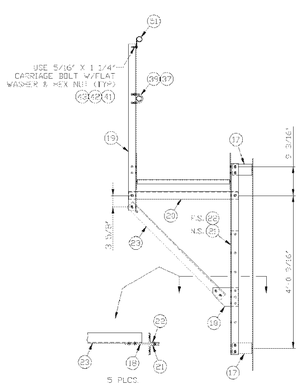

* SECTION "C"
TYP. 5 PLCS.

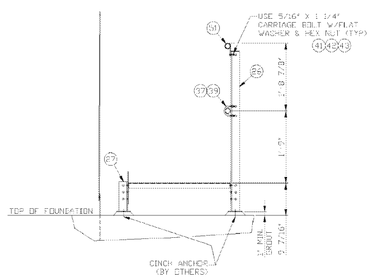

SECTION "E"-"E"

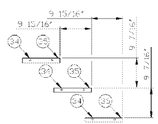

RISER & TREAD DETAIL
DIMENSIONS SHOWN ARE TAKEN AT CENTER OF STAIRWAY

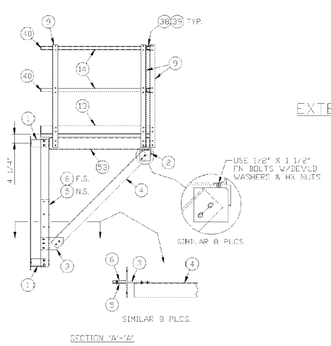

SECTION "A"-"A"

HARDWARE NOTES:

1) USE 1/2" X 1 1/2" PC FN BOLTS W/FLAT WASHERS & HX NUTS AT SUPT. CLIP TANK SIDEWALL.

2) USE 1/2" X 1 3/4" FN BOLTS W/FLAT WASHERS & HX NUTS AT WHERE KNEE BRACE CLIP & SIDWALL SUPT. CLIP IS SANDWICHED BETWEEN SUPT ANGLES.

3) USE 1/2" X 1 1/4" FN BOLTS W/FLAT WASHERS & HX NUTS AT STAIR TREAD TO STRINGER LOCATIONS & STRINGER SPLICE USE 1 1/2" FN BOLTS AT STAIR TREAD TO STRINGER W/ANGLE POST.

4) USE 1/2" X 1 1/2" FN BOLTS W/FLAT WASHERS & HX NUTS AT REMAINING CONNECTIONS UNLESS NOTED OTHERWISE.

NOTE:
EDGE SEAL AT ALL BOLTED CONNECTIONS.

NOTE:
SEE FLAT LAYOUT FOR SIDEWALL DETAILS

THE INFORMATION ON THIS DOCUMENT IS CONFIDENTIAL PROPERTY OF TANK MANUFACTURER AND/OR ITS AFFILIATES. ANY OTHER USE, RETENTION, DISSEMINATION, FORWARDING, PRINTING OR COPYING OF THIS DOCUMENT TO UNAUTHORIZED PARTIES IS STRICTLY PROHIBITED, WITHOUT THE EXPRESSED WRITTEN CONSENT OF TANK MANUFACTURER.

TANK CONNECTION
AFFILIATE GROUP
3609 NORTH 18TH ST. · PARSONS, KANSAS 67357

REV	REVISION	DATE	BY	APP
E				
D				
C				
B				
A	QTY ITEM 1 WAS 14	9/20/11	DJC	MP

DRAWN BY:	DJC	SPIRAL STAIRWAY DETAILS FOR 59' TANK		
DATE:	8/11/11			
REVIEWED BY:	JBB			
DATE:	8/24/11	R	SCALE: NTS	DRAWING NO. STAIR234000P

750,000 GAL. TANK STRUCTURAL SHOP DRAWING

SCALE: N.T.S.

quasar energy group
quasar energy group
7624 Riverview Road
PO Box 31023
Cleveland OH 44141
Phone: 216.986.9999

Scale: SEE DETAIL

This drawing contains valuable confidential and proprietary information that belongs to quasar energy group, llc ("quasar"), and is subject to a separate Confidentiality and Nondisclosure Agreement. quasar is the author and owner of this drawing, and retains all common law, statutory and other rights and privileges with respect hereto, including copyrights. The information contained herein may not at any time be used for any unauthorized purpose, nor reproduced by or provided to any third party, without the prior written consent of quasar.

STATE OF OHIO
ALAN R. JOHNSON
46333
REGISTERED
PROFESSIONAL ENGINEER

AS BUILT

Rev.	ECN Number	Date
2		
1		
0	AS BUILT	__/__/__

Drawing Name:
750K GAL. DIGESTER TANK STRUCTURAL SHOP DRAWING

Project Name and Address:
0058-CAR-OH-11

RINGLER FARMS
ADS Facility
ecoFarmsystem 980

2277 County Road 156
Cardington, OH 43315-9742

Area: _
Author: BR
Calculated: _
Checked: RN
Sheet Number: S-30

© 2012, Quasar Energy Group, LLC. All rights reserved.

P:\SBE Projects\0058-CAR-OH-11 - Ringler Farms\BUILDING DRAWINGS\CURRENT DRAWINGS (AS BUILT)\RINGLER FARMS STRUCTURAL.dwg
11/15/2013 3:38 PM

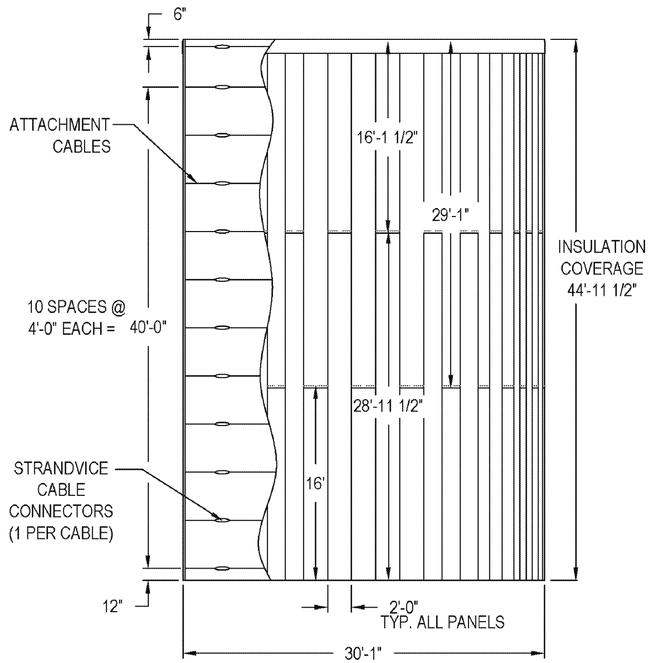

TYPICAL TANK ELEVATION
W/BREAKOUT TO SHOW INTERNAL SECUREMENT

SYSTEM COMPONENTS
SHELL

1. .024 STUCCO EMBOSSED ALUMINUM (REGAL WHITE) SILICONIZED POLYESTER COATING, WITH POLYISOCYANURATE FOAM - DFVSS SHELL - SEE DETAIL "A".
2. 2" THICK [R=12.9] x 24" WIDE DOUBLE FOIL - FACED POLYISOCYANURATE FOAM INSULATION LAMINATED DIRECTLY TO THE JACKET.
3. 3/16" SS ATTACHMENT CABLES, STRAPPED TO TANK SHELL, 4'-0" C-C: TENSIONED AND SECURED WITH HIGH STRENGTH STRANDVICE, SEE DETAIL "B".
4. STAINLESS STEEL CLIPS, ATTACHED TO CABLES WITH S.S. TIE WIRE, AND SECURED WITHIN PANEL SEAMS.

TYPICAL SECTION
AT RIM EDGE

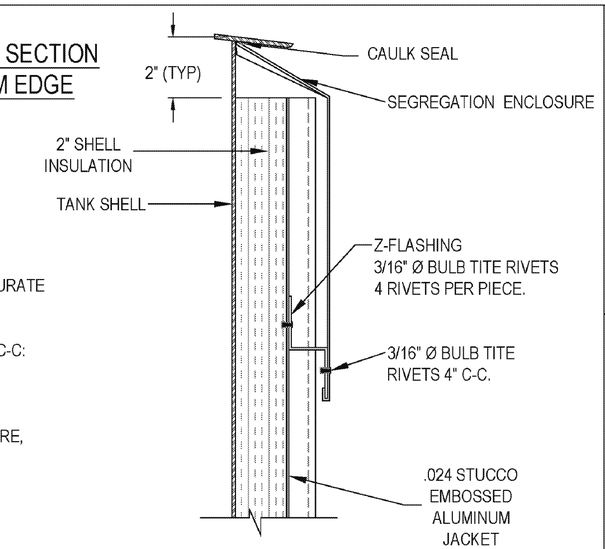

TYPICAL SECTION
AT SHELL PANEL
OVERLAP

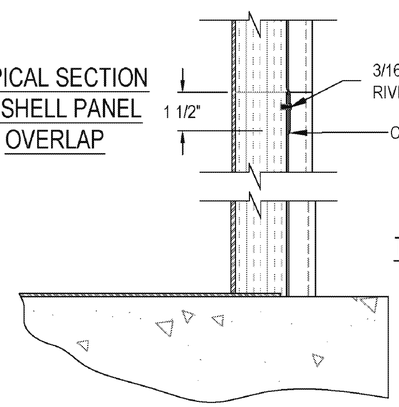

TYPICAL SECTION
AT BASE

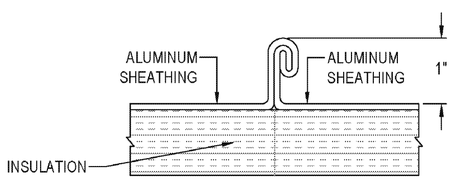

DETAIL "A"
DOUBLE FOLDED SEAM

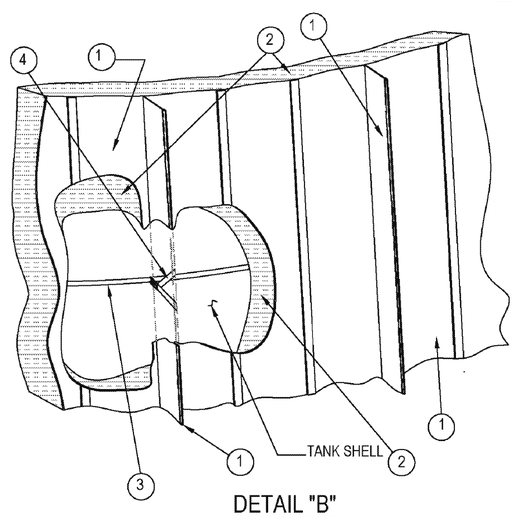

DETAIL "B"

SCALE: NTS

NO:	Date:	BY:	Revision:

FOR APPROVAL NOT FOR CONSTRUCTION	
ACCEPTED	REJECTED
ACCEPTED AS NOTED	RESUBMIT AS NOTED

PLAN AND ELEVATION
SHELL ONLY

29'-8 1/2"Ø x 45'-1 7/16"H.
BOLTED FLAT LAPPED CRT

QUASAR ENERGY GROUP
CARDINGTON, OH

SO NUMBER: 376
CHECKED BY:
DATE: 8/21/12
DRAWN BY: AL

COMPANY CONFIDENTIAL
This document containing proprietary information of Global Therm is transmitted to you in confidence and trust and is to be returned upon request. Its contents may not be disclosed in whole or in part to others or used for other than the purpose for which transmitted without the prior written permission of Global Therm.

Specialty Insulation Systems
5897 State highway 59
Goodman, MO 64843

SSO-376-1-2

230,000 GAL. TANK INSULATION SHOP DRAWING
SCALE: N.T.S.

quasar energy group
quasar energy group
7624 Riverview Road
PO Box 31023
Cleveland OH 44141
Phone: 216.986.9999

Scale: SEE DETAIL

This drawing contains valuable confidential and proprietary information that belongs to quasar energy group, llc ("quasar"), and is subject to a separate Confidentiality and Nondisclosure Agreement. quasar is the author and owner of this drawing, and retains all common law, statutory and other rights and privileges with respect hereto, including copyrights. The information contained herein may not at any time be used for any unauthorized purpose, nor reproduced by or provided to any third party, without the prior written consent of quasar.

STATE OF OHIO
ALAN R. JOHNSON
46333
REGISTERED
PROFESSIONAL ENGINEER

AS BUILT

Rev.	ECN Number	Date
2		
1		
0	AS BUILT	__/__/__

Drawing Name
230K GAL. BIOMASS EQUALIZATION TANK INSULATION SHOP DRAWING

Project Name and Address:
0058-CAR-OH-11

RINGLER FARMS
ADS Facility
ecoFarmsystem 980

2277 County Road 156
Cardington, OH 43315-9742

Area: _
Author: BR
Calculated: _
Checked: RN
Sheet Number: S-31

© 2012, Quasar Energy Group, LLC. All rights reserved.

P:\SBE Projects\0058-CAR-OH-11 - Ringler Farms\BUILDING DRAWINGS\CURRENT DRAWINGS (AS BUILT)\RINGLER FARMS STRUCTURAL.dwg
11/15/2013 3:39 PM

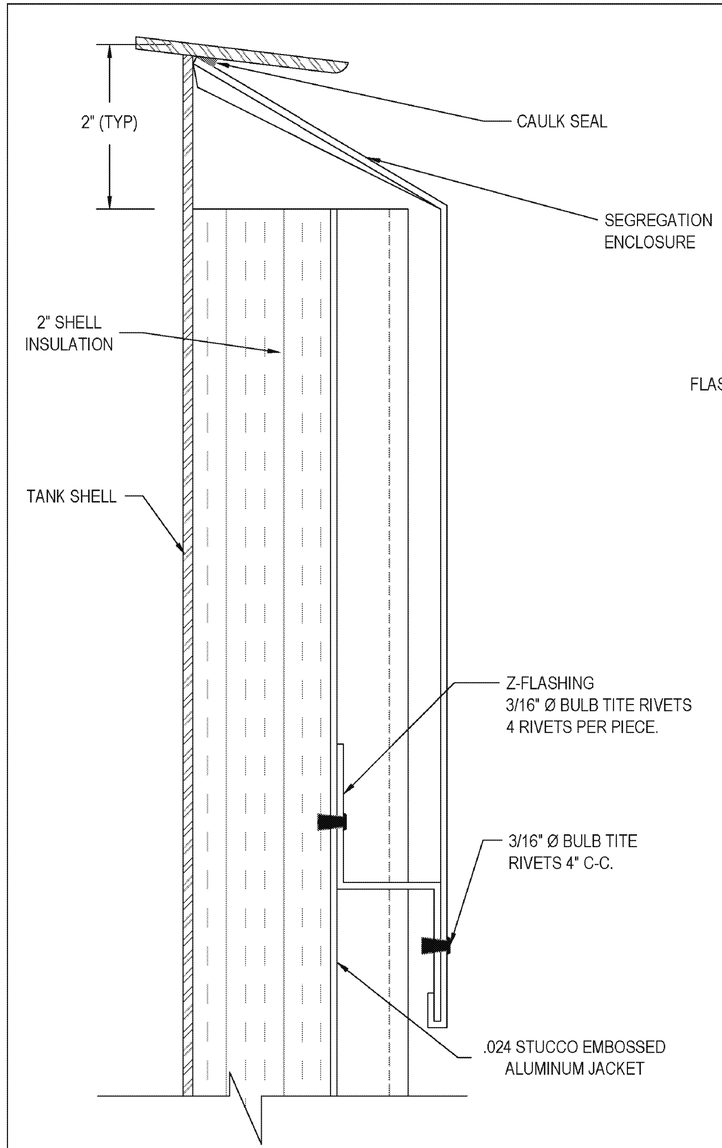

TYPICAL SECTION AT RIM EDGE

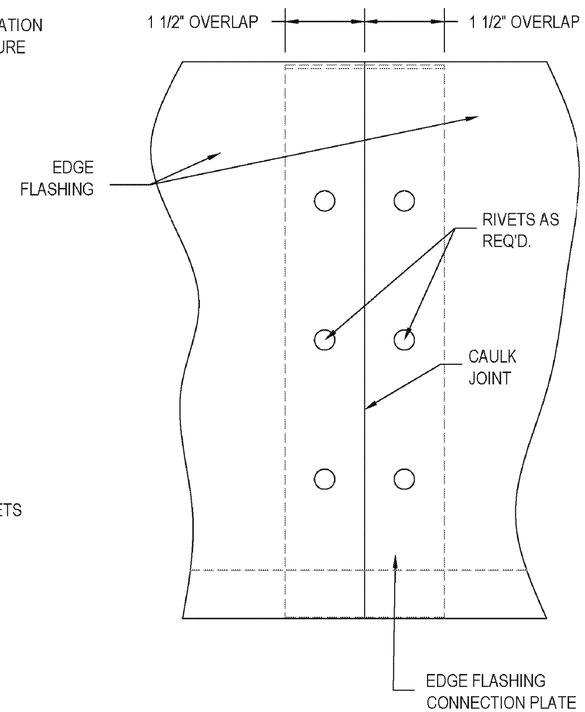

TYPICAL EDGE FLASHING CONNECTION JOINT

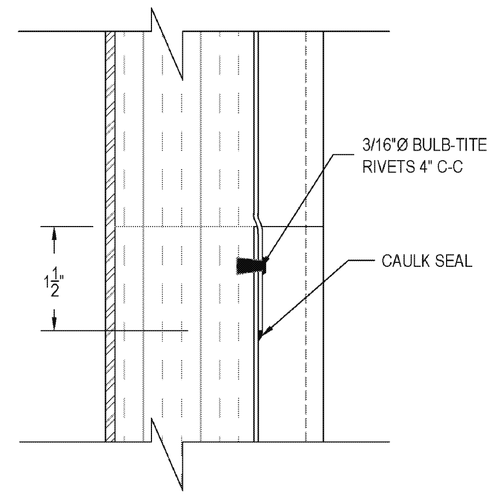

TYPICAL SECTION AT SHELL PANEL OVERLAP

SCALE: NTS

NO:	Date:	BY:	Revision:

FOR APPROVAL NOT FOR CONSTRUCTION	
ACCEPTED	REJECTED
ACCEPTED AS NOTED	RESUBMIT AS NOTED

FLASHING DETAILS SHELL ONLY

29'-8 1/2"Ø x 45'-1 7/16"H. BOLTED FLAT LAPPED CRT

QUASAR ENERGY GROUP CARDINGTON, OH

DATE: 8/21/12 | CHECKED BY: | SO NUMBER: 376

DRAWN BY: AL

COMPANY CONFIDENTIAL
This document containing proprietary information of Global Therm is transmitted to you in confidence and trust and is to be returned upon request. Its contents may not be disclosed in whole or in part to others or used for other than the purpose for which transmitted without the prior written permission of Global Therm.

Global Therm

Specialty Insulation Systems
5897 State highway 59
Goodman, MO 64843

SSO-376-2-2

230,000 GAL. TANK INSULATION SHOP DRAWING
SCALE: N.T.S.

quasar energy group
quasar energy group
7624 Riverview Road
PO Box 31023
Cleveland OH 44141
Phone: 216.986.9999

Scale: SEE DETAIL

This drawing contains valuable confidential and proprietary information that belongs to quasar energy group, llc ("quasar"), and is subject to a separate Confidentiality and Nondisclosure Agreement. quasar is the author and owner of this drawing, and retains all common law, statutory and other rights and privileges with respect hereto, including copyrights. The information contained herein may not at any time be used for any unauthorized purpose, nor reproduced by or provided to any third party, without the prior written consent of quasar.

STATE OF OHIO
ALAN R. JOHNSON
46333
REGISTERED
PROFESSIONAL ENGINEER

AS BUILT

Rev.	ECN Number	Date
2		
1		
0	AS BUILT	__/__/__

Drawing Name:
230K GAL. BIOMASS EQUALIZATION TANK INSULATION SHOP DRAWING

Project Name and Address:
0058-CAR-OH-11

RINGLER FARMS
ADS Facility
ecoFarmsystem 980

2277 County Road 156
Cardington, OH 43315-9742

Area: _
Author: BR
Calculated: _
Checked: RN
Sheet Number: S-32

P:\SBE Projects\0058-CAR-OH-11 - Ringler Farms\BUILDING DRAWINGS\CURRENT DRAWINGS (AS BUILT)\RINGLER FARMS STRUCTURAL.dwg
11/15/2013 3:38 PM

© 2012, Quasar Energy Group, LLC. All rights reserved.

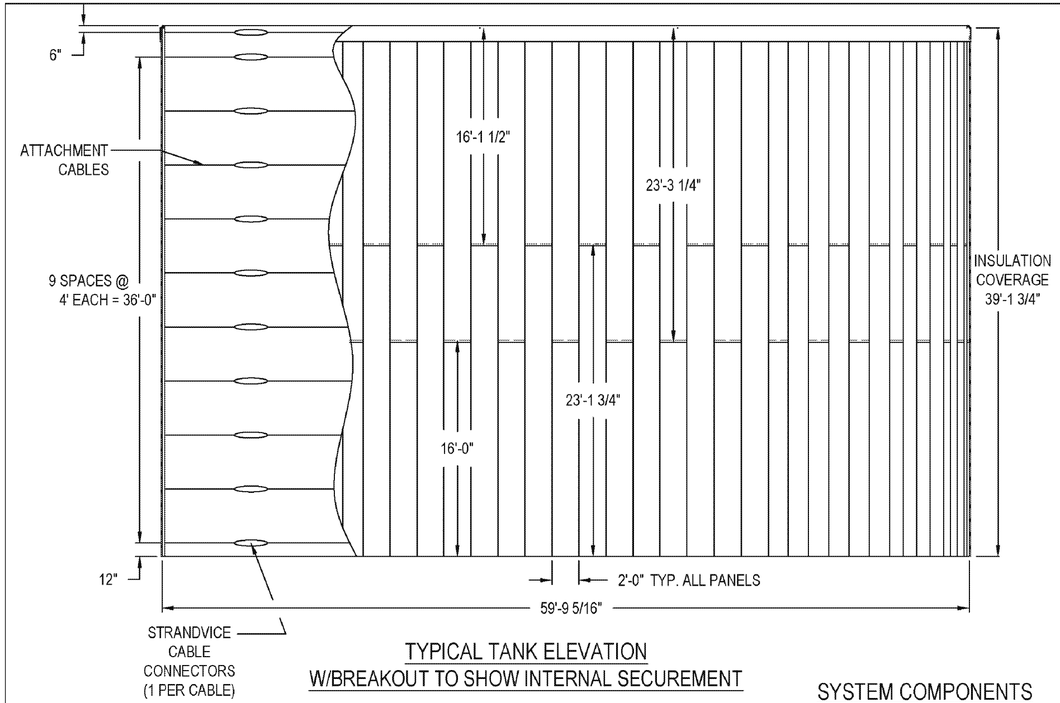

TYPICAL TANK ELEVATION
W/BREAKOUT TO SHOW INTERNAL SECUREMENT

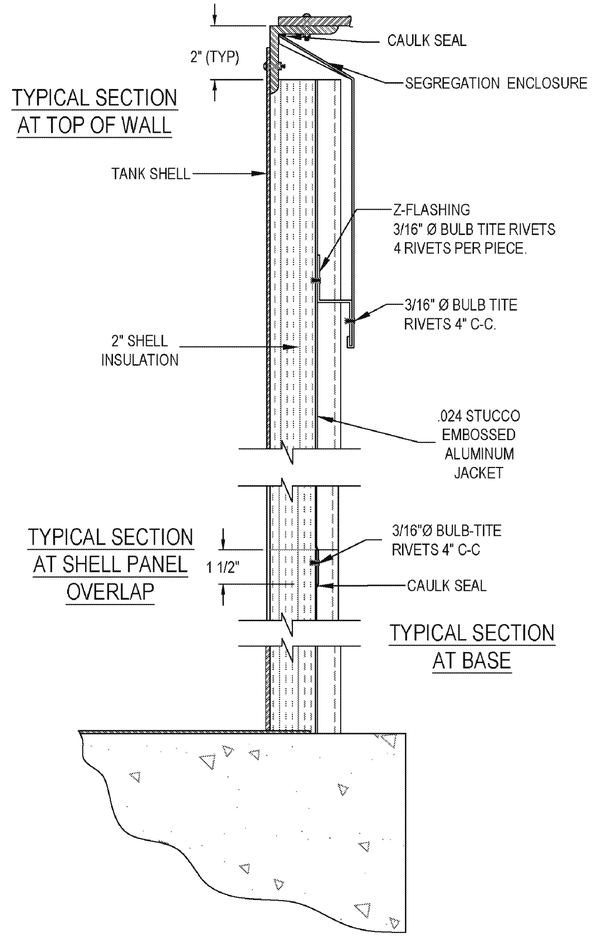

SYSTEM COMPONENTS
SHELL

1. .024 STUCCO EMBOSSED ALUMINUM (REGAL WHITE) SILICONIZED POLYESTER COATING , WITH POLYISOCYANURATE FOAM - DFVSS SHELL - SEE DETAIL "A".
2. 2" THICK [R=12.9] x 24" WIDE DOUBLE FOIL - FACED POLYISOCYANURATE FOAM INSULATION LAMINATED DIRECTLY TO THE JACKET.
3. 3/16" SS ATTACHMENT CABLES, STRAPPED TO TANK SHELL, 4'-0" C-C: TENSIONED AND SECURED WITH HIGH STRENGTH STRANDVICE, SEE DETAIL "B".
4. STAINLESS STEEL CLIPS, ATTACHED TO CABLES WITH S.S. TIE WIRE, AND SECURED WITHIN PANEL SEAMS.

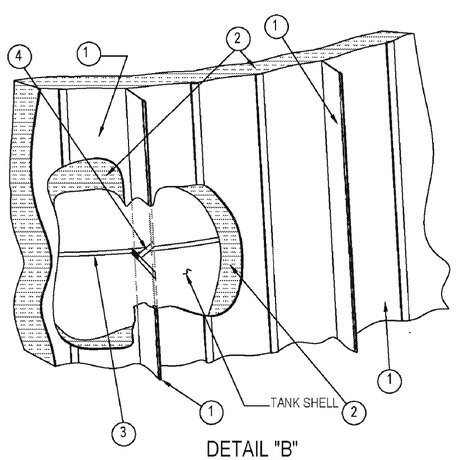

DETAIL "B"

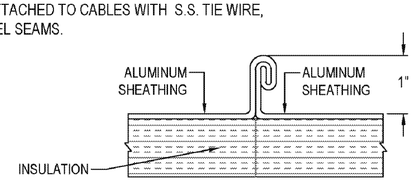

DETAIL "A"
DOUBLE FOLDED SEAM

SCALE: NTS

NO:	Date:	BY:	Revision:

FOR APPROVAL NOT FOR CONSTRUCTION

ACCEPTED	REJECTED
ACCEPTED AS NOTED	RESUBMIT AS NOTED

PLAN AND ELEVATION
SHELL ONLY

59'-5"Ø x 39'-3 13/16"H.
BOLTED FLAT LAPPED CRT

QUASAR ENERGY GROUP
CARDINGTON, OH

SO NUMBER: 376
CHECKED BY:
DATE: 8/21/12
DRAWN BY: AL

COMPANY CONFIDENTIAL
This document containing proprietary information of Global Therm is transmitted to you in confidence and trust and is to be returned upon request. Its contents may not be disclosed in whole or in part to others or used for other than the purpose for which transmitted without the prior written permission of Global Therm.

Specialty Insulation Systems
5897 State highway 59
Goodman, MO 64843

SSO-376-1-2

750,000 GAL. TANK INSULATION SHOP DRAWING
SCALE: N.T.S.

quasar energy group
quasar energy group
7624 Riverview Road
PO Box 31023
Cleveland OH 44141
Phone: 216.986.9999

Scale: SEE DETAIL

This drawing contains valuable confidential and proprietary information that belongs to quasar energy group, llc ("quasar"), and is subject to a separate Confidentiality and Nondisclosure Agreement. quasar is the author and owner of this drawing, and retains all common law, statutory and other rights and privileges with respect hereto, including copyrights. The information contained herein may not at any time be used for any unauthorized purpose, nor reproduced by or provided to any third party, without the prior written consent of quasar.

STATE OF OHIO
ALAN R. JOHNSON
46333
REGISTERED
PROFESSIONAL ENGINEER

AS BUILT

Rev.	ECN Number	Date
2		
1		
0	AS BUILT	__/__/__

Drawing Name:
750K GAL. DIGESTER TANK INSULATION SHOP DRAWING

Project Name and Address:
0058-CAR-OH-11

RINGLER FARMS
ADS Facility
ecoFarmsystem 980

2277 County Road 156
Cardington, OH 43315-9742

Area: --
Author: BR
Calculated: --
Checked: RN
Sheet Number: S-33

© 2012, Quasar Energy Group, LLC. All rights reserved.

P:\SBE Projects\0058-CAR-OH-11 - Ringler Farms\BUILDING DRAWINGS\CURRENT DRAWINGS (AS BUILT)\RINGLER FARMS STRUCTURAL.dwg
11/15/2013 3:37 PM

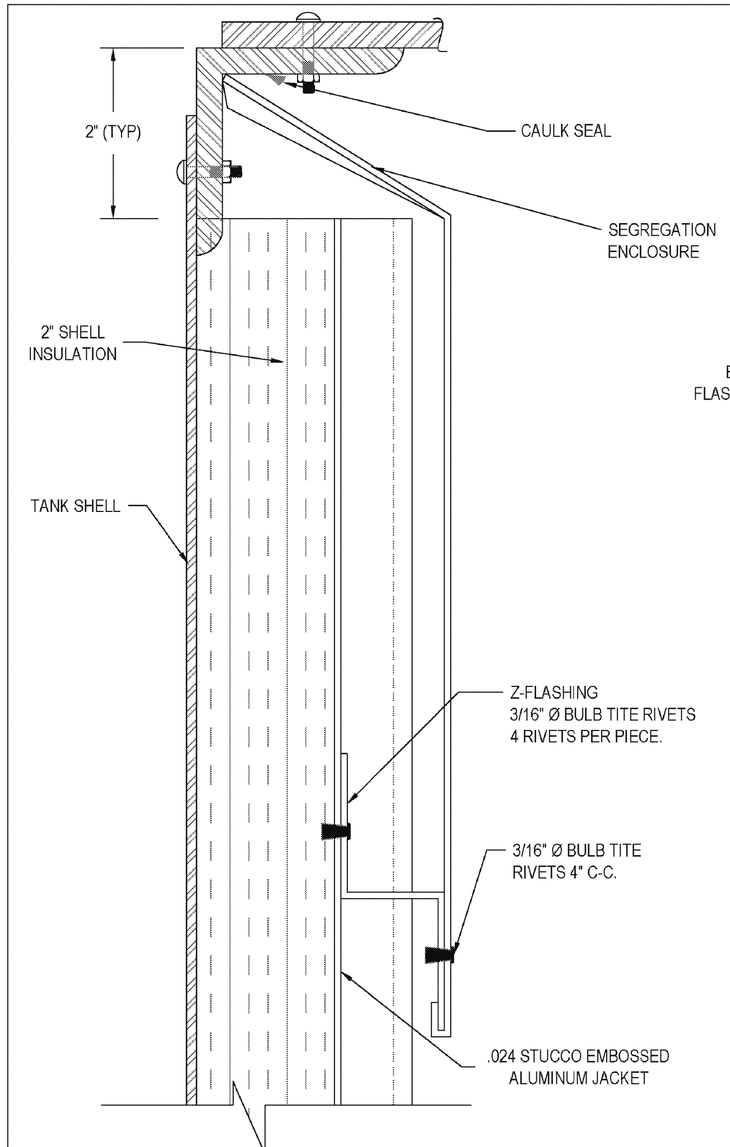

TYPICAL SECTION
AT RIM EDGE

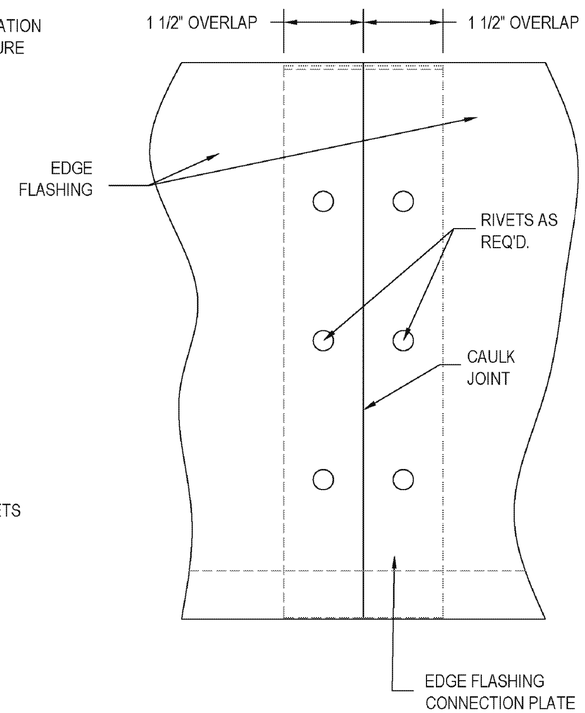

TYPICAL EDGE FLASHING
CONNECTION JOINT

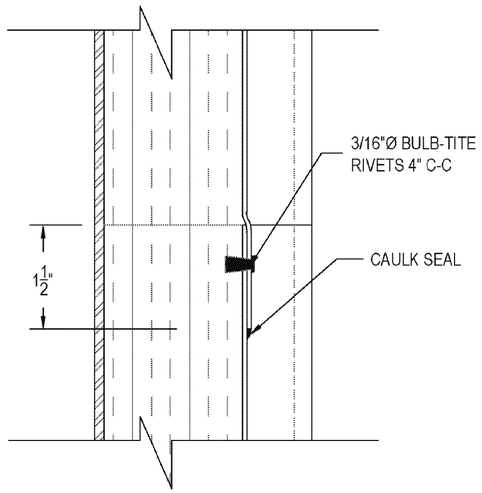

TYPICAL SECTION AT
SHELL PANEL OVERLAP

SCALE: NTS

NO:	Date:	BY:	Revision:

FOR APPROVAL NOT FOR CONSTRUCTION	
ACCEPTED	REJECTED
ACCEPTED AS NOTED	RESUBMIT AS NOTED

FLASHING DETAILS
SHELL ONLY

SO NUMBER: 376

CHECKED BY:

DATE: 8/21/12

DRAWN BY: AL

59'-5"Ø x 39'-3 13/16"H.
BOLTED FLAT LAPPED CRT

QUASAR ENERGY GROUP
CARDINGTON, OH

COMPANY CONFIDENTIAL
This document containing proprietary information of Global Therm is transmitted to you in confidence and trust and is to be returned upon request. Its contents may not be disclosed in whole or in part to others or used for other than the purpose for which transmitted without the prior written permission of Global Therm.

Specialty Insulation Systems
5897 State highway 59
Goodman, MO 64843

SSO-376-2-2

750,000 GAL. TANK INSULATION SHOP DRAWING
SCALE: N.T.S.

quasar energy group
quasar energy group
7624 Riverview Road
PO Box 31023
Cleveland OH 44141
Phone: 216.986.9999

Scale: SEE DETAIL

This drawing contains valuable confidential and proprietary information that belongs to quasar energy group, llc ("quasar"), and is subject to a separate Confidentiality and Nondisclosure Agreement. quasar is the author and owner of this drawing, and retains all common law, statutory and other rights and privileges with respect hereto, including copyrights. The information contained herein may not at any time be used for any unauthorized purpose, nor reproduced by or provided to any third party, without the prior written consent of quasar.

STATE OF OHIO
ALAN R. JOHNSON
46333
REGISTERED
PROFESSIONAL ENGINEER

AS BUILT

Rev.	ECN Number	Date
2		
1		
0	AS BUILT	__/__/__

Drawing Name:
750K GAL. DIGESTER
TANK INSULATION
SHOP DRAWING

Project Name and Address:
0058-CAR-OH-11

RINGLER FARMS
ADS Facility
ecoFarmsystem 980

2277 County Road 156
Cardington, OH 43315-9742

Area: _
Author: BR
Calculated: _
Checked: RN
Sheet Number: S-34

P:\SBE Projects\0058-CAR-OH-11 - Ringler Farms\BUILDING DRAWINGS\CURRENT DRAWINGS (AS BUILT)\RINGLER FARMS STRUCTURAL.dwg
11/15/2013 3:37 PM

© 2012, Quasar Energy Group, LLC. All rights reserved.

OBC NOTES

Code Summary Report

Proposed Building
Ringler Farms Energy, LLC
Project address: 2277 County Road 156
Cardington, OH 43315-9742

Applicable Code: Ohio Building Code, 2007 Edition based on IBC (International Building Code, 2006)

Chapter 3: Use and Occupancy Classification

306.2 Factory Industrial F-1 Moderate-Hazard Occupancy.

Factory industrial uses which are not classified as Factory Industrial F-2 Low Hazard shall be classified as F-1 Moderate Hazard and shall include, but not be limited to, the following:

Construction and agricultural machinery
Machinery

Use Group: F-1, Factory (moderate)

Square footage: Total 2,356 SF

Chapter 5: General Building Heights and Areas

TABLE 503
ALLOWABLE HEIGHT AND BUILDING AREAS
Height limitations shown as stories and feet above grade plane.
Area limitations as determined by the definition of "Area, building," per floor.

TYPE OF CONSTRUCTION - II - B

Group		55'
F-1	S	2
	A	15,500

Chapter 6: Types of Construction

Construction Type: 2-B, non-combustible unprotected

TABLE 601
FIRE-RESISTANCE RATING REQUIREMENTS FOR BUILDING ELEMENTS (hours)

Building Element:		Type II - B
Structural frame - including columns, girders, trusses:		0
Bearing walls	Exterior:	0
	Interior:	0
Nonbearing walls and partitions	Exterior:	See Table 602
Nonbearing walls and partitions	Interior:	0
Floor construction - including supporting beams and joists:		0
Roof construction - including supporting beams and joists:		0

Chapter 10: Means of Egress

TABLE 1004.1.2 - MAXIMUM FLOOR AREA ALLOWANCES PER OCCUPANT

OCCUPANCY	FLOOR AREA IN SQ. FT. PER OCCUPANT
Agricultural building	300 gross
Industrial areas	100 gross
Accessory storage areas, mechanical equipment room	300 gross
Warehouses	500 gross

Occupant Load for Ringler Farms project = 2,356 SF ÷ 300 SF/occupant = 8 occupants

1014.1 Exit or exit access doorways required. Two exits or exit access doorways from any space shall be provided where one of the following conditions exists:

1. The occupant load of the space exceeds the values in Table 1014.1.
2. The common path of egress travel exceeds the limitations of Section 1013.3.
3. Where required by Sections 1014.3, 1014.4 and 1014.5.

Exception: Group I-2 occupancies shall comply with Section 1013.2.2.

TABLE 1014.1 - SPACES WITH ONE MEANS OF EGRESS

OCCUPANCY	MAXIMUM OCCUPANT LOAD
A, B, E, F, M, U	50
H-1, H-2, H-3	3
H-4, H-5, I-1, I-3, I-4, R	10
S	30

TABLE 1018.2 - BUILDINGS WITH ONE EXIT

OCCUPANCY	MAXIMUM HEIGHT OF DWELLING UNITS) BUILDING ABOVE GRADE PLANE	MAXIMUM OCCUPANTS (OR PER FLOOR AND TRAVEL DISTANCE
A, Bd, E, F, M, U	1 Story	50 occupants and 75 feet travel distance
H-2, H-3	1 Story	3 occupants and 25 feet travel distance
H-4, H-5, I, R	1 Story	10 occupants and 75 feet travel distance
Sa	1 Story	30 occupants and 100 feet travel distance
Bb, F, M, Sa	2 Stories	30 occupants and 75 feet travel distance
R-2	2 Stories	4 dwelling units and 50 feet travel distance

Chapter 11: Accessibility

TABLE 1106.1 - ACCESSIBLE PARKING SPACES

TOTAL PARKING SPACES PROVIDED	REQUIRED MINIMUM NUMBER OF ACCESSIBLE SPACES
1 to 25	1
26 to 50	2
51 to 75	3
76 to 100	4
101 to 150	5
151 to 200	6
201 to 300	7
301 to 400	8
401 to 500	9
501 to 1,000	2% of total
More than 1,000	20, plus one for each 100 over 1,000

Chapter 29: Plumbing Requirements

TABLE 2902.1 - MINIMUM NUMBER OF REQUIRED PLUMBING FACILITIES

CLASSIFICATION:	Factory and industrial
USE GROUP:	F-1 and F-2
DESCRIPTION: fabricating, assembly	Structures in which occupants are engaged in work or processing of products or materials
WATER CLOSETS M & F:	1 per 100
LAVATORIES M & F:	1 per 100
BATHTUB OR SHOWER:	See Section 411 of the plumbing code
DRINKING FOUNTAINS: (SEE SECTION 410.1 OF THE PLUMBING CODE)	1 per 400
OTHER:	1 service sink

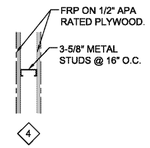

FULL HEIGHT PARTITION
SCALE: 3/4"=1'-0"

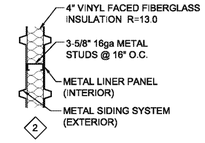

SOLIDS RECEIVING PIT STAIR WELL
SCALE: 3/4"=1'-0"

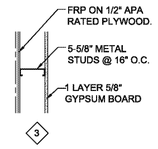

FULL HEIGHT PARTITION
SCALE: 3/4"=1'-0"

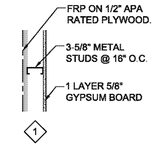

FULL HEIGHT PARTITION
SCALE: 3/4"=1'-0"

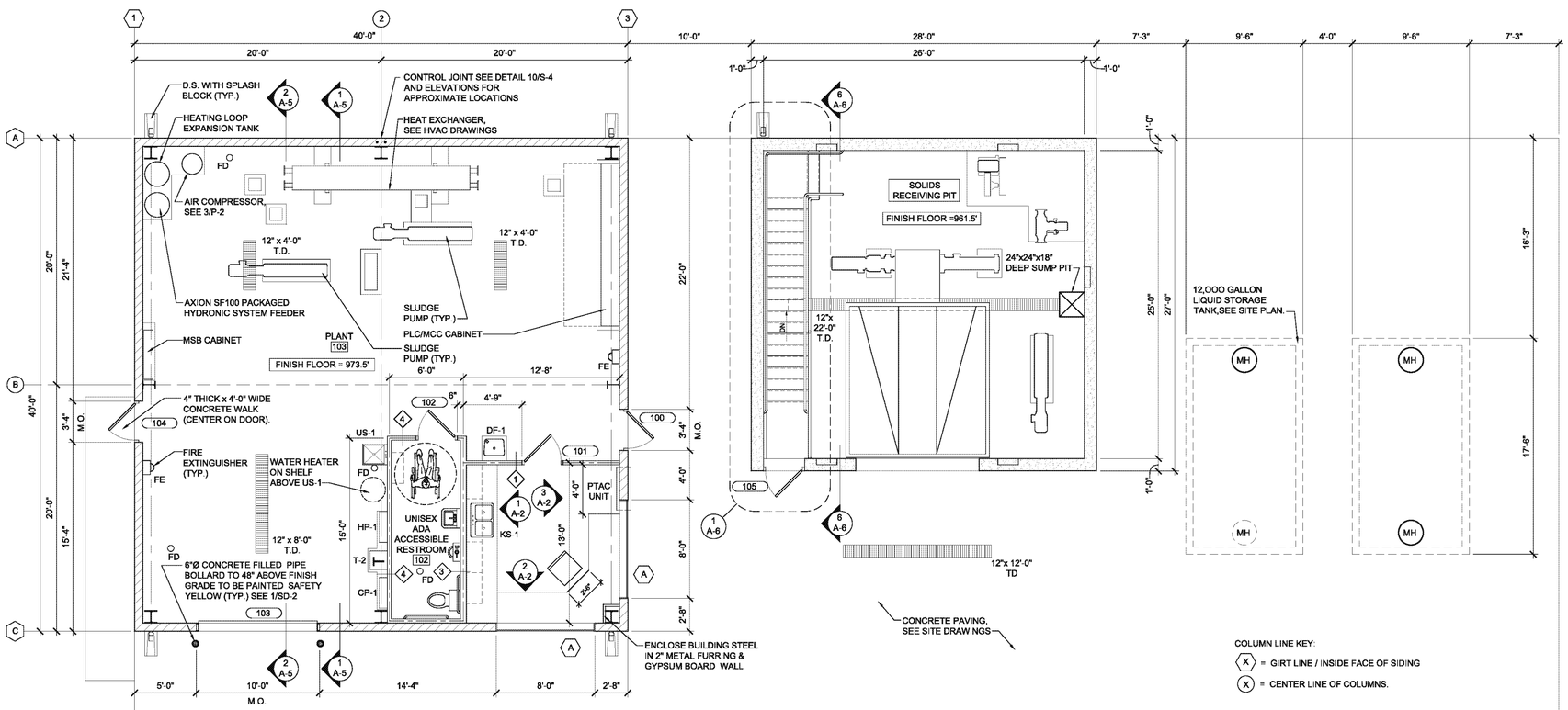

FLOOR PLAN
SCALE: 3/16"=1'-0"

quasar energy group
7624 Riverview Road
PO Box 31023
Cleveland OH 44141
Phone: 216.986.9999

Scale: SEE DETAIL

This drawing contains valuable confidential and proprietary information that belongs to quasar energy group, llc ("quasar"), and is subject to a separate Confidentiality and Nondisclosure Agreement. quasar is the author and owner of this drawing, and retains all common law, statutory and other rights and privileges with respect hereto, including copyrights. The information contained herein may not at any time be used for any unauthorized purpose, nor reproduced by or provided to any third party, without the prior written consent of quasar.

STATE OF OHIO
ALAN R. JOHNSON
46333
REGISTERED
PROFESSIONAL ENGINEER

AS BUILT

Rev.	ECN Number	Date
2		
1		
0	AS BUILT	__/__/__

Drawing Name:
FLOOR PLAN

Project Name and Address:
0058-CAR-OH-11

RINGLER FARMS
ADS Facility
ecoFarmsystem 980

2277 County Road 156
Cardington, OH 43315-9742

Area:
Author: RAMII
Calculated:
Checked: RN
Sheet Number: A-1

© 2012, Quasar Energy Group, LLC. All rights reserved.

P:\SBE Projects\0058-CAR-OH-11 - Ringler Farms\BUILDING DRAWINGS\CURRENT DRAWINGS (AS BUILT)\RINGLER FARMS ARCHITECTURAL.dwg
11/15/2013 2:21 PM

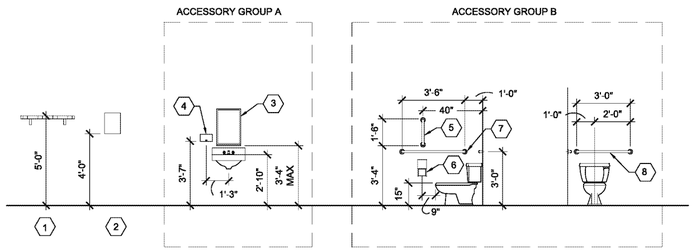

TOILET ACCESSORIES

SCALE: 1/4"=1'-0"

TOILET ACCESSORY LEGEND

1. MOP AND BROOM HOLDER
2. SURFACE MOUNTED PAPER TOWEL DISPENSER
3. MIRROR - TYPE 2 (16X24 W/ SHELF)
4. SURFACE MOUNTED SOAP DISPENSER
5. VERTICAL GRAB BAR
6. TOILET TISSUE DISPENSER
7. 42" GRAB BAR
8. 36" GRAB BAR

GENERAL NOTES

1. PROVIDE FIRE RETARDANT TREATED WOOD BLOCKING BEHIND ALL WALL MOUNTED ACCESSORIES AS REQUIRED. MOUNT WITH CONCEALED FASTENERS

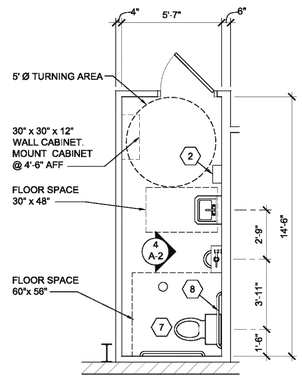

ENLARGED RESTROOM PLAN

SCALE: 1/4"=1'-0"

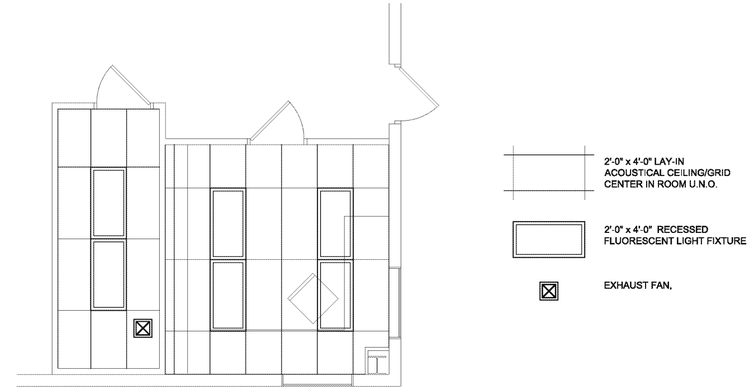

REFLECTED CEILING PLAN

SCALE: 1/4"=1'-0"

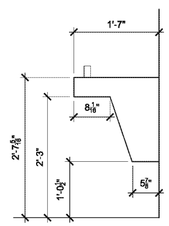

5 ADA WATER COOLER ELEVATION

SCALE: 3/4"=1'-0"

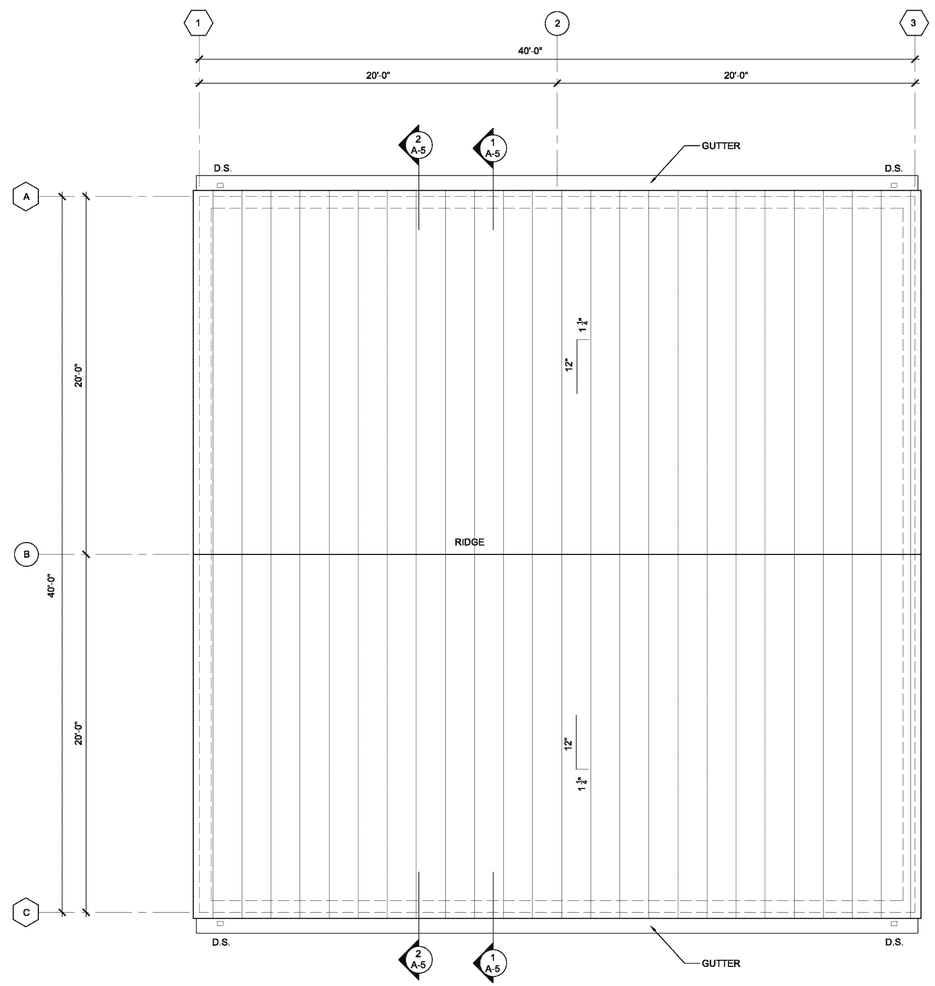

ROOF PLAN

SCALE: 1/4"=1'-0"

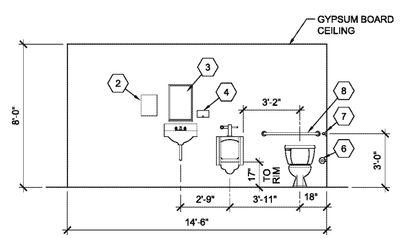

4 RESTROOM ELEVATIONS

SCALE: 1/4"=1'-0"

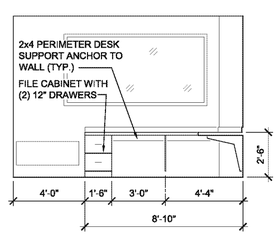

3 OFFICE ELEVATIONS

SCALE: 1/4"=1'-0"

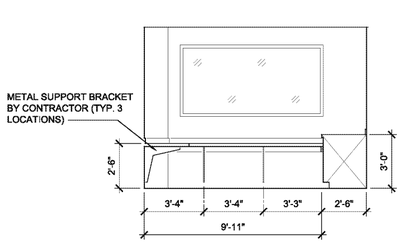

2 OFFICE ELEVATIONS

SCALE: 1/4"=1'-0"

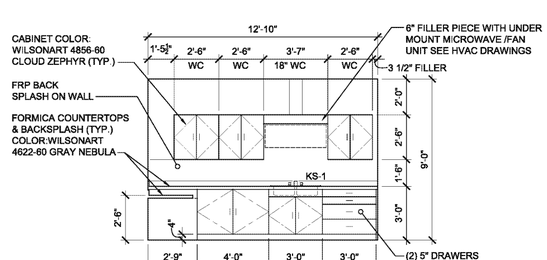

1 OFFICE ELEVATIONS

SCALE: 1/4"=1'-0"

quasar energy group

quasar energy group
7624 Riverview Road
PO Box 31023
Cleveland OH 44141
Phone: 216.986.9999

Scale: SEE DETAIL

This drawing contains valuable confidential and proprietary information that belongs to quasar energy group, llc ("quasar"), and is subject to a separate Confidentiality and Nondisclosure Agreement. quasar is the author and owner of this drawing, and retains all common law, statutory and other rights and privileges with respect hereto, including copyrights. The information contained herein may not at any time be used for any unauthorized purpose, nor reproduced by or provided to any third party, without the prior written consent of quasar.

STATE OF OHIO
ALAN R. JOHNSON
46333
REGISTERED PROFESSIONAL ENGINEER

AS BUILT

Rev.	ECN Number	Date
2		
1		
0	AS BUILT	__/__/__

Drawing Name:

ROOF PLAN
REFLECTED CEILING PLAN
RESTROOM DETAILS

Project Name and Address:

0058-CAR-OH-11

RINGLER FARMS
ADS Facility
ecoFarmsystem 980

2277 County Road 156
Cardington, OH 43315-9742

Area:

Author: RAMII

Calculated:

Checked: RN

Sheet Number: A-2

P:\SBE Projects\0058-CAR-OH-11 - Ringler Farms\BUILDING DRAWINGS\CURRENT DRAWINGS (AS BUILT)\RINGLER FARMS ARCHITECTURAL.dwg
11/15/2013 2:21 PM

© 2012, Quasar Energy Group, LLC. All rights reserved.

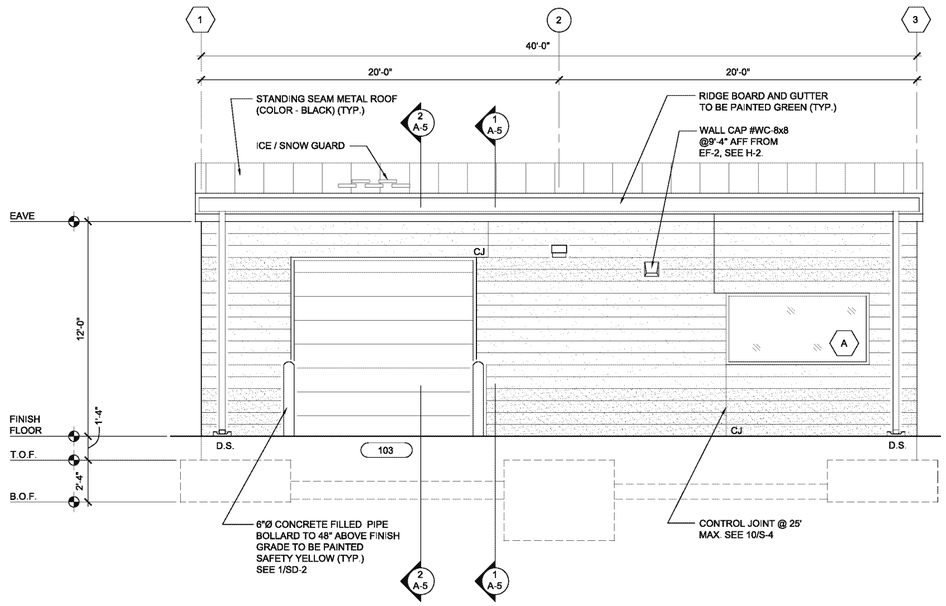

SOUTH ELEVATION

SCALE: 1/4"=1'-0"

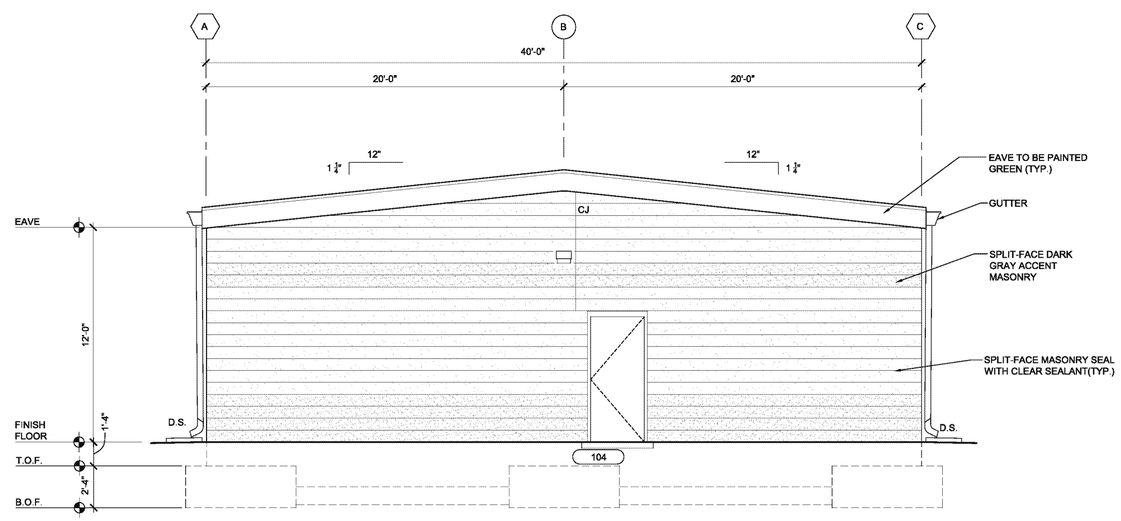

WEST ELEVATION

SCALE: 1/4"=1'-0"

quasar energy group

quasar energy group
7624 Riverview Road
PO Box 31023
Cleveland OH 44141
Phone: 216.986.9999

Scale: SEE DETAIL

This drawing contains valuable confidential and proprietary information that belongs to quasar energy group, llc ("quasar"), and is subject to a separate Confidentiality and Nondisclosure Agreement. quasar is the author and owner of this drawing, and retains all common law, statutory and other rights and privileges with respect hereto, including copyrights. The information contained herein may not at any time be used for any unauthorized purpose, nor reproduced by or provided to any third party, without the prior written consent of quasar.

STATE OF OHIO
ALAN R. JOHNSON
46333
REGISTERED PROFESSIONAL ENGINEER

AS BUILT

Rev.	ECN Number	Date
2		
1		
0	AS BUILT	__/__/__

Drawing Name:

ELEVATIONS

Project Name and Address:

0058-CAR-OH-11

RINGLER FARMS
ADS Facility
ecoFarmsystem 980

2277 County Road 156
Cardington, OH 43315-9742

Area:

Author: RAMII

Calculated:

Checked: RN

Sheet Number: A-3

© 2012, Quasar Energy Group, LLC. All rights reserved.

P:\SSE Projects\0058-CAR-OH-11 - Ringler Farms\BUILDING DRAWINGS\CURRENT DRAWINGS (AS BUILT)\RINGLER FARMS ARCHITECTURAL .dwg
11/15/2013 2:21 PM

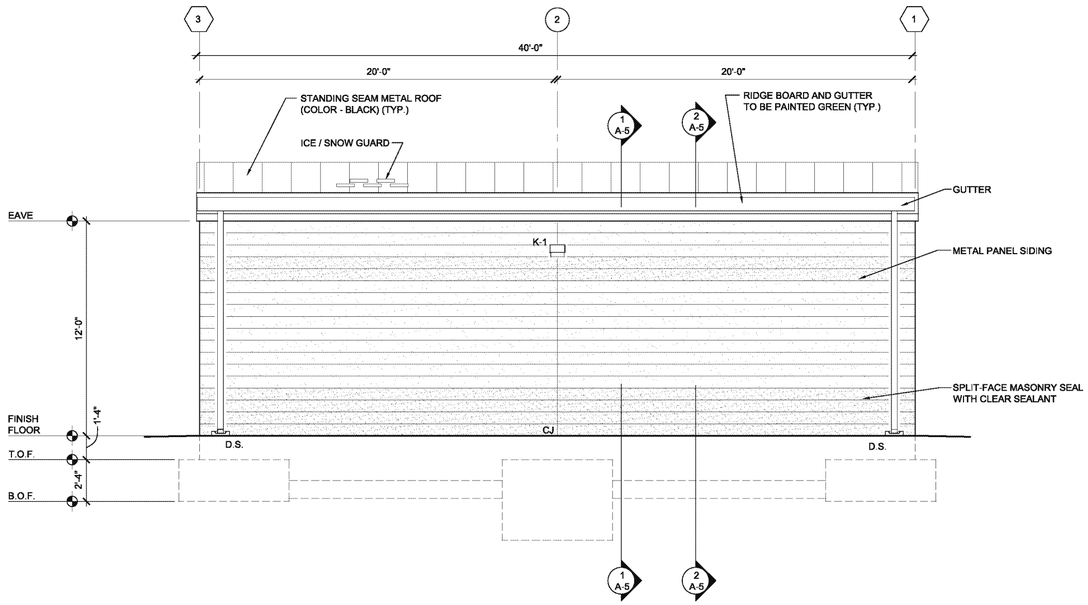

NORTH ELEVATION

SCALE: 1/4"=1'-0"

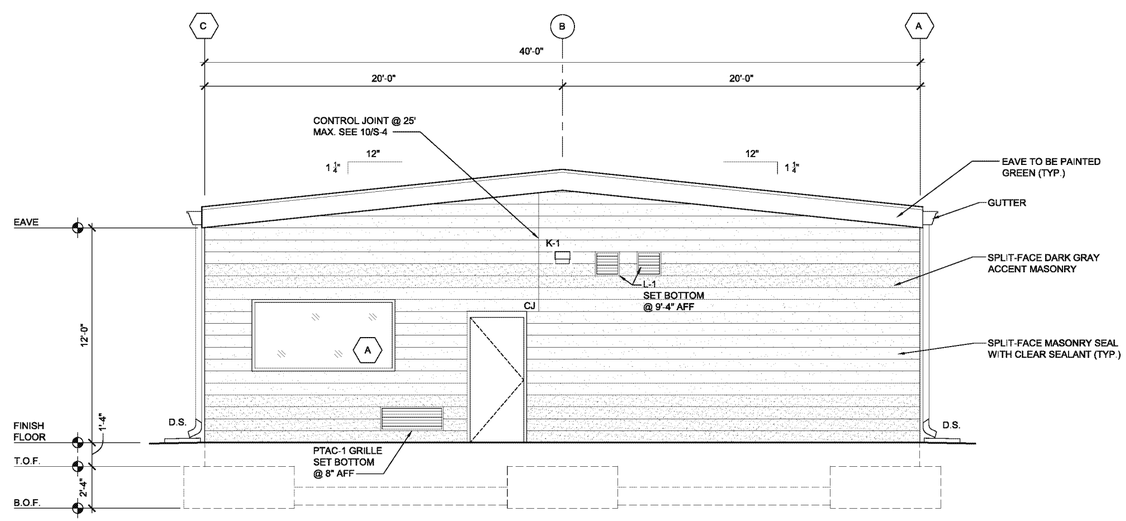

WEST ELEVATION

SCALE: 1/4"=1'-0"

quasar energy group

quasar energy group
7624 Riverview Road
PO Box 31023
Cleveland OH 44141
Phone: 216.986.9999

Scale: SEE DETAIL

This drawing contains valuable confidential and proprietary information that belongs to quasar energy group, llc ("quasar"), and is subject to a separate Confidentiality and Nondisclosure Agreement. quasar is the author and owner of this drawing, and retains all common law, statutory and other rights and privileges with respect hereto, including copyrights. The information contained herein may not at any time be used for any unauthorized purpose, nor reproduced by or provided to any third party, without the prior written consent of quasar.

STATE OF OHIO
ALAN R. JOHNSON
46333
REGISTERED PROFESSIONAL ENGINEER

AS BUILT

Rev.	ECN Number	Date
2		
1		
0	AS BUILT	__/__/__

Drawing Name:

ELEVATIONS

Project Name and Address:

0058-CAR-OH-11

RINGLER FARMS
ADS Facility
ecoFarmsystem 980

2277 County Road 156
Cardington, OH 43315-9742

Area:

Author: RAMII

Calculated:

Checked: RN

Sheet Number: A-4

© 2012, Quasar Energy Group, LLC. All rights reserved.

P:\SSE Projects\0058-CAR-OH-11 - Ringler Farms\BUILDING DRAWINGS\CURRENT DRAWINGS (AS BUILT)\RINGLER FARMS ARCHITECTURAL .dwg
11/15/2013 2:20 PM

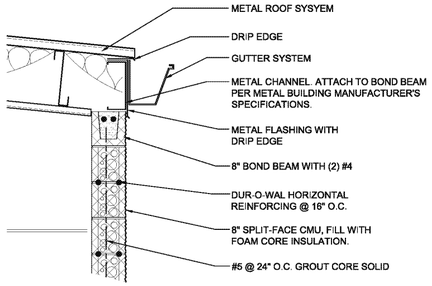

3 TOP OF MASONRY WALL DETAIL

SCALE: 3/4"=1'-0"

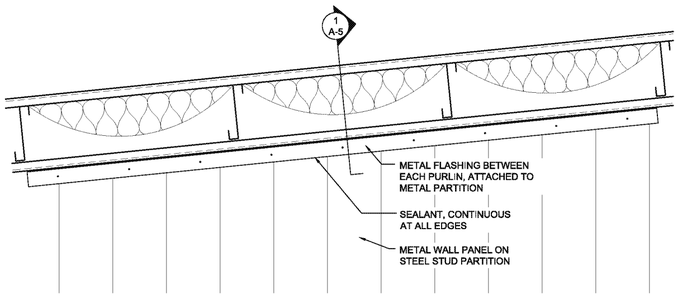

4 INT. WALL/ROOF CONNECTION DETAIL @ WALLS PERP. TO PURLINS

SCALE: 3/4"=1'-0"

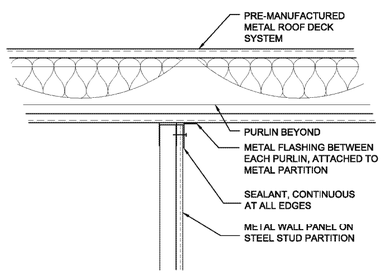

5 SECTION THRU WALL/ROOF CONNECTION BETWEEN PURLIN

SCALE: 3/4"=1'-0"

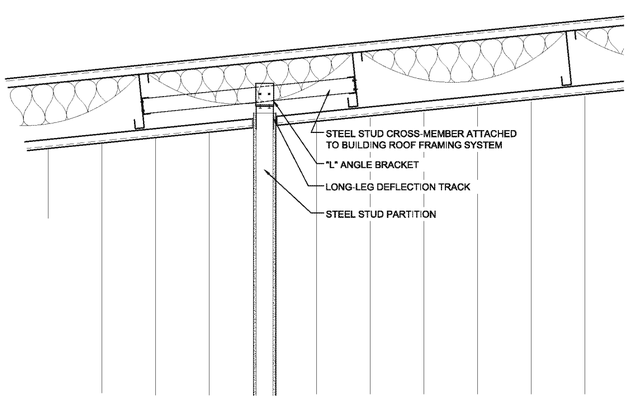

6 WALL TO ROOF CONNECTION DETAIL

SCALE: 3/4"=1'-0"

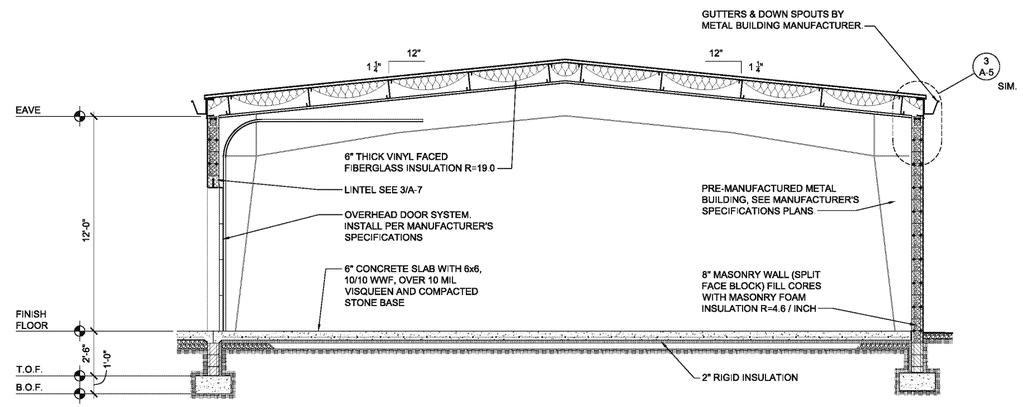

2 BUILDING SECTION @ O.H. DOOR

SCALE: 1/4"=1'-0"

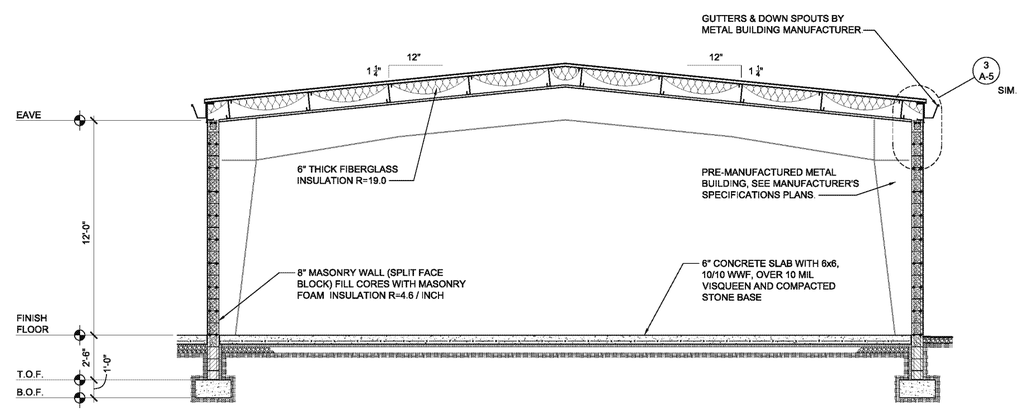

1 BUILDING SECTION

SCALE: 1/4"=1'-0"

quasar energy group
7624 Riverview Road
PO Box 31023
Cleveland OH 44141
Phone: 216.986.9999

Scale: SEE DETAIL

This drawing contains valuable confidential and proprietary information that belongs to quasar energy group, llc ("quasar"), and is subject to a separate Confidentiality and Nondisclosure Agreement. quasar is the author and owner of this drawing, and retains all common law, statutory and other rights and privileges with respect hereto, including copyrights. The information contained herein may not at any time be used for any unauthorized purpose, nor reproduced by or provided to any third party, without the prior written consent of quasar.

STATE OF OHIO
ALAN R. JOHNSON
46333
REGISTERED PROFESSIONAL ENGINEER

AS BUILT

Rev.	ECN Number	Date
2		
1		
0	AS BUILT	__/__/__

Drawing Name:
WALL SECTIONS
WALL DETAILS

Project Name and Address:
0058-CAR-OH-11

RINGLER FARMS
ADS Facility
ecoFarmsystem 980

2277 County Road 156
Cardington, OH 43315-9742

Area:

Author: RAMII

Calculated:

Checked: RN

Sheet Number: A-5

© 2012, Quasar Energy Group, LLC. All rights reserved.

P:\SBE Projects\0058-CAR-OH-11 - Ringler Farms\BUILDING DRAWINGS\CURRENT DRAWINGS (AS BUILT)\RINGLER FARMS ARCHITECTURAL.dwg
11/15/2013 2:20 PM

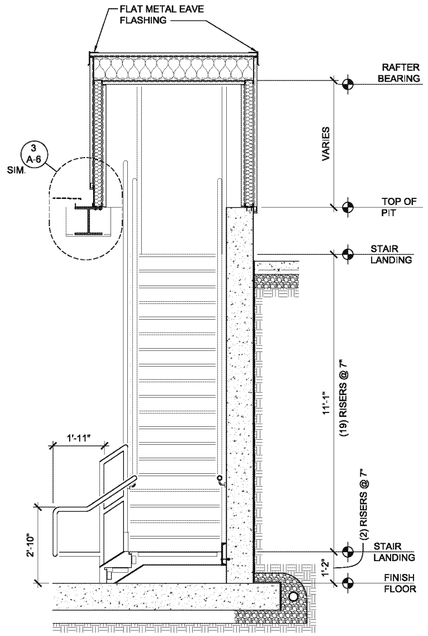

7 STAIR SECTION

SCALE: 3/8"=1'-0"

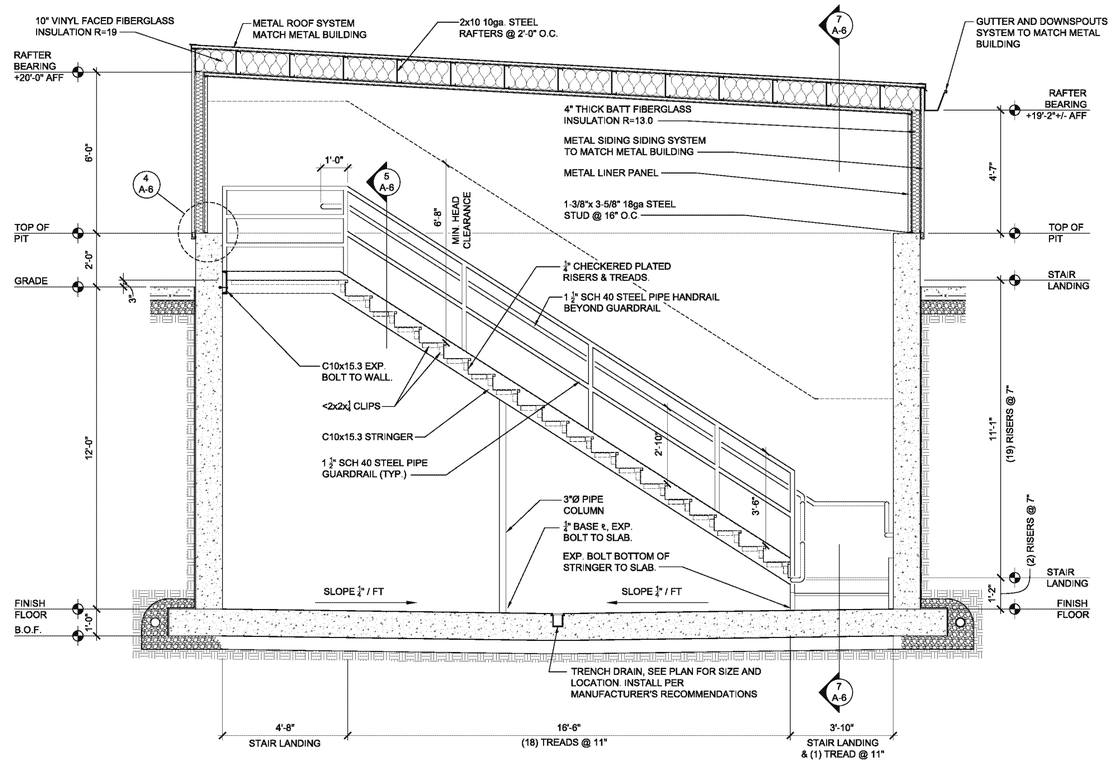

6 STAIR SECTION

SCALE: 3/8"=1'-0"

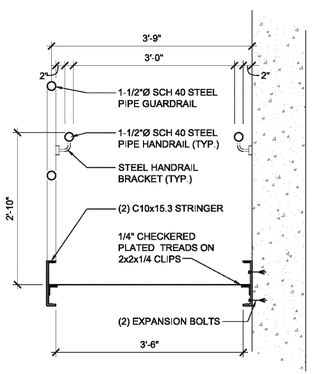

5 STAIR WELL SECTION

SCALE: 3/4"=1'-0"

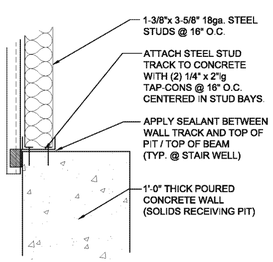

4 STAIR WELL DETAIL

SCALE: 1 1/2"=1'-0"

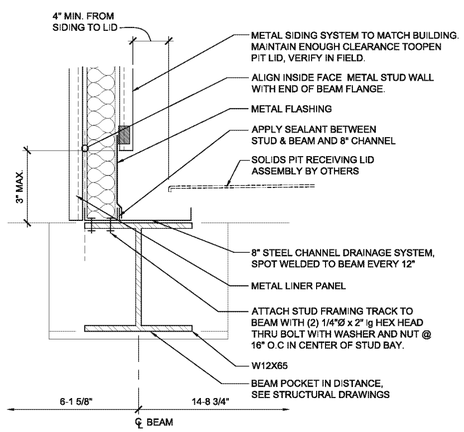

3 STAIR WELL DETAIL

SCALE: 1 1/2"=1'-0"

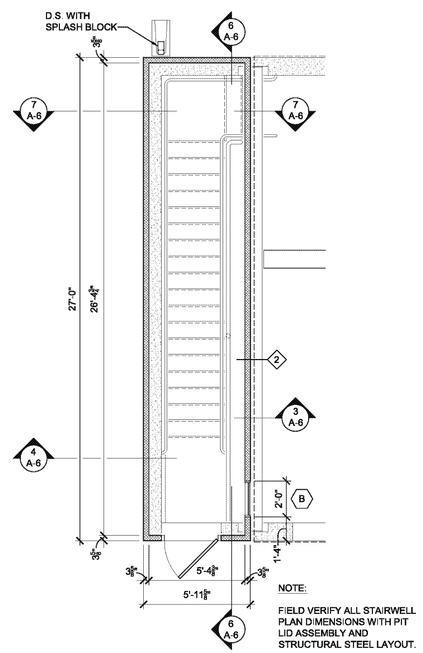

NOTE:

FIELD VERIFY ALL STAIRWELL PLAN DIMENSIONS WITH PIT LID ASSEMBLY AND STRUCTURAL STEEL LAYOUT.

2 STAIR WELL PLAN

SCALE: 1/4"=1'-0"

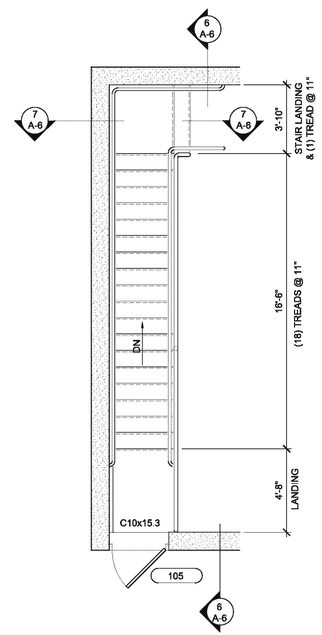

1 ENLARGED STAIR PLAN

SCALE: 1/4"=1'-0"

quasar energy group

quasar energy group
7624 Riverview Road
PO Box 31023
Cleveland OH 44141
Phone: 216.986.9999

Scale: SEE DETAIL

This drawing contains valuable confidential and proprietary information that belongs to quasar energy group, llc ("quasar"), and is subject to a separate Confidentiality and Nondisclosure Agreement. quasar is the author and owner of this drawing, and retains all common law, statutory and other rights and privileges with respect hereto, including copyrights. The information contained herein may not at any time be used for any unauthorized purpose, nor reproduced by or provided to any third party, without the prior written consent of quasar.

STATE OF OHIO
ALAN R. JOHNSON
46333
REGISTERED PROFESSIONAL ENGINEER

AS BUILT

Rev.	ECN Number	Date
2		
1		
0	AS BUILT	__/__/__

Drawing Name:

STAIR PLANS, SECTIONS, AND DETAILS

Project Name and Address:

0058-CAR-OH-11

RINGLER FARMS
ADS Facility
ecoFarmsystem 980

2277 County Road 156
Cardington, OH 43315-9742

Area:

Author: RAMII

Calculated:

Checked: RN

Sheet Number: A-6

© 2012, Quasar Energy Group, LLC. All rights reserved.

P:\SSE Projects\0058-CAR-OH-11 - Ringler Farms\BUILDING DRAWINGS\CURRENT DRAWINGS (AS BUILT)\RINGLER FARMS ARCHITECTURAL.dwg
11/15/2013 2:19 PM

HARDWARE TYPES

1. ENTRY TYPE MORTISE LOCK, PUSH BUTTON COMBINATION AND BEST REMOVABLE CORE, CLOSER, 1-1/2 PAIR BEARING HINGES, WEATHERSTRIP, SWEEP STRIP, TOP CAP, ADA LEVER HANDLE (OUTSIDE), PANIC HARDWARE (INSIDE), AND KICKPLATE (BOTH SIDES).
2. ENTRY TYPE MORTISE LOCK, BEST REMOVABLE CORE, CLOSER, 1-1/2 PAIR BEARING HINGES, WEATHERSTRIP, SWEEP STRIP, TOP CAP, ADA LEVER HANDLE (OUTSIDE), PANIC HARDWARE (INSIDE), AND KICKPLATE (BOTH SIDES).
3. PRIVACY MORTISE LOCK, CLOSER, 1-1/2 PAIR BEARING HINGES.
4. CLASSROOM TYPE MORTISE LOCK, CLOSER, BEST REMOVABLE CORE, 1-1/2 PAIR BEARING HINGES, ADA LEVER HANDLE, KICKPLATE BOTH SIDES, WEATHERSTRIP.
5. PROVIDE ELECTRICAL OVERHEAD DOOR OPENER 3/4 H.P. 120V 1Ø. PROVIDE INTERIOR PUSH SWITCH OPERATOR, EXTERIOR KEYPAD, AND SAFETY SENSORS

NOTE: ALL HARDWARE TO BE STAINLESS STEEL.

ROOM FINISH SCHEDULE

ROOM NO	NAME	FLOOR	BASE	WALL				CEILING		REMARKS
		MATL	MATL	NORTH MATL	EAST MATL	SOUTH MATL	WEST MATL	MATL	HEIGHT	
101	OFFICE	EPOXY PAINT	6" VINYL	PNT DW	PNT DW	PNT DW	PNT DW	ACT	9'-0"	
102	UNISEX ADA ACCESSIBLE RESTROOM	EPOXY PAINT	6" VINYL	FRP	FRP	FRP	FRP	ACT	8'-0"	
103	PLANT	EPOXY PAINT	*	CMU	CMU	CMU	CMU	LP	—	FRP FINISH AROUND OFFICE & RESTROOM

(*) PROVIDE 6" VINYL BASE AROUND OFFICE AND RESTROOM

OPENING SCHEDULE

OPEN'G NO	OPENING					FRAME					HDWR TYPE	REMARKS
								DETAIL				
	TYPE	W	HT	MATL	GL	TYPE	MATL	JAMB	HEAD	SILL		
100	HGW	3'-0"	7'-0"	HM	-	1	HM	2/A-7	3/A-7	X	1	PAINTED SEMI-GLOSS, INSULATED, BY PREMANUFACTURED BLD'G PROVIDER
101	HG	3'-0"	7'-0"	HM	-	1	HM	-	-	X	4	PAINTED SEMI-GLOSS, INSULATED
102	FL	3'-0"	7'-0"	HM	-	1	HM	-	-	X	3	PAINTED SEMI-GLOSS, 12"x12" "NO VIEW" LOUVER, UNDERCUT DOOR 1"
103	OH	10'-0"	10'-0"	ST'L	-	-	ST'L	1/A-7	4/A-7	X	5	FACTORY FINISH, INSULATED
104	HGW	3'-0"	7'-0"	HM	-	1	HM	2/A-7	3/A-7	X	2	PAINTED SEMI-GLOSS, INSULATED, BY PREMANUFACTURED BLD'G PROVIDER
105	FL	3'-0"	7'-0"	HM	-	1	HM	-	-	X	2	PAINTED SEMI-GLOSS, INSULATED

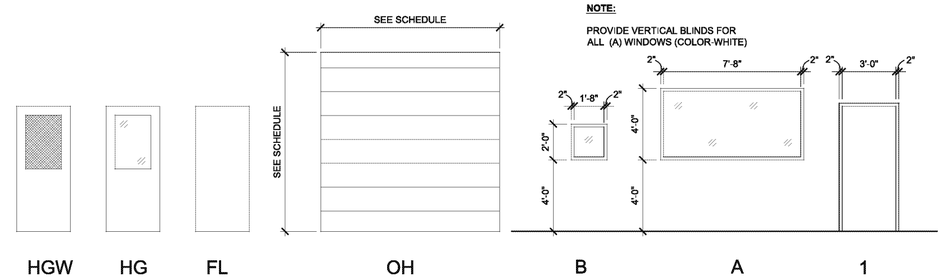

5 DOOR, WINDOW & FRAME TYPES
SCALE: 1/4"=1'-0"

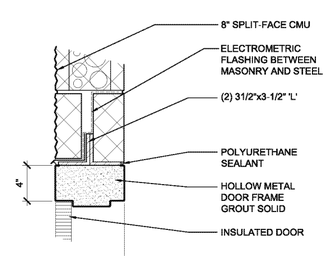

4 MAN DOOR HEAD DETAIL
SCALE: 1-1/2"=1'-0"

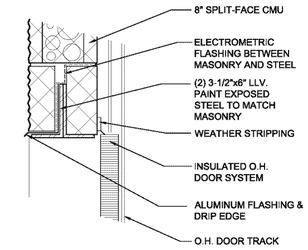

3 O.H. DOOR HEAD DETAIL
SCALE: 1-1/2"=1'-0"

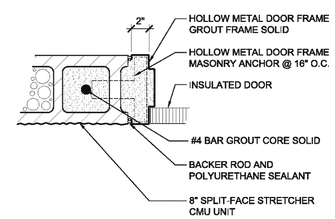

2 MAN DOOR JAMB DETAIL
SCALE: 1-1/2"=1'-0"

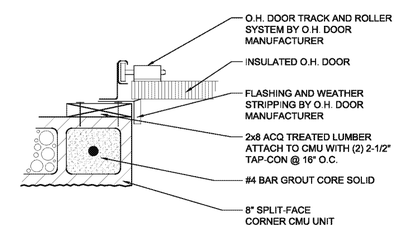

1 O.H. DOOR JAMB DETAIL
SCALE: 1-1/2"=1'-0"

quasar energy group
7624 Riverview Road
PO Box 31023
Cleveland OH 44141
Phone: 216.986.9999

Scale: SEE DETAIL

This drawing contains valuable confidential and proprietary information that belongs to quasar energy group, llc ("quasar"), and is subject to a separate Confidentiality and Nondisclosure Agreement. quasar is the author and owner of this drawing, and retains all common law, statutory and other rights and privileges with respect hereto, including copyrights. The information contained herein may not at any time be used for any unauthorized purpose, nor reproduced by or provided to any third party, without the prior written consent of quasar.

STATE OF OHIO
ALAN R. JOHNSON
46333
REGISTERED PROFESSIONAL ENGINEER

AS BUILT

Rev.	ECN Number	Date
2		
1		
0	AS BUILT	__/__/__

Drawing Name:
DOOR SCHEDULE
FINISH SCHEDULE
HARDWARE TYPES
DOOR & FRAME TYPES
HEAD & JAMB DETAILS

Project Name and Address:
0058-CAR-OH-11

RINGLER FARMS
ADS Facility
ecoFarmsystem 980

2277 County Road 156
Cardington, OH 43315-9742

Area:
Author: RAMII
Calculated:
Checked: RN
Sheet Number: A-7

© 2012, Quasar Energy Group, LLC. All rights reserved.

P:\SBE Projects\0058-CAR-OH-11 - Ringler Farms\BUILDING DRAWINGS\CURRENT DRAWINGS (AS BUILT)\RINGLER FARMS ARCHITECTURAL.dwg
11/15/2013 2:19 PM

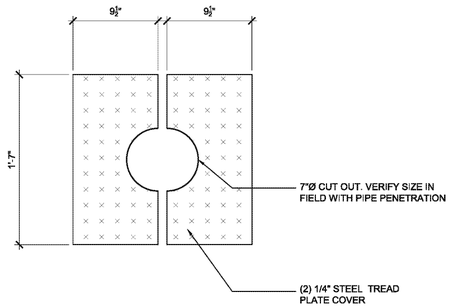

3 CURB CAP DETAIL

SCALE: 1-1/2" = 1'-0"

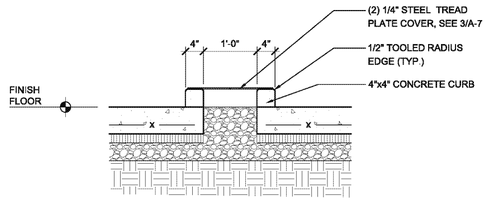

2 TYPICAL CONCRETE CURB DETAIL

SCALE: 3/4" = 1'-0"

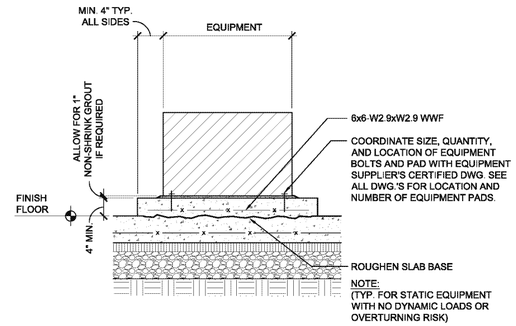

1 TYPICAL HOUSE KEEPING PAD SECTION

SCALE: N.T.S.

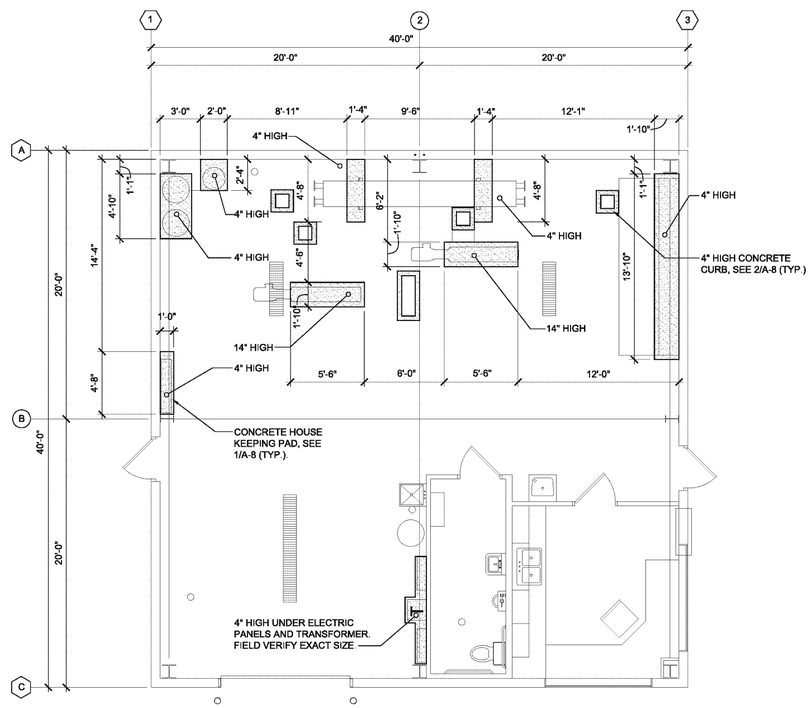

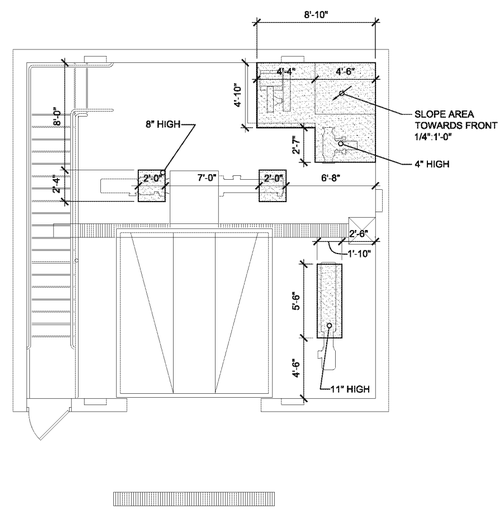

NOTE:

FIELD VERIFY ALL HOUSEKEEPING PAD SIZES AND LOCATION WITH EQUIPMENT PRIOR TO POURING

HOUSE KEEPING PAD PLAN

SCALE: 3/16"=1'-0"

quasar energy group

quasar energy group
7624 Riverview Road
PO Box 31023
Cleveland OH 44141
Phone: 216.986.9999

Scale: SEE DETAIL

This drawing contains valuable confidential and proprietary information that belongs to quasar energy group, llc ("quasar"), and is subject to a separate Confidentiality and Nondisclosure Agreement. quasar is the author and owner of this drawing, and retains all common law, statutory and other rights and privileges with respect hereto, including copyrights. The information contained herein may not at any time be used for any unauthorized purpose, nor reproduced by or provided to any third party, without the prior written consent of quasar.

STATE OF OHIO
ALAN R. JOHNSON
46333
REGISTERED PROFESSIONAL ENGINEER

AS BUILT

Rev.	ECN Number	Date
2		
1		
0	AS BUILT	__/__/__

Drawing Name:
HOUSE KEEPING PAD PLAN

Project Name and Address:
0058-CAR-OH-11

RINGLER FARMS
ADS Facility
ecoFarmsystem 980

2277 County Road 156
Cardington, OH 43315-9742

Area:

Author: RAMII

Calculated:

Checked: RN

Sheet Number: A-8

© 2012, Quasar Energy Group, LLC. All rights reserved.

P:\SBE Projects\0058-CAR-OH-11 - Ringler Farms\BUILDING DRAWINGS\CURRENT DRAWINGS (AS BUILT)\RINGLER FARMS HOUSE KEEPING PAD PLAN A-8.dwg
11/15/2013 2:38 PM

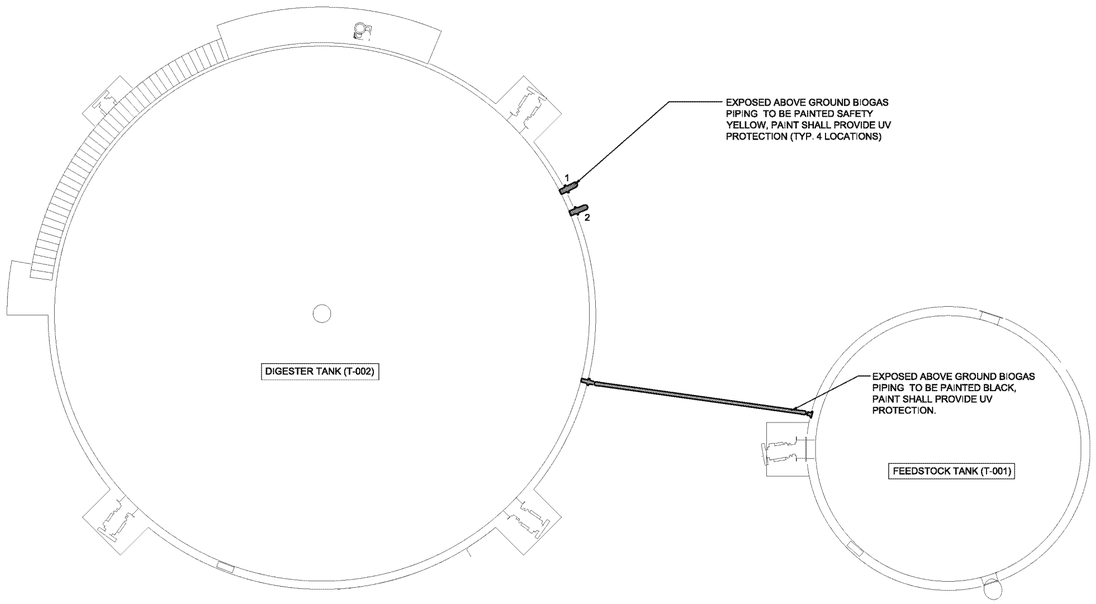

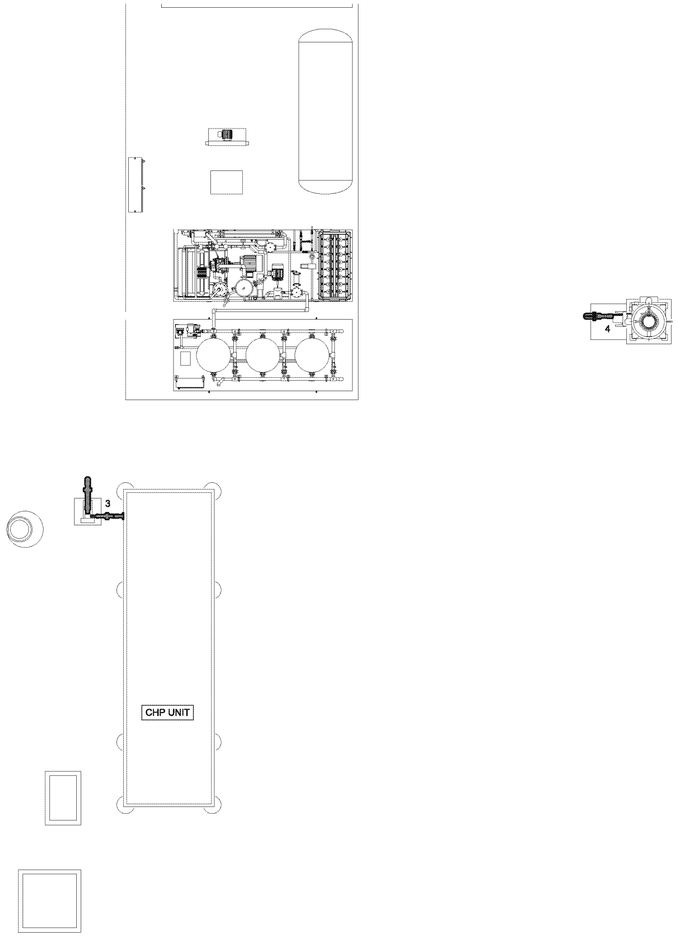

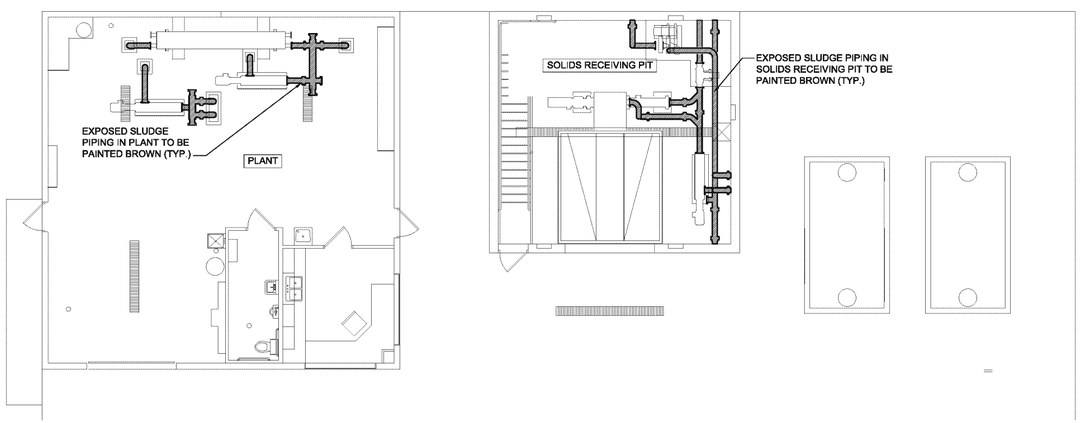

NOTE:

MASONRY WALK WITHIN BUILDING SHALL BE SEALED AND PAINTED WHITE.

ALL EXPOSED FRAMING MEMBERS, COLUMNS, PURLINS, ETC. SHALL BE PAINTED WHITE PRIOR TO BUILDING FINISHES BEING INSTALLED.

PAINTING PLAN

SCALE: 1/8"=1'-0"

quasar energy group

quasar energy group
7624 Riverview Road
PO Box 31023
Cleveland OH 44141
Phone: 216.986.9999

N

Scale: 1/8"=1'-0"

This drawing contains valuable confidential and proprietary information that belongs to quasar energy group, llc ("quasar"), and is subject to a separate Confidentiality and Nondisclosure Agreement. quasar is the author and owner of this drawing, and retains all common law, statutory and other rights and privileges with respect hereto, including copyrights. The information contained herein may not at any time be used for any unauthorized purpose, nor reproduced by or provided to any third party, without the prior written consent of quasar.

STATE OF OHIO
ALAN R. JOHNSON
46333
REGISTERED PROFESSIONAL ENGINEER

AS BUILT

Rev.	ECN Number	Date
2		
1		
0	AS BUILT	__/__/__

Drawing Name:
PAINTING PLAN

Project Name and Address
0058-CAR-OH-11

RINGLER FARMS
ADS Facility
ecoFarmsystem 980

2277 County Road 156
Cardington, OH 43315-9742

Area:

Author:
RAMII

Calculated:

Checked:
RN

Sheet Number:
A-9

© 2012, Quasar Energy Group, LLC. All rights reserved.

P:\SBE Projects\0058-CAR-OH-11 - Ringler Farms\BUILDING DRAWINGS\CURRENT DRAWINGS (AS BUILT)\RINGLER FARMS (A-9810) PAINTING PLANS.dwg
11/15/2013 3:19 PM

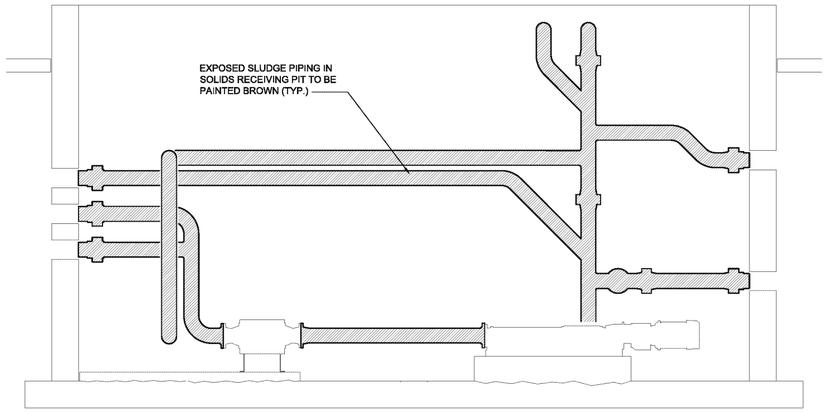

4 SOLIDS RECIVING PIT PAINTING SECTION

SCALE: 3/8"=1'-0"

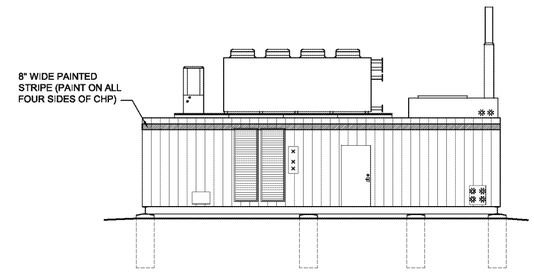

3 CHP PAINTING ELEVATION

SCALE: 1/8"=1'-0"

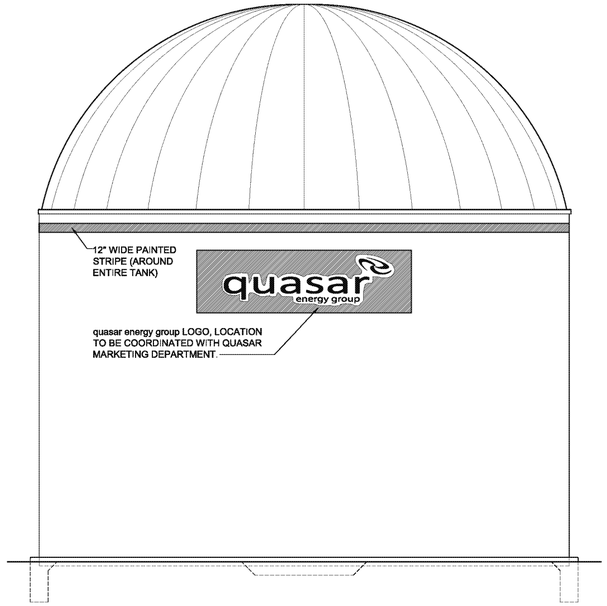

2 DIGESTER TANK (T-002) PAINTING ELEVATION

SCALE: 1/8"=1'-0"

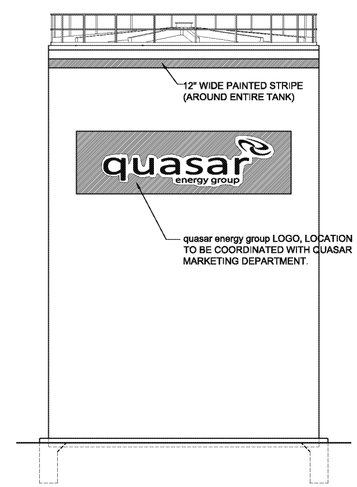

1 FEEDSTOCK TANK (T-001) PAINTING ELEVATION

SCALE: 1/8"=1'-0"

NOTE:

SEE PAINTING PLAN ON A-8 FOR LOCATIONS
OF EXPOSED ABOVE GROUND BIOGAS
PIPING TO BE PAINTED SAFETY YELLOW.

quasar energy group
7624 Riverview Road
PO Box 31023
Cleveland OH 44141
Phone: 216.986.9999

Scale: SEE DETAIL

This drawing contains valuable confidential and proprietary information that belongs to quasar energy group, llc ("quasar"), and is subject to a separate Confidentiality and Nondisclosure Agreement. quasar is the author and owner of this drawing, and retains all common law, statutory and other rights and privileges with respect hereto, including copyrights. The information contained herein may not at any time be used for any unauthorized purpose, nor reproduced by or provided to any third party, without the prior written consent of quasar.

STATE OF OHIO
ALAN R. JOHNSON
46333
REGISTERED
PROFESSIONAL ENGINEER

AS BUILT

Rev.	ECN Number	Date
2		
1		
0	AS BUILT	__/__/__

Drawing Name:
PAINTING DETAILS

Project Name and Address:
0058-CAR-OH-11

RINGLER FARMS
ADS Facility
ecoFarmsystem 980

2277 County Road 156
Cardington, OH 43315-9742

Area:

Author: RAMII

Calculated:

Checked: RN

Sheet Number: A-10

© 2012, Quasar Energy Group, LLC. All rights reserved.

P:\SBE Projects\0058-CAR-OH-11 - Ringler Farms\BUILDING DRAWINGS\CURRENT DRAWINGS (AS BUILT)\RINGLER FARMS (A-9&10) PAINTING PLANS.dwg
11/15/2013 2:39 PM

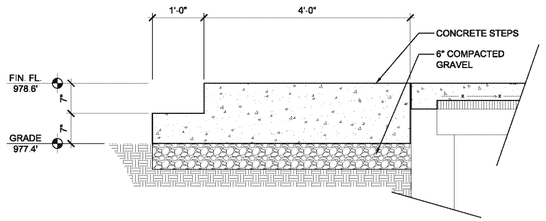

4 STAIR DETAIL
SCALE: 3/4"=1'-0"

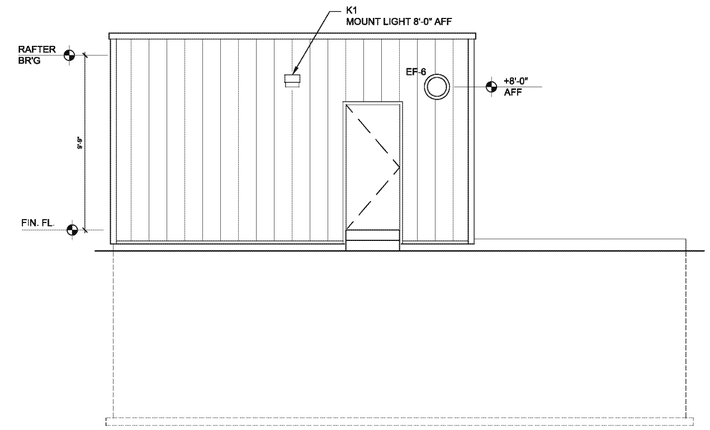

4 ELEVATION
SCALE: 1/4"=1'-0"

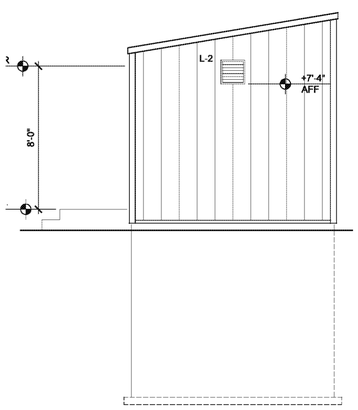

3 ELEVATION
SCALE: 1/4"=1'-0"

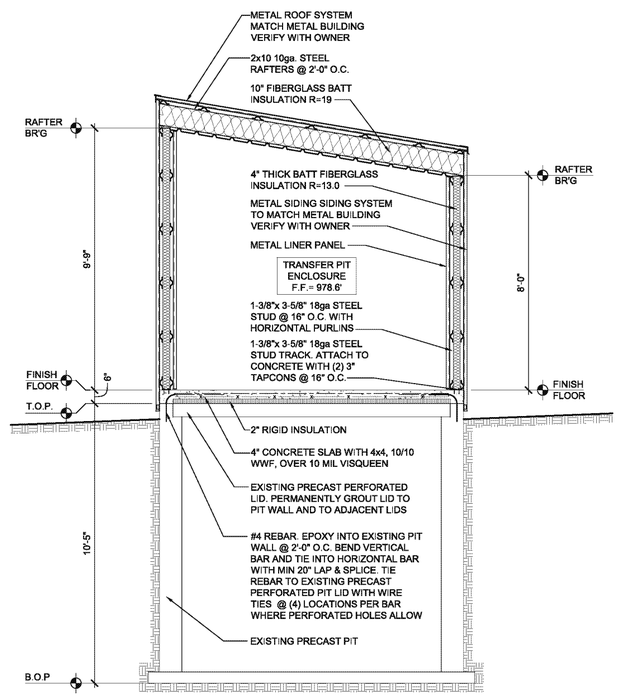

2 SECTION
SCALE: 3/8"=1'-0"

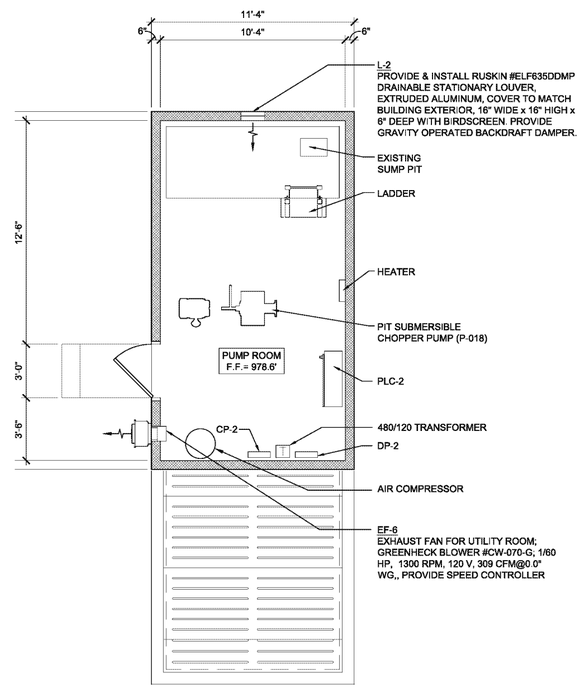

1 FLOOR PLAN
SCALE: 1/4"=1'-0"

quasar energy group
7624 Riverview Road
PO Box 31023
Cleveland OH 44141
Phone: 216.986.9999

Scale: SEE DETAIL

This drawing contains valuable confidential and proprietary information that belongs to quasar energy group, llc ("quasar"), and is subject to a separate Confidentiality and Nondisclosure Agreement. quasar is the author and owner of this drawing, and retains all common law, statutory and other rights and privileges with respect hereto, including copyrights. The information contained herein may not at any time be used for any unauthorized purpose, nor reproduced by or provided to any third party, without the prior written consent of quasar.

STATE OF OHIO
ALAN R. JOHNSON
46333
REGISTERED
PROFESSIONAL ENGINEER

AS BUILT

Rev.	ECN Number	Date
2		
1		
0	AS BUILT	__/__/__

Drawing Name:
TRANSFER TANK PLANS

Project Name and Address:
0058-CAR-OH-11

RINGLER FARMS
ADS Facility
ecoFarmsystem 980

2277 County Road 156
Cardington, OH 43315-9742

Area:
Author: RAMII
Calculated:
Checked: RN
Sheet Number: TT-1

© 2012, Quasar Energy Group, LLC. All rights reserved.

P:\SBE Projects\0058-CAR-OH-11 - Ringler Farms\BUILDING DRAWINGS\CURRENT DRAWINGS (AS BUILT)\RINGLER FARMS TRANSFER TANK.dwg
11/15/2013 2:15 PM

HVAC ABBREVIATIONS

A	
AFF	ABOVE FINISHED FLOOR
AFMS	AIR FLOW MEASURING STATION
AMP	AMPERE
AUTO	AUTOMATIC
AVG	AVERAGE
B	
BAS	BUILDING AUTOMATION SYSTEM
BTU	BRITISH THERMAL UNIT
BTUH	BTU PER HOUR
C	
C	CONDENS(-ATE, -ER, -ING, -ATION)
CFM	CUBIC FEET PER MINUTE
CU FT	CUBIC FEET
CU IN	CUBIC INCH
D	
DB	DRY-BULB
DEG F	DEGREES FAHRENHEIT
E	
EF	EXHAUST FAN(S)
ESP	EXTERNAL STATIC PRESSURE
EXH	EXHAUST
F	
°F	DEGREES FAHRENHEIT
FPM	FEET PER MINUTE
FT	FOOT OR FEET
G	
G	NATURAL GAS
H	
HP	HORSEPOWER
HVAC	HEATING, VENTILATING AND AIR CONDITIONING
I	
IN	INCHES
K	
KW	KILOWATT
KWH	KILOWATT HOUR
L	
LAT	LEAVING AIR TEMPERATURE
LB	POUNDS
M	
MAT	MIXED AIR TEMPERATURE
MAX	MAXIMUM
MBH	THOUSAND BTU PER HOUR
MIN	MINIMUM
MUA	MAKE UP AIR
N	
NTS	NOT TO SCALE
O	
OA	OUTSIDE AIR
P	
PC	PUMPED CONDENSATE
PH	PHASE (ELECTRICAL)
R	
RA	RETURN AIR
S	
SA	SUPPLY AIR
SP	STATIC PRESSURE
SS	STAINLESS STEEL
T	
ΔT	TEMPERATURE DIFFERENCE
TONS	TONS OF REFRIGERATION
TEMP	TEMPERATURE
TSP	TOTAL STATIC PRESSURE
T'STAT	THERMOSTAT
TYP	TYPICAL
U	
UH	UNIT HEATER
V	
V	VOLT
VAV	VARIABLE AIR VOLUME
VB	
VEL	VELOCITY
VD	
VFD	VARIABLE FREQUENCY DRIVE
W	
W	WATT

SYMBOL	DESCRIPTION
NAME(E)	EXISTING PIPING TO REMAIN
NAME	NEW PIPE (SEE ABBREVIATIONS FOR DESIGNATION)
	ARROW INDICATES DIRECTION OF FLOW
	PIPE ELBOW UP, 90° OR 45°
	PIPE ELBOW DN, 90° OR 45°
	PIPE TEE UP
	PIPE TEE DOWN
	BRANCH, TOP CONNECTION
	GATE VALVE/GENERAL SERVICE VALVE
	GLOBE VALVE
	PLUG VALVE
	CHECK VALVE (ARROW INDICATES FLOW)
	AUTO. TWO-WAY CONTROL VALVE
	AUTO. THREE-WAY CONTROL VALVE
	BALL VALVE
	BUTTERFLY VALVE
	ANGLE VALVE
	BALANCING VALVE
	AUTO. FLOW SELF BALANCING VALVE
	SOLENOID VALVE
	PRESSURE REDUCING VALVE
	REDUCED PRESSURE BACKFLOW PREVENTER
	TRIPLE DUTY VALVE
	OUTSIDE STEM & YOKE VALVE
	PRESSURE RELIEF VALVE
AV	AUTOMATIC AIR VENT
MAV	MANUAL AIR VENT
	STEAM TRAP
	PIPE UNION
	VENTURI FLOW METER
	PIPE CAPPED
	PIPE GUIDES OR SLEEVES
	PIPE ANCHOR
	FLEXIBLE PIPE CONNECTION
	CONCENTRIC REDUCER
	ECCENTRIC REDUCER
	PRESSURE GAUGE WITH STOPCOCK
	PRESSURE GAUGE WITH PIGTAIL & STOPCOCK
	STRAINER WITH BLOW DOWN VALVE
	HOSE END DRAIN VALVE
	VALVE IN RISER
	THERMOMETER
FS	FLOW SWITCH
PS	PRESSURE SWITCH
	TEMPERATURE/PRESSURE TEST PLUG (PETE'S PLUG)
T T	THERMOSTAT (T'STAT) OR TEMPERATURE SENSOR
S	SMOKE DETECTOR
AF	AIR FLOW MONITORING STATION
SP	DUCT STATIC PRESSURE SENSOR

GENERAL NOTES

1. COORDINATE THE EXACT REQUIREMENTS AND LOCATION OF WORK WITH THE WORK OF OTHER TRADES PRIOR TO FABRICATION. PROVIDE ADDITIONAL OFF-SETS AND SECTIONS OF DUCTWORK AND PIPING AS MAY BE REQUIRED TO MEET THE APPLICABLE JOB CONDITION REQUIREMENTS. VERIFY EXISTING JOB-SITE ELEVATIONS, DIMENSIONS, AND CONDITIONS, PRIOR TO FABRICATION OR INSTALLATION OF THE WORK. COORDINATE EXACT ROUTING OF DUCTWORK AND PIPING WITH OTHER TRADES SO THAT NO CONFLICTS OCCUR WITH DUCTWORK, PIPING, LIGHTS, STRUCTURE, ETC. PROVIDE TO THE APPROPRIATE TRADES ALL PERTINENT DATA CONCERNING THE LOCATION, DIMENSIONS, ETC., OF THE MECHANICAL EQUIPMENT THAT REQUIRES BASES, CURBS AND SUPPORTS.
2. ALL SEALS, BEARINGS, PACKINGS, AND ACCESSORIES FOR ALL EQUIPMENT AND PIPING SPECIALTIES SHALL BE SUITABLE FOR THE CONTINUOUS OPERATIONAL TEMPERATURES, PRESSURES AND CHARACTERISTICS, OF THE SYSTEMS THEY SERVE.
3. COORDINATE PHASING OF ALL DEMOLITION WORK WITH OTHER TRADES AS WELL AS PHASING OF RENOVATION WORK. REVIEW RENOVATION DRAWINGS TO VERIFY AND DETERMINE EXTENT OF, AND SCHEDULING FOR, ALL DEMOLITION PRIOR TO PERFORMING DEMOLITION WORK.
4. FOR RENOVATION WORK, FIELD VERIFY ALL SIZES AND LOCATIONS OF EXISTING DUCTWORK AND PIPING TO REMAIN. NOTIFY ARCHITECT OF DEVIATIONS WHICH AFFECT RENOVATION WORK PRIOR TO PROCEEDING WITH THE WORK.
5. VISIT THE SITE OF THE WORK TO GAIN AN ACCEPTABLE KNOWLEDGE OF CONDITIONS AFFECTING THE EXECUTION OF THE WORK. AFTER VISITING THE SITE, REQUEST SUCH INFORMATION AND/OR CLARIFICATIONS AS NECESSARY TO FULLY UNDERSTAND THE WORK REQUIRED AND TO PROPERLY ESTIMATE COSTS. THE RENDERING OF A PROPOSAL OR BID TO PERFORM THE WORK SHALL REPRESENT THAT THE SITE HAS BEEN VISITED AND ALL CONDITIONS AFFECTING THE PERFORMANCE OF THE CONTRACT HAVE BEEN NOTED.
6. SCHEDULE ALL WORK AS TO CAUSE A MINIMUM OF "DOWN TIME" FOR THE OWNER. AS ANY INTERRUPTIONS OF EXISTING SERVICES BECOMES NECESSARY, SCHEDULE SUCH INTERRUPTIONS WITH THE OWNER PRIOR TO THEIR COMMENCEMENT. GIVE THE OWNER NO LESS THAN TWO WEEKS NOTICE AS TO WHEN TO EXPECT SUCH INTERRUPTIONS. WORK SHALL BE PERFORMED AT SUCH TIMES AS DIRECTED BY THE OWNER.
7. ENSURE THAT THE WORK WILL NOT INTERFERE OR INTERRUPT SERVICES TO AREAS OUTSIDE OF THE DESIGNATED CONTRACT AREAS. UNAVOIDABLE INTERRUPTIONS ARE TO BE SCHEDULED TWO WEEKS IN ADVANCE AND IF POSSIBLE ARE TO OCCUR DURING OFF PEAK PERIODS (NIGHTS AND WEEKENDS).
8. ALL FLOOR PENETRATIONS TO BE SEALED WATER TIGHT AND COMPLETELY PACKED WITH FIRE STOP MATERIAL.
9. ALL WORK IS TO BE PHASED AS INDICATED ON THE ARCHITECTURAL DRAWINGS. CLOSELY COORDINATE PHASING OF WORK WITHIN THE CORRIDORS WITH THE OWNER. CORRIDORS CAN NOT BE TOTALLY CLOSED OFF TO PEDESTRIAN TRAFFIC. TO ACCOMMODATE PHASING, CORRIDOR ACCESS WORK MAY NEED TO BE PERFORMED AT NIGHT AND ON WEEKENDS. PRIOR TO MOVING ON TO A NEXT PHASE, ALL PREVIOUSLY PHASED AREAS MUST BE OPERATIONAL AND OCCUPIABLE. MAINTAIN SERVICES THROUGHOUT THE CONSTRUCTION.
10. COORDINATE THE LOCATION OF ALL UTILITY CONNECTION POINTS FOR EQUIPMENT WITH OTHER TRADES.
11. THE CONTRACTOR IS TO VERIFY THE EXACT SERVICE OF ANY EXISTING PIPING OR DUCTWORK PRIOR TO INSTALLING ANY NEW CONNECTIONS. ANY DISCREPANCIES BETWEEN THE CONSTRUCTION DOCUMENTS OR THE DESIGN INTENT AND ACTUAL CONDITIONS ARE TO BE BROUGHT TO THE ATTENTION OF THE ENGINEER IMMEDIATELY, PRIOR TO INSTALLING SAID CONNECTION
12. ALL BRANCH DUCT TAKEOFFS SHALL HAVE MANUAL BALANCING DAMPERS UNLESS NOTED OTHERWISE.
13. ROOM TEMPERATURE SENSORS AND ROOM THERMOSTATS SHALL BE MOUNTED AT 48" ABOVE FINISHED FLOOR, UNLESS NOTED OTHERWISE.

SYMBOLS	DESCRIPTION
S1-200-8	SUPPLY AIR DEVICE, TYPE S1, 200 CFM 8 INCH DIA NECK
R2-600-12x12	RETURN AIR DEVICE, TYPE R2, 600 CFM 12 INCH BY 12 INCH NECK
E2-200-8X8	EXHAUST AIR DEVICE, TYPE E2, 200 CFM 8 INCH BY 8 INCH NECK
	FLEXIBLE DUCT
VD AD FD FSD BD	VD: VOLUME DAMPER (OR NO LABEL) AD: AUTOMATIC DAMPER FD: FIRE DAMPER FSD: COMBINATION FIRE AND SMOKE DAMPER BDD: BACK DRAFT DAMPER
RTU-1 RAF-1 AHU-1 EF-1 HX-1 — TYPICAL EQUIPMENT DESIGNATIONS	SHADED ITEMS INDICATED ON THE DRAWINGS REPRESENT NEW EQUIPMENT TO BE PROVIDED. SEE SCHEDULES AND SPECIFICATIONS FOR PERFORMANCES.
	OUTSIDE AIR OR SUPPLY AIR ELBOW DOWN
	OUTSIDE AIR OR SUPPLY AIR ELBOW UP
	EXHAUST, RETURN OR RELIEF AIR ELBOW DOWN
	EXHAUST, RETURN OR RELIEF AIR ELBOW UP
DN UP	DUCT OFF-SET UP (UP) OR DOWN (DN) IN DIRECTION OF ARROW
	SQUARE TO ROUND OR FLAT OVAL DUCT TRANSITION
	DUCT TRANSITION
	BRANCH TAKE-OFF TOP AND BOTTOM
12"Ø	ROUND DUCT SIZE IN INCHES
24x12	RECTANGULAR DUCT SIZE IN INCHES, FIRST NUMBER INDICATES SIZE FOR SIDE SHOWN
U	DOOR UNDERCUT

DUCT CONSTRUCTION DETAILS

DESCRIPTION	DOUBLE LINE DRAWING	SINGLE LINE DRAWING	DETAILED CONSTRUCTION REQUIRED
DUCT TAKEOFF FROM LOW PRESSURE MAIN			45° ENTRY BRANCH; VD; MIN. 2" LESS DEPTH THAN MAIN
SPLIT TAKEOFF WITH RADIUS ELBOW (LOW PRESSURE DUCTWORK ONLY)			Z=X+Y; N; X; VD; VD; Y
SPLIT TAKEOFF WITH SQUARE OR RECT. ELBOW (LOW PRESSURE DUCTWORK ONLY)			Z=X+Y; N; X; VD; VD; Y
ELBOW AND SPLIT (LOW PRESSURE DUCTWORK ONLY)			VD; VD
SQUARE OR RECTANGULAR ELBOW			SINGLE THICKNESS TURNING VANES
SQUARE OR RECTANGULAR RADIUS ELBOW			W; R; R=W; STANDARD; VANE; W; R; L; R=W-S; S=L=1/3 W; SHORT
RECTANGULAR DUCT TAKEOFF FROM HIGH PRESSURE RECTANGULAR MAIN			45° ENTRY BRANCH; MIN. 2" LESS DEPTH THAN MAIN; ANGLED TAP
ROUND DUCT TAKEOFF FROM HIGH PRESSURE RECTANGULAR MAIN			BELLMOUTH FITTING

quasar energy group
7624 Riverview Road
PO Box 31023
Cleveland OH 44141
Phone: 216.986.9999

Scale: NONE

This drawing contains valuable confidential and proprietary information that belongs to quasar energy group, llc ("quasar"), and is subject to a separate Confidentiality and Nondisclosure Agreement. quasar is the author and owner of this drawing, and retains all common law, statutory and other rights and privileges with respect hereto, including copyrights. The information contained herein may not at any time be used for any unauthorized purpose, nor reproduced by or provided to any third party, without the prior written consent of quasar.

STATE OF OHIO — ALAN R. JOHNSON 46333 — REGISTERED PROFESSIONAL ENGINEER

AS BUILT

Rev.	ECN Number	Date
2		
1		
0	AS BUILT	__/__/__

Drawing Name:

HVAC ABBREVIATIONS, SYMBOLS, AND NOTES

Project Name and Address:

0058-CAR-OH-11

RINGLER FARMS
ADS Facility
ecoFarmsystem 980

2277 County Road 156
Cardington, OH 43315-9742

Area: —

Author: RAMII

Calculated: —

Checked: RN

Sheet Number: H-1

P:\SBE Projects\0058-CAR-OH-11 - Ringler Farms\BUILDING DRAWINGS\CURRENT DRAWINGS (AS BUILT)\RINGLER FARMS HVAC PLAN.dwg
11/15/2013 2:42 PM

© 2012, Quasar Energy Group, LLC. All rights reserved.

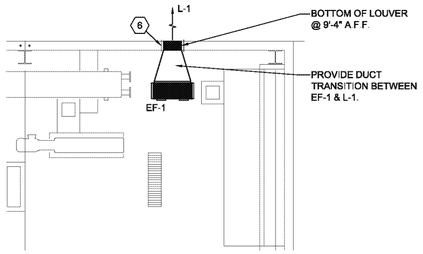

2 PARTIAL HVAC PLAN

SCALE: 1/4"=1'-0"

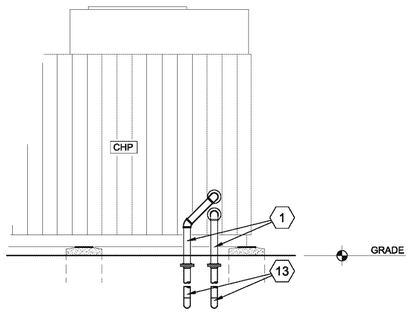

1 EXTERIOR PIPING ELEVATION

SCALE: 1/4"=1'-0"

CODED NOTES

1. EXTERIOR ABOVE GROUND 4"HWS & 4"HWR PIPING TO BE SCH#40 BLACK IRON WELDED PIPE AND FITTINGS. PROVIDE 2" THICK FIBER GLASS INSULATION AND PROTECT WITH ALUMINUM JACKET. INSTALL PER MANUFACTURER'S RECOMMENDATION.
2. HWS & HWR LINES ABOVE FLOOR WITHIN THE BUILDING SHALL BE SCH#40 BLACK IRON PIPE w/ GROOVED JOINTS AND FITTINGS FOR PIPING 2-1/2" AND LARGER, PIPING 2" AND SMALLER SHALL BE SCH#40 BLACK IRON PIPE w/ SCREWED JOINTS AND FITTINGS
3. PROVIDE 4" TEE w/ BUTTERFLY VALVE, CAP FOR FUTURE USE (TYP. HWS & HWR LINES).
4. 4" BUTTERFLY VALVE (TYP. HWS & HWR LINES).
5. RADIANT FLOOR ZONE MANIFOLD ASSEMBLIES AND DEDICATED ZONE CIRCULATOR PUMPS RACKED ON WALL. EXTEND RIBBING DIRECTLY INTO SLAB. (SEE DETAILS)
6. SEAL ALL PENETRATIONS AIR AND WATER TIGHT.
7. INTERIOR HWS & HWR LINES TO BE INSULATED WITH 1" THICK FIBERGLASS PIPE INSULATION WITH WHITE FACING.
8. INSULATE HEAT EXCHANGE WITH 1" THICK FIBERGLASS PIPE INSULATION. PROVIDE PVC JACKET OVER INSULATION (COLOR WHITE).
9. CONTRACTOR SHALL PROVIDE A TEMPERATURE CONTROL SYSTEM FOR THE BUILDING FLOOR HEATING SYSTEM. SYSTEM SHALL PROVIDE FOR (1) THERMOSTAT IN OFFICE & (1) THERMOSTAT IN PLANT. CONTRACTOR IS RESPONSIBLE FOR ALL NECESSARY COMPONENTS (RELAYS, TRANSFORMERS, CONTROLLERS, & ETC.) AND WIRING FOR A COMPLETE SYSTEM.
10. CONTRACTOR SHALL PROVIDE A CONTROL SYSTEM FOR THE SNOW MELT SYSTEM. SYSTEM SHALL CONSIST OF SLAB SENSOR AND ALL NECESSARY CONTROLLERS, RELAYS, TRANSFORMERS, WIRING, & ETC. FOR A COMPLETE SYSTEM.
11. 2" TAKE OFF'S FOR FUTURE (PROVIDE VALVES & CAPS).
12. EXTERIOR H.W.S. & H.W.R LINES ABOVE GRADE SHALL BE INSULATED WITH 2" THICK FIBERGLASS PIPE INSULATION WITH ALUMINUM JACKET
13. EXTERIOR BELOW GROUND 4"HWS & 4"HWR PEX PIPING WITH COMPRESSION FITTINGS. INSTALL PER MANUFACTURER'S RECOMMENDATIONS.

EQUIPMENT NOTES

ALL DUCTWORK AND PIPING IS TO BE INSTALLED AS HIGH AS POSSIBLE.

PTAC-1
G.E. ZONELINE PACKAGE TERMINAL AIR CONDITIONER MODEL #AZ261H09D, 9,200 BTUH COOLING CAPACITY, 8,100 BTUH HEATING CAPACITY, 360 CFM. REFRIGERANT TYPE R-410A, 12.7 EER, VOLTAGE 230/1/60. PROVIDE WALL SLEEVE AND 30 AMP CORD SET FOR A NEMA 6-30R (230/208V, 30 AMP) RECEPTACLE.

EF-1
PROVIDE INLINE CENTRIFUGAL EXHAUST FAN, 1200 CFM @ .25" EXTERNAL STATIC PRESSURE, 120V SINGLE PHASE MOTOR, 735 WATTS. PROVIDE SPEED CONTROL. GREENHECK # CSP-A2150. PROVIDE EXPANDED METAL SCREEN OVER INLET. INTERLOCK FAN WITH MOTOR OPERATED DAMPER FOR L-1.

EF-2
PROVIDE CEILING MOUNTED, DIRECT-DRIVE CENTRIFUGAL EXHAUST FAN, 150 CFM @ .25" EXTERNAL STATIC PRESSURE, 120 VOLT SINGLE PHASE MOTOR, 48 WATTS. GREENHECK # SP-A200 PROVIDE WALL CAP # WC-8x8 @9'-4" AFF.

EF-3
PROVIDE INLINE CENTRIFUGAL EXHAUST FAN, 400 CFM @ 2.0" W.G. EXTERNAL STATIC PRESSURE, 3/4 H.P. 120V1 PH ELECTRIC MOTOR WITH STARTER AND DISCONNECT. COOK MODEL SQN-HP OR PRE-APPROVED EQUAL.

EF-4
PROVIDE INLINE CENTRIFUGAL EXHAUST FAN, 950 CFM @ 2.5" W.G. EXTERNAL STATIC PRESSURE, 1 H.P. 120V1 PH ELECTRIC MOTOR WITH STARTER AND DISCONNECT. COOK MODEL SQN-HP OR PRE-APPROVED EQUAL.

EF-5
GE SPACEMAKER 1.5 cu. ft. OVER-THE-RANGE MICROWAVE OVEN, 300 CFM , ,3-1/4" x10" RECTANGULAR DUCT AND WALL CAP MODEL # JNM1541DMBB COLOR BLACK

P-004
GRUNDFOS 96654390 UPS75-69F IRON BODY PUMP. 130 G.P.M. @ 25' HEAD, 1 $\frac{1}{2}$"H.P., 460/3/60. PUMP SHALL BE SELECTED FOR OPERATION WITH 50% GLYCOL.

P-006
GRUNDFOS 96402840 UPS50-80/2 IRON BODY PUMP 75 G.P.M. @ 10' HEAD, $\frac{3}{4}$ H.P, 460/3/60. PUMP SHALL BE SELECTED FOR OPERATION WITH 50% GLYCOL.

P-007
GRUNDFOS UPS15-58FC, 3-SPEED C.I. WET ROTOR PUMP WITH CHECK VALVE. .5 G.P.M. @ 7.5' HEAD, $\frac{1}{25}$ H.P., 120/1/60. PUMP SHALL BE SELECTED FOR OPERATION WITH 50% GLYCOL.

P-008
GRUNFOS 96403029 UPS32-80F. 3-SPEED C.I. PUMP WITH CHECK VALVE 23.2 GPM @ 18' HEAD, 310 WATTS, 120/1/60. PUMP SHALL BE SELECTED FOR OPERATION WITH 50% GLYCOL

P-012
GRUNFOS 96403025 UPS 32-40F 3-SPEED C.I. PUMP WITH CHECK VALVE 3 GPM @ 9' HEAD, 110 WATTS, 120/1/60. PUMP SHALL BE SELECTED FOR OPERATION WITH 50% GLYCOL.

L-1
PROVIDE & INSTALL RUSKIN #ELF635DDMP DRAINABLE STATIONARY LOUVER, EXTRUDED ALUMINUM, COVER TO MATCH BUILDING EXTERIOR, 16" WIDE x 16" HIGH x 6" DEEP WITH BIRDSCREEN. PROVIDE MOTOR OPERATED DAMPER INTERLOCKED WITH EF-1.

L-2
PROVIDE & INSTALL RUSKIN #ELF635DDMP DRAINABLE STATIONARY LOUVER, EXTRUDED ALUMINUM, COVER TO MATCH BUILDING EXTERIOR, 16" WIDE x 16" HIGH x 6" DEEP WITH BIRDSCREEN. PROVIDE GRAVITY OPERATED BACKDRAFT DAMPER.

GFS-1
GLYCOL FILL STATION- AXIOM INDUSTRIES LTD. #SF100 PACKAGED HYDRONIC FILL STATION. 55 GALLON TANK FOR STORAGE & MIXING. 120/1/60. INSTALL PER MANUFACTURES RECOMMENDATIONS.

AS-1
CALEFFI DISCAL AIR SEPARATOR #551100A. 4" FLANGED INLET & OUTLET.

ET-1
AMTROL 117-121 AX-120V ASME HYDRONIC EXPANSION TANK 125 P.S.I.

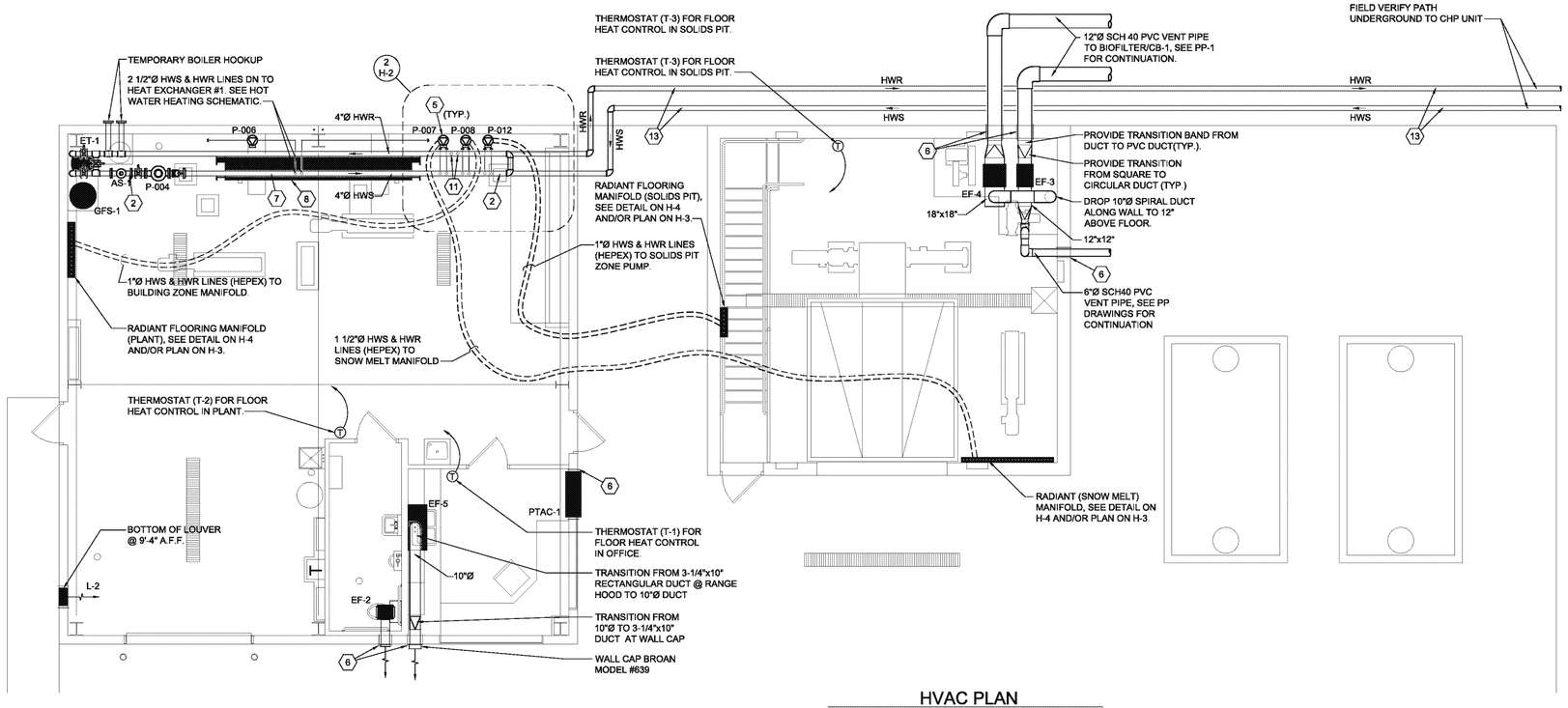

HVAC PLAN

SCALE: 3/16"=1'-0"

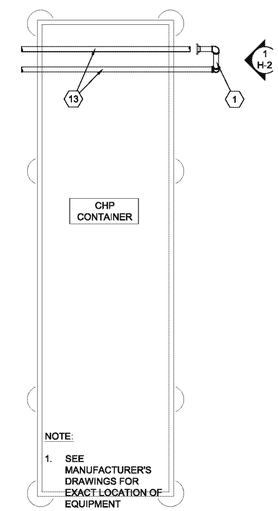

NOTE:

1. SEE MANUFACTURER'S DRAWINGS FOR EXACT LOCATION OF EQUIPMENT
2. SEE SITE DRAWINGS FOR EXACT LOCATION OF CHP

quasar energy group
7624 Riverview Road
PO Box 31023
Cleveland OH 44141
Phone: 216.986.9999

Scale:3/16"=1'-0"

This drawing contains valuable confidential and proprietary information that belongs to quasar energy group, llc ("quasar"), and is subject to a separate Confidentiality and Nondisclosure Agreement. quasar is the author and owner of this drawing, and retains all common law, statutory and other rights and privileges with respect hereto, including copyrights. The information contained herein may not at any time be used for any unauthorized purpose, nor reproduced by or provided to any third party, without the prior written consent of quasar.

STATE OF OHIO
ALAN R. JOHNSON
46333
REGISTERED
PROFESSIONAL ENGINEER

AS BUILT

Rev.	ECN Number	Date
2		
1		
0	AS BUILT	__/__/__

Drawing Name:
HVAC PLAN, ELEVATION, AND NOTES

Project Name and Address:
0058-CAR-OH-11

RINGLER FARMS
ADS Facility
ecoFarmsystem 980

2277 County Road 156
Cardington, OH 43315-9742

Area:
Author: RAMII
Calculated:
Checked: RN
Sheet Number: H-2

P:\SBE Projects\0058-CAR-OH-11 - Ringler Farms\BUILDING DRAWINGS\CURRENT DRAWINGS (AS BUILT)\RINGLER FARMS HVAC PLAN.dwg
11/15/2013 2:42 PM

© 2012, Quasar Energy Group, LLC. All rights reserved.

6 LOOP RADIANT FLOOR MANIFOLD ASSEMBLIES IN PLANT. DEDICATED ZONE CIRCULATOR PUMPS TO BE RACKED ON WALL, SEE H-2 FOR LOCATION. EXTENDED RIBBING DIRECTLY INTO SLAB, SEE DETAILS ON H-4.

3 LOOP RADIANT FLOOR MANIFOLD ASSEMBLIES IN SOLIDS RECEIVING PIT. DEDICATED ZONE CIRCULATOR PUMPS TO BE RACKED ON WALL IN PLANT, SEE H-2 FOR LOCATION. EXTENDED RIBBING DIRECTLY INTO SLAB, SEE DETAILS ON H-4.

SOLIDS RECEIVING PIT RADIANT FLOOR HEAT TUBING INSTALLED IN CONCRETE SLAB. 5/8"Ø PEX PIPE @ 9" O.C., REFER TO DETAILS ON H-4.

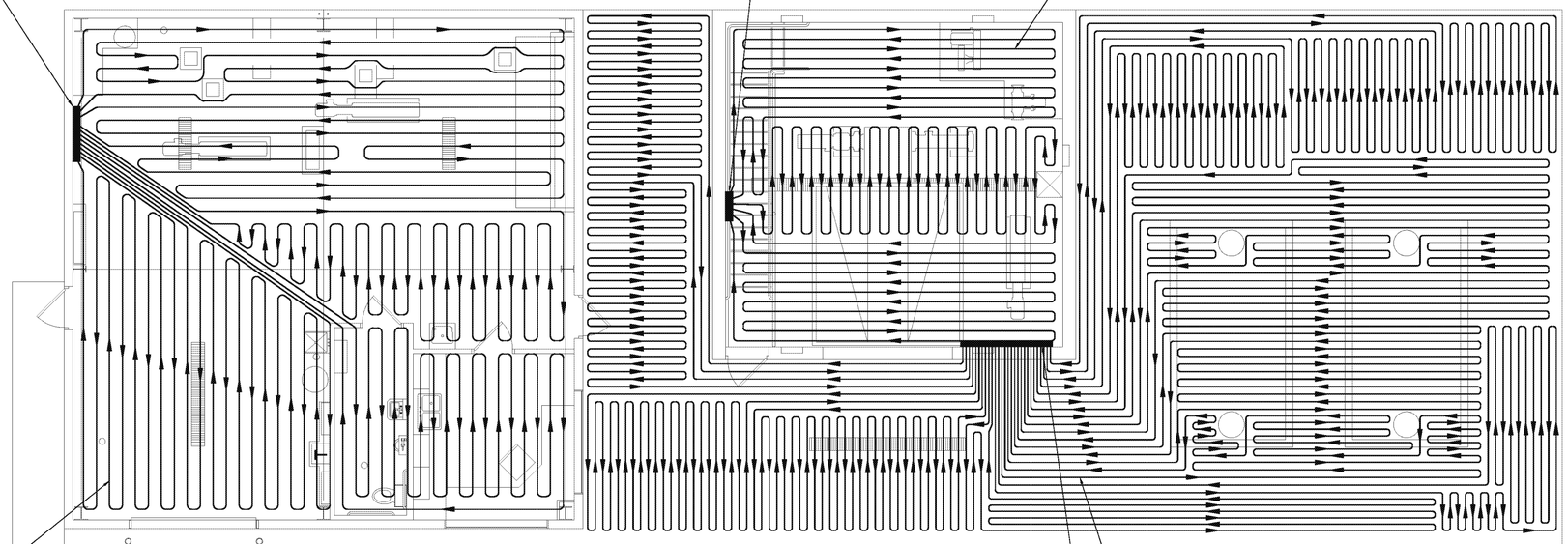

RADIANT FLOOR HEAT TUBING INSTALLED IN CONCRETE SLAB. 1/2"Ø PEX PIPE @ 12" O.C., REFER TO DETAILS ON H-4.

RADIANT SNOW MELT TUBING INSTALLED IN CONCRETE SLAB. 5/8"Ø PEX PIPE @ 7" O.C., REFER TO DETAILS ON H-4.

14 LOOP RADIANT SNOWMELT ZONE MANIFOLD ASSEMBLIES. DEDICATED ZONE CIRCULATOR PUMPS TO BE RACKED ON WALL IN PLANT, SEE H-2 FOR LOCATION. EXTEND RIBBING DIRECTLY INTO SLAB, SEE DETAILS ON H-4.

RADIANT FLOOR HEAT LAYOUT

SCALE: 3/16"=1'-0"

quasar energy group

quasar energy group
7624 Riverview Road
PO Box 31023
Cleveland OH 44141
Phone: 216.986.9999

Scale:3/16"=1'-0"

This drawing contains valuable confidential and proprietary information that belongs to quasar energy group, llc ("quasar"), and is subject to a separate Confidentiality and Nondisclosure Agreement. quasar is the author and owner of this drawing, and retains all common law, statutory and other rights and privileges with respect hereto, including copyrights. The information contained herein may not at any time be used for any unauthorized purpose, nor reproduced by or provided to any third party, without the prior written consent of quasar.

STATE OF OHIO
ALAN R. JOHNSON
46333
REGISTERED
PROFESSIONAL ENGINEER

AS BUILT

Rev.	ECN Number	Date
2		
1		
0	AS BUILT	__/__/__

Drawing Name:
FLOOR RADIANT HEAT PIPING LAYOUT

Project Name and Address:
0058-CAR-OH-11

RINGLER FARMS
ADS Facility
ecoFarmsystem 980

2277 County Road 156
Cardington, OH 43315-9742

Area: --

Author: RAMII

Calculated: ---

Checked: RN

Sheet Number: H-3

© 2012, Quasar Energy Group, LLC. All rights reserved.

P:\SBE Projects\0058-CAR-OH-11 - Ringler Farms\BUILDING DRAWINGS\CURRENT DRAWINGS (AS BUILT)\RINGLER FARMS HVAC PLAN.dwg
11/15/2013 2:41 PM

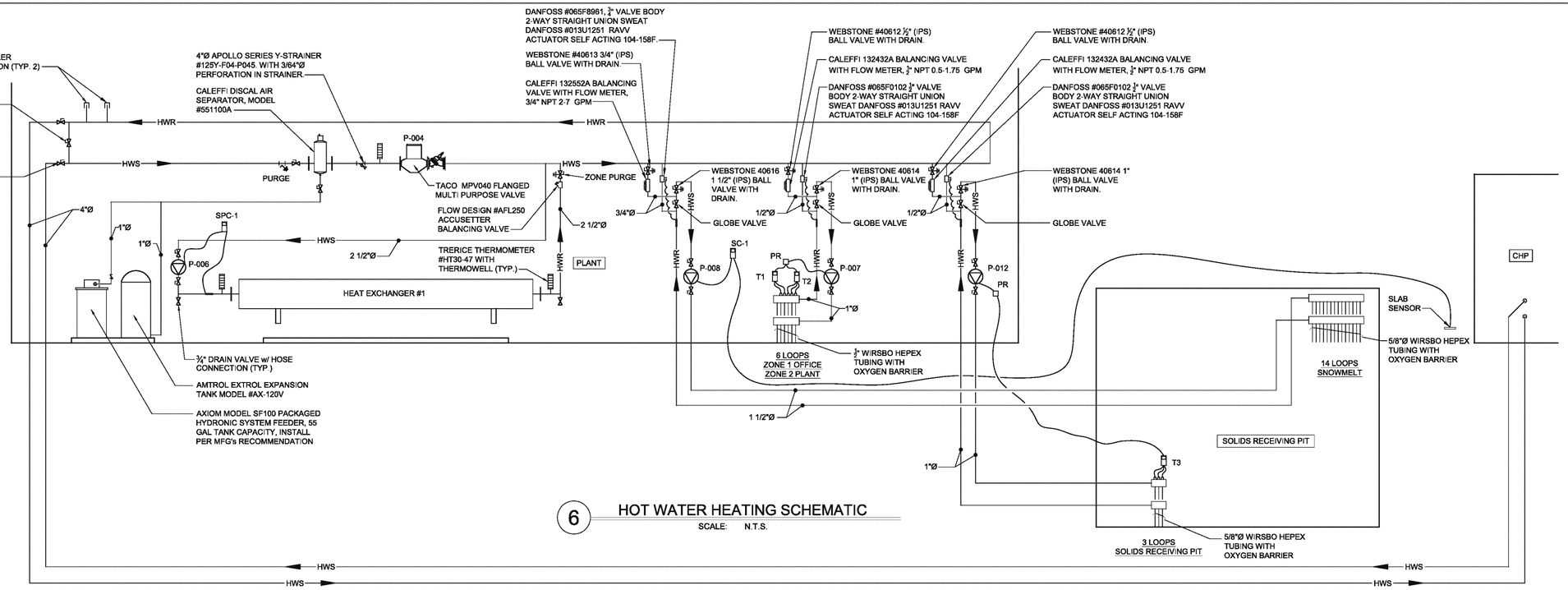

6 HOT WATER HEATING SCHEMATIC

SCALE: N.T.S.

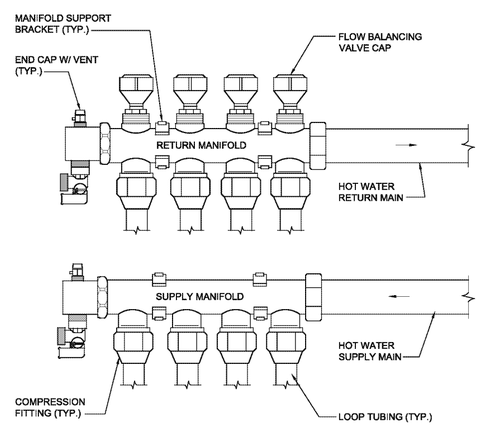

5 RADIANT FLOORING MANIFOLD DETAIL

SCALE: N.T.S.

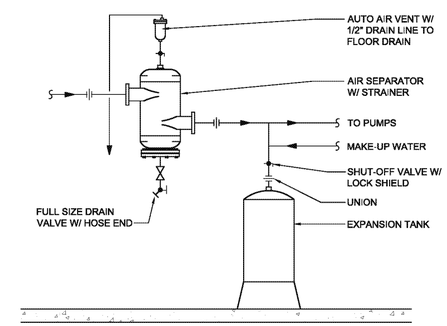

4 AIR SEPARATOR AND EXPANSION TANK DETAIL

SCALE: N.T.S

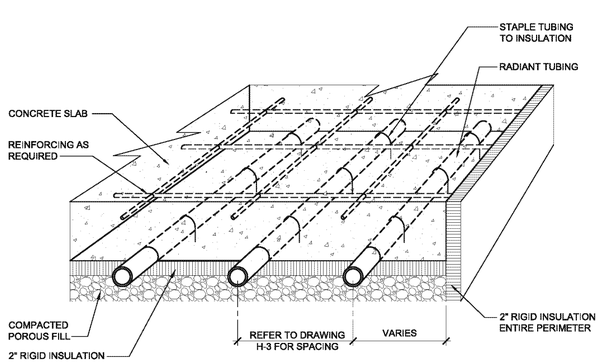

3 RADIANT TUBING INSTALLATION DETAIL

SCALE: N.T.S.

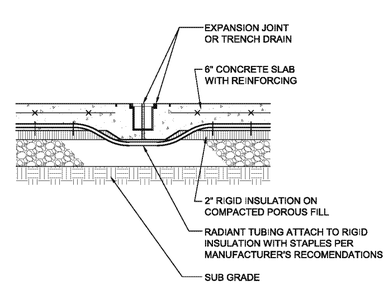

2 RADIANT TUBING INSTALLATION DETAIL

SCALE: 3/4"=1'-0"

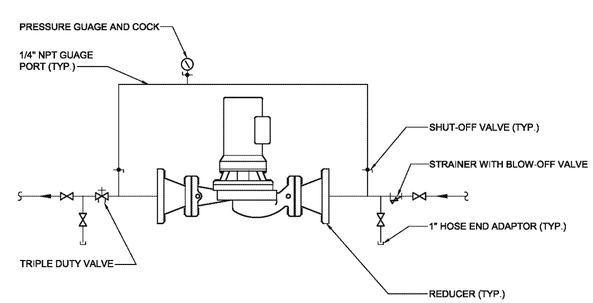

1 INLINE PUMP DETAIL

SCALE: N.T.S.

quasar energy group

quasar energy group
7624 Riverview Road
PO Box 31023
Cleveland OH 44141
Phone: 216.986.9999

Scale:SEE DETAIL

This drawing contains valuable confidential and proprietary information that belongs to quasar energy group, llc ("quasar"), and is subject to a separate Confidentiality and Nondisclosure Agreement. quasar is the author and owner of this drawing, and retains all common law, statutory and other rights and privileges with respect hereto, including copyrights. The information contained herein may not at any time be used for any unauthorized purpose, nor reproduced by or provided to any third party, without the prior written consent of quasar.

STATE OF OHIO
ALAN R. JOHNSON
46333
REGISTERED
PROFESSIONAL ENGINEER

AS BUILT

Rev.	ECN Number	Date
2		
1		
0	AS BUILT	__/__/__

Drawing Name:
HOT WATER HEATING SCHEMATIC AND DETAILS

Project Name and Address:
0058-CAR-OH-11

RINGLER FARMS
ADS Facility
ecoFarmsystem 980

2277 County Road 156
Cardington, OH 43315-9742

Area: __
Author: RAMII
Calculated: __
Checked: RN
Sheet Number: H-4

© 2012, Quasar Energy Group, LLC. All rights reserved.

P:\SBE Projects\0058-CAR-OH-11 - Ringler Farms\BUILDING DRAWINGS\CURRENT DRAWINGS (AS BUILT)\RINGLER FARMS HVAC PLAN.dwg
11/15/2013 2:39 PM

ABBREVIATIONS

A	
A	COMPRESSED AIR (SHOP AIR)
ABV	ABOVE
ACU	AIR CONDITIONING UNIT(S)
AD	ACCESS DOOR
AE	ANESTHESIA EVACUATION
AFF	ABOVE FINISHED FLOOR
AHU	AIR HANDLING UNIT(S)
AMB	AMBIENT
AMP	AMPERE
AP	ACCESS PANEL
APPROX	APPROXIMATE
AR	ARGON
ARCH	ARCHITECT
AUTO	AUTOMATIC
AV	ACID VENT
AVG	AVERAGE
AW	ACID WASTE
B	
BF	BELOW FLOOR
BFV	BUTTERFLY VALVE
BHP	BRAKE HORSEPOWER
BLDG	BUILDING
BOP	BOTTOM OF PIPE
BTU	BRITISH THERMAL UNIT
C	
CL	CENTERLINE
CAP	CAPACITY
CFH	CUBIC FEET PER HOUR
CFM	CUBIC FEET PER MINUTE
CO	CLEANOUT
CONN	CONNECTION OR CONNECT
CONT	CONTINUATION
C TO C	CENTER TO CENTER
CU FT	CUBIC FEET
CU IN	CUBIC INCH
CW	COLD WATER
D	
D	DRAIN
DCDA	DOUBLE CHECK DETECTOR ASSEMBLY
DEPT	DEPARTMENT
DIA	DIAMETER
DI	DEIONIZED WATER
DN	DOWN
DSP	DRY SPRINKLER LINE
DW	DISTILLED WATER
DWG	DRAWING
DWR	DRINKING WATER RETURN
DWS	DRINKING WATER SUPPLY
E	
EFF	EFFICIENCY
EL	ELEVATION
EQUIP	EQUIPMENT
EXH	EXHAUST
EXP	EXPANSION
EXIST	EXISTING
F	
F	FIRE PROTECTION WATER SUPPLY
°F	DEGREES FAHRENHEIT
FD	FLOOR DRAIN
FDC	FIRE DEPARTMENT CONNECTION
FDV	FIRE DEPARTMENT VALVE
FH	FIRE HYDRANT
FIN FL EL	FINISHED FLOOR ELEVATION
FOD	FUEL OIL DISCHARGE
FOF	FUEL OIL FILL
FOG	FUEL OIL GAUGE LINE
FOO	FUEL OIL OVER FLOW LINE
FOR	FUEL OIL RETURN
FOS	FUEL OIL SUPPLY
FOV	FUEL OIL TANK VENT
FP	FIRE PROTECTION
FS	FLOW SWITCH
FT	FOOT OR FEET
G	
G	LOW PRESSURE NATURAL GAS
GA	GAUGE
GAL	GALLONS
GPD	GALLONS PER DAY
GPH	GALLONS PER HOUR
GPM	GALLONS PER MINUTE
H	
H	HYDROGEN
HD	HEAD
HE	HELIUM
HGT	HEIGHT
HG	HIGH PRESSURE NATURAL GAS LINE
HP	HORSEPOWER
HR	HOUR(S)
HVAC	HEATING, VENTILATING AND AIR COND.
HW	HOT WATER (DOMESTIC)
HWR	HOT WATER RETURN (DOMESTIC)
HZ	HERTZ

I	
ID	INSIDE DIAMETER
IN	INCHES
INV EL	INVERT ELEVATION
IPS	IRON PIPE SIZE
IW	INDIRECT WASTE
K	
KW	KILOWATT
KWH	KILOWATT HOUR
L	
LB	POUNDS
LF	LINEAR FEET
LG	LABORATORY GAS
LN	LIQUID NITROGEN
LOX	LIQUID OXYGEN
LA	LABORATORY COMPRESSED AIR
LV	LABORATORY VACUUM
LCW	LABORATORY COLD WATER
LHW	LABORATORY HOT WATER
M	
MA	MEDICAL AIR
MAX	MAXIMUM
MBH	THOUSAND BTU PER HOUR
MCF	THOUSAND CUBIC FEET
MECH	MECHANICAL
MFG	MANUFACTURER
MG	MEDIUM PRESSURE NATURAL GAS LINE
MIN	MINIMUM
MV	MEDICAL VACUUM
N	
N2O	NITROUS OXIDE
N	NITROGEN
N/A	NOT APPLICABLE
NC	NORMALLY CLOSED
NIC	NOT IN CONTRACT
NO	NORMALLY OPEN
NO.	NUMBER
NPW	NON-POTABLE WATER
NTS	NOT TO SCALE
O	
O	OXYGEN
OD	OUTSIDE DIAMETER
OFCI	OWNER FURNISHED, CONTRACTOR INSTALLED
OS&Y	OUTSIDE STEM & YOKE VALVE
P	
PD	PUMPED DISCHARGE
PIV	POST INDICATOR VALVE
PLBG	PLUMBING
PPM	PARTS PER MILLION
PRESS	PRESSURE
PRV	PRESSURE REDUCING VALVE
PS	PRESSURE SWITCH OR FUEL POLISH SUPPLY
PSI	POUNDS PER SQUARE INCH
PSIG	PSI GAUGE
R	
RCP	RECIRCULATING PUMP
RCVR	RECEIVER
RD	ROOF DRAIN
RPBP	REDUCED PRESSURE BACKFLOW PREVENTER
RPM	REVOLUTIONS PER MINUTE
RO	REVERSE OSMOSIS WATER
RTU	ROOF TOP UNIT(S)
S	
SAN	SANITARY DRAIN
SEC	SECOND
SHT	SHEET
SP	FIRE PROTECTION BRANCH LINE
SPEC	SPECIFICATION
SRD	SECONDARY ROOF DRAIN
S	STORM DRAIN
STLST	STAINLESS STEEL
SS	SECONDARY STORM DRAIN
STD	STANDARD
STR	STRAINER
SW	SOFT POTABLE WATER
T	
TD	TRENCH DRAIN
TE	TOP ELEVATION
TEMP	TEMPERATURE
TMV	THERMOSTATIC MIXING VALVE
TS	TAMPER SWITCH
TW	TEMPERED WATER SUPPLY
TYP	TYPICAL
U	
UH	UNIT HEATER
UNO	UNLESS NOTED OTHERWISE
V	
V	VENT OR VOLT
VB	VACUUM BREAKER
VOL	VOLUME
VTR	VENT THRU ROOF
W	
W	WATT OR WATER
WG	WATER GAUGE
WGT	WEIGHT
WPD	WATER PRESSURE DROP
WPIV	SUPERVISED WALL POST INDICATOR VALVE
WW	WELL WATER

SYMBOL	DESCRIPTION
SAN	UNDERGROUND SANITARY WASTE
	SANITARY VENT
DCW	DOMESTIC (POTABLE) COLD WATER
DHW	DOMESTIC HOT WATER (xxx)°F
	DOMESTIC HOT WATER RETURN
NAME	NEW PIPE (SEE ABBREVIATIONS FOR DESIGNATION)
	ARROW INDICATES DIRECTION OF FLOW
	PIPE ELBOW UP, 90° OR 45°
	PIPE ELBOW DN, 90° OR 45°
	PIPE TEE UP
	PIPE TEE DOWN
	BRANCH, TOP CONNECTION
	GATE VALVE OR GENERAL SERVICE VALVE
	PLUG VALVE
	CHECK VALVE (ARROW INDICATES DIRECTION OF FLOW)
	BALL VALVE
	PRESSURE REDUCING VALVE
	SUPERVISED VALVE
	GAS PRESSURE REGULATOR
VB	VACUUM BREAKER
	REDUCED PRESSURE BACKFLOW PREVENTER
	OUTSIDE STEM & YOKE VALVE
	TEMPERATURE & PRESSURE RELIEF VALVE
	PIPE CAPPED
	PIPE GUIDES OR SLEEVES
	PITCH DOWN IN DIRECTION OF ARROW
	PRESSURE GAUGE WITH STOPCOCK
	STRAINER
	VALVE IN RISER
	THERMOMETER
M	METER
CO	CLEANOUT AT FLOOR OR AT GRADE
	PIPE UNION
	WATER HAMMER ARRESTOR - "A" INDICATES SIZE
FD	FLOOR DRAIN
FPHB	FROST PROOF HOSE BIBB
HB	HOSE BIBB
WH	WALL HYDRANT
YH	YARD HYDRANT
S	SANITARY STACK
L	LAVATORY, WALL MOUNTED
WC	WATER CLOSET, WALL HUNG OR FLOOR SET
SH	SHOWER & SHOWER HEAD
ES/EW	COMBINATION EMERGENCY SHOWER/EMERGENCY EYEWASH
FDC	FIRE DEPARTMENT CONNECTION
FS	FLOW SWITCH
C & DV	NPT FEMALE COUPLER AND DRAIN VALVE FOR COMPRESSED AIR LINES. MOUNT @ 40" AFF.

GENERAL NOTES

1. COORDINATE EXACT REQUIREMENTS AND LOCATION OF WORK WITH THE WORK OF OTHER TRADES PRIOR TO FABRICATION. PROVIDE ADDITIONAL OFF-SETS AND SECTIONS OF PIPING AS MAY BE REQUIRED TO MEET THE APPLICABLE JOB CONDITION REQUIREMENTS. VERIFY EXISTING JOB-SITE ELEVATIONS, DIMENSIONS, AND CONDITIONS, PRIOR TO FABRICATION OR INSTALLATION OF THE WORK. COORDINATE EXACT ROUTING OF PIPING WITH OTHER TRADES SO THAT NO CONFLICTS OCCUR WITH DUCTWORK, PIPING, LIGHTS, STRUCTURE, ETC.
2. ALL SEALS, BEARINGS, PACKINGS, AND ACCESSORIES FOR ALL EQUIPMENT AND/OR PIPING SPECIALTIES SHALL BE SUITABLE FOR THE CONTINUOUS OPERATIONAL TEMPERATURES, PRESSURES AND CHARACTERISTICS, OF THE SYSTEMS THEY SERVE.
3. VISIT THE SITE OF THE WORK AND DETERMINE AN EXACT KNOWLEDGE OF CONDITIONS AFFECTING THE EXECUTION OF WORK. AFTER VISITING THE SITE, REQUEST SUCH FURTHER INFORMATION AND/OR CLARIFICATIONS AS NECESSARY TO FULLY UNDERSTAND THE WORK REQUIRED AND TO PROPERLY ESTIMATE COSTS. THE RENDERING OF A PROPOSAL OR BID TO PERFORM THE WORK SHALL REPRESENT THAT THE SITE HAS BEEN VISITED AND ALL CONDITIONS AFFECTING PERFORMANCE OF THE CONTRACT HAVE BEEN NOTED.
4. PROVIDE NEW DOMESTIC WATER, SANITARY WASTE AND NATURAL GAS SYSTEMS FOR THIS BUILDING. PROVIDE ALL NECESSARY COMPONENTS FOR FULLY OPERATIONAL SYSTEM. INSTALL SYSTEMS IN ACCORDANCE WITH STATE REQUIREMENTS AND LOCAL AUTHORITY HAVING JURISDICTION.
5. COORDINATE THE LOCATION OF ALL UTILITY CONNECTION POINTS, FLOOR DRAINS AND HUB DRAINS FOR EQUIPMENT WITH OTHER TRADES.
6. AIR LINES ABOVE GRADE WITHIN THE BUILDING SHALL BE SCH.#40 BLACK IRON PIPE. AIR LINES BELOW GROUND SHALL BE HDPE. REFER TO PROCESS PIPING DRAWINGS FOR AIR LINES AT TANKS.
7. DCW & DHW LINES SHALL BE TYPE "K" COPPER. INSULATE LINES WITH 1"THICK FIBERGLASS INSULATION w/ A.S.J.
8. SANITARY AND VENT PIPING SHALL BE SCH#40 PVC WITH REQUIRED RATINGS & CERTIFICATIONS TO MEET LOCAL CODES.
9. ALL WORK SHALL BE PERFORMED IN ACCORDANCE WITH THE OHIO PLUMBING CODE (CURRENT EDITION).

quasar energy group

quasar energy group
7624 Riverview Road
PO Box 31023
Cleveland OH 44141
Phone: 216.986.9999

Scale: SEE DETAIL

This drawing contains valuable confidential and proprietary information that belongs to quasar energy group, llc ("quasar"), and is subject to a separate Confidentiality and Nondisclosure Agreement. quasar is the author and owner of this drawing, and retains all common law, statutory and other rights and privileges with respect hereto, including copyrights. The information contained herein may not at any time be used for any unauthorized purpose, nor reproduced by or provided to any third party, without the prior written consent of quasar.

STATE OF OHIO
ALAN R. JOHNSON
46333
REGISTERED
PROFESSIONAL ENGINEER

AS BUILT

Rev.	ECN Number	Date
2		
1		
0	AS BUILT	__/__/__

Drawing Name:
PLUMBING ABBREVIATIONS, SYMBOLS, AND NOTES

Project Name and Address:
0058-CAR-OH-11

RINGLER FARMS
ADS Facility
ecoFarmsystem 980

2277 County Road 156
Cardington, OH 43315-9742

Area:

Author: RAMII

Calculated:

Checked: RN

Sheet Number: P-1

© 2012, Quasar Energy Group, LLC. All rights reserved.

P:\SBE Projects\0058-CAR-OH-11 - Ringler Farms\BUILDING DRAWINGS\CURRENT DRAWINGS (AS BUILT)\RINGLER FARMS PLUMBING.dwg
11/18/2013 4:50 PM

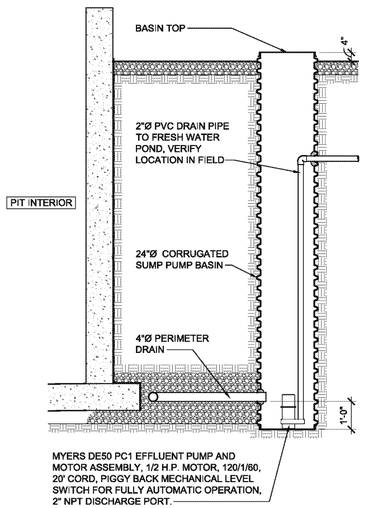

4 SUMP BASIN DETAIL

SCALE: 3/8"=1'-0"

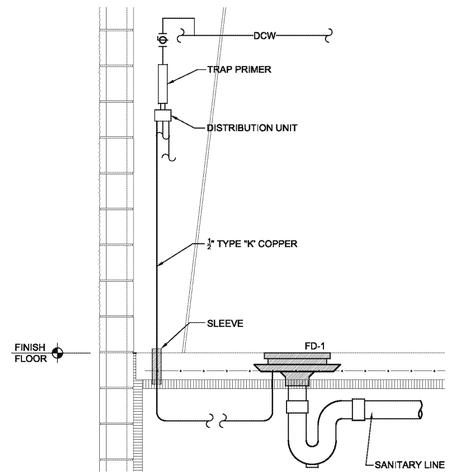

3 TRAP PRIMER DETAIL

SCALE: N.T.S

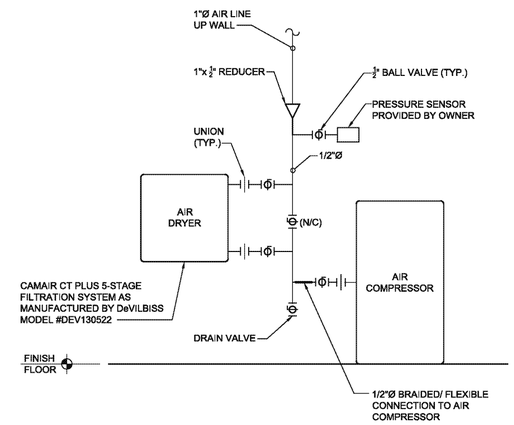

2 AIR COMPRESSOR DIAGRAM

SCALE: N.T.S

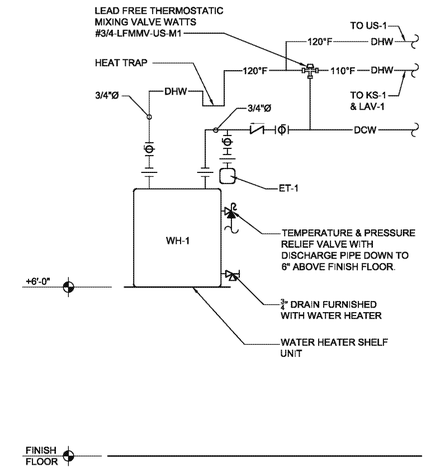

1 WH-1 DIAGRAM

SCALE: N.T.S

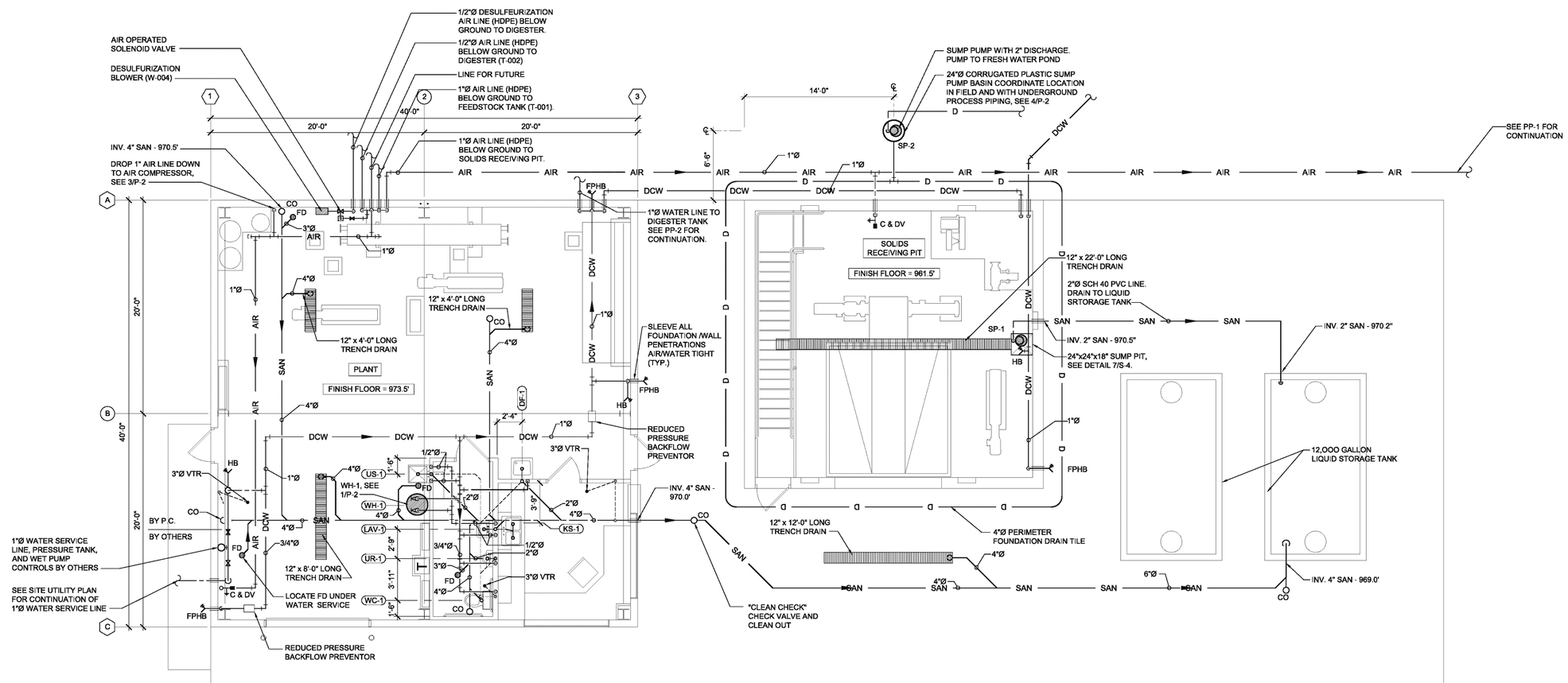

PLUMBING PLAN

SCALE: 3/16"=1'-0"

quasar energy group

quasar energy group
7624 Riverview Road
PO Box 31023
Cleveland OH 44141
Phone: 216.986.9999

Scale: SEE DETAIL

This drawing contains valuable confidential and proprietary information that belongs to quasar energy group, llc ("quasar"), and is subject to a separate Confidentiality and Nondisclosure Agreement. quasar is the author and owner of this drawing, and retains all common law, statutory and other rights and privileges with respect hereto, including copyrights. The information contained herein may not at any time be used for any unauthorized purpose, nor reproduced by or provided to any third party, without the prior written consent of quasar.

STATE OF OHIO
ALAN R. JOHNSON
46333
REGISTERED PROFESSIONAL ENGINEER

AS BUILT

Rev.	ECN Number	Date
2		
1		
0	AS BUILT	__/__/__

Drawing Name:

PLUMBING PLAN DETAILS

Project Name and Address:

0058-CAR-OH-11

RINGLER FARMS
ADS Facility
ecoFarmsystem 980

2277 County Road 156
Cardington, OH 43315-9742

Area:

Author: RAMII

Calculated:

Checked: RN

Sheet Number: P-2

© 2012, Quasar Energy Group, LLC. All rights reserved.

P:\SBE Projects\0058-CAR-OH-11 - Ringler Farms\BUILDING DRAWINGS\CURRENT DRAWINGS (AS BUILT)\RINGLER FARMS PLUMBING.dwg
11/19/2013 4:50 PM

PLUMBING FIXTURE SCHEDULE

TAG	DESCRIPTION	FIXTURE		TRIM		SUPPLY/STOP		MISC.		ROUGH-INS					REMARKS
		MFR	MODEL	MFR	MODEL	MFR	MODEL	MFR	MODEL	WASTE	TRAP	VENT	CW	HW	
WC-1	ADA COMPLIANT SIPHON-JET ACTION, ELONGATED BOWL, CLOSE COUPLED TANK, FREE-STANDING, 16-1/2" HIGH TO RIM, WHITE VITREOUS CHINA, BOLT CAPS, EVERCLEAN SURFACE, 1.6 GPF, SEAT: SEAT FOR ELONGATED BOWL, OPEN FRONT, STAINLESS STEEL HINGE WITH CHECK, COLOR WHITE. SUPPLY PIPE WITH QUARTER TURN BALL STOP, CHROME PLATED TRIP LEVER, PISTON ACTION FLUSH, 2-3/8" GLAZED TRAPWAY.	AMERICAN STANDARD	2058.014	N/A	N/A	MCGUIRE	BV2166	CHURCH	295C	4"	INTEGRAL	2"	1/2"	N/A	N/A
LAV-1	WHITE VITREOUS CHINA, WALL-HUNG, 20" X 18", FAUCET HOLES 8" CENTERS, FRONT OVERFLOW. COMBINATION FAUCET, CERAMIC CARTRIDGE, 8" CENTERS, LEVER HANDLES, INTEGRAL GRID DRAIN, ADA-COMPLIANT. SUPPLY PIPE WITH QUARTER TURN BALL STOPS, 1-1/4" X 1-1/4" CAST BRASS P-TRAP WITH CLEAN-OUT.	AMERICAN STANDARD	0356.015	CHICAGO	404-CP	McGUIRE	BV2165	MCGUIRE	155A	1-1/2"	1-1/4"x1-1/2"	1-1/2"	1/2"	1/2"	29" FROM FLOOR TO BOTTOM OF APRON. PROVIDE P-TRAP EQUAL TO MCGUIRE 8872.
US-1	MOLDED STONE (PLASTIC) LAUNDRY TUB STYLE SINK WITH MANUFACTURERS BAKED ENAMEL LEG KIT	FIAT	FL-1	SYMMONS	S-245-LWG	McGUIRE	BV216	N/A	N/A	1-1/2"	1-1/4"X1-1/2"	N/A	1/2"	1/2"	
FD	ZURN #Z415B BODY ASSEMBLY w/ TYPE "B" (POLISHED NICKEL BRONZE) STRAINER	ZURN	Z415B	-	-	-	-	-	-	3" OR 4" (SEE PLAN)	PROVIDE DEEP SEAL TRAP	-	-	-	N/A
DF-1	WALL MOUNTED ADA COMPLIANT ELECTRIC WATER COOLER.	ELKAY	EZ04	-	-	McGUIRE	BV2165	-	-	1-1/4"	1-1/4"X1-1/2"	1-1/2"	1/2"	-	120 VOLT
UR-1	WALL MOUNTED, ADA COMPLIANT URINAL	AMERICAN STANDARD	6590.005	SLOAN ROYAL	186-1.0	-	-	-	-	2"	INTEGRAL	2"	3/4"	-	
KS-1	TOP MOUNTED STAINLESS STEEL DOUBLE COMPARTMENT SINK w/ FAUCET AND STRAINER BASKETS	ELKAY	-	MOEN	-	McGUIRE	BV2165	-	-	1-1/2"	1-1/2"	1-1/2"	1/2"	1/2"	

EXPANSION TANK SCHEDULE

TAG	SERVICE	BASIS OF DESIGN	MODEL NO.	CAPACITY (GAL)	REMARKS
ET-1	EWH-1	AMTROL	ST-5-C	2.1	CHARGE TO INCOMING WATER PRESSURE AFTER RPBP

DOMESTIC ELECTRIC WATER HEATER SCHEDULE

TAG	LOCATION	FUEL	ELECTRIC		INPUT (WATTS)	STORAGE (GAL)	RECOVERY @90°F (GPH)	FLUE SIZE (IN)	INTAKE SIZE	MF'R	MODEL	REMARKS
			VOLT	PH								
WH-1	PLANT	-	120	1	2000	6	-	-	N/A	RUUD	PEP6-1	SET DISCHARGE TEMP. TO 120°F.

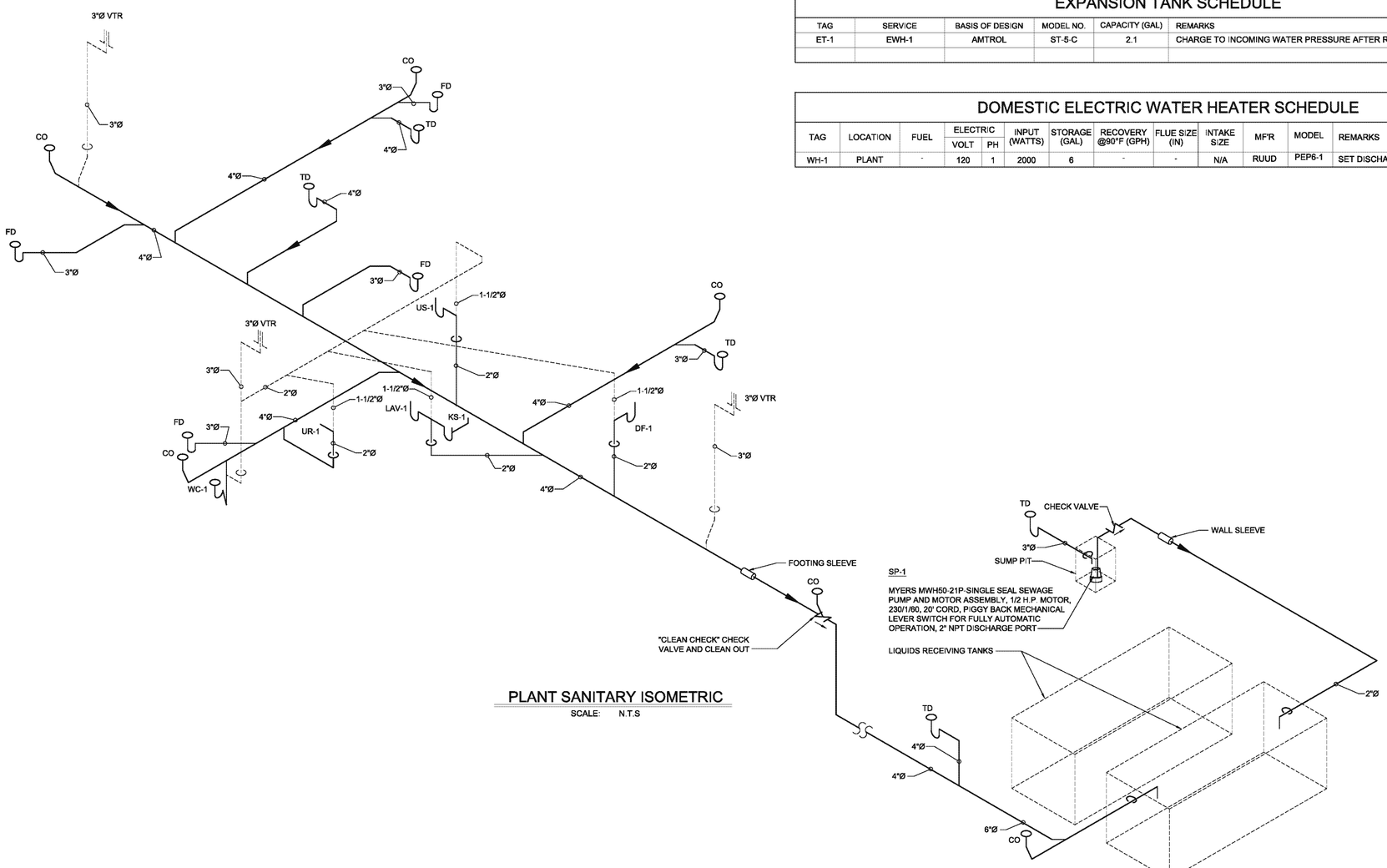

PLANT SANITARY ISOMETRIC

SCALE: N.T.S

quasar energy group

quasar energy group
7624 Riverview Road
PO Box 31023
Cleveland OH 44141
Phone: 216.986.9999

Scale: SEE DETAIL

This drawing contains valuable confidential and proprietary information that belongs to quasar energy group, llc ("quasar"), and is subject to a separate Confidentiality and Nondisclosure Agreement. quasar is the author and owner of this drawing, and retains all common law, statutory and other rights and privileges with respect hereto, including copyrights. The information contained herein may not at any time be used for any unauthorized purpose, nor reproduced by or provided to any third party, without the prior written consent of quasar.

STATE OF OHIO
ALAN R. JOHNSON
46333
REGISTERED PROFESSIONAL ENGINEER

AS BUILT

Rev.	ECN Number	Date
2		
1		
0	AS BUILT	__/__/__

Drawing Name:
SANITARY ISOMETRIC PUMBING FIXTURE SCHEDULE

Project Name and Address:
0058-CAR-OH-11

RINGLER FARMS
ADS Facility
ecoFarmsystem 980

2277 County Road 156
Cardington, OH 43315-9742

Area:

Author: RAMII

Calculated:

Checked: RN

Sheet Number: P-3

© 2012, Quasar Energy Group, LLC. All rights reserved.

P:\SBE Projects\0058-CAR-OH-11 - Ringer Farms\BUILDING DRAWINGS\CURRENT DRAWINGS (AS BUILT)\RINGLER FARMS PLUMBING.dwg
11/16/2015 4:49 PM

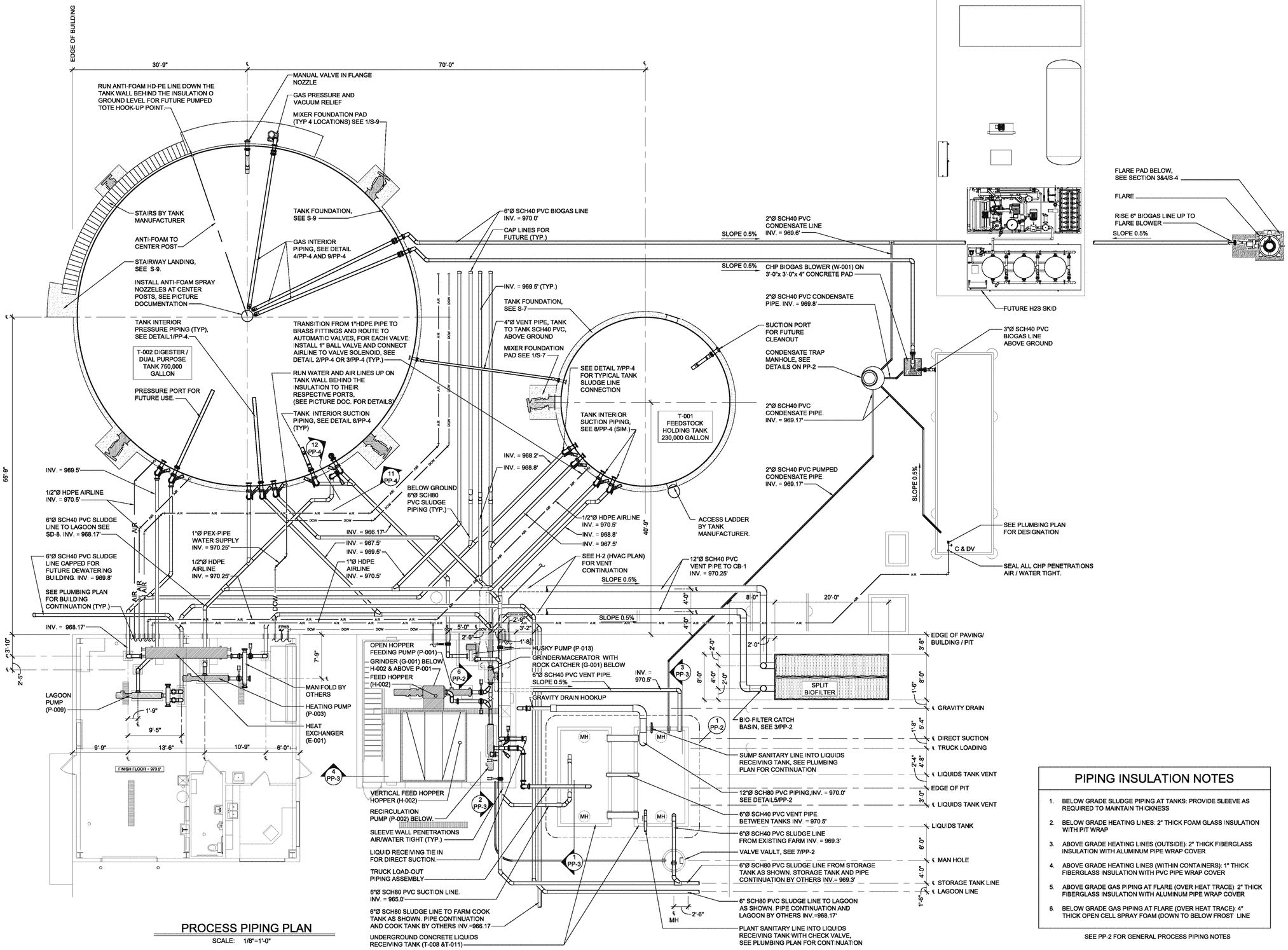

PROCESS PIPING PLAN

SCALE: 1/8"=1'-0"

PIPING INSULATION NOTES

1. BELOW GRADE SLUDGE PIPING AT TANKS: PROVIDE SLEEVE AS REQUIRED TO MAINTAIN THICKNESS
2. BELOW GRADE HEATING LINES: 2" THICK FOAM GLASS INSULATION WITH PIT WRAP
3. ABOVE GRADE HEATING LINES (OUTSIDE): 2" THICK FIBERGLASS INSULATION WITH ALUMINUM PIPE WRAP COVER
4. ABOVE GRADE HEATING LINES (WITHIN CONTAINERS): 1" THICK FIBERGLASS INSULATION WITH PVC PIPE WRAP COVER
5. ABOVE GRADE GAS PIPING AT FLARE (OVER HEAT TRACE): 2" THICK FIBERGLASS INSULATION WITH ALUMINUM PIPE WRAP COVER
6. BELOW GRADE GAS PIPING AT FLARE (OVER HEAT TRACE): 4" THICK OPEN CELL SPRAY FOAM (DOWN TO BELOW FROST LINE

SEE PP-2 FOR GENERAL PROCESS PIPING NOTES

quasar energy group
7624 Riverview Road
PO Box 31023
Cleveland OH 44141
Phone: 216.986.9999

Scale: 1/8"=1'-0"

This drawing contains valuable confidential and proprietary information that belongs to quasar energy group, llc ("quasar"), and is subject to a separate Confidentiality and Nondisclosure Agreement. quasar is the author and owner of this drawing, and retains all common law, statutory and other rights and privileges with respect hereto, including copyrights. The information contained herein may not at any time be used for any unauthorized purpose, nor reproduced by or provided to any third party, without the prior written consent of quasar.

STATE OF OHIO
ALAN R. JOHNSON
46339
REGISTERED
PROFESSIONAL ENGINEER

AS BUILT

Rev.	ECN Number	Date
2		
1		
0	AS BUILT	__/__/__

Drawing Name:
PROCESS PIPING PLAN

Project Name and Address:
0058-CAR-OH-11

RINGLER FARMS
ADS Facility
ecoFarmsystem 980

2277 County Road 156
Cardington, OH 43315-9742

Area:

Author: RAMII

Checked: RN

Sheet Number: PP-1

© 2012, Quasar Energy Group, LLC. All rights reserved.

P:\SBE Projects\0058-CAR-OH-11 - Ringler Farms\BUILDING DRAWINGS\CURRENT DRAWINGS (AS BUILT)\RINGLER FARMS PROCESS PIPING.dwg
11/15/2013 2:46 PM

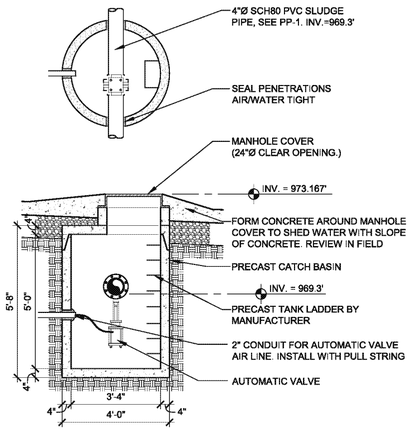

7 VALVE VAULT DETAIL

SCALE: 3/8"=1'-0"

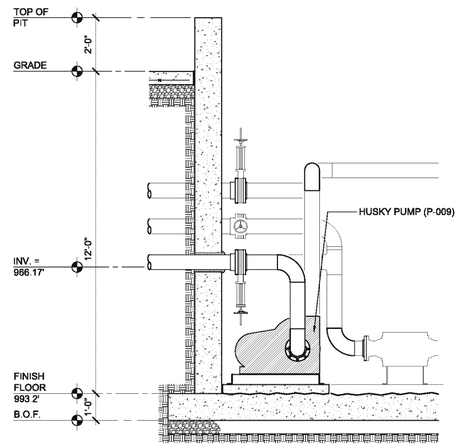

6 PIT SECTION

SCALE: 3/8"=1'-0"

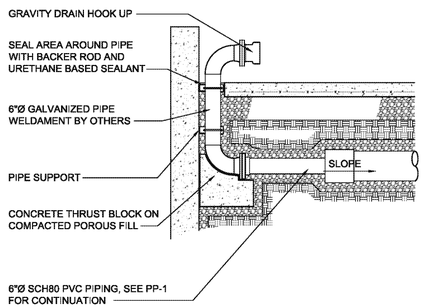

5 LIQUIDS TANK GRAVITY DRAIN DETAIL

SCALE: 3/8"=1'-0"

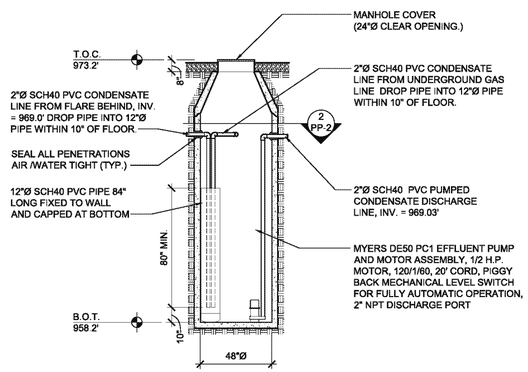

4 CONDENSATE TRAP SECTION

SCALE: 1/4"=1'-0"

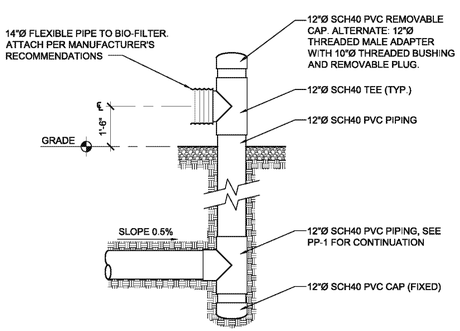

3 BIO-FILTER CB-1 DETAIL

SCALE: 3/8"=1'-0"

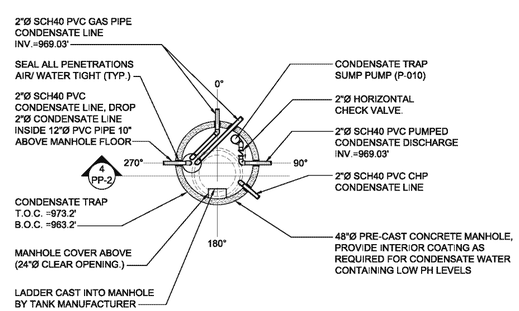

2 CONDENSATE TRAP PLAN

SCALE: 1/4"=1'-0"

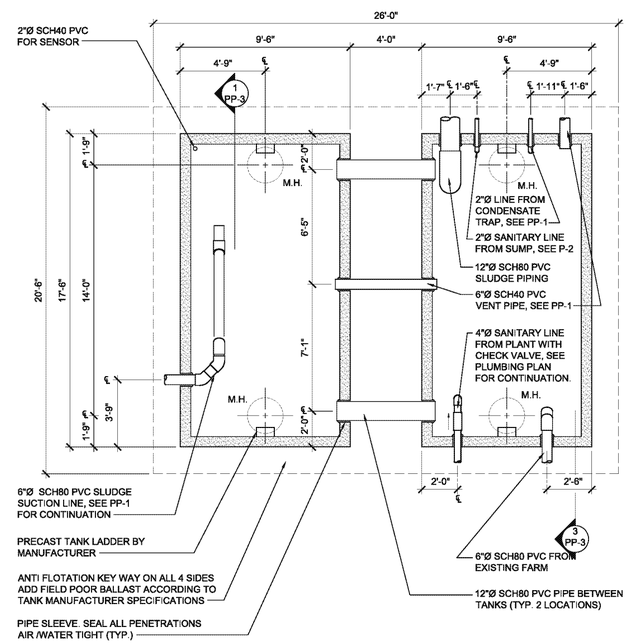

1 LIQUIDS RECIEVING TANK PLAN

SCALE: 1/4"=1'-0"

GENERAL NOTES

1. ALL 90° TURNS SHALL BE ACCOMPLISHED BY USING LONG RADIUS 90° ELBOWS OR (2) 45° ELBOWS. NO SHORT RADIUS 90° ELBOWS ARE ALLOWED FOR THE PROCESS PIPING.
2. ALL SCHEDULE 80 PVC PIPING SHALL CONFORM TO PRESSURE PIPE AND FITTING SYSTEM. THIS SYSTEM IS INTENDED FOR PRESSURE APPLICATIONS. PIPE AND FITTINGS SHALL BE MANUFACTURED FROM VIRGIN RIGID PVC VINYL COMPOUNDS WITH A CELL CLASS OF 12454 AS IDENTIFIED IN ASTM D 1784. PVC SCHEDULE 80 PIPE SHALL BE IRON PIPE SIZE (IPS) CONFORMING TO ASTM D 1785. PVC SCHEDULE FITTINGS SHALL CONFORM TO ASTM D 2467. ALL PIPE AND FITTINGS SHALL BE MANUFACTURED BY THE SAME MANUFACTURER. SOLVENT CEMENT JOINTS SHALL BE MADE IN A TWO STEP PROCESS WITH PRIMER MANUFACTURED FOR THERMOPLASTIC PIPING SYSTEMS AND SOLVENT CEMENT CONFORMING TO ASTM D 2564.
3. ALL SCHEDULE 40 PVC PIPING SHALL CONFORM TO PRESSURE PIPE AND FITTING SYSTEM. THIS SYSTEM IS INTENDED FOR PRESSURE APPLICATIONS. PIPE AND FITTINGS SHALL BE MANUFACTURED FROM VIRGIN RIGID VINYL COMPOUNDS WITH A CELL CLASS OF 12454 AS IDENTIFIED IN ASTM D 1784. PVC SCHEDULE 40 PIPE SHALL BE IRON PIPE SIZE (IPS) CONFORMING TO ASTM D 1785. PVC SCHEDULE 40 FITTINGS SHALL CONFORM TO ASTM D 2466. PIPE AND FITTINGS SHALL BE MANUFACTURED AS A SYSTEM AND BE THE PRODUCT OF ONE MANUFACTURER. SOLVENT CEMENT JOINTS SHALL BE MADE IN A TWO STEP PROCESS WITH PRIMER MANUFACTURED FOR THERMOPLASTIC PIPING SYSTEMS AND SOLVENT CEMENT CONFORMING TO ASTM D 2564. INSTALL 1/2" STYROFOAM AROUND ALL PVC PIPING WHEN COMING UP OR DOWN THROUGH CONCRETE PADS OR FLOORS.
4. ALL DUCTILE IRON PIPE, SPECIALS, AND FITTINGS SHALL BE LINED WITH CEMENT LINING AND EXTERIOR-COATED WITH AN ASPHALTIC COATING IN ACCORDANCE WITH AWWA C104. DUCTILE IRON FITTINGS: FITTINGS SHALL BE IN ACCORDANCE WITH AWWA C110, AWWA C153, OR AWWA C606, LATEST REVISIONS.UNLESS OTHERWISE SPECIFIED, GASKET MATERIAL SHALL BE STANDARD STYRENE BUTADIENE COPOLYMER (SBR) PER THIS STANDARD.
5. FLANGED JOINTS - THREADED COMPANION FLANGES FOR DUCTILE IRON PIPE SHALL BE DUCTILE IRON IN ACCORDANCE WITH AWWA C115, NOT ANSI B16.1. BOLT CIRCLE AND BOLT HOLES MATCH THOSE OF ANSI B16.1 CLASS 125 AND ANSI B16.5 CLASS 150 FLANGES. THE FLANGES SHALL BE RATED FOR AT LEAST 250 PSI WORKING PRESSURE. THE THREADED FLANGES SHALL BE INDIVIDUALLY FITTED AND MACHINE TIGHTENED ON THE PIPE ENDS. BOLTS, GASKETS, AND INSTALLATION SHALL BE IN ACCORDANCE WITH AWWA C115. GASKETS FOR FLANGED DUCTILE IRON PIPE MUST NOT HAVE THE LARGER INSIDE DIAMETERS PROVIDED BY THE REQUIREMENTS OF ANSI B16.21. FLANGE FACING SHALL BE SMOOTH OR WITH SHALLOW SERRATIONS PER AWWA C115.
6. FLANGED JOINTS - FITTINGS: FLANGE FITTINGS SHALL BE DUCTILE IRON IN ACCORDANCE WITH AWWA C110 OR AWWA C153, NOT ANSI B16.1. BOLT CIRCLE AND BOLT HOLES MATCH THOSE OF ANSI B16.1 CLASS 125 AND ANSI B16.5 CLASS 150 FLANGES. THE FLANGES SHALL BE RATED FOR AT LEAST 250 PSI WORKING PRESSURE. BOLTS, GASKETS, AND INSTALLATION SHALL BE IN ACCORDANCE WITH AWWA C110 OR AWWA C115. GASKETS FOR FLANGED DUCTILE IRON PIPE MUST NOT HAVE THE LARGER INSIDE DIAMETERS PROVIDED BY THE REQUIREMENTS OF ANSI B16.21. FLANGE FACING SHALL BE SMOOTH OR WITH SHALLOW SERRATIONS PER AWWA C110 OR AWWA C153.
7. ALL BURIED PIPING SHALL BE BEDDED AND COVERED WITH #8 WASHED GRAVEL. PROVIDE MINIMUM OF 6" AROUND PIPE.
8. ALL UNDERGROUND PROCESS PIPING SHALL BE HYDRO-TESTED AT 100 PSI FOR 4-HOURS.
9. PROVIDE AND INSTALL THRUST BLOCKING ON ALL UNDERGROUND SLUDGE LINE FITTING.
10. A 1" AIR LINE (HDPE) SHALL ACCOMPANY PROCESS LINES AS SHOWN. AIR LINE SHALL BE INSTALLED BY PLUMBING CONTRACTOR.

quasar energy group
7624 Riverview Road
PO Box 31023
Cleveland OH 44141
Phone: 216.986.9999

Scale: SEE DETAIL

This drawing contains valuable confidential and proprietary information that belongs to quasar energy group, llc ("quasar"), and is subject to a separate Confidentiality and Nondisclosure Agreement. quasar is the author and owner of this drawing, and retains all common law, statutory and other rights and privileges with respect hereto, including copyrights. The information contained herein may not at any time be used for any unauthorized purpose, nor reproduced by or provided to any third party, without the prior written consent of quasar.

STATE OF OHIO
ALAN R. JOHNSON
46333
REGISTERED
PROFESSIONAL ENGINEER

AS BUILT

Rev.	ECN Number	Date
2		
1		
0	AS BUILT	__/__/__

Drawing Name:
PROCESS PIPING DETAILS

Project Name and Address:
0058-CAR-OH-11

RINGLER FARMS
ADS Facility
ecoFarmsystem 980

2277 County Road 156
Cardington, OH 43315-9742

Area:
Author: RAMII
Calculated:
Checked: RN
Sheet Number: PP-2

© 2012, Quasar Energy Group, LLC. All rights reserved.

P:\SBE Projects\0058-CAR-OH-11 - Ringler Farms\BUILDING DRAWINGS\CURRENT DRAWINGS (AS BUILT)\RINGLER FARMS PROCESS PIPING.dwg
11/15/2013 2:45 PM

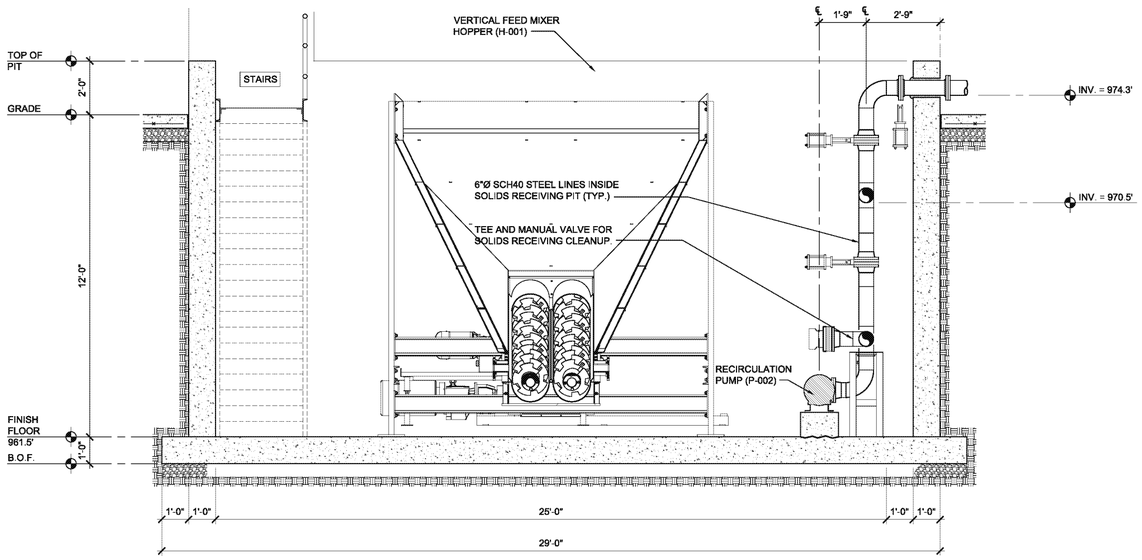

4 PROCESS PIPING SOLIDS RECEIVING SECTION

SCALE: 3/8"=1'-0"

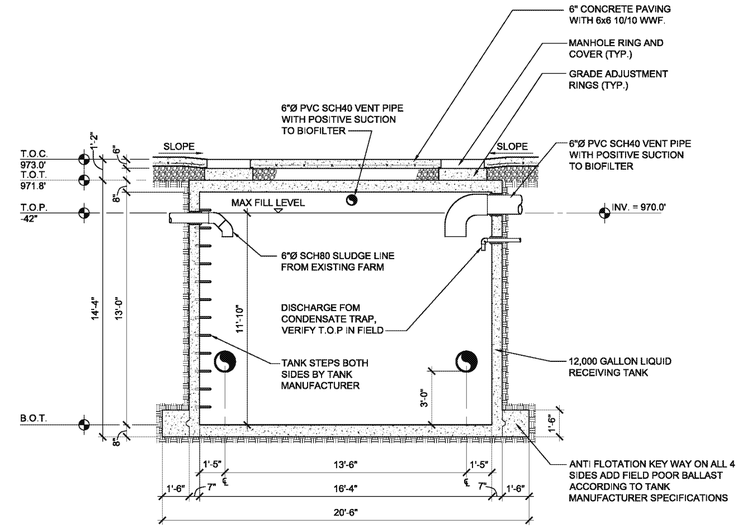

3 LIQUIDS RECIEVING TANK SECTION

SCALE: 1/4"=1'-0"

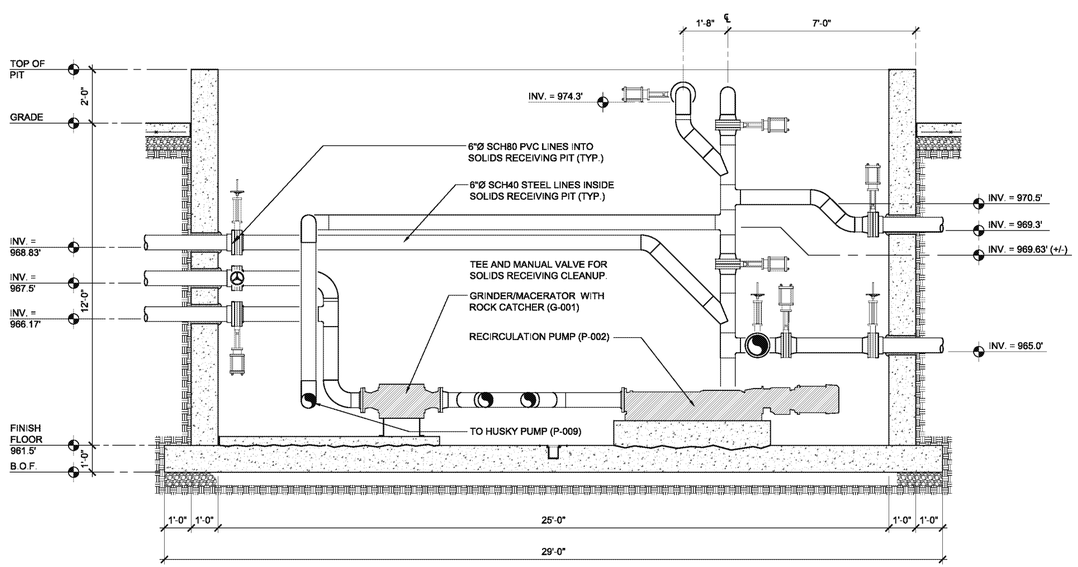

2 PROCESS PIPING SOLIDS RECEIVING SECTION

SCALE: 3/8"=1'-0"

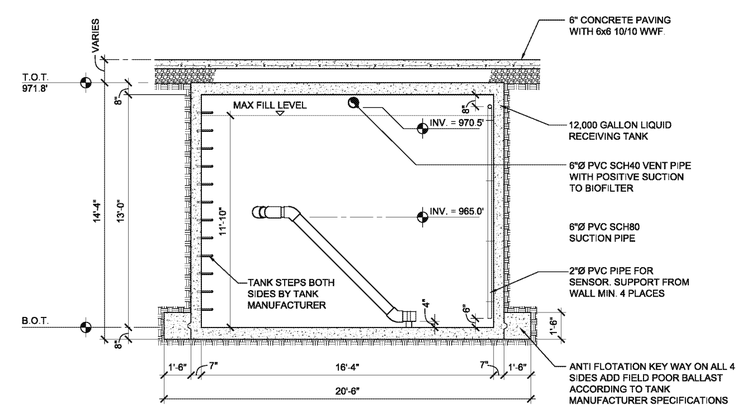

1 LIQUIDS RECIEVING TANK SECTION

SCALE: 1/4"=1'-0"

quasar energy group
7624 Riverview Road
PO Box 31023
Cleveland OH 44141
Phone: 216.986.9999

Scale: SEE DETAIL

This drawing contains valuable confidential and proprietary information that belongs to quasar energy group, llc ("quasar"), and is subject to a separate Confidentiality and Nondisclosure Agreement. quasar is the author and owner of this drawing, and retains all common law, statutory and other rights and privileges with respect hereto, including copyrights. The information contained herein may not at any time be used for any unauthorized purpose, nor reproduced by or provided to any third party, without the prior written consent of quasar.

STATE OF OHIO
ALAN R. JOHNSON
46333
REGISTERED
PROFESSIONAL ENGINEER

AS BUILT

Rev.	ECN Number	Date
2		
1		
0	AS BUILT	__/__/__

Drawing Name:
PROCESS PIPING DETAILS

Project Name and Address:
0058-CAR-OH-11

RINGLER FARMS
ADS Facility
ecoFarmsystem 980

2277 County Road 156
Cardington, OH 43315-9742

Area:

Author: RAMII

Calculated:

Checked: RN

Sheet Number: PP-3

© 2012, Quasar Energy Group, LLC. All rights reserved.

P:\SBE Projects\0058-CAR-OH-11 - Ringler Farms\BUILDING DRAWINGS\CURRENT DRAWINGS (AS BUILT)\RINGLER FARMS PROCESS PIPING.dwg
11/15/2013 2:44 PM

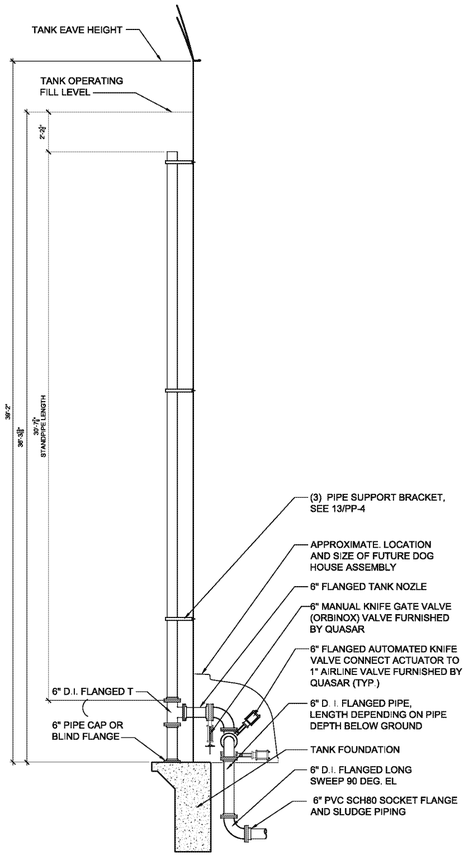

12 TANK INTERIOR STANDPIPE PIPING
SCALE: 1/4"=1'-0"

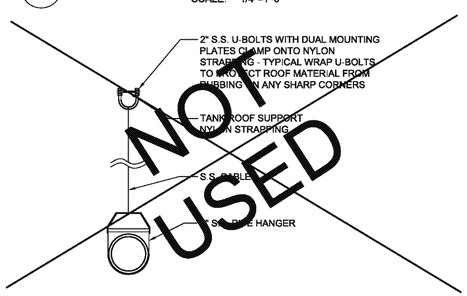

6 GAS PIPING HANGER DETAIL (TYP.)
SCALE: N.T.S.

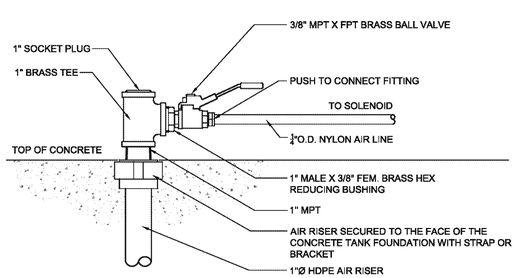

3 1"Ø AIRLINE TO AUTO-VALVE SOLINOID
SCALE: N.T.S.

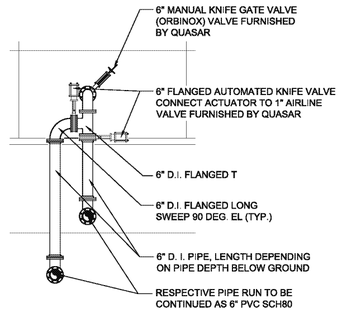

11 TANK EXTERIOR STANDPIPE PIPING
SCALE: 1/4"=1'-0"

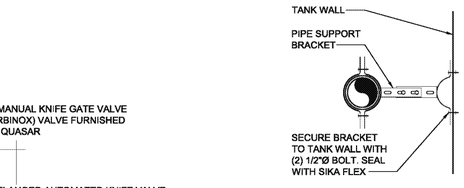

13 PRESSURE SENSOR DETAIL
SCALE: 1-1/2"=1'-0"

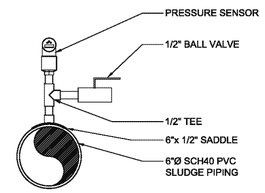

10 PRESSURE SENSOR DETAIL
SCALE: 1-1/2"=1'-0"

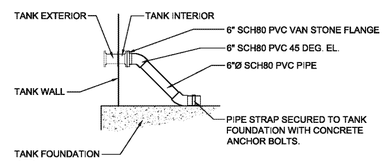

8 TANK INTERIOR SUCTION LINE PIPING
SCALE: 1/4"=1'-0"

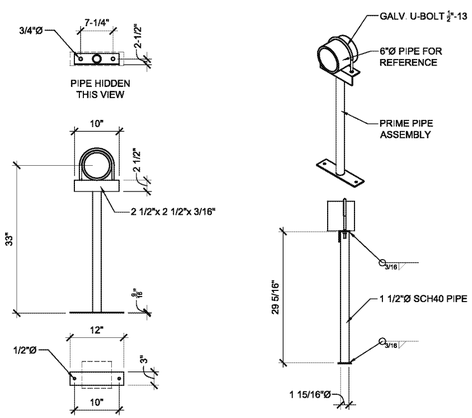

5 PIPE SUPPORT WELDAMENT DETAILS
SCALE: 1/4"=1'-0"

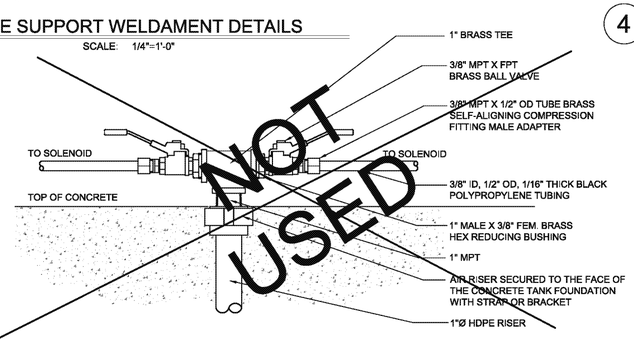

2 1"Ø AIRLINES TO AUTO-VALVE SOLINOIDS
SCALE: N.T.S.

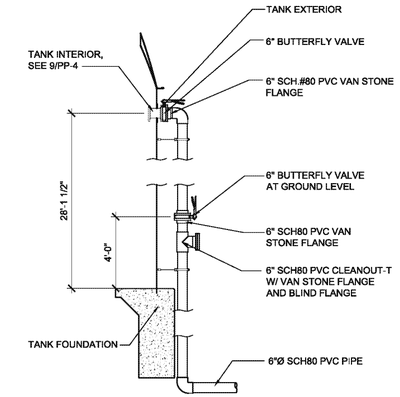

9 GAS PIPING TANK CONNECTION (TYP.)
SCALE: 1/4"=1'-0"

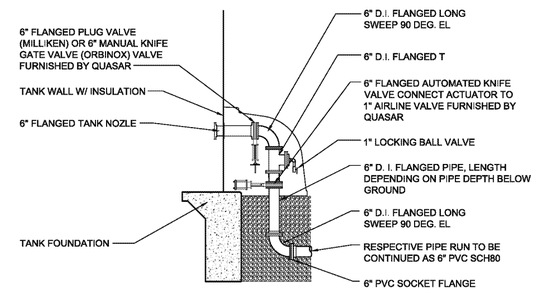

7 SLUDGE PIPING TANK CONNECTION (TYP.)
SCALE: 1/4"=1'-0"

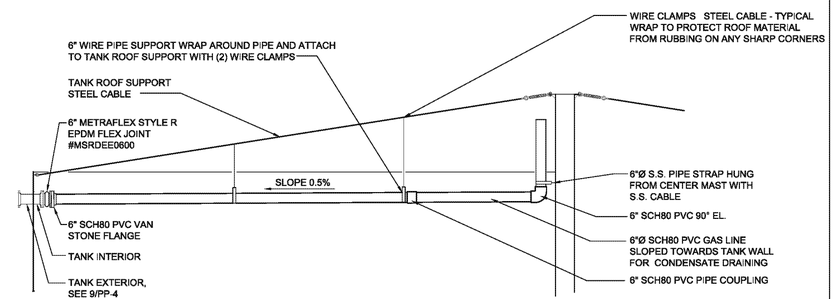

4 TANK INTERIOR GAS PIPING(TYP.)
SCALE: 1/4"=1'-0"

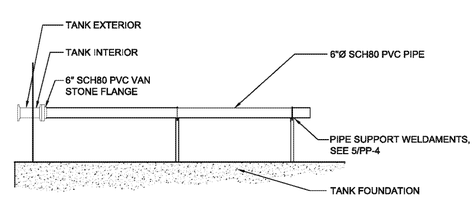

1 TANK INTERIOR PRESSURE LINE SLUDGE PIPING (TYP.)
SCALE: 1/4"=1'-0"

quasar energy group
7624 Riverview Road
PO Box 31023
Cleveland OH 44141
Phone: 216.986.9999

Scale: SEE DETAIL

This drawing contains valuable confidential and proprietary information that belongs to quasar energy group, llc ("quasar"), and is subject to a separate Confidentiality and Nondisclosure Agreement. quasar is the author and owner of this drawing, and retains all common law, statutory and other rights and privileges with respect hereto, including copyrights. The information contained herein may not at any time be used for any unauthorized purpose, nor reproduced by or provided to any third party, without the prior written consent of quasar.

STATE OF OHIO
ALAN R. JOHNSON
46333
REGISTERED
PROFESSIONAL ENGINEER

AS BUILT

Rev.	ECN Number	Date
2		
1		
0	AS BUILT	__/__/__

Drawing Name:
PROCESS PIPING DETAILS

Project Name and Address:
0058-CAR-OH-11

RINGLER FARMS
ADS Facility
ecoFarmsystem 980

2277 County Road 156
Cardington, OH 43315-9742

Area:
Author: RAMII
Calculated:
Checked: RN
Sheet Number: PP-4

P:\SBE Projects\0058-CAR-OH-11 - Ringler Farms\BUILDING DRAWINGS\CURRENT DRAWINGS (AS BUILT)\RINGLER FARMS PROCESS PIPING.dwg
11/15/2013 2:44 PM

© 2012, Quasar Energy Group, LLC. All rights reserved.

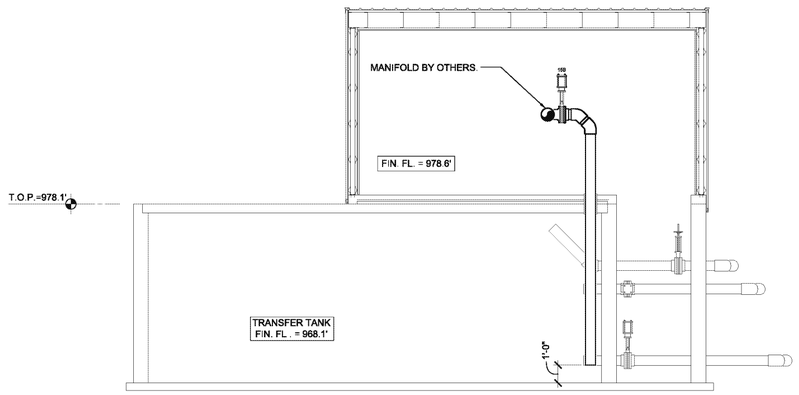

4 PROCESS PIPING SECTION
SCALE: 1/4"=1'-0"

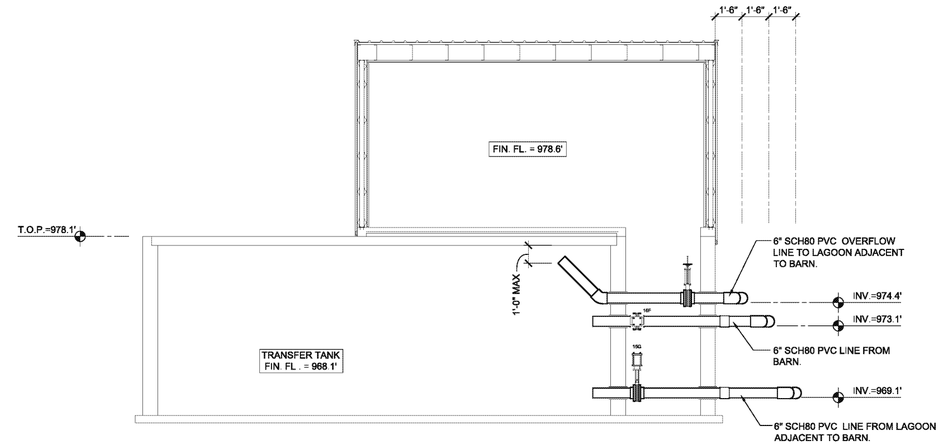

5 PROCESS PIPING SECTION
SCALE: 1/4"=1'-0"

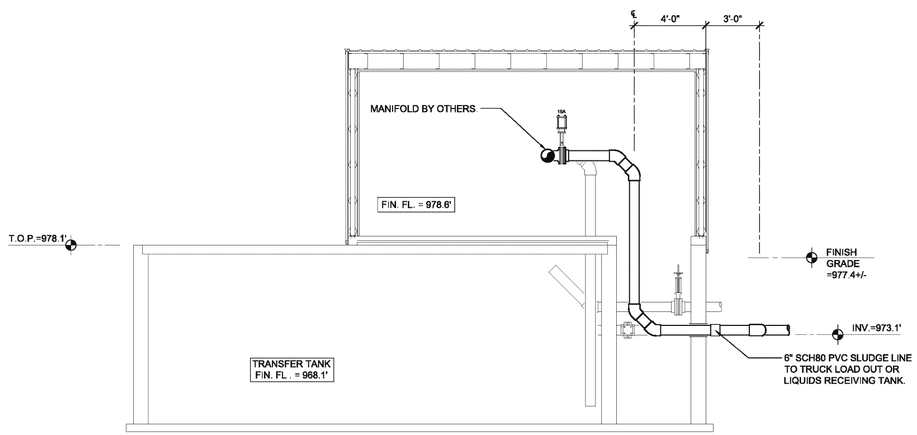

3 PROCESS PIPING SECTION
SCALE: 1/4"=1'-0"

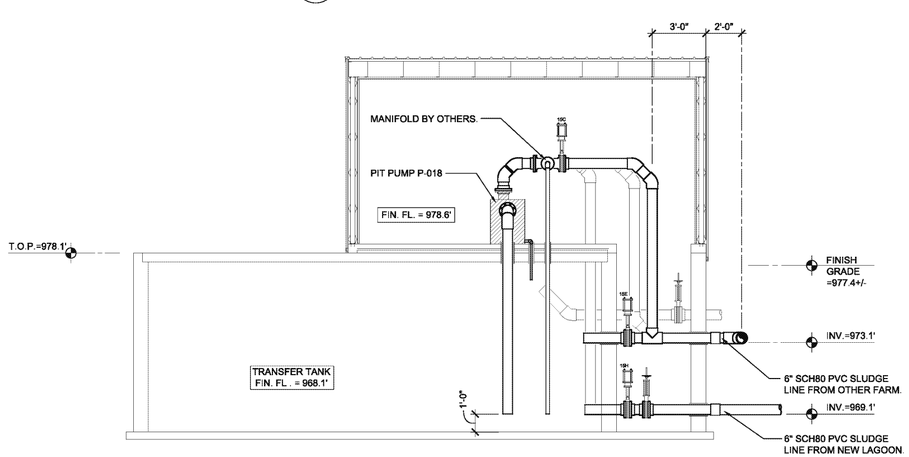

2 PROCESS PIPING SECTION
SCALE: 1/4"=1'-0"

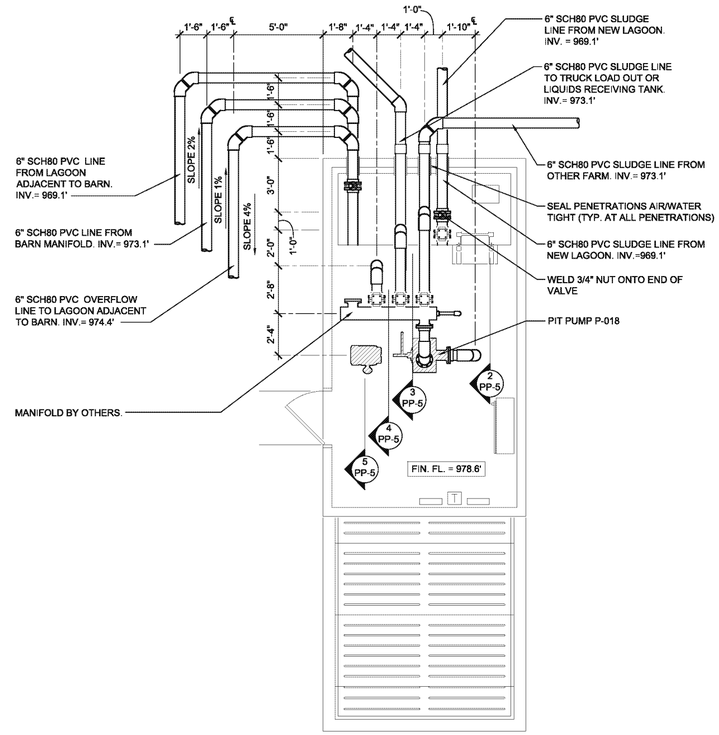

1 PROCESS PIPING PLAN
SCALE: 1/4"=1'-0"

quasar energy group
7624 Riverview Road
PO Box 31023
Cleveland OH 44141
Phone: 216.986.9999

Scale: SEE DETAIL

This drawing contains valuable confidential and proprietary information that belongs to quasar energy group, llc ("quasar"), and is subject to a separate Confidentiality and Nondisclosure Agreement. quasar is the author and owner of this drawing, and retains all common law, statutory and other rights and privileges with respect hereto, including copyrights. The information contained herein may not at any time be used for any unauthorized purpose, nor reproduced by or provided to any third party, without the prior written consent of quasar.

STATE OF OHIO
ALAN R. JOHNSON
46333
REGISTERED
PROFESSIONAL ENGINEER

AS BUILT

Rev.	ECN Number	Date
2		
1		
0	AS BUILT	__/__/__

Drawing Name:
TRANSFER TANK PROCESS PIPING DETAILS

Project Name and Address:
0058-CAR-OH-11

RINGLER FARMS
ADS Facility
ecoFarmsystem 980

2277 County Road 156
Cardington, OH 43315-9742

Area:
Author: RAMII
Calculated:
Checked: RN
Sheet Number: PP-5

P:\SBE Projects\0058-CAR-OH-11 - Ringler Farms\BUILDING DRAWINGS\CURRENT DRAWINGS (AS BUILT)\RINGLER FARMS PROCESS PIPING.dwg
11/15/2013 2:44 PM

© 2012, Quasar Energy Group, LLC. All rights reserved.

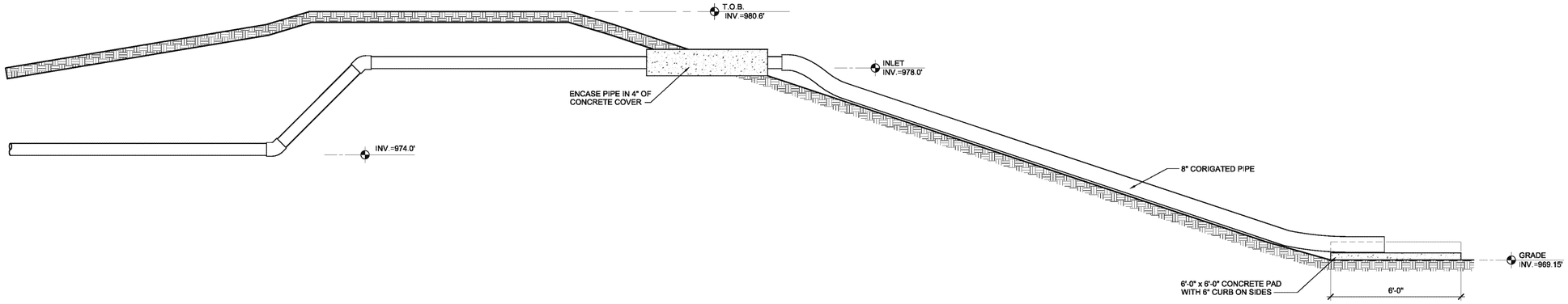

3 LAGOON ENTRANCE DETAIL
SCALE: 3/8"=1'-0"

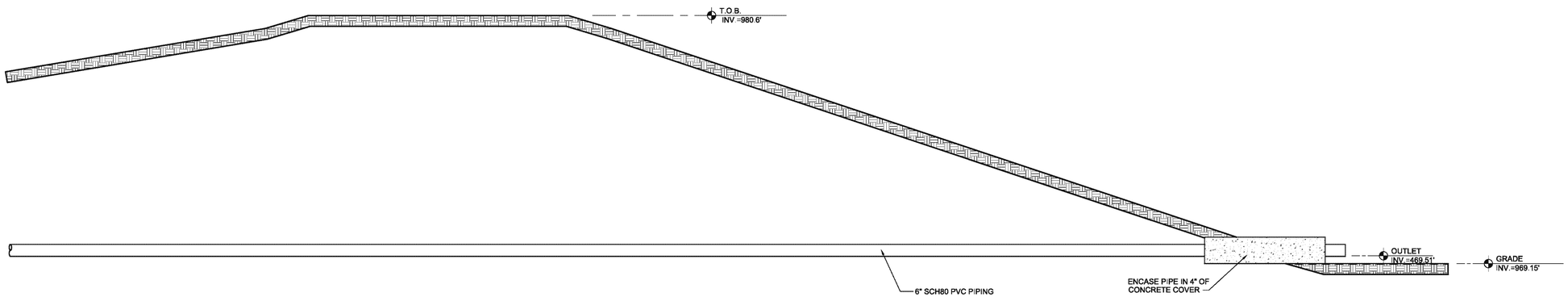

2 LAGOON ENTRANCE DETAIL
SCALE: 3/8"=1'-0"

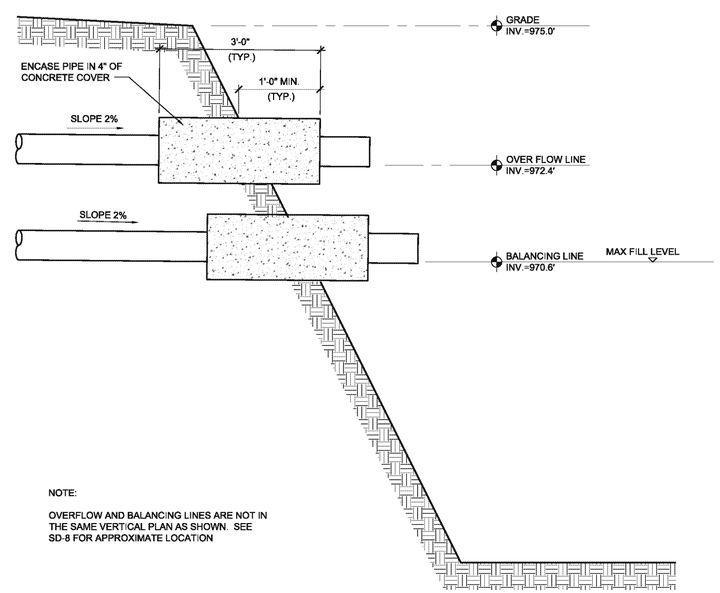

NOTE:

OVERFLOW AND BALANCING LINES ARE NOT IN THE SAME VERTICAL PLAN AS SHOWN. SEE SD-8 FOR APPROXIMATE LOCATION

1 LAGOON ENTRANCE DETAIL
SCALE: 3/4"=1'-0"

quasar energy group
7624 Riverview Road
PO Box 31023
Cleveland OH 44141
Phone: 216.986.9999

Scale: SEE DETAIL

This drawing contains valuable confidential and proprietary information that belongs to quasar energy group, llc ("quasar"), and is subject to a separate Confidentiality and Nondisclosure Agreement. quasar is the author and owner of this drawing, and retains all common law, statutory and other rights and privileges with respect hereto, including copyrights. The information contained herein may not at any time be used for any unauthorized purpose, nor reproduced by or provided to any third party, without the prior written consent of quasar.

STATE OF OHIO
ALAN R. JOHNSON
46333
REGISTERED
PROFESSIONAL ENGINEER

AS BUILT

Rev.	ECN Number	Date
2		
1		
0	AS BUILT	__/__/__

Drawing Name:
LAGOON ENTRANCE DETAILS

Project Name and Address:
0058-CAR-OH-11

RINGLER FARMS
ADS Facility
ecoFarmsystem 980

2277 County Road 156
Cardington, OH 43315-9742

Area:

Author: RAMII

Calculated:

Checked: RN

Sheet Number: PP-6

© 2012, Quasar Energy Group, LLC. All rights reserved.

P:\SBE Projects\0058-CAR-OH-11 - Ringler Farms\BUILDING DRAWINGS\CURRENT DRAWINGS (AS BUILT)\RINGLER FARMS PROCESS PIPING.dwg
11/15/2013 2:43 PM

480/277V, 3Ø, 4W, MFS — MAIN SWITCHBOARD 'MSB' SCHEDULE — LOCATION: OUTSIDE

DESCRIPTION	WATTS	WATTS	DESCRIPTION
CHP UNIT	-	243819	DISTRIBUTION PANEL 'DP-1'
400A., SPACE	-	167000	TRANSFORMER T-3
600A., SPACE	-		
TOTAL	-	410819	TOTAL

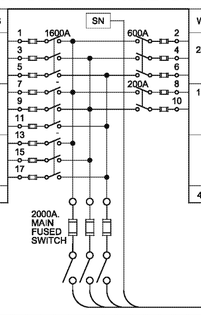

TOTAL CONNECTED LOAD
= 410,819 VA
= 495 AMPS AT 480V, 3Ø

600A, 277/480V, 3Ø, 4W — DISTRIBUTION PANELBOARD (DP-1) — LOCATION: ROOM 100

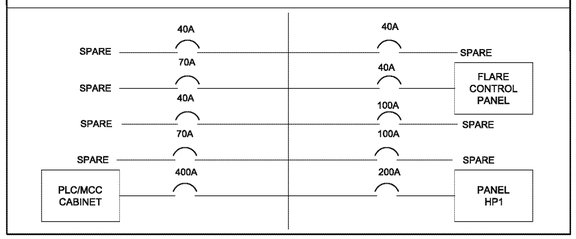

480/277V, 3Ø, 4W, MCB — DISTRIBUTION PANEL 'DP-3' SCHEDULE — LOCATION: EXIST. BUILDING

DESCRIPTION	WATTS	WATTS	DESCRIPTION
TRANSFORMER T-3	167000	16785	EXISTING BOILER PANEL
EXISTING AIR COMPRESSOR	22380	-	SPARE
FUTURE AIR COMPRESSOR	-	-	SPARE
TOTAL	189380	16785	TOTAL

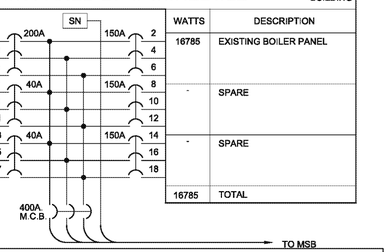

TOTAL CONNECTED LOAD
= 206165 VA
= 247 AMPS AT 480V, 3Ø

480V, 3Ø, 3W, MCB — PLC/MCC SCHEDULE — LOCATION: ROOM 100

DESCRIPTION	WATTS	WATTS	DESCRIPTION
SIDE ENTRY MIXER, M-001	14920	14920	SIDE ENTRY MIXER, M-002
SIDE ENTRY MIXER, M-003	14920	14920	SIDE ENTRY MIXER, M-004
SIDE ENTRY MIXER, M-005	14920	560	DOUBLE ROOF BLOWER, M-017
GRINDER, M-014	5595	373	DESULFURIZATION BLOWER M-018
RECIRCULATION PUMP, M-009	11190	1119	HOT WATER HEAT MANIFOLD PUMP, M-027
CONVEYOR #1, M-010	3730	560	HOT WATER HEAT EXCHANGER PUMP, M-028
CONVEYOR #2, M-011	3730	11190	GRINDER, M-012
OPEN HOPPER PUMP, M-013	29840	11190	HEATING/DOSING PUMP, M-015
LAGOON PUMP, M-019	7460	22330	HUSKY PUMP, M-016
TOTAL	106305	77162	TOTAL

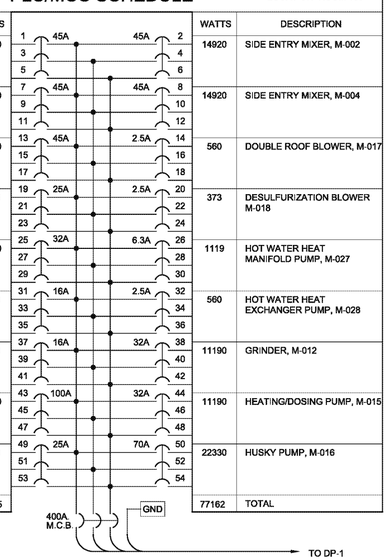

TOTAL CONNECTED LOAD
= 183,467 VA
= 221 AMPS AT 480V, 3Ø

480/277V, 3Ø, 4W, MLO — PANEL 'HP1' SCHEDULE — LOCATION: ROOM 100

DESCRIPTION	WATTS	WATTS	DESCRIPTION
SITE LIGHTING	2760	37500	TRANSFORMER T2
SITE LIGHTING	2300	6000	HEAT TRACING CKT
SITE LIGHTING	500	--	SPARE
EXTERIOR BUILDING LIGHTS	212	--	SPARE
PLANT LIGHTING	1230	--	SPARE
OFFICE LIGHTING	660	--	SPARE
SOLIDS PIT LIGHTING	900	--	SPARE
LIGHTING CONTROL	600	--	SPARE
SPARE	--	--	SPARE
SPARE	--	--	SPARE
SPARE	--	--	SPARE
SPARE	--	--	SPARE
SPARE	--	--	SPARE
SPARE	--	--	SPARE
SPARE	--	--	SPARE
SPARE	--	--	SPARE
SPARE	--	--	SPARE
SPARE	--	--	SPARE
H2S SKID	--	--	SPARE
TOTAL	9162	43500	TOTAL

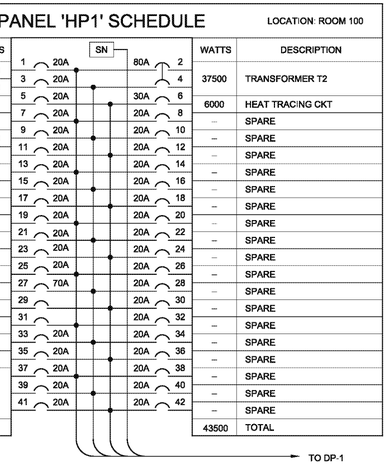

TOTAL CONNECTED LOAD
= 52,662 VA
= 64 AMPS AT 480V, 3Ø

120/240V, 1Ø, 3W — PANEL 'CP1' SCHEDULE — LOCATION: ROOM 100

DESCRIPTION	WATTS	WATTS	DESCRIPTION
RECEPTACLES GFCI - BAR	540	180	RECEPTACLES
RECEPTACLES	900	--	SPARE
RECEPTACLES	720	540	RECEPTACLES
RECEPTACLES GFCI - BAR	360	360	SOLIDS PIT RECEPTACLES
SOLIDS PIT RECEPTACLES	360	--	GLYCOL PUMP
PTAC UNIT	4830	735	EF-1
		48	EF-2
CONDENSATE TRAP PUMP	373	560	EF-3
SOLIDS PIT SUMP PUMP	373	746	EF-4
SNOW MELT PUMP P-007	125	2238	AIR COMPRESSOR
BUILDING HEAT PUMP P-008	310	--	RECEPTACLES
PIT HEAT PUMP P-012	110	--	RECEPTACLES
REFRIGERATOR GFCI	--	--	SPARE
SPARE	--	--	MICROWAVE / FAN - GFCI
SPARE	--	--	DEWATERING PUMP
WELDER	--	2000	ELECTRIC WATER HEATER
OUTLET	--	--	SPARE
FEED STOCK DOG HOUSE GFCI	--	--	DIGESTER DOG HOUSE GFCI
HYD PIT COVER MOTOR	3910	--	WELL PUMP
TOTAL	12911	8667	TOTAL

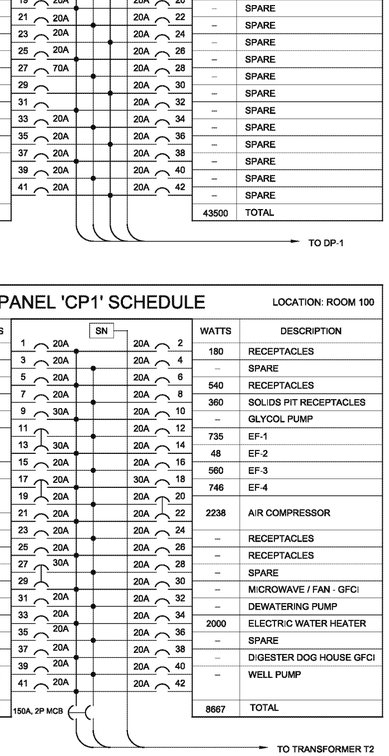

TOTAL CONNECTED LOAD
= 21578 VA
= 90 AMPS AT 240V, 1Ø

ELECTRICAL ABBREVIATIONS

A	AMPERE	NC	NORMALLY CLOSED
AC	ALTERNATING CURRENT	NO	NORMALLY OPEN
AFF	ABOVE FINISHED FLOOR	OL	OVERLOAD
AFG	ABOVE FINISHED GRADE	P	POLE
C	CONDUIT	PB	PULL BOX OR PUSH BUTTON
CB	CIRCUIT BREAKER	PLC	PROGRAMMABLE LOGIC CONTROLLER
CKT	CIRCUIT	PNL	PANEL OR PANELBOARD
CP	CONTROL PANEL	PT	POTENTIAL TRANSFORMER
CR	CONTROL RELAY	RCVR	RECEIVER
CT	CURRENT TRANSFORMER	REC	RECEPTACLE
DC	DIRECT CURRENT	SEC	SECOND
EL	ELEVATION	STP	SHIELDED TWISTED PAIR CABLE
ETM	ELAPSED TIME METER	STT	SHIELDED TWISTED TRIPLET CABLE
EPC	EMERGENCY PULL CORD	SWBD	SWITCHBOARD
FO	FIBER OPTIC	TR	TIME DELAY RELAY
GFI	GROUND FAULT INTERRUPTER	TYP	TYPICAL
GRD	GROUND	US	UNDERSPEED SWITCH
HH	HANDHOLE	UTP	UNSHIELDED TWISTED PAIR CALBE
HOA	HAND-OFF-AUTOMATIC	V	VOLT
HP	HORSEPOWER	VFD	VARIABLE FREQUENCY DRIVE
KCM	THOUSAND CIRCULAR MILLS	W	WATT / WIRE
KVA	KILOVOLT AMPERE	WH	WATTHOUR
KW	KILOWATT	WP	WEATHERPROOF
LTG	LIGHTING OR LIGHT	XFMR	TRANSFORMER
LOS	LOCK OUT STOP	XFR	TRANSFER
MCC	MOTOR CONTROL CENTER	XMTR	TRANSMITTER
MH	MANHOLE	XP	EXPLOSION PROOF
MSB	MAIN SWITCHBOARD	Ø	PHASE

SYMBOL LEGEND (Electrical)

SYMBOL	DESCRIPTION
$	LIGHT SWITCH - SINGLE POLE, 120V, 15AMP
$3	LIGHT SWITCH - 3-WAY, 120V, 15AMP
	DUPLEX RECEPTACLE, GROUNDING TYPE, 20 AMP, 125V, LOCATE 18" A.F.F UNLESS OTHERWISE NOTED
GFCI	DUPLEX RECEPTACLE, GROUND FAULT CIRCUT INTERRUPTER, 15AMP
WP	DUPLEX RECEPTICALE, GROUND FAULT CIRCUT INTERUPTER IN WATER PROOF BOX
	NEMA6-30R RECEPTACLE, 30AMP, 240V
	TELEPHONE OUTLET, LOCATE 18" A.F.F., RUN 3/4" CONDUIT TO CEILING SPACE ABOVE
	DATA OUTLET, LOCATE 18" A.F.F., RUN 3/4" CONDUIT TO CEILING SPACE ABOVE
	MOTOR, SINGLE PHASE
	DISCONNECT
3R	NEMA-3R DISCONNECT
M	METER
	UTILITY POLE
	PANEL
	GROUND ROD (PLAN VIEW)
	STB
	FUSE
	FUSED SWITCH
	CIRCUIT BREAKER
	EARTH GROUND
	TRANSFORMER

ELECTRICAL NOTES:

1. ALL NEW WIRING SHALL CONFORM TO THE CURRENT EDITIONS OF THE NATIONAL ELECTRIC CODE AND THE OHIO BASIC BUILDING CODE. CERTIFICATE OF INSPECTION SHALL BE OBTAINED BY CONTRACTOR AT HIS EXPENSE FOR THE ENTIRE WORK.
2. DRAWINGS ARE INTENDED TO INDICATE FUNCTIONS REQUIRED WITHIN CONSTRUCTION PROJECT AND APPROXIMATE LOCATION OF EQUIPMENT AND DEVICES. ELECTRICAL CONTRACTOR SHALL COORDINATE HIS WORK WITH THAT OF OTHER TRADES PRIOR TO INSTALLATION OF ANY CONDUIT, WIRE, PANELS, DISCONNECTS & ETC.
3. CONDUIT RUNS AS SHOWN ARE INTENDED TO BE TYPICAL AND MAY BE REROUTED BY CONTRACTOR AS FIELD CONDITIONS PERMIT, PROVIDED THE INTENDED PURPOSE OF CONDUIT AND ASSOCIATED WIRING SHALL BE RETAINED.
4. ALL UNDERGROUNG ELECTRICAL LINES SHALL BE MARKED WITH DETECTABLE MARKING TAPE THAT READS "CAUTION: BURIED ELECTRIC LINE BELOW".
5. ALL CONDUIT EXPOSED TO WEATHER, USED IN DAMP LOCATIONS, CONCEALED IN FLOOR SLABS OR OUTSIDE WALLS SHALL BE RIGID GALVANIZED CONDUIT. ALL BRANCHES, FEEDER RUNS, CONDUIT FOR MISCELLANEOUS SERVICES, ETC., EXCEPT WHERE IT FALLS WITHIN A CATEGORY DESCRIBED ABOVE, MAY BE EMT (THIN WALL) CONDUIT. CONDUIT SHALL BE CONCEALED IN ALL PARTS OF THE BUILDING WHERE SO INDICATED AND WHERE PRACTICAL. AT ELECTRICAL CONTRACTORS OPTION CONDUITS LOCATED WITHIN SOLIDS RECEIVING PIT MAY BE SCHEDULE 40 PVC ELECTRICAL CONDUIT.
6. ALL BRANCH CIRCUITS FOR LIGHTING HOME RUNS, SWITCH LEGS, ETC., SHALL BE MINIMUM SIZE NO. 12 AWG WITH MINIMUM 20 AMP CIRCUIT BREAKER. ALL MAIN FEEDERS TO PANELS, TRANSFORMERS, ETC. SHALL BE SIZED IN ACCORDANCE WITH LOAD REQUIREMENTS AND AS INDICATED ON DRAWINGS, BUT NO WIRE OR CABLE SHALL BE LESS THAN NO. 12 AWG.
7. CONTRACTOR SHALL PROVIDE CONVIENCE OUTLETS AS SHOWN ON THE DRAWINGS AND ANY ADDITIONAL REQUIRED BY OWNER IF NOT EXISTING IN COMPLIANCE WITH THE N.E.C.
8. UNLESS OTHERWISE INDICATED, ALL MOUNTING ELEVATIONS ARE CENTERLINE ELEVATIONS.
9. THE CONTRACTOR SHALL NOT CONSOLIDATE INDIVIDUAL BRANCH CIRCUIT CONDUIT HOME RUNS EXCEPT AS FOLLOWS:
   a. WHEN SHOWN ON THE DRAWINGS
   b. WITH PRIOR WRITTEN APPROVAL BY THE ENGINEER
   c. 20 AMP MULTIWIRE BRANCH CIRCUITS WITH A MAXIMUM OF THREE PHASE CONDUCTORS
10. NEUTRAL CONDUCTORS SHALL BE CONSIDERED CURRENT CARRING FOR THE PURPOSES OF DERATING.
11. ALL CONDUITS SHALL INCLUDE A GROUND WIRE.
12. ALL SPARE CONDUITS SHALL BE CAPPED AT EACH END AND INCLUDE A PULL STRING.
13. PROVIDE AND SIZE ALL SLEEVES, HOLES, CORES, ANCHORS, BRACKETS, SUPPORTS, BOXES, AND OTHER APPURTENANCES NECESSARY TO EXECUTE THE CONTRACT DOCUMENTS COMPLETE. SOME OF THESE ITEMS MAY BE SHOWN ON THE DRAWINGS FOR CLARITY OR DESIGN PREFERENCE, HOWEVER, NOT ALL OF THE ITEMS NECESSARY FOR COMPLETE EXECUTION AND INSTALLATION ARE SHOWN.
14. PROVIDE A 4" THICK CONCRETE PAD UNDER ALL FLOOR MOUNTED ELECTRICAL DISTRIBUTION EQUIPMENT AND CONTROL PANELS. ELECTRICAL CONTRACTOR SHALL BE RESPONSIBLE FOR ALL PAD SIZES AND LAYOUT OF PADS.
15. ALL WIRES & CABLES SHALL BE LABELED AT EACH END WITH A NUMBER REFERRING TO THE SHEET AND LINE NUMBER IN WHICH IT APPEARS IN THE ELECTRICAL SCHEMATICS.
16. ALL CONNECTIONS MADE TO ELECTRICAL ENCLOSURES SHALL MAINTAIN THE NEMA RATING OF THE ENCLOSURE.
17. VARIABLE FREQUENCY DRIVES SHALL USE SHIELDED CABLE TO THE MOTOR.
18. ANALOG SENSORS SHALL USE SHIELDED TWISTED-PAIR CABLE.
19. MOTOR CABLES SHALL NOT RUN IN THE SAME CONDUIT AS SENSOR AND CONTROL CABLES.
20. MOTOR CABLES AND SENSOR/CONTROL CABLES SHALL NOT RUN PARALLEL TO EACH OTHER IN CLOSE PROXIMITY. THEY MAY CROSS EACH OTHER AT 180 DEGREE ANGLES.
21. MOTORS WILL BE CONTROLLED BY THE FOLLOWING DEVICES:
    - VARIABLE FREQUENCY DRIVES (PUMP MOTORS)
    - MOTOR STARTERS (GRINDER MOTORS)
    - SOFT STARTERS (MIXER MOTORS)
    VARIABLE FREQUENCY DRIVES WILL BE CONTROLLED SOLELY OVER ETHERNET BY THE PLC.
22. EMERGENCY STOP PUSHBUTTONS WILL:
    - HAVE A LED LAMP TO SIGNAL BUTTON IS PRESSED.
    - USE TWO CHANNELS.
    - USE NORMALLY-CLOSED LATE-BREAK CONTACTS (N.C.L.B.) FOR THE SAFETY CHANNELS.
    - USE SELF MONITORING CONTACT BLOCK TO DETECT SEPARATION OF THE CONTACT BLOCK FROM THE BUTTON.
    - OPERATE ON 24 VDC.
23. THE C.H.P. CONTAINER (COMBINED HEAT & POWER) HOUSES THE GENERATOR. THE FOLLOWING CABLE SHALL BE USED BETWEEN THE MAIN PLC CABINET AND THE CHP:
    - BELDEN 1050A OR EQUIVALENT, 8 SHIELDED PAIRS, 18 AWG
24. THE FLARE IS A STAND-ALONE UNIT RESPONSIBLE FOR BURNING OFF EXCESS GASES. THE FOLLOWING CABLE SHALL BE USED BETWEEN THE MAIN PLC CABINET AND THE FLARE:
    - BELDEN 27341A OR EQUIVALENT, 12 CONDUCTORS, 16 AWG
25. ALL CONTROL WIRING 14AWG AND SMALLER SHALL HAVE FERRELS CRIMPED ONTO THE END OF THE WIRES PRIOR TO CONNECTION TO TERMINAL BLOCKS, SENSORS, & ETC.
26. THE TABLE BELOW LISTS THE BELDEN CABLE PART NUMBER OR EQUIVALENT THAT SHALL BE USED PER DEVICE.

DEVICE TYPE	PART NUMBER	COLOR CODE	OUTSIDE DIAMETER (IN.)	WIRE GAUGE (AWG.)
PRESSURE SWITCH	27326A	BLK, RED, BLU, ORG	0.308	4 x 18
ANALOG TRANSMITTER	1120A	RED, BLK, SHLD	0.278	2 x 18
E-STOP PUSHBUTTON	27327A	BLK, RED, BLU, ORG, YLW, BRN, RED/BLK	0.35	7 x 18
0-7.5 H.P. VFD	29501	BLK #1, BLK #2, BLK #3, GRN/YLW	0.6	4 x 14
10 H.P. VFD	29502	BLK #1, BLK #2, BLK #3, GRN/YLW	0.63	4 x 12
15 H.P. VFD	29503	BLK #1, BLK #2, BLK #3, GRN/YLW	0.69	4 x 10
20 H.P. VFD	29504	BLK #1, BLK #2, BLK #3, GRN/YLW	0.93	4 x 8
25-30 H.P. VFD	29505	BLK #1, BLK #2, BLK #3, GRN/YLW	1.02	4 x 6
40 H.P. VFD	29506	BLK #1, BLK #2, BLK #3, GRN/YLW	1.16	4 x 4
50 H.P. VFD	29507	BLK #1, BLK #2, BLK #3, GRN/YLW	1.31	4 x 3
AC MOTOR	N/A			14+

27. ETHERNET CABLES SHALL BE CATEGORY 5E OR HIGHER. THEY SHALL BE TERMINATED TO T568A SPECIFICATIONS:

PIN	PAIR	COLOR
1	3	WHT/GRN
2	3	GRN
3	2	WHT/ORG
4	1	BLU
5	1	WHT/BLU
6	2	ORG
7	4	WHT/BRN
8	4	BRN

quasar energy group
7624 Riverview Road
PO Box 31023
Cleveland OH 44141
Phone: 216.986.9999

Scale: NONE

This drawing contains valuable confidential and proprietary information that belongs to quasar energy group, llc ("quasar"), and is subject to a separate Confidentiality and Nondisclosure Agreement. quasar is the author and owner of this drawing, and retains all common law, statutory and other rights and privileges with respect hereto, including copyrights. The information contained herein may not at any time be used for any unauthorized purpose, nor reproduced by or provided to any third party, without the prior written consent of quasar.

AS BUILT

Rev.	ECN Number	Date
2		
1		
0	AS BUILT	__/__/__

Drawing Name:
LEGENDS, NOTES AND PANEL SCHEDULES

Project Name and Address:
0058-CAR-OH-11

RINGLER FARMS
ADS Facility
ecoFarmsystem 980

2277 County Road 156
Cardington, OH 43315-9742

Area:
Author: RAMII
Calculated:
Checked: RN
Sheet Number: E-1

P:\SBE Projects\0058-CAR-OH-11 - Ringler Farms\BUILDING DRAWINGS\CURRENT DRAWINGS (AS BUILT)\RINGLER FARMS ELECTRICAL.dwg
11/15/2013 3:16 PM

© 2012, Quasar Energy Group, LLC. All rights reserved.

RELAY ELEMENT LEGEND		RELAY SETTINGS FOR PR1
25	SYNC CHECK	SYNC DWELL PHASE ANGLE < 10° / VOLT MATCH ±10 % / TIME 30 CYCLES
27	UNDER VOLTAGE	90 % OF NOMINAL-TRIP TIME 60 CYCLES 50 % OF NOMINAL-TRIP TIME 6 CYCLES
32	DIRECTIONAL ELEMENT	PICKUP #1 -0.03 REVERSE O.P. (16 KW REVERSE) DELAY 600 CYC.
40	LOSS OF FIELD	CD #1 - 1, OFFSET - 0.08, DELAY 10 CYCLES. / CD #2 - 1.81, OFFSET - 0.08, DELAY 60 CYCLES
46	NEGATIVE SEQUENCE OVER CURRENT ELEMENT	PICKUP: 20 % / (I Square) * t=k/ TIME DIAL 10 / MAX TIME - 10000 CYCLES.
47	NEGATIVE SEQUENCE OVER VOLTAGE ELEMENT	PICKUP: 25.0 % TIME DELAY: 60 CYCLES
51N	INVERSE TIME RESIDUAL OVERCURRENT	PICKUP - 2.96A / CURVE - IEC1 / TIME DIAL - 0.5
51V	TIME OVER CURRENT VOLTAGE RESTRAINED	PICKUP - 6.35A / CURVE - IEC1 / TIME DIAL - 0.75 / VOLTAGE RESTRAINT
59	OVER VOLTAGE	PU - 110 % OF NOMINAL / TRIP TIME 60 CYCLES / PU2 - 120 % OF NOMINAL / TRIP TIME 6 CYCLES
81 O/U	FREQUENCY	U - 59.5 / TRIP TIME 10 CYCLES / O - 60.5 / TRIP TIME 10 CYCLES

* RELAY SETTINGS WILL BE REVISED PER GENERATOR SIZE AND COORDINATION WITH POWER CO. PROTECTIVE DEVICES.

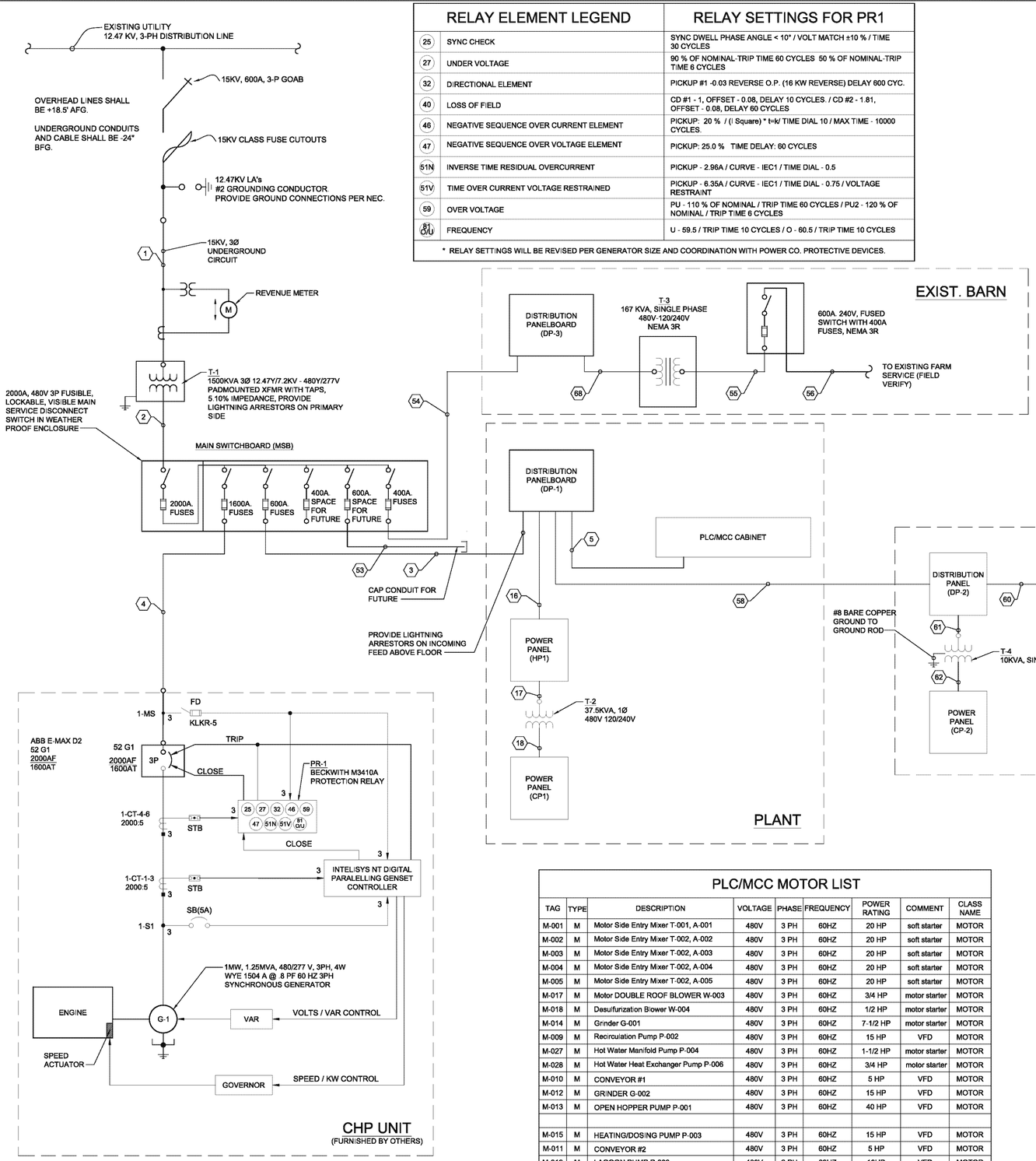

1 ONE-LINE DIAGRAM
SCALE: NONE

PLC/MCC MOTOR LIST								
TAG	TYPE	DESCRIPTION	VOLTAGE	PHASE	FREQUENCY	POWER RATING	COMMENT	CLASS NAME
M-001	M	Motor Side Entry Mixer T-001, A-001	480V	3 PH	60HZ	20 HP	soft starter	MOTOR
M-002	M	Motor Side Entry Mixer T-002, A-002	480V	3 PH	60HZ	20 HP	soft starter	MOTOR
M-003	M	Motor Side Entry Mixer T-002, A-003	480V	3 PH	60HZ	20 HP	soft starter	MOTOR
M-004	M	Motor Side Entry Mixer T-002, A-004	480V	3 PH	60HZ	20 HP	soft starter	MOTOR
M-005	M	Motor Side Entry Mixer T-002, A-005	480V	3 PH	60HZ	20 HP	soft starter	MOTOR
M-017	M	Motor DOUBLE ROOF BLOWER W-003	480V	3 PH	60HZ	3/4 HP	motor starter	MOTOR
M-018	M	Desulfurization Blower W-004	480V	3 PH	60HZ	1/2 HP	motor starter	MOTOR
M-014	M	Grinder G-001	480V	3 PH	60HZ	7-1/2 HP	motor starter	MOTOR
M-009	M	Recirculation Pump P-002	480V	3 PH	60HZ	15 HP	VFD	MOTOR
M-027	M	Hot Water Manifold Pump P-004	480V	3 PH	60HZ	1-1/2 HP	motor starter	MOTOR
M-028	M	Hot Water Heat Exchanger Pump P-006	480V	3 PH	60HZ	3/4 HP	motor starter	MOTOR
M-010	M	CONVEYOR #1	480V	3 PH	60HZ	5 HP	VFD	MOTOR
M-012	M	GRINDER G-002	480V	3 PH	60HZ	15 HP	VFD	MOTOR
M-013	M	OPEN HOPPER PUMP P-001	480V	3 PH	60HZ	40 HP	VFD	MOTOR
M-015	M	HEATING/DOSING PUMP P-003	480V	3 PH	60HZ	15 HP	VFD	MOTOR
M-011	M	CONVEYOR #2	480V	3 PH	60HZ	5 HP	VFD	MOTOR
M-019	M	LAGOON PUMP P-009	480V	3 PH	60HZ	10HP	VFD	MOTOR
M-016	M	HUSKY PUMP P-013	480V	3 PH	60HZ	30HP	motor starter	MOTOR

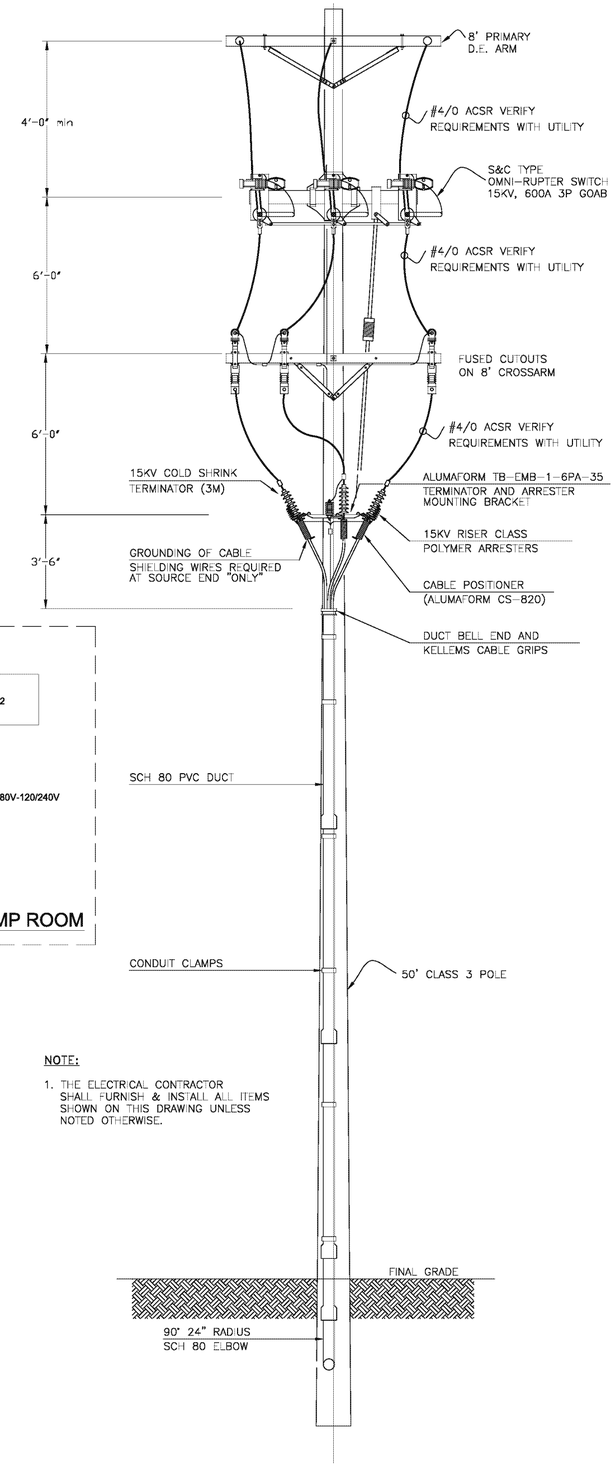

NOTE:

1. THE ELECTRICAL CONTRACTOR SHALL FURNISH & INSTALL ALL ITEMS SHOWN ON THIS DRAWING UNLESS NOTED OTHERWISE.

2 RISER POLE DETAIL
SCALE: NONE

quasar energy group
7624 Riverview Road
PO Box 31023
Cleveland OH 44141
Phone: 216.986.9999

Scale: NONE

This drawing contains valuable confidential and proprietary information that belongs to quasar energy group, llc ("quasar"), and is subject to a separate Confidentiality and Nondisclosure Agreement. quasar is the author and owner of this drawing, and retains all common law, statutory and other rights and privileges with respect hereto, including copyrights. The information contained herein may not at any time be used for any unauthorized purpose, nor reproduced by or provided to any third party, without the prior written consent of quasar.

AS BUILT

Rev.	ECN Number	Date
2		
1		
0	AS BUILT	__/__/__

Drawing Name:
ONE-LINE DIAGRAM

Project Name and Address:
0058-CAR-OH-11

RINGLER FARMS
ADS Facility
ecoFarmsystem 980

2277 County Road 156
Cardington, OH 43315-9742

Area:
Author: —
Calculated:
Checked: RN
Sheet Number: E-2

© 2012, Quasar Energy Group, LLC. All rights reserved.

P:\SBE Projects\0058-CAR-OH-11 - Ringler Farms\BUILDING DRAWINGS\CURRENT DRAWINGS (AS BUILT)\RINGLER FARMS ELECTRICAL.dwg
11/15/2013 3:16 PM

GROUNDING GENERAL NOTES

1. REFER TO DRAWING E-4 FOR GROUNDING DETAILS.
2. ALL GROUND RODS AND GROUND CONDUCTORS ARE SHOWN DIAGRAMMATICALLY. EXACT LOCATIONS ARE TO BE DETERMINED IN THE FIELD.
3. GROUND RODS SHALL BE 3/4"Ø x 10'-0" LONG COPPER CLAD ROD WITH #3/0 BARE COPPER GROUNDING CONDUCTOR. PROVIDE EXOTHERMIC CONNECTION BETWEEN WIRE AND GROUND ROD. PROVIDE BOLTED CONNECTION TO TANK. NO EXOTHERMIC WELDING ALLOWED ON TANK.
4. GROUNDING TO BE SUFFICIENT TO PROVIDE AN EFFECTIVE GROUND PATH BETWEEN THE EQUIPMENT AND GROUND OF NOT MORE THAN 5 OHMS, FOR STRUCTURAL STEEL SIDING OF BUILDINGS. IF THE RESISTANCE TO GROUND IS GREATER THAN 5 OHMS GROUND RODS SHALL BE ADDED UNTIL A COMBINED RESISTANCE OF LESS THAN 5 OHMS IS OBTAINED.
5. GENERAL REQUIREMENTS FOR GROUNDING AND BONDING SYSTEM SHALL BE IN ACCORDANCE WITH THE NATIONAL ELECTRIC CODE (CURRENT EDITION).

NOTE:

THE GROUNDING CONDUCTOR IS NOT PERMITTED BETWEEN THE UTILITY TRANSFORMER AND THE SERVICE DISCONNECT AS PER NEC 250.6.

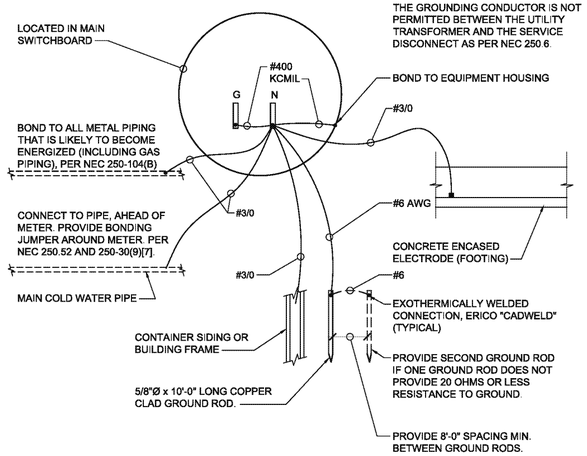

2 SERVICE GROUNDING DETAIL

SCALE: NONE

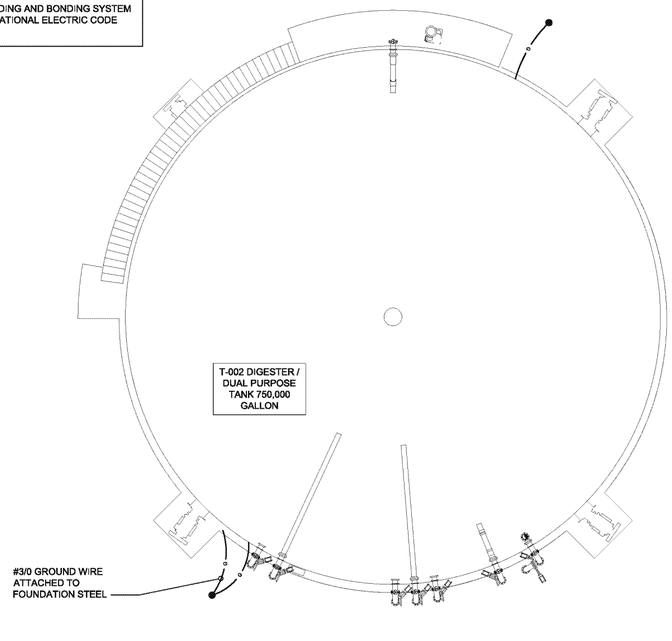

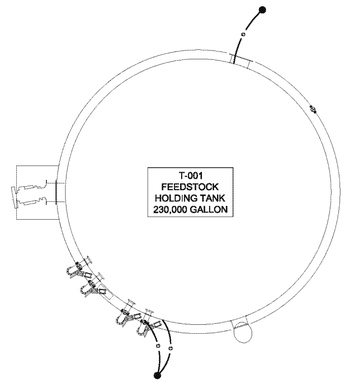

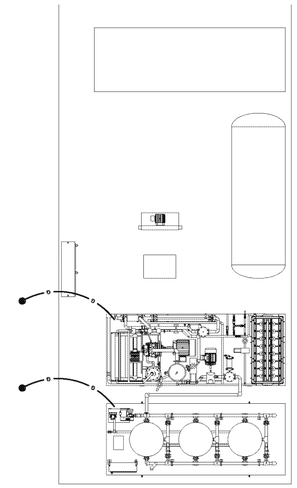

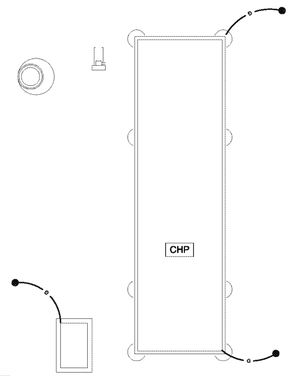

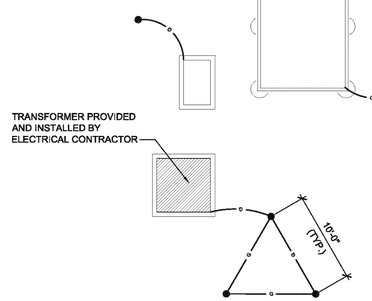

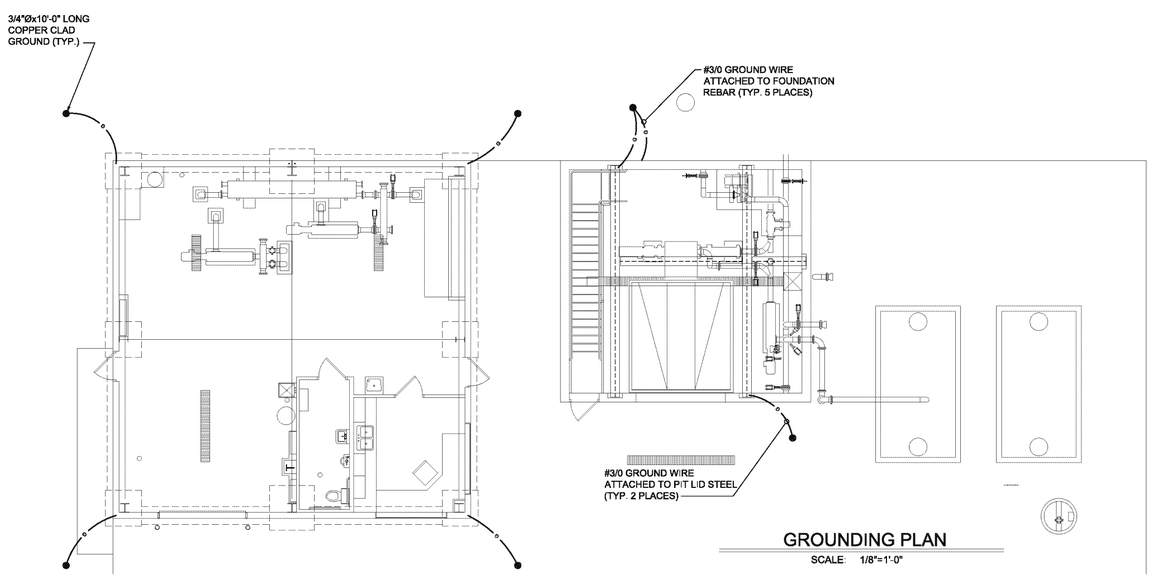

GROUNDING PLAN

SCALE: 1/8"=1'-0"

quasar energy group
7624 Riverview Road
PO Box 31023
Cleveland OH 44141
Phone: 216.986.9999

Scale: 1/8"=1'-0"

This drawing contains valuable confidential and proprietary information that belongs to quasar energy group, llc ("quasar"), and is subject to a separate Confidentiality and Nondisclosure Agreement. quasar is the author and owner of this drawing, and retains all common law, statutory and other rights and privileges with respect hereto, including copyrights. The information contained herein may not at any time be used for any unauthorized purpose, nor reproduced by or provided to any third party, without the prior written consent of quasar.

AS BUILT

Rev.	ECN Number	Date
2		
1		
0	AS BUILT	__/__/__

Drawing Name:
GROUNDING PLAN

Project Name and Address:
0058-CAR-OH-11

RINGLER FARMS
ADS Facility
ecoFarmsystem 980

2277 County Road 156
Cardington, OH 43315-9742

Area:

Author: RAMII

Calculated:

Checked: RN

Sheet Number: E-3

P:\SBE Projects\0058-CAR-OH-11 - Ringler Farms\BUILDING DRAWINGS\CURRENT DRAWINGS (AS BUILT)\RINGLER FARMS ELECTRICAL.dwg
11/15/2013 3:15 PM

© 2012, Quasar Energy Group, LLC. All rights reserved.

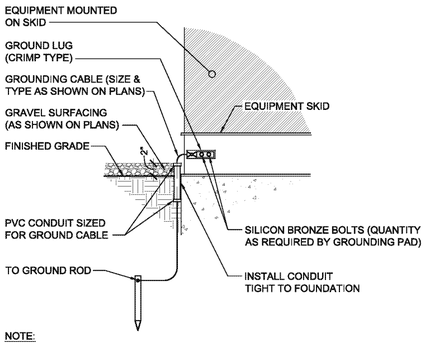

NOTE:

GROUND LUG SHALL BE SIZED ACCORDING TO MANUFACTURER'S SPECIFICATIONS FOR SIZE CABLE USED. LUG SHALL BE NEMA STANDARD, 2-HOLE OR 4-HOLE AS REQUIRED TO MATCH GROUND PAD ON EQUIPMENT.

8 TYPICAL GROUND CONNECTION TO EQUIPMENT SKID

SCALE: NONE

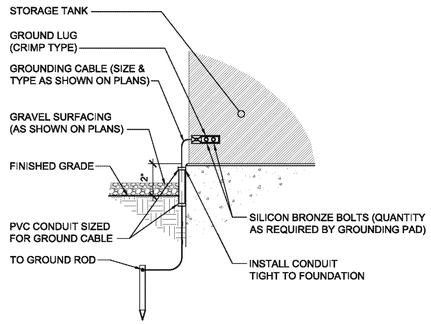

NOTE:

GROUND LUG SHALL BE SIZED ACCORDING TO MANUFACTURER'S SPECIFICATIONS FOR SIZE CABLE USED. LUG SHALL BE NEMA STANDARD, 2-HOLE OR 4-HOLE AS REQUIRED TO MATCH GROUND PAD ON EQUIPMENT.

7 TYPICAL GROUND CONNECTION TO STORAGE TANKS WITH GROUND PAD (BOLTED)

SCALE: NONE

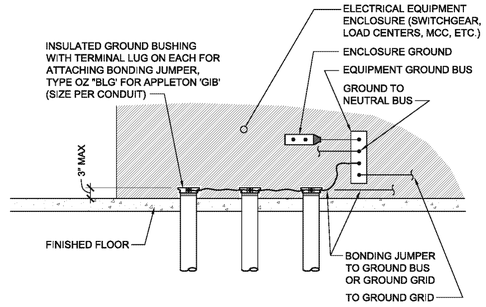

6 TYPICAL GROUND CONNECTION CONDUITS AT ELECTRICAL EQUIPMENT

SCALE: NONE

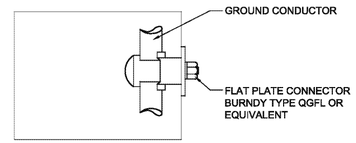

5 TYPICAL GROUND CONNECTION TO METAL ENCLOSURE

SCALE: NONE

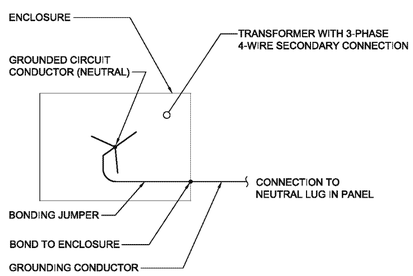

NOTE:
THIS CONNECTION APPLIES TO ALL GENERAL-PURPOSE TRANSFORMERS WITH AN IDENTIFIED GROUNDING CIRCUIT CONDUCTOR.

4 TYPICAL GROUND CONNECTION TO TRANSFORMER ENCLOSURE

SCALE: NONE

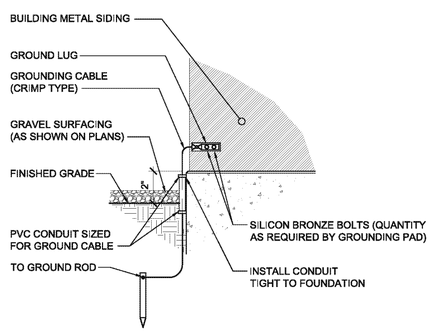

NOTE:

GROUND LUG SHALL BE SIZED ACCORDING TO MANUFACTURER'S SPECIFICATIONS FOR SIZE CABLE USED. LUG SHALL BE NEMA STANDARD, 2-HOLE OR 4-HOLE AS REQUIRED TO MATCH GROUND PAD ON EQUIPMENT.

3 TYPICAL GROUND CONNECTION TO BUILDING EXTERIOR METAL SIDING TO GROUND ROD

SCALE: NONE

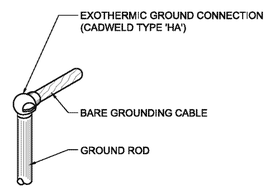

NOTE:

EXOTHERMIC GROUND CONNECTIONS SHALL BE SIZED ACCORDING TO THE MANUFACTURER'S SPECIFICATIONS FOR SIZE CABLE AND ROD USED AS SHOWN ON PLANS.

2 TYPICAL GROUND CABLE CONNECTION TO GROUND ROD

SCALE: NONE

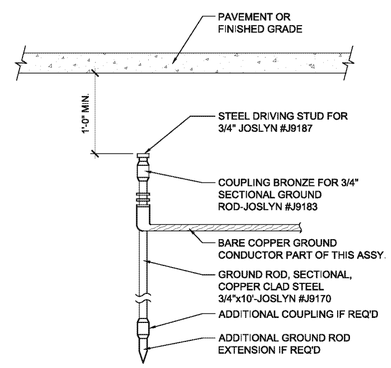

1 TYPICAL GROUND ROD

SCALE: NONE

quasar energy group
7624 Riverview Road
PO Box 31023
Cleveland OH 44141
Phone: 216.986.9999

Scale: SEE DETAILS

This drawing contains valuable confidential and proprietary information that belongs to quasar energy group, llc ("quasar"), and is subject to a separate Confidentiality and Nondisclosure Agreement. quasar is the author and owner of this drawing, and retains all common law, statutory and other rights and privileges with respect hereto, including copyrights. The information contained herein may not at any time be used for any unauthorized purpose, nor reproduced by or provided to any third party, without the prior written consent of quasar.

AS BUILT

Rev.	ECN Number	Date
2		
1		
0	AS BUILT	__/__/__

Drawing Name:
GROUNDING DETAILS

Project Name and Address:
0058-CAR-OH-11

RINGLER FARMS
ADS Facility
ecoFarmsystem 980

2277 County Road 156
Cardington, OH 43315-9742

Area:

Author: RAMII

Calculated:

Checked: RN

Sheet Number: E-4

© 2012, Quasar Energy Group, LLC. All rights reserved.

P:\SBE Projects\0058-CAR-OH-11 - Ringler Farms\BUILDING DRAWINGS\CURRENT DRAWINGS (AS BUILT)\RINGLER FARMS ELECTRICAL.dwg
11/15/2013 2:54 PM

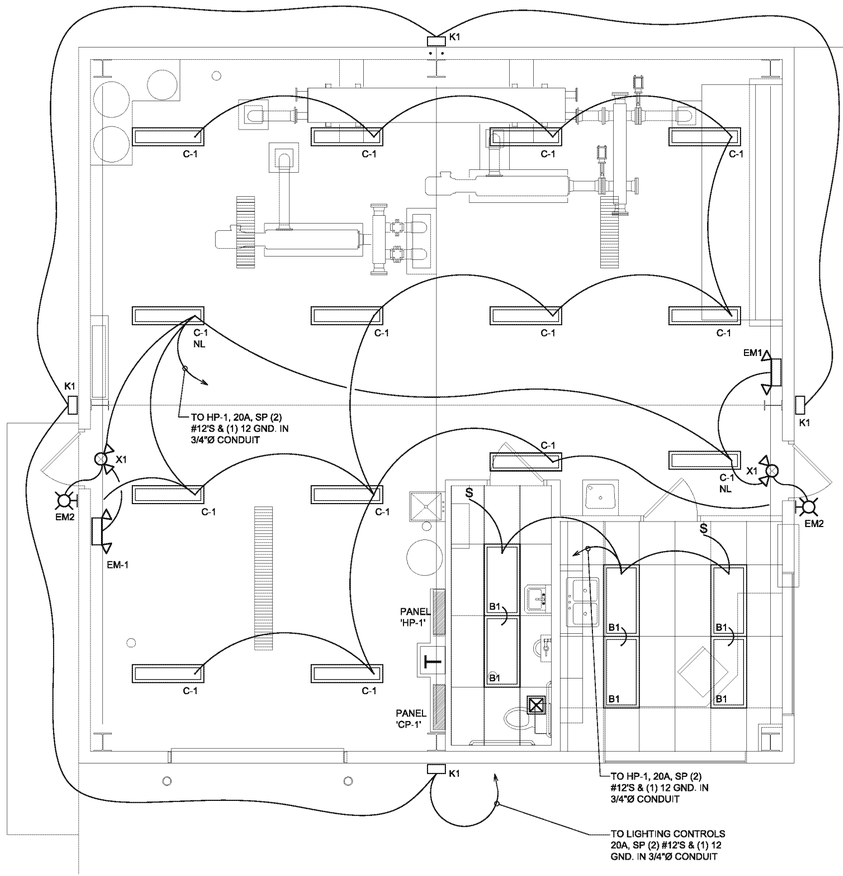

1 LIGHTING PLAN

SCALE: 1/4"=1'-0"

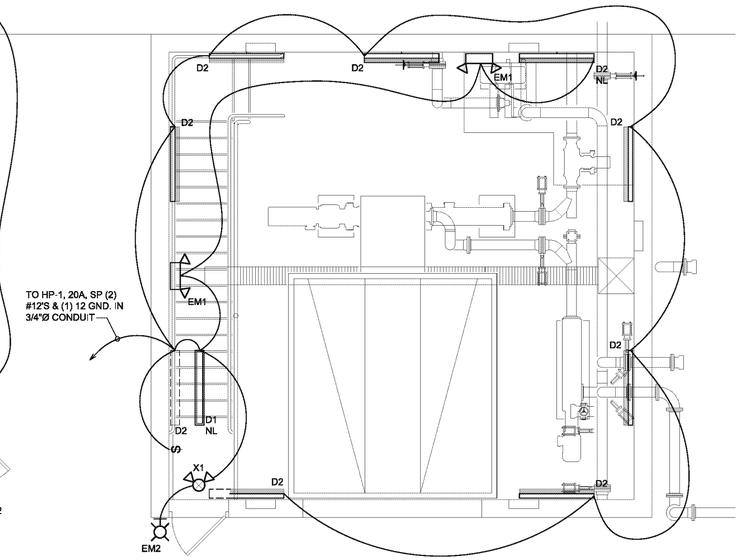

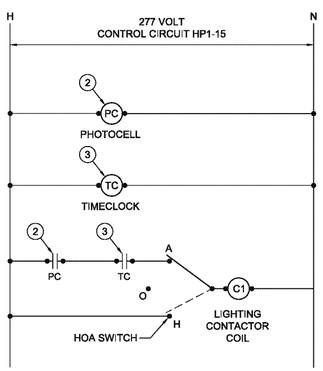

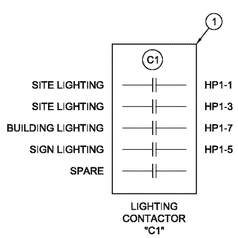

NOMENCLATURE:

1. LIGHTING CONTACTOR "C1" - ELECTRICALLY HELD CONTACTOR WITH FOUR (4) N.O. CONTACTS, HOA SWITCH, AND 277 VOLT OPERATING COIL. (SQUARE "D" CLASS 8903, 30 AMP BALLAST RATED, OR EQUAL BY ASCO). INSTALL SWITCH ON OUTSIDE OF ENCLOSURE.
2. PHOTOCELL - TORK #2104 (277 VOLT). INSTALL ON WALL NEAR ROOF AWAY FROM INTERFERING LIGHT SOURCES.
3. TIME CLOCK "T1" - (277 VOLT) SINGLE CHANNEL WITH 24 HOUR 7 DAY ELECTRONIC TIME CONTROL, 365 DAY CONTROLS WITH DAYLIGHT SAVINGS TIME, LEAP YEAR ADJUSTMENT AND SELECTABLE ASTRONOMICAL TIME CLOCK CONTROLS. UNIT SHALL HAVE 96 HOUR CAPACITOR CARRY OVER OF PROGRAMMING. PARAGON #EL71/277. INSTALL IN ENCLOSURE WITH LIGHTING CONTACTOR.

2 OUT DOOR LIGHTING CONTROL DIAGRAM

SCALE: NONE

LIGHTING FIXTURE SCHEDULE

FIXTURE TYPE	LAMPS QUANTITY FLUORESCENT	INCANDESCENT	H.I.D.	L.E.D. OPERATING WATTS	WATTS / LAMP	WATTS / FIXTURE	LAMP CAT. NO.	VOLTAGE	DESCRIPTION	MANUF.	CATALOG NO./SERIES	OTHER ACCEPTABLE MANUF.	NOTES
B1	3				32	110	F32T8/SP30	277	2' X 4' SPECIFICATION GRADE TROFFER, GRID CEILING RECESS MOUNT, W/SPECULAR PARA-HEXAGONAL LOUVER	METALUX	2GC332-PHS	LITHONIA, COLUMBIA' WILLIAMS	
C1	2				32	70	F32T8/SP30	277	1' X 4' BARE LAMP INDUSTRIAL CEILING SURFACE MOUNT	METALUX	IA232	LITHONIA, COLUMBIA' WILLIAMS	
D1	2				32	70	F32T8/SP30	277	4' LONG VAPORTIGHT FLUORESCENT LIGHT FIXTURE, SURFACE MOUNTED ON CEILING	METALUX	VT3-232-DR-UNV-EB8-1-WL	LITHONIA, COLUMBIA' WILLIAMS	
D2	2				32	70	F32T8/SP30	277	4' LONG VAPORTIGHT FLUORESCENT LIGHT FIXTURE, SURFACE MOUNTED ON WALL 8'-0" ABOVE FLOOR	METALUX	VT3-232-DR-UNV-EB8-1-WL	LITHONIA, COLUMBIA' WILLIAMS	
EM1	LAMPS FURNISHED WITH FIXTURE							277	TWIN HEAD BATTERY POWER EMERGENCY LIGHT, WALL MOUNT AT 90" AFF.	SURELITES	AA-8-1	LITHONIA, PRESCOLITE, SILTRON	
EM2	LAMPS FURNISHED WITH FIXTURE							6	REMOTE EMERGENCY EGRESS LAMP HEAD, WEATHERPROOF, 8 WATT HALOGEN LAMP	SURELITES	6T-8-W	LITHONIA, PRESCOLITE, SILTRON	
K1	LAMPS FURNISHED WITH FIXTURE							277	LED WALL PACK, CLEAR TEMPERED GLASS MOUNT AT 10' AFG, EXTERIOR COLOR-BRONZE	MCGRAW-EDISON	1ST-AG2-LED-E1-GZW-B2	MOLDCAST, DEVINE, HYDREL, LSI (GREENLEE)	
X1	LAMPS FURNISHED WITH FIXTURE							277	L.E.D. EXIT SIGN, POLYCARBONATE, WALL MOUNT, WITH TWO EM EGRESS LAMPS, BATTERY BACKUP, REMOTE LAMP BATTERY CAPACITY.	SURELITES	LPX-H-70-RWH-DH	LITHONIA, PRESCOLITE, SILTRON	
SB			1		400	460	400 METAL HALIDE PULSE START	277	AREA POLE MOUNTED LUMINAIRE WITH DIE-CAST, SOFT CORNER ALUMINUM HOUSING AND TYPE 3 LIGHT DISTRIBUTION.	LITHONIA	KAD 400M R3 277 SPD04 SCWA DDB LP1 WITH 25' POLE SSP 25 4.0 7-BRZ-DM10-BC	SPAULDING McGRAW-EDISON JPL	
SD			1		400	460	400 METAL HALIDE PULSE START	277	AREA POLE MOUNTED FLOODLIGHT WITH TENON MOUNTING, DIE-CAST, SOFT CORNER ALUMINUM HOUSING AND HORIZONTAL LIGHT DISTRIBUTION.	LITHONIA	TFA 400M TA 277 IS SCWA DDB LPI WITH 25' POLE SSP 25 4.0 7-BRZ-2-BC	SPAULDING McGRAW-EDISON JPL	
SE			2		400	920	400 METAL HALIDE PULSE START	277	DUAL AREA POLE MOUNTED FLOODLIGHT WITH MOUNTING BRACKET, DIE-CAST, SOFT CORNER ALUMINUM HOUSING AND HORIZONTAL LIGHT DISTRIBUTION.	LITHONIA	(2)TFA 400M TA 277 IS SCWA DDB LPI WITH 25' POLE SSP 25 4.0 7-BRZ-2-BC-(1) FA2180-36-2-BRZ-2	SPAULDING McGRAW-EDISON JPL	

LIGHTING FIXTURE SCHEDULE NOTES

GENERAL NOTES:

VERIFY ALL CEILING TYPES WITH A/E PRIOR TO ORDERING FIXTURES. REFER TO ELECTRICAL SPECIFICATIONS FOR BALLAST SPECIFICATIONS.

quasar energy group
7624 Riverview Road
PO Box 31023
Cleveland OH 44141
Phone: 216.986.9999

Scale: SEE DETAIL

This drawing contains valuable confidential and proprietary information that belongs to quasar energy group, llc ("quasar"), and is subject to a separate Confidentiality and Nondisclosure Agreement. quasar is the author and owner of this drawing, and retains all common law, statutory and other rights and privileges with respect hereto, including copyrights. The information contained herein may not at any time be used for any unauthorized purpose, nor reproduced by or provided to any third party, without the prior written consent of quasar.

AS BUILT

Rev.	ECN Number	Date
2		
1		
0	AS BUILT	__/__/__

Drawing Name:
PLANT LIGHTING PLAN, LIGHT FIXTURE SCHEDULE, AND OUT DOOR LIGHTING CONTROL DIAGRAM

Project Name and Address:
0058-CAR-OH-11

RINGLER FARMS
ADS Facility
ecoFarmsystem 980

2277 County Road 156
Cardington, OH 43315-9742

Area:
Author: RAMII
Calculated:
Checked: RN
Sheet Number: E-5

P:\SBE Projects\0058-CAR-OH-11 - Ringler Farms\BUILDING DRAWINGS\CURRENT DRAWINGS (AS BUILT)\RINGLER FARMS ELECTRICAL.dwg
11/15/2013 2:53 PM

© 2012, Quasar Energy Group, LLC. All rights reserved.

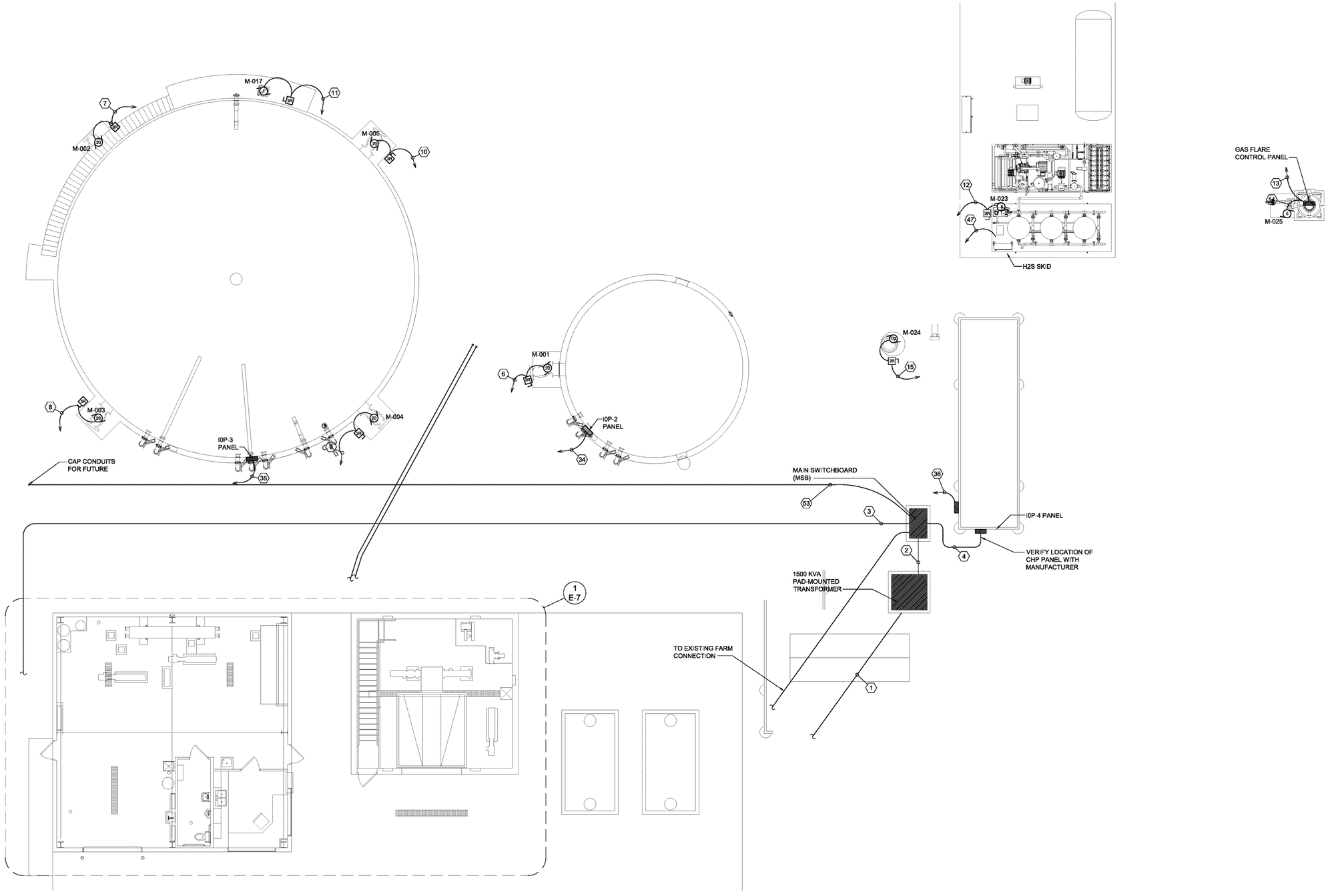

1 POWER PLAN

SCALE: 1/8"=1'-0"

quasar energy group
7624 Riverview Road
PO Box 31023
Cleveland OH 44141
Phone: 216.986.9999

Scale: NONE

This drawing contains valuable confidential and proprietary information that belongs to quasar energy group, llc ("quasar"), and is subject to a separate Confidentiality and Nondisclosure Agreement. quasar is the author and owner of this drawing, and retains all common law, statutory and other rights and privileges with respect hereto, including copyrights. The information contained herein may not at any time be used for any unauthorized purpose, nor reproduced by or provided to any third party, without the prior written consent of quasar.

AS BUILT

Rev.	ECN Number	Date
2		
1		
0	AS BUILT	__/__/__

Drawing Name:
POWER PLAN

Project Name and Address:
0058-CAR-OH-11

RINGLER FARMS
ADS Facility
ecoFarmsystem 980

2277 County Road 156
Cardington, OH 43315-9742

Area:

Author: RAMII

Calculated:

Checked: RN

Sheet Number: E-6

© 2012, Quasar Energy Group, LLC. All rights reserved.

P:\SBE Projects\0058-CAR-OH-11 - Ringler Farms\BUILDING DRAWINGS\CURRENT DRAWINGS (AS BUILT)\RINGLER FARMS ELECTRICAL.dwg
11/15/2013 2:52 PM

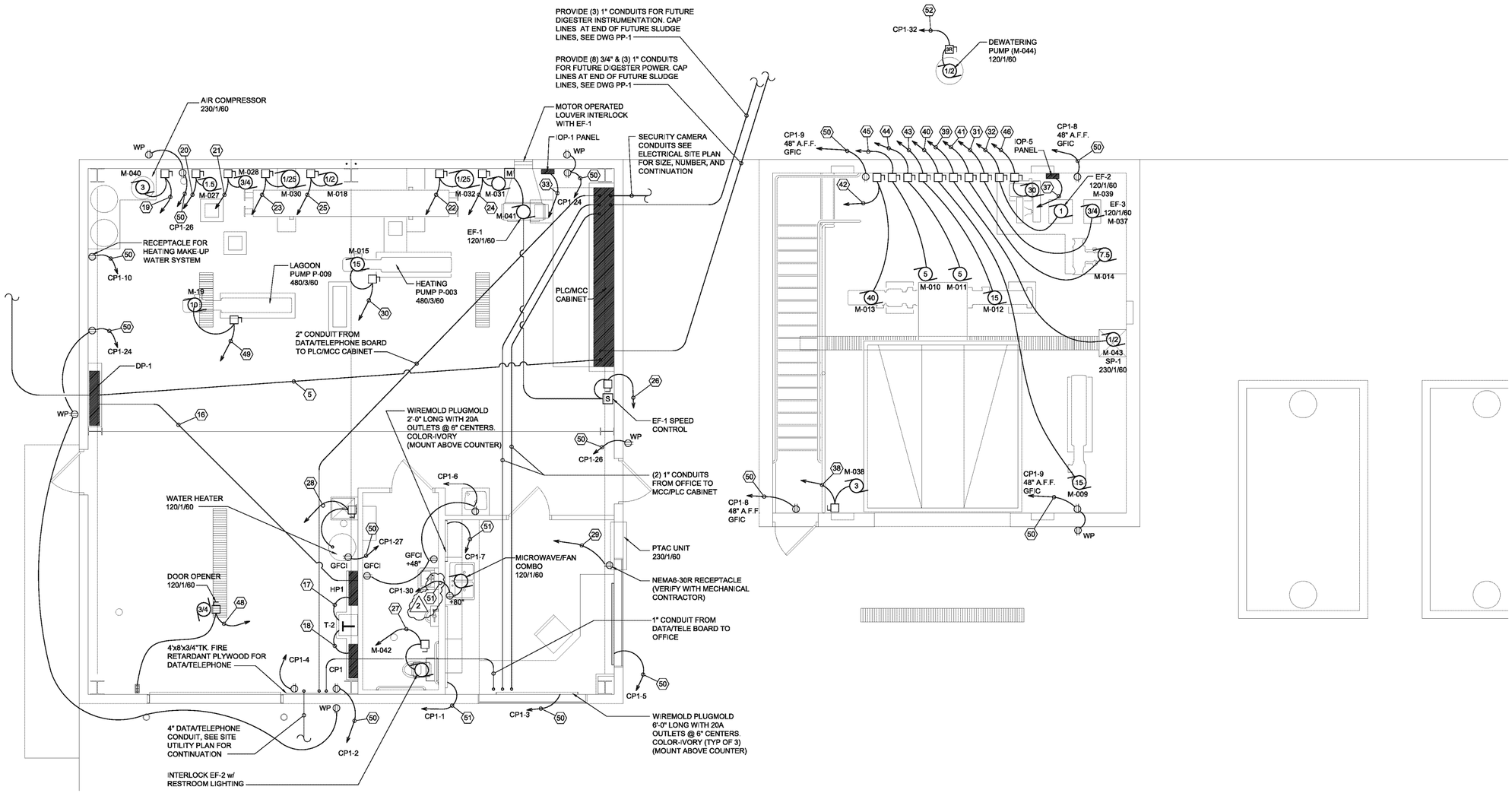

1 ENLARGED POWER PLAN

SCALE: 1/8"=1'-0"

quasar energy group
7624 Riverview Road
PO Box 31023
Cleveland OH 44141
Phone: 216.986.9999

Scale: NONE

This drawing contains valuable confidential and proprietary information that belongs to quasar energy group, llc ("quasar"), and is subject to a separate Confidentiality and Nondisclosure Agreement. quasar is the author and owner of this drawing, and retains all common law, statutory and other rights and privileges with respect hereto, including copyrights. The information contained herein may not at any time be used for any unauthorized purpose, nor reproduced by or provided to any third party, without the prior written consent of quasar.

AS BUILT

Rev.	ECN Number	Date
2		
1		
0	AS BUILT	__/__/__

Drawing Name:
POWER PLAN

Project Name and Address:
0058-CAR-OH-11

RINGLER FARMS
ADS Facility
ecoFarmsystem 980

2277 County Road 156
Cardington, OH 43315-9742

Area:

Author: RAMII

Calculated:

Checked: RN

Sheet Number: E-7

© 2012, Quasar Energy Group, LLC. All rights reserved.

P:\SBE Projects\0058-CAR-OH-11 - Ringler Farms\BUILDING DRAWINGS\CURRENT DRAWINGS (AS BUILT)\RINGLER FARMS ELECTRICAL.dwg
11/15/2013 2:52 PM

CONDUIT AND CABLE SCHEDULE

CONDUIT No.	DESIGNATION FROM	DESIGNATION TO	CONDUIT SIZE	WIRE - CABLE QTY.	WIRE - CABLE SIZE	REMARKS
1	DIP POLE	1500 KVA TRANSFORMER (PRIMARY SIDE)	1 SET OF 4" SCH 40 PVC			3-1/C #4/0 15KV EPR INSULATION CABLE WITH 1/3 CONCENTRIC NEUTRAL. PROVIDE SPARE 4" PVC CONDUIT. ENCASE CONDUITS IN CONCRETE.
2	1500 KVA TRANSFORMER (SECONDARY SIDE)	MAIN SWITCH BOARD (MSB)	5 SET OF 4" SCH 40 PVC	3 1	#600 KCMIL #600 KCMIL	POWER NEUTRAL
3	MAIN SWITCHBOARD (MSB)	DISTRIBUTION PANEL (DP-1)	2 SETS OF 4" SCH 40 PVC	3 1 1	#350 KCML #350 KCML #3/0 AWG	POWER NEUTRAL GROUND
4	MAIN SWITCHBOARD (MSB)	CHP CIRCUIT BREAKER	5 SETS OF 4" SCH 40 PVC	3 1 1	#600 KCML #600 KCML #3/0 AWG	POWER NEUTRAL GROUND
5	DISTRIBUTION PANEL (DP-1)	PLC/MCC	4"	3 1 1	#600 KCML #600 KCML #3/0 AWG	POWER NEUTRAL GROUND
6	PLC/MCC	SIDE ENTRY MIXER MOTOR (20 H.P., 480/3/60) #M001	3/4"	3 1	#8 AWG #10 AWG	POWER GROUND
7	PLC/MCC	SIDE ENTRY MIXER MOTOR (20 H.P., 480/3/60) #M002	1-1/4"	3 1	#6 AWG #10 AWG	POWER GROUND
8	PLC/MCC	SIDE ENTRY MIXER MOTOR (20 H.P., 480/3/60) #M003	3/4"	3 1	#12 AWG #12 AWG	POWER GROUND
9	PLC/MCC	SIDE ENTRY MIXER MOTOR (20 H.P., 480/3/60) #M004	3/4"	1 1 1	#12 AWG #12 AWG #12 AWG	POWER NEUTRAL GROUND
10	PLC/MCC	SIDE ENTRY MIXER MOTOR (20 H.P., 480/3/60) #M005	3/4"	3 1	#12 AWG #12 AWG	POWER GROUND
11	PLC/MCC	DOUBLE ROOF BLOWER (1-1/2 H.P., 480/3/60) #M017	3/4"	3 1	#12 AWG #12 AWG #12 AWG	POWER NEUTRAL GROUND
12	CHP PANEL	GAS BLOWER MOTOR (5 HP, 480/3/60) #M023	1"	3 1	#12 AWG #12 AWG	POWER GROUND
13	DP-1	FLARE CONTROL PANEL	1"	3 1	#8 AWG #10 AWG	POWER GROUND
14	FLARE CONTROL PANEL	BIOGAS BLOWER (5 H.P. 480/3/60) #M025	3/4"	3 1	#12 AWG #12 AWG	POWER GROUND
15	CP-1	CONDENSATE TRAP (1/2 HP 120/1/60) #M-024	3/4"	1 1 1	#12 AWG #12 AWG #12 AWG	POWER NEUTRAL GROUND
16	DP-1	HP1	2-1/2"	3 1 1	#3/0 AWG #3/0 AWG #6 AWG	POWER NEUTRAL GROUND
17	HP1	TRANSFORMER T-2 (PRIMARY SIDE)	1-1/2"	3 1	#4 AWG #8 AWG	POWER GROUND
18	TRANSFORMER T-2 (SECONDARY SIDE)	CP1	2"	2 1 1	#1/0 AWG #1/0 AWG #6 AWG	POWER NEUTRAL GROUND
19	CP1	AIR COMPRESSOR (3 HP, 230/1/60) #M040	3/4"	2 1	#10 AWG #12 AWG	POWER GROUND
20	PLC/MCC	HOT WATER MANIFOLD PUMP (1-1/2 HP 460/3/60) #M027	3/4"	3 1	#12 AWG #12 AWG	POWER GROUND
21	PLC/MCC	HOTWATER HEAT EXCHANGER LOOP PUMP (3/4" HP 460/3/60) #M028	3/4"	3 1	#12 AWG #12 AWG	POWER GROUND
22	CP1	HOT WATER PIT FLOOR HEAT LOOP PUMP (110 WATTS, 120/1/60) #M032	3/4"	1 1 1	#12 AWG #12 AWG #12 AWG	POWER NEUTRAL GROUND
23	CP1	HOT WATER PIT FLOOR HEAT LOOP PUMP (1/25 HP, 120/1/60) #M030	3/4"	1 1 1	#12 AWG #12 AWG #12 AWG	POWER NEUTRAL GROUND
24	CP1	HOT WATER SNOW MELT HEAT LOOP PUMP (310 WATTS, 120/1/60) #M031	3/4"	1 1 1	#12 AWG #12 AWG #12 AWG	POWER NEUTRAL GROUND
25	PLC/MCC	DESULFURIZATION BLOWER (1.2 AMPS, 480/3/60) #M018	3/4"	3 1	#12 AWG #12 AWG	POWER GROUND
26	CP1	BUILDING EXHAUSTFAN-EF-1 (735 WATTS, 120/1/60) #041	3/4"	1 1 1	#12 AWG #12 AWG #12 AWG	POWER NEUTRAL GROUND
27	CP1	RESTROOM EXHAUST FAN (EF-2) (48 WATTS, 120/1/60) #42	3/4"	1 1 1	#12 AWG #12 AWG #12 AWG	POWER NEUTRAL GROUND
28	CP-1	WATER HEATER (120/1/60)	3/4"	1 1 1	#12 AWG #12 AWG #12 AWG	POWER NEUTRAL GROUND
29	CP-1	PTAC UNIT (230/1/60)	3/4"	2 1 1	#10 AWG #10 AWG	POWER GROUND VERIFY RECEPTACLE CONFIGURATION WITH MECHANICAL CONTRACTOR
30	PLC/MCC	HEATING/DOSING PUMP (15 HP, 480/3/60), #M015	3/4"	3 1	#10 AWG #10 AWG	POWER GROUND BELDEN CABLE #29503
31	CP1	BIOFILTER EXHAUST FAN (EF-3) (3/4 HP, 120/1/60) #M037	3/4"	1 1 1	#12 AWG #12 AWG #12 AWG	POWER NEUTRAL GROUND
32	CP1	BIOFILTER EXHAUST FAN (EF-4) (1 HP, 120/1/60) #M039	3/4"	1 1 1	#10 AWG #10 AWG #10 AWG	POWER NEUTRAL GROUND
33	PLC/MCC CABINET	IOP-1 PANEL (120/1/60)	3/4"	1 1 1	#12 AWG #12 AWG #12 AWG	POWER NEUTRAL GROUND
34	PLC/MCC CABINET	IOP-2 PANEL (120/1/60)	3/4"	3 1	#12 AWG #12 AWG	POWER GROUND

CONDUIT AND CABLE SCHEDULE CONT.

CONDUIT No.	DESIGNATION FROM	DESIGNATION TO	CONDUIT SIZE	WIRE - CABLE QTY.	WIRE - CABLE SIZE	REMARKS
35	PLC/MCC CABINET	IOP-3 PANEL (120/1/60)	3/4"	3 1	#12 AWG #12 AWG	POWER GROUND
36	PLC/MCC CABINET	IOP-4 PANEL (120/1/60)	3/4"	3 1	#8 AWG #10 AWG	POWER GROUND
37	PLC/MCC CABINET	IOP-5 PANEL (120/1/60)	3/4"	1 1 1	#12 AWG #12 AWG #12 AWG	POWER NEUTRAL GROUND
38	CP-1	PIT COVER HYDRAULIC MOTOR (3 HP, 240/1/60) #M038	3/4"	2 1 1	#10 AWG #10 AWG #10 AWG	POWER NEUTRAL GROUND
39	CP-1	SUMP PUMP (1/2 HP, 230/1/60) #M043	3/4"	2 1	#12 AWG #12 AWG	POWER GROUND
40	PLC/MCC	FEEDING/ DILUTION PUMP (15 HP 480/3/60) #M009	1"	3 1	#10 AWG #10 AWG	POWER GROUND BELDEN CABLE #29505
41	PLC/MCC	GINDER (7-1/2 HP, 480/3/60) #M014	3/4"	3 1	#12 AWG #12 AWG	POWER GROUND
42	PLC/MCC	OPEN HOPPER PUMP (40HP 480/3/60) #M013	2"	3 1	#4 AWG #8 AWG	POWER GROUND BELDEN CABLE #29506
43	PLC/MCC	GRINDER (G-002) (15 HP 480/3/60) #M012	1"	3 1	#10 AWG #10 AWG	POWER GROUND BELDEN CABLE #29503
44	PLC/MCC	CONVEYOR #1 (5 HP, 480/3/60) #M-010	1"	3 1	#12 AWG #12 AWG	POWER GROUND BELDEN CABLE #29502
45	PLC/MCC	CONVEYOR #2 (5 HP 480/3/60) #M011	1"	3 1	#12 AWG #12 AWG	POWER GROUND BELDEN CABLE #29502
46	PLC/MCC	HUSKEY PUMP (P-013) (30 HP 480/3/60) #M016	1-1/4"	3 1	#6 AWG #10 AWG	POWER GROUND
47	HP-1	H2S SKID 480/3/60	1-1/4"	3 1	#6 AWG #10 AWG	POWER GROUND
48	CP-1	DOOR OPENER (3/4 HP,120/1/60)	3/4"	1 1 1	#12 AWG #12 AWG #12 AWG	POWER NEUTRAL GROUND
49	PLC/MCC	LAGOON PUMP (P-009) (15 HP, 480/3/60) #M019	1"	3 1	#10 AWG #10 AWG	POWER GROUND BELDEN CABLE #29503
50	CP-1	RECEPTACLES	3/4"	1 1 1	#12 AWG #12 AWG #12 AWG	POWER NEUTRAL GROUND
51	CP-1	RECEPTACLES (GFI BREAKER)	3/4"	1 1 1	#12 AWG #12 AWG #12 AWG	POWER NEUTRAL GROUND
52	CP-1	DEWATERING PUMP (1/2 HP 120/1/60) #M044	3/4"	1 1 1	#12 AWG #12 AWG #12 AWG	POWER NEUTRAL GROUND
53	MSB	FUTURE DEWATERING PROCESS	4"			CONDUITS CAPPED FOR FUTURE
54	MSB	DISTRIBUTION PANEL DP-3	4"	3 1 1	#600 KCML #600 KCML #3/0 AWG	POWER NEUTRAL GROUND
55	TRANSFORMER T-3 SECONDARY SIDE	FUSED DISCONNECT	2 SETS OF 4" SCH40 PVC	2 1 1	#350 KCML #350 KCML #3/0 AWG	POWER NEUTRAL GROUND
56	FUSED DISCONNECT	EXISTING FARM FEED	2 SETS OF 4" SCH40 PVC	2 1 1	#350 KCML #350 KCML #3/0 AWG	POWER NEUTRAL GROUND
57	HP-1	HEAT TRACE	1"	1 1 1	#10 AWG #10 AWG #10 AWG	POWER NEUTRAL GROUND
58	DP-1	DP-2	2"	(3) (1)	#2 THNN #4 THNN	POWER GROUND
59	PLC/MCC	PLC-2	1"			FIBEROPTIC CABLE
60	DP-2	PLC#2	1"	3 1	#6 AWG #10 AWG	POWER GROUND
61	DP-2	TRANSFORMER T-4 PRIMARY SIDE	3/4"	3 1	#12 AWG #12 AWG	POWER GROUND
62	TRANDSFORMER T-4 SECONDARY SIDE	CP-2	1"	2 1 1	#6 AWG #6 AWG #8 AWG	POWER NEUTRAL GROUND
63	EF-6	CP-2	3/4"	1 1 1	#12 AWG #12 AWG #12 AWG	POWER NEUTRAL GROUND
64	CAMERA	PLC-2	3/4"	1	CAT5	
65	OUTLET	CP-2	3/4"	2 1	#12 AWG #12 AWG	POWER GROUND
66	SUMP	CP-2	3/4"	1 1 1	#12 AWG #12 AWG #12 AWG	POWER NEUTRAL GROUND
67	M-044	PLC-2	1"	3 1	#8 AWG #10 AWG	POWER GROUND
68	DISTRIBUTION PANEL DP-3	TRANSFROMER T-3 PRIMARY SIDE	2 1/2"	3 1	#3/0 AWG #6 AWG	POWER GROUND

NOTES:

1. ALL CONDUIT WITHIN THE CONTAINERS AND ALL ABOVE GRADE INSTALLATIONS SHALL BE RIGID GALVANIZED STEEL UNION.
2. ALL UNDERGROUND CONDUIT SHALL BE PVC SCHEDULE 40 TO ONE (1) FOOT BELOW GRADE. AT THIS POINT THE PVC SCHEDULE 40 CONDUIT SHALL TRANSITION TO EQUIVALENT SIZE RIGID GALVANIZED STEEL CONDUIT.
3. ALL CONDUCTOR INSULATION TYPE SHALL BE THHN/THWN 600 VOLT RATED UON.
4. ALL CONDUIT RUNS TO MOTORS ARE VIA LOCAL SAFETY SWITCHES AS INDICATED ON THE ONE LINE DIAGRAM DRAWING AND THE POWER PLAN DRAWINGS.
5. PROVIDE WIRE/CABLE PER MANUFACTURER'S RECOMMENDATIONS
6. COLOR CODE BRANCH CIRCUIT AND FEEDER CONDUCTORS AS FOLLOWS:

120/208-VOLT
3-PHASE
4-WIRE SYSTEM
PHASE A - BLACK (BLK)

PHASE B - RED
PHASE C - BLUE (BLU)
NEUTRAL - WHITE
GROUND - GREEN

277/480-VOLT
3-PHASE
4-WIRE SYSTEM
PHASE A - BROWN (BRN)

PHASE B - ORANGE (ORG)
PHASE C - YELLOW (YEL)
NEUTRAL - GRAY
GROUND - GREEN

quasar energy group
7624 Riverview Road
PO Box 31023
Cleveland OH 44141
Phone: 216.986.9999

Scale: NONE

This drawing contains valuable confidential and proprietary information that belongs to quasar energy group, llc ("quasar"), and is subject to a separate Confidentiality and Nondisclosure Agreement. quasar is the author and owner of this drawing, and retains all common law, statutory and other rights and privileges with respect hereto, including copyrights. The information contained herein may not at any time be used for any unauthorized purpose, nor reproduced by or provided to any third party, without the prior written consent of quasar.

AS BUILT

Rev.	ECN Number	Date
2		
1		
0	AS BUILT	__/__/__

Drawing Name:
CONDUIT SCHEDULE

Project Name and Address:
0058-CAR-OH-11

RINGLER FARMS
ADS Facility
ecoFarmsystem 980

2277 County Road 156
Cardington, OH 43315-9742

Area:
Author: RAM
Calculated:
Checked: RN
Sheet Number: E-8

© 2012, Quasar Energy Group, LLC. All rights reserved.

P:\SBE Projects\0058-CAR-OH-11 - Ringler Farms\BUILDING DRAWINGS\CURRENT DRAWINGS (AS BUILT)\RINGLER FARMS ELECTRICAL.dwg
11/15/2013 2:51 PM

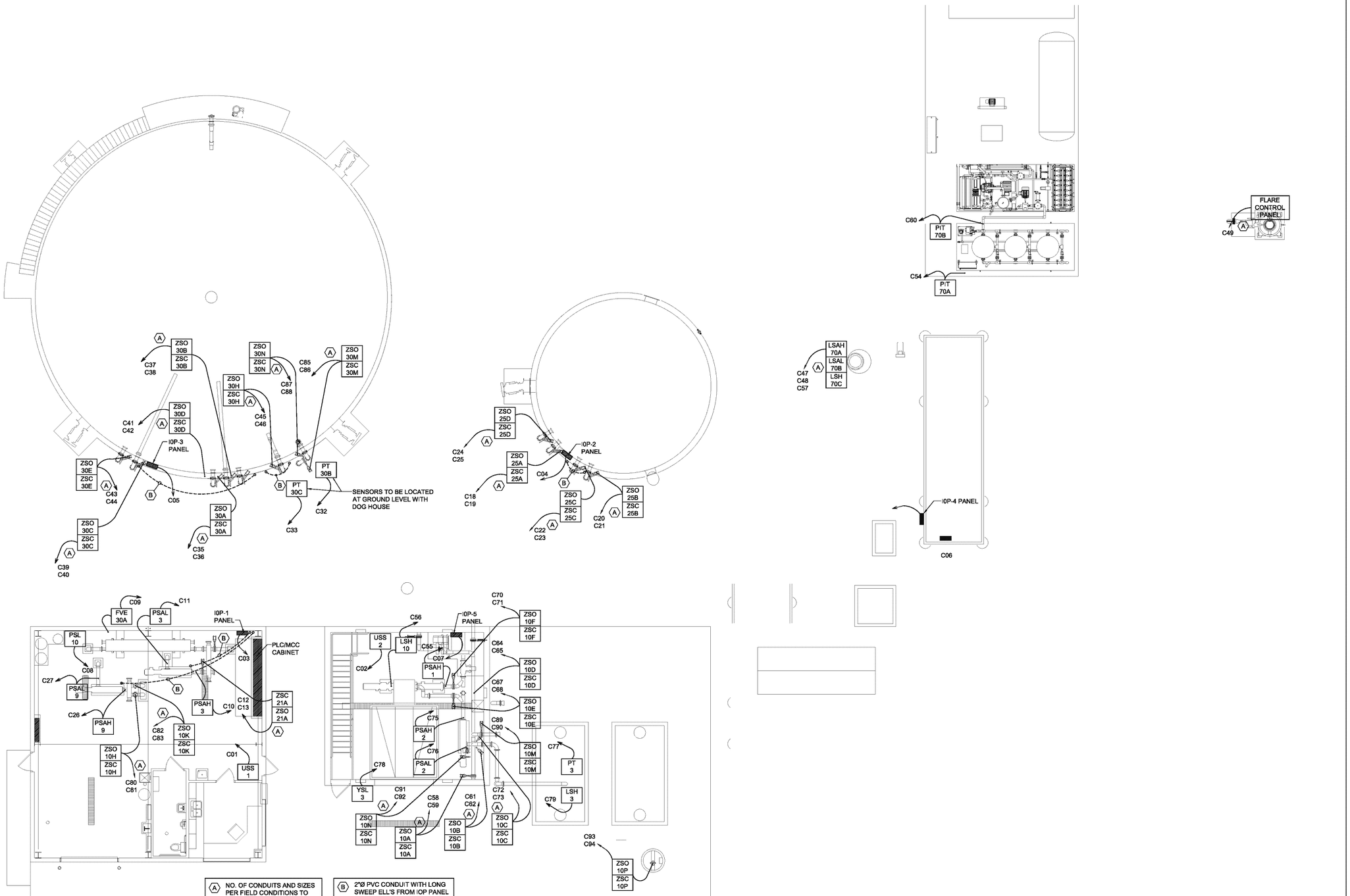

1 INSTRUMENTATION PLAN

SCALE: 1/8"=1'-0"

quasar energy group
7624 Riverview Road
PO Box 31023
Cleveland OH 44141
Phone: 216.986.9999

Scale: NONE

This drawing contains valuable confidential and proprietary information that belongs to quasar energy group, llc ("quasar"), and is subject to a separate Confidentiality and Nondisclosure Agreement. quasar is the author and owner of this drawing, and retains all common law, statutory and other rights and privileges with respect hereto, including copyrights. The information contained herein may not at any time be used for any unauthorized purpose, nor reproduced by or provided to any third party, without the prior written consent of quasar.

AS BUILT

Rev.	ECN Number	Date
2		
1		
0	AS BUILT	__/__/__

Drawing Name:
INSTRUMENTATION PLAN

Project Name and Address:
0058-CAR-OH-11

RINGLER FARMS
ADS Facility
ecoFarmsystem 980

2277 County Road 156
Cardington, OH 43315-9742

Area:

Author: RAM

Calculated:

Checked: RN

Sheet Number: E-9

© 2012, Quasar Energy Group, LLC. All rights reserved.

P:\SBE Projects\0058-CAR-OH-11 - Ringler Farms\BUILDING DRAWINGS\CURRENT DRAWINGS (AS BUILT)\RINGLER FARMS ELECTRICAL.dwg
11/15/2013 2:51 PM

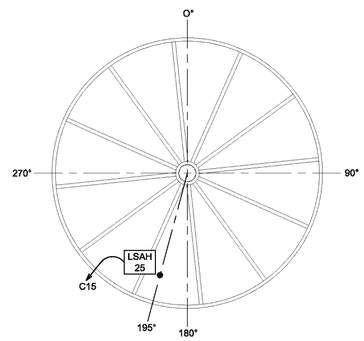

3 INSTRUMENTATION PLAN
SCALE: 1/8"=1'-0"

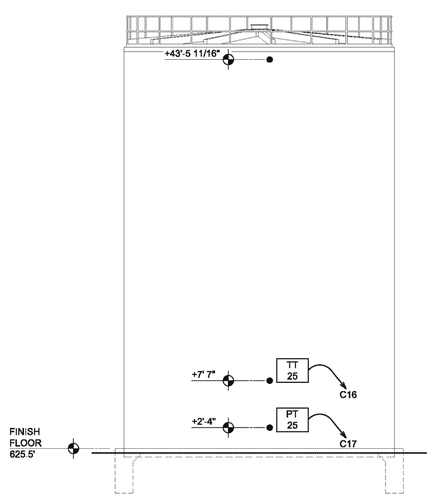

2 INSTRUMENTATION ELEVATION
SCALE: 1/8"=1'-0"

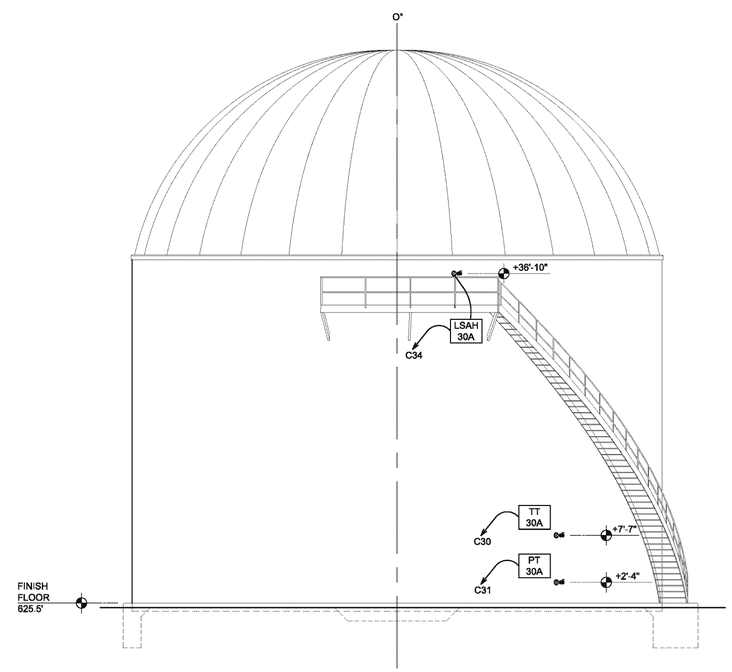

1 INSTRUMENTATION ELEVATION
SCALE: 1/8"=1'-0"

quasar energy group
7624 Riverview Road
PO Box 31023
Cleveland OH 44141
Phone: 216.986.9999

Scale: NONE

This drawing contains valuable confidential and proprietary information that belongs to quasar energy group, llc ("quasar"), and is subject to a separate Confidentiality and Nondisclosure Agreement. quasar is the author and owner of this drawing, and retains all common law, statutory and other rights and privileges with respect hereto, including copyrights. The information contained herein may not at any time be used for any unauthorized purpose, nor reproduced by or provided to any third party, without the prior written consent of quasar.

AS BUILT

Rev.	ECN Number	Date
2		
1		
0	AS BUILT	__/__/__

Drawing Name:
INSTRUMENTATION ELEVATIONS

Project Name and Address:
0058-CAR-OH-11

RINGLER FARMS
ADS Facility
ecoFarmsystem 980

2277 County Road 156
Cardington, OH 43315-9742

Area:

Author: RAMII

Calculated:

Checked: RN

Sheet Number: E-10

P:\SBE Projects\0058-CAR-OH-11 - Ringler Farms\BUILDING DRAWINGS\CURRENT DRAWINGS (AS BUILT)\RINGLER FARMS ELECTRICAL.dwg
11/15/2013 2:50 PM

© 2012, Quasar Energy Group, LLC. All rights reserved.

INSTRUMENTATION CABLE SCHEDULE

CABLE NO.	DESIGNATION FROM	DESIGNATION TO	CONDUIT SIZE	BELDEN CABLE P/N	CABLE O.D.	WIRE - CABLE	REMARKS
C01	PLC CABINET	USS1 E-STOP PUSHBUTTON #1	1"	27327A	0.350	7/C#18	
C02	PLC CABINET	USS2 E-STOP PUSH BUTTON #2	1"	27327A	0.350	7/C#18	
C03	PLC CABINET	IOP-1 PANEL	1"			Cat5e ETHERNET	CABLE OUTDOOR WATERPROOF
C04	PLC CABINET	IOP-2 PANEL	1"			Cat5e ETHERNET	CABLE OUTDOOR WATERPROOF
C05	PLC CABINET	IOP-3 PANEL	1"			Cat5e ETHERNET	CABLE OUTDOOR WATERPROOF
C06	PLC CABINET	IOP-4 PANEL	1"			Cat5e ETHERNET	CABLE OUTDOOR WATERPROOF
C07	PLC CABINET	IOP-5 PANEL	1"			Cat5e ETHERNET	CABLE OUTDOOR WATERPROOF
C08	IOP-1 PANEL	PSL10 AIR COMPRESSOR PRESSURE SWITCH	3/4"	27326A	0.308	4/C #18	
C09	IOP-1 PANEL	FVE30A DESULFURIZATION BLOWER SOLENOID VALVE				3/C #14	
C10	IOP-1 PANEL	PSAH3 PRESSURE SWITCH ON PRESSURE SIDE OF P-003	3/4"	27326A	0.308	4/C #18	
C11	IOP-1 PANEL	PSAL3 PRESSURE SWITCH ON VACUUM SIDE OF P-003	3/4"	27326A	0.308	4/C #18	
C12	IOP-1 PANEL	ZSO21A PROX SWITCH FVK21A OPEN	3/4"	27334A	0.280	3/C #18	
C13	IOP-1 PANEL	ZSC21A PROX SWITCH FVK21A CLOSED	3/4"	27334A	0.280	3/C #18	
C14							
C15	IOP-2 PANEL	LSAH25 T-001 CONDUCTIVITY SENSOR (FOAM DETECTION)	3/4"	1120A	0.278	2/C #18	
C16	IOP-2 PANEL	TT25 T-001 TEMPERATURE TRANSMITTER	3/4"	1120A	0.278	3/C #18	
C17	IOP-2 PANEL	PT25 T-001 PRESSURE TRANSMITTER FOR TANK LEVEL	3/4"	1120A	0.278	2/C #18	
C18	IOP-2 PANEL	ZSO25A PROX SWITCH FVK25A OPEN	3/4"	27334A	0.280	3/C #18	
C19	IOP-2 PANEL	ZSC25A PROX SWITCH FVK25A CLOSED	3/4"	27334A	0.280	3/C #18	
C20	IOP-2 PANEL	ZSO25B PROX SWITCH FVK25B OPEN	3/4"	27334A	0.280	3/C #18	
C21	IOP-2 PANEL	ZSC25B PROX SWITCH FVK25B CLOSED	3/4"	27334A	0.280	3/C #18	
C22	IOP-2 PANEL	ZSO25C PROX SWITCH FVK25C OPEN	3/4"	27334A	0.280	3/C #18	
C23	IOP-2 PANEL	ZSC25C PROX SWITCH FVK25C CLOSED	3/4"	27334A	0.280	3/C #18	
C24	IOP-2 PANEL	ZSO25D PROX SWITCH FVK25D OPEN	3/4"	2733A	0.280	3/C #18	
C25	IOP-2 PANEL	ZSC25D PROX SWITCH FVK25D CLOSED	3/4"	2733A	0.280	3/C #18	
C26	IOP-1 PANEL	PSAH9 PRESSURE SWITCH ON PRESSURE SIDE OF P-009	3/4"	27326A	0.308	4/C #18	
C27	IOP-1 PANEL	PSAL9 PRESSURE SWITCH ON VACUUM SIDE OF P-009	3/4"	27326A	0.308	4/C #18	
C28							
C29							
C30	IOP-3 PANEL	TT30A T-002 TEMPERATURE TRANSMITTER	3/4"	1120A	0.278	2/C #18	
C31	IOP-3 PANEL	PT30A T-002 PRESSURE TRANSMITTER FOR TANK LEVEL	3/4"	1120A	0.278	2/C #18	
C32	IOP-3 PANEL	PT30B T-002 PRESSURE TRANSMITTER FOR GAS PRESSURE	3/4"	1120A	0.278	2/C #18	
C33	IOP-3 PANEL	PT30C T-002 PRESSURE TRANSMITTER FOR INNER MEMBRANE LEVEL	3/4"	1120A	0.278	2/C #18	
C34	IOP-3 PANEL	LSAH30A T-002 CONDUCTIVITY SENSOR (FOAM DETECTION)	3/4"	1120A	0.278	2/C #18	EXPLSION PROOF, SHALL BE WIRED FOR NEC CLASS 1 DIVISION 1
C35	IOP-3 PANEL	ZSO30A PROX SWITCH FVK30A OPEN	3/4"	27334A	0.280	3/C #18	
C36	IOP-3 PANEL	ZSC30A PROX SWITCH FVK30A CLOSED	3/4"	27334A	0.280	3/C #18	
C37	IOP-3 PANEL	ZSO30B PROX SWITCH FVK30B OPEN	3/4"	27334A	0.280	3/C #18	
C38	IOP-3 PANEL	ZSC30B PROX SWITCH FVK30B CLOSED	3/4"	27334A	0.280	3/C #18	
C39	IOP-3 PANEL	ZSO30C POX SWITCH FVK30C OPEN	3/4"	27334A	0.280	3/C #18	
C40	IOP-3 PANEL	ZSC30C PROX SWITCH FVK30C CLOSED	3/4"	27334A	0.280	3/C #18	
C41	IOP-3 PANEL	ZSO30D PROX SWITCH FVK30D OPEN	3/4"	27334A	0.280	3/C #18	
C42	IOP-3 PANEL	ZSC30D PROX SWITCH FVK30D CLOSED	3/4"	27334A	0.280	3/C #18	

INSTRUMENTATION CABLE SCHEDULE

CABLE NO.	DESIGNATION FROM	DESIGNATION TO	CONDUIT SIZE	BELDEN CABLE P/N	CABLE O.D.	WIRE - CABLE	REMARKS
C43	IOP-3 PANEL	ZSO30E PROX SWITCH FVK30D OPEN	3/4"	27334A	0.280	3/C #18	
C44	IOP-3 PANEL	ZSC30E PROX SWITCH FVK30D CLOSED	3/4"	27334A	0.280	3/C #18	
C45	IOP-3 PANEL	ZSO30H PROX SWITCH FVK30D OPEN	3/4"	27334A	0.280	3/C #18	
C46	IOP-3 PANEL	ZSC30H PROX SWITCH FVK30D CLOSED	3/4"	27334A	0.280	3/C #18	
C47	IOP-4 PANEL	CONDENSATE TRAP DEVICE LSAH70A				3/C #14	
C48	IOP-4 PANEL	CONDENSATE TRAP DEVICE LSAL70B				3/C #14	
C49	IOP-4 PANEL	FLARE CONTROL PANEL FLARE RUN, RESET COMMANDS & 4 STATUS SIGNALS	1"	27606A	.5	16/C#18	
C50	IOP-4 PANEL	CHP CONTROL CABINET FOR CONTROL PERCENTAGE & GAS ANALYZER SIGNALS	1-1/4"	1050A	0.675	8-SHTWPR#18	ALL WITH IN CHP
C51	IOP-4 PANEL	CHP CONTROL CABINET FOR COMMUNICATIONS	3/4"			Cat5e ETHERNET	ALL WITH IN CHP / CABLE OUTDOOR & WATERPROOF
C52	IOP-4 PANEL	CHP HMI FOR COMMUNICATIONS	3/4"			Cat5e ETHERNET	ALL WITH IN CHP
C53							
C54	CHP	PIT70A BIOGAS BLOWER PRESSURE TRANSMITTER	3/4"			1-SHTWPR#16	
C55	IOP-5 PANEL	PSAH1 PRESSURE SWITCH ON PRESSURE SIDE OF P-001	3/4"	27326A	0.308	4/C #18	
C56	IOP-5 PANEL	LSH10 LEVEL SENSOR IN HOPPER H-002	3/4"	27326A	0.308	4/C #18	
C57	IOP-4 PANEL	LSH70C LEVEL SENSOR WITH CONDENSATE TRAP	3/4"	27326A	0.308	2/C #18	
C58	IOP-5 PANEL	ZSO10A PROX SWITCH FVK10A OPEN	3/4"	27334A	0.280	3/C #18	
C59	IOP-5 PANEL	ZSC10A PROX SWITCH FVK10A CLOSED	3/4"	27334A	0.280	3/C #18	
C60	GAS UPGRADE	PIT70B BIOGAS BLOWER PRESSURE TRANSMITTER	3/4"			1-SHTWPR#16	
C61	IOP-5 PANEL	ZSO10B PROX SWITCH FVK10B	3/4"	27334A	0.280	3/C #18	
C62	IOP-5 PANEL	ZSC10B PROX SWITCH FVK10B CLOSED	3/4"	27334A	0.280	3/C #18	
C63							
C64	IOP-5 PANEL	ZSO10D PROX SWITCH FVK10D OPEN	3/4"	27334A	0.280	3/C #18	
C65	IOP-5 PANEL	ZSC10D PROX SWITCH FVK10D CLOSED	3/4"	27334A	0.280	3/C #18	
C66							
C67	IOP-5 PANEL	ZSO10E PROX SWITCH FVK10E OPEN	3/4"	27334A	0.280	3/C #18	
C68	IOP-5 PANEL	ZSC10E PROX SWITCH FVK10E CLOSED	3/4"	27334A	0.280	3/C #18	
C69							
C70	IOP-5 PANEL	ZSO10F PROX SWITCH FVK10F OPEN	3/4"	27334A	0.280	3/C #18	
C71	IOP-5 PANEL	ZSC10F PROX SWITCH FVK10F CLOSED	3/4"	27334A	0.280	3/C #18	
C72	IOP-5 PANEL	ZSO10C PROX SWITCH FVK10C OPEN	3/4"	27334A	0.280	3/C #18	
C73	IOP-5 PANEL	ZSC10C PROX SWITCH FVK10C CLOSED	3/4"	27334A	0.280	3/C #18	
C74							
C75	IOP-5 PANEL	PSAH2 PRESSURE SWITCH ON PRESSURE SIDE OF P-002	3/4"	27326A	0.308	4/C #18	
C76	IOP-5 PANEL	PSAL2 PRESSURE SWITCH ON VACUUM SIDE OF P-002	3/4"	27326A	0.308	4/C #18	
C77	IOP-5 PANEL	PT3 T-003 PRESSURE TRANSMITTER FOR PIT LEVEL	3/4"	1120A	0.278	2/C #16	
C78	IOP-5 PANEL	YSL3 T-003 FULL STROBE LIGHT				3/C #16	
C79	IOP-5 PANEL	LSH3 LEVEL SENSOR IN LIQUIDS RECEIVING TANK	3/4"	27326A	0.308	4/C #18	
C80	IOP-1 PANEL	ZSO10H PROX SWITCH FVK10H OPEN	3/4"	27334A	0.280	3/C #18	
C81	IOP-1 PANEL	ZSC10H PROX SWITCH FVK10H CLOSED	3/4"	27334A	0.280	3/C #18	
C82	IOP-1 PANEL	ZSO10K PROX SWITCH FVK10K OPEN	3/4"	27334A	0.280	3/C #18	
C83	IOP-1 PANEL	ZSC10K PROX SWITCH FVK10K CLOSED	3/4"	27334A	0.280	3/C #18	
C84							

INSTRUMENTATION CABLE SCHEDULE

CABLE NO.	DESIGNATION FROM	DESIGNATION TO	CONDUIT SIZE	BELDEN CABLE P/N	CABLE O.D.	WIRE - CABLE	REMARKS
C85	IOP-3 PANEL	ZSO30M PROX SWITCH FVK30M OPEN	3/4"	27334A	0.280	3/C #18	
C86	IOP-3 PANEL	ZSC30M PROX SWITCH FVK30M CLOSED	3/4"	27334A	0.280	3/C #18	
C87	IOP-3 PANEL	ZSO30N PROX SWITCH FVK30N OPEN	3/4"	27334A	0.280	3/C #18	
C88	IOP-3 PANEL	ZSC30N PROX SWITCH FVK30N CLOSED	3/4"	27334A	0.280	3/C #18	
C89	IOP-5 PANEL	ZSO10M PROX SWITCH FVK10M OPEN	3/4"	27334A	0.280	3/C #18	
C90	IOP-5 PANEL	ZSC10M PROX SWITCH FVK10M CLOSED	3/4"	27334A	0.280	3/C #18	
C91	IOP-5 PANEL	ZSO10N PROX SWITCH FVK10N OPEN	3/4"	27334A	0.280	3/C #18	
C92	IOP-5 PANEL	ZSC10N PROX SWITCH FVK10N CLOSED	3/4"	27334A	0.280	3/C #18	
C93	IOP-5 PANEL	ZSO10P PROX SWITCH FVK10P OPEN	3/4"	27334A	0.280	3/C #18	
C94	IOP-5 PANEL	ZSC10P PROX SWITCH FVK10P CLOSED	3/4"	27334A	0.280	3/C #18	
C95							
C96	PLC-2	ZSO15A PROX SWITCH FVK15A OPEN	3/4"	27334A	0.280	3/C #18	
C97	PLC-2	ZSC15A PROX SWITCH FVK15A CLOSED	3/4"	27334A	0.280	3/C #18	
C98	PLC-2	ZSO15B PROX SWITCH FVK15B OPEN	3/4"	27334A	0.280	3/C #18	
C99	PLC-2	ZSC15B PROX SWITCH FVK15B CLOSED	3/4"	27334A	0.280	3/C #18	
C100	PLC-2	ZSO15C PROX SWITCH FVK15C OPEN	3/4"	27334A	0.280	3/C #18	
C101	PLC-2	ZSC15C PROX SWITCH FVK15C CLOSED	3/4"	27334A	0.280	3/C #18	
C102	PLC-2	ZSO15E PROX SWITCH FVK15E OPEN	3/4"	27334A	0.280	3/C #18	
C103	PLC-2	ZSC15E PROX SWITCH FVK15E CLOSED	3/4"	27334A	0.280	3/C #18	
C104	PLC-2	ZSO15F PROX SWITCH FVK15F OPEN	3/4"	27334A	0.280	3/C #18	
C105	PLC-2	ZSC15F PROX SWITCH FVK15F CLOSED	3/4"	27334A	0.280	3/C #18	
C106	PLC-2	ZSO15G PROX SWITCH FVK15G OPEN	3/4"	27334A	0.280	3/C #18	
C107	PLC-2	ZSC15G PROX SWITCH FVK15G CLOSED	3/4"	27334A	0.280	3/C #18	
C108	PLC-2	ZSO15H PROX SWITCH FVK15H OPEN	3/4"	27334A	0.280	3/C #18	
C109	PLC-2	ZSC15H PROX SWITCH FVK15H CLOSED	3/4"	27334A	0.280	3/C #18	
C110	PLC-2	PT3 T-012 PRESSURE TRANSMITTER FOR PIT LEVEL	3/4"	1120A	0.278	2/C #16	
C111	PLC-2	LSH3 LEVEL SENSOR IN TRANSFER PIT	3/4"	27326A	0.308	4/C #18	

quasar energy group

quasar energy group
7624 Riverview Road
PO Box 31023
Cleveland OH 44141
Phone: 216.986.9999

Scale: NONE

This drawing contains valuable confidential and proprietary information that belongs to quasar energy group, llc ("quasar"), and is subject to a separate Confidentiality and Nondisclosure Agreement. quasar is the author and owner of this drawing, and retains all common law, statutory and other rights and privileges with respect hereto, including copyrights. The information contained herein may not at any time be used for any unauthorized purpose, nor reproduced by or provided to any third party, without the prior written consent of quasar.

AS BUILT

Rev.	ECN Number	Date
2		
1		
0	AS BUILT	__/__/__

Drawing Name:
INSTRUMENTATION SCHEDULE

Project Name and Address:
0058-CAR-OH-11

RINGLER FARMS
ADS Facility
ecoFarmsystem 980

2277 County Road 156
Cardington, OH 43315-9742

Area:

Author: RAMII

Calculated:

Checked: RN

Sheet Number: E-11

© 2012, Quasar Energy Group, LLC. All rights reserved.

P:\SBE Projects\0058-CAR-OH-11 - Ringler Farms\BUILDING DRAWINGS\CURRENT DRAWINGS (AS BUILT)\RINGLER FARMS ELECTRICAL.dwg
11/15/2013 2:50 PM

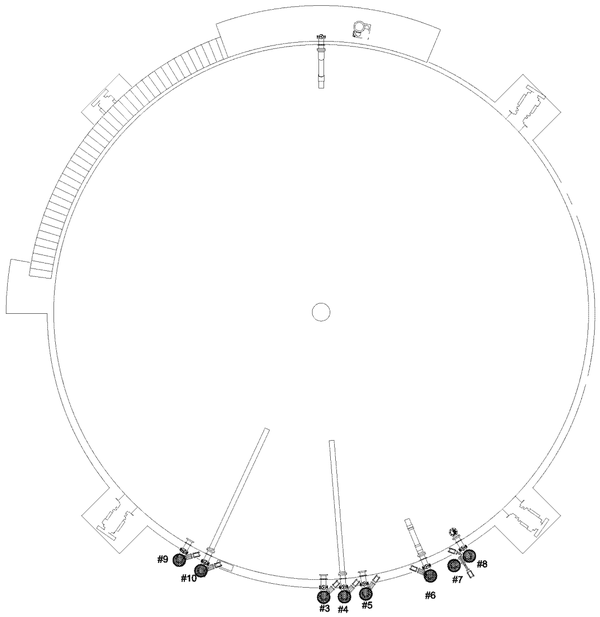

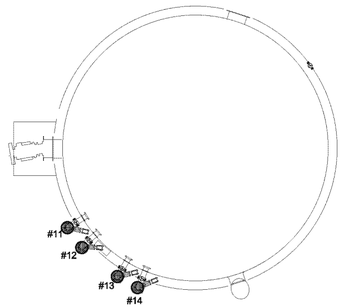

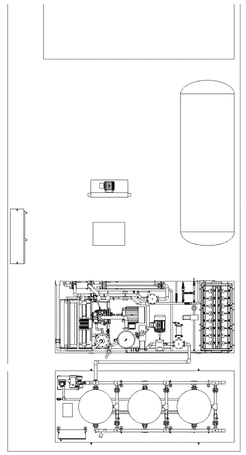

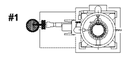

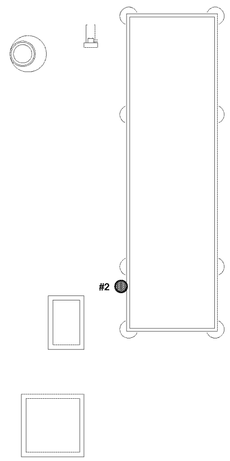

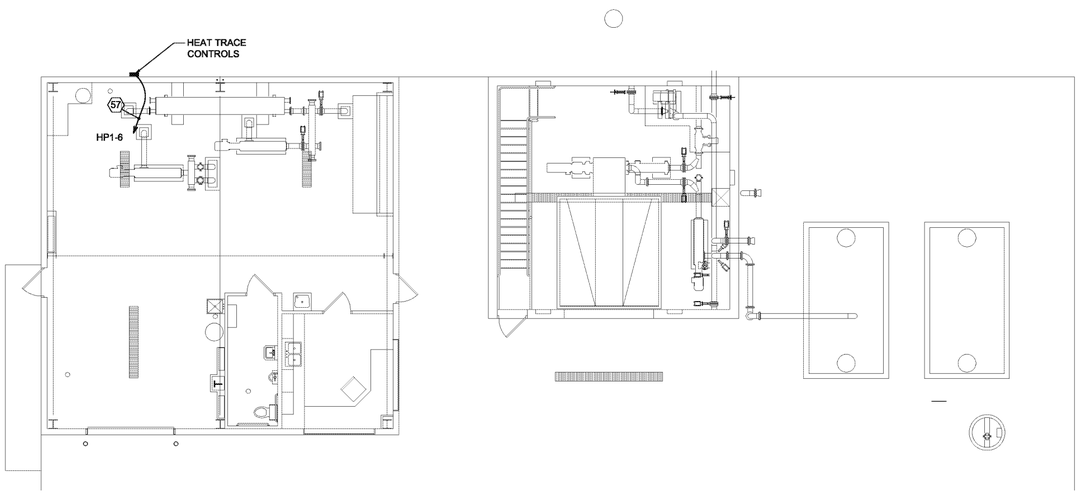

1 HEAT TRACING PLAN

SCALE: 1/8"=1'-0"

HEAT TRACE ITEMS

1. FLARE GAS PIPE - START AT 42" BELOW GRADE AND CONTINUE UP THRU FLARE FLAME ARRESTOR.
2. CHP CONDENSATE - START 42" BELOW GRADE UP TO CHP FIELD VERIFY LOCATION.
3. TANK T-002 SLUDGE LINE - START 42" BELOW GRADE TO 6" ABOVE GRADE.
4. TANK T-002 SLUDGE LINE - START 42" BELOW GRADE TO 6" ABOVE GRADE.
5. WATER LINE TO TANK T-002 - START BELOW GRADE TO 6" ABOVE GRADE
6. TANK T-002 SLUDGE LINE - START 42" BELOW GRADE TO 6" ABOVE GRADE.
7. TANK T-02 SLUDGE LINE - START 42" BELOW GRADE TO 6" ABOVE GRADE.
8. TANK T-002 SLUDGE LINE - START 42" BELOW GRADE TO 6" ABOVE GRADE.
9. TANK T-002 SLUDGE LINE - START 42" BELOW GRADE TO 6" ABOVE GRADE.
10. TANK T-001 SLUDGE LINE - START 42" BELOW GRADE TO 6" ABOVE GRADE.
11. TANK T-001 SLUDGE LINE - START 42" BELOW GRADE TO 6" ABOVE GRADE.
12. TANK T-001 SLUDGE LINE - START 42" BELOW GRADE TO 6" ABOVE GRADE.
13. TANK T-001 SLUDGE LINE - START 42" BELOW GRADE TO 6" ABOVE GRADE.
14. TANK T-001 SLUDGE LINE - START 42" BELOW GRADE TO 6" ABOVE GRADE.

quasar energy group
7624 Riverview Road
PO Box 31023
Cleveland OH 44141
Phone: 216.986.9999

Scale: SEE DETAIL

This drawing contains valuable confidential and proprietary information that belongs to quasar energy group, llc ("quasar"), and is subject to a separate Confidentiality and Nondisclosure Agreement. quasar is the author and owner of this drawing, and retains all common law, statutory and other rights and privileges with respect hereto, including copyrights. The information contained herein may not at any time be used for any unauthorized purpose, nor reproduced by or provided to any third party, without the prior written consent of quasar.

AS BUILT

Rev.	ECN Number	Date
2		
1		
0	AS BUILT	__/__/__

Drawing Name:
HEAT TRACING PLAN

Project Name and Address:
0058-CAR-OH-11

RINGLER FARMS
ADS Facility
ecoFarmsystem 980

2277 County Road 156
Cardington, OH 43315-9742

Area:

Author: RAMII

Calcurated:

Checked: RN

Sheet Number: E-12

© 2012, Quasar Energy Group, LLC. All rights reserved.

P:\SBE Projects\0058-CAR-OH-11 - Ringler Farms\BUILDING DRAWINGS\CURRENT DRAWINGS (AS BUILT)\RINGLER FARMS ELECTRICAL.dwg
11/18/2013 10:44 AM

ELECTRICAL SPECIFICATIONS

1. TEMPORARY POWER AND LIGHTING
   - A. Arrange with the General Contractor, after award of Contract, to furnish temporary electric services for the project.
   - B. No conduit or wiring installed under this Contract shall be used for temporary light or power.
   - C. There shall be at least one (1) working temporary light in each room for rooms less than 100 sq. ft. and larger rooms to be lighted to at least 1.5 watts per square foot.
   - D. Receptacle density shall be a minimum of one (1) double 20 amp duplex (120V) every 2500 sq. ft..

2. INSTALLATION
   - A. The Electrical Drawings indicated approximate locations of all equipment, outlets, etc. Do Not Scale Drawings. Ascertain exact locations and arrange work accordingly. The right is reserved to effect reasonable changes in locations of outlets up to the time of roughing-in without additional cost to the Owner. Changes in location of outlets or equipment because of interference with work of other trades shall be made only with the consent of the Architect and at no additional cost.
   - B. Review architectural drawings for specific locations of same outlets, light fixtures, etc. See reflected ceiling plans for exact location of light fixtures.
   - C. Material or labor which is not shown on the Drawings or in the Specifications, but which is obviously necessary to complete the work (and is usually included in similar work) shall be included in the installation.

3. SITE VISIT
   - A. Visit the site of work and be familiar with all conditions affecting the work. Submission of proposal shall presuppose knowledge of all such site conditions. Lack of such knowledge will not be accepted as valid excuse for granting extra compensation or for failure or neglect or refusal to perform any or all of the work of this Contract.

4. MATERIALS AND EQUIPMENT
   - A. All equipment and materials shall be new, of current manufacture and meet or exceed standards specified by UL, NEMA, ANSI and IEEE wherever such standards have been established and shall bear the Underwriter's Laboratories label. All materials of one type or of one system shall be supplied by the same manufacturer.
   - B. Equipment and material shall be protected by and be the responsibility of the Contractor until formally accepted by the Owner.
   - C. Material and equipment used as extensions to existing systems shall be of matching electrical characteristics for satisfactory operation of a complete system.

5. FIELD QUALITY CONTROL AND COORDINATION
   - A. Consult plans and specifications, field layouts and shop drawings covering work for the various other trades and plan layout of electrical work accordingly.
   - B. Keep fully informed of the progress of the general construction and install work that is to be concealed within the building construction in sufficient time to secure proper location without delay to the work of other trades.
   - C. All conduit and outlet boxes shall be concealed in masonry and/or wall construction in finished areas.
   - D. Examine the work of other trades, where their work comes in contact with or is covered by electrical work. Do not attach to, cover up, or finish against any defective work or install electrical work in a manner which will prevent proper installation of the work of other trades.
   - E. Outlets, switches and receptacles shall be centered with regard to paneling, trim equipment, etc., and shall line up with top or bottom of masonry courses.
   - F. Take all field measurements necessary and assume responsibility for their accuracy.
   - G. Architectural Drawings supersede Electrical Drawings. Determine that work of this Division can be accommodated within spaces provided. Notify General Contractor and/or Architect of any interferences before starting installation.
   - H. Determine sizes, locations for chases, openings necessary for installation of electrical work; cooperate with other trades in setting of sleeves, inserts and hangers.
   - I. Coordinate this work with all trades and serving utilities. Arrange operation so as not to delay installation or completion of any parts of interrelated work so that construction may proceed on schedule.

6. WORKMANSHIP
   - A. The installation of the electrical system(s) shall have its several component parts function as a workable system, complete with all accessories necessary for its operation. Leave equipment properly adjusted and in working order. Execute work in conformity with the best accepted standard practice so as to contribute to the efficiency of operation, maintenance, maximum accessibility, appearance and minimum cost in construction for future alterations and additions. The installation shall conform to the building structure, its equipment and usage.
   - B. Electrical work shall be installed by journeyman electricians under the direct supervision of a competent foreman at all times. Electrical work installed by apprentice electricians shall be supervised by a journeyman electrician.
   - C. Mounting heights and locations shall be verified with the Architect.

7. CUTTING AND PATCHING
   - A. All cutting and patching associated with the electrical work shall be the responsibility of the Electrical Contractor. Cutting and patching shall be avoided as far as possible. Furnish sleeves and thimbles for use in the slabs, beams, walls, etc. as they are being constructed. Where cutting cannot be avoided, it shall be done carefully so as not to injure any part of the structure and as little material as possible shall be removed. In no case shall reinforcing steel be cut.

8. CONTINUATION OF SERVICES
   - A. During construction, remodeling or relocation of facilities, it shall be necessary to keep present building in operation. It shall be the duty of the Electrical Contractor to maintain services to all areas of the buildings. The Electrical Contractor shall provide all splicing, rerouting and temporary support of cables as necessary.
   - B. Service outages, if required, shall be scheduled with the Owner one (1) week in advance and at the Owner's convenience, even if it requires the work to be performed at premium time at no extra cost to Owner.

9. PERMITS AND CODES
   - A. The Electrical Contractor shall comply with all the requirements of the National Board of Fire Underwriters and the regulations of the National Electric Code as interpreted by the local Inspection Department. The Electrical Contractor shall secure and pay for all permits and inspections required by governing authorities. All certificates shall be in duplicate and shall be delivered to the Architect and shall become the property of the Owner.

10. RACEWAYS
   - A. All wiring shall be installed in conduit unless specifically noted otherwise.
   - B. Raceways in dry locations shall be electrical metallic tubing (E.M.T.).
   - C. Conduits shall be sized as required by Code for the number of wires indicated or shall be of the sizes specifically indicated.
   - D. All conduits shall be installed concealed where construction will permit and exposed elsewhere as approved by the Architect.
   - E. Conduits shall be continuous from outlet to outlet, from outlets to cabinets, junction boxes or pull boxes and shall enter and be secured to all boxes with locknuts and bushings. Conduit ends shall be capped while exposed during construction to prevent the entrance of foreign materials and moisture.

11. CONDUCTORS
   - A. Feeder and branch circuit conductors shall have 600 volt, type THHN/THWN insulation. Wire shall be #12 unless indicated otherwise, and shall be copper.
   - B. Joints in #10 AWG and smaller wire shall be made with Minnesota Mining and Manufacturing Company insulated "Scotch Locks" or with mechanically crimped sleeves and manufactured by T & B Company or Ideal Company. Connector sleeves shall be insulated with pressure sensitive electrical tape equal to Scotch #33. Joints in #8 AWG and larger shall be made with pressure type mechanical connectors and insulated with electrical tape to 150% of the insulating value of the conductor insulation.
   - C. Circuit conductors shall be connected at panelboards as indicated on the Drawings. Panelboards shall be checked at completion of the job and, where any serious unbalance occurs, adjustments shall be made.

12. WIRING DEVICES AND OUTLET BOXES
   - A. Wiring devices shall be specification grade as manufactured by Hubbell, P&S or Bryant. Plates and devices shall match existing. Where two (2) or more devices are set at one (1) point, they shall be covered by a common plate.
   - B. Outlet boxes for wiring devices shall be 2" by 2" by 1-1/2" deep. Where number of wires requires a larger box, use 4" square by 2-1/8" deep. Provide one (1) or two (2) gang plaster covers as required, to finish flush with wall. Where three (3) or more devices are set at one (1) point, use gang type boxes.
   - C. Outlet boxes in exposed masonry walls shall be Steel City Type GW, or equal, tile wall boxes. All boxes shall be rigidly supported from the building structure independent of the conduit system.

13. LIGHTING FIXTURES AND LAMPS
   - A. Furnish and install lighting fixtures and lamps as indicated on the fixture schedule on the Drawings. Furnish and install all required hanging accessories and fittings to insure proper installation and conformance with the Code.
   - B. Fixture frames shall be grounded to the conduit system either through the hanging device or by means of a #14 green jumper.
   - C. The Electrical Contractor shall take special note of the various types of ceiling construction used throughout the building so that proper mounting arrangements are made for lighting fixtures.

14. PANELBOARD
   - A. Furnish and install panel of the dead-front, safety type. Panel shall contain bolt-on circuit breakers of the sizes and quantities as indicated.
   - B. Panelboard shall be provided with a bare, uninsulated copper ground bus brazed or bolted to the cabinet. The ground bus shall be equivalent in current carrying capacity to the incoming feeder and shall be provided with approved ground lugs to accommodate all incoming feeder ground wires.
   - C. Panelboard shall be constructed of code gauge steel with trim, door with fully concealed hinges. Directory frame and typed directory on inside of door. Panelboard construction shall conform to National Electric Code and Underwriters Laboratories, Inc. requirements and NEMA Standards. Finish shall be gray baked enamel.
   - D. Westinghouse, ITE, General Electric, Challenger or Square D circuit breakers of similar design and equal or better performance will be acceptable.
   - E. Rework existing panels as required and indicated on Drawings.

15. DISCONNECT SWITCHES
   - A. Fusible Switch Assemblies: NEMA KS 1; quick-make, quick-break, load interrupter enclosed knife switch with externally operable handle interlocked to prevent opening front cover with switch in ON position. Handle lockable in OFF position. Fuse Clips: Designed to accommodate Class R fuses.
   - B. Nonfusible Switch Assemblies: NEMA KS 1; Type HD; quick-make, quick-break, load interrupter enclosed knife switch with externally operable handle interlocked to prevent opening front cover with switch in ON position. Handle lockable in OFF position.
   - C. Enclosure: NEMA KS 1; Type 1 or 3R as indicated on Drawings, or as required based on environment used in.

PANEL 'CP2' SCHEDULE

120/240V, 1Ø, 3W — LOCATION: ROOM 100

DESCRIPTION	WATTS				WATTS	DESCRIPTION
RECEPTACLE	362	1	20A	20A 2	373	SUMP PUMP (M-048)
INTERIOR LIGHTING	157	3	20A	20A 4	2000	HEATER
EXTERIOR LIGHTIING	47	5	20A	6		
EXHAUST FAN (EF-6)	20	7	20A	20A 8	1200	COMPRESSOR
SPARE	-	9	30A	20A 10	-	SPARE
SPARE	-	11		20A 12	-	SPARE
SPARE	-	13	30A	20A 14	-	SPARE
SPARE	-	15	20A	20A 16	-	SPARE
SPARE	-	17	-	20A 18	-	SPARE
SPARE	-	19	-	20A 20	-	SPARE
TOTAL	586			20A 22	3573	TOTAL

SN

60A, 2P MCB

TOTAL CONNECTED LOAD
= 4159 VA
= 18 AMPS AT 240V, 1Ø

TO TRANSFORMER T2

PLC-2 CABINET

480V, 3Ø, 3W, MCB — LOCATION: TRANSFER PIT ENCLOSURE

DESCRIPTION	WATTS				WATTS	DESCRIPTION
CHOPPER PUMP (P-018)	18650	1	45A	2	-	SPACE
		3		4		
		5		6		
SPACE	-	7		8	-	SPACE
		9		10		
		11		12		
TOTAL	18650				-	TOTAL

GND

TOTAL CONNECTED LOAD
= 18650 VA
= 23 AMPS AT 480V, 3Ø

60A., MAIN FUSED SWITCH WITH 60 A FUSES

60

TO DP-2

quasar energy group
7624 Riverview Road
PO Box 31023
Cleveland OH 44141
Phone: 216.986.9999

Scale: NONE

This drawing contains valuable confidential and proprietary information that belongs to quasar energy group, llc ("quasar"), and is subject to a separate Confidentiality and Nondisclosure Agreement. quasar is the author and owner of this drawing, and retains all common law, statutory and other rights and privileges with respect hereto, including copyrights. The information contained herein may not at any time be used for any unauthorized purpose, nor reproduced by or provided to any third party, without the prior written consent of quasar.

AS BUILT

Rev.	ECN Number	Date
2		
1		
0	AS BUILT	__/__/__

Drawing Name:
ELECTRICAL SPECIFICATIONS

Project Name and Address:
0058-CAR-OH-11

RINGLER FARMS
ADS Facility
ecoFarmsystem 980

2277 County Road 156
Cardington, OH 43315-9742

Area:

Author: RAMII

Calculated:

Checked: RN

Sheet Number: E-13

© 2012, Quasar Energy Group, LLC. All rights reserved.

P:\SBE Projects\0058-CAR-OH-11 - Ringler Farms\BUILDING DRAWINGS\CURRENT DRAWINGS (AS BUILT)\RINGLER FARMS ELECTRICAL.dwg
11/15/2013 2:49 PM

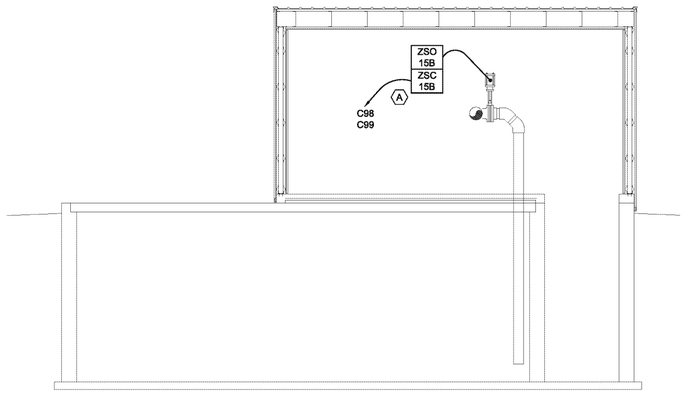

4 INSTRUMENTATATION SECTION
SCALE: 1/4"=1'-0"

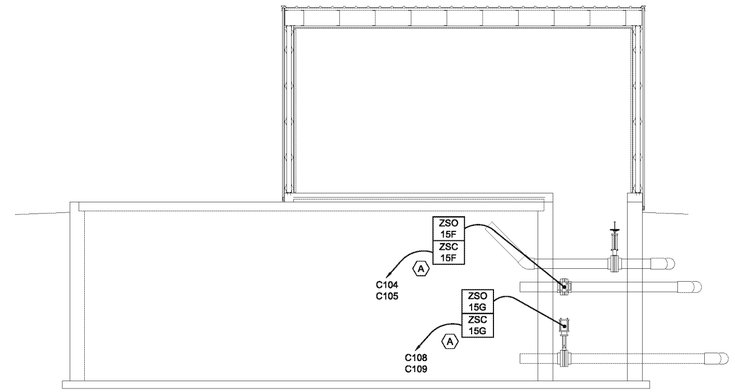

5 INSTRUMENTATION SECTION
SCALE: 1/4"=1'-0"

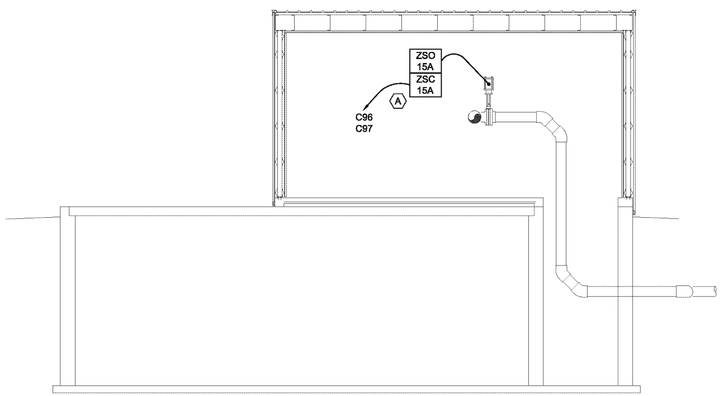

3 INSTRUMENTATION SECTION
SCALE: 1/4"=1'-0"

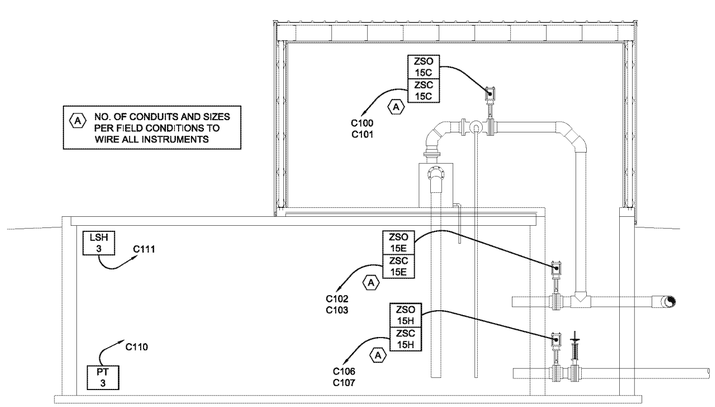

2 INSTRUMENTATION SECTION
SCALE: 1/4"=1'-0"

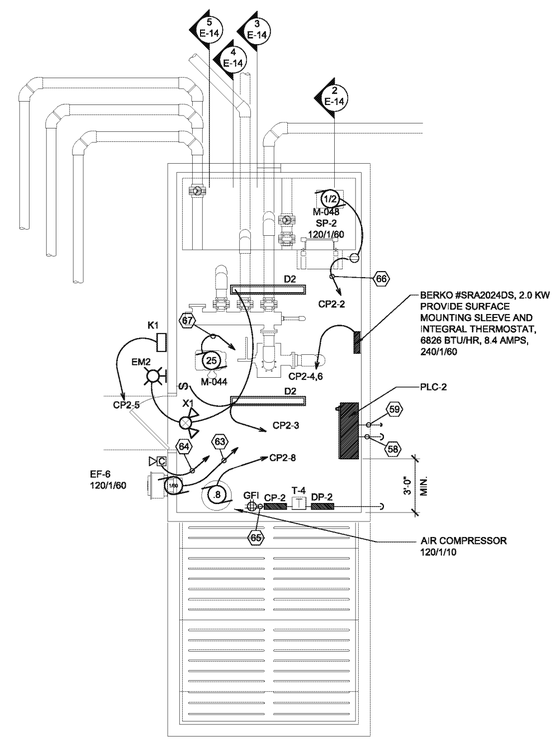

1 ELECTRICAL PLAN
SCALE: 1/4"=1'-0"

quasar energy group
7624 Riverview Road
PO Box 31023
Cleveland OH 44141
Phone: 216.986.9999

Scale: NONE

This drawing contains valuable confidential and proprietary information that belongs to quasar energy group, llc ("quasar"), and is subject to a separate Confidentiality and Nondisclosure Agreement. quasar is the author and owner of this drawing, and retains all common law, statutory and other rights and privileges with respect hereto, including copyrights. The information contained herein may not at any time be used for any unauthorized purpose, nor reproduced by or provided to any third party, without the prior written consent of quasar.

AS BUILT

Rev.	ECN Number	Date
2		
1		
0	AS BUILT	__/__/__

Drawing Name:
ELECTRICAL FOR TRANSFER TANK ENCLOSURE

Project Name and Address:
0058-CAR-OH-11

RINGLER FARMS
ADS Facility
ecoFarmsystem 980

2277 County Road 156
Cardington, OH 43315-9742

Area:

Author: RAMII

Calculated:

Checked: RN

Sheet Number: E-14

© 2012, Quasar Energy Group, LLC. All rights reserved.

P:\SBE Projects\0058-CAR-OH-11 - Ringler Farms\BUILDING DRAWINGS\CURRENT DRAWINGS (AS BUILT)\RINGLER FARMS ELECTRICAL.dwg
11/15/2013 2:48 PM