NORTHROP GRUMMAN

Transmittal

Date: March 31, 2022

To: Michael Schulman
Remedial Project Manager, Superfund Division
U.S Environmental Protection Agency Region 9
75 Hawthorne Street, SFD-7-1
San Francisco, CA 94105

From: Joshua Nandi, Environmental Project Manager
Northrop Grumman
One Space Park
Mail Stop: NGC CER-XE6D21
Redondo Beach, CA 90278

Subject/Title: Passive Sub Slab Depressurization System
Operation and Maintenance Plan
Former TRW Microwave Site, 825 Stewart Drive, Sunnyvale, CA

CC: Holly Holbrook, AECOM
Jennifer Clay, GES
Tom Wright, GES

Northrop Grumman is submitting the above-referenced

	For your review and comment
X	For your information and file
	For your approval
	For your signature

Total number of copies sent: 1

Remarks:

If you have any questions or comments regarding the enclosed report, please feel free to contact Josh Nandi at Joshua.Nandi@ngc.com.

ED_013213_00000451-00001

AECOM

Passive Sub Slab Depressurization System Operation and Maintenance Plan

Former TRW Microwave Site
825 Stewart Drive, Sunnyvale, CA

Project number: 6068027

March 31, 2022

DRAFT

Delivering a better world

Quality information

Prepared by

Holly Holbrook
AECOM Project Manager

Revision History

Revision	Revision date	Details	Authorized	Name	Position

ED_013213_00000451-00003

Prepared for:

Northrop Grumman

Prepared by:

Holly Holbrook
AECOM Project Manager
T: 714-689-7215
M: 562-577-6058
E: Holly.Holbrook@aecom.com

AECOM
999 Town and Country Road
Orange, CA 92868
aecom.com

Copyright © 2022 by AECOM

All rights reserved. No part of this copyrighted work may be reproduced, distributed, or transmitted in any form or by any means without the prior written permission of AECOM.

ED_013213_00000451-00004

Table of Contents

1. Background 5
2. Annual Inspection Protocol 5
3. References 6
Appendix A Passive SSD System Design Drawings 7

ED_013213_00000451-00005

1. Background

AECOM Technical Services Inc. (AECOM) on behalf of Northrop Grumman has prepared this Operation and Maintenance Plan (O&M Plan) for the Passive Sub-Slab Depressurization (SSD) System for the Former TRW Microwave Site in Sunnyvale, California in a response to a request from the United States Environmental Protection Agency (USEPA) which is the lead regulatory agency for the site. In a letter dated October 7, 2021, USEPA requested that Northrop Grumman prepare a work plan or technical memorandum outlining the scope of annual inspections of the SSD system (USEPA, 2021).

1.1 SSD System History

The passive SSD System was initially installed in August and September of 2014 as a proactive measure before renovation of the building. The purpose of the SSD was to mitigate potential vapor intrusion due to sub-slab concentrations of volatile organic compounds (VOCs). The sub-slab concentrations of VOCs were identified during a vapor intrusion assessment conducted in 2014 and reported in the Passive Sub-Slab Vapor Collection System Installation Work Plan (AECOM, 2014).

The major components of the SSD system consist of a series of permeable lateral vents (a combination of slotted polyvinyl chloride pipe and GeoVent™ Trenchless Gas Collection system) installed beneath the concrete slab for vapor collection, which are then connected to vertical risers that vent to the roof of the building via wind-powered roof turbines on each section of the building. A detailed description of the SSD system is documented in the Passive Sub-Slab Vapor Collection System Installation Work Plan (AECOM, 2014). The design drawings are included in **Appendix A.**

Between May 2015 and December 2015, the building conditions changed due to construction for the building tenant, Apple, Inc. (AECOM, 2016). Changes to the building included the installation of additional heating, ventilating, and air conditioning (HVAC) equipment on all three building roofs and the installation of barriers along the perimeter of the building roofs. In order to complete this work, modifications were made to the wind-powered roof turbines in each section of the building. The modifications included reducing the height of the roof turbine risers in some locations to install equipment over the top of the roof turbines.

In December 2015, AECOM performed an additional building survey and conducted vapor intrusion (VI) sampling to assess whether the VI risk had changed due to the tenant improvements. The survey included collection of three sub-slab samples, collection of nine indoor air samples, and collection of one outdoor ambient air sample, and concluded that, chemicals detected in indoor air do not pose a human health risk to current building occupants. The survey conclusion was based on the current building conditions, which included the building modifications completed for Apple (AECOM, 2016).

2. Annual Inspection Protocol

As requested by USEPA, annual inspections of the SSD System began in 2020. Inspections are limited to the accessible portions of the SSD System, located on the roof of the building. The inspections consist of:

- Visual inspections of all exposed piping/risers for cracking or other damage;
- Inspections of the seven turbines to ensure that they can spin freely; and
- Photographically document the current state of the SSD system.

Any damage or deficiencies noted during the inspection will be immediately communicated to the Northrop Grumman project manager. Documentation annual inspection of the SSD System will be included as an appendix to each Annual Groundwater Monitoring Report submitted to USEPA.

ED_013213_00000451-00006

3. References

AECOM, 2014. Passive Sub-Slab Vapor Collection System Installation Work Plan, Former TRW Microwave Facility, 825 Stewart Drive, Sunnyvale, California. August 13.

AECOM, 2016. Vapor Intrusion Evaluation Report, Former TRW Microwave Site, 825 Stewart Drive, Sunnyvale, California. February.

USEPA, 2021. Re: EPA Site Visit and Vapor Intrusion Field Assessment, 825 Stewart Avenue, Sunnyvale, CA, TRW Microwave Superfund Site (CERCLIS ID # CAD009159088).

ED_013213_00000451-00007

Appendix A
Passive SSD System Design Drawings

ED_013213_00000451-00008

Project Management Initials: Designer: J Connell|Checked:M Riley Approved:E Lang ANSI D 22" x 34"

PROJECT VICINITY MAP

Scale: NONE

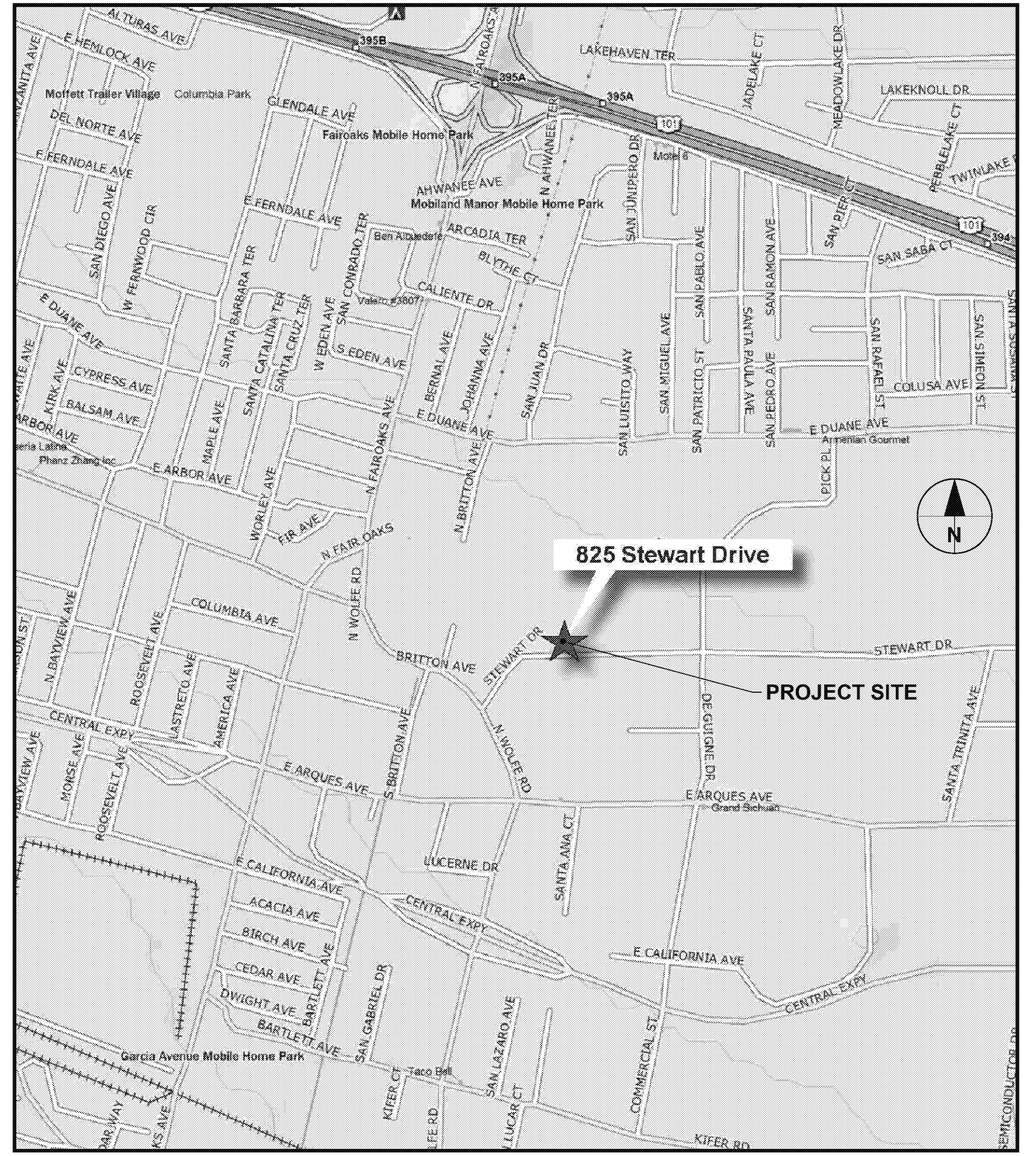

PROJECT LOCATION MAP

Scale: NONE

INDEX OF DRAWINGS

1	COVER	TITLE SHEET, VICINITY MAP, LOCATION MAP AND INDEX OF DRAWINGS
2	G-01	LEGENDS AND NOTES
3	S-01	BUILDING FLOOR PLAN
4	S-02	BUILDING ROOF PLAN
5	S-03	CONCRETE REMOVAL AND PIPE INSTALLATION PLAN - CAPTURE AREAS 1 AND 2
6	S-04	CONCRETE REMOVAL AND PIPE INSTALLATION PLAN - CAPTURE AREAS 3, 4 AND 5
7	S-05	CONCRETE REMOVAL AND PIPE INSTALLATION PLAN - CAPTURE AREAS 6 AND 7
8	S-06	INSTALLATION DETAILS

REGISTERED PROFESSIONAL ENGINEER
MARK R. RILEY
C68581
EXP. 9-30-2015
CIVIL
STATE OF CALIFORNIA

August 1, 2014

AECOM

Passive Sub-Slab Vapor Collection System
Former TRW Microwave Facility
Northrop Grumman Systems Corporation

Sunnyvale, CA

Issue for Construction - August 2014

Project No.: 60238860

Last saved by: ARMITAGED (2014-08-01) Last Plotted: 2014-08-01
Filename: H:\MICROWAVE\60238860-SHT-NGCTRW-G-CVR.DWG

STRUCTURAL NOTES

A. GENERAL

1. THE APPLICABLE BUILDING CODE IS 2013 CALIFORNIA BUILDING CODE WITH LOCAL AMENDMENTS. ALL CONSTRUCTION SHALL BE IN ACCORDANCE WITH THE BUILDING CODE.
2. ALL STRUCTURAL RELATED SHOP DRAWINGS SHALL BE SUBMITTED TO THE ENGINEER FOR REVIEW BEFORE CONSTRUCTION.
3. VERIFY ALL THE DIMENSIONS AND JOB CONDITIONS BEFORE STARTING WORK, AND NOTIFY THE ENGINEER OF ANY DISCREPANCIES.
4. SPECIAL INSPECTION SHALL BE CONDUCTED IN ACCORDANCE WITH THE REQUIREMENTS SET FORTH IN SECTION 1701 OF THE CALIFORNIA BUILDING CODE (CBC).

B. CAST-IN-PLACE CONCRETE

1. CONCRETE 28-DAY COMPRESSIVE STRENGTH SHALL BE MINIMUM 4,000 PSI.
2. ALL CONCRETE CONSTRUCTION SHALL CONFORM TO THE CALIFORNIA BUILDING CODE (CBC) AND THE ACI 318 "BUILDING CODE REQUIREMENTS FOR REINFORCED CONCRETE" INCLUDING BAR BENDS AND HOOKS.
3. CEMENT SHALL BE ASTM C150, TYPE II, LOW ALKALI.
4. CONCRETE REINFORCEMENT SHALL BE ASTM A615, GRADE 60 DEFORMED BAR. NO WELDING OF REINFORCING BARS SHALL BE PERMITTED.
5. THE EPOXY GROUT SHALL BE HILTI HIT-RE 500-SD OR APPROVED EQUAL.

LINE AND SYMBOLS LEGEND

SUB-SLAB SAMPLING LOCATION

EXISTING ITEMS

FUTURE ITEMS

SUB-SLAB VAPOR CAPTURE AREA BOUNDARY

SUB-SLAB SLOTTED VAPOR CAPTURE PIPING

SUB-SLAB SOLID VAPOR HEADER PIPING

DETAIL DESIGNATIONS

1. DETAILS ARE IDENTIFIED AS FOLLOWS:

A. 1 / M-01 — OPTIONAL DETAIL DESCRIPTION
DETAIL NUMBER
DRAWING WHERE DETAIL IS SHOWN

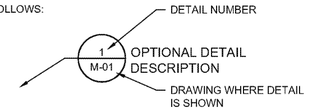

B. BY CIRCLING AREA TO BE DETAILED AND LEADERING OUT TO AN ENLARGED DETAIL OF THE CIRCLED AREA.

2. DETAILS ARE TITLED AS FOLLOWS:

DETAIL NUMBER
DRAWING WHERE DETAIL WAS TAKEN
1 / M-01 | DETAIL
Scale: 1" = 1'-0"

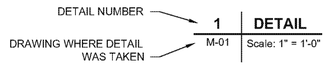

AECOM

PROJECT

Passive Sub-slab Vapor Collection System
Former TRW Microwave Facility
Sunnyvale, CA

CLIENT

Northrop Grumman Systems Corporation
Falls Church, VA

CONSULTANT

AECOM Technical Services, Inc
999 Town & Country Road
Orange, CA
714.567.2400 tel
www.aecom.com

REGISTRATION

REGISTERED PROFESSIONAL ENGINEER
MARK R. RILEY
C68581
EXP. 9-30-2015
CIVIL
STATE OF CALIFORNIA

August 1, 2014

ISSUE/REVISION

I/R	DATE	DESCRIPTION
1	AUG 2014	ISSUE FOR CONSTRUCTION

PROJECT NUMBER

60238860

SHEET TITLE

LEGENDS AND NOTES

DWG NUMBER G-01

SHEET NUMBER 2 of 8

Project Management Initials: Designer: R Riley Checked: A Rees Approved: E Lang ANSI D 22" x 34"
Last saved by: ARMITAGED (2014-08-01) Last Plotted: 2014-08-01
Filename: H:\MICROWAVE#2\60238860-SHT-NGCTRW-G-01.DWG

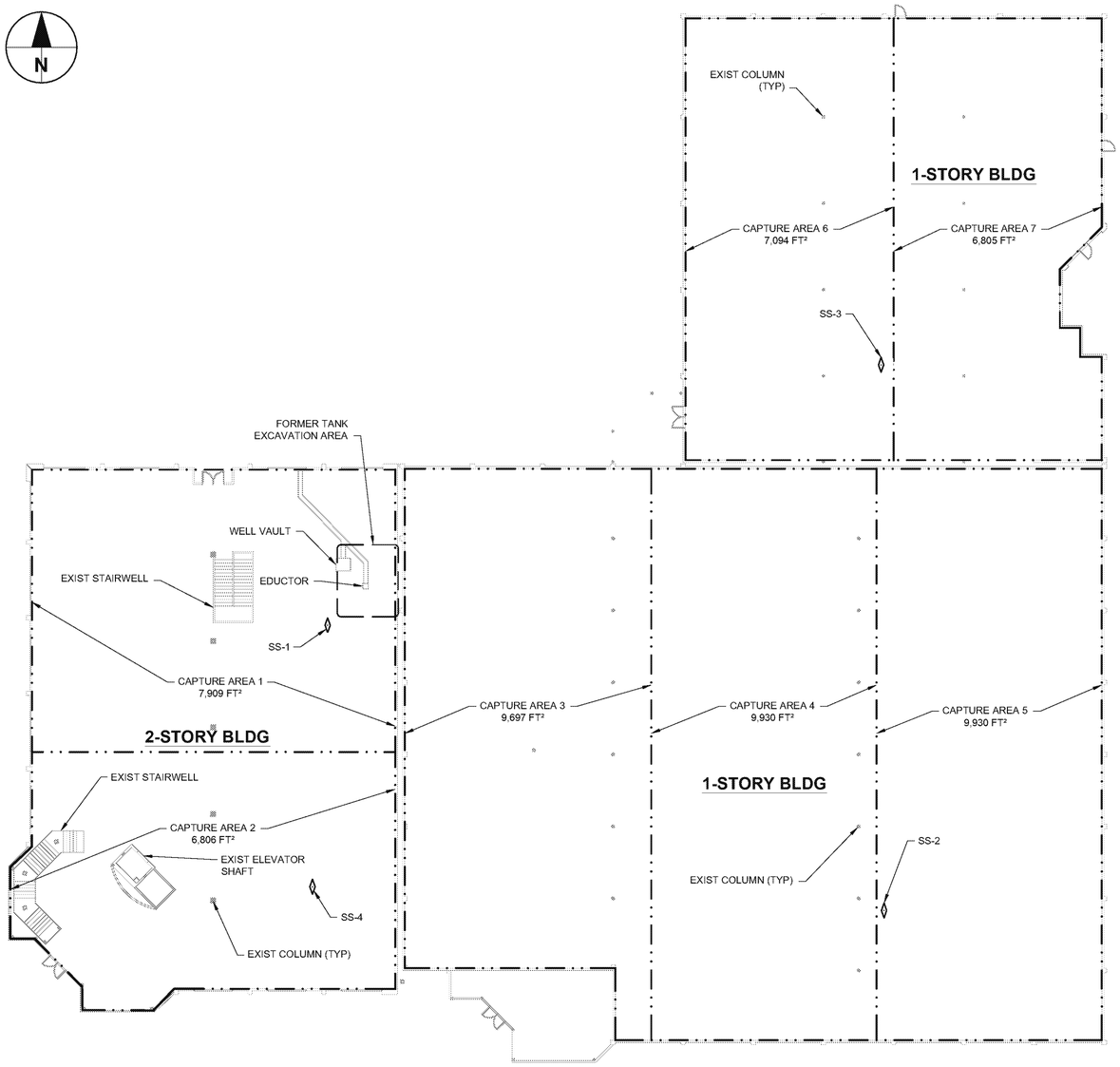

GROUND FLOOR PLAN

Scale: 1" = 20'-0"

0 20' 40'

AECOM

PROJECT

Passive Sub-slab Vapor Collection System
Former TRW Microwave Facility
Sunnyvale, CA

CLIENT

Northrop Grumman Systems Corporation
Falls Church, VA

CONSULTANT

AECOM Technical Services, Inc
999 Town & Country Road
Orange, CA
714.567.2400 tel
www.aecom.com

REGISTRATION

REGISTERED PROFESSIONAL ENGINEER
C68581
EXP. 9-30-2015
CIVIL
STATE OF CALIFORNIA

August 1, 2014

ISSUE/REVISION

I/R	DATE	DESCRIPTION
1	AUG 2014	ISSUE FOR CONSTRUCTION

PROJECT NUMBER

60238860

SHEET TITLE

BUILDING FLOOR PLAN

DWG NUMBER S-01

SHEET NUMBER 3 of 8

Project Management Initials: Designer: E Lang Checked: A Rees Approved: E Lang ANSI D 22" x 34"

Last saved by: ARMITAGED(2014-08-01) Last Plotted: 2014-08-01
Filename: H:\MICROWAVE\#2\60238860-SHT-NGCTRW-S-01.DWG

ED_013213_00000451-00011

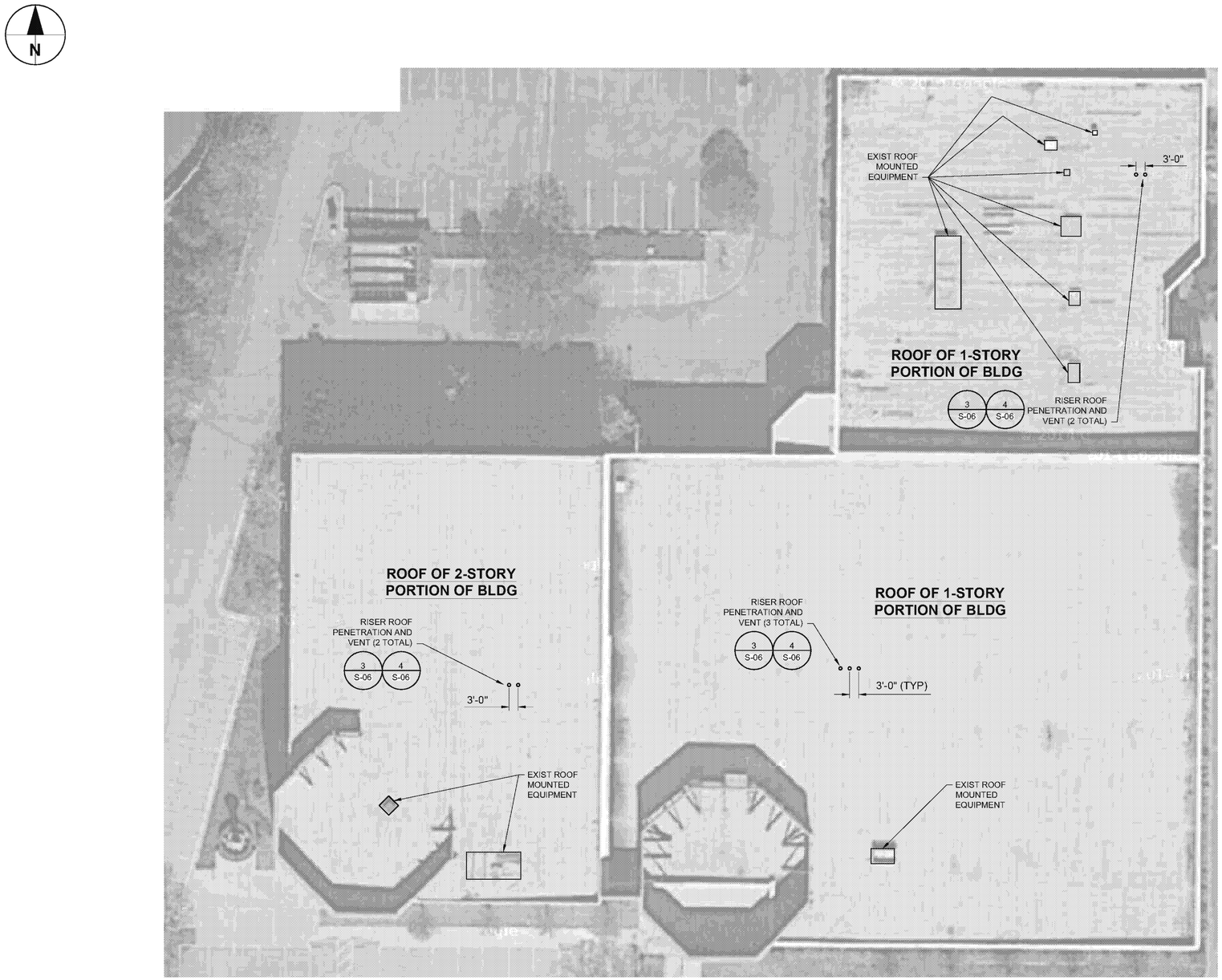

ROOF PLAN

Scale: 1" = 20'-0"

0 20' 40'

GENERAL NOTES:

1. BUILDING PLANS ARE TAKEN FROM RECORD DOCUMENTS AND MAY NOT REFLECT EXISTING CONDITIONS. CONTRACTOR SHALL FIELD VERIFY EXISTING CONDITIONS PRIOR TO ANY EXCAVATION.

AECOM

PROJECT

Passive Sub-slab Vapor Collection System
Former TRW Microwave Facility
Sunnyvale, CA

CLIENT

Northrop Grumman Systems Corporation
Falls Church, VA

CONSULTANT

AECOM Technical Services, Inc
999 Town & Country Road
Orange, CA
714.567.2400 tel
www.aecom.com

REGISTRATION

REGISTERED PROFESSIONAL ENGINEER
MARK R. RILEY
C68581
EXP. 9-30-2015
CIVIL
STATE OF CALIFORNIA

August 1, 2014

ISSUE/REVISION

I/R	DATE	DESCRIPTION
1	AUG 2014	ISSUE FOR CONSTRUCTION

PROJECT NUMBER

60238860

SHEET TITLE

BUILDING ROOF PLAN

DWG NUMBER S-02

SHEET NUMBER 4 of 8

Project Management Initials: Designer: E Lang Checked: A Rees Approved: E Lang ANSI D 22" x 34"

Last saved by: ARMITAGED (2014-08-01) Last Plotted: 2014-08-01
Filename: H:\MICROWAVE\#2\60238860-SHT-NGCTRW-S-02.DWG

ED_013213_00000451-00012

Project Management Initials: Designer: E Lang Checked: A Rees Approved: E Lang ANSI D 22" x 34"

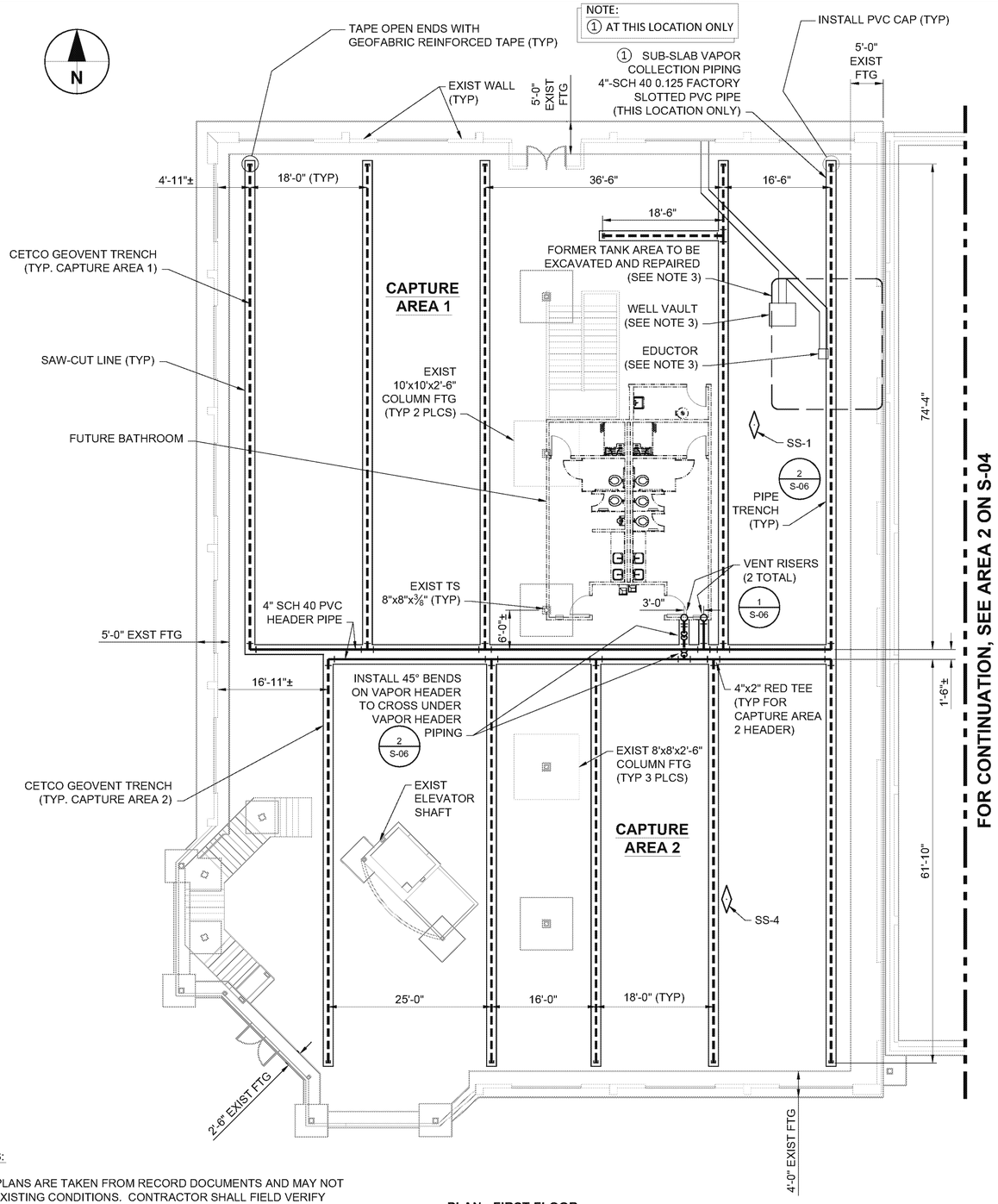

PLAN - FIRST FLOOR

Scale: 1" = 10'

0 10' 20'

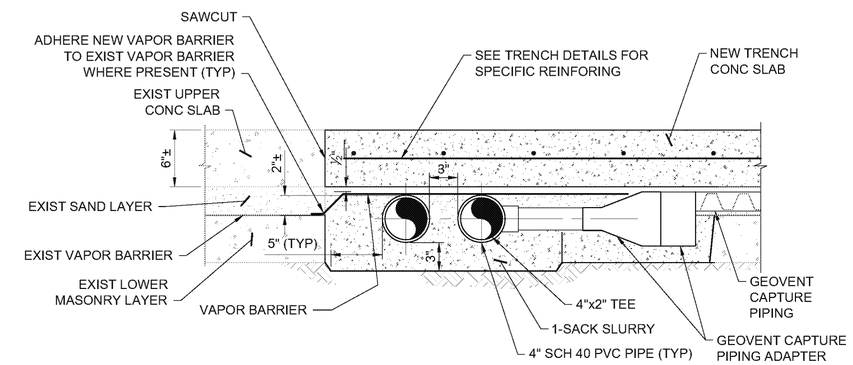

VAPOR HEADER CONNECTION WITH ALTERNATE GEOVENT CAPTURE PIPING

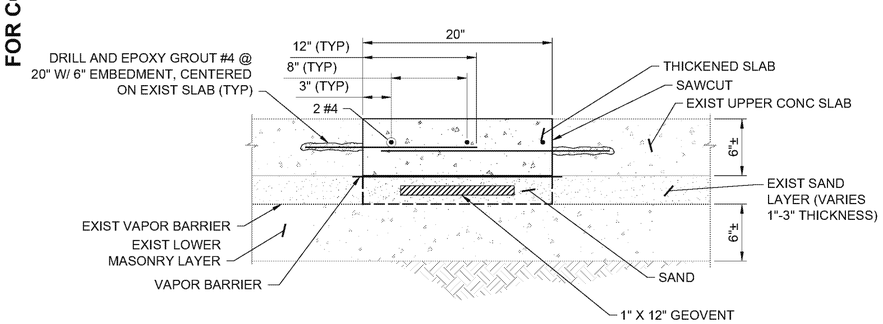

TRENCHING FOR 2" SLOTTED VAPOR CAPTURE PIPING

PIPE TRENCH AT LOCATIONS WITH 2 SLAB LAYERS

Scale: 1 1/2" = 1'-0"

0 1' 2'

GENERAL NOTES:

1. BUILDING PLANS ARE TAKEN FROM RECORD DOCUMENTS AND MAY NOT REFLECT EXISTING CONDITIONS. CONTRACTOR SHALL FIELD VERIFY EXISTING CONDITIONS PRIOR TO ANY EXCAVATION.
2. TRENCH LOCATIONS AND SEPARATIONS ARE APPROXIMATE. CONTRACTOR SHALL INSTALL TRENCHES MAINTAINING A MINIMUM DISTANCE TO AVOID BUILDING FOOTINGS AND THICKENED SLAB END AREAS UNDER THE SUPERVISION AND APPROVAL OF THE PROJECT ENGINEER.
3. TO BE REMOVED BY OTHERS PRIOR TO THIS CONTRACT AND COORDINATED WITH THE INSTALLATION OF THE PASSIVE SUB-SLAB VAPOR COLLECTION SYSTEM.

Last saved by: ARMITAGED (2014-08-01) Last Plotted: 2014-08-01
Filename: H:\MICROWAVE\60238860-SHT-NGC-TRW-S-03-REV ADDL CONC.DWG

AECOM

PROJECT

Passive Sub-slab Vapor Collection System
Former TRW Microwave Facility
Sunnyvale, CA

CLIENT

Northrop Grumman Systems Corporation
Falls Church, VA

CONSULTANT

AECOM Technical Services, Inc
999 Town & Country Road
Orange, CA
714.567.2400 tel
www.aecom.com

REGISTRATION

REGISTERED PROFESSIONAL ENGINEER
ANDREW R. RIES
C68581
EXP. 9-30-2015
CIVIL
STATE OF CALIFORNIA

August 1, 2014

ISSUE/REVISION

I/R	DATE	DESCRIPTION
1	AUG 2014	ISSUE FOR CONSTRUCTION

PROJECT NUMBER

60238860

SHEET TITLE

CONCRETE REMOVAL AND PIPE INSTALLATION PLAN
CAPTURE AREAS 1 AND 2

DWG NUMBER **SHEET NUMBER**

S-03 5 of 8

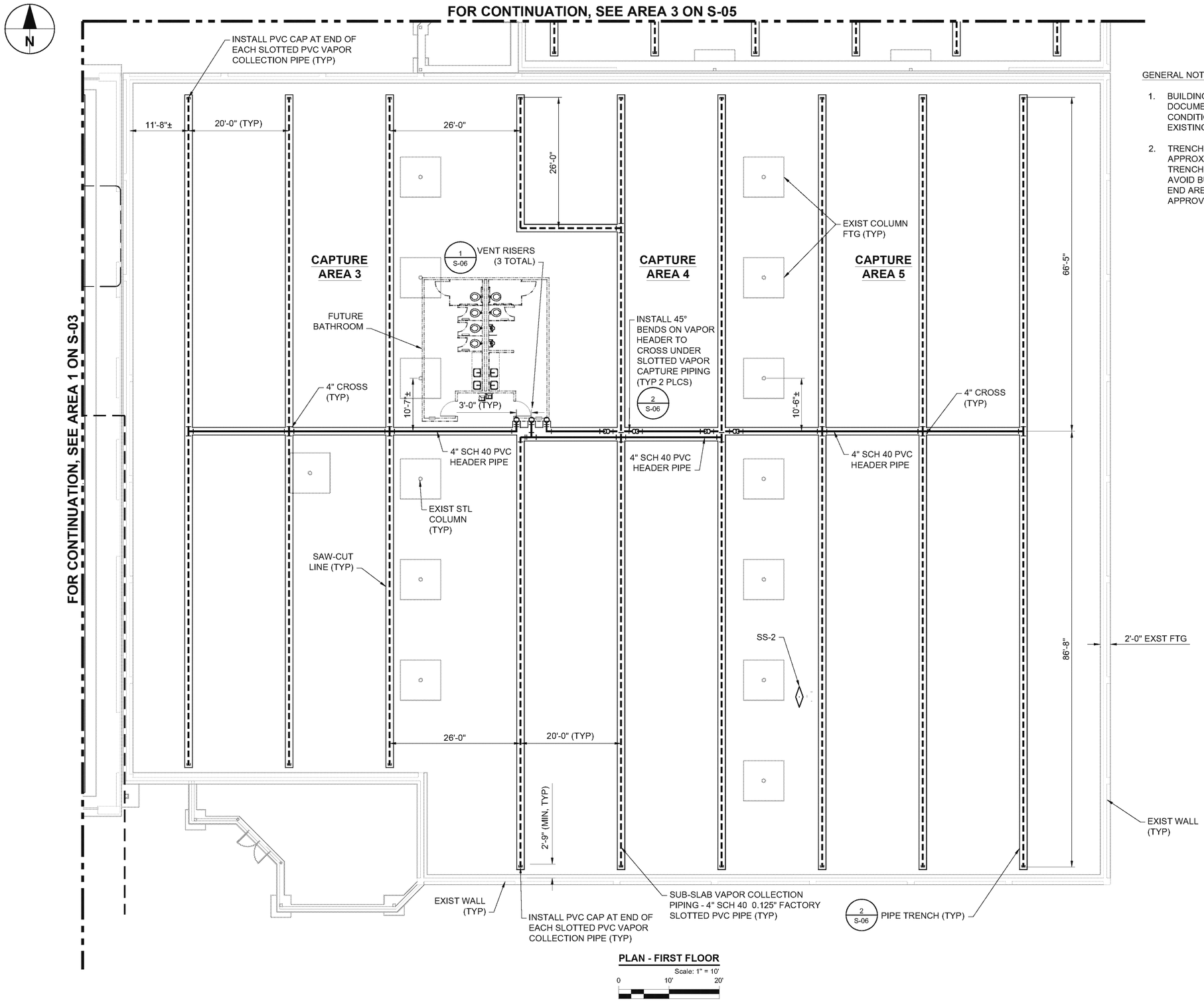

PLAN - FIRST FLOOR

Scale: 1" = 10'

0 10' 20'

GENERAL NOTES:

1. BUILDING PLANS ARE TAKEN FROM RECORD DOCUMENTS AND MAY NOT REFLECT EXISTING CONDITIONS. CONTRACTOR SHALL FIELD VERIFY EXISTING CONDITIONS PRIOR TO ANY EXCAVATION.
2. TRENCH LOCATIONS AND SEPARATIONS ARE APPROXIMATE. CONTRACTOR SHALL INSTALL TRENCHES MAINTAINING A MINIMUM DISTANCE TO AVOID BUILDING FOOTINGS AND THICKENED SLAB END AREAS UNDER THE SUPERVISION AND APPROVAL OF THE PROJECT ENGINEER.

AECOM

PROJECT

Passive Sub-slab Vapor Collection System
Former TRW Microwave Facility
Sunnyvale, CA

CLIENT

Northrop Grumman Systems Corporation
Falls Church, VA

CONSULTANT

AECOM Technical Services, Inc
999 Town & Country Road
Orange, CA
714.567.2400 tel
www.aecom.com

REGISTRATION

REGISTERED PROFESSIONAL ENGINEER
C68581
EXP. 9-30-2015
CIVIL
STATE OF CALIFORNIA

August 1, 2014

ISSUE/REVISION

I/R	DATE	DESCRIPTION
1	AUG 2014	ISSUE FOR CONSTRUCTION

PROJECT NUMBER

60238860

SHEET TITLE

CONCRETE REMOVAL AND PIPE INSTALLATION PLAN
CAPTURE AREAS 3, 4 AND 5

DWG NUMBER S-04

SHEET NUMBER 6 of 8

Project Management Initials: Designer: E Lang Checked: A Rees Approved: E Lang ANSI D 22" x 34"

Last saved by: ARMITAGED (2014-08-01) Last Plotted: 2014-08-01
Filename: H:\MICROWAVE#2\60238860-SHT-NGCTRW-S-04.DWG

ED_013213_00000451-00014

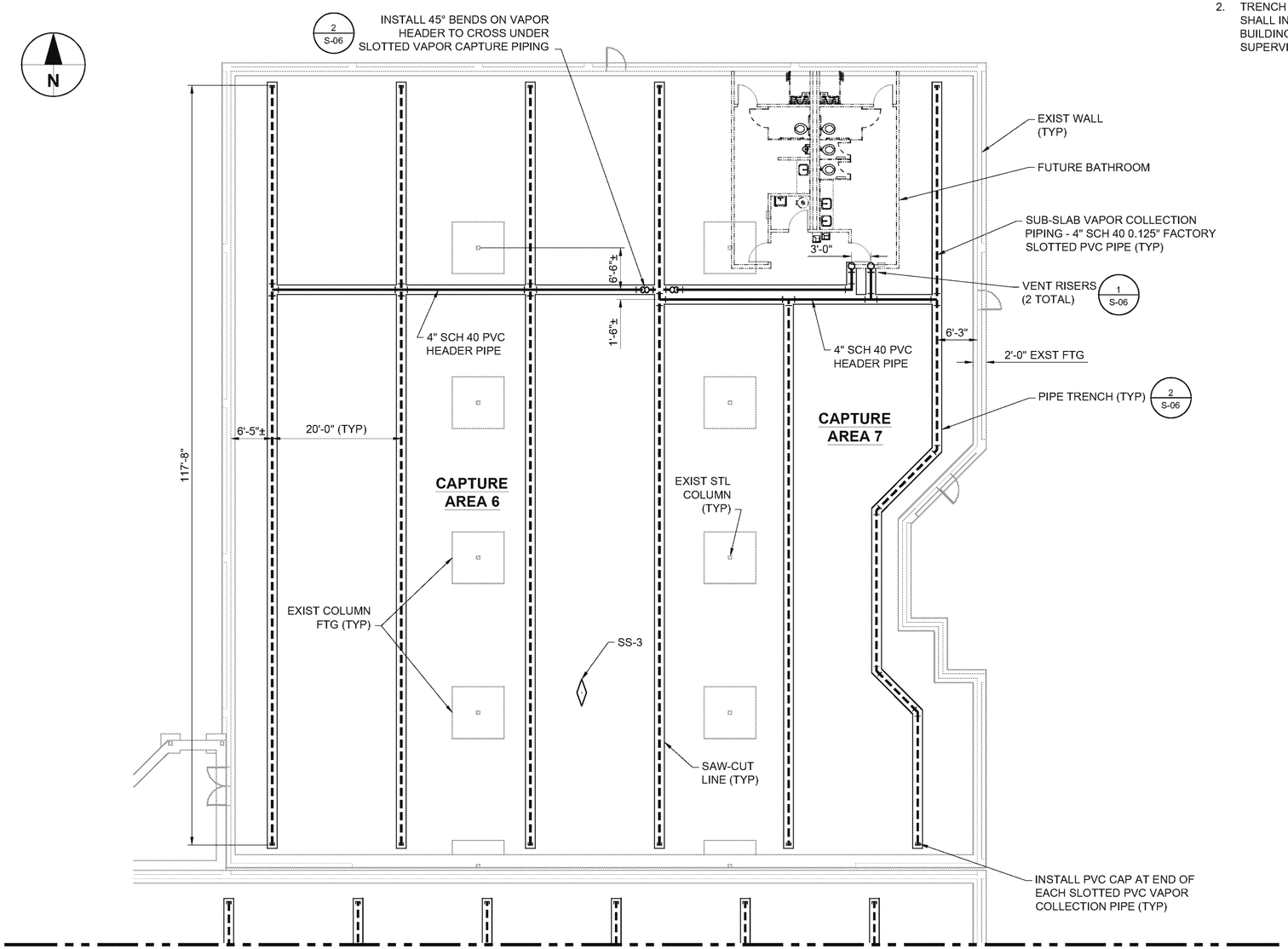

FOR CONTINUATION, SEE AREA 2 ON S-04

PLAN - FIRST FLOOR

Scale: 1" = 10'

0 10' 20'

GENERAL NOTES:

1. BUILDING PLANS ARE TAKEN FROM RECORD DOCUMENTS AND MAY NOT REFLECT EXISTING CONDITIONS. CONTRACTOR SHALL FIELD VERIFY EXISTING CONDITIONS PRIOR TO ANY EXCAVATION.
2. TRENCH LOCATIONS AND SEPARATIONS ARE APPROXIMATE. CONTRACTOR SHALL INSTALL TRENCHES MAINTAINING A MINIMUM DISTANCE TO AVOID BUILDING FOOTINGS AND THICKENED SLAB END AREAS UNDER THE SUPERVISION AND APPROVAL OF THE PROJECT ENGINEER.

AECOM

PROJECT

Passive Sub-slab Vapor Collection System
Former TRW Microwave Facility
Sunnyvale, CA

CLIENT

Northrop Grumman Systems Corporation
Falls Church, VA

CONSULTANT

AECOM Technical Services, Inc
999 Town & Country Road
Orange, CA
714.567.2400 tel
www.aecom.com

REGISTRATION

REGISTERED PROFESSIONAL ENGINEER
MARK R. RILEY
C68581
EXP. 9-30-2015
CIVIL
STATE OF CALIFORNIA

August 1, 2014

ISSUE/REVISION

I/R	DATE	DESCRIPTION
1	AUG 2014	ISSUE FOR CONSTRUCTION

PROJECT NUMBER

60238860

SHEET TITLE

CONCRETE REMOVAL AND PIPE INSTALLATION PLAN
CAPTURE AREAS 6 AND 7

DWG NUMBER S-05

SHEET NUMBER 7 of 8

Project Management Initials: Designer: E Lang Checked: A Rees Approved: E Lang ANSI D 22" x 34"

Last saved by: ARMITAGED (2014-08-01) Last Plotted: 2014-08-01
Filename: H:\MICROWAVE\2\60238860-SHT-NGCTRW-S-05.DWG

ED_013213_00000451-00015

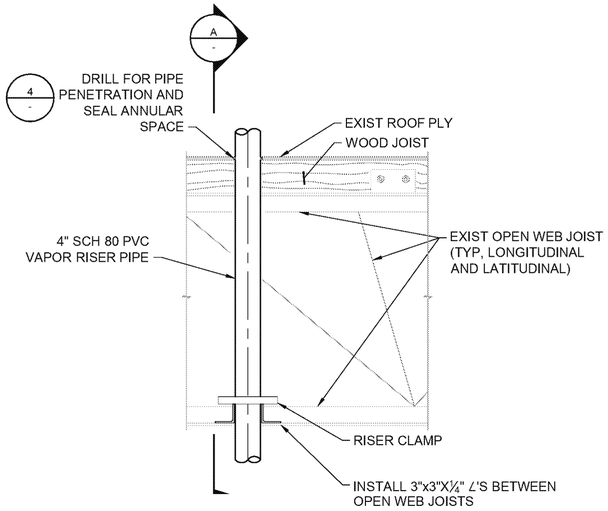

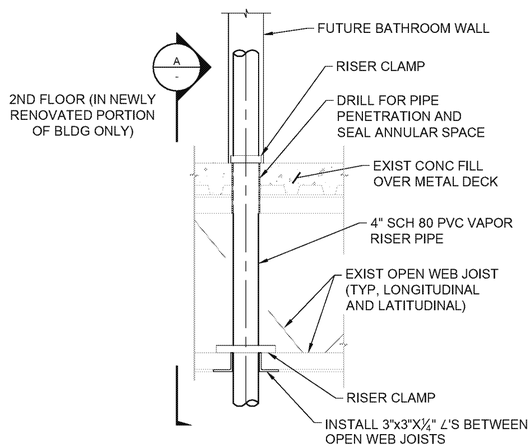

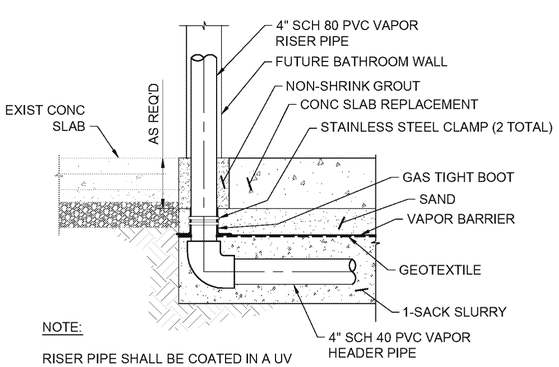

NOTE:

RISER PIPE SHALL BE COATED IN A UV RESISTANCE EPOXY PAINT.

1 | TYPICAL VENT RISER

S-03, S-04, S-05 — Scale: 1" = 1'-0"

0 1' 2'

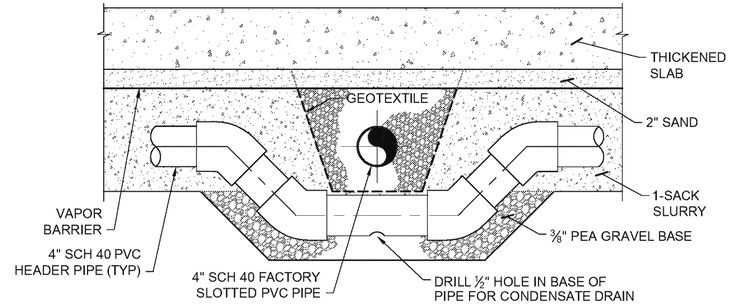

PIPE HEADER CROSSING UNDER SLOTTED VAPOR CAPTURE PIPE

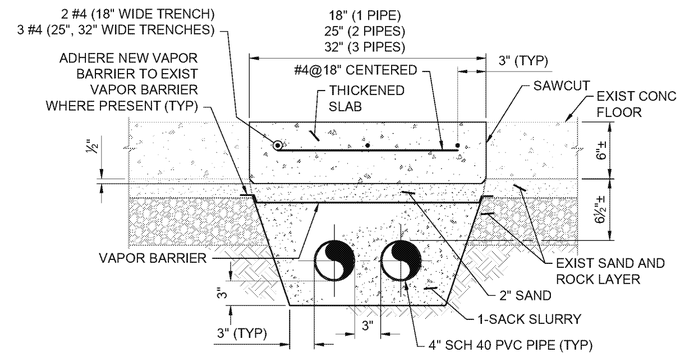

TRENCHING FOR VAPOR HEADER PIPING (UP TO 3 PIPES)

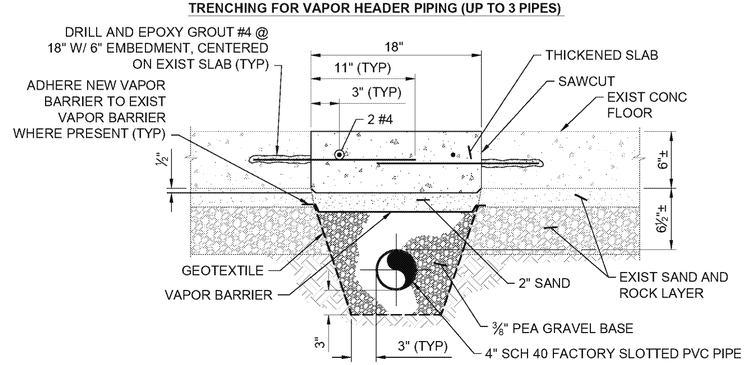

TRENCHING FOR SLOTTED VAPOR CAPTURE PIPING

2 | TYPICAL TRENCHING AND BACKFILL

S-03, S-04, S-05 — Scale: 1 1/2" = 1'-0"

0 1' 2'

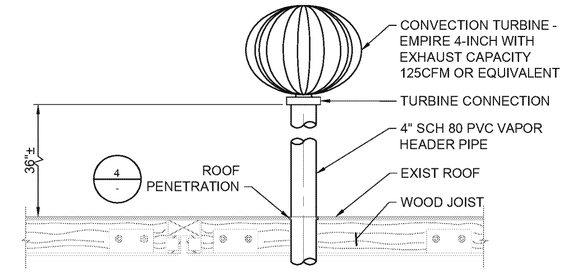

3 | TYPICAL VENT

S-02 — Scale: NONE

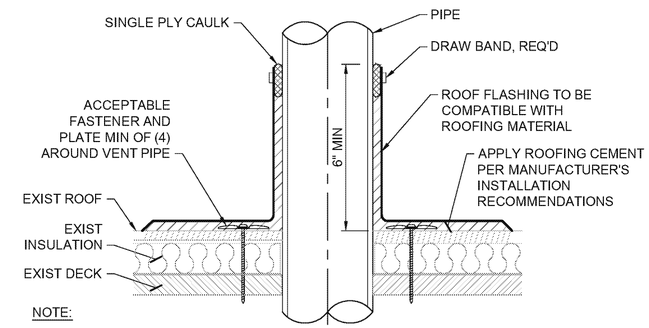

NOTE:

DETAIL TO BE USED IN CONJUNCTION WITH GUIDE SPECIFICATIONS CONTAINING REQUIREMENTS FOR NAILERS, INSULATION, ETC.

4 | ROOF PENETRATION

– / S-02 — Scale: NONE

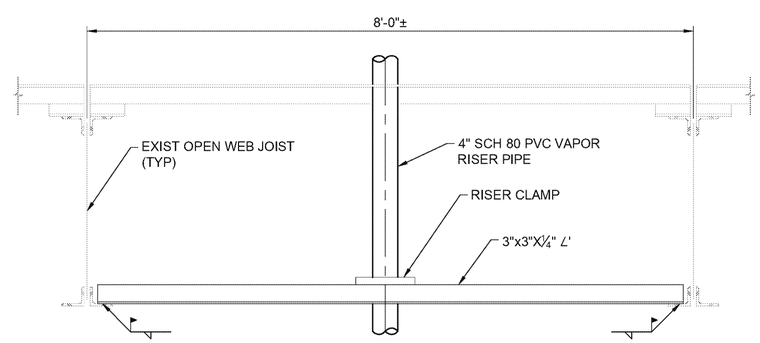

A | SECTION

– — Scale: 1" = 1'-0"

0 1' 2'

AECOM

PROJECT

Passive Sub-slab Vapor Collection System
Former TRW Microwave Facility
Sunnyvale, CA

CLIENT

Northrop Grumman Systems Corporation
Falls Church, VA

CONSULTANT

AECOM Technical Services, Inc
999 Town & Country Road
Orange, CA
714.567.2400 tel
www.aecom.com

REGISTRATION

REGISTERED PROFESSIONAL ENGINEER
ERIK R. FULLER
C68581
EXP: 9-30-2015
CIVIL
STATE OF CALIFORNIA

August 1, 2014

ISSUE/REVISION

I/R	DATE	DESCRIPTION
1	AUG 2014	ISSUE FOR CONSTRUCTION

PROJECT NUMBER

60238860

SHEET TITLE

INSTALLATION DETAILS

DWG NUMBER	SHEET NUMBER
S-06	8 of 8

Project Management Initials: Designer: E Lang Checked: A Rees Approved: E Lang ANSI D 22" x 34"

Last saved by: ARMITAGED (2014-08-01) Last Plotted: 2014-08-01
Filename: H:\MICROWAVE\#26023886O-SHT-NGCTRW-S-06.DWG

ED_013213_00000451-00016