March 31, 2016

U.S. Environmental Protection Agency, Region 9
Water Enforcement Section II
75 Hawthorne Street (ENF 3-2)
San Francisco, CA 94105-3901

Attention: Juliet Hannafin

Subject: Submittal of the Final Sediment Sampling and Analysis Plan
Sims Group USA Corporation, Redwood City, California

Dear Ms. Hannafin:

On behalf of Sims Group USA Corporation (Sims), Terraphase Engineering Inc. (Terraphase) is pleased to submit the attached *Final Sediment Sampling and Analysis Plan and Quality Assurance Project Plan* (Final SSAP), including the required Quality Assurance Project Plan (QAPP), collectively referred to as the Final SSAP/QAPP. The Final SSAP/QAPP has been prepared in accordance with Section 5, Paragraph 12 of the Consent Decree between the United States of America, on behalf of the United States Environmental Protection Agency ("the EPA"), and Sims, filed on September 18, 2014.

The EPA provided comments on draft versions of the SSAP/QAPP, dated March 1, 2015, and January 22, 2016. The Final SSAP/QAPP addresses EPA comments presented in comment letters dated October 8, 2015 and March 17, 2016, and during in-person meetings between EPA, Sims, and Terraphase representatives on December 14, 2015 and March 8, 2016.

Per the EPA's request, the entire sediment cores and the grab sediment samples will be described and photographed in the field. The unused portions of the soil cores will be archived for six months. Each of the grab sediment samples will be homogenized prior to sub-sampling for lab analysis and splitting with the EPA. The subsample for lab analysis will have a minimum volume of approximately 16 ounces. The lab will use a small fraction of this volume for analysis. The remaining sample will be archived at the analytical lab for six months.

If you have any questions or need additional information, please contact Peter Zawislanski at peter.zawislanski@terraphase.com or 510-645-1858.

For Terraphase Engineering Inc.

P Zawislanski

Peter Zawislanski, PG, CHG
Principal Hydrogeologist

Enclosure: *Final Sediment Sampling and Analysis Plan and Quality Assurance Project Plan, the Sims Group USA Corporation, Redwood City, California*

cc:
Melisa Cohen, Sims Metal Management
Steven Shinn, Sims Metal Management
Margaret Rosegay, Esq., Pillsbury Winthrop Shaw Pittman



ED_013190_00000184-00002

# FINAL
# SEDIMENT SAMPLING AND ANALYSIS PLAN AND QUALITY ASSURANCE PROJECT PLAN SIMS GROUP USA CORPORATION REDWOOD CITY, CALIFORNIA

*Prepared for*

Sims Group USA Corporation
699 Seaport Boulevard
Redwood City, California

*Prepared by*

Terraphase Engineering Inc.
1404 Franklin Street, Suite 600
Oakland, California

March 31, 2016

Project Number 0012.001.006

terraphase engineering

*THIS PAGE LEFT INTENTIONALLY BLANK*

# CONTENTS

**ACRONYMS AND ABBREVIATIONS ..... IV**

**CERTIFICATION ..... VI**

**1.0 PROJECT MANAGEMENT ..... 1**

1.1 Project Overview ..... 1
1.2 Project Organization ..... 2
1.3 Distribution List ..... 3
1.4 Project Background and Objectives ..... 4
1.4.1 Facility Description ..... 4
1.4.2 Project Area ..... 5
1.4.3 Project Approach ..... 5
1.4.4 Project Objectives ..... 5
1.5 Project/Task Description and Schedule ..... 6
1.5.1 Work Tasks and Products ..... 6
1.5.2 Project Schedule ..... 6
1.6 Quality Objectives and Performance Criteria ..... 7
1.7 Documents and Records ..... 7

**2.0 DATA GENERATION AND ACQUISITION ..... 9**

2.1 Sampling Process Design ..... 9
2.1.1 Potentially Affected Sediments ..... 9
2.1.2 Redwood Creek Background Concentrations ..... 10
2.1.3 Calculation of Minimum Sample Number ..... 10
2.1.4 Post-Sampling Data Analysis ..... 10
2.2 Preparatory Activities ..... 11
2.2.1 Health and Safety ..... 11
2.2.2 Special Training/Certification ..... 11
2.2.3 Underground Service Alert ..... 12
2.2.4 Permitting and Notifications ..... 12
2.3 Sampling Methods ..... 13
2.3.1 Sediment Sample Collection ..... 13
2.3.2 Decontamination Procedures ..... 16
2.3.3 Investigation-Derived Waste Handling ..... 16
2.3.4 Sampling Summary ..... 17
2.4 Sample Handling and Custody ..... 17
2.4.1 Sample Labeling and Identification ..... 17
2.4.2 Chain-of-Custody/Analysis Request Forms ..... 17
2.4.3 Sample Packaging and Shipment ..... 18
2.5 Analytical Methods, Screening Levels, and Reporting Limits ..... 19
2.5.1 Chemical Analyses ..... 19



ED_013190_00000184-00005

2.5.2 Analytical Method Limits ....19
2.5.3 Assignment of Numbers to Non-detected Values and Summation of PCBs for Calculation of Total PCBs ....20
2.6 Quality Control ....20
2.6.1 Field Quality Control Samples ....21
2.6.2 Laboratory Quality Control Samples ....22
2.6.3 Analytical Data Quality Indicators ....23
2.7 Equipment Maintenance ....25
2.8 Instrument Calibration ....26
2.8.1 Laboratory Instruments ....26
2.8.2 Standard Solutions ....26
2.9 Data Management ....26
2.9.1 Data Reduction ....26
2.9.2 Laboratory Data Deliverables ....27
2.9.3 Data Management Plan ....27

**3.0 ASSESSMENT AND OVERSIGHT ....29**

3.1 Assessments and Response Actions ....29
3.1.1 Assessments ....29
3.1.2 Response Actions ....29
3.2 Reports to Management ....30

**4.0 DATA VALIDATION AND USABILITY ....31**

4.1 Procedures for Data Validation ....31
4.2 Data Qualifiers ....31
4.3 Data Review and Reconciliation with User Requirements ....31

**5.0 REFERENCES ....33**

**TABLES**

1 Sample Matrix
2 Analytical Laboratory Methods, Sample Requirements, and Reporting Limits

**FIGURES**

1 Site Location
2 Site Plan
3 Proposed Wharf 3 Sediment Sample Locations
4 Proposed Background Sediment Sample Locations, Wharf 2
5 Proposed Background Sediment Sample Locations, Wharf 4
6 Proposed Background Sediment Sample Locations, Wharf 5



ED_013190_00000184-00006

## APPENDICES

A Consent Decree
B Standard Operating Procedures
C Field Forms



ED_013190_00000184-00007

# ACRONYMS AND ABBREVIATIONS

| | |
|---|---|
| ANOVA | analysis of variance |
| BCDC | San Francisco Bay Conservation and Development Commission |
| bss | below sediment surface |
| CAM | California Administration Manual |
| CDFG | California Department of Fish and Game |
| COC | chain-of-custody |
| COI | constituent of interest |
| DQO | data quality objective |
| DTSC | Department of Toxic Substances Control |
| EPA | Environmental Protection Agency |
| the Facility | Sims' metal recycling facility at the Port of Redwood City, San Mateo County, California |
| GPS | Global Positioning System |
| HASP | Health and Safety Plan |
| HAZWOPER | Hazardous Waste Operations and Emergency Response |
| IDW | investigation-derived waste |
| LCS | laboratory control sample |
| MDL | method detection limit |
| MQL | method quantitation limit |
| MRL | method reporting limit |
| OSHA | Occupational Safety and Health Administration |
| PCB | polychlorinated biphenyl |
| the Port | Port of Redwood City |
| QA | quality assurance |
| QC | quality control |
| %R | percent recovery |
| RPD | relative percent difference |
| Sims | Sims Group USA Corporation |
| SSAP/QAPP | Sediment Sampling and Analysis Plan and Quality Assurance Project Plan |



ED_013190_00000184-00008

| | |
|---|---|
| SOP | standard operating procedure |
| Port | Port of Redwood City |
| the Project | implementation of the SSAP/QAPP |
| Terraphase | Terraphase Engineering Inc. |
| TPH | total petroleum hydrocarbons |
| TWIC | Transportation Worker Identification Credential |
| UCL | upper confidence limit |
| USA | Underground Service Alert |
| USACE | United States Army Corps of Engineers |
| Water Board | Regional Water Quality Control Board |



ED_013190_00000184-00009

# CERTIFICATION

All geologic information, conclusions, and recommendations in this document have been prepared by a California Professional Geologist.

March 31, 2016

Peter Zawislanski, PG, CHG — Date
Principal Hydrogeologist

March 31, 2016

Jeff Wallace, PG — Date
Principal Geologist



ED_013190_00000184-00010

# 1.0 PROJECT MANAGEMENT

## 1.1 Project Overview

In accordance with Paragraph 12 of the Consent Decree between the United States Environmental Protection Agency (EPA) and Sims Group USA Corporation (Sims), Case 3:14-cv-04209, effective December 1, 2014 ("the Consent Decree;" Appendix A), Sims submitted, on March 1, 2015, for EPA's review and approval a Draft Sediment Sampling and Analysis Plan (SSAP) to characterize the marine sediment within a portion of Redwood Creek to determine if the shared-use area underneath and proximate to Sims' ship-loading conveyor ("the Conveyor") located at Wharf 3 at the Port of Redwood City ("the Port") has been affected by total metals and polychlorinated biphenyls (PCBs) associated with Sims' scrap metal ship-loading activities.

Also in accordance with Paragraph 12 of the Consent Decree, the SSAP is to conform to, or be consistent with, EPA's Guidance for Quality Assurance Project Plans, EPA QA/G-5 (USEPA 2002). This requirement will be implemented by means of the preparation of a Quality Assurance Project Plan (QAPP) for inclusion in this SAPP, collectively referred to as a SSAP/QAPP.

This Final SSAP/QAPP is prepared by Terraphase Engineering Inc. (Terraphase), a qualified independent consultant, and utilizes EPA-approved methods for metals (including mercury) and PCBs, in accordance with the requirements of the Consent Decree.

This SSAP incorporates the following requirements of Paragraph 12 of the Consent Decree:

- This SSAP presents a plan to investigate the area 50 feet to either side of the Conveyor, between the mean high tide line and Wharf 3. In the event that the investigation indicates that scrap metal associated with Sims' operations extends beyond the 50-foot extent of the Project Area on either side of the Conveyor, this SSAP presents a plan to expand the Project Area laterally along the shoreline, incrementally, at a minimum of 50-foot intervals, until evidence of scrap metal associated with Sims' operations is no longer observed.

- This SSAP also presents a plan to determine background concentrations of metals and PCBs within Redwood Creek sediments by collecting sediment samples from locations outside the area of observed scrap metal impacts, including locations within the axes between the mean high tide line and Wharf 2 and between the mean high tide line and Wharf 4, as well as an additional area between the mean high tide line and Wharf 5. This SSAP includes a plan to collect a sufficient number of sediment samples from each background area to establish a statistically reliable basis for the identification of background concentrations. In accordance with the Consent Decree, given the long-term, historical industrial uses of the Redwood Creek Shipping Channel, in this SSAP/QAPP "background concentrations" are assumed to be the concentrations of metals and PCBs that are present in the sediments due to industrial activities or other sources unrelated to Sims.



ED_013190_00000184-00011

- This SSAP further (i) presents a plan to collect a sufficient number of sediment samples from each side of the Conveyor within the area of observed scrap metal impacts ("the Project Area"); (ii) identifies a statistical approach to determine if the population of samples taken from the Project Area show concentrations of metals and PCBs at levels statistically different from the background concentrations population of samples; and (iii) presents a plan to compare the Project Area sample results to the background concentrations using the identified statistical approach.

- If, based on the statistical approach, the concentration of any constituent sampled from the Project Area and associated with Sims' operations exceeds the background concentration of that constituent at the outermost edges of the area of observed scrap metal impacts associated with Sims' operations, this SSAP presents a plan to extend the sediment Project area incrementally on either side of the Conveyor until the concentrations of metals and PCBs are no longer statistically distinguishable from background concentrations of metals and PCBs determined pursuant to the statistical approach.

- This SSAP is designed so that all sediment characterization work, including laboratory analysis, statistical analysis, and delineation, will be completed, to the extent feasible, within 120 days of EPA's approval of the SSAP.

A Revised Draft SSAP/QAPP was submitted to the EPA on January 22, 2016, in response to EPA comments provided in a letter dated October 8, 2015. This Final SSAP/QAPP addresses EPA comments presented in comment letters dated October 8, 2015 and March 17, 2016, and during in-person meetings between EPA, Sims, and Terraphase representatives on December 14, 2015 and March 8, 2016.

## 1.2 Project Organization

This section provides a description of the organizational structure and responsibilities of the individuals responsible for implementation of the SSAP/QAPP ("the Project"). Terraphase personnel are specifically noted below in the event that Terraphase is selected to implement such scope. This description defines the lines of communication and identifies key personnel who will be assigned to various activities for the Project.

**Project Manager (Sims): Ms. Melisa Cohen, Safety, Health, Environmental, and Community Relations Manager.** The Sims Project Manager will assist with access for and coordination of the activities of Terraphase personnel.

**Project Manager (Terraphase): Mr. Peter Zawislanski, P.G., C.Hg, Principal Hydrogeologist.** The Terraphase Project Manager will manage the development and implementation of Project objectives such that they are fulfilled in a timely manner (including QAPP objectives), and on behalf of Terraphase will ensure that all aspects of the field and office work, including reports, are prepared (i) in accordance with the requirements of the Consent Decree, (ii) in a professional, safe, and prudent manner, (iii) in compliance with applicable laws, (iv) using

properly trained, licensed, and otherwise qualified personnel, (v) in accordance with the highest applicable standards of care, skill, and diligence currently recognized in the profession or industry associated with implementation of the Project scope; and (vi) in proper coordination and communication with Sims and the EPA. The Terraphase Project Manager will manage project strategies and oversee all aspects of the field and office work.

**Technical Lead (Terraphase): Mr. Jeff Wallace, P.G., Principal Geologist.** The Technical Lead is responsible for coordinating the preparation of this SSAP/QAPP. In addition, the Technical Lead will provide overall technical direction and oversight for the preparation of this SSAP/QAPP and the implementation of the Project scope.

**Task Manager and Site Health and Safety Officer (Terraphase): Mr. Daren Roth, Project Geologist.** The Task Manager will manage the pre-field activities and the implementation of field procedures related to implementation of the Project scope. The Site Health and Safety Officer will be responsible the development and implementation of the Health and Safety Plan required for implementation of the Project scope. The Task Manager and Health and Safety Officer will report to the Terraphase Project Manager.

**Project QA/QC Officer (Terraphase): Ms. Emily Mosen, Senior Staff Geologist.** The Project Quality Assurance/Quality Control (QA/QC) Officer will assist in design of the Project scope, will monitor the Project, and will evaluate the Project's QA/QC program. The Project QA/QC Officer will communicate with the Terraphase Project Manager regarding QA/QC issues.

**Laboratory Project Manager/Laboratory QA Officer (Curtis & Tompkins Laboratories): Ms. Tracy Babjar.** The Laboratory Project Manager/Laboratory QA Project Officer will be responsible for the day-to-day coordination of the analytical work performed in the laboratory. Other responsibilities will include coordination of laboratory personnel so that analytical activities conform to the specifications presented in this QAPP; coordination and preparation of the QA samples, analytical instruments, and required reports; and assignment of technical responsibilities to appropriate laboratory personnel. The Laboratory Project Manager/Laboratory QA Officer will report to the Project QA/QC Officer.

## 1.3 Distribution List

Pursuant to Section XIII of the Consent Decree (Appendix A), this SSAP/QAPP and related submissions will be distributed to the following recipients, and addressed as follows:

**To the United States:**

Chief, Environmental Enforcement Section
Environment and Natural Resources Division
U.S. Department of Justice
Box 7611 Ben Franklin Station
Washington, D.C. 20044-7611

Re: DOJ No. 90-5-1-1-10706

Rich Campbell
Office of Regional Counsel
U.S. Environmental Protection Agency
Region IX
75 Hawthorne Street (ORC-2)
San Francisco, CA 94105

**To Sims:**

Chief Corporate Counsel (Compliance)
16 West 22nd Street, 10th Floor
New York, New York 10010

Margaret Rosegay, Esq.
Pillsbury Winthrop Shaw Pittman LLP
Four Embarcadero Center, Suite 2200
San Francisco, CA 94111

## 1.4 Project Background and Objectives

### 1.4.1 Facility Description

Sims operates a metal recycling facility ("the Facility") located at the Port, in San Mateo County, California, immediately to the west of Seaport Boulevard (Figures 1 and 2). At the Facility, Sims receives, sorts, separates, shreds, and stores bulk metal scrap (ferrous and nonferrous) for sale and export. These activities occur on a 13-acre parcel of land located east of a public right-of-way at the Port known as Herkner Road. The areas to the north and south of the Facility are occupied by a variety of other industrial tenants of the Port, some of which are engaged in industrial materials storage, handling, and shipping (Figure 2).

Sims and other unrelated bulk cargo operations conduct industrial ship-loading or unloading activity at Port-owned wharfs located on the western side of Herkner Road, along the bank and shipping channel of Redwood Creek. Port facilities along the water include several ship-loading wharfs, docks, and piers along the eastern shoreline of Redwood Creek. Bauxite, gypsum, and miscellaneous construction materials generally are unloaded from ships docked at the Port. Sims operates a ship-loading conveyor to deliver its scrap metal commodity (shredded specification-grade scrap steel) into the hulls of ships berthed at the Port-owned Wharf 3 located on the western side of Herkner Road. While Sims loads ships with scrap metal, bauxite and gypsum operators unload their commodities at Wharf 3.



ED_013190_00000184-00014

The initial portion of the Conveyor is located on the Facility, but the remainder of the Conveyor spans Herkner Road and a concrete pier and apron located on pilings above the edge of Redwood Creek. The concrete apron is located directly beneath the Conveyor and extends from the shoreline to the edge of Wharf 3. The primary purpose of the apron is to catch material that may fall from the Conveyor during ship-loading operations. The concrete apron was installed in 1991 and was improved in 2002 to include additional screening material along the sides. As noted, other Port tenants use Wharf 3 (but not the Conveyor) for unloading bulk materials, including bauxite and gypsum.

### 1.4.2 Project Area

The Project Area is a rectangular area in Redwood Creek that extends 50 feet on either side of the Sims Conveyor, between the inner edge of Wharf 3 and the mean high-tide line along the shoreline (Figure 2). The Conveyor is located in the center of the Project Area and extends from the shoreline to Wharf 3. The shoreline in the Project Area contains boulders and broken concrete (riprap).

As noted above, the Project Area may be expanded in 50-foot increments to the north and/or south, until evidence of scrap metal associated with Sims operations is no longer observed in marine sediments.

The Sims Conveyor is fixed in place with an adjustable chute which directs the product directly into the holds of the ships. The length of the Conveyor from the shoreline to the chute is approximately 120 feet. The Conveyor is completely enclosed, and a walled, concrete apron is present directly beneath the Conveyor, where it extends over Redwood Creek between the shoreline and Wharf 3.

### 1.4.3 Project Approach

In accordance with the Consent Decree, an SSAP is required to characterize the shallow marine sediment in portions of Redwood Creek between Wharf 3 and the shoreline near the Conveyor. Sediment samples will be collected in the Project Area to assess the lateral extent of metals and PCBs that may be associated with Sims' ship-loading activities. For comparative purposes, as discussed above, sediment samples will also be collected from areas outside the area of observed scrap-metal impacts to represent Redwood Creek background conditions for this Project.

### 1.4.4 Project Objectives

The principal objective of the SSAP is to characterize the marine sediment in the vicinity of the Conveyor in accordance with the Consent Decree. The individual project objectives include:

- Visually assess near-surface sediment in the vicinity of the Conveyor for evidence of scrap metal to establish the area of observed scrap metal impacts;



ED_013190_00000184-00015

- Determine background concentrations of metals and PCBs in surficial sediments of Redwood Creek between Port wharfs and the shoreline, in accordance with the Consent Decree, by sampling near-shore areas in the creek channel that are outside the area of observed scrap metal impacts; and
- Assess the lateral extent of metals and PCBs in surficial sediments in the Project Area.

This document will also serve as the QAPP, in accordance with the Consent Decree.

## 1.5 Project/Task Description and Schedule

Sediment samples will be collected and analyzed for constituents of interest (COIs) as specified in the Consent Decree (Appendix A). The data will be evaluated to determine if the objectives outlined above have been met. The following sections discuss the tasks, products, and schedule that will be used to support the sampling effort.

### 1.5.1 Work Tasks and Products

The work tasks and products associated with this SSAP/QAPP include the following tasks, which will be performed in accordance with the requirements of the Consent Decree:

- Visual observation of sediments for evidence of scrap metal;
- Collection of surface and subsurface sediment samples in the Project Area;
- Collection of surface and subsurface background sediment samples;
- Analysis of sediment samples for metals and PCBs;
- Calculation of background concentrations of metals and PCBs;
- Data review and assessment;
- Preparation of a sampling and analysis data report summarizing the field activities and observations, tabulated analytical results, background concentrations and statistical analyses, and a presentation of the lateral extent of affected sediment. Photographs of the sediment cores, and representative photographs of the nearshore surface conditions and field activities will be provided. Boring logs for the sediment cores will also be included in the report.

### 1.5.2 Project Schedule

The field activities associated with the sediment investigation will be implemented as soon as practical following the approval of the SSAP/QAPP. A sampling and analysis data report summarizing the field observations and analytical results will be submitted to the EPA within 120 days of approval of this document. Factors beyond Sims' control, such as delays related to

permitting, ship-loading schedules, and other activities in the Port, may affect the Project schedule.

## 1.6 Quality Objectives and Performance Criteria

This investigation is a new data collection effort. The type, quality, quantity, and uses of data to be collected are specified in Sections 2.1 through 2.6.

If the dataset resulting from a particular sampling area is determined to contain concentrations of constituents that are statistically higher than those resulting from the background dataset, in accordance with the requirements of the Consent Decree, that sampling area will be identified as an area potentially affected by observed scrap metal impacts. The methods described in Section 2.1.4 will be used to evaluate whether results from a particular sampling area are higher than background concentrations. Results from individual sampling locations may be compared to background concentrations to estimate the extent of the impacted area.

The parameter estimate chosen for this investigation is the mean concentration within each of the datasets described in Section 2.1. The uncertainty in the parameter estimate will be expressed through a confidence interval that will include the estimate of the mean and the margin of error.

Analytical results will be subjected to data validation. Data are considered valid if the specified limits on precision, accuracy, representativeness, comparability, and completeness are achieved. The results of detected target constituents will be considered in evaluating the need for additional sampling.

## 1.7 Documents and Records

The following documents and records will be produced during this investigation:

- Sampling records (field log forms, boring logs, chain-of-custody records, photographs)
- Analytical data
- Data validation reports
- Sampling and analysis data report

Field activities will be recorded on field log forms (Appendix C). The field log forms will provide a daily record of significant events, observations, and measurements taken during the field investigation. The field log forms are intended to provide sufficient data and observations to enable the field team to reconstruct events that occurred during the project. Each entry will be made in ink and will include the following, as appropriate, for each activity undertaken:

- Date and time of sample collection



ED_013190_00000184-00017

- Weather conditions, including temperature
- Sampling locations
- Sample identification number
- Field observations
- References, such as maps or photographs of the sampling site
- Deviations from procedures outlined in this SSAP/QAPP

Corrections on the field log forms will be made by crossing out the erroneous data with a single line, adding the correct information, then initialing and dating the correction. If applicable, the name, title, and affiliation of each site visitor will be recorded on the field log forms. Sampling personnel will also record the weather conditions and other conditions at the sampling location that may affect sample collection, the apparent representativeness of the sample, or sample analysis. The field log forms will be placed in the project file at the completion of the project.



ED_013190_00000184-00018

# 2.0 DATA GENERATION AND ACQUISITION

## 2.1 Sampling Process Design

This section describes the sampling process design and rationale that will be used to direct the sediment sample collection. The proposed sediment sample locations are presented on Figures 3 through 6. The proposed sediment samples fall into two categories: (1) potentially impacted sediment in the vicinity of the Conveyor (i.e., the Project area), and (2) Redwood Creek background sediment south of Wharf 2, north of Wharf 4, and north of Wharf 5.

The number of samples selected in each area reflects the estimated population that will provide a statistically reliable data set to establish background concentrations or to evaluate the spatial distribution of scrap-metal-affected sediment near the Conveyor in accordance with the Consent Decree.

### 2.1.1 Potentially Affected Sediments

Sediment samples will be collected from 29 locations along six transects within 50 feet north and south of the Conveyor using a Petite Ponar sampler (or other equivalent surface-deployed device). Surface sediment samples will be collected at 26 locations and sediment cores will be obtained at three additional locations (Figure 3). Sediment cores will be advanced to a nominal target depth of 3 feet using a piston coring device. Three samples from each core will be collected for laboratory analysis, including surface samples at these locations. The total number of primary samples planned is 35 (one sample from each of the 26 surface locations plus three samples from the sediment cores at three coring locations).

The area was selected in conformance with the sampling protocol presented in the Consent Decree, which requires investigation of "the area 50 feet to either side of the Conveyor, between the mean high tide line and Wharf 3." The proposed sample transects are located approximately 0 feet, 20 feet, and 40 feet north and south of the conveyor. To expedite the assessment of the potentially affected sediment, 23 contingency surface sediment samples will also be collected from five transects located approximately 60, 80, and 100 feet south of the conveyor, and 60 and 105 feet north of the conveyor and placed on hold with the analytical laboratory (Table 1). Samples will not be collected from beneath the east-west trending portion of Wharf 3 that connects to the eastern shoreline of Redwood Creek north of the Conveyor. In addition, due to the low clearance and footings associated with this portion of Wharf 3, it is logistically impractical to collect sediment samples from underneath that wharf. It also is unlikely that this sediment is representative of the sediment conditions in the vicinity of the Conveyor because the area is covered by the wharf; therefore, the likelihood of scrap metal reaching the sediment under the wharf is low.

Sediment from the 35 primary samples will be analyzed for total metals and PCB Aroclors (Tables 1 and 2). The 23 contingency sediment samples will be analyzed only if the field



ED_013190_00000184-00019

observations and analytical data from the adjacent primary sediment samples indicate impacts above background concentrations (Table 2).

### 2.1.2 Redwood Creek Background Concentrations

As presented in the Consent Decree, sediment samples will be collected from designated areas outside of the observed area of scrap metal impacts in the portion of Redwood Creek between wharfs, other than Wharf 3, and the shoreline to establish background concentrations of metals and PCBs. This includes the areas between the mean high-tide line and Wharfs 2, 4, and 5.

Background sediment samples will be collected using the same method as the potentially affected sediment samples (i.e., using a Petite Ponar sampler and piston coring device from a boat, or on foot using a trowel). The background sediment samples will be collected from locations south of Wharf 2 (Figure 4), north of Wharf 4 (Figure 5), and north of Wharf 5 (Figure 6). At one location in each of the three background sampling areas, one sediment core will be advanced and sampled as described in Section 2.1.1.

The 36 background sediment samples will be analyzed for total metals and PCB Aroclors (Tables 1 and 2).

### 2.1.3 Calculation of Minimum Sample Number

A standard deviation was calculated for selected COIs based on historical data collected in the area within 60 feet of the Conveyor. These values represent preliminary estimates for the variability in concentrations which can be expected in the dataset generated during this investigation. The standard deviation results were input into the DQOs Based Sample Sizes module of ProUCL 5.0[1], together with the selected confidence level of 95%. The module provides an approximate minimum number of samples required to estimate the population mean. The number of samples which will be collected from the sampling areas defined in Sections 2.1.1 and 2.1.2 is greater than six, the approximate minimum number of samples indicated by ProUCL.

### 2.1.4 Post-Sampling Data Analysis

The purpose of this section is to describe the procedure for evaluating whether concentrations of COIs detected near the conveyor are statistically different from the concentrations detected in background samples.

The investigation will generate multiple datasets, as described in Section 2.1. The 95% upper confidence limit (UCL) of the mean will be calculated to characterize the population represented by each dataset.

[1] ProUCL is a statistical software package for environmental applications for data sets with and without non-detection observations, downloadable from EPA's Technical Support Center website (http://www.epa.gov/osp/hstl/tsc/software.htm)



ED_013190_00000184-00020

In the context of this investigation, the null hypothesis represents the possibility that concentrations of metals and PCBs in samples collected near the conveyor are not significantly different from background concentrations. The alternative hypothesis represents the possibility that concentrations of metals and PCBs in samples collected in areas near the conveyor exceed background concentrations and may be an indication of potential impacts from ship-loading activities. As described in Section 2.1.1, contingency samples will be collected from an expanded Project Area, which includes the area more than 50 feet north and south of the conveyor. If analysis of the contingency samples is warranted in both areas, the datasets resulting from each area may be assessed separately, if appropriate.

In an effort to test the null hypothesis, the calculated 95% UCL values will be compared to determine if statistically significant differences are observed between data collected from potentially affected areas and background data. If significant differences exist, the null hypothesis will be rejected.

The statistical analysis described above will be used to evaluate whether each sampling area exhibits concentrations of COIs above background. However, results from individual sampling locations may be compared to the background 95% UCL in order to further delineate the area of potential impacts.

## 2.2 Preparatory Activities

### 2.2.1 Health and Safety

A site-specific health and safety plan (HASP) will be prepared in accordance with Occupational Safety and Health Administration (OSHA) 29 CFR 1910.120 and Cal OSHA Title 8 Section 5192(e) prior to commencement of field activities described in this SSAP/QAPP. The HASP will address hazards associated with the anticipated sediment sampling activities.

Prior to the start of operations at the Project Site, the Site Health and Safety Officer will conduct a site safety briefing, which will include all personnel involved in field operations. All field personnel are to attend the briefings and sign the briefing form. Briefings will also be conducted if new personnel report to the site. For each briefing, the Site Health and Safety Officer will complete a site safety briefing form that will be kept in the project file.

Field personnel will participate in medical surveillance programs that meet the requirements of 29 CFR 1910.120(f).

### 2.2.2 Special Training/Certification

Field personnel will meet the Hazardous Waste Operations and Emergency Response (HAZWOPER) training requirements and other requirements of 29 CFR 1910.120(e).

Sampling below the low-tide line will be accomplished from a boat or barge; sample collection from the riprap or very shallow areas above the low-tide line will be collected on foot. Site

personnel shall use a U.S. Coast Guard-approved life jacket or buoyant work vest, and shall conduct work in accordance with the OSHA requirements of 29 CFR 1926.106 ("Working over or near water").

The project team will include members who have obtained a Transportation Worker Identification Credential (TWIC), at a minimum ratio of one TWIC holder to five non-holders.

### 2.2.3 Underground Service Alert

USA will be contacted a minimum of 48 hours prior to the commencement of work so utility holders can locate and mark utilities in the vicinity of the proposed work area.

### 2.2.4 Permitting and Notifications

Applicable permits, access agreements, and/or approvals will be obtained as required. Based on our preliminary review, the permitting and authorization requirements for this sampling are summarized by agency as follows:

- United States Army Corps of Engineers (USACE): This activity is covered by non-reporting Nationwide Permit No. 6. (NWP 6). **No action is required.**
- Regional Water Quality Control Board (Water Board): NWP 6 has been pre-certified by the Water Board; however, **this agency requires a notification be submitted 21 days before the initiation of the sampling.**
- California Department of Fish and Game (CDFG): **This activity area is out of the CDFG jurisdiction** relevant to Section 1602.
- National Oceanic and Atmospheric Administration-National Marine Fisheries Service: **No action necessary** because the sampling activity is unlikely to affect migratory fish.
- Bay Conservation and Development Commission (BCDC): Generally, **a BCDC permit is not required** when less than 1 cubic yard of sediment is sampled, and no backfilling is proposed. The total estimated volume of sediment that will be sampled during the project is 0.3 to 0.9 cubic yard, and no backfilling is proposed. However, Terraphase may consult with BCDC staff, if appropriate, to ensure that no permit is needed.

Prior to implementing the field activities, Sims will notify the Port to coordinate the sampling around ship loading and unloading activities at various wharfs of the Port and to receive the necessary security clearance. The notification will be made to Christopher Fajkosh, Manager of Environmental, Security, and Safety Programs for the Port of Redwood City.

Sims will coordinate the sampling schedule with the EPA to accommodate EPA for field observation and, potentially, collecting split samples.



ED_013190_00000184-00022

## 2.3 Sampling Methods

This section describes the sediment sampling methods, sample processing procedures, equipment decontamination procedures, and investigation-derived waste (IDW) handling procedures. Table 1 summarizes the number of samples required for each type of sediment sampling.

### 2.3.1 Sediment Sample Collection

As discussed in Section 2.1, sediment samples will be collected in four areas:

- the vicinity of the conveyor on Wharf 3 (the project area)
- Redwood Creek south of Wharf 2 (background location)
- Redwood Creek north of Wharf 4 (background location)
- Redwood Creek north of Wharf 5 (background location)

Surface sediment samples will be collected using either a Petite Ponar grab sampler to be deployed from a boat, or a manual grab sample using a trowel for areas near the shore that are above the low-tide line. Subsurface sediment samples will be collected using a piston coring device. The sampling methods are described below. Further sampling details are provided in Appendix B - Standard Operating Procedures (SOPs).

A handheld Global Positioning System (GPS) unit with sub-meter accuracy will be used to locate each proposed sample location. If the locations need to be modified in the field due to access, the coordinates will be recorded using the GPS following sample collection.

At each location, the samples will be visually assessed and the following information will be logged:

- Sample ID
- Depth to sediment surface
- Maximum penetration depth of the sampler
- Characteristics of the sediment including:
  - Texture
  - Color (Munsell scale)
  - Presence and type of debris, especially metal debris
  - Visible staining
- Other observations

Boring logs will be prepared describing the material penetrated at the six sediment coring stations.



ED_013190_00000184-00023

#### *2.3.1.1 Petite Ponar Sampling Protocol*

A Petite Ponar grab sampler (or equivalent clam-shell-style sampler) will be deployed from a boat to collect surface sediment samples at the approximate locations presented on Figures 3 through 6. This sampler is typically capable of obtaining good penetration with little sample disturbance. The sampler has a self-closing design which releases when the sediment surface is impacted and the lowering cable becomes slack.

If necessary, the Petite Ponar sampler can also be deployed from the wharfs or catwalks if the boat is unable to safely collect samples immediately adjacent to these areas.

Before the work begins, the sampler will be decontaminated as described in Section 2.3.2. At the desired sample location, the boat will either be anchored or poles will be used as spuds to ensure that the sample is collected at the desired location. The sampler will be gently positioned outboard of the vessel and the safety pin will be removed. The sampler will descend in the water column at a rate no faster than 1 foot per second to prevent the creation of a bow wave. On contact with the bottom, as denoted by slackness in the lowering line, the sampler will be slowly raised to the surface so as not to disturb the collected sediment.

Once the sampler is secured on deck, the safety pin will be returned, and the sample will be inspected to ensure that adequate sample volume was obtained. If the sampled amount is deemed insufficient, the sampler will be rinsed and the sampling process repeated.

Before an acceptable sample is processed, any overlying water present will be removed with a siphon tube, with care taken not to siphon off the upper layer sediments. Before the sediment is collected for chemical analysis, the contents will be thoroughly described, as discussed in Section 2.3.1, and photographed. The contents will be homogenized in a decontaminated stainless-steel bowl. Debris larger than 1/8-inch in any dimension will be physically removed from the sample in the field, either manually based on visual examination, or by pressing the sample through a woven wire mesh screen, prior to placement of the sub-sample into a sample container. Material removed from the samples will be photographed, containerized and archived in a secure onsite location. The information will be recorded on a field log form (Appendix C), after which the sample will be placed into a laboratory-provided jar for subsequent shipment to an analytical laboratory. The subsample for lab analysis will have a minimum volume of approximately 16 ounces. The lab will use a small fraction of this volume for analysis. The remaining sample will be archived at the analytical lab for six months. If requested by the EPA, split samples will be collected and transferred to EPA custody.

The sampler will then be decontaminated and the process repeated at the next sample location.

#### *2.3.1.2 Sediment Coring Protocol*

A piston coring sampler will be deployed from a boat to collect subsurface sediment samples at four locations in the primary study area, and at three background locations (one per background

area). The nominal target depth of the cores will be 3 feet below the sediment surface. The approximate coring locations are indicated on Figures 3 through 6. A piston coring sampler is typically capable of obtaining good penetration with little sample disturbance. The sampler has a self-closing design that releases when the sediment surface is impacted and the lowering cable becomes slack.

The sampler will be decontaminated before the work begins and between sampling locations. At the desired sample location, the boat will either be anchored or poles will be used as spuds to ensure that the sample is collected at the desired location. The sampler will be manually lowered over the gunnel of the boat vessel to the sediment surface, and will be pushed into the sediment to the 3-foot target depth. As the core is advanced, the piston will be extracted to improve sample recovery by creating a slight vacuum within the core barrel.

Once the sampler is retrieved, the sediment core will be extracted and inspected to ensure that adequate sample volume was obtained. If the sampled amount is deemed insufficient, the sampler will be rinsed and the sampling process repeated. If the target depth is not achieved, up to two additional attempts will be made within a 5-foot-radius of the original planned sample location in an effort to obtain a 3-foot core at each station.

Assuming 3-foot cores are obtained, discrete individual samples from each core will be approximately 0 to 6 inches, 18 to 24 inches, and 30 to 36 inches. Before the sediment is collected for chemical analysis, the core contents will be thoroughly described, as discussed in Section 2.3.1, and photographed, and the information will be recorded on a boring log form (Appendix C). A sub-sample will be removed from the coring device, and homogenized in a decontaminated stainless-steel bowl. Debris larger than 1/8-inch in any dimension will be physically removed from the sample in the field, either manually based on visual examination, or by pressing the sample through a woven wire mesh screen, prior to placement of the sub-sample into a sample container. Material removed from the samples will be photographed, containerized and archived in a secure onsite location. The sample intervals may be adjusted if the cores do not reach the target 3-foot depth.

The portions of the sediment core collected but not retained for chemical analysis will be containerized and archived at the analytical laboratory for six months. If requested by the EPA, split samples will be collected and transferred to EPA custody.

#### *2.3.1.3 Trowel Sampling Protocol*

If the sample locations near the shore are not accessible by boat, are in the area of riprap, and/or are above the low-tide line, sediment samples may be manually collected at low tide when the sediment is exposed. If necessary, field staff will access the exposed sediment on foot in the shallow area near the riprap. Either a new disposable scoop will be used at each location, or a stainless steel trowel will be used and will be decontaminated between sample locations, as described in Section 2.3.2.

The samples will be collected, with a trowel, from the sediment surface to a maximum depth of approximately 6 inches below the sediment surface. Debris greater than approximately one-quarter-inch in diameter will be physically removed from the sample in the field. Material removed from each sample will be photo-documented and then discarded as IDW. The samples will be transferred to laboratory-supplied glass sample jars. The sediment sample characteristics will be recorded on the field log forms.

If requested by the EPA, split samples will be collected and transferred to EPA custody.

#### *2.3.1.4 Equipment Rinsate and Field Blanks*

One equipment rinsate blank will be collected per day by pouring distilled water over the decontaminated equipment used for sampling, and collecting the resulting rinsate water for analysis. The equipment rinsate blank will be analyzed for the same constituents as the sediment samples to confirm that proper decontamination procedures were followed during the field activities.

In addition, one field blank will be analyzed in the sampling event. Laboratory-supplied deionized water will be used for decontaminating equipment, and the equipment and source water blanks. The field blank sample will be analyzed to demonstrate that contamination is not originating from the laboratory-supplied deionized water. The field blank will also be analyzed for the same constituents as the equipment rinsate blank.

Equipment rinsate and field blanks are discussed further in Section 2.6.1.

### 2.3.2 Decontamination Procedures

Reusable equipment that may come in contact with the sediment samples will be properly decontaminated between sample locations to prevent cross-contamination of samples. The decontamination process will include the following:

- washing the equipment with a laboratory-grade detergent and water solution,
- rinsing with distilled water,
- rinsing with a 10-percent nitric-acid solution, and
- a final rinse with distilled water.

### 2.3.3 Investigation-Derived Waste Handling

IDW, including sediment cuttings and decontamination fluids, will be placed in Department of Transportation-approved 55-gallon drums or lined soil bins. The waste containers will be labeled with date, contents, generator, and contact information. At the completion of field activities, the waste will be profiled, transported, and disposed of by a licensed disposal contractor to an appropriate disposal facility.



ED_013190_00000184-00026

### 2.3.4 Sampling Summary

Table 1 summarizes the number of primary, contingency, and background sediment samples identified for collection.

## 2.4 Sample Handling and Custody

The purpose of the following sample handling procedures is to ensure that the quality of samples is maintained during collection, transportation, storage, and analysis.

### 2.4.1 Sample Labeling and Identification

Sample labels will be completed and attached to the sample container for every sample collected. Labels are made of a waterproof material backed with a water-resistant adhesive. Labels will be filled out using waterproof permanent ink and will include, at a minimum, the sample name, the sampling date, the sampling location, the sampler's name, and the analyses to be conducted.

Samples will be identified according to the following naming convention:

WA-B-SD-C-D

where:

W signifies "Wharf"

A is the nearest wharf number

B is sample identification number

SD signifies the matrix (e.g., sediment)

C is the beginning depth

D is the ending depth

### 2.4.2 Chain-of-Custody/Analysis Request Forms

For each sample that is submitted to a laboratory for analysis, an entry will be made on a chain-of-custody (COC) form. COCs will be prepared for groups of samples collected on a given day. Original COCs will accompany each shipment of samples to the laboratory. Scanned versions of COCs will be kept in the project file. The COC documents the identity of all personnel involved in sample transfer. The following information is entered on the COC:

- project name and number
- COC serial number

- project location
- sample numbers
- sampler's/recorder's signature
- date and time of collection
- number and type of containers
- sample matrix
- analyses requested for each sample
- preservation method
- name of person receiving the samples
- date and time of receipt of samples
- address of laboratory
- phone number and/or email address and name of person to whom results should be reported
- additional remarks (e.g., special handling or analysis requirements)

Sampling team members will maintain custody of the samples until they are relinquished to laboratory personnel or a professional courier service. The COC form will accompany the samples from the time of collection until they are received by the laboratory. Each party in possession of the samples (except the professional courier service) will sign the COC form signifying receipt. The COC form will be placed in a plastic bag and transported in the cooler with the samples. A copy of the original completed form will be provided by the laboratory along with the report of results. Upon receipt, the laboratory will inspect the condition of the sample containers and report the information on a COC or similar form. The method of sample shipment will be noted on the COC. Strict COC procedures will be maintained during sample handling.

### 2.4.3 Sample Packaging and Shipment

Samples will be placed in an ice-chilled cooler for transport to a California-certified laboratory for analysis.

In the event that a private courier service, such as United Parcel Service, Inc., or Federal Express, is used to transport the samples, a copy of the bill of lading (air bill) will be retained and will become part of the sample custody documentation as will a copy of the COC. The laboratory will be notified in advance of sample shipments.

Upon receipt of the samples, the Laboratory QA Officer will immediately notify the Project QA/QC Officer if conditions or problems are identified that require immediate resolution. Such conditions include container breakage, missing or improper COC, exceeded holding times, missing or illegible sample labeling, or temperature excursions.



ED_013190_00000184-00028

## 2.5 Analytical Methods, Screening Levels, and Reporting Limits

Analytical methods and associated performance criteria, and reporting limits for sample analysis are discussed briefly below. The analytical methods, sample requirements, and reporting limits are presented in Table 2.

### 2.5.1 Chemical Analyses

#### *2.5.1.1 Metals*

Sediment samples will be analyzed for total metals by EPA Methods 6010C and 7471B (mercury) (Tables 1 and 2). The metals results will include the Title 22 metals list (antimony, arsenic, barium, beryllium, cadmium, chromium, cobalt, copper, lead, mercury, molybdenum, nickel, selenium, silver, thallium, vanadium, zinc), aluminum, and iron. Performance criteria for the method shall be defined in the method (U.S. EPA 1996, or most recent version).

The ratio of aluminum and iron will be used to evaluate if elevated metals concentrations in sediment are related to scrap metal or to other industrial commodities (such as bauxite or gypsum) related to Port activities. Scrap metal has high iron content, whereas bauxite, which is also loaded along Wharf 3, has high aluminum content.

#### *2.5.1.2 Polychlorinated Biphenyls*

Sediment samples will be analyzed for PCBs as Aroclors using EPA Method 8082A. Sample extraction will be performed using either EPA Method 3540C or 3541. Performance criteria for each PCB method shall be as defined in the method (U.S. EPA 1996, or most recent version).

#### *2.5.1.3 Moisture Content*

A gravimetric moisture content analysis will be performed on sediment samples. The percent moisture in the samples will be used to convert the analytical data between wet weight and dry weight. Sample results will be reported as dry weight. Moisture content data will be provided in the laboratory report.

### 2.5.2 Analytical Method Limits

Sensitivity requirements for analytical methods are driven by the project objectives. The laboratory methods and method reporting limits should ensure sufficient sensitivity to meet project objectives (the screening levels). The method detection limit (MDL), method quantitation limit (MQL), and method reporting limit (MRL) are defined below for reference.

**Method Detection Limit**

The MDL is the minimum concentration of a substance that can be measured and reported with 99 percent confidence that the analyte concentration is greater than zero, and it is determined from analysis of a sample in a given matrix containing the analyte.

**Method Quantitation Limit**

The MQL represents the value for which the laboratory has demonstrated the ability to reliably quantify target analytes within prescribed performance criteria for the method performed. Operationally, it is equivalent to the concentration of the lowest calibration standard in the initial calibration curve and must be at least three times the MDL.

**Method Reporting Limit**

The MRL is a threshold value below which the laboratory reports a result of non-detect. It may be based on project-specific concentrations of concern, regulatory action levels, or sensitivity capability of method and instrument. MRLs are adjusted based on the sample matrix and any necessary sample dilutions. Operationally, it is equivalent to the MQL adjusted based on the sample matrix and any necessary dilutions.

### 2.5.3 Assignment of Numbers to Non-detected Values and Summation of PCBs for Calculation of Total PCBs

PCB Aroclors will be reported down to their MDLs, if detected. For non-detected PCB Aroclor values, the qualifier "U" will be associated with their MRL and not MDL (e.g., "1.6U," where the MRL was 1.6 and the MDL was somewhat lower).

The following summation criteria for PCBs will be used:

- Detected PCBs will be summed and the total PCBs will be presented along with each individual PCB concentration in the data tables. The RLs of non-detected PCBs will not be included in the summation of detected values.
- For samples with no detected PCB concentrations, the total PCBs will be reported as the highest MRL and will be presented as "<" the MRL (e.g., "<2.5").

## 2.6 Quality Control

The overall QA objectives for field sampling and laboratory analysis are to produce data of known and appropriate quality to support the project objectives. Appropriate procedures and QC checks will be used so that known and acceptable levels of accuracy and precision are maintained for each data set. Field QC and laboratory QC samples will be employed to evaluate data quality. QC samples are controlled samples introduced into the analysis stream, the results of which are used to review data quality and to calculate the accuracy and precision of the chemical analysis program. The purpose of each type of QC sample, collection and analysis frequency, and evaluation criteria are described in this section. Laboratory QC samples, as described in the referenced methods, will be followed.

The quality of field and laboratory measurements will generally be determined by the QC requirements and quality criteria described in analytical methods. QC measurements and data

assessment for this project will be conducted on samples from and within batches of samples from this project alone when possible.

QC checks for sample collection will be accomplished by a combination of COC protocols, field quality control samples, and laboratory QA as described in the sampling or analytical methods. The Laboratory QA Officer will notify the Project QA/QC Officer of any quality control exceedances outlined in this QAPP immediately.

### 2.6.1 Field Quality Control Samples

Field QC samples are collected to evaluate the quality of the field sampling program. Field QC samples will be documented on the field log form, as appropriate.

#### *2.6.1.1 Field Duplicates*

Due to the anticipated spatial variability of COI concentrations in sediments, field duplicate sediment samples will not be collected during this investigation.

#### *2.6.1.2 Equipment Rinsate Blanks*

An equipment rinsate blank will be collected from the final water rinsed over equipment after decontamination has been performed, to monitor the effectiveness of the decontamination procedures. The equipment rinsate blank will be collected from non-disposable (reusable) sampling equipment (i.e., ponar and piston core sampler and trowel). To collect an equipment rinsate blank sample, distilled water will be poured over or through the recently cleaned equipment and carefully collected directly into an appropriate sample container held over a bucket. Equipment rinsate blank samples will be stored and processed in the same manner as the other samples. One equipment rinsate blank will be collected each day during which equipment decontamination is conducted. The equipment rinsate blank(s) will be analyzed for the sample analyte using the same analytical methods used for samples collected during the field day.

#### *2.6.1.3 Field Blanks*

Field blank samples consist of a sample of the laboratory-supplied deionized water used to clean sampling equipment during decontamination activities. The purpose of the field blank sample is to evaluate the deionized water for the presence of COIs for which the samples are being analyzed. A field blank sample will be collected by pouring deionized water into the appropriate sample container. One field blank sample will be collected per sampling event. The field blank sample will be analyzed for the sample analyte using the same analytical methods used for samples collected during the field day.



ED_013190_00000184-00031

### 2.6.2 Laboratory Quality Control Samples

Laboratory QC checks are accomplished by analyzing initial and continuing calibration samples, method blanks, blank spikes, matrix spikes, surrogate spikes, laboratory control samples (LCSs), and laboratory duplicate samples.

#### *2.6.2.1 Method Blank Samples*

Method blanks are used to check for laboratory contamination and instrument bias. Laboratory method blanks will be analyzed at a minimum frequency of one in 20 samples or one per analytical batch. Analytical results for each sample shall be clearly associated with a particular method blank. In order to evaluate low level determinations of target compounds in samples, the laboratory will report any detected concentration found in method blanks that exceed control criteria as determined by the laboratory.

#### *2.6.2.2 Blank Spike Samples*

Blank spikes are performed by the analytical laboratory to monitor the accuracy of the analytical process, in the absence of any matrix interferences. Blank spikes are aliquots of laboratory reagent water, or sand, that have been supplemented ("spiked") with known concentrations of the compounds of interest and then carried through the sample preparation and analysis process. The concentrations of the spiked compounds are then compared to the concentration that was added, and is expressed as a percent recovery.

Blank spike recoveries are reviewed to check that they are within an acceptable range. Blank spikes and blank spike duplicates will be analyzed by the laboratory at a frequency of at least one per 20, or 5 percent of the primary field samples. The laboratory will provide blank spike and blank spike duplicate acceptance criteria.

#### *2.6.2.3 Matrix Spike Samples*

Matrix spikes are performed by the analytical laboratory to evaluate the efficiency of the sample extraction and analysis procedures, and are necessary because matrix interference (that is, interference from the sample matrix, water, or soil) may have a widely varying effect on the accuracy and precision of the extraction analysis. The matrix spike is prepared by the addition of known quantities of target compounds to a sample. The sample is extracted and analyzed, the results of the analysis are compared with the known additions, and a matrix spike recovery is calculated, giving an evaluation of the accuracy of the extraction and analysis procedures.

Matrix spike recoveries are reviewed to check that they are within an acceptable range. However, acceptable ranges vary widely with both sample matrix and analytical method. Matrix spikes and matrix spike duplicates will be analyzed by the laboratory at a frequency of at least one per 20, or 5 percent of the primary field samples. Typically, matrix spikes are performed in duplicate to evaluate the precision of the procedures as well as the accuracy. Precision objectives (represented by agreement between matrix spike and matrix spike duplicate



ED_013190_00000184-00032

recoveries) and accuracy objectives (represented by matrix spike recovery results) are based on statistically generated limits established annually by the analytical laboratory. It is important to note that these objectives are to be viewed as goals, not as criteria. If matrix bias is suspected, the laboratory will reanalyze the sample or the associated data will be qualified and the direction of the bias indicated in the data validation report. The laboratory will provide matrix spike and matrix spike duplicate acceptance criteria.

#### *2.6.2.4 Surrogate Compound Analysis*

Surrogates are added to each sample for organic analysis. The results of surrogate standard determinations are compared with the true values spiked into the sample matrix before extraction and analysis, and the percent recoveries of the surrogates are calculated. If these recoveries fall outside control limits, the associated data may be affected. If a surrogate recovery is not within the recovery criteria range, then the laboratory will reanalyze the sample or the appropriate validation flag will be applied to the associated sample result. The laboratory will provide surrogate recovery acceptance criteria.

#### *2.6.2.5 Laboratory Control Samples*

Laboratory control samples analyzed by the laboratory following U.S. EPA method protocols are compared with true values and acceptable ranges as indicators of error and provide for implementation of corrective action. If a laboratory control recovery is not within the recovery criteria range, then the laboratory will either reanalyze the sample, or the appropriate validation flag (as described in the applicable validation procedure) will be applied to the associated sample result. The laboratory will provide laboratory control sample recovery acceptance criteria.

#### *2.6.2.6 Sample Duplicates*

Sample duplicates are used to monitor the precision of the analytical process and may also provide information concerning the homogeneity of the sample. A sample is prepared and analyzed in duplicate, with the difference in concentration between two aliquots reported as the relative percent difference (RPD). The laboratory will provide sample duplicate recovery acceptance criteria.

### 2.6.3 Analytical Data Quality Indicators

#### *2.6.3.1 Precision*

Precision measures the reproducibility of repetitive measurements. It is strictly defined as the degree of mutual agreement among independent measurements as the result of repeated application of the sample process under similar conditions.

Analytical precision is a measurement of the variability associated with duplicate or replicate analyses of the same sample in the laboratory, and is determined by analysis of laboratory QC

samples, such as matrix spike duplicates or blank spike duplicates. If the recoveries of analytes in the specified control samples are comparable within established control limits, then precision is within limits.

Total precision is a measurement of the variability associated with the entire sampling and analytical process. It is determined by analysis of duplicate or replicate field samples, and measures variability introduced by both the laboratory and field operations. Field duplicate samples are analyzed to assess field and analytical precision.

Duplicate results are assessed using the RPD between duplicate measurements. If the RPD for laboratory QC samples exceeds established laboratory RPD criteria, data will be qualified as described in the applicable validation procedure. The RPD will be calculated as follows:

$$RPD = 100 \times |X_2 - X_1| / (X_2 + X_1) / 2$$

where: $X_1$ and $X_2$ are the two observed values

#### *2.6.3.2 Accuracy*

Accuracy is a statistical measurement of correctness and includes components of random error (variability because of imprecision) and systematic error. It reflects the total error associated with a measurement. A measurement is accurate when the value reported does not differ from the true value or known concentration of the spike or standard.

Accuracy of laboratory analyses will be assessed by laboratory control samples, surrogate standards, matrix spikes, and initial and continuing calibrations of instruments. Laboratory accuracy is expressed as the percent recovery (%R). Accuracy limits are statistically generated by the laboratory or required by specified U.S. EPA methods. If the percent recovery is determined to be outside of acceptance criteria, data will be qualified as described in the applicable validation procedure. The calculation of %R is provided below:

$$\%R = 100 \times (X_s - X) / T$$

where:

$X_S$ is the measured value of the spiked sample

X is the measured value of the unspiked sample

T is the true value of the spike solution added

#### *2.6.3.3 Representativeness*

Representativeness is the degree to which data accurately and precisely represent selected characteristics of the media sampled. Representativeness of data collection is addressed by careful preparation of sampling and analysis programs. This SSAP/QAPP addresses representativeness by specifying the numbers and locations of samples, incorporating

appropriate sampling methodologies, specifying proper sample collection techniques and decontamination procedures, selecting appropriate laboratory methods to prepare and analyze samples, and establishing proper field and laboratory QA/QC procedures.

#### *2.6.3.4 Comparability*

Comparability is an expression of confidence with which one data set can be compared to another. The objective of comparability is to verify that data developed during the investigation are comparable to site knowledge and adequately address applicable criteria or standards established by the U.S. EPA and California Department of Toxic Substances Control (DTSC). This QAPP addresses comparability by specifying laboratory methods that are consistent with the current standards of practice as approved by the U.S. EPA and DTSC. Field sampling methods are discussed in Section 2.2.

#### *2.6.3.5 Completeness*

Completeness is the amount of valid data obtained compared to the amount that was expected under ideal conditions. The number of valid results divided by the number of possible results, expressed as a percentage, determines the completeness of the data set. The objective for completeness is to recover at least 90 percent of the planned data to support field efforts. The formula for calculation of completeness is:

%Completeness = 100 × (number of valid results / number of expected result)

#### *2.6.3.6 Sensitivity*

Sensitivity is essentially the lowest detection limit of the method or instruments for each of the measurement parameters of interest. Technically, it is the capability of a method or instrument to discriminate between measurement responses representing different levels of the variable of interest.

The analytical laboratories will determine the minimum concentration (i.e., method detection limit, instrument detection limit, analytical reporting limit) per laboratory certification requirements set forth by the California Department of Health Services. The lowest technically feasible reporting limits will be used for the analytical methods.

## 2.7 Equipment Maintenance

Laboratory instrumentation will be examined and tested prior to being put into service and will be maintained according to the manufacturer's instructions. All laboratory instruments will be maintained as specified in the project laboratory's QA plan and according to manufacturers' instructions. Manufacturers' instructions will be followed for any additional equipment that is required for this project.



ED_013190_00000184-00035

## 2.8 Instrument Calibration

The analytical laboratory is responsible for all analytical equipment calibration and maintenance as described in its laboratory QA plan. General requirements are discussed below.

### 2.8.1 Laboratory Instruments

Analytical instruments will be calibrated in accordance with the procedures specified in the applicable method. All analytes that are reported should be present in the initial and continuing calibrations, and these calibrations must meet the acceptance criteria specified in the reference method. Records of standard preparation and instrument calibration will be maintained. Records should unambiguously trace the preparation of standards and their use in calibration and quantitation of sample results. Calibration records will be traceable to standard materials.

At the onset of analysis, instrument calibrations will be checked using all of the analytes of interest. This applies equally to multi-response analytes. At a minimum, calibration criteria will satisfy method requirements. Analyte concentrations can be determined with either calibration curves or response factors, as defined in the method. Guidance provided in SW-846 should be considered to determine appropriate evaluation procedures (U.S. EPA 1996).

### 2.8.2 Standard Solutions

Current laboratory standards will be used to calibrate laboratory equipment or to prepare samples and will be certified by National Institute of Standards and Technology, U.S. EPA, or other equivalent source. The expiration date will be established by the manufacturer, or it will be based on chemical stability, the possibility of contamination, and environmental and storage conditions. Standards will be labeled with expiration dates, and will reference primary standard sources if applicable. The laboratory will discard expired standards.

## 2.9 Data Management

The approach to data management for this project will ensure that measurement data maintain their integrity through the use of appropriate documentation procedures.

### 2.9.1 Data Reduction

The laboratory will perform in-house analytical data reduction under the direction of the laboratory QA manager. Data reduction will be conducted as follows:

- Raw data produced by the analyst will be processed and reviewed for attainment of QC criteria as outlined in this QAPP and/or established EPA methods, for overall reasonableness, and for transcription or calculations errors.
- Upon acceptance of the preliminary reports by the laboratory QA data reviewer, final reports will be generated. The turnaround for the final data reports will be negotiated with the contracted analytical laboratory.



ED_013190_00000184-00036

Laboratory data reduction procedures will be those specified in EPA SW-846 (4th edition) and those described in the laboratory SOPs. The data reduction steps will be documented, signed, and dated by the analyst.

The laboratories will maintain detailed procedures for laboratory recordkeeping to support the validity of all analytical work. Each data report package will contain the laboratories' written certification that the requested analytical method was run and that all QA/QC checks were performed.

### 2.9.2 Laboratory Data Deliverables

Analytical records will include data reports with all specified supporting information (e.g., run logs, case narratives). The amount of supporting information is determined by data validation needs and the need for the documents to stand alone. Analytical QA/QC issues that should be documented include standard traceability, frequency, and results of QC samples, such as method and instrument blanks, spiked samples, replicates, calibration check standards, and detection limit studies.

The following information will be supplied by laboratories as data deliverables to support project activities, data validation, and the documentation of data quality, including:

- Case narrative including a discussion of nonconformance and corrective actions;
- Sample data and QC data summary forms;
- COC forms, sample receipt forms, shipping documents, or tracking numbers;
- Verification of sample temperature on receipt;
- Electronically formatted data deliverable results.

### 2.9.3 Data Management Plan

Terraphase maintains a document management policy that supports project activities by creating and retaining records that document project activities in an accurate and transparent manner that will allow for reviews and data usability assessments. These records will include the following as a minimum:

- Terraphase will maintain training and certification records, which include enough detail to verify the suitability and relevance of the training and certifications. Training files will contain enough detail to support a demonstration of competency of all personnel performing project-related activities.

- Sample collection records will include sampling procedures, the names of the persons conducting the activity, sample number, sample collection points, maps and diagrams, equipment/method used, climatic conditions, and unusual observations.

- COC records document the progression of samples as they travel from the original sampling location to the laboratory and finally to their disposal or archival. These

records should contain the project name, and signatures of the sample collector, the lab custodian, and other custodians. The records should document any sample anomalies.

- Data Validation Reports will include documentation on field and lab QA/QC issues such as equipment rinsate blanks, field blanks, and sample preservation.

# 3.0 ASSESSMENT AND OVERSIGHT

## 3.1 Assessments and Response Actions

### 3.1.1 Assessments

Assessments will be used to increase the user's understanding of the activity being assessed and to provide a basis for improving that activity. Terraphase is responsible for supervising and checking that samples are collected and handled in accordance with this plan and that documentation of work is adequate and complete. Terraphase is also responsible for ensuring that the project performance satisfies the QA objectives set forth in this SSAP/QAPP.

Reports and technical correspondence will be peer-reviewed by qualified individuals before being finalized.

### 3.1.2 Response Actions

The day-to-day responsibility for assuring the quality of field and laboratory data rests with the Terraphase Project Manager and the Laboratory QA Officer. Any nonconformance with the established QC procedures will be expeditiously identified and controlled. Where procedures are not in compliance with the established protocol, corrective actions will be taken immediately.

**Field Corrective Action**

The Terraphase Project Manager will review the procedures being implemented in the field for consistency with the established protocols. Sample collection, preservation, labeling, etc., will be checked for completeness. Where procedures are not strictly in compliance with the established protocol, the deviations will be documented and corrected. Corrective actions will be defined by the Task Manager as appropriate. Upon implementation of the corrective action, the Task Manager will produce a written memo documenting field implementation. The memo will become part of the project file.

**Laboratory Corrective Action**

The Laboratory QA Officer will review the data generated to ensure that all QC samples have been run as specified in the cited method. The Laboratory QA Officer will review recoveries of LCS, matrix spike, and surrogate samples for consistency with method-specific accuracy, and RPD for matrix spike/matrix spike duplicate and blank spike/blank spike duplicate samples for consistency with method precision.

If any nonconformances in analytical methodologies or QC sample results are identified by the Laboratory QA Officer, corrective actions will be implemented immediately. Specific corrective actions are outlined in each laboratory SOP.



ED_013190_00000184-00039

### Corrective Actions Following Data Evaluation

Field and laboratory data generated for this project will be reviewed to ensure that all project objectives are met. If any nonconformances are found in the field procedures, sample collection procedures, field documentation procedures, laboratory analytical and documentation procedures, and data evaluation and quality review procedures, the impact of those nonconformances on the overall project objectives will be assessed. Appropriate actions, including resampling and reanalysis, may be recommended by the Terraphase Project Manager so that the project objectives can be accomplished.

## 3.2 Reports to Management

A sampling and analysis data report will be prepared that summarizes the results of this investigation, as described in Section 1.5.1.



ED_013190_00000184-00040

# 4.0 DATA VALIDATION AND USABILITY

## 4.1 Procedures for Data Validation

One hundred percent of the data generated as part of this investigation will be validated in accordance with data validation techniques as presented in the "Contract Laboratory Program National Functional Guidelines for Inorganic Superfund Data Review" ("National Functional Guidelines"; U.S. EPA 2010). Data validation will be performed and documented by Terraphase in a manner consistent with the National Functional Guidelines. The results of the data validation will be included in a data validation report, which will be maintained by Terraphase in the project files. The following summarizes the areas of data validation:

- narrative, cross-reference, COC, and method references
- holding times
- surrogate recoveries (as applicable)
- blank results
- sample spike recoveries (as applicable)
- duplicate sample results or duplicate spike recoveries
- laboratory control sample recoveries (as applicable)
- acceptance criteria for applicable field and laboratory QC samples
- data completeness
- compound identification and quantification

Percent recoveries for laboratory control samples, matrix spike samples, blank spike samples, and surrogates will be evaluated against laboratory-specific acceptance criteria. In addition, the RPDs for the laboratory control samples, matrix spike duplicates, and blank spike duplicates will be evaluated against laboratory-specific acceptance criteria. Laboratories will provide the acceptance criteria for each analytical method on each sample delivery group. Data will be qualified as appropriate for non-compliance with the acceptance criteria.

## 4.2 Data Qualifiers

The data validation procedures were designed to review each data set and identify biases inherent to the data set and determine its usefulness. Data validation flags are applied to those sample results that fall outside of specified tolerance limits and, therefore, did not meet the program's QA objectives. Data validation flags to be used for this project are defined in the National Functional Guidelines. Data validation flags will indicate whether results are considered anomalous, estimated, or rejected. Only rejected data are considered unusable for decision-making purposes; however, other qualified data may require further verification.

## 4.3 Data Review and Reconciliation with User Requirements

The purpose of the data quality review is to ensure that the data have been recorded, transmitted, and processed correctly. After the field work, chemical analyses, and data



ED_013190_00000184-00041

validation reports have been completed, a data quality review report will be prepared. In this report, all data generated for this project will be reconciled with the project objectives. The reviewer will determine whether the quality objectives have been met, and will calculate the data completeness for the project. The report will include an evaluation of overall precision, accuracy, completeness, representativeness, comparability, and sensitivity of the sampling data; it will include an assessment of the overall usability of the data and describe any limitations on its use; and it will summarize any corrective actions taken. The data quality review report will be included in the sampling and analysis data report.



ED_013190_00000184-00042

# 5.0 REFERENCES

U.S. Environmental Protection Agency (U.S. EPA). 1996. Test Methods for Evaluating Solid Waste, Physical/Chemical Methods. SW-846, Third Edition, Office of Solid Waste and Emergency Response. Washington, D.C.

——. 1998. EPA Requirements for Quality Assurance Project Plans for Environmental Data Operations, External Review Draft Final. EPA QA/R-5. Washington, D.C.

——. 2001. Region 9 Superfund Data Evaluation/Validation Guidance. R9QA/006.1. Region 9 Quality Assurance Office. San Francisco, California.

——. 2002. Guidance for Quality Assurance Project Plans. EPA QA/G-5. Office of Environmental Information. Washington, D.C.

——. 2006. Guidance on Systematic Planning Using the Data Quality Objectives Process. EPA QA/G-4. Office of Environmental Information. Washington, D.C.

——. 2008. USEPA Contract Laboratory Program National Functional Guidelines for Superfund Organic Data Review. USEPA-540-R-08-01. Office of Superfund Remediation and Technology Innovation. Washington, D.C.

——. 2010. USEPA Contract Laboratory Program National Functional Guidelines for Inorganic Superfund Data Review. USEPA-540-R-10-011. Office of Superfund Remediation and Technology Innovation. Washington, D.C.



ED_013190_00000184-00043

# TABLES

**Table 1**
**Sample Matrix**
Sampling and Analysis Plan and Quality Assurance Project Plan
Sims Metal Management, Redwood City, California

| Sample Location | Sample Description | Number of Samples | Matrix | Metals | PCBs |
|---|---|---|---|---|---|
| **Potentially Impacted Sediment Samples** | | | | | |
| Wharf 3 | Primary Sediment Samples | 35 | Sediment | X | X |
| Wharf 3 | Contingency Sediment Samples | 23 | Sediment | H | H |
| **Wharf 2 Background Samples** | | | | | |
| Wharf 2 | Background Sediment Samples | 12 | Sediment | X | X |
| **Wharf 4 Background Samples** | | | | | |
| Wharf 4 | Background Sediment Samples | 12 | Sediment | X | X |
| **Wharf 5 Background Samples** | | | | | |
| Wharf 5 | Background Sediment Samples | 12 | Sediment | X | X |

Notes:
bgs = below ground surface
PCBs = polychlorinated biphenyls
X = sample will be analyzed
H = sample will be placed on hold, pending the results of the analysis of the adjacent primary sediment sample transect
Metals analyses includes: California Title 22 Metals, aluminum and iron



ED_013190_00000184-00045

**Table 2**
**Analytical Laboratory Methods, Sample Requirements, and Reporting Limits**
Sampling and Analysis Plan and Quality Assurance Project Plan
Sims Metal Management, Redwood City, California

| Analyte | Matrix | Method | Container | Minimum Sample Volume | Preservation | Hold Time (days) | Reporting Limits[1] |
|---|---|---|---|---|---|---|---|
| Metals | solids | EPA 6010C | glass jar | 2 g | chill to 4 ± 2°C | 180 | 0.25 - 1 mg/kg |
| Mercury | solids | EPA 7471B | glass jar | 2 g | chill to 4 ± 2°C | 28 | 0.02 mg/kg |
| Iron and Aluminum | solids | EPA 6010C | glass jar | 2 g | chill to 4 ± 2°C | 180 | 5 mg/kg |
| PCBs (aroclors) | solids | EPA 8082A[2] | glass jar | 30 g | chill to 4 ± 2°C | 14/40[1] | 12 - 24 ug/kg |

**Notes:**
[1]reporting limits may vary depending on matrix interference and dilution
[2]sample extraction will be performed using EPA Method 3540C or EPA Method 3541
Metals = California Title 22 Metals
EPA = Environmental Protection Agency
PCBs = polychlorinated biphenyls
°C = degrees Celsius
g = grams
mg/kg = milligrams per kilogram
ug/kg = micrograms per kilogram

1 = the PCB hold time is presented as days from sample collection to extraction/days from extraction to analysis



ED_013190_00000184-00046

# FIGURES

| | | |
|---|---|---|
| **SAFETY FIRST** | CLIENT: Sims Metal Management | **Site Location Map** |
| terraphase engineering | PROJECT: Sediment Sampling and Analysis Plan | |
| | PROJECT NUMBER: **0012.001.006** | **FIGURE 1** |

File Name: Figure 1 – Site Location Map Prepared by: ptz Checked by: jrr

File: J:\GIS Backup\GIS Data\0012 Sims Metals\Sediment Investigation\Figure_2_SitePlan_0012-001-005.mxd Created by: DJR Checked by: DCR

N

SAFETY FIRST

terraphase engineering

CLIENT: Sims Metal Management

PROJECT: Sediment Sampling and Analysis Plan

PROJECT NUMBER: 0012.001.006

# Site Plan

**FIGURE 2**

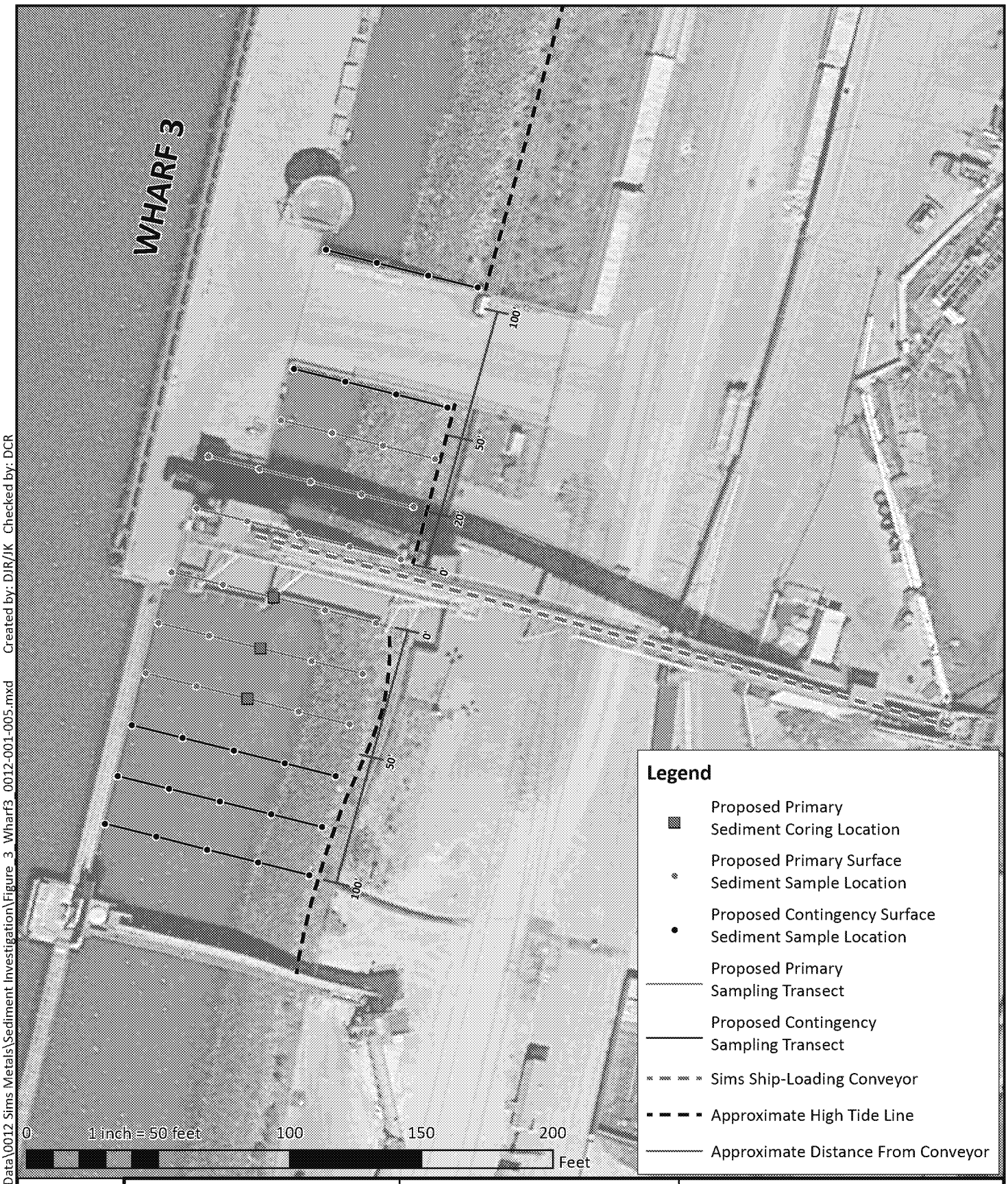


File: J:\GIS Backup\GIS Data\0012 Sims Metals\Sediment Investigation\Figure_3_Wharf3_0012-001-005.mxd Created by: DJR/JK Checked by: DCR

N

SAFETY FIRST

terraphase engineering

| | |
|---|---|
| CLIENT: Sims Metal Management | **Proposed Wharf 3 Sediment Sample Locations** |
| PROJECT: Sediment Sampling and Analysis Plan | |
| PROJECT NUMBER: 0012.001.006 | **FIGURE 3** |

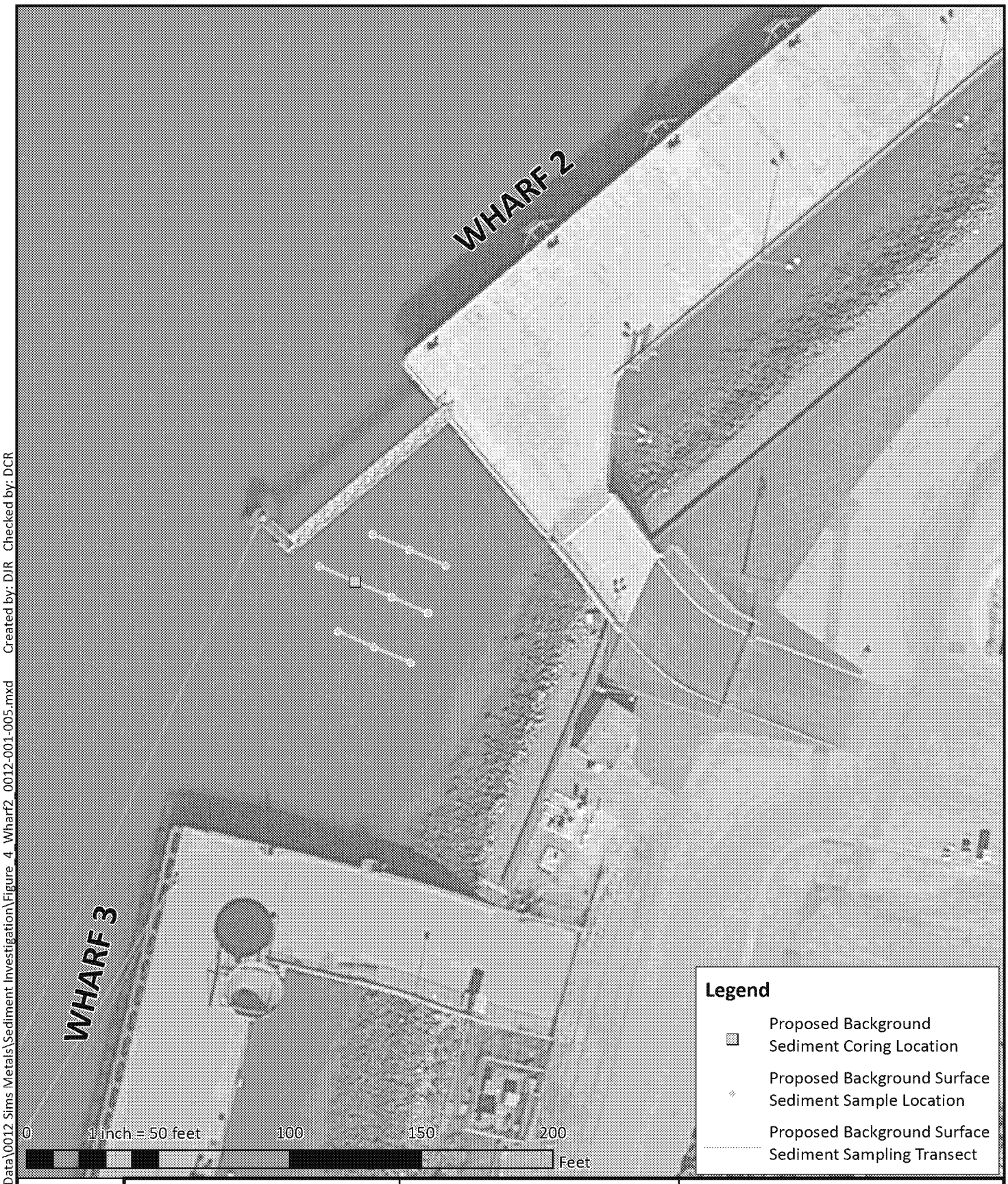


File: J:\GIS Backup\GIS Data\0012 Sims Metals\Sediment Investigation\Figure_4_Wharf2_0012-001-005.mxd Created by: DJR Checked by: DCR

N

SAFETY FIRST

terraphase engineering

CLIENT: Sims Metal Management

PROJECT: Sediment Sampling and Analysis Plan

PROJECT NUMBER: 0012.001.006

**Proposed Wharf 2 Background Sediment Sample Locations**

**FIGURE 4**

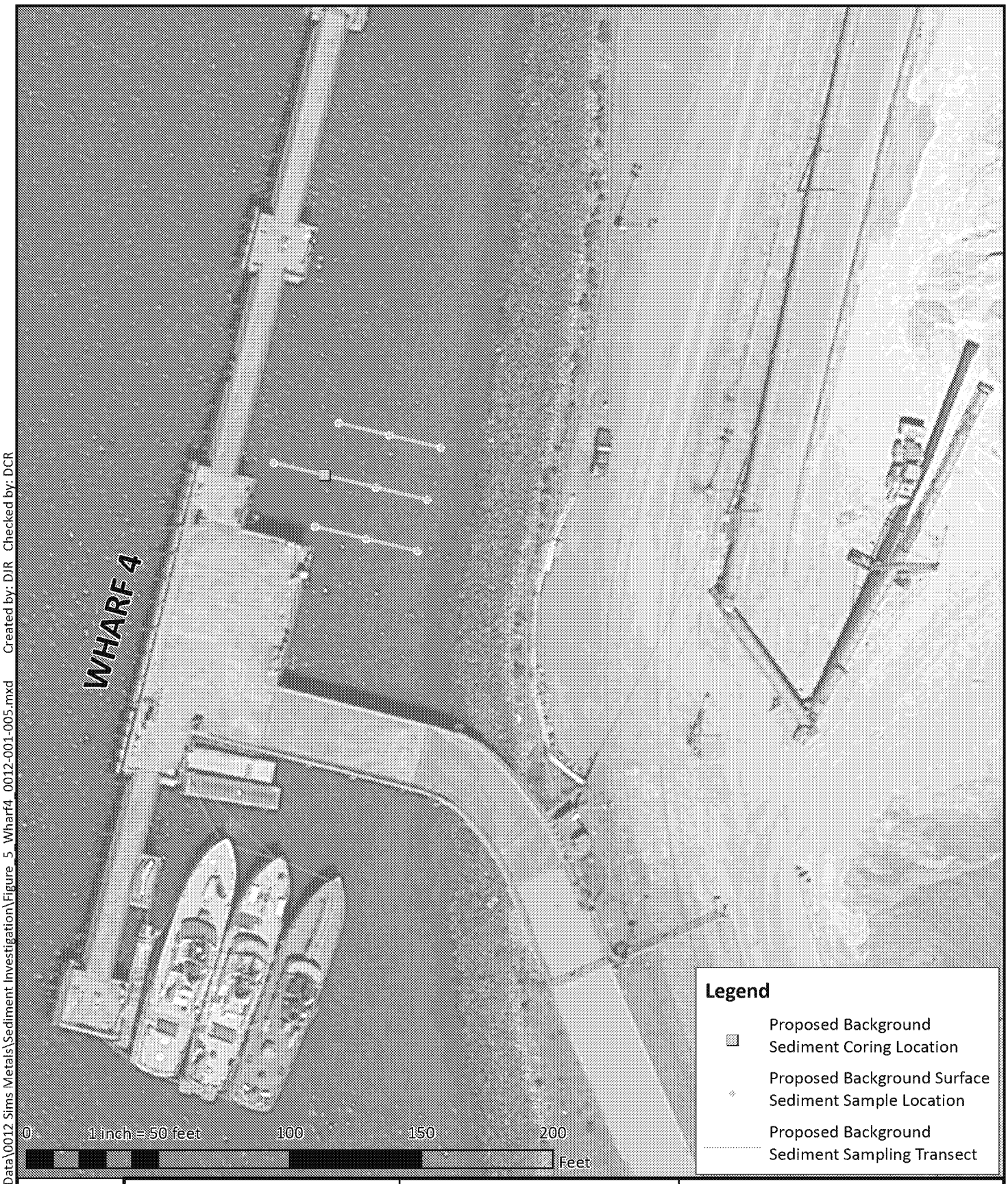


N

SAFETY FIRST

terraphase engineering

CLIENT: Sims Metal Management

PROJECT: Sediment Sampling and Analysis Plan

PROJECT NUMBER: 0012.001.006

**Proposed Wharf 4 Background Sediment Sample Locations**

**FIGURE 5**

File: J:\GIS Backup\GIS Data\0012 Sims Metals\Sediment Investigation\Figure_5_Wharf4_0012-001-005.mxd Created by: DJR Checked by: DCR

File: J:\GIS Backup\GIS Data\0012 Sims Metals\Sediment Investigation\Figure_6_Wharf5_0012-001-005.mxd Created by: DJR Checked by: DCR

N

SAFETY FIRST

terraphase engineering

CLIENT: Sims Metal Management

PROJECT: Sediment Sampling and Analysis Plan

PROJECT NUMBER: 0012.001.006

**Proposed Wharf 5 Background Sediment Sample Locations**

**FIGURE 6**

**APPENDIX A**
CONSENT DECREE

---

ELLEN M. MAHAN
Deputy Section Chief
Environmental Enforcement Section
Environment and Natural Resources Division
U.S. Department of Justice
PATRICIA L. HURST
Senior Counsel
Environmental Enforcement Section
P.O. Box 7611
Washington, D.C. 20044
(202) 307 1242 (telephone); (202) 616-2427 (facsimile)
Patricia.Hurst@usdoj.gov
Attorneys for Plaintiff United States of America

IN THE UNITED STATES DISTRICT COURT
FOR THE NORTHERN DISTRICT OF CALIFORNIA

| | |
|---|---|
| UNITED STATES OF AMERICA,<br><br>Plaintiff,<br><br>v.<br><br>SIMS GROUP USA CORPORATION<br><br>Defendant. | Civil Action No. [_____]<br><br>**CONSENT DECREE** |

TABLE OF CONTENTS

I. JURISDICTION AND VENUE . . . . . 4
II. APPLICABILITY . . . . . 4
III. DEFINITIONS . . . . . 5
IV. CIVIL PENALTY . . . . . 7
V. COMPLIANCE REQUIREMENTS . . . . . 8
VI. REPORTING REQUIREMENTS . . . . . 14
VII. STIPULATED PENALTIES . . . . . 15
VIII. FORCE MAJEURE . . . . . 19
IX. DISPUTE RESOLUTION . . . . . 21
X. INFORMATION COLLECTION AND RETENTION . . . . . 23
XI. EFFECT OF SETTLEMENT/RESERVATION OF RIGHTS . . . . . 26
XII. COSTS . . . . . 27
XIII. NOTICES . . . . . 28
XIV. EFFECTIVE DATE . . . . . 29
XV. RETENTION OF JURISDICTION . . . . . 29
XVI. MODIFICATION . . . . . 29
XVII. TERMINATION . . . . . 30
XVIII. PUBLIC PARTICIPATION . . . . . 31
XIX. SIGNATORIES/SERVICE . . . . . 31
XX. INTEGRATION . . . . . 32
XXI. FINAL JUDGMENT . . . . . 32

WHEREAS, Plaintiff United States of America, on behalf of the United States Environmental Protection Agency ("EPA"), has filed a complaint in this action concurrently with this Consent Decree alleging that Defendant Sims Group USA Corporation, which does business as Sims Metal Management ("Sims" or "Defendant"), violated Sections 301 and 402 of the Clean Water Act ("CWA" or "Act"), 33 U.S.C. §§ 1311 and 1342.

WHEREAS, Sims, a Delaware corporation, owns a metal recycling facility ("Facility") located at the Port of Redwood City ("Port"), in San Mateo County, California. At the Facility, Sims receives, sorts, separates, shreds, and stores bulk metal scrap (ferrous and non-ferrous) for sale and export. These activities occur on a 13-acre parcel of land located east of a public right-of-way at the Port known as Herkner Road. Sims, along with other unrelated bulk cargo shippers, also conducts industrial activity at a Port-owned wharf ("Wharf 3") located on the west side of Herkner Road. Specifically, Sims operates a ship-loading conveyor ("Conveyor") to deliver shredded specification-grade ferrous steel scrap into the hulls of ships berthed at Wharf 3. Wharf 3 is located along the bank and shipping channel of Redwood Creek. The initial portion of the Conveyor is located on the Facility, but the remainder of the Conveyor spans Herkner Road and a concrete pier and apron located on pilings above the edge of Redwood Creek. The concrete apron is located directly beneath the Conveyor and extends from the shoreline to the edge of Wharf 3. The primary purpose of the apron is to catch material that may fall from the Conveyor during ship-loading operations. The concrete apron was installed in 1991, and was improved in 2002 to include additional screening material along the sides. Other Port tenants use Wharf 3 (but not the Conveyor) for loading and unloading of bulk materials, including bauxite and gypsum.

WHEREAS, the Complaint alleges, among other things, that Sims violated the Act and its implementing regulations, and General Storm Water Permit issued thereunder, by: (1) discharging materials potentially containing pollutants during the operation of its Conveyor directly or in storm water to Redwood Creek; (2) allowing water used for dust control at the Facility to overspray onto Herkner Road, potentially washing pollutants on the road into the Port's municipal separate storm sewer system; and (3) discharging storm water to Redwood Creek, in the form of runoff from the Conveyor and concrete apron, without documentation of best management practices and quarterly visual observations in the Facility's storm water pollution prevention plan, and without reference to this intermittent use area in the Facility's storm water sampling and monitoring plan.

WHEREAS, on December 16, 2011, EPA issued a Findings of Violation, Order for Compliance, and Request for Information ("Order") to Sims pursuant to Section 309(a) of the Act, 33 U.S.C. § 1319(a). The Order contained allegations similar to those set forth in the Complaint and required Sims to provide EPA with certain information relating to its operations at the Facility; to implement a variety of corrective actions to eliminate unauthorized discharges; and to conduct storm water sampling at drain inlets located on Herkner Road that could be affected by Sims' operations in the Port-owned, non-exclusive use area to the west of the Facility. Sims claims that it contains all storm water that falls directly on the Facility to prevent the discharge of pollutants in storm water from the Facility to waters of the United States; and claims that it prevents the discharge of pollutants and other wastewater directly from the Facility to waters of the United States. Sims also claims that, prior to full enclosure of the Conveyor in 2012, the concrete apron installed beneath the Conveyor and other best management practices

employed by Sims acted to substantially contain incidental spillage that may have occurred during ship-loading operations.

WHEREAS, Sims timely completed all obligations of the Order to the satisfaction of EPA and EPA terminated the Order, as confirmed by a letter to Sims dated August 26, 2013.

WHEREAS, Sims claims it is in compliance with all applicable requirements of the Act and the General Storm Water Permit.

WHEREAS, Sims neither admits nor denies the specific factual allegations, and does not admit to any liability, as alleged in the Order for Compliance, the Complaint or this Consent Decree.

WHEREAS, the Plaintiff takes no position and may disagree with the claims made above by Sims in these Recitals.

WHEREAS, the Parties recognize, and the Court by entering this Consent Decree finds, that this Consent Decree has been negotiated by the Parties in good faith and will avoid litigation between the Parties and that this Consent Decree is fair, reasonable, and in the public interest.

NOW, THEREFORE, before the taking of any testimony, without the adjudication or admission of any issue of fact or law, except as provided in Section I, and with the consent of the Parties, IT IS HEREBY ADJUDGED, ORDERED, AND DECREED as follows:

## I. JURISDICTION AND VENUE

1. This Court has jurisdiction over the subject matter of this action, pursuant to 28 U.S.C. §§ 1331, 1345, and 1355, and Section 309(b) of the Act, 33 U.S.C.§ 1319(b), and over the Parties. Venue lies in this District pursuant to Section 309(b) of the Act, 33 U.S.C.§ 1319(b), and 28 U.S.C. §§ 1391(b) and (c), and 1395(a), because Sims resides and is located in this judicial district and because the violations alleged in the Complaint are alleged to have occurred in this judicial district. For purposes of this Decree, or any action to enforce this Decree, Sims consents to the Court's jurisdiction over this Decree and any such action and over Sims and consents to venue in this judicial district.

2. For purposes of this Consent Decree, Sims agrees that the Complaint states claims which, if true, are claims upon which relief may be granted pursuant to Sections 301(a) and 402 of the Act, 33 U.S.C. §§ 1311(a) and 1342.

## II. APPLICABILITY

3. The obligations of this Consent Decree apply to and are binding upon the United States, and upon Sims and any successors, assigns, or other entities or persons otherwise bound by law.

4. No transfer of its leasehold interest or operation of the Facility by Sims, whether in compliance with the procedures of this Paragraph or otherwise, shall relieve Sims of its obligation to ensure that the terms of the Decree are implemented. At least 30 Days prior to such transfer , Sims shall provide a copy of this Consent Decree to the proposed transferee and shall simultaneously provide written notice of the prospective transfer, together with a copy of

the proposed written agreement to EPA Region 9, and the United States Department of Justice, in accordance with Section XIII of this Decree (Notices). Any attempt by Sims to transfer its leasehold interest or operation of the Facility without complying with this Paragraph constitutes a violation of this Decree.

5. Sims shall provide a copy of this Consent Decree to all officers and managers of Sims whose duties might reasonably include compliance with any substantive provision of this Decree, as well as to any general contractor retained to perform work required under this Consent Decree. Sims shall condition any such contract upon performance of the work in conformity with the terms of this Consent Decree.

6. In any action to enforce this Consent Decree, Sims shall not raise as a defense the failure by any of its officers, directors, employees, agents, or contractors to take any actions necessary to comply with the provisions of this Consent Decree.

## III. DEFINITIONS

7. Terms used in this Consent decree that are defined in the Act or in regulations promulgated pursuant to the Act shall have the meanings assigned to them in the Act or such regulations, unless otherwise provided in this Decree. Whenever the terms set forth below are used in this Consent Decree, the following definitions shall apply:

a. "Clean Water Act" or "CWA" or "Act" shall mean the Federal Water Pollution Control Act, as amended, 33 U.S.C. §§ 1251-1387.

b. "Complaint" shall mean the complaint filed by the United States in this action.

c. "Consent Decree" or "Decree" shall mean this Decree and all appendices attached hereto.

d. "Day" shall mean a calendar day unless expressly stated to be a business day. In computing any period of time under this Consent Decree, where the last day would fall on a Saturday, Sunday, or federal holiday, the period shall run until the close of business of the next business day.

e. "Defendant" or "Sims" shall mean Sims Group USA Corporation, dba Sims Metal Management.

f. "Effective Date" shall have the definition provided in Section XIV.

g. "EPA" shall mean the United States Environmental Protection Agency and any of its successor departments or agencies.

h. "Facility" shall mean Sims' metal recycling Facility located at the Port of Redwood City, California.

i. "Paragraph" shall mean a portion of this Decree identified by an arabic numeral.

j. "Parties" shall mean the United States and Sims.

k. "Permit" or "General Storm Water Permit" shall mean the NPDES permit No. CAS000001 issued by the State of California through its State Water Resources Control Board for storm water associated with industrial activity, Water Quality Order No. 97-03-DWQ.

l. "Section" shall mean a portion of this Decree identified by a roman numeral.

m. "State" shall mean the State of California.

n. "United States" or "Federal Plaintiff" shall mean the United States of America, acting on behalf of EPA.

## IV. CIVIL PENALTY

8. Within 30 Days after the Effective Date of this Consent Decree, Sims shall pay the sum of One Hundred Eighty-Nine Thousand, Five Hundred Dollars ($189,500.00) as a civil penalty, together with interest accruing on a daily basis from and after the date on which the Consent Decree is lodged with the Court, at the rate specified in 28 U.S.C. § 1961 as of the date of lodging.

9. Sims shall pay the civil penalty due by FedWire Electronic Funds Transfer ("EFT") to the U.S. Department of Justice in accordance with written instructions to be provided to Sims, following entry of the Consent Decree, by the Financial Litigation Unit of the U.S. Attorney's Office for the Northern District of California, Federal Courthouse, 450 Golden Gate Avenue, San Francisco, CA 94102, (415) 436-7200. At the time of payment, Sims shall send a copy of the EFT authorization form and the EFT transaction record, together with a transmittal letter, which shall state that the payment is for the civil penalty owed pursuant to the Consent Decree in United States v. Sims USA Group Corporation, and shall reference the civil action number and DOJ case number *90-5-1-1-10706*, to the United States in accordance with Section XIII of this Decree (Notices); by email to acctsreceivable.CINWD@epa.gov; and by mail to:

EPA Cincinnati Finance Office
26 Martin Luther King Drive
Cincinnati, Ohio 45268

10. Sims shall not deduct any penalties paid under this Decree pursuant to this Section or Section VII (Stipulated Penalties) in calculating its federal income tax.

## V. COMPLIANCE REQUIREMENTS

11. Sims shall comply with all applicable CWA requirements, including those set forth in the General Storm Water Permit.

12. Sediment Sampling and Analysis Plan: Within 90 days of the Effective Date of this Consent Decree, Sims shall submit for EPA's review and approval a draft Sediment Sampling and Analysis Plan (SSAP) to characterize the marine sediment within Redwood Creek to determine if the area underneath and proximate to Sims' ship-loading Conveyor located at Wharf 3 at the Port of Redwood City has been impacted by total metals and PCBs associated with Sims' scrap metal ship-loading activities. This SSAP shall, at a minimum:

a. Be prepared by a qualified independent consultant.

b. Conform to or be consistent with EPA's Quality Assurance Guidance G-5 which can be found at the following website: http://www.epa.gov/quality/qs-docs/g5-final.pdf.

c. Utilize EPA-approved methods for metals (including mercury) and PCBs.

d. Investigate the area 50 feet to either side of the Conveyor, between the mean high tide line and Wharf 3. Should the investigation indicate that scrap metal associated with Sims' operations extends beyond the 50 foot extent of the investigation area on either side of the Conveyor, Sims shall expand the investigation area laterally along the shoreline, incrementally, at a minimum of 50

foot intervals until evidence of scrap metal associated with Sims' operations is no longer observed.

e. Establish background concentrations of metals and PCBs within Redwood Creek sediments by collecting sediment samples from locations outside the area of observed scrap metal impacts as identified in subparagraph (d), including but not limited to the areas between the mean high tide line and Wharf 2 and between the mean high tide line and Wharf 4. Given the long term, historical industrial uses of the Channel, for purposes of this Consent Decree, "background concentrations" shall be assumed to be the concentrations of metals and PCBs that are present in the sediments due to industrial activities or other sources unrelated to Sims. Sims shall collect a sufficient number of sediment samples from each area to establish a statistically reliable basis for the identification of background concentrations.

f. Identify a statistical analysis method that Sims will employ to determine if the population of samples taken underneath and proximate to the Conveyor in accordance with subparagraph (g) below show concentrations of metals and PCBs at levels statistically different from the population of samples taken in accordance with subparagraph (e) above to determine "background concentrations" of these constituents.

g. Sims shall collect a sufficient number of sediment samples from each side of the Conveyor within the area of observed scrap metal impacts associated with Sims' ship-loading activities, as determined according to subparagraph (d), and shall compare those sample results to the "background concentrations" established

pursuant to subparagraph (e). If the concentration of any constituent associated with Sims' operations exceeds the background concentration of that constituent at the outermost edges of the area of observed scrap metal impacts associated with Sims' operations, Sims shall extend its sediment investigation incrementally on either side of the Conveyor until the concentrations of metals and PCBs is no longer statistically distinguishable from "background concentrations" of metals and PCBs determined pursuant to subparagraph (e) above.

h. Be designed so that all sediment characterization work, including laboratory analysis, statistical analysis, and delineation, is completed within 120 days of EPA's approval of the SSAP.

13. Approval of Sediment Sampling and Analysis Plan. EPA shall timely review the draft SSAP and shall: a) approve the SSAP; b) approve the SSAP upon specified conditions; c) approve part of the SSAP and disapprove the remainder; or d) disapprove the SSAP. The basis for any conditional approval or disapproval shall be clearly stated by EPA.

14. If the SSAP is approved pursuant to Paragraph 13.a, Sims shall commence work and take all actions required by the SSAP in accordance with the schedules and requirements of the SSAP as approved. If the SSAP is conditionally approved or approved only in part, pursuant to Paragraph 13.b or 13.c., Sims shall, upon written direction from EPA, take all actions required by the SSAP that EPA determines are technically severable from any disapproved portions, subject to Sims' right to dispute only the specified conditions or the disapproved portions, under Section IX of this Decree (Dispute Resolution).

15. If the SSAP is disapproved in whole or in part pursuant to Paragraph 13.c or 13.d, Sims shall, within 45 Days or such other time as the Parties agree to in writing, correct all deficiencies and resubmit the SSAP for approval, in accordance with the preceding Paragraphs. If the SSAP resubmission is approved in whole or in part, Sims shall proceed in accordance with the preceding Paragraph.

16. Subject to Sims' right to invoke dispute resolution, any stipulated penalties applicable to the original submission, as provided in Section VII of this Decree, shall accrue during the 45-Day period or other specified period for resubmittal, but shall not be payable unless the resubmission is untimely or is disapproved in whole or in part; provided that, if the original submission was so deficient as to constitute a material breach of Sims' obligations under this Decree, the stipulated penalties applicable to the original submission shall be due and payable notwithstanding any subsequent resubmission.

17. If a resubmitted SSAP is disapproved in whole or in part, EPA may again require Sims to correct any deficiencies, in accordance with the preceding Paragraphs, subject to Sims' right to invoke Dispute Resolution and the right of EPA to seek stipulated penalties as provided in the preceding Paragraphs.

18. Sediment Remediation Plan. Should the SSAP sediment characterization work conducted by Sims pursuant to Paragraph 12 indicate that its ship-loading operations have resulted in sediment concentrations of heavy metals or PCBs that exceed background concentrations or any applicable sediment quality standard, whichever is higher, on a statistically significant basis, Sims shall submit for EPA's review and approval a draft Sediment Remediation

Plan (SRP) within 90 Days of completing the work required by the SSAP describing how Sims intends to remediate the sediment within the SSAP sampling area.

19. The SRP shall include an evaluation of various alternatives for removal of scrap metal and PCBs from the sediment in the SSAP sampling area, such as by dredging. The SRP shall also consider the potential environmental impacts associated with disturbance of the sediment, and Sims may propose to leave the sediments and agglomerated scrap metal in place if supported by the results of an ecological risk assessment. The SRP shall contain an evaluation of alternatives for recycling or disposal of any scrap metal removed from the sediment and for disposition of any sediment that is removed. The SRP shall also contain a schedule and estimated timetable for obtaining all Federal, State and local permits required for the SRP.

20. Approval of Sediment Remediation Plan. After EPA's timely review of the draft SRP, EPA shall: a) approve the SRP; b) approve the SRP upon specified conditions; c) approve part of the SRP and disapprove the remainder; or d) disapprove the SRP. The basis for any conditional approval or disapproval shall be clearly stated by EPA.

21. If the SRP is approved pursuant to Paragraph 20.a, Sims shall commence work and take all actions required by the SRP in accordance with the schedules and requirements of the SRP as approved, and complete all work under the SRP within 12 months of the SRP's approval, as may be extended under Paragraph 26. If the SRP is conditionally approved or approved only in part, pursuant to Paragraph 20.b or 20.c, Sims shall, upon written direction from EPA, take all actions required by the SRP that EPA determines are technically severable from any disapproved portions in accordance with the applicable schedules and requirements of

the SRP, subject to Sims' right to dispute only the specified conditions or the disapproved portions under Section IX of this Decree (Dispute Resolution).

22. If the SRP is disapproved in whole or in part pursuant to Paragraph 20.c or 20.d, Sims shall, within 45 Days or such other time as the Parties agree to in writing, correct all deficiencies and resubmit the SRP for approval, in accordance with the preceding Paragraphs. If the SRP resubmission is approved in whole or in part, Sims shall proceed in accordance with the preceding Paragraph.

23. Subject to Sims' right to invoke dispute resolution, any stipulated penalties applicable to the original submission, as provided in Section VII of this Decree, shall accrue during the 45-Day period or other specified period , but shall not be payable unless the resubmission is untimely or is disapproved in whole or in part; provided that, if the original submission was so deficient as to constitute a material breach of Sims' obligations under this Decree, the stipulated penalties applicable to the original submission shall be due and payable notwithstanding any subsequent resubmission.

24. If a resubmitted SRP is disapproved in whole or in part, EPA may again require Sims to correct any deficiencies, in accordance with the preceding Paragraphs, subject to Sims' right to invoke Dispute Resolution and the right of EPA to seek stipulated penalties as provided in the preceding Paragraphs.

25. Not later than 30 days of completing the work under the SRP, Sims shall certify to EPA that sediment remediation has been completed in accordance with the requirements of the approved SRP.

26. Permits. Where any compliance obligation under this Section requires Sims to obtain federal, state, or local permits or approvals, Sims shall submit timely and complete applications and take all other actions necessary to obtain all such permits or approvals. Sims may seek relief under the provisions of Section VIII of this Consent Decree (Force Majeure) for any delay in the performance of any such obligation resulting from a failure to obtain, or a delay in obtaining, any permit or approval required to fulfill such obligation, if Sims has submitted timely and complete applications and has taken all other actions necessary to obtain all such permits or approvals.

## VI. REPORTING REQUIREMENTS

27. Reports of Permit Violations. If Sims violates any requirement of the Permit, except a notification or reporting requirement, related to the ship-loading area, Sims shall notify the United States and the California Regional Water Quality Control Board, San Francisco Bay Region, of such violation in accordance with Section XIII of this Consent Decree (Notices). Nothing in this Paragraph or the following Paragraph relieves Sims of its obligation to provide the notice required by Section VIII of this Consent Decree (Force Majeure).

28. Whenever any violation of this Consent Decree or the Permit, or other event affecting Sims' performance under this Decree, may pose an imminent threat to the public health or welfare or the environment, Sims shall notify EPA and the California Regional Water Quality Control Board, San Francisco Bay Region, orally or by electronic or facsimile transmission as soon as possible, but no later than 24 hours after Sims first knew of the violation or event. This procedure is in addition to the requirements set forth in the preceding Paragraph.

29. All reports shall be submitted to the persons designated in Section XIII of this Consent Decree (Notices).

30. Each report submitted by Sims under this Section shall be signed by an official of the submitting party and include the following certification:

> I certify under penalty of law that this document and all attachments were prepared under my direction or supervision in accordance with a system designed to assure that qualified personnel properly gather and evaluate the information submitted. Based on my inquiry of the person or persons who manage the system, or those persons directly responsible for gathering the information, the information submitted is, to the best of my knowledge and belief, true, accurate, and complete. I am aware that there are significant penalties for submitting false information, including the possibility of fine and imprisonment for knowing violations.

This certification requirement does not apply to emergency or similar notifications where compliance would be impractical.

31. The reporting requirements of this Consent Decree do not relieve Sims of any reporting obligations required by the Act or implementing regulations, or by any other federal, state, or local law, regulation, permit, or other requirement.

32. Any information provided by Sims pursuant to this Consent Decree may be used by the United States in any civil or administrative proceeding to enforce the provisions of this Consent Decree and as otherwise permitted by law.

## VII. STIPULATED PENALTIES

33. Sims shall be liable for stipulated penalties to the United States for violations of this Consent Decree as specified below, unless excused under Section VIII (Force Majeure). A violation includes failing to perform any obligation required by the terms of this

Decree, including any work plan or schedule approved under this Decree, according to all applicable requirements of this Decree and within the specified time schedules established by or approved under this Decree, as such schedules may be modified by agreement of the Parties without need for approval by the Court.

34. Late Payment of Civil Penalty

If Defendant fails to pay the civil penalty required to be paid under Section IV of this Decree (Civil Penalty) when due, Defendant shall pay a stipulated penalty of $2,000 per Day for each Day that the payment is late.

35. Non-Compliance with Injunctive Relief

a. The following stipulated penalties shall accrue per Day for each day Sims fails to submit the SSAP and/or SRP by the deadlines established in Paragraphs 12 and 18 above:

| Penalty Per Violation Per Day | Period of Noncompliance |
|---|---|
| $1,000 | 1st through 14th Day |
| $2,000 | 15th through 30th Day |
| $3,000 | 31st Day and beyond |

b. The following stipulated penalties shall accrue per Day for each day Sims fails to complete the work required by the EPA-approved SSAP and/or Sediment Remediation Plan within the deadlines established in the SSAP and Sediment Remediation Plan:

| Penalty Per Violation Per Day | Period of Noncompliance |
|---|---|
| $1,000 | 1st through 14th Day |
| $2,000 | 15th through 30th Day |
| $3,000 | 31st Day and beyond |

36. Reporting Requirements. The following stipulated penalties shall accrue per violation per Day for each violation of the reporting requirements of Section VI of this Consent Decree:

| Penalty Per Violation Per Day | Period of Noncompliance |
|---|---|
| $250 | 1st through 14th Day |
| $500 | 15th through 30th Day |
| $750 | 31st Day and beyond |

37. Stipulated penalties under this Section shall begin to accrue on the Day after performance is due or on the Day a violation occurs, whichever is applicable, and shall continue to accrue until performance is satisfactorily completed or until the violation ceases. Stipulated penalties shall accrue simultaneously for separate violations of this Consent Decree.

38. Subject to Sims' right to invoke dispute resolution, Sims shall pay any stipulated penalty within 30 Days of receiving the United States' written demand.

39. The United States may in the unreviewable exercise of its discretion, reduce or waive stipulated penalties otherwise due it under this Consent Decree.

40. Stipulated penalties shall continue to accrue as provided in Paragraph 36, during any Dispute Resolution, but need not be paid until the following:

a. If the dispute is resolved by agreement or by a decision of EPA that is not appealed to the Court, Sims shall pay accrued penalties determined to be owing, together with interest, to the United States within 30 Days of the effective date of the agreement or the receipt of EPA's decision or order.

b. If the dispute is appealed to the Court and the United States prevails in whole or in part, Sims shall pay all accrued penalties determined by the Court to be owing, together with interest, within 60 Days of receiving the Court's decision or order, except as provided in subparagraph (c) below.

c. If any Party appeals the District Court's decision, Sims shall pay all accrued penalties determined to be owing, together with interest, within 15 Days of receiving the final appellate court decision.

41. Sims shall pay stipulated penalties owing to the United States in the manner set forth and with the confirmation notices required by Paragraph 9, except that the transmittal letter shall state that the payment is for stipulated penalties and shall state for which violation(s) the penalties are being paid.

42. If Sims fails to pay stipulated penalties according to the terms of this Consent Decree, Sims shall be liable for interest on such penalties, as provided for in 28 U.S.C.§ 1961, accruing as of the date payment became due. Nothing in this Paragraph shall be construed to limit the United States from seeking any remedy otherwise provided by law for Sims' failure to pay any stipulated penalties.

43. Subject to the provisions of Section XI of this Consent Decree (Effect of Settlement/Reservation of Rights), the stipulated penalties provided for in this Consent Decree shall be in addition to any other rights, remedies, or sanctions available to the United States for Sims' violation of this Consent Decree or applicable law. Where a violation of this Consent Decree is also a violation of the CWA, Defendant shall be allowed a credit, for any stipulated penalties paid, against any statutory penalties imposed for such violation.

## VIII. FORCE MAJEURE

44. "Force majeure," for purposes of this Consent Decree, is defined as any event arising from causes beyond the reasonable control of Sims, of any entity controlled by Sims, or of Sims' contractors, that delays or prevents the performance of any obligation under this Consent Decree despite Sims' best efforts to fulfill the obligation. The requirement that Sims exercise "best efforts to fulfill the obligation" includes using best efforts to anticipate any potential force majeure event and best efforts to address the effects of any such event (a) as it is occurring and (b) after it has occurred to prevent or minimize any resulting delay to the greatest extent possible. "Force Majeure" does not include Defendant's financial inability to perform any obligation under this Consent Decree.

45. If any event occurs or has occurred that may delay the performance of any obligation under this Consent Decree, whether or not caused by a force majeure event, Sims shall provide notice orally or by electronic or facsimile transmission to EPA Region 9 within 5 business days of when Sims first knew that the event might cause a delay. Within 14 business days thereafter, Sims shall provide in writing to EPA an explanation and description of the reasons for the delay; the anticipated duration of the delay; all actions taken or to be taken to prevent or minimize the delay; a schedule for implementation of any measures to be taken to prevent or mitigate the delay or the effect of the delay; Sims' rationale for attributing such delay to a force majeure event if it intends to assert such a claim; and a statement as to whether, in the opinion of Sims, such event may cause or contribute to an endangerment to public health or welfare or the environment. Sims shall include with any notice all available documentation supporting the claim that the delay was attributable to a force majeure event. Failure to comply

with the above requirements shall preclude Sims from asserting any claim of force majeure for that event for the period of time of such failure to comply, and for any additional delay caused by such failure. Sims shall be deemed to know of any circumstance of which Sims, any entity controlled by Sims, or Sims' contractors knew or should have known.

46. If EPA agrees that the delay or anticipated delay is attributable to a force majeure event, the time for performance of the obligations under this Consent Decree that are affected by the force majeure event will be extended by EPA for such time as is necessary to complete those obligations. An extension of the time for performance of the obligations affected by the force majeure event shall not, of itself, extend the time for performance of any other obligation. EPA will notify Sims in writing of the length of the extension, if any, for performance of the obligations affected by the force majeure event.

47. If EPA does not agree that the delay or anticipated delay has been or will be caused by a force majeure event, EPA will notify Sims in writing of its decision.

48. If Sims elects to invoke the dispute resolution procedures set forth in Section IX (Dispute Resolution), it shall do so no later than 30 days after receipt of EPA's notice. In any such proceeding, Sims shall have the burden of demonstrating by a preponderance of the evidence that the delay or anticipated delay has been or will be caused by a force majeure event, that the duration of the delay or the extension sought was or will be warranted under the circumstances, that best efforts were exercised to avoid and mitigate the effects of the delay, and that Sims complied with the requirements of Paragraphs 45 and 46, above. If Sims carries this burden, the delay at issue shall be deemed not to be a violation by Sims of the affected obligation of this Consent Decree identified to EPA.

## IX. DISPUTE RESOLUTION

49. Unless otherwise expressly provided for in this Consent Decree, the dispute resolution procedures of this Section shall be the exclusive mechanism to resolve disputes arising under or with respect to this Consent Decree. Sims' failure to seek resolution of a dispute under this Section shall preclude Sims from raising any such issue as a defense to an action by the United States to enforce any obligation of Sims arising under this Decree.

50. Informal Dispute Resolution. Any dispute subject to Dispute Resolution under this Consent Decree shall first be the subject of informal negotiations. The dispute shall be considered to have arisen when Sims sends the United States a written Notice of Dispute. Such Notice of Dispute shall state clearly the matter in dispute. The period of informal negotiations shall not exceed 45 Days from the date the dispute arises, unless that period is modified by written agreement. If the Parties cannot resolve a dispute by informal negotiations, then the position advanced by the United States shall be considered binding unless, within 45 Days after the conclusion of the informal negotiation period, Sims invokes formal dispute resolution procedures as set forth below, or the Parties agree in writing to extend the deadline.

51. Formal Dispute Resolution. Sims shall invoke formal dispute resolution procedures, within the time period provided in the preceding Paragraph, by serving on the United States a written Statement of Position regarding the matter in dispute. The Statement of Position shall include, but need not be limited to, any factual data, analysis, or opinion supporting Sims' position and any supporting documentation relied upon by Sims.

52. The United States shall serve its Statement of Position within 45 Days of receipt of Sims' Statement of Position. The United States' Statement of Position shall include,

but need not be limited to, any factual data, analysis, or opinion supporting that position and any supporting documentation relied upon by the United States. The United States' Statement of Position shall be binding on Sims, unless Sims files a motion for judicial review of the dispute in accordance with the following Paragraph.

53. Sims may seek judicial review of the dispute by filing with the Court and serving on the United States, in accordance with Section XIII of this Consent Decree (Notices), a motion requesting judicial resolution of the dispute. The motion must be filed within 30 Days of receipt of the United States' Statement of Position pursuant to the preceding Paragraph. The motion shall contain a written statement of Sims' position on the matter in dispute, including any supporting factual data, analysis, opinion, or documentation, and shall set forth the relief requested and any schedule within which the dispute must be resolved for orderly implementation of the Consent Decree.

54. The United States shall respond to Sims' motion within the time period allowed by the Local Rules of this Court. Sims may file a reply memorandum, to the extent permitted by the Local Rules.

55. Standard of Review

a. Disputes Concerning Matters Accorded Record Review. Except as otherwise provided in this Consent Decree, in any dispute brought under Paragraph 51 pertaining to the adequacy or appropriateness of the SSAP or Sediment Remediation Plan, procedures to implement the SSAP or Sediment Remediation Plan, schedules or any other items requiring approval by EPA under this Consent Decree; the adequacy of the performance of work undertaken

pursuant to this Consent Decree; and all other disputes that are accorded review on the administrative record under applicable principles of administrative law, Sims shall have the burden of demonstrating, based on the administrative record, that the position of the United States is arbitrary and capricious or otherwise not in accordance with law.

b. Other Disputes. Except as otherwise provided in this Consent Decree, in any other dispute brought under Paragraph 51, Sims shall bear the burden of demonstrating that its position complies with this Consent Decree, and better furthers the objectives of the Consent Decree.

56. The invocation of dispute resolution procedures under this Section shall not, by itself, extend, postpone, or affect in any way any obligation of Sims under this Consent Decree, unless and until final resolution of the dispute so provides. Stipulated penalties with respect to the disputed matter shall continue to accrue from the first Day of noncompliance, but payment shall be stayed pending resolution of the dispute as provided in Paragraph 40. If Sims does not prevail on the disputed issue, stipulated penalties shall be assessed and paid as provided in Section VII (Stipulated Penalties).

## X. INFORMATION COLLECTION AND RETENTION

57. The United States and its representatives, including attorneys, contractors, and consultants, shall have the right of entry into any facility covered by this Consent Decree, at all reasonable times, upon presentation of credentials, to:

a. monitor the progress of activities required under this Consent Decree;

b. verify any data or information submitted to the United States in accordance with the terms of this Consent Decree;

c. obtain samples and, upon request, splits of any samples taken by Sims or its representatives, contractors, or consultants;

d. obtain documentary evidence, including photographs and similar data,; and

e. assess Sims' compliance with this Consent Decree.

58. Upon request, Sims shall provide EPA or its authorized representatives splits of any samples taken by Sims, including those taken pursuant to the terms of this Consent Decree. Upon request, EPA shall provide Sims splits of any samples taken by EPA.

59. Until three years after the termination of this Consent Decree, Sims shall retain, and shall instruct its contractors and agents to preserve, all non-identical copies of all material documents, records, or other information (including documents, records, or other information in electronic form) in its or its contractors' or agents' possession or control, or that come into its or its contractors' or agents' possession or control, and that relate in any manner to Sims' performance of its obligations under this Consent Decree. This information-retention requirement shall apply regardless of any contrary corporate or institutional policies or procedures. At any time during this information-retention period, upon request by the United States, Sims shall provide copies of any documents, records, or other information required to be maintained under this Paragraph.

60. At the conclusion of the information-retention period provided in the preceding Paragraph, Sims shall notify the United States at least 30 Days prior to the destruction

of any documents, records, or other information subject to the requirements of the preceding Paragraph and, upon request by the United States, Sims shall deliver any such documents, records, or other information to EPA. Sims may assert that certain documents, records, or other information is privileged under the attorney-client privilege or any other privilege recognized by federal law. If Sims asserts such a privilege, it shall provide the following: (1) the title of the document, record, or information; (2) the date of the document, record, or information; (3) the name and title of each author of the document, record, or information; (4) the name and title of each addressee and recipient; (5) a description of the subject of the document, record, or information, which description shall be sufficient to inform the reader of the nature and basis of the assertion of privilege and (6) the privilege asserted by Sims. However, no documents, records, or other information required to be prepared or submitted pursuant to this Consent Decree shall be withheld on grounds of privilege.

61. Sims may also assert that information required to be provided under this Section is protected as Confidential Business Information ("CBI") under 40 C.F.R. Part 2. As to any information that Sims seeks to protect as CBI, Sims shall follow the procedures set forth in 40 C.F.R. Part 2.

62. This Consent Decree in no way limits or affects any right of entry and inspection, or any right to obtain information, held by the United States pursuant to applicable federal laws, regulations, or permits, nor does it limit or affect any duty or obligation of Sims to maintain documents, records, or other information imposed by applicable federal or state laws, regulations, or permits.

## XI. EFFECT OF SETTLEMENT/RESERVATION OF RIGHTS

63. This Consent Decree fully and conclusively resolves the civil claims of the United States arising under the Clean Water Act for the violations alleged in the Complaint filed in this action through the date of lodging.

64. The United States reserves all legal and equitable remedies available to enforce the provisions of this Consent Decree, except as expressly stated in Paragraph 63. This Consent Decree shall not be construed to limit the rights of the United States to obtain penalties or injunctive relief under the Act or implementing regulations, or under other federal laws, regulations, or permit conditions, except as expressly specified in Paragraph 63. The United States further reserves all legal and equitable remedies to address any imminent and substantial endangerment to the public health or welfare or the environment arising at, or posed by, Sims' Facility, whether related to the violations addressed in this Consent Decree or otherwise.

65. In any subsequent administrative or judicial proceeding initiated by the United States for injunctive relief, civil penalties, other appropriate relief relating to the Facility or Sims' violations, Sims shall not assert, and may not maintain, any defense or claim based upon the principles of waiver, res judicata, collateral estoppel, issue preclusion, claim preclusion, claim-splitting, or other defenses based upon any contention that the claims raised by the United States in the subsequent proceeding were or should have been brought in the instant case, except with respect to claims that have been specifically resolved pursuant to Paragraph 63 of this Section.

66. This Consent Decree is not a permit, or a modification of any permit, under any federal, State, or local laws or regulations. Sims is responsible for achieving and maintaining complete compliance with all applicable federal, State, and local laws, regulations, and permits; and Sims' compliance with this Consent Decree shall be no defense to any action commenced pursuant to any such laws, regulations, or permits, except as set forth herein. The United States does not, by its consent to the entry of this Consent Decree, warrant or aver in any manner that Sims' compliance with any aspect of this Consent Decree will result in compliance with provisions of the Act, 33 U.S.C. §1251 *et seq.*, or with any other provisions of federal, State, or local laws, regulations, or permits.

67. This Consent Decree does not limit or affect the rights of Sims or of the United States against any third parties, not party to this Consent Decree, nor does it limit the rights of third parties, not party to this Consent Decree, against Sims, except as otherwise provided by law.

68. This Consent Decree shall not be construed to create rights in, or grant any cause of action to, any third party not party to this Consent Decree.

## XII. COSTS

69. The Parties shall bear their own costs of this action, including attorneys' fees, except that the United States shall be entitled to collect the costs (including attorneys' fees) incurred in any action necessary to collect any portion of the civil penalty or any stipulated penalties due but not paid by Sims.

## XIII. NOTICES

70. Unless otherwise specified herein, whenever notifications, submissions, or communications are required by this Consent Decree, they shall be made in writing and addressed as follows:

To the United States:

Chief, Environmental Enforcement Section
Environment and Natural Resources Division
U.S. Department of Justice
Box 7611 Ben Franklin Station
Washington, D.C. 20044-7611
Re: DOJ No. 90-5-1-1-10706

and

Rich Campbell
Office of Regional Counsel
U.S. Environmental Protection Agency
Region IX
75 Hawthorne Street (ORC-2)
San Francisco, CA 94105

To Sims:

Chief Corporate Counsel (Compliance)
16 West 22nd Street, 10th Floor
New York, New York 10010

and

Margaret Rosegay, Esq.
Pillsbury Winthrop Shaw Pittman LLP
Four Embarcadero Center, Suite 2200
San Francisco, CA 94111

71. Any Party may, by written notice to the other Parties, change its designated notice recipient or notice address provided above.

72. Notices submitted pursuant to this Section shall be deemed submitted upon mailing, unless otherwise provided in this Consent Decree or by mutual agreement of the Parties in writing.

## XIV. EFFECTIVE DATE

73. The Effective Date of this Consent Decree shall be the date upon which this Consent Decree is entered by the Court or a motion to enter the Consent Decree is granted, whichever occurs first, as recorded on the Court's docket.

## XV. RETENTION OF JURISDICTION

74. The Court shall retain jurisdiction over this case until termination of this Consent Decree, for the purpose of resolving disputes arising under this Decree or entering orders modifying this Decree, pursuant to Sections IX and XVI, or effectuating or enforcing compliance with the terms of this Decree.

## XVI. MODIFICATION

75. The terms of this Consent Decree, including any attached appendices, may be modified only by a subsequent written agreement signed by all the Parties. Where the modification constitutes a material change to this Decree, it shall be effective only upon approval by the Court. Changes to work schedules incorporated by reference into this Consent Decree shall be considered non-material modifications.

76. Any disputes concerning modification of this Decree shall be resolved pursuant to Section IX of this Decree (Dispute Resolution), provided, however, that, instead of

the burden of proof provided by Paragraph 55 (Standard of Review), the Party seeking the modification bears the burden of demonstrating that it is entitled to the requested modification in accordance with Federal Rule of Civil Procedure 60(b).

## XVII. TERMINATION

77. After Sims has completed the requirements of Section V (Compliance Requirements) of this Decree, has thereafter maintained continuous and satisfactory compliance with this Consent Decree and the General Storm Water Permit for a period of one year, has complied with all other requirements of this Consent Decree and has paid the civil penalty and any accrued stipulated penalties as required by this Consent Decree, Sims may serve upon the United States a Request for Termination, stating that Sims has satisfied those requirements, together with all necessary supporting documentation.

78. Following receipt by the United States of Sims' Request for Termination, the Parties shall confer informally concerning the Request and any disagreement that the Parties may have as to whether Sims has satisfactorily complied with the requirements for termination of this Consent Decree. If the United States agrees that the Decree may be terminated, the Parties shall submit, for the Court's approval, a joint stipulation terminating the Decree.

79. If the United States does not agree that the Decree may be terminated, Sims may invoke Dispute Resolution under Section IX of this Decree. However, Sims shall not seek Dispute Resolution of any dispute regarding termination, under Paragraph 51 (Formal Dispute Resolution) of Section IX, until at least 60 days after service of its Request for Termination.

## XVIII. PUBLIC PARTICIPATION

80. This Consent Decree shall be lodged with the Court for a period of not less than 30 Days for public notice and comment in accordance with 28 C.F.R.§ 50.7. The United States reserves the right to withdraw or withhold its consent if the comments regarding the Consent Decree disclose facts or considerations indicating that the Consent Decree is inappropriate, improper, or inadequate. Sims consents to entry of this Consent Decree as lodged with the Court without further notice and agrees not to withdraw from or oppose entry of this Consent Decree by the Court or to challenge any provision of the Decree, unless the United States has notified Sims in writing that it no longer supports entry of the Decree.

## XIX. SIGNATORIES/SERVICE

81. Each undersigned representative of Sims and the United States certifies that he or she is fully authorized to enter into the terms and conditions of this Consent Decree and to execute and legally bind the Party he or she represents to this document.

82. This Consent Decree may be signed in counterparts, and its validity shall not be challenged on that basis. Sims agrees to accept service of process by mail with respect to all matters arising under or relating to this Consent Decree and to waive the formal service requirements set forth in Rules 4 and 5 of the Federal Rules of Civil Procedure and any applicable Local Rules of this Court including, but not limited to, service of a summons.

## XX. INTEGRATION

83. This Consent Decree, including the recitals thereto, constitutes the final, complete, and exclusive agreement and understanding among the Parties with respect to the settlement embodied in the Decree and supersedes all prior agreements and understandings, whether oral or written, concerning the settlement embodied herein. Other than deliverables that are subsequently submitted and approved pursuant to this Decree, no other document, nor any representation, inducement, agreement, understanding, or promise, constitutes any part of this Decree or the settlement it represents, nor shall it be used in construing the terms of this Decree.

## XXI. FINAL JUDGMENT

84. Upon approval and entry of this Consent Decree by the Court, this Consent Decree shall constitute a final judgment of the Court as to the United States and Sims. The Court finds that there is no just reason for delay and therefore enters this judgment as a final judgment under Fed. R. Civ. P. 54 and 58.

Dated and entered this __ day of _____, 2014.

_____
UNITED STATES DISTRICT JUDGE
Northern District of California

FOR PLAINTIFF UNITED STATES OF AMERICA:

**For the U.S. Department of Justice:**

ELLEN M. MAHAN
Deputy Section Chief
Environmental Enforcement Section
Environment and Natural Resources Division
U.S. Department of Justice

PATRICIA L. HURST
Senior Counsel
Environmental Enforcement Section
Environment and Natural Resources Division
U.S. Department of Justice
P.O. Box 7611
Ben Franklin Station
Washington, D.C. 20044-7611
202-307-1242

**For the U.S. Environmental Protection Agency:**

9/15/14

SYLVIA QUAST
Regional Counsel
U.S. Environmental Protection Agency, Region 9

**FOR SIMS GROUP USA CORPORATION:**

L. STEVEN SHINN
President, West Region
Sims Group USA Corporation
400 South 4th Street
Richmond, CA 94804
510-412-5342

# APPENDIX B
STANDARD OPERATING PROCEDURES

# PACKAGING AND SHIPPING OF SAMPLES

## 1.0 PERFORMANCE OBJECTIVE

The purpose of this SOP is to describe the procedures that shall be used to package and ship environmental samples. These procedures are the recommended handling procedures for all sample shipments to minimize the loss of samples associated with breakage and/or being received above the method required temperature. These requirements are mandatory for all samples being transported by project personnel. Project personnel include all employees as well as personnel directly employed by the analytical subcontractor. Third-party courier services, regardless of whether contracted internally or by the analytical laboratory, are always considered non-project personnel. Strict adherence to these procedures shall help ensure sample integrity even if delivery is delayed.

## 2.0 EQUIPMENT AND MATERIALS

- Duct tape;
- Clear packing tape;
- Custody seals;
- Ziploc (or equivalent) bags, various sizes;
- Packing material (Styrofoam, bubble wrap, etc.);
- Mailing labels (in addition to any shipping papers); and
- Site-specific Health & Safety Plan (HASP).

## 3.0 PROCEDURES

The following procedures shall be adhered to for packaging and shipping of all non- hazardous samples.

### 3.1 Coolers

Coolers are the most common package or containment device used to ship samples. Coolers are also used during sampling efforts to store and transport samples prior to shipping. It is very important that samples be placed in an iced cooler immediately after collection. The ice in the cooler used for shipping will last much longer if the sample containers placed into it have been pre-chilled. The following procedures shall be used when packing the cooler for shipment:

1. Secure the drain on the cooler with packing tape or duct tape to prevent accidental opening.

2. Place each individual sample (soil and/or ground water) in a Ziploc bag. VOA vials that are aliquots from the same sample can be placed in the same bag. It is recommended that the



ED_013190_00000184-00093

VOA vials be wrapped with bubble wrap or paper towel to prevent excessive contact during shipping.

3. Place the samples into the cooler. Situate the sample containers so that they do not touch each other. This is very important for aqueous samples in glass containers as they are more prone to break.

4. Use plastic bubble wrap or Styrofoam peanuts as packing or filler material to prevent the samples from colliding and breaking during transportation. A thin layer of Styrofoam or bubble wrap on the inside bottom of the cooler may help prevent breaking of the sample containers during transport. Avoid using shredded paper as packing material. If the paper becomes wet it will no longer be useful to prevent samples from colliding. Only a minimum amount of packing material should be used as these materials insulate the samples and prevent them from being properly chilled. Plastic sample containers or cardboard can be placed between glass containers. Bags of ice may be also be used as packaging material between samples. Sample containers should be snug and not easily moved within the cooler.

5. Fill the cooler with ice. Ice should be double-bagged in Ziploc bags. Forty to fifty percent of the cooler capacity should contain ice to keep the samples cold during transport. If a commercial carrier, such as FedEx or UPS, is shipping the samples, it is best to use more ice in case delivery is delayed. Less ice may be used if the samples will be delivered by hand. As a rule of thumb, an average cooler with a capacity of approximately 48 quarts will require two to three, eight-pound bags of ice.

6. Place the chain-of-custody (COC) record in a Ziploc bag and tape it to the underside of lid of the cooler. If samples are packed in multiple coolers, the number of coolers should be marked on the COC record and a photocopy of the COC shall be placed in each cooler.

7. Tape the cooler shut to prevent accidental opening or potential leakage. Tape shall be placed around the entire perimeter of the lid and then around the body of cooler in two or three places. Do not tape down or otherwise restrict access to the cooler handles. Coolers used for shipping should not have any broken or missing handles.

8. Custody seals shall then be placed on the cooler to document the integrity of the shipping container. A minimum of two custody seals shall be placed on each cooler in a manner that the cooler cannot be opened without breaking the seal. Each custody seal shall be signed and dated by the person packing the cooler and the seals shall covered by clear packing tape to prevent accidental loss or damage during shipping.

9. Affix a mailing label with the laboratory's address on the cooler. Apply clear tape over the address label to prevent accidental loss or damage during shipping. The label should be used in addition to any shipping papers required by carriers.

## 3.2 Boxes

Some samples do not require temperature control and may be shipped in boxes. The boxes should be sturdy enough to withstand rough handling. No liquids shall ever be shipped by box. Materials suitable to be shipped by box include:

- Air samples in summa canisters, air-tight gas sampling bags or other non- pressurized sample containers;
- Bulk asbestos samples; and
- Soil samples for geotechnical analyses.

These materials may be securely packed in a suitable box. The box shall be sealed with packing tape and affixed with address labels and custody seals as described above.

# 4.0 DOCUMENTATION

A copy of any applicable shipping papers shall be retained for future reference. Any pertinent shipping information should be recorded on the Daily Field Report or in the field notebook for the project.



ED_013190_00000184-00095

# SEDIMENT SAMPLING

## 1.0 PERFORMANCE OBJECTIVE

The purpose of this SOP is to describe the procedures that shall be used for the collection of sediment samples from marine environments, streams, rivers, lakes, etc.

## 2.0 EQUIPMENT AND MATERIALS

The selection of sediment sampling equipment will be based on project requirements, distance from the shore, and water depth.

## 3.0 PROCEDURES

Sediment sampling should be performed in teams of two or more persons for safety. The following are general procedures to be followed when collecting sediment samples.

1. Identify the sampling location and document it in the field book.

2. Pre-label sample containers. Use a water-proof marker and include sample number, location, date collected, and initials of sampler.

3. Fill plastic wash bottles with water from outside the boat.

4. Wear appropriate safety (e.g., flotation vests) and protective gear (e.g., gloves, boots, and glasses).

The following provides additional discussion relating to the above procedures. The location of the sampling station should be identified using a GPS receiver. The general location relative to permanent landmarks and the grid location will be recorded in a logbook.

Samples will be taken from a workboat or by wading. If sampling from a stream or river, sediment sampling will begin at the most downstream sampling station and proceed upstream to avoid contaminating downstream samples with suspended fines from upstream. If sampling from a boat, the boat will be positioned upstream of the sampling location where the anchor will be dropped from the bow and used to position and hold the stern of the boat at the sampling station. If wading, the sampling station will be approached from the downstream side in order to prevent contamination by suspended sediments from upstream.

Samples will be taken from the top of sediment using the selected sampling device. The sampling depth should be specified in the Sampling and Analysis Plan.

Between each sampling station, the sampling device will be decontaminated to prevent transfer of contamination from one sampling station to another as described in Section 3.7.

Surface samples will be obtained using grabs (e.g., Eckman™ or Ponar™ samplers) and the top 2 inches (approximately 5 cm) will be used to form the sample volume needed for toxicity testing.



ED_013190_00000184-00096

At each location, water quality parameters may also be measured in the field.

At each location, the samples will be visually assessed and the following information will be logged:

- Sample ID
- Depth to sediment surface
- Maximum penetration depth of the sampler
- Characteristics of the sediment including:

  -Texture

  -Color (Munsell scale)

  -Presence and type of debris, especially metal debris

  -Visible staining
- Other observations

## 3.1 Equipment Specific Procedures

This section describes the methods used to obtain representative sediment samples from marine water bodies, ponds, lakes and reservoirs, using several types of sampling equipment:

- Ekman Grab Sampler
- Petite Ponar Grab Sampler
- Hand Auger

## 3.2 Ekman Grab Sampler

The Ekman grab sampler is designed to obtain sediment samples in soft, finely divided littoral bottoms that are free from vegetation and inter-mixtures of sand, stones, and other coarse debris. The Ekman sampler performs particularly well in those water body bottoms composed of finely divided muck, mud, ooze, submerged marl, or fine peaty material. The Ekman is composed of a stainless steel box with a pair of spring-tensioned, scooped jaws mounted on pivot points on opposite sides of the box. The jaws are held open by stainless steel wires that lead to an externally mounted trigger assembly. If the Ekman is being used for sampling in deep water, it is mounted on a line and dropped through the water to the sediment. A steel messenger is then attached to the line and dropped to activate the trigger assembly. If the Ekman is being used for sampling in shallow water, it is mounted onto an extension pole. The extension pole has an internal rod which is pressed from the end opposite the Ekman to activate the trigger assembly.

*Procedure:*

- Load the jaws by placing the wire loops onto the trigger assembly pegs, causing the springs to be tensioned.
- Deploy the Ekman with open jaws.
- When the operator believes that the Ekman has penetrated the bottom sediment, activate the closure mechanism of the jaws.
- Slowly retrieve the Ekman by extracting slowly.
- Remove and transfer the sediment from the Ekman into a stainless steel bowl.

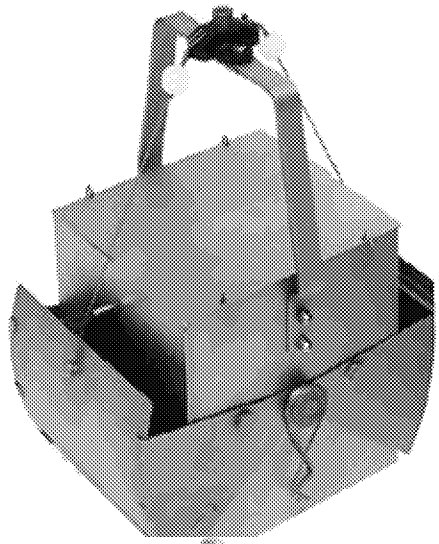

## 3.4 Petite Ponar Grab Sampler

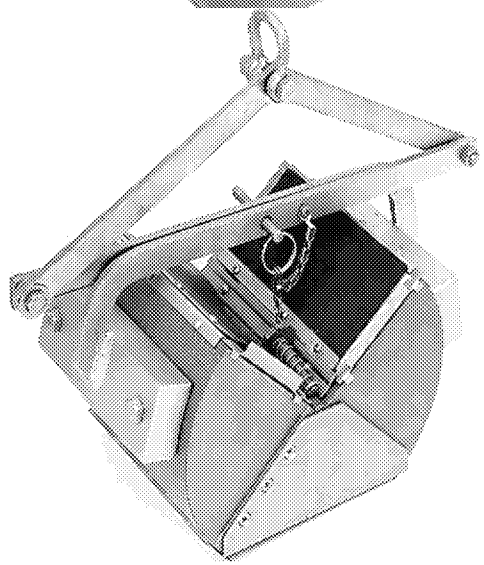

The petite ponar grab sampler (Ponar) consists of a pair of weighted, tapered jaws, each of which are attached to a catch bar, joined at a pivot point to allow for the jaws to close when activated. On touching the bottom, the tension of the bar is released, causing a springed, set pin to pop out and allow the catch bars to hinge and close the Ponar. The Ponar is closed by lifting the cable or rope attached to the opposite end of the catch bars from the jaws. The jaws of the Ponar overlap to minimize sample washout during the ascent of equipment. The upper portion of the jaws are covered with a mesh screen and rubber flap, allowing water to pass through the Ponar during descent, reducing disturbance at the sediment-water interface by a shock wave.

*Procedure:*

- Set the jaws of the Ponar in the open position by using the catch bars on the top of the Ponar.
- Insert the springed, released pin through the holes in both of the catch bars.
- Lower the Ponar slowly under the water surface to avoid premature triggering upon impact with the water surface. Once in the water, the Ponar can be lowered to the bottom, when the line should be slack.
- Tug the line gently three times to ensure that the mouth of the Ponar is squarely set on the bottom and that the jaws are open.
- To retrieve the Ponar, pull the line up at a constant speed, hand-over- hand. The tension on the cable will retract the jaws.
- Open the Ponar and allow the sediment to discharge into a stainless steel bowl or lined basin.



ED_013190_00000184-00098

## 3.6 Hand Auger

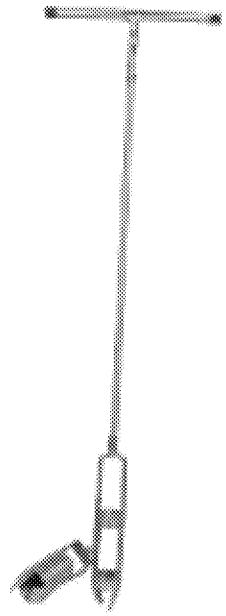

The hand auger is comprised of a three- or four-inch diameter stainless steel barrel with two ramped, sharpened cutting teeth. The hand auger is mounted onto one or more four-foot extension rods. When rotated, the teeth bite into the sediment and pull the barrel downward. It is used for sampling highly consolidated sediment, such as clay, where grab samplers are unable to penetrate the sediment surface.

*Procedure:*

- Attach the hand auger to as many extension sections as required to reach the sediment.
- Lower the hand auger to the sediment surface.
- Turn the hand auger clockwise, allowing for the auger to bury itself into the sediment rather than pushing it into the sediment.
- When the operator believes that the core has penetrated to the desired depth, slowly pull the auger from the sediment.
- Slowly retrieve the hand auger through the water column.
- Place the auger into a stainless steel bowl or lined basin and extract the desired sediment out.

## 3.7 Equipment Decontamination

Reusable equipment that may come in contact with the sediment samples will be properly decontaminated between sample locations to prevent cross contamination of samples. Field personnel should first change all PPE that will come in contact with the equipment being decontaminated and rinse all visible debris (i.e., sediment, leaves, twigs, etc.) from the equipment using site water. The decontamination process will include the following:

- washing the equipment with a laboratory-grade detergent and water solution,
- rinsing with distilled water,
- rinsing with a 10-percent nitric-acid solution, and
- a final rinse with distilled water

After the equipment is decontaminated, if it will not be used immediately, keep the equipment clean by placing it in dedicated plastic or stainless-steel bins, boxes, or other appropriately sized containers.

# APPENDIX C
FIELD FORMS

| Project:<br>Project Location:<br>Project Number: | Log of Boring _____<br>**Sheet 1 of 1** |
|---|---|

| | | |
|---|---|---|
| Date(s) Drilled | Logged By | Checked By |
| Drilling Method | Drill Bit Size/Type | Total Depth of Borehole |
| Drill Rig Type | Drilling Contractor | Approximate Surface Elevation |
| Groundwater Level and Date Measured | Sampling Method(s) | Hammer Data |
| Borehole Backfill | Location | |

| Depth (feet) | Sample Type | Sample Number | Recovered (in) / Total (in) | PID Reading, ppm | MATERIAL DESCRIPTION | REMARKS AND OTHER TESTS |
|---|---|---|---|---|---|---|
| 0 | | | | | | |
| 5 | | | | | | |
| 10 | | | | | | |
| 15 | | | | | | |
| 20 | | | | | | |
| 25 | | | | | | |
| 30 | | | | | | |

[terraphase no well field pid & recovery.tpl]

terraphase engineering

# Daily Field Log

terraphase engineering

| Date: | Day of the Week: | Logged by: |
|---|---|---|
| Project Name: | Project Number: | |
| Site Location: | | |
| Weather Conditions: | | |
| Personnel present on site: | | |

| Time | Notes |
|---|---|
| | |
| | |
| | |
| | |
| | |
| | |
| | |
| | |
| | |
| | |
| | |
| | |
| | |
| | |
| | |
| | |
| | |
| | |
| | |
| | |
| | |
| | |
| | |
| | |
| | |

terraphase engineering

# Daily Tailgate Meeting Form

| | | |
|---|---|---|
| Date: | Day of the Week: | Conducted by: |
| Project Name: | Project Number: | |
| Site Location: | | |
| Weather Conditions: | | |
| Topics covered during meeting: | | |
| | | |
| | | |
| | | |
| | | |
| | | |

| Print Name | Signature | Organization |
|---|---|---|
| | | |
| | | |
| | | |
| | | |
| | | |
| | | |
| | | |
| | | |
| | | |
| | | |
| | | |
| | | |
| | | |
| | | |
| | | |
| | | |

# Sediment Sampling Log

terraphase engineering

| | | |
|---|---|---|
| Sample Location ID: | Date: | Logged by: |
| Project Name: | Project Number: | |
| Site Location: | | |
| GPS coordinates: | GPS coordinates (measured): | |
| Sampling equipment: | | |
| Start Time: | End Time: | |
| Estimated depth of water at sampling location: | | |
| Estimated volume of sediment sampled: | | |

| Depth below sediment surface | Description |
|---|---|
| | |
| | |
| | |
| | |
| | |
| | |
| | |
| | |
| | |
| | |

Photo Reference Number(s):

Sample ID Number:

| Analyte | EPA Method | Sample Container | Preservative |
|---|---|---|---|
| | | | |
| | | | |
| | | | |
| | | | |
| | | | |
| | | | |
| | | | |