RK
& ASSOCIATES, INC.

January 16, 2020

R17421-3

Compliance Tracker, AE-18J
Air Enforcement and Compliance Assurance Branch
US Environmental Protection Agency - Region 5
77 W Jackson Boulevard
Chicago, IL 60604

Emissions Test Report - RTO VOM Destruction Efficiency
GII, LLC – 1909 N. Clifton Avenue – Chicago, Illinois 60614
Construction Permit No:. 18110021; Site ID No.: 031600BTB

To Whom This May Concern:

On behalf of GII, LLC (GII), formerly General Iron Industries, Inc., please find attached an emissions test report for the existing metal shredder controlled by a Regenerative Thermal Oxidizer (RTO) and Packed Tower Scrubber. Testing was performed pursuant to Paragraph 48 of Administrative Consent Order EPA-5-19-113(a)-IL-08 and as described in the test protocol dated May 24, 2019 and amended on October 10, 2019.

Testing was performed for VOM at the RTO inlet and scrubber outlet to determine VOM removal efficiency of the RTO.

VOM testing was successfully performed on November 15 and 18, 2019 by Mostardi Platt. Test results demonstrate that the VOM destruction efficiency of the RTO meets the requirement specified in Paragraph 47 of the above-referenced ACO.

Pollutant emission factors and emission rates identified in the attached Mostardi Platt test report will be incorporated into the facility operating permit.

If you have any questions, or require any additional information please do not hesitate to contact Mr. Jim Kallas, Environmental Manager for GII at 847-508-9170 (jimkallas@general-iron.com) or me at 630-393-9000 (jpinion@rka-inc.com).

Yours very truly,
RK & Associates, Inc.

John G. Pinion
Principal Engineer

cc: Jim Kallas – Environmental Manager – GII, LLC – Chicago, Illinois – via e-mail

2 SOUTH 631 ROUTE 59; SUITE B
WARRENVILLE, IL 60555
(630) 393-9000
FAX (630) 393-9111

This Page Left Blank

Emissions Test Report
RTO VOM Destruction Efficiency

GII, LLC. – Chicago, Illinois

IEPA Site ID No.: 031600BTB

January 16, 2020

R17421-3

Prepared for:
GII, LLC
1909 N. Clifton, Avenue
Chicago, Illinois 60614

Submitted to:
Compliance Tracker, AE-18J
Air Enforcement and Compliance Assurance Branch
US Environmental Protection Agency - Region 5
77 W Jackson Boulevard
Chicago, IL 60604

RK & Associates, Inc.
2 South 631 Route 59
Suite B
Warrenville, Illinois 60555
Phone: 630-393-9000
Fax: 630-393-9111

This Page Left Blank

RK & Associates, Inc.

TABLE OF CONTENTS

1.0 INTRODUCTION 1
- 1.1 Facility Location 2
- 1.2 Project Contact Information 3
- 1.3 Required Elements of Emissions Test Report 3

2.0 SUMMARY OF TEST RESULTS 5
- 2.1 Process Operating Parameters 5
  - 2.1.1 Shredder Feed Rate 5
  - 2.1.2 RTO Combustion Chamber Temperature (^{0}F) 6
  - 2.1.3 Shredder Emissions Capture 7
- 2.2 VOM Destruction Efficiency Testing 8
  - 2.2.1 Errors During Testing 9
  - 2.2.2 Deviation from Reference Test Method 9

3.0 RTO OPERATING PARAMETERS 11
- 3.1 RTO Combustion Chamber Temperatures 11

FIGURES

Figure 1 Site Location Map 5
Figure 2 Facility Layout Map 6

TABLES

Table 2-1 Summary of Shredder Feed Rates 6
Table 2-2 Summary of RTO Combustion Chamber Temperatures 7
Table 2-3 Summary of Shredder RTO/Scrubber VOM Emission Testing 8
Table 3-1 Minimum, Maximum and Average Values for RTO Combustion Chamber Temperature 11

APPENDICES

Appendix A Mostardi Platt Test Report

Appendix B RTO Combustion Chamber Temperature Data

Appendix C Emissions Test Plan

Appendix D Administrative Consent Order EPA-5-19-113(a)-IL-08

This Page Left Blank

1.0 INTRODUCTION

GII, LLC (GII), formerly General Iron Industries, Inc., is an existing scrap metal recycling facility located at 1909 N. Clifton Avenue, Chicago, Illinois (see Figure 1). GII receives, and shreds mixed recyclable metal in various forms to produce uniform grades of ferrous and non-ferrous metals. Existing scrap handling and processing activities include receiving, sorting, shredding, metal separation and recovery of ferrous and nonferrous metals.

GII currently operates under an Illinois Environmental Protection Agency (IEPA) Lifetime Operating Permit (Application No. 81050001; Site ID No. 031600BTB) dated September 1, 2004.

On August 22, 2019, USEPA issued an Administrative Consent Order (ACO) (EPA-5-19-113(a)-IL-08). Paragraph 48 of the ACO required GII to conduct a performance test to demonstrate the VOM destruction efficiency of the RTO.

Emissions testing was performed using the test methods identified in Paragraph 49 of the ACO. An emissions test plan was submitted to USEPA dated May 24, 2019 (Test Plan). The Test Plan was amended on October 10, 2019 to change the location of the RTO inlet test port (no other changes to methods or procedures were included in this amendment). Testing was performed by Mostardi Platt. VOM testing was performed on November 15, 2019 (Run 1) and on November 18, 2019 (Runs 2 through 4).

It should be noted that Run 1 of VOM testing was performed on November 15, 2019. However, after Run 1 was completed, operational issues with the shredder/RTO prevented further testing. A USEPA representative present for testing on November 15, 2019 expressed a preference that all VOM test runs be performed on the same day. Therefore, VOM Run 1 was not used and three test runs (Runs 2 through 4) were completed on November 18, 2019.

The testing described herein successfully demonstrates that the VOM destruction efficiency of the RTO is 99%, exceeding the referenced value of 98% identified in Paragraph 47 of the ACO.

1.1 Facility Location

GII is located at 1909 N. Clifton Avenue in Chicago (Cook County) Illinois as shown in Figure 1. A Facility Layout Map is presented in Figure 2. Facility contact information is provided in Section 1.2 below.

1.2 Project Contact Information

Business Name:	GII, LLC
Source Location:	1909 N. Clifton Avenue – Chicago, Illinois 60614 Cook County Illinois
Latitude/Longitude	41.915823° N / -87.658231" W – Intersection of N Clifton Ave. and N Kingsbury Street - Front Gate
Office/Mailing Address:	1909 N. Clifton Avenue – Chicago, Illinois 60614
GII Contact:	Mr. Jim Kallas - Environmental Manager 847-508-9170 – jimkallas@general-iron.com
IEPA Site ID No.:	031600BTB
SIC Code:	5093 – Scrap and Waste Materials
NAICS Code:	423930 – Recyclable Material Merchant Wholesalers
Emissions Testing Contractor	Rich Sollars - Mostardi Platt 888 Industrial Drive – Elmhurst, Illinois 60126 630-993-2671
RKA Contact for Emissions Testing	John Pinion - Principal Engineer 2S631 Route 59, Suite B - Warrenville, Illinois 60555 630-393-9000 jpinion@rka-inc.com

1.3 Required Elements of Emissions Test Report

Paragraph 51 of the ACO (see Appendix D) identifies the following elements to be included in an emissions test report.

Required Test Report Element	Comment
51.a. A summary of the results including inlet and outlet organic material concentrations, destruction efficiency of the RTO, visual observations of capture efficiency and RTO operating temperatures.	See Section 2.1 and Appendix B of this report.
51.b. A description of the facility operation at the time of the test, including operating parameters.	The facility operations described in the May 24th Test Plan (see Appendix C of this report) accurately describes the facility operation at the time of testing. Section 2.1 and Appendix B of this report present the RTO operating temperatures during this test.
51.c. A description of the sampling and analytical procedures.	See Mostardi Platt test report in Appendix A of this report.
51.d. All copies of data and measurements obtained during the testing.	See Mostardi Platt test report in Appendix A of this report.

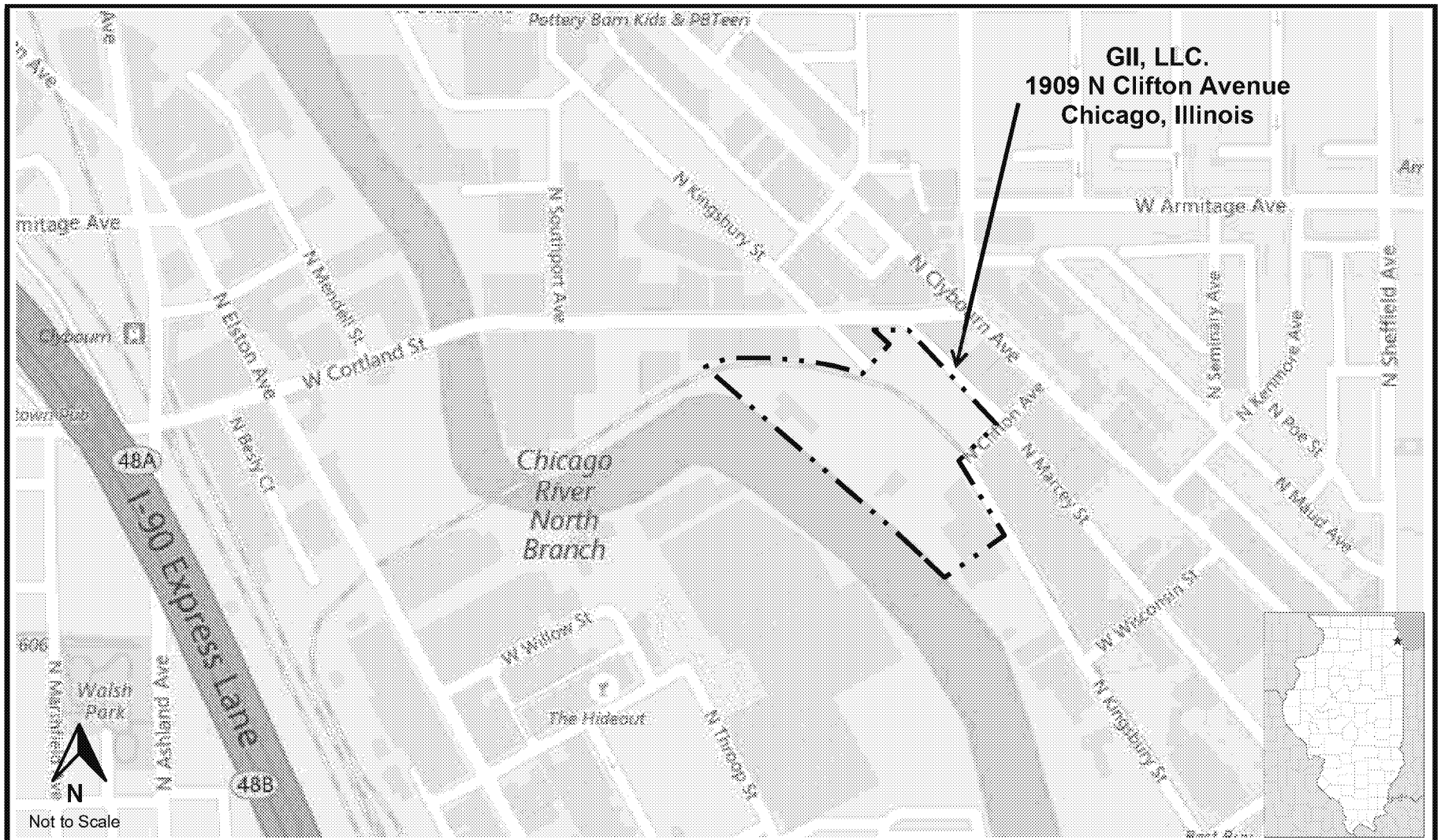

RK & Associates, Inc. 2S631 ROUTE 59, SUITE B WARRENVILLE, IL 60555 630-393-9000/630-393-9111	COMMENTS: RTO-Shredder Emissions Test Report		**Site Location Map** GII Industries, Inc. 1909 N Clifton Avenue - Chicago, Illinois		FIGURE 1
	DRAWN BY:	APPROVED BY: JGP	PROJECT NUMBER R17421-3	DATE DRAWN: 01-2020	REVISED DATE

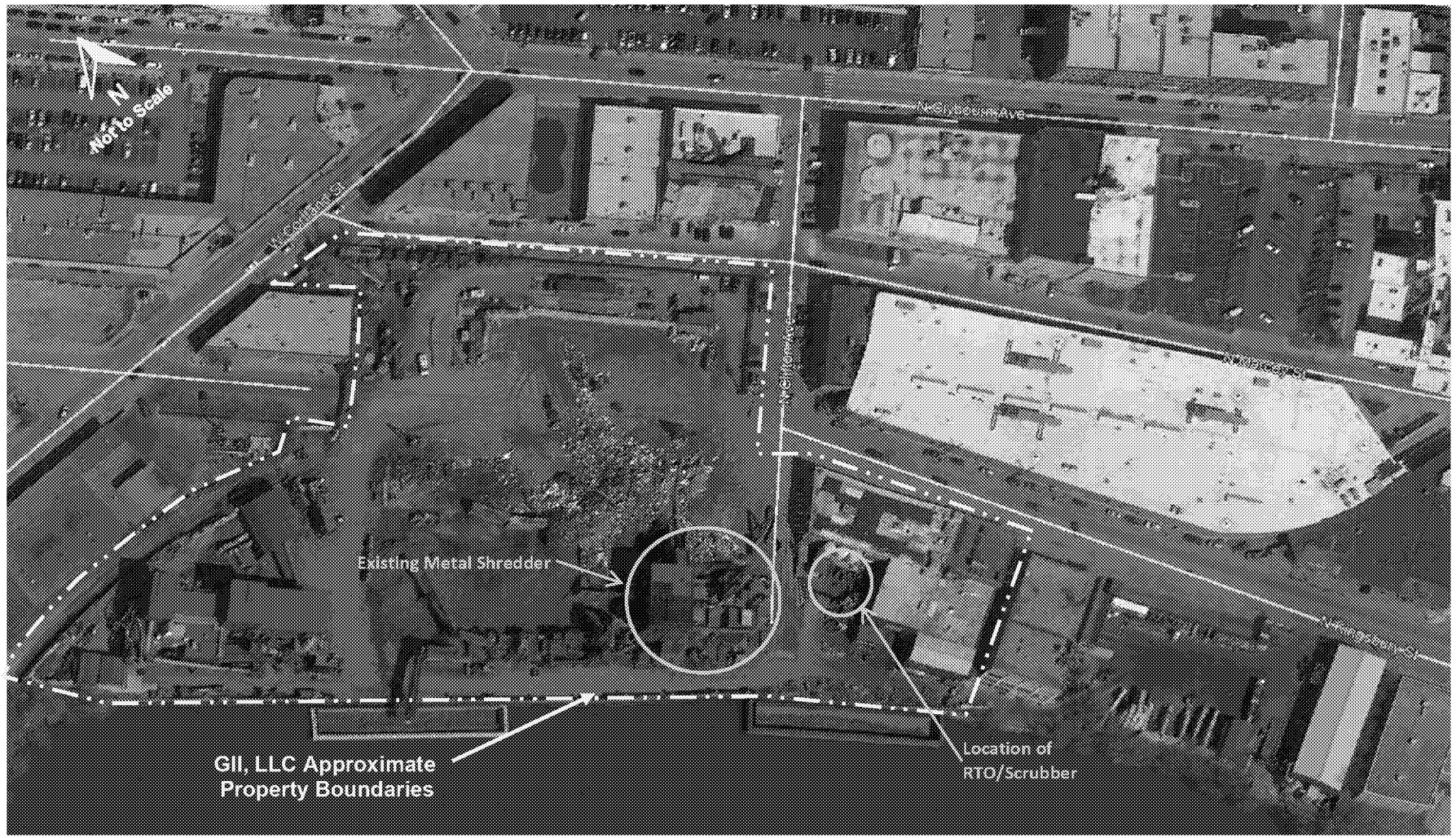

RK & Associates, Inc. 2S631 ROUTE 59, SUITE B WARRENVILLE, IL 60555 630-393-9000/630-393-9111	COMMENTS: RTO-Shredder Emissions Test Report		**Facility Layout Map** GII, LLC 1909 N Clifton Avenue - Chicago, Illinois		FIGURE: 2
	DRAWN BY:	APPROVED BY: JGP	PROJECT NUMBER: R17421-3	DATE: 01-2020	REVISED DATE:

2.0 SUMMARY OF TEST RESULTS

RTO VOM destruction efficiency testing was successfully completed on November 18, 2019.

The RTO-Shredder operating data for RTO combustion chamber temperature are summarized in Section 2.1 and detailed data are presented in Appendix B of this report.

The results of the VOM destruction efficiency testing are summarized in Section 2.2 below and detailed results are presented in the Mostardi Platt test report included in Appendix A of this report.

The VOM test methods and procedures for this test were performed in accordance with the Test Plan dated May 24, 2019, as amended on October 10, 2019 (see Appendix C). There were no deviations from the VOM test methods and procedures identified.

2.1 Process Operating Parameters

The following tables summarize the RTO-Scrubber operating data recorded during the identified test runs.

2.1.1 Shredder Feed Rate

Table 2-1 presents a summary of shredder feed rate.

Table 2-1 Summary of Shredder Feed Rates
GII, LLC - Chicago, Illinois

RTO Inlet and Scrubber Outlet Testing
for VOM Destruction Efficiency

Date	Run	Average Shredder Feed Rate (tph)	End of Life Vehicles (ELVs)	
			ELVs (tph)	Shredder Feed
11/15/2019[a]	1	407	274	67.3%
11/18/19	2	459	222	48.4%
11/18/19	3	443	232	52.4%
11/18/19	4	430	223	51.9%
Average		444	226	50.9%

a. VOM results from Run 1 are not included in the three run test average.

The shredder capacity (tons per hour) is highly dependent on the type of scrap being fed. Historically (2012 thru 2017), the shredder feed rate averaged 313 tph with approximately 20% of the total feed comprised of End of Life Vehicles (ELVs). For the purposes of this test, the target shredder feed rate during VOM testing was 400 to 450 tph with 50% ELVs in order to maximize VOM loading at the inlet for the RTO to simulate worst-case, short-term conditions.

Data presented in Table 2-1 demonstrates that the target total shredder feed rates and ELV feed rates were achieved.

Ferrous production is electronically monitored in the control room from a totalizer on a calibrated belt scale. The value from the totalizer was manually recorded at the start and end of each test to identify the total mass of ferrous scrap produced. This value was multiplied by a factor of 1.33 to estimate the gross shredder feed rate. During testing, the number of cars fed to the shredder was manually recorded. The total number of cars fed were multiplied by the average ELV weight to calculate the total tons per hour of ELVs fed during each test run.

ELVs were stockpiled for these tests. The gross weight and number of ELVs in each incoming load of ELVs placed in the stockpile was recorded. The combined weight of delivered ELVs was divided by the total number of ELVs using data from the facility truck scale. The average weight of ELVs processed during testing performed on November 14 and November 18, 2019 was 1.66 and 1.57 tons per ELV respectively. The average weight of ELVs processed during the one run performed on November 15, 2019 was 1.66 tons per ELV.

2.1.2 RTO Combustion Chamber Temperature (°F)

The RTO combustion chamber temperature was monitored by a thermocouple located in the combustion chamber. Operating temperatures (°F) during each test run were recorded at 10-second intervals and stored electronically. The data downloaded from the RTO/Scrubber database was exported to a spreadsheet to identify the minimum, maximum, and average values for each test run. Table 2-2 presents a summary of the RTO combustion chamber temperature from the November 14 and November 18, 2019 testing.

Table 2-2 Summary of RTO Combustion Chamber Temperatures GII, LLC RTO Inlet and Scrubber Outlet Testing for VOM Destruction Efficiency

			10 Second Data Intervals		
Run #	Run 1	Run 2	Run 3	Run 4	Average
Date	11/15/19	11/18/19	11/18/19	11/18/19	
Start	10:33	8:51	11:22	16:40	
Stop	13:18	10:11	12:45	17:55	
	°F[a]	°F	°F	°F	°F
Minimum	1,621	1,739	1,737	1,733	1,736
Maximum	1,827	1,801	1,805	1,808	1,805
Average	1,752	1,768	1,769	1,767	1,768

a. Values from Run 1 are not used in calculation of test

The raw RTO combustion chamber temperatures from each 10-second interval are presented in Appendix B.

2.1.3 Shredder Emissions Capture

Shredder emissions capture efficiency was not a required parameter for this test.

An emissions capture hood is suspended over the top of the shredder. The hood is equipped with rubber curtains that extend downward to the top of the shredder to minimize the open area. The only opening to atmosphere is at the shredder feed chute, which is mostly blocked by the feed rolls and incoming material. The placement of the hood and the air flow is maintained to minimize the amount of steam escaping the hood.

It is not possible to directly, or indirectly, measure the capture efficiency of the hood. Based on visual observations of the emissions capture hood during testing, GII estimated that the hood appeared to provide > 90% capture of steam created in the shredder.

2.2 VOM Destruction Efficiency Testing

VOM destruction efficiency testing was performed by Mostardi Platt on November 15 and 18, 2019 pursuant to USEPA Method 25a. Detailed information from sample collection and analyses is presented in Mostardi Platt's report presented in Appendix A of this document.

It should be noted that Run 1 of VOM testing was performed on November 15, 2019. However, operational issues with the shredder/RTO prevented further testing. A USEPA representative present for testing expressed a preference that all VOM test runs be performed on the same day. Therefore, Run 1 of the VOM testing was not used and three test runs (Runs 2, 3 and 4) were completed on November 18, 2019.

Table 2-3 below presents a summary of VOM emissions testing results.

Table 2-3 Summary of Shredder RTO/Scrubber VOM Emission Testing
GII, LLC - Chicago, Illinois

Test Averages do not include November 15, 2019 test values.

Parameter	Run 1	Run 2	Run 3	Run 4	Average Runs 2 - 4
Date:	11/15/19	11/18/19	11/18/19	11/18/19	
Start Time:	10:33	8:51	11:22	16:40	
Finish Time:	13:17	10:11	12:45	17:55	
Shredder Feed Rate, tph:	**407**	**459**	**443**	**430**	**444**
% End of Life Vehicles:	**67.3%**	**48.4%**	**52.4%**	**51.9%**	**50.9%**
Scrubber Outlet Gas Temperature, degrees F:	100.7	100.6	103.3	104.1	102.7
Scrubber Outlet Gas Moisture (% by Volume):	6.7%	6.7%	7.2%	5.4%	6.4%
Scrubber Outlet Average Flue Gas Pressure, in Hg:	29.69	29.18	29.18	29.18	29.18
Gas Sample Volume, dscf:	44.464	35.358	35.553	36.253	35.721
Average Scrubber Stack Gas Velocity, ft/sec:	39.707	34.414	34.827	35.423	34.888
RTO Inlet Flow Rate, scfm:	66,309	56,334	56,422	56,677	56,478
Scrubber Outlet Flow Rate, scfm:	66,498	56,660	57,063	57,958	57,227
Average Scrubber Outlet CO_2 by volume (%), dry basis:	0.4%	0.5%	0.3%	0.4%	0.4%
Average Scrubber Outlet O_2 by volume (%), dry basis:	20.2%	20.2%	20.2%	20.4%	20.3%
Isokinetic Variance:	108.2	100.9	101.3	99.8	100.7
RTO Inlet					
Volatile Organic Matter (VOM)[a] ppm as Propane (C_3H_8) (wet)	497.2	599.1	523.8	642.4	588.4
Methane (CH_4) ppm as Propane (wet)	1.2	1.2	1.2	1.4	1.3
Ethane (C_2H_6) ppm as Propane (wet)	0.0	0.0	0.0	0.0	0.0
Volatile Organic Matter (VOM) ppm as Propane (wet)	496.0	597.9	522.6	641.0	587.2
Volatile Organic Matter (VOM)[a], lb/hr:	225.4	230.8	202.0	248.9	227.3
Scrubber Stack					
Volatile Organic Matter (VOM)[a] ppm as Propane (C_3H_8) (wet)	7.90	5.80	5.50	6.80	6.00
Methane (CH_4) ppm as Propane (wet)	0.40	0.80	0.04	0.04	0.05
Ethane (C_2H_6) ppm as Propane (wet)	0.00	0.00	0.00	0.00	0.00
Volatile Organic Matter (VOM) ppm as Propane (wet)	7.50	5.00	5.10	6.40	5.60
Volatile Organic Matter (VOM)[a], lb/hr:	3.40	1.90	2.00	2.60	2.20
VOM Destruction Efficiency, %:	**98.5%**	**99.2%**	**99.0%**	**99.0%**	**99.0%**
VOM lb/ton	**0.0084**	**0.0041**	**0.0045**	**0.0060**	**0.0049**

a. Measured and reported as Total Hydrocarbons (THC) pursuant to the test method. THC is equivalent to VOM.

The VOM emission factor is calculated by dividing the average hourly emission rate by the average hourly shredder gross feed rate. The VOM emissions at the RTO inlet and scrubber outlet were adjusted to subtract methane and ethane pursuant to Method 25a.

The demonstrated average VOM destruction efficiency was 99.0%.

The shredder feed rate and process operating data for VOM testing is summarized in Section 2.1 and presented in detail in Appendix B.

2.2.1 Errors During Testing

There were no sampling method errors reported during VOM emissions testing.

2.2.2 Deviation from Reference Test Method

There were no deviations from the reference test method reported.

This Page Left Blank

3.0 RTO OPERATING PARAMETERS

3.1.1 RTO Combustion Chamber Temperatures

RTO and scrubber operating data recorded during these tests will be used to identify proposed permit limits based on the average observed values.

Table 3-1 presents a summary of the minimum, maximum, and average values for RTO combustion chamber temperatures (°F).

The minimum and maximum values identify one-hour average values that describe the demonstrated temperature range during testing.

The reported average value represents the average of the three test runs.

Table 3-1 Minimum, Maximum and Average Values for RTO Combustion Chamber Temperature GII, LLC - Chicago, Illinois

Test Date	Sampled Pollutant	Parameter	Units	Min 1 Hour Average	Max 1 Hour Average	Rolling 3 Hour Average
11/18/2019	THC	RTO Temp	°F	1,733	1,808	1,768

This Page Left Blank

RK & Associates, Inc.

Emissions Test Report
RTO VOM Destruction Efficiency
GII, LLC
IEPA Site ID.: 031600BTB

GII, LLC
1909 NORTH CLIFTON AVENUE
CHICAGO, ILLINOIS 60614

JANUARY 2020

APPENDIX A

MOSTARDI PLATT TEST REPORT

mostardi platt

VOC Destruction Efficiency Test Report

General Iron Industries, Inc.
Chicago Facility
RTO Inlet and Scrubber Stack
Chicago, Illinois
Project No. M193103A
November 15 and 18, 2019

ED_013190A_00000316-00021

mostardi platt

VOC Destruction Efficiency Test Report

General Iron Industries, Inc.
Chicago Facility
RTO Inlet and Scrubber Stack
Chicago, Illinois
November 15 and 18, 2019

Report Submittal Date
January 13, 2020

© Copyright 2020
All rights reserved in
Mostardi Platt

Project No. M193103A

Corporate Headquarters
888 Industrial Drive
Elmhurst, Illinois 60126
630-993-2100

Chicago, IL | Crown Point, IN | Concord, NC | Mendota Heights, MN | Denver, CO

TABLE OF CONTENTS

1.0 EXECUTIVE SUMMARY 1

2.0 TEST METHODOLOGY 1
- Method 1 Sample and Velocity Traverse Determination 2
- Method 2 Volumetric Flow Rate Determination 2
- Method 3 Oxygen (O_2)/Carbon Dioxide (CO_2) Determination 2
- Method 3A Oxygen (O_2)/ Carbon Dioxide (CO_2) Determination 2
- Method 4 Moisture Determination 3
- Method 18 Methane (CH_4) and Ethane (C_2H_6) Determination 3
- Method 25A Volatile Organic Compounds (VOC) Determination 3

3.0 TEST RESULT SUMMARIES 4

4.0 CERTIFICATION 5

APPENDIX
- Appendix A - Plant Operating Data 7
- Appendix B - Test Section Diagrams 9
- Appendix C - Sample Train Diagrams 14
- Appendix D - Calculation Nomenclature and Formulas 22
- Appendix E - Sample Analysis Data 31
- Appendix F - Reference Method Test Data (Computerized Sheets) 36
- Appendix G - Field Data Sheets 60
- Appendix H - Calibration Data 83
- Appendix I – Gas Cylinder Certifications 110

1.0 EXECUTIVE SUMMARY

MOSTARDI PLATT conducted a Volatile Organic Compound (VOC) destruction efficiency test program for General Iron Industries, Inc. at their Chicago Facility in Chicago, Illinois on the Regenerative Thermal Oxidizer (RTO) Inlet and Scrubber Stack on November 15 and 18, 2019. This report summarizes the results of the test program and test methods used.

The test locations, test dates, and test parameters are summarized below.

TEST INFORMATION		
Test Location	**Test Dates**	**Test Parameter**
RTO Inlet and Scrubber Stack	November 15 and 18, 2019	Volatile Organic Compounds VOC

The purpose of this test program was to determine VOC concentrations, destruction efficiencies, and emission rates. A complete summary of emission test results follows the narrative portion of this report.

Run 1 is excluded from the test average as the RTO system cycled on and off throughout the 2nd half of the run. Data is shown in the summary table in Section 3.0 for informational purposes only.

The identifications of individuals associated with the test program were summarized below.

TEST PERSONNEL INFORMATION		
Location	**Address**	**Contact**
Test Facility	General Iron Industries, Inc. 1909 N. Clifton Avenue Chicago, Illinois 60614	Mr. Jim Kallas jim@general-iron.com
Testing Company Representative	Mostardi Platt 888 Industrial Drive Elmhurst, Illinois 60126	Mr. Richard J. Sollars II Senior Project Manager (630) 993-2666 (phone) rsollars@mp-mail.com

The test crew consisted of Messrs. T. Russ, C. Jensen, S. Burton, R. Simon, R. Spoolstra, B. Garcia, C. Menet, C. Buglio, K. Beckham, M. Keator, L. Sorce, J. Kukla, and R. Sollars of Mostardi Platt. Mr. Scott Connolly of the USEPA was on site to observe testing.

TEST RESULTS					
Test Locations	**Test Parameter**	**RTO Inlet**	**Scrubber Stack**	**Permit Requirement**	**Destruction Efficiency %**
RTO Inlet and Scrubber Stack	VOC	227.3 lb/hr	2.2 lb/hr	98.0%	99.0%

Operating data as provided by General Iron Industries, Inc. are included in Appendix A.

2.0 TEST METHODOLOGY

Emission testing was conducted following the methods specified in 40 CFR, Part 60, Appendix A. Schematics depicting the test locations and sampling trains are found in Appendices B and C,

respectively. Explanations of nomenclature and calculations are found in Appendix D. Sample analysis data are found in Appendix E. Reference method data and field data sheets for each test run are found in Appendices F and G, respectively.

The following methodologies were used during the test program:

Method 1 Sample and Velocity Traverse Determination

Test measurement points were selected in accordance with Method 1. The characteristics of the measurement location are summarized below.

TEST POINT INFORMATION					
Location	**Duct Diameter (Inches)**	**Upstream Diameters**	**Downstream Diameters**	**Test Parameter**	**Number of Sampling Points**
RTO Inlet	50.0	8.15	2.63	VOC	1
				Volumetric Flow	16
Scrubber Stack	74.0	1.40	2.00	VOC	1
				Volumetric Flow	24

Method 2 Volumetric Flow Rate Determination

Stack gas velocity was measured following Method 2, for purposes of calculating the gas volumetric flow rate and emission rates on a lb/hr and basis. An S-type pitot tube, incline manometer, thermocouple and temperature readout were used to determine gas velocity at each sample point at the test location. The Scrubber Stack volumetric flow rates were taken in conjunction with the 5/202 testing being performed simultaneously with the VOC testing. RTO Inlet flows were performed prior to and after each run, with those two flow rates averaged. All of the equipment used was calibrated in accordance with the specifications of the Method. Calibration data are presented in Appendix H.

Method 3 Oxygen (O_2)/Carbon Dioxide (CO_2) Determination

RTO Inlet gas molecular weight was determined in accordance with Method 3. A Fyrite gas analyzer was used to determine stack gas oxygen and carbon dioxide content and, by difference, nitrogen content. All of the equipment used was calibrated in accordance with the specifications of the Method.

Method 3A Oxygen (O_2)/ Carbon Dioxide (CO_2) Determination

Scrubber Stack gas O_2 and CO_2 concentrations were determined in accordance with USEPA Method 3A, 40CFR60, Appendix A. An Ecom analyzer was used to determine the O_2 and CO_2 concentrations in the manner specified in the Method. Zero nitrogen (a low ppm pollutant in balance nitrogen calibration gases) was introduced during other instrument calibrations to check instrument zero. High- and a mid-range % O_2 and CO_2 levels in balance nitrogen were also introduced. Zero and mid-range calibrations were performed using USEPA Protocol gas after each test run. A list of calibration gases used and the results of all calibration and other required quality assurance checks are found in Appendix H. Copies of the gas cylinder certifications are found in Appendix I. This testing met the performance specifications as outlined in the Method.

Method 4 Moisture Determination

Stack gas moisture content was determined using a Method 4 sampling train at each of the two test locations. The Scrubber Stack Method 4 sampling train was part of the combined Method 5/202 sample train. In this technique, flue gas is drawn through a probe after which moisture is condensed through a series of four impingers. The first two impingers were charged with approximately 100 mL of deionized, distilled water. Impinger three was left empty and impinger four was charged with clean, dried silica gel. The water volumes of the impinger train were measured and the silica gel was weighed before and after each test run to determine the mass of moisture condensed.

During testing, the sample train was operated in the manner specified in USEPA Method 4. All of the data specified in Method 4 (gas volume, delta H, impinger outlet well temperature, etc.) was recorded on field data sheets.

All of the equipment used was calibrated in accordance with the specifications of the Method. Calibration data are presented in Appendix H.

Method 18 Methane (CH_4) and Ethane (C_2H_6) Determination

CH_4 and C_2H_6 concentrations were determined in accordance with USEPA Method 18. An SRI 8610C Gas Chromatograph/Flame Ionization Detector (GC/FID) was used to separate and quantify C_2H_6 and CH_4 concentrations present in the source effluent. Effluent gas was captured using an integrated tedlar bag sampling system.

The system was calibrated in accordance with the method. A 3-point calibration was conducted by triplicate injection of certified CH_4 and C_2H_6 cylinders. The mid-level calibration was injected at the end of the sample analysis. All C_2H_6 values were below the detection limit of the GC/FID therefore no C_2H_6 was subtracted in calculating VOC concentrations. Calibration and run data are presented in Appendix E and copies of gas certifications are presented in Appendix I.

Method 25A Volatile Organic Compounds (VOC) Determination

The Method 25A sampling and measurement system meets the requirements for stack sampling of VOC set forth by the United States Environmental Protection Agency (USEPA). In particular, it meets the requirements of USEPA Reference Method 25A, "Determination of Total Gaseous Organic Concentration Using a Flame Ionization Analyzer," 40CFR60, Appendix A. This method applies to the measurement of total gaseous organic concentration of hydrocarbons. With this method, the gas sample was extracted from the sample location through a heated Teflon sample line to the flame ionization detector (FID) analyzer.

The flame ionization detectors (FID) used during this program were Thermo 51i High-Temperature Hydrocarbon Analyzer. They are highly sensitive FID that provides a direct reading of organic vapor concentrations with linear ranges between 0-10 and 0-10,000 ppm by volume. The instrument was calibrated using ultra-zero air and propane in air EPA Protocol standards for the total hydrocarbon (THC) determination. The calibrations were performed before and after sampling with calibration checks performed between each test run. Sample times and locations were logged simultaneously on data loggers.

The calibration data are found in Appendix H and copies of the calibration gas cylinder certifications are found in Appendix I.

3.0 TEST RESULT SUMMARIES

General Iron Industries, Inc. Chicago, IL RTO Inlet and Scrubber Stack VOC Summary											
Test No.	Date	Start Time	End Time	RTO Inlet THC ppm as C_3H_8 (wet)	RTO Inlet CH_4 ppm as C_3H_8 (wet)	RTO Inlet C_2H_6 ppm as C_3H_8 (wet)	RTO Inlet VOC ppm as C_3H_8 (wet)	Scrubber Stack THC ppm as C_3H_8 (wet)	Scrubber Stack CH_4 ppm as C_3H_8 (wet)	Scrubber Stack C_2H_6 ppm as C_3H_8 (wet)	Scrubber Stack VOC ppm as C_3H_8 (wet)
1	11/15/19	10:33	13:17	497.2	1.2	0.0	496.0	7.9	0.4	0.0	7.5
2	11/18/19	8:51	10:11	599.1	1.2	0.0	597.9	5.8	0.8	0.0	5.0
3	11/18/19	11:22	12:45	523.8	1.2	0.0	522.6	5.5	0.4	0.0	5.1
4	11/18/19	14:40	17:55	642.4	1.4	0.0	641.0	6.8	0.4	0.0	6.4
Average[1]				**588.4**	**1.3**	**0.0**	**587.2**	**6.0**	**0.5**	**0.0**	**5.5**

Test No.	Date	Start Time	End Time	RTO Inlet Flowrate, SCFM	RTO Inlet THC lb/hr	Scrubber Stack Flowrate, SCFM	Scrubber Stack THC lb/hr	VOC Destruction Efficiency, %
1	11/15/19	10:33	13:17	66,309	225.4	66,498	3.4	98.5
2	11/18/19	8:51	10:11	56,334	230.8	56,660	1.9	99.2
3	11/18/19	11:22	12:45	56,422	202.0	57,063	2.0	99.0
4	11/18/19	14:40	17:55	56,677	248.9	57,958	2.6	99.0
Average[1]				**56,478**	**227.3**	**57,227**	**2.2**	**99.0**

[1]Averages exclude Run 1 due to abnormal RTO operations

4.0 CERTIFICATION

MOSTARDI PLATT is pleased to have been of service to General Iron Industries, Inc. If you have any questions regarding this test report, please do not hesitate to contact us at 630-993-2100.

CERTIFICATION

As project manager, I hereby certify that this test report represents a true and accurate summary of emissions test results and the methodologies employed to obtain those results, and the test program was performed in accordance with the methods specified in this test report.

MOSTARDI PLATT

Richard J. Sollars II — Project Manager

Eric L. Ehlers — Quality Assurance

General Iron Industries, Inc. will provide operating data prior to submittal.

Appendix B- Test Section Diagrams

VOC TRAVERSE FOR ROUND DUCTS

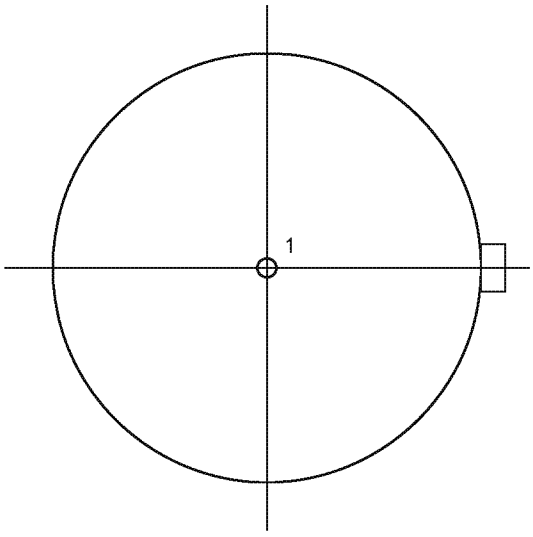

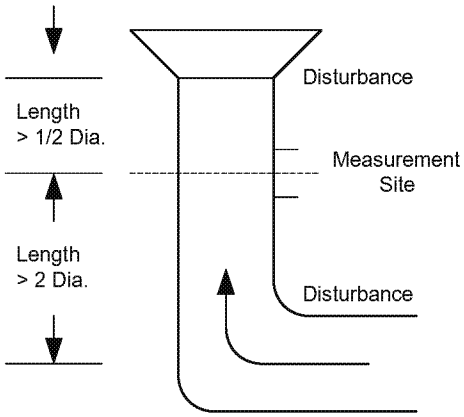

Job:	General Iron Industries, Inc. Chicago, IL
Date:	November 15 and 18, 2019
Test Location:	RTO Inlet
Duct Diameter:	4.167 Feet
Duct Area:	13.64 Square Feet
No. Points Across Diameter:	1
No. of Ports:	1
Port Length:	6.0 Inches

VOLUMETRIC FLOW TRAVERSE FOR ROUND DUCTS

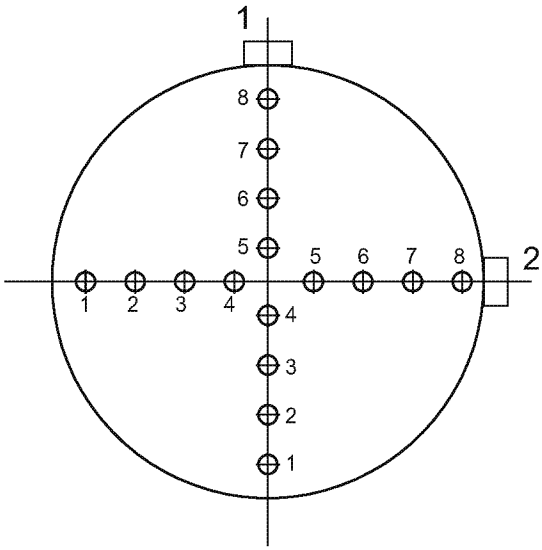

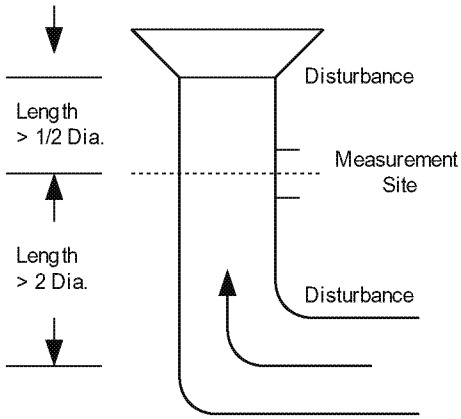

Job:	General Iron Industries, Inc. Chicago, IL
Date:	November 15 and 18, 2019
Test Location:	RTO Inlet
Stack Diameter (Feet):	4.167
Stack Area (Square Feet):	13.64
No. Sample Points Across Diameter:	8
No. of Ports:	2
Port Length (Inches):	6.0

VOC TRAVERSE FOR ROUND DUCTS

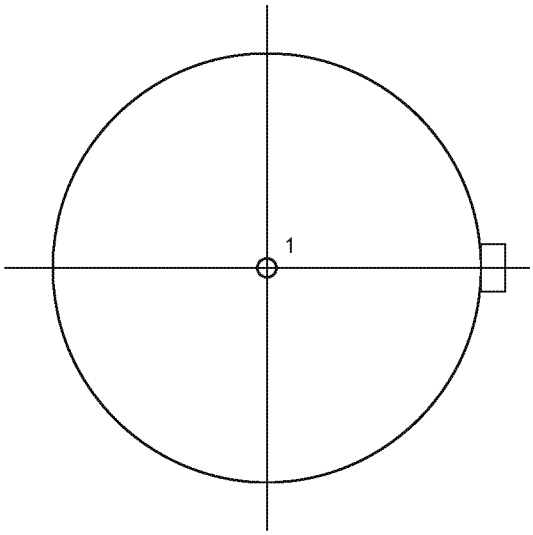

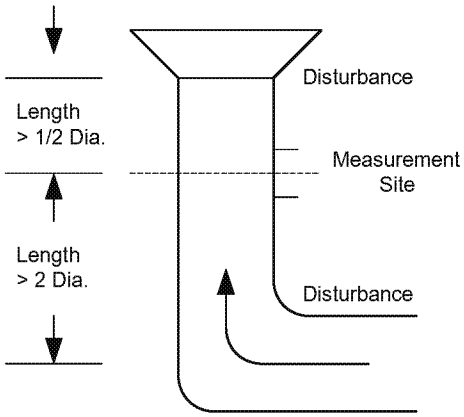

Job:	General Iron Industries, Inc. Chicago, IL
Date:	November 15 and 18, 2019
Test Location:	Scrubber Stack
Duct Diameter:	6.167 Feet
Duct Area:	29.87 Square Feet
No. Points Across Diameter:	1
No. of Ports:	1
Port Length:	6.0 Inches

VOLUMETRIC FLOW TRAVERSE FOR ROUND DUCTS

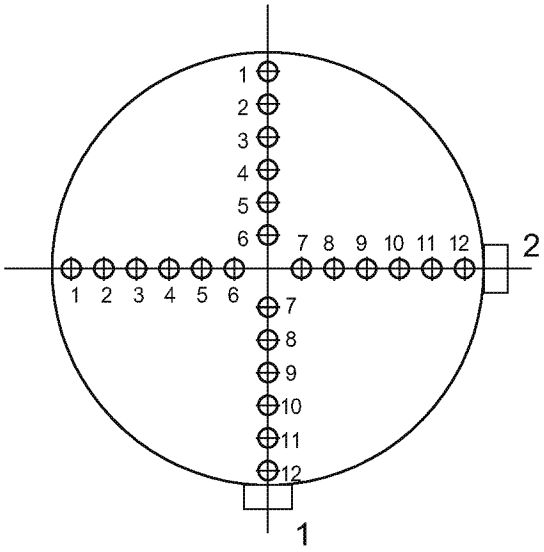

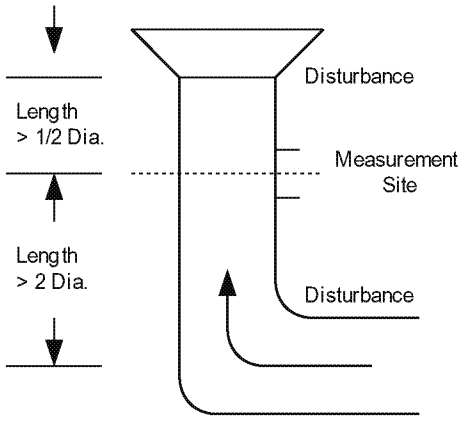

Job:	General Iron Industries, Inc. Chicago, IL
Date:	November 14, 15, and 18, 2019
Test Location:	Scrubber Stack
Duct Diameter:	6.167 Feet
Duct Area:	29.87 Square Feet
No. Points Across Diameter:	12
No. of Ports:	2
Port Length:	6.0 Inches

Appendix C - Sample Train Diagrams

USEPA Method 2 – Type S Pitot Tube Manometer Assembly

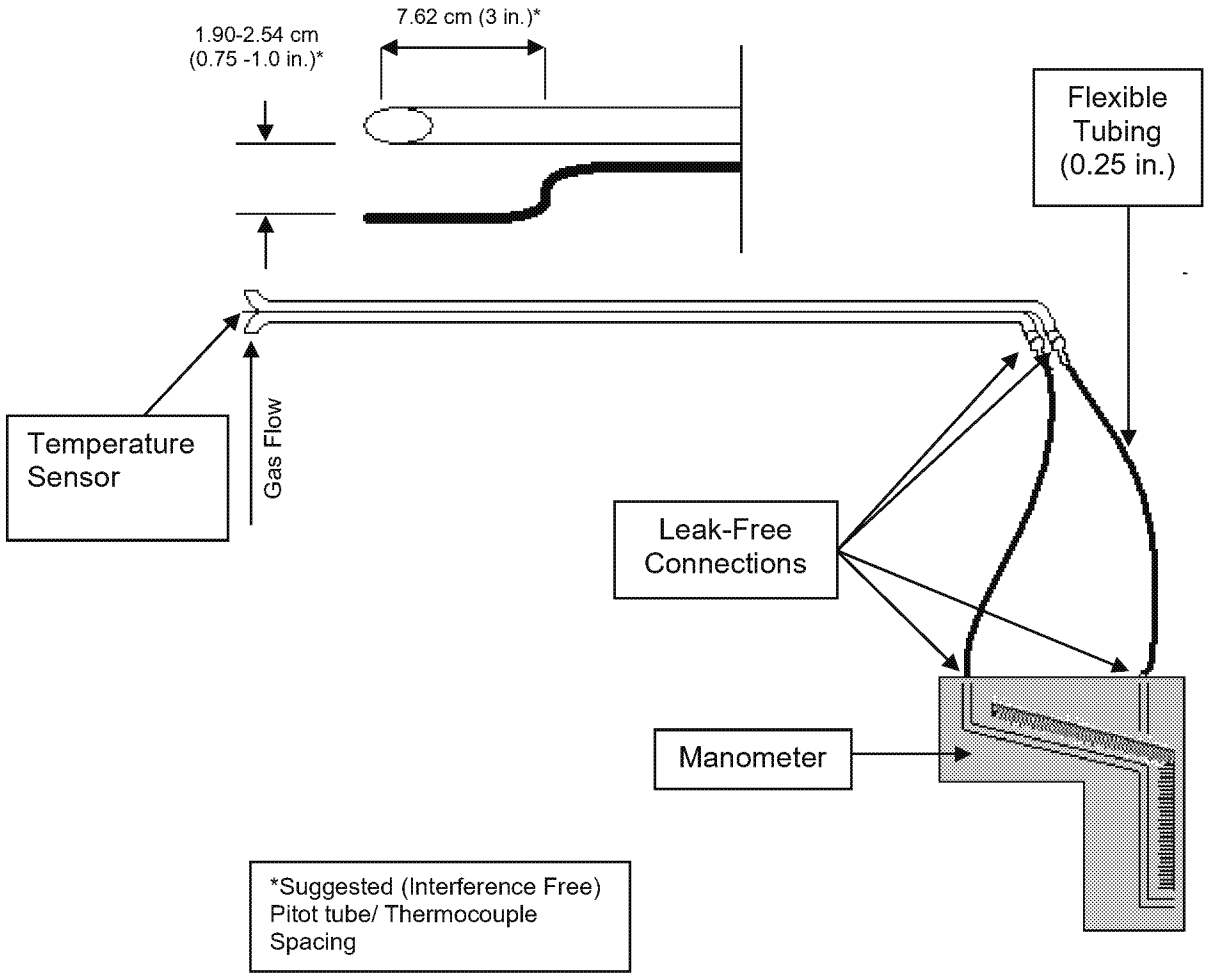

USEPA Method 3 - Integrated Oxygen/Carbon Dioxide Sample Train Diagram Utilizing Fyrite Gas Analyzer

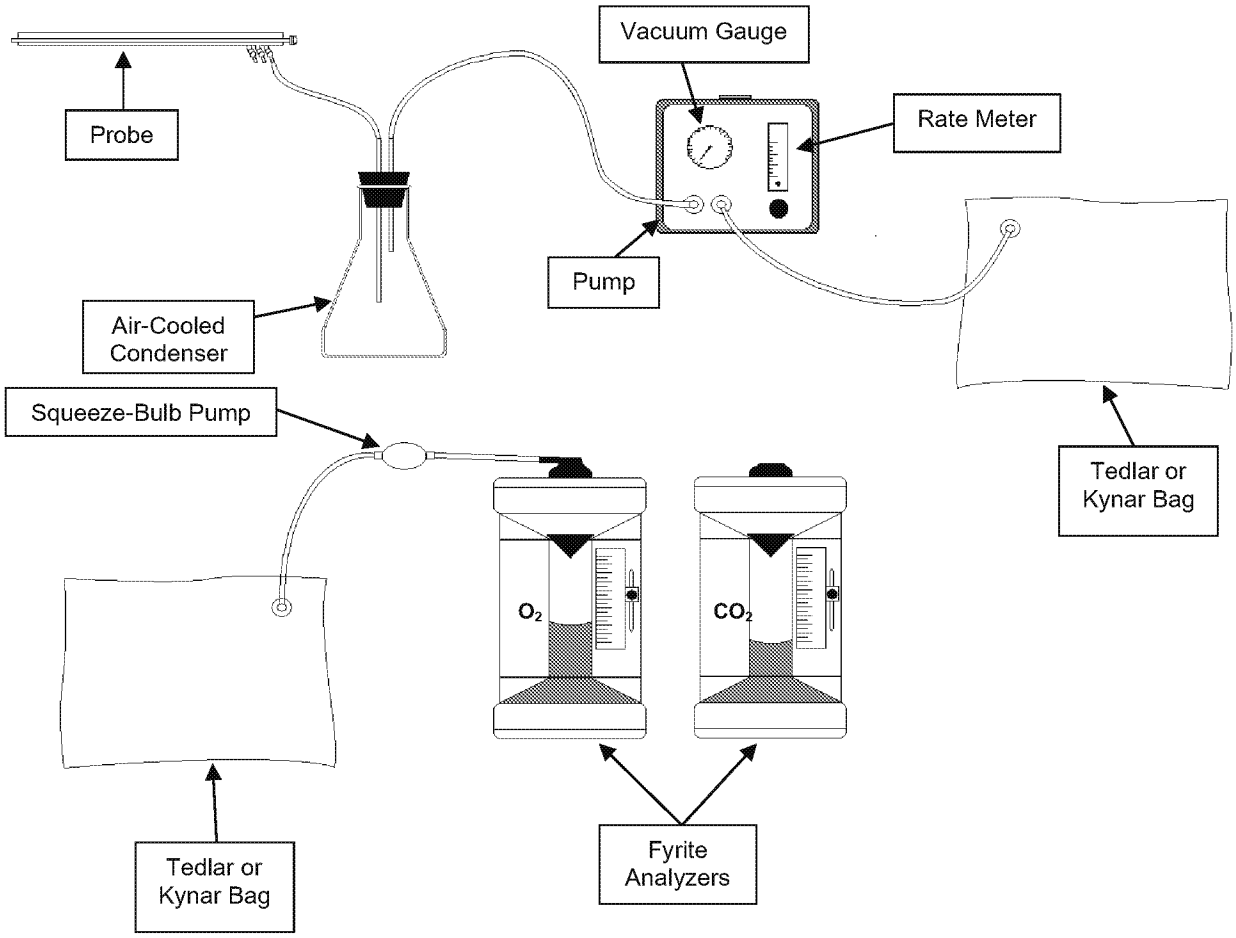

USEPA Method 3A - Integrated Oxygen/Carbon Dioxide Sample Train Diagram Utilizing ECOM To Measure from Sample Exhaust

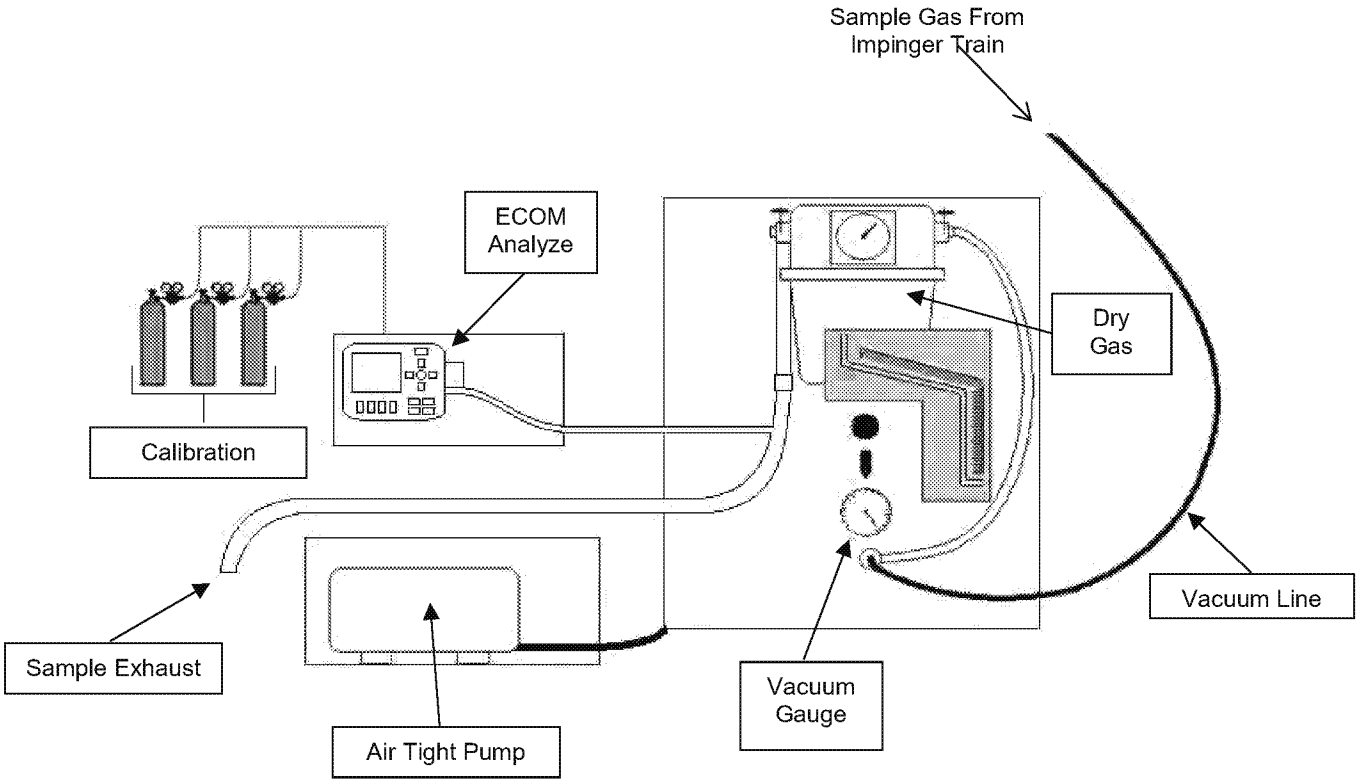

USEPA Method 4- Moisture Content Sample Train Diagram

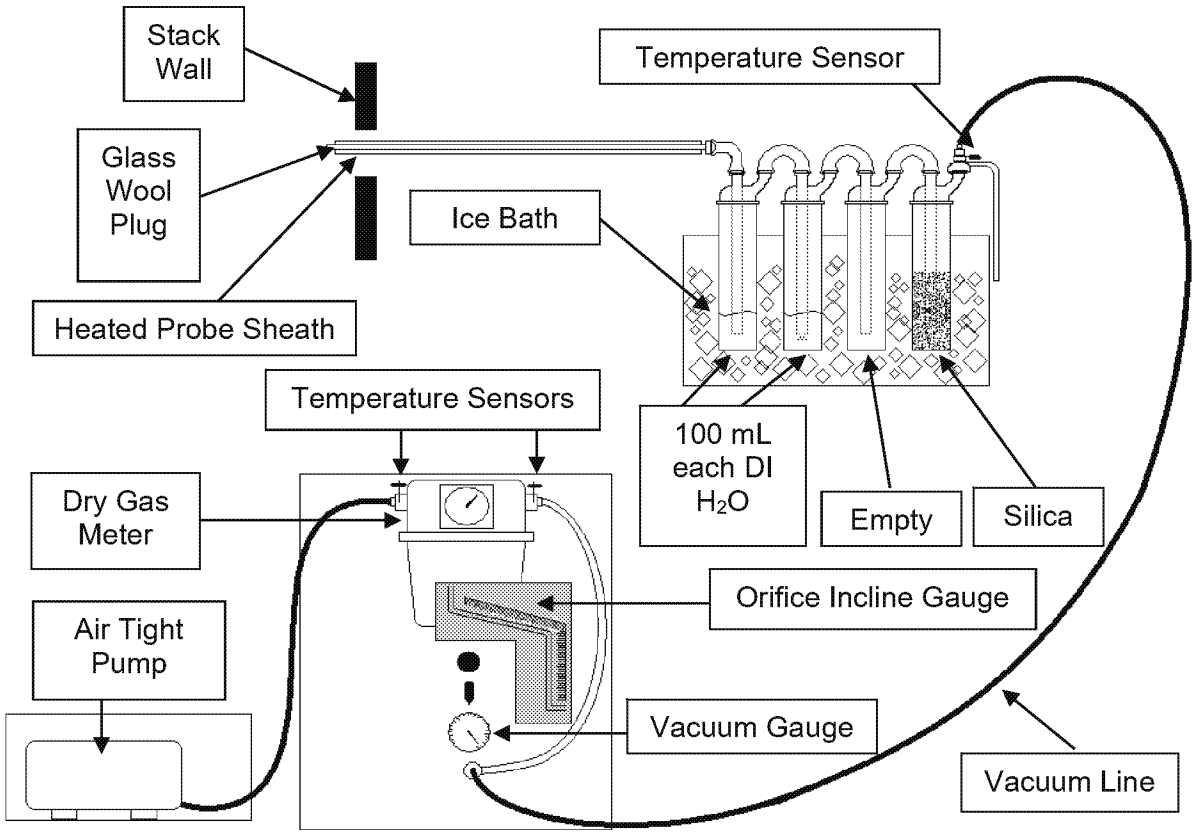

USEPA Method 5/202- Condensable Particulate Matter

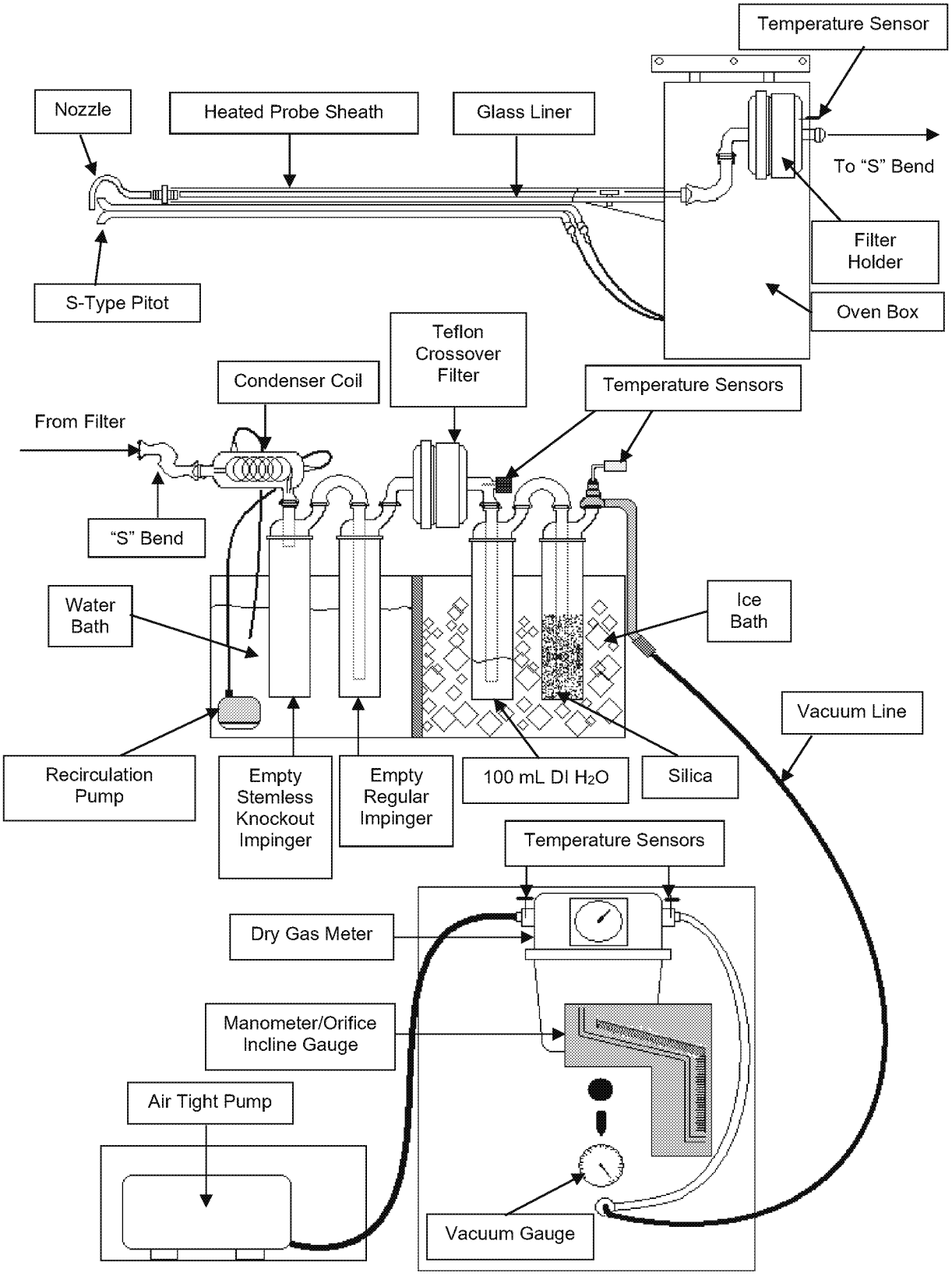

USEPA Method 18 – Methane and Ethane Using an Integrated Bag Sample

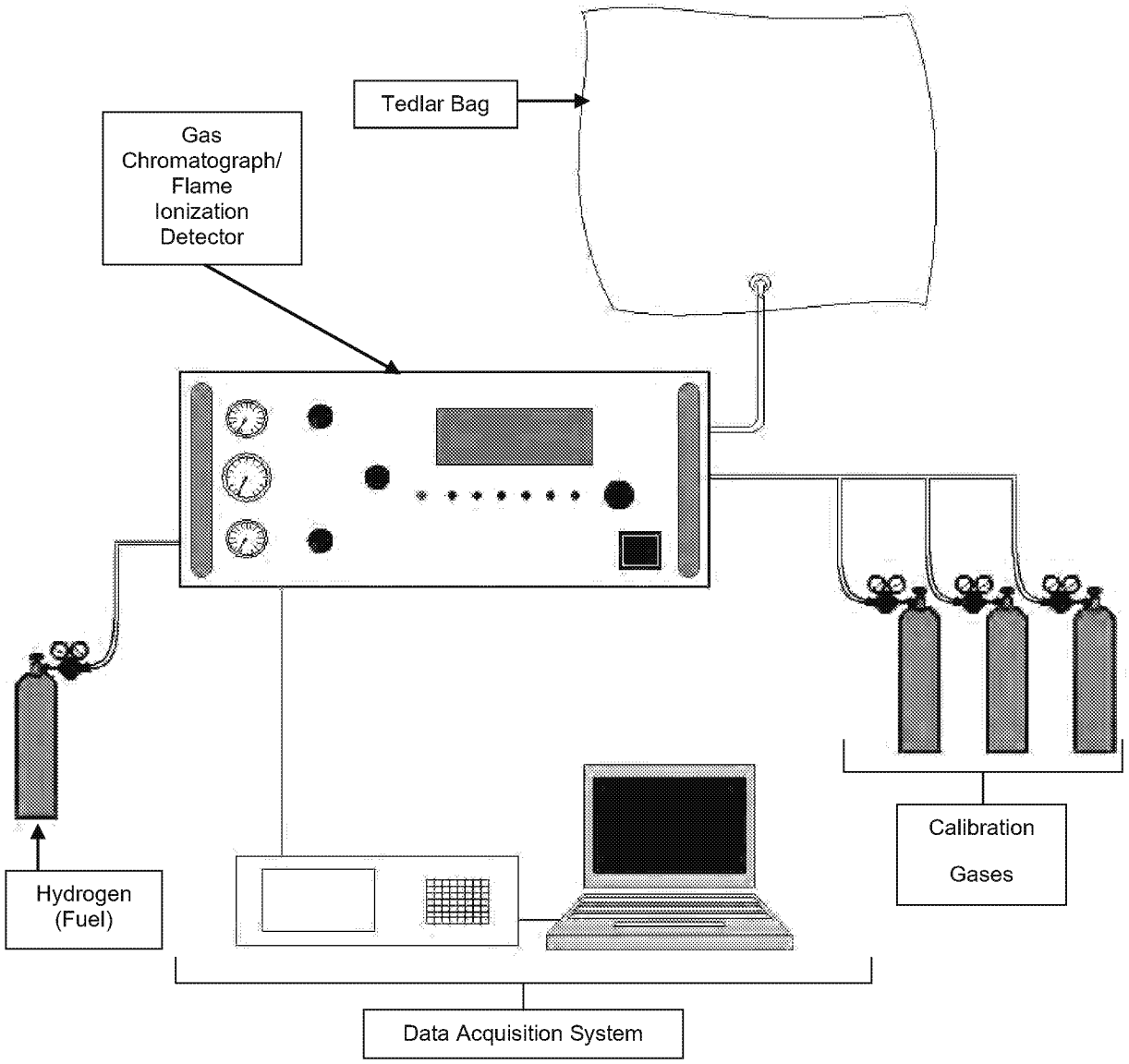

USEPA Method 25A – Total Gaseous Organic Compound Sample Train

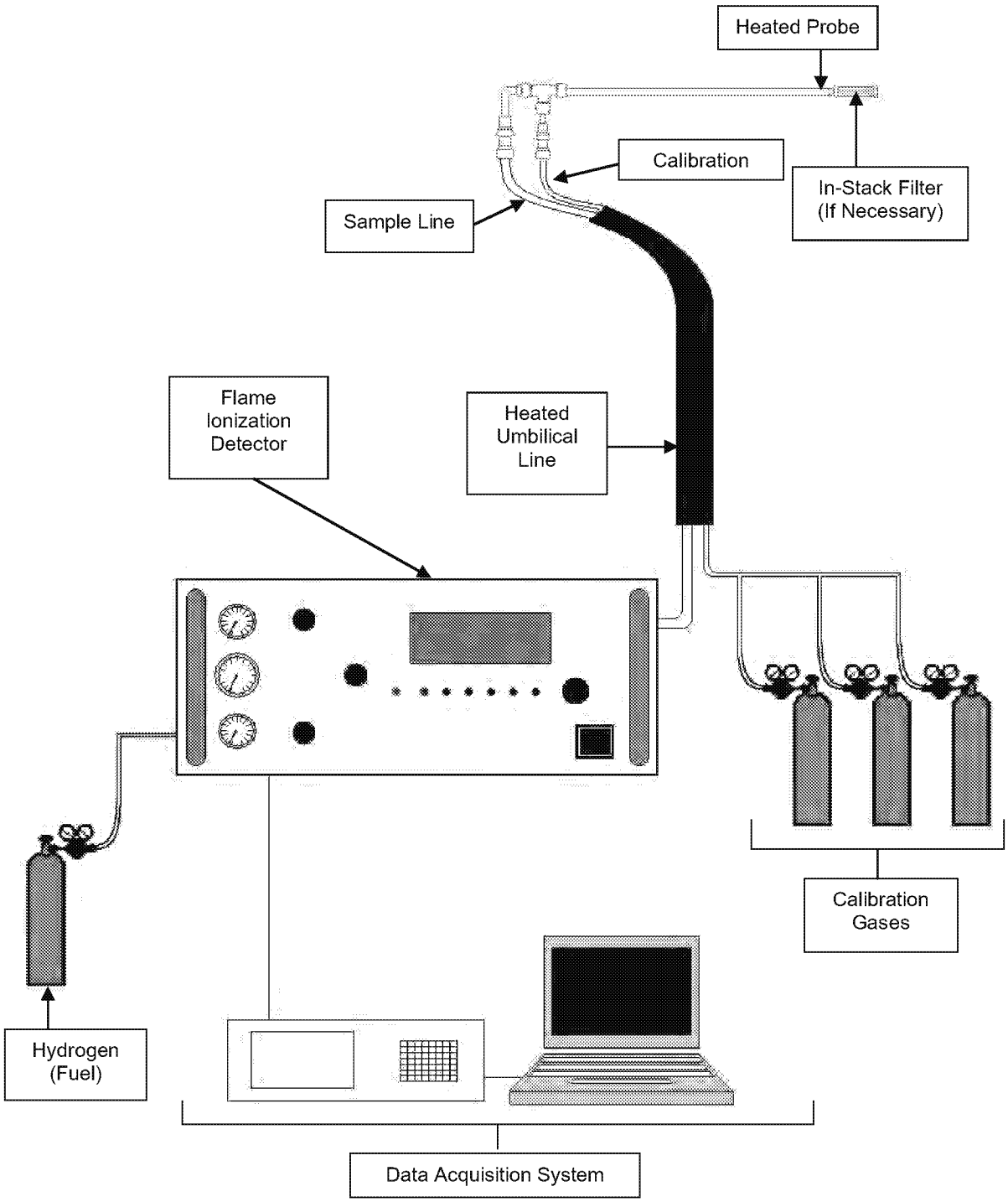

Appendix D- Calculation Nomenclature and Formulas

Client: General Iron Industries, Inc.
Facility: Chicago, IL
Project #: Scrubber Stack

Test Location: Scrubber Stack
Date: 11/15/19

Sample Calculations

O_2 % (dry)

$$20.16\ \% - 0.00\ \% \times \frac{9.993\ \%}{10.05\ \% - 0.00\ \%} = 20.0\ \%$$

CO_2 % (dry)

$$0.36\ \% - 0.00\ \% \times \frac{9.936\ \%}{10.05\ \% - 0.00\ \%} = 0.4\ \%$$

$$C_{gas} = (C - C_o) \times \frac{C_{ma}}{C_m - C_o}$$

where:
C_{gas} = Effluent gas concentration, dry basis, %
C = Average gas concentration indicated by gas analyzer, dry basis, %
C_o = Average of initial and final system calibration bias check responses for the zero gas, %
C_m = Average of initital and final system calibration bias check responses for the upscale calibration gas, %
C_{ma} = Actual concentration of the upscale calibration gas, %

MOSTARDI PLATT

Volumetric Air Flow Calculations

$$Vm\ (std) = 17.647 \times Vm \times \left[\frac{\left(P_{bar} + \left[\frac{DH}{13.6}\right]\right)}{(460 + Tm)}\right] \times Y$$

$$Vw\ (std) = 0.0471 \times Vlc$$

$$Bws = \left[\frac{Vw\ (std)}{Vw\ (std) + Vm\ (std)}\right]$$

$$Md = (0.44 \times \%CO_2) + (0.32 \times \%O_2) + [0.28 \times (100 - \%CO_2 - \%O_2)]$$

$$Ms = Md \times (1 - Bws) + (18 \times Bws)$$

$$Vs = \sqrt{\frac{(Ts + 460)}{Ms \times Ps}} \times \sqrt{DP} \times Cp \times 85.49$$

$$Acfm = Vs \times Area\ (of\ stack\ or\ duct) \times 60$$

$$Scfm = Acfm \times 17.647 \times \left[\frac{Ps}{(460 + Ts)}\right]$$

$$Scfh = Scfm \times 60 \frac{min}{hr}$$

$$Dscfm = Scfm \times (1 - Bws)$$

MOSTARDI PLATT

Volumetric Flow Nomenclature

A = Cross-sectional area of stack or duct, ft2
Bws = Water vapor in gas stream, proportion by volume
Cp = Pitot tube coefficient, dimensionless
Md = Dry molecular weight of gas, lb/lb-mole
Ms = Molecular weight of gas, wet basis, lb/lb-mole
Mw = Molecular weight of water, 18.0 lb/lb-mole
Pbar = Barometric pressure at testing site, in. Hg
Pg = Static pressure of gas, in. Hg (in. H2O/13.6)
DH= Static pressure of gas, in.H2O
Ps = Absolute pressure of gas, in. Hg = Pbar + Pg
Pstd = Standard absolute pressure, 29.92 in. Hg
Acfm = Actual volumetric gas flow rate
Scfm= Volumetric gas flow rate, corrected to standard conditions
Dscfm = Standard volumetric flow rate, corrected to dry conditions
R = Ideal gas constant, 21.85 in. Hg-ft3/°R-lb-mole
Ts = Average stack gas temperature, °F
Tm = Average dry gas meter temperature, oF
Tstd = Standard absolute temperature, 528°R
vs = Gas velocity, ft/sec
Vm(std)= Volume of gas sampled, corrected to standard conditions, scf
Vw(std) = Volume of water vapor in gas sample, corrected to standard conditions, scf
Vlc= Volume of liquid collected
Y = Dry gas meter calibration factor
Δp = Velocity head of gas, in. H2O
K1 = 17.647 °R/in. Hg
%EA = Percent excess air
%CO2 = Percent carbon dioxide by volume, dry basis
%O2 = Percent oxygen by volume, dry basis
%N2 = Percent nitrogen by volume, dry basis
0.264 = Ratio of O2 to N2 in air, v/v
0.28 = Molecular weight of N2 or CO, divided by 100
0.32 = Molecular weight of O2 divided by 100
0.44 = Molecular weight of CO2 divided by 100
13.6 = Specific gravity of mercury (Hg)

MOSTARDI PLATT

Moisture Calculations

$$V_{wc(std)} = \frac{(V_f - V_i)\rho_w R T_{std}}{P_{std} M_w} = 0.04707(V_f - V_i)$$

$$V_{wsg(std)} = \frac{(W_f - W_i)\rho_w R T_{std}}{P_{std} M_w} = 0.04715(W_f - W_i)$$

$$V_{m(std)} = 17.64\, V_m Y \frac{P_{bar} + \frac{\Delta H}{13.6}}{T_m}$$

$$B_{ws} = \frac{V_{wc(std)} + V_{wsg(std)}}{V_{wc(std)} + V_{wsg(std)} + V_{m(std)}}$$

Where:

B_{ws} = Water vapor in gas stream, proportion by volume
M_w = Molecular weight of water, 18.015 lb/lb-mole
P_{bar} = Barometric pressure at the testing site, in. Hg
P_{std} = Standard absolute pressure, 29.92 in. Hg
R = Ideal gas constant, 0.048137 (in. Hg)(ft^3)/(g-mole)(°R) = [21.8348(in. Hg)(ft^3)/(lb-mole)(°R)]/453.592 g-mole/lb-mole
T_m = Absolute average dry gas meter temperature, °R
T_{std} = Standard absolute temperature, 528 °R
V_f = Final volume of condenser water, ml
V_i = Initial volume of condenser water, ml
V_m = Dry gas volume measured by dry gas meter, dcf
$V_{m(std)}$ = Dry gas volume measured by dry gas meter, corrected to standard conditions, scf
$V_{wc(std)}$ = Volume of condensed water vapor, corrected to standard conditions, scf
$V_{wsg(std)}$ = Volume of water vapor collected in silica gel, corrected to standard conditions, scf
W_f = Final weight of silica gel, g
W_i = Initial weight of silica gel, g
Y = Dry gas meter calibration factor
ΔH = Average pressure exerted on dry gas meter outlet by gas sample bag, in. H_2O
ρ_w = Density of water, 0.9982 g/ml
13.6 = Specific gravity of mercury (Hg)
17.64 = T_{std}/P_{std}
0.04707 = ft^3/ml 0.04715 = ft^3/g

MOSTARDI PLATT

Isokinetic Calculation Formulas

1. $V_{w(std)} = V_{lc}\left(\frac{\rho_w}{M_w}\right)\left(\frac{RT_{std}}{P_{std}}\right) = K_2 V_{lc}$

2. $V_{m(std)} = V_m Y \left(\frac{T_{std}}{T_m}\right)\left(\frac{(P_{bar} + (\frac{\Delta H}{13.6}))}{P_{std}}\right) = K_1\ V_m\ Y \frac{(P_{bar} + (\frac{\Delta H}{13.6}))}{T_m}$

3. $B_{ws} = \frac{V_{w(std)}}{(V_{m(std)} + V_{w(std)})}$

4. $M_d = 0.44(\%CO_2) + 0.32(\%O_2) + 0.28(\%N_2)$

5. $M_s = M_d(1 - B_{ws}) + 18.0(B_{ws})$

6. $C_a = \frac{m_a}{V_a \rho_a}$

7. $W_a = C_a V_{aw} \rho_a$

8. $C_{acf} = 15.43 K_i \left(\frac{m_n P_s}{V_{w(std)} + V_{m(std)}\ T_s}\right)$

9. $C_S = (15.43\ \text{grains/gram})(m_n / V_{m(std)})$

10. $v_s = K_p C_p \sqrt{\frac{\Delta P\ T_s}{P_s M_s}}$

11. $Q_{acfm} = v_s A(60_{sec/min})$

12. $Q_{sd} = (3600_{sec/hr})(1 - B_{ws})\, v_s \left(\frac{T_{std} P_s}{T_s P_{std}}\right) A$

13. $E\,(\text{emission rate, lbs/hr}) = Q_{std}(C_s / 7000\ \text{grains/lb})$

14. $IKV = \frac{T_s V_{m(std)} P_{std}}{T_{std} v_s \theta A_n P_s 60(1 - B_{ws})} = K_4 \frac{T_s V_{m(std)}}{P_s v_s A_n \theta (1 - B_{ws})}$

15. $\%EA = \left(\frac{\%O_2 - (0.5\,\%CO)}{0.264\,\%N_2 - (\%O_2 - 0.5\,\%CO)}\right) \times 100$

MOSTARDI PLATT

Isokinetic Nomenclature

A = Cross-sectional area of stack or duct, square feet
A_n = Cross-sectional area of nozzle, square feet
B_{ws} = Water vapor in gas stream, by volume
C_a = Acetone blank residue concentration, g/g
C_{acf} = Concentration of particulate matter in gas stream at actual conditions, gr/acf
C_p = Pitot tube coefficient
C_s = Concentration of particulate matter in gas stream, dry basis, corrected to standard conditions, gr/dscf
IKV = Isokinetic sampling variance, must be 90.0 % ≤ IKV ≤ 110.0%
M_d = Dry molecular weight of gas, lb/lb-mole
M_s = Molecular weight of gas, wet basis, lb/lb-mole
M_w = Molecular weight of water, 18.0 lb/lb-mole
m_a = Mass of residue of acetone after evaporation, grams
P_{bar} = Barometric pressure at testing site, inches mercury
P_g = Static pressure of gas, inches mercury (inches water/13.6)
P_s = Absolute pressure of gas, inches mercury = $P_{bar} + P_g$
P_{std} = Standard absolute pressure, 29.92 inches mercury
Q_{acfm} = Actual volumetric gas flow rate, acfm
Q_{sd} = Dry volumetric gas flow rate corrected to standard conditions, dscfh
R = Ideal gas constant, 21.85 inches mercury cubic foot/°R-lb-mole
T_m = Dry gas meter temperature, °R
T_s = Gas temperature, °R
T_{std} = Absolute temperature, 528°R
V_a = Volume of acetone blank, ml
V_{aw} = Volume of acetone used in wash, ml
W_a = Weight of residue in acetone wash, grams
m_n = Total amount of particulate matter collected, grams
V_{1c} = Total volume of liquid collected in impingers and silica gel, ml
V_m = Volume of gas sample as measured by dry gas meter, dcf
$V_{m(std)}$ = Volume of gas sample measured by dry gas meter, corrected to standard conditions, dscf
v_s = Gas velocity, ft/sec
$V_{w(std)}$ = Volume of water vapor in gas sample, corrected to standard conditions, scf
Y = Dry gas meter calibration factor
ΔH = Average pressure differential across the orifice meter, inches water
Δp = Velocity head of gas, inches water
ρ_a = Density of acetone, 0.7855 g/ml (average)
ρ_w = Density of water, 0.002201 lb/ml
θ = Total sampling time, minutes
K_1 = 17.647 °R/in. Hg
K_2 = 0.04707 ft^3/ml
K_4 = 0.09450/100 = 0.000945
K_p = Pitot tube constant, $85.49 \frac{ft}{sec}\left[\frac{(lb/lb-mole)(in.\ Hg)}{(°R)(in.\ H_2O)}\right]^{1/2}$
%EA = Percent excess air
$\%CO_2$ = Percent carbon dioxide by volume, dry basis
$\%O_2$ = Percent oxygen by volume, dry basis
%CO = Percent carbon monoxide by volume, dry basis
$\%N_2$ = Percent nitrogen by volume, dry basis
0.264 = Ratio of O_2 to N_2 in air, v/v
28 = Molecular weight of N_2 or CO
32 = Molecular weight of O_2
44 = Molecular weight of CO_2
13.6 = Specific gravity of mercury (Hg)

MOSTARDI PLATT

ppmv to lb/hr Conversion Calculations

1. $$ppm\ SO_2 \times 1.660 \times 10^{-7} = \frac{lbs/SO_2}{scf}$$

$$\frac{lbs\ SO_2}{scf} \times \frac{scf}{min} \times \frac{60\ min}{hr} = \frac{lbs\ SO_2}{hr}$$

2. $$ppm\ NO_x \times 1.194 \times 10^{-7} = \frac{lbs/NO_{x2}}{scf}$$

$$\frac{lbs\ NO_x}{scf} \times \frac{scf}{min} \times \frac{60\ min}{hr} = \frac{lbs\ NO_x}{hr}$$

3. $$ppm\ CO \times 7.266 \times 10^{-8} = \frac{lbs/CO}{scf}$$

$$\frac{lbs\ CO}{scf} \times \frac{scf}{min} \times \frac{60\ min}{hr} = \frac{lbs\ CO}{hr}$$

4. $$ppm\ C_3H_8 \times 1.142 \times 10^{-7} = \frac{lbsC_3H_8}{scf}$$

$$\frac{lbs\ C_3H_8}{scf} \times \frac{scf}{min} \times \frac{60\ min}{hr} = \frac{lbs\ C_3H_8}{hr}$$

5. $$ppm\ CH_4 \times 4.164 \times 10^{-8} = \frac{lbs/CH_4}{scf}$$

$$\frac{lbs\ CH_4}{scf} \times \frac{scf}{min} \times \frac{60\ min}{hr} = \frac{lbs\ CH_4}{hr}$$

6. $$ppm\ NMHC\ as\ C_3H_8 \times 9.3427 \times 10^{-8} = \frac{lbs\ C}{scf}$$

$$\frac{lbs\ C}{scf} \times \frac{lbsscf}{min} \times \frac{60\ min}{hr} = \frac{lbs\ C}{hr}$$

MOSTARDI PLATT

Volatile Organic Compound Calculations

Methane ppm as Propane ppm

$$CH4_P = \frac{CH4 * RF}{C_{COR}}$$

Ethane ppm as Propane ppm

$$C2H6_P = \frac{C2H6 * RF}{C_{COR}}$$

NMHC as Propane

$$NMHC_P = THC - (CH4_P + C2H6_P)$$

NMHC as Methane

$$NMHC_M = NMHC_P * C_{COR}$$

Where:
$NMHC_P$ = Non-methane/non-ethane hydrocarbons as propane, wet basis, ppm
$NMHC_M$ = Non-methane/non-ethane hydrocarbons as methane, wet basis, ppm
THC = Total hydrocarbons, wet basis, ppm
CH4 = Methane gas concentration, wet basis, ppm
$CH4_p$ = Methane gas concentration as propane, wet basis, ppm
C2H6 = Ethane gas concentration, wet basis, ppm
$C2H6_p$ = Ethane gas concentration as propane, wet basis, ppm
C3H8 = Propane gas concentration, wet basis, ppm
RF = Volatile Organic Compound Response Factor
C_{COR} = Carbon correction value for volatile organic compounds

Appendix E- Laboratory Sample Analysis

Mostardi Platt

Chain-of-Custody Form	
Project Number: M193103	Date Results Required: CH4 and C2H6
Client: General Iron Industries, Inc.	TAT Required:
Plant/Test Location: RTO Inlet and Scrubber Stack	Project Supervisor: R. Sollars
P.O. # for Lab Work:	

Sample Number	Sample Date	Sample Point Identification	# of Conts	Sub Lab	Analysis Required	Volume, mls
001	11/15/19	Run 1 Inlet Bag	1	N/A	M18	
002	11/15/19	Run 1 Stack Bag	1	N/A	M18	
003	11/18/19	Run 2 Inlet Bag	1	N/A	M18	
004	11/18/19	Run 2 Stack Bag	1	N/A	M18	
005	11/18/19	Run 3 Inlet Bag	1	N/A	M18	
006	11/18/19	Run 3 Stack Bag	1	N/A	M18	
007	11/18/19	Run 4 Inlet Bag	1	N/A	M18	
008	11/18/19	Run 4 Stack Bag	1	N/A	M18	

Delivered to Lab by: R. Sollars Date/Time: 11/18/19 8:00 p.m.	Received by: Date/Time: 11/19/19	Processed by: Date/Time: 11/21/19

Laboratory Notes:

Client:	General Iron Industries, Inc.	Analysis Date:	11/21/2019
Facility:	Chicago, IL	Analysis Location:	Elmhurst
Test Location:	RTO Inlet and Scrubber Stack	Analyst:	BWH
Project Number:	M193103		
Method:	18		
Date Samples Received:	11/21/2019		

Sampling Date		11/15/2019	11/18/2019	11/18/2019	11/18/2019
COC Number		001	003	005	007
	UNITS	**Inlet Run 1**	**Inlet Run 2**	**Inlet Run 3**	**Inlet Run 4**
Methane	ppmv	3.65	3.59	3.68	4.25
Ethane	ppmv	0.00	0.00	0.00	0.00

Sampling Date		11/15/2019	11/18/2019	11/18/2019	11/18/2019
COC Number		002	004	006	008
	UNITS	**Stack Run 1**	**Stack Run 2**	**Stack Run 3**	**Stack Run 4**
Methane	ppmv	1.10	2.49	1.11	1.13
Ethane	ppmv	0.00	0.00	0.00	0.00

Client:	General Iron Industries, Inc.	**Analysis Date:**	11/21/2019		
Facility:	Chicago, IL	**Analysis Location:**	Elmhurst		
Test Location:	RTO Inlet and Scrubber Stack	**Analyst:**	BWH		
Project Number:	M193103				
Method:	18				
Date Samples Received:	11/21/2019				
Standard ppmv CH_4	**Area**	**Response Factor**	**Calculated Value ppmv**	**Calibration Average**	**Slope of Least Square Regression Curve**
2.93	4.8599	1.6587	**2.91**	**2.92**	**1.6714**
2.93	4.9208	1.6795	**2.94**		
2.93	4.8749	1.6638	**2.92**		
5.934	9.8272	1.6561	**5.88**	**5.93**	**Response Factor Ave**
5.934	9.8662	1.6627	**5.90**		**1.6698**
5.934	10.0231	1.6891	**6.00**		
8.779	14.4004	1.6403	**8.62**	**8.79**	**R^2**
8.779	14.8414	1.6906	**8.88**		**0.9990**
8.779	14.8156	1.6876	**8.86**		
COC Number	**Sample Date**	**Sample ID**	**Sample Area**	**ppmv CH_4**	**Run Average ppmv CH_4**
001	11/15/2019	Inlet Run 1	6.0946	3.65	**3.65**
001	11/15/2019	Inlet Run 1	6.1524	3.68	
001	11/15/2019	Inlet Run 1	6.0780	3.64	
003	11/18/2019	Inlet Run 2	6.0564	3.62	**3.59**
003	11/18/2019	Inlet Run 2	6.0314	3.61	
003	11/18/2019	Inlet Run 2	5.9262	3.55	
005	11/18/2019	Inlet Run 3	6.1524	3.68	**3.68**
005	11/18/2019	Inlet Run 3	6.0842	3.64	
005	11/18/2019	Inlet Run 3	6.2208	3.72	
007	11/18/2019	Inlet Run 4	7.0920	4.24	**4.25**
007	11/18/2019	Inlet Run 4	7.1428	4.27	
007	11/18/2019	Inlet Run 4	7.0826	4.24	
002	11/15/2019	Stack Run 1	1.8518	1.11	**1.10**
002	11/15/2019	Stack Run 1	1.8190	1.09	
002	11/15/2019	Stack Run 1	1.8330	1.10	
004	11/18/2019	Stack Run 2	4.1170	2.46	**2.49**
004	11/18/2019	Stack Run 2	4.1009	2.45	
004	11/18/2019	Stack Run 2	4.2470	2.54	
006	11/18/2019	Stack Run 3	1.8456	1.10	**1.11**
006	11/18/2019	Stack Run 3	1.9222	1.15	
006	11/18/2019	Stack Run 3	1.7771	1.06	
008	11/18/2019	Stack Run 4	1.8456	1.10	**1.13**
008	11/18/2019	Stack Run 4	1.9222	1.15	
008	11/18/2019	Stack Run 4	1.8756	1.12	
Standard ppm CH_4	**Area**	**Calculated Value**	**Average**	**Pre-Post Agreement**	
5.93	10.0195	5.99	6.03	1.72%	
	10.0502	6.01			
	10.1572	6.08			

Client:	General Iron Industries, Inc.	**Analysis Date:**	11/21/2019		
Facility:	Chicago, IL	**Analysis Location:**	Elmhurst		
Test Location:	RTO Inlet and Scrubber Stack	**Analyst:**	BWH		
Project Number:	M193103				
Method:	18				
Date Samples Received:	11/21/2019				

Standard ppmv C_2H_6	**Area**	**Response Factor**	**Calculated Value**	**Calibration Average**	**Slope of Least Square Regression Curve**
16.29	48.4579	2.9747	**15.46**		
16.29	47.9782	2.9453	**15.30**	**15.44**	**3.1350**
16.29	48.7933	2.9953	**15.56**		
25.74	79.9337	3.1054	**25.50**		**Response Factor Ave**
25.74	79.4434	3.0864	**25.34**	**25.45**	**3.0810**
25.74	79.9672	3.1067	**25.51**		
42.67	134.3394	3.1483	**42.85**		**R^2**
42.67	136.0931	3.1894	**43.41**	**43.17**	**0.9998**
42.67	135.5771	3.1773	**43.25**		

COC Number	**Sample Date**	**Sample ID**	**Sample Area**	**ppmv C_2H_6**	**Run Average ppmv C_2H_6**
001	11/15/2019	Inlet Run 1	0.0000	0.00	
001	11/15/2019	Inlet Run 1	0.0000	0.00	**0.00**
001	11/15/2019	Inlet Run 1	0.0000	0.00	
003	11/18/2019	Inlet Run 2	0.0000	0.00	
003	11/18/2019	Inlet Run 2	0.0000	0.00	**0.00**
003	11/18/2019	Inlet Run 2	0.0000	0.00	
005	11/18/2019	Inlet Run 3	0.0000	0.00	
005	11/18/2019	Inlet Run 3	0.0000	0.00	**0.00**
005	11/18/2019	Inlet Run 3	0.0000	0.00	
007	11/18/2019	Inlet Run 4	0.0000	0.00	
007	11/18/2019	Inlet Run 4	0.0000	0.00	**0.00**
007	11/18/2019	Inlet Run 4	0.0000	0.00	
002	11/15/2019	Stack Run 1	0.0000	0.00	
002	11/15/2019	Stack Run 1	0.0000	0.00	**0.00**
002	11/15/2019	Stack Run 1	0.0000	0.00	
004	11/18/2019	Stack Run 2	0.0000	0.00	
004	11/18/2019	Stack Run 2	0.0000	0.00	**0.00**
004	11/18/2019	Stack Run 2	0.0000	0.00	
006	11/18/2019	Stack Run 3	0.0000	0.00	
006	11/18/2019	Stack Run 3	0.0000	0.00	**0.00**
006	11/18/2019	Stack Run 3	0.0000	0.00	
008	11/18/2019	Stack Run 4	0.0000	0.00	
008	11/18/2019	Stack Run 4	0.0000	0.00	**0.00**
008	11/18/2019	Stack Run 4	0.0000	0.00	

Standard ppm C_2H_6	**Area**	**Calculated Value**	**Average**	**Pre-Post Agreement**
	79.7794	25.448		
25.74	81.9408	26.137	25.81	1.43%
	81.0566	25.855		

Appendix F – Reference Method Test Data (Computerized Sheets)

Client: General Iron Industries, Inc.
Facility: Chicago, IL
Project #: M193103
Test Location: RTO Inlet and Scrubber Stack
Operating Condition: Normal
Date: 11/15/19
Run 1

Time	THC In ppmv	THC Out ppmv	
10:33	339.00	3.57	
10:34	229.84	2.17	
10:35	240.32	5.36	
10:36	198.60	5.80	
10:37	295.09	5.53	
10:38	388.12	16.71	
10:39	417.22	3.99	
10:40	464.81	2.59	
10:41	295.28	5.56	
10:42	945.49	3.00	
10:43	773.96	15.57	
10:44	484.38	8.88	
10:45	484.38	8.88	
10:46	476.64	3.16	
10:47	417.88	14.46	
10:48	660.39	6.12	
10:49	599.36	2.97	
10:50	347.74	13.28	
10:51	304.28	4.35	
10:52	312.66	2.70	
10:53	270.32	17.48	
10:54	395.83	5.14	
10:55	371.74	3.09	
10:56	387.56	15.28	
10:57	354.71	4.74	
10:58	293.17	3.15	
10:59	561.92	15.95	
11:00	661.89	5.28	
11:01	403.55	3.41	
11:02	700.73	12.86	Port Change
11:17	536.59	17.28	
11:18	906.04	4.79	
11:19	516.47	4.12	
11:20	564.30	13.21	
11:21	734.47	7.95	
11:22	642.54	9.34	
11:23	671.77	8.03	
11:24	1782.64	9.85	RTO down
11:57	641.10	3.47	
11:58	678.59	5.82	
11:59	530.06	10.58	RTO down
12:36	279.67	3.85	
12:37	236.56	12.02	
12:38	277.69	11.56	
12:39	334.50	3.26	
12:40	184.45	6.56	
12:41	296.45	11.41	
12:42	351.81	6.99	
12:43	262.57	8.37	
12:44	210.46	8.37	
12:45	276.96	8.37	
12:46	294.89	8.37	
12:47	220.09	8.37	
12:48	573.44	8.37	
12:49	541.40	8.37	
12:50	858.66	8.26	
12:51	1606.43	8.37	RTO down
13:15	445.38	3.59	
13:16	453.09	4.75	
13:17	843.08	19.91	
Average	**497.20**	**7.90**	
Min	184.45	2.17	
Max	1782.64	19.91	

Client: General Iron Industries, Inc.
Facility: Chicago, IL
Project #: M193103
Test Location: RTO Inlet and Scrubber Stack
Operating Condition: Normal
Date: 11/18/19
Run 2

Time	THC In ppmv	THC Out ppmv
8:51	408.08	6.04
8:52	302.82	1.97
8:53	567.66	0.90
8:54	418.45	14.41
8:55	535.03	3.07
8:56	1008.67	1.43
8:57	630.35	6.88
8:58	512.24	2.43
8:59	535.88	1.16
9:00	893.48	14.59
9:01	593.37	2.74
9:02	570.40	1.33
9:03	327.03	4.44
9:04	272.39	1.65
9:05	283.97	0.86
9:06	314.08	14.02
9:07	579.59	2.87
9:08	684.49	1.15
9:09	434.86	18.00
9:10	481.66	2.59
9:11	327.41	1.12
9:12	520.18	8.27
9:13	762.81	3.83
9:14	510.71	1.74
9:15	773.03	33.21
9:16	1450.49	8.18
9:17	1153.67	2.44
9:18	763.20	6.90
9:19	571.70	3.58
9:20	673.29	1.86
9:42	971.26	7.70
9:43	457.48	2.18
9:44	417.87	1.08
9:45	387.10	19.88
9:46	870.30	4.29
9:47	434.50	1.28
9:48	319.41	12.02
9:49	595.99	3.85
9:50	567.14	1.56
9:51	575.10	6.96
9:52	518.34	3.07
9:53	594.18	1.22
9:54	365.46	16.82
9:55	662.12	4.29
9:56	546.99	1.55
9:57	427.90	3.57
9:58	330.58	1.89
9:59	358.60	1.35
10:00	987.56	13.31
10:01	719.23	4.03
10:02	658.39	1.61
10:03	858.15	28.14
10:04	1143.76	4.89
10:05	641.08	1.51
10:06	494.90	6.56
10:07	609.05	2.60
10:08	748.20	1.37
10:09	788.59	11.57
10:10	617.77	2.40
10:11	416.37	0.92
Average	**599.10**	**5.80**
Min	272.39	0.86
Max	1450.49	33.21

Client: General Iron Industries, Inc.
Facility: Chicago, IL
Project #: M193103
Test Location: RTO Inlet and Scrubber Stack
Operating Condition: Normal
Date: 11/18/19
Run 3

Time	THC In ppmv	THC Out ppmv
11:22	200.18	6.46
11:23	352.76	3.84
11:24	344.47	14.44
11:25	529.40	5.79
11:26	767.06	3.70
11:27	481.90	4.82
11:28	252.25	4.56
11:29	419.35	3.72
11:30	733.55	7.35
11:31	473.02	5.42
11:32	767.46	3.90
11:33	403.32	6.36
11:34	320.82	4.68
11:35	286.52	3.21
11:36	322.03	5.25
11:37	353.00	4.49
11:38	521.53	3.31
11:39	542.84	10.55
11:40	910.65	7.11
11:41	585.29	3.20
11:42	507.59	10.55
11:43	580.15	5.96
11:44	528.01	3.08
11:45	503.39	8.37
11:46	659.78	6.28
11:47	1058.02	4.82
11:48	1072.35	8.01
11:49	978.96	6.73
11:50	611.16	3.45
11:51	449.42	20.61
12:16	730.96	3.70
12:17	535.56	1.27
12:18	437.46	7.74
12:19	353.55	4.19
12:20	468.43	1.14
12:21	363.74	6.74
12:22	318.65	2.63
12:23	420.97	0.99
12:24	418.95	6.99
12:25	362.25	1.99
12:26	411.45	1.13
12:27	489.16	6.98
12:28	487.92	2.43
12:29	485.19	0.83
12:30	515.39	11.17
12:31	593.53	2.54
12:32	445.61	0.90
12:33	360.00	10.06
12:34	534.22	4.32
12:35	317.07	1.46
12:36	310.26	7.39
12:37	352.53	2.72
12:38	675.80	1.56
12:39	662.50	14.81
12:40	471.52	3.22
12:41	434.78	1.64
12:42	702.03	9.46
12:43	702.57	5.63
12:44	817.08	2.21
12:45	734.51	9.70
Average	**523.80**	**5.50**
Min	200.18	0.83
Max	1072.35	20.61

Client: General Iron Industries, Inc.
Facility: Chicago, IL
Project #: M193103
Test Location: RTO Inlet and Scrubber Stack
Operating Condition: Normal
Date: 11/18/19
Run 4

Time	THC In ppmv	THC Out ppmv
14:40	615.90	3.55
14:41	480.73	1.57
14:42	846.34	19.53
14:43	689.70	3.84
14:44	857.24	2.07
14:45	1345.82	24.45
14:46	811.18	5.09
14:47	768.42	1.91
14:48	716.54	26.21
14:49	1015.13	9.19
14:50	1840.37	4.37
14:51	1229.12	11.59
14:52	819.70	5.45
14:53	452.10	2.42
14:54	587.43	21.32
14:55	675.99	4.13
14:56	1034.00	2.31
14:57	1166.43	5.13
14:58	523.14	4.07
14:59	431.15	1.95
15:00	453.70	11.48
15:01	407.96	2.63
15:02	876.59	1.92
15:03	1554.82	9.13
15:04	775.04	4.55
15:05	625.89	2.00
15:06	793.30	8.42
15:07	554.00	3.22
15:08	492.54	1.75
15:09	732.07	20.83
17:26	376.44	1.29
17:27	418.15	14.46
17:28	318.16	3.11
17:29	298.33	1.18
17:30	137.05	2.26
17:31	93.63	1.30
17:32	645.35	1.39
17:33	487.04	15.22
17:34	548.23	3.67
17:35	589.60	1.75
17:36	405.06	5.56
17:37	329.12	2.64
17:38	502.07	2.91
17:39	550.82	16.98
17:40	471.79	3.72
17:41	463.26	1.81
17:42	518.18	13.18
17:43	362.45	3.23
17:44	378.49	1.82
17:45	744.13	19.36
17:46	717.97	5.26
17:47	436.86	2.10
17:48	429.61	11.31
17:49	411.03	3.78
17:50	326.23	1.96
17:51	800.82	16.16
17:52	636.00	4.89
17:53	741.64	2.43
17:54	677.35	14.07
17:55	556.24	4.57
Average	**642.40**	**6.80**
Min	93.63	1.18
Max	1840.37	26.21

Client: General Iron Industries, Inc.
Facility: Chicago, IL
Test Location: Scrubber Stack
Project #: M193103

Run 1
Date: 11/15/2019

Time	O2 % (dry)	CO2 % (dry)
10:35	20.20	0.30
10:36	20.30	0.30
10:37	20.30	0.30
10:38	20.40	0.30
10:39	20.40	0.30
10:40	20.30	0.40
10:41	20.30	0.40
10:42	20.30	0.40
10:43	20.30	0.40
10:44	20.30	0.40
10:45	20.40	0.40
10:46	20.40	0.30
10:47	20.40	0.30
10:48	20.30	0.30
10:49	20.20	0.40
10:50	20.20	0.40
10:51	20.30	0.30
10:52	20.30	0.30
10:53	20.10	0.40
10:54	20.20	0.40
10:55	20.10	0.40
10:56	20.10	0.40
10:57	20.30	0.30
10:58	20.20	0.40
10:59	20.00	0.40
11:04	20.40	0.30
11:05	20.50	0.30
11:06	20.50	0.30
11:07	20.40	0.40
11:08	20.30	0.40
11:09	20.30	0.40
11:10	20.34	0.30
11:11	20.40	0.30
11:12	20.30	0.30
11:13	20.80	0.40
11:14	20.50	0.40
11:15	20.40	0.40
11:16	20.40	0.40
11:17	20.30	0.40
11:18	20.10	0.30
11:19	20.10	0.40
11:20	19.90	0.50
11:21	20.10	0.40
11:22	20.40	0.20
11:23	19.90	0.60
11:24	19.90	0.50
11:25	20.40	0.20
11:58	20.00	0.40
11:59	19.90	0.40
12:00	20.20	0.20
12:37	19.90	0.40
12:38	19.80	0.40
12:39	19.90	0.40
12:40	19.80	0.40
12:41	20.00	0.30
12:42	19.90	0.40
12:43	19.70	0.40
12:44	20.00	0.30
12:45	20.00	0.30
12:46	19.80	0.40
12:47	19.90	0.40
12:48	19.90	0.40
12:49	19.90	0.40
12:50	19.90	0.40
12:51	19.90	0.40
12:52	19.90	0.40
12:53	19.90	0.40
13:15	20.00	0.30
13:16	20.00	0.30
13:17	20.00	0.40
13:18	20.00	0.30
13:19	20.00	0.40
0.55	**20.16**	**0.36**
Min	19.70	0.20
Max	20.80	0.60

Run 2
Date: 11/18/2019

Time	O2 % (dry)	CO2 % (dry)
8:52	13.80	5.10
8:53	19.20	1.40
8:54	20.50	0.70
8:55	20.50	0.60
8:56	20.40	0.60
8:57	20.50	0.60
8:58	20.60	0.50
8:59	20.50	0.40
9:00	20.60	0.40
9:01	20.50	0.60
9:02	20.50	0.40
9:03	20.70	0.30
9:04	20.70	0.30
9:05	20.60	0.30
9:06	20.70	0.30
9:07	20.60	0.40
9:08	20.50	0.40
9:09	20.60	0.40
9:10	20.60	0.40
9:11	20.60	0.40
9:12	20.60	0.30
9:13	20.50	0.40
9:14	20.40	0.40
9:15	20.60	0.40
9:16	20.50	0.40
9:17	20.30	0.60
9:18	20.40	0.60
9:19	20.50	0.40
9:20	20.60	0.40
9:43	20.60	0.30
9:44	20.70	0.30
9:45	20.40	0.40
9:46	20.50	0.30
9:47	20.60	0.30
9:48	20.30	0.50
9:49	20.50	0.30
9:50	20.50	0.30
9:51	20.40	0.40
9:52	20.50	0.30
9:53	20.50	0.30
9:54	20.30	0.40
9:55	20.50	0.30
9:56	20.60	0.30
9:57	20.50	0.30
9:58	20.50	0.30
9:59	20.20	0.60
10:00	20.30	0.40
10:01	20.40	0.40
10:02	20.40	0.40
10:03	20.20	0.60
10:04	20.40	0.40
10:05	20.40	0.30
10:06	20.30	0.40
10:07	20.40	0.40
10:08	20.40	0.40
10:09	20.30	0.50
10:10	20.40	0.30
9:44	20.70	0.30
9:45	20.40	0.40
9:46	20.50	0.30
9:47	20.60	0.30
9:48	20.30	0.50
9:49	20.50	0.30
9:50	20.50	0.30
9:51	20.40	0.40
9:52	20.50	0.30
9:53	20.50	0.30
9:54	20.30	0.40
9:55	20.50	0.30
9:56	20.60	0.30
9:57	20.50	0.30
9:58	20.50	0.30
9:59	20.20	0.60
10:00	20.30	0.40
10:01	20.40	0.40
10:02	20.40	0.40
10:03	20.20	0.60
10:04	20.40	0.40
10:05	20.40	0.30
10:06	20.30	0.40
10:07	20.40	0.40
10:08	20.40	0.40
10:09	20.30	0.50
10:10	20.40	0.30
Average	**20.37**	**0.46**
Min	13.80	0.30
Max	20.70	5.10

Run 3
Date: 11/18/2019

Time	O2 % (dry)	CO2 % (dry)
11:22	20.80	0.10
11:23	20.30	0.40
11:24	20.30	0.40
11:25	20.50	0.30
11:26	20.60	0.30
11:27	20.50	0.30
11:28	20.50	0.40
11:29	20.40	0.40
11:30	20.40	0.40
11:31	20.60	0.30
11:32	20.60	0.30
11:33	20.50	0.30
11:34	20.60	0.30
11:35	20.40	0.40
11:36	20.40	0.40
11:37	20.50	0.30
11:38	20.40	0.40
11:39	20.30	0.40
11:40	20.40	0.40
11:41	20.40	0.40
11:42	20.40	0.40
11:43	20.50	0.30
11:44	20.50	0.40
11:45	20.20	0.50
11:46	20.20	0.50
11:47	20.20	0.40
11:48	20.40	0.30
11:49	20.50	0.20
11:50	20.30	0.40
11:51	20.30	0.40
11:52	20.50	0.30
12:17	20.20	0.30
12:18	20.30	0.30
12:19	20.50	0.20
12:20	20.40	0.30
12:21	20.30	0.30
12:22	20.30	0.30
12:23	20.20	0.40
12:24	20.30	0.30
12:25	20.40	0.30
12:26	20.20	0.40
12:27	20.20	0.30
12:28	20.30	0.40
12:29	20.10	0.40
12:30	20.30	0.30
12:31	20.40	0.30
12:32	20.20	0.40
12:33	20.30	0.30
12:34	20.30	0.30
12:35	20.20	0.40
12:36	20.20	0.40
12:37	20.30	0.30
12:38	20.20	0.30
12:39	20.20	0.30
12:40	20.20	0.40
12:41	20.10	0.40
12:42	20.10	0.40
12:43	20.20	0.30
Average	**20.35**	**0.34**
Min	20.10	0.10
Max	20.90	0.50

Run 4
Date: 11/18/2019

Time	O2 % (dry)	CO2 % (dry)
16:41	20.80	0.20
16:42	20.50	0.40
16:43	20.50	0.40
16:44	20.30	0.50
16:45	20.50	0.40
16:46	20.50	0.40
16:47	20.50	0.40
16:48	20.30	0.70
16:49	20.20	0.80
16:50	20.30	0.50
16:51	20.50	0.40
16:52	20.70	0.30
16:53	20.70	0.40
16:54	20.50	0.40
16:55	20.40	0.50
16:56	20.40	0.50
16:57	20.60	0.40
16:58	20.70	0.30
16:59	20.70	0.30
17:00	20.50	0.40
17:01	20.60	0.40
17:02	20.20	0.70
17:03	20.50	0.40
17:04	20.60	0.40
17:05	20.60	0.40
17:06	20.50	0.40
17:07	20.60	0.40
17:08	20.60	0.40
17:09	20.60	0.40
17:10	20.70	0.40
17:27	19.60	1.10
17:28	20.40	0.50
17:29	20.70	0.40
17:30	20.60	0.40
17:31	20.60	0.40
17:32	20.60	0.40
17:33	20.50	0.40
17:34	20.50	0.40
17:35	20.60	0.40
17:36	20.50	0.40
17:37	20.60	0.40
17:38	20.70	0.30
17:39	20.60	0.40
17:40	20.50	0.40
17:41	20.60	0.40
17:42	20.50	0.40
17:43	20.60	0.40
17:44	20.60	0.40
17:45	20.40	0.50
17:46	20.60	0.40
17:47	20.50	0.40
17:48	20.40	0.40
17:49	20.60	0.30
17:50	20.50	0.40
17:51	20.40	0.50
17:52	20.40	0.50
17:53	20.40	0.50
17:54	20.40	0.50
17:55	20.50	0.40
17:56	20.60	0.40
Average	**20.51**	**0.43**
Min	19.60	0.20
Max	20.80	1.10

Client:	General Iron Industries, Inc.
Facility:	Chicago, IL
Test Location:	Scrubber Stack
Project #:	M193103
Test Method:	5/202
Test Engineer:	JRK
Test Technician:	MAK1/KJB

	R1	R2	R3	R4
Temp ID:	CM2	CM2	CM2	CM2
Meter ID:	CM2	CM2	CM2	CM2
Pitot ID:	569A	569A	569A	509A
Filter ID:	14068	14015	14338	14016
Filter Pre-Weight (grams):	0.40702	0.46113	0.46407	
Nozzle Diameter (Inches):	0.246	0.246	0.246	0.246
Meter Calibration Date:	11/4/2019	11/4/2019	11/4/2019	11/4/2019
Meter Calibration Factor (Y):	1.011	1.011	1.011	1.011
Meter Orifice Setting (Delta H):	1.883	1.883	1.883	1.883
Nozzle Kit ID Number and Material:	Teflon Kit #6	Teflon Kit #6	Teflon Kit #6	Teflon Kit #6

Pitot Tube Coefficient:	0.840
Probe Length (Feet):	7.0
Probe Liner Material:	Glass
Sample Plane:	Horizontal
Port Length (Inches):	6.00
Port Size (Diameter, Inches):	3.00
Port Type:	Nipple
Duct Shape:	Circular
Diameter (Feet):	6.167
Duct Area (Square Feet):	29.870
Upstream Diameters:	1.4
Downstream Diameters:	2.0
Number of Ports Sampled:	2
Number of Points per Port:	12
Minutes per Point:	2.5
Minutes per Reading:	2.5
Total Number of Traverse Points:	24
Test Length (Minutes):	60
Train Type:	Anderson Box
Source Condition:	Normal
Diluent Model/Serial Number:	Servomex 01440D1/3934
Moisture Balance ID:	S10-82
# of Runs	4

Run 1-Method 5/202

Client: General Iron Industries, Inc. | **Date: 11/15/19**
Facility: Chicago, IL | **Start Time: 10:33**
Test Location: Scrubber Stack | **End Time: 13:18**
Source Condition: Normal

DRY GAS METER CONDITIONS			STACK CONDITIONS		
ΔH:	1.44	in. H_2O	Static Pressure	0.30	in. H_2O
Meter Temperature, Tm:	43.4	°F	Flue Pressure (Ps):	29.69	in. Hg. abs.
Sqrt ΔP:	0.675	in. H_2O	Carbon Dioxide:	0.36	%
Stack Temperature, Ts:	100.7	°F	Oxygen:	20.16	%
Meter Volume, Vm:	42.130	ft^3	Nitrogen:	79.48	%
Meter Volume, Vmstd:	44.464	dscf	Gas Weight dry, Md:	28.864	lb/lb mole
Meter Volume, Vwstd:	3.471	wscf	Gas Weight wet, Ms:	28.136	lb/lb mole
Isokinetic Variance:	108.2	%I	Excess Air:	---	%
Heat Input, mmBtu/hr		Heat Input, mmBtu/hr	Gas Velocity, Vs:	39.707	fps
Test Length:	60.00	in mins.	Volumetric Flow:	71,164	acfm
Nozzle Diameter:	0.246	in inches	Volumetric Flow:	62,043	dscfm
Barometric Pressure:	29.67	in Hg	Volumetric Flow:	66,498	scfm
Filter ID:	14068		Calculated Fo:	2.06	
Filter Pre Weight (grams):	0.40702		Fo Validity:	#N/A	

MOISTURE DETERMINATION

Initial Impinger Content:	1727.1	ml	Silica Initial Wt.	251.4	grams
Final Impinger Content:	1776.7	ml	Silica Final Wt.	275.5	grams
Impinger Difference:	49.6	ml	Silica Difference:	24.1	grams

Total Water Gain: 73.7 | Moisture, Bws: 0.072 | **Supersaturation Value, Bws: 0.067**

Port-Point No.	Clock Time	Velocity Head Δp in. H2O	Orifice ΔH in. H2O	Actual Meter Vol. ft^3	Stack Temp °F	Meter Temp Inlet °F	Meter Temp Outlet °F	Probe Temp °F	Filter Exit Temp °F	Impinger Exit Temp °F
1-1	10:33:00	0.36	1.10	80.845	98	39	40	265	255	38
1-2	10:35:30	0.35	1.10	82.251	99	39	39	265	261	38
1-3	10:38:00	0.40	1.30	83.640	98	39	40	265	263	40
1-4	10:40:30	0.43	1.40	85.120	98	40	40	265	265	42
1-5	10:43:00	0.45	1.40	86.660	97	40	39	265	265	44
1-6	10:45:30	0.40	1.30	88.220	103	41	40	265	266	47
1-7	10:48:00	0.41	1.30	89.690	100	42	40	265	266	48
1-8	10:50:30	0.46	1.50	91.200	99	42	40	265	264	51
1-9	10:53:00	0.51	1.60	92.790	99	44	41	265	265	53
1-10	10:55:30	0.51	1.60	94.470	100	44	41	265	266	55
1-11	10:58:00	0.53	1.70	96.150	100	45	41	265	265	57
1-12	11:00:30	0.51	1.60	97.860	102	45	42	265	265	58
	11:03:00			99.530						
2-1	11:17:00	0.55	1.70	99.530	106	43	43	265	263	38
2-2	11:19:30	0.57	1.80	101.270	99	43	43	265	264	40
2-3	11:22:00	0.56	1.70	103.050	99	43	43	265	264	41
2-4	11:24:30	0.56	1.80	104.810	100	43	42	265	265	42
	11:25:00			105.050						
2-4	11:57:00	0.49	1.50	105.050	104	43	42	265	265	37
2-5	11:59:00	0.54	1.70	106.690	91	45	44	265	265	40
	12:00:00			109.200						
2-5	12:36:00	0.45	1.40	109.200	103	46	46	265	264	39
2-6	12:37:30	0.45	1.40	110.790	105	46	46	265	264	40
2-7	12:40:00	0.44	1.40	112.370	110	47	46	265	266	45
2-8	12:42:30	0.43	1.40	113.920	104	47	46	265	266	46
2-9	12:45:00	0.41	1.30	115.480	101	47	46	265	266	49
2-10	12:47:30	0.38	1.20	116.990	104	47	46	265	264	54
2-11	12:50:00	0.39	1.20	118.450	104	48	47	265	263	54
	12:52:00			119.930						
2-11	13:15:00	0.40	1.30	119.930	98	48	47	264	264	38
2-12	13:15:30	0.42	1.30	121.450	99	48	47	264	265	37
	13:18:00			122.975						
Total	1:00:00			42.130		43.9	42.9			
Average			1.44		100.7	43.4				
Min			1.10		91.0	39.0				
Max			1.80		110.0	48.0				

IMPINGER WEIGHT SHEET - RUN 1

Client:	General Iron Industries, Inc.	Scale Calibration Check Date:	11/15/2019
Facility:	Chicago, IL	Scale Calibration Check (see QS-6.05C for procedure)	
Test Location:	Scrubber Stack	must be within ± 0.5g of certified mass	
Project #:	M193103		
Date:	11/15/2019	250 grams:	250.2
Test Method:	5/202		
		500 grams:	500.2
Weighed/Measured By:	TER		
Balance ID:	S10-82	750 grams:	750.2

IMPINGER CONTENTS	FINAL MLS / GRAMS	INITIAL MLS / GRAMS	GAIN MLS / GRAMS
Empty	419.3	418.4	0.9
Empty	604.5	573.3	31.2
DI Water	752.9	735.4	17.5
Silica Gel	275.5	251.4	24.1

1,776.7	1,727.1	49.6
Liquid Final	Liquid Initial	Liquid Gain
275.5	251.4	24.1
Silica Final	Silica Initial	Silica Gain

Run 2-Method 5/202

Client: General Iron Industries, Inc.
Facility: Chicago, IL
Test Location: Scrubber Stack
Source Condition: Normal

Date: 11/18/19
Start Time: 8:51
End Time: 10:12

DRY GAS METER CONDITIONS			STACK CONDITIONS		
ΔH:	1.15	In. H_2O	Static Pressure	0.30	in. H_2O
Meter Temperature, Tm:	55.0	°F	Flue Pressure (Ps):	29.18	in. Hg. abs.
Sqrt ΔP:	0.580	In. H_2O	Carbon Dioxide:	0.50	%
Stack Temperature, Ts:	100.6	°F	Oxygen:	20.20	%
Meter Volume, Vm:	34.903	ft^3	Nitrogen:	79.3	%
Meter Volume, Vmstd:	35.358	dscf	Gas Weight dry, Md:	28.888	lb/lb mole
Meter Volume, Vwstd:	2.732	wscf	Gas Weight wet, Ms:	28.159	lb/lb mole
Isokinetic Variance:	100.9	%I	Excess Air:	---	%
Heat Input, mmBtu/hr		Heat Input, mmBtu/hr	Gas Velocity, Vs:	34.414	fps
Test Length:	60.00	in mins.	Volumetric Flow:	61,678	acfm
Nozzle Diameter:	0.246	in inches	Volumetric Flow:	52,864	dscfm
Barometric Pressure:	29.16	in Hg	Volumetric Flow:	56,660	scfm
Filter ID:	14015		Calculated Fo:	1.40	
Filter Pre Weight (grams):	0.46113		Fo Validity:	#N/A	

MOISTURE DETERMINATION

Initial Impinger Content:	1703.0	ml	Silica Initial Wt.	841.4	grams
Final Impinger Content:	1725.9	ml	Silica Final Wt.	876.5	grams
Impinger Difference:	22.9	ml	Silica Difference:	35.1	grams

Total Water Gain: 58.0 Moisture, Bws: 0.072 **Supersaturation Value, Bws: 0.067**

Port-Point No.	Clock Time	Velocity Head Δp in. H2O	Orifice ΔH in. H2O	Actual Meter Vol. ft^3	Stack Temp °F	Meter Temp Inlet °F	Meter Temp Outlet °F	Probe Temp °F	Filter Exit Temp °F	Impinger Exit Temp °F
1-1	8:51:00	0.43	1.50	23.400	98	52	51	265	265	42
1-2	8:53:30	0.43	1.50	25.040	98	52	51	265	264	46
1-3	8:56:00	0.35	1.20	26.680	100	52	51	265	264	49
1-4	8:58:30	0.35	1.20	28.160	101	52	51	265	266	50
1-5	9:01:00	0.36	1.20	29.630	100	53	51	266	265	52
1-6	9:03:30	0.37	1.30	31.120	99	51	51	265	265	54
1-7	9:06:00	0.35	1.20	32.640	99	55	51	264	265	56
1-8	9:08:30	0.33	1.10	34.120	98	56	51	265	265	59
1-9	9:11:00	0.32	1.10	35.580	103	56	52	265	265	60
1-10	9:13:30	0.30	1.00	36.960	102	57	53	265	265	61
1-11	9:16:00	0.29	1.00	38.340	100	56	52	265	265	62
1-12	9:18:30	0.30	1.00	39.680	99	56	52	265	264	59
	9:21:00			41.050						
2-1	9:42:00	0.33	1.10	41.267	98	56	54	265	265	44
2-2	9:44:30	0.36	1.20	42.730	99	57	54	263	266	54
2-3	9:47:00	0.35	1.20	44.230	106	58	54	265	265	57
2-4	9:49:30	0.34	1.20	45.700	103	58	54	265	265	58
2-5	9:52:00	0.33	1.10	47.170	100	58	54	265	263	59
2-6	9:54:30	0.33	1.10	48.610	101	59	55	265	266	62
2-7	9:57:00	0.32	1.10	50.050	100	59	55	265	265	61
2-8	9:59:30	0.32	1.10	51.470	102	60	57	265	265	61
2-9	10:02:00	0.31	1.10	52.900	101	60	57	265	265	61
2-10	10:04:30	0.32	1.10	54.310	101	61	59	266	264	61
2-11	10:07:00	0.31	1.10	55.740	102	61	56	265	265	61
2-12	10:09:30	0.30	1.00	57.130	104	61	60	265	264	62
	10:12:00			58.520						
Total	1:00:00			34.903		56.5	53.6			
Average			1.15		100.6	55.0				
Min			1.00		98.0	51.0				
Max			1.50		106.0	61.0				

IMPINGER WEIGHT SHEET - RUN 2

Client:	General Iron Industries, Inc.	Scale Calibration Check Date:	11/18/2019
Facility:	Chicago, IL	Scale Calibration Check (see QS-6.05C for procedure)	
Test Location:	Scrubber Stack	must be within ± 0.5g of certified mass	
Project #:	M193103		
Date:	11/18/2019	250 grams:	250.1
Test Method:	5/202		
		500 grams:	500.1
Weighed/Measured By:	RICHS		
Balance ID:	S10-82	750 grams:	750.2

IMPINGER CONTENTS	FINAL MLS / GRAMS	INITIAL MLS / GRAMS	GAIN MLS / GRAMS
Empty	421.4	419.8	1.6
Empty	545.8	533.8	12.0
DI Water	758.7	749.4	9.3
Silica Gel	876.5	841.4	35.1

1,725.9	1,703.0	22.9
Liquid Final	Liquid Initial	Liquid Gain
876.5	841.4	35.1
Silica Final	Silica Initial	Silica Gain

Run 3-Method 5/202

Client: General Iron Industries, Inc.
Facility: Chicago, IL
Test Location: Scrubber Stack
Source Condition: Normal

Date: 11/18/19
Start Time: 11:22
End Time: 12:46

DRY GAS METER CONDITIONS			STACK CONDITIONS		
ΔH:	1.17	In. H_2O	Static Pressure	0.30	in. H_2O
Meter Temperature, Tm:	56.3	°F	Flue Pressure (Ps):	29.18	in. Hg. abs.
Sqrt ΔP:	0.585	In. H_2O	Carbon Dioxide:	0.30	%
Stack Temperature, Ts:	103.3	°F	Oxygen:	20.20	%
Meter Volume, Vm:	35.179	ft^3	Nitrogen:	79.5	%
Meter Volume, Vmstd:	35.553	dscf	Gas Weight dry, Md:	28.856	lb/lb mole
Meter Volume, Vwstd:	2.755	wscf	Gas Weight wet, Ms:	28.075	lb/lb mole
Isokinetic Variance:	101.3	%I	Excess Air:	---	%
Heat Input, mmBtu/hr		Heat Input, mmBtu/hr	Gas Velocity, Vs:	34.827	fps
Test Length:	60.00	in mins.	Volumetric Flow:	62,417	acfm
Nozzle Diameter:	0.246	in inches	Volumetric Flow:	52,959	dscfm
Barometric Pressure:	29.16	in Hg	Volumetric Flow:	57,063	scfm
Filter ID:	14338		Calculated Fo:	2.33	
Filter Pre Weight (grams):	0.46407		Fo Validity:	#N/A	

MOISTURE DETERMINATION

Initial Impinger Content:	1657.8	ml	Silica Initial Wt.	833.7	grams
Final Impinger Content:	1698.2	ml	Silica Final Wt.	851.8	grams
Impinger Difference:	40.4	ml	Silica Difference:	18.1	grams

Total Water Gain: 58.5 Moisture, Bws: 0.072 **Supersaturation Value, Bws: 0.073**

Port-Point No.	Clock Time	Velocity Head Δp in. H2O	Orifice ΔH in. H2O	Actual Meter Vol. ft^3	Stack Temp °F	Meter Temp Inlet °F	Meter Temp Outlet °F	Probe Temp °F	Filter Exit Temp °F	Impinger Exit Temp °F
1-1	11:22:00	0.38	1.30	59.190	102	54	53	265	265	41
1-2	11:24:30	0.37	1.30	60.730	100	53	53	265	265	45
1-3	11:27:00	0.37	1.30	62.260	105	54	53	265	262	49
1-4	11:29:30	0.36	1.20	63.790	102	55	53	265	266	54
1-5	11:32:00	0.35	1.20	65.260	100	55	53	266	264	56
1-6	11:34:30	0.36	1.20	66.740	106	56	53	265	265	59
1-7	11:37:00	0.36	1.20	68.250	101	57	54	265	264	61
1-8	11:39:30	0.36	1.20	69.740	106	57	54	265	265	60
1-9	11:42:00	0.35	1.20	71.250	103	58	54	265	264	62
1-10	11:44:30	0.35	1.20	72.730	103	59	54	266	265	64
1-11	11:47:00	0.35	1.20	74.220	106	61	55	265	265	65
1-12	11:49:30	0.34	1.20	75.670	102	61	55	265	265	66
	11:52:00			77.160						
2-1	12:16:00	0.37	1.30	77.316	99	57	56	265	264	41
2-2	12:18:30	0.35	1.20	78.850	103	58	56	264	265	42
2-3	12:21:00	0.34	1.20	80.350	102	58	56	265	266	43
2-4	12:23:30	0.34	1.20	81.810	102	57	56	265	266	44
2-5	12:26:00	0.33	1.10	83.260	101	57	56	266	266	47
2-6	12:28:30	0.33	1.10	84.710	109	57	56	265	264	48
2-7	12:31:00	0.33	1.10	86.160	104	58	56	265	264	49
2-8	12:33:30	0.32	1.10	87.580	102	58	57	265	265	50
2-9	12:36:00	0.32	1.10	89.010	103	59	57	265	265	51
2-10	12:38:30	0.30	1.00	90.440	103	60	57	265	266	50
2-11	12:41:00	0.30	1.00	91.800	110	61	57	265	265	52
2-12	12:43:30	0.29	1.00	93.180	105	61	57	265	265	51
	12:46:00			94.525						
Total	1:00:00			35.179		57.5	55.0			
Average			1.17		103.3	56.3				
Min			1.00		99.0	53.0				
Max			1.30		110.0	61.0				

IMPINGER WEIGHT SHEET - RUN 3

Client:	General Iron Industries, Inc.	Scale Calibration Check Date:	11/18/2019
Facility:	Chicago, IL	Scale Calibration Check (see QS-6.05C for procedure)	
Test Location:	Scrubber Stack	must be within ± 0.5g of certified mass	
Project #:	M193103		
Date:	11/18/2019	250 grams:	250.1
Test Method:	5/202		
		500 grams:	500.1
Weighed/Measured By:	SWB		
Balance ID:	S10-82	750 grams:	750.2

IMPINGER CONTENTS	FINAL MLS / GRAMS	INITIAL MLS / GRAMS	GAIN MLS / GRAMS
Empty	422.5	410.6	11.9
Empty	592.3	578.0	14.3
DI Water	683.4	669.2	14.2
Silica Gel	851.8	833.7	18.1

1,698.2	1,657.8	40.4
Liquid Final	Liquid Initial	Liquid Gain
851.8	833.7	18.1
Silica Final	Silica Initial	Silica Gain

Run 4-Method 5/202

Client: General Iron Industries, Inc.
Facility: Chicago, IL
Test Location: Scrubber Stack
Source Condition: Normal

Date: 11/18/19
Start Time: 16:40
End Time: 17:56

DRY GAS METER CONDITIONS			STACK CONDITIONS		
ΔH:	1.21	In. H_2O	Static Pressure	0.30	in. H_2O
Meter Temperature, Tm:	53.5	°F	Flue Pressure (Ps):	29.18	in. Hg. abs.
Sqrt ΔP:	0.597	In. H_2O	Carbon Dioxide:	0.40	%
Stack Temperature, Ts:	104.1	°F	Oxygen:	20.40	%
Meter Volume, Vm:	35.672	ft^3	Nitrogen:	79.2	%
Meter Volume, Vmstd:	36.253	dscf	Gas Weight dry, Md:	28.880	lb/lb mole
Meter Volume, Vwstd:	2.063	wscf	Gas Weight wet, Ms:	28.294	lb/lb mole
Isokinetic Variance:	99.8	%I	Excess Air:	---	%
Heat Input, mmBtu/hr		Heat Input, mmBtu/hr	Gas Velocity, Vs:	35.423	fps
Test Length:	60.00	in mins.	Volumetric Flow:	63,485	acfm
Nozzle Diameter:	0.246	in inches	Volumetric Flow:	54,837	dscfm
Barometric Pressure:	29.16	in Hg	Volumetric Flow:	57,958	scfm
Filter ID:	14016		Calculated Fo:	1.25	
Filter Pre Weight (grams):			Fo Validity:	#N/A	

MOISTURE DETERMINATION

Initial Impinger Content:	1701.8	ml	Silica Initial Wt.	876.5	grams
Final Impinger Content:	1730.4	ml	Silica Final Wt.	891.7	grams
Impinger Difference:	28.6	ml	Silica Difference:	15.2	grams

Total Water Gain: 43.8 Moisture, Bws: 0.054 **Supersaturation Value, Bws: 0.075**

Port-Point No.	Clock Time	Velocity Head Δp in. H2O	Orifice ΔH in. H2O	Actual Meter Vol. ft^3	Stack Temp °F	Meter Temp Inlet °F	Meter Temp Outlet °F	Probe Temp °F	Filter Exit Temp °F	Impinger Exit Temp °F
1-1	16:40:00	0.36	1.20	0.000	104	53	52	265	265	42
1-2	16:42:30	0.33	1.10	1.500	103	53	52	265	264	47
1-3	16:45:00	0.34	1.10	2.940	100	54	52	265	264	47
1-4	16:47:30	0.35	1.20	4.380	101	53	52	264	265	49
1-5	16:50:00	0.35	1.20	5.860	108	53	52	265	265	51
1-6	16:52:30	0.36	1.20	7.330	106	54	52	265	265	56
1-7	16:55:00	0.36	1.20	8.820	104	54	52	265	265	56
1-8	16:57:30	0.36	1.20	10.310	102	55	52	265	265	58
1-9	17:00:00	0.38	1.30	11.820	103	55	52	265	265	60
1-10	17:02:30	0.36	1.20	13.360	102	55	52	265	265	61
1-11	17:05:00	0.35	1.20	14.850	107	56	52	265	265	60
1-12	17:07:30	0.34	1.20	16.310	109	56	52	265	266	61
	17:10:00			17.750						
2-1	17:26:00	0.37	1.30	18.128	105	54	52	265	265	43
2-2	17:28:30	0.36	1.20	19.660	103	55	52	265	264	51
2-3	17:31:00	0.37	1.30	21.140	99	56	52	265	265	55
2-4	17:33:30	0.36	1.20	22.680	101	56	52	265	265	57
2-5	17:36:00	0.37	1.30	24.160	104	55	53	265	266	61
2-6	17:38:30	0.37	1.30	25.690	105	55	52	265	265	60
2-7	17:41:00	0.35	1.20	27.200	109	55	53	265	266	61
2-8	17:43:30	0.35	1.20	28.660	105	55	53	265	265	63
2-9	17:46:00	0.36	1.20	30.150	104	55	53	265	265	63
2-10	17:48:30	0.36	1.20	31.650	109	55	53	265	263	62
2-11	17:51:00	0.35	1.20	33.130	104	55	53	262	264	61
2-12	17:53:30	0.34	1.20	34.610	101	55	53	265	265	58
	17:56:00			36.050						
Total	1:00:00			35.672		54.7	52.3			
Average			1.21		104.1	53.5				
Min			1.10		99.0	52.0				
Max			1.30		109.0	56.0				

IMPINGER WEIGHT SHEET - RUN 4

Client:	General Iron Industries, Inc.	Scale Calibration Check Date:	11/18/2019
Facility:	Chicago, IL	Scale Calibration Check (see QS-6.05C for procedure)	
Test Location:	Scrubber Stack	must be within ± 0.5g of certified mass	
Project #:	M193103		
Date:	11/18/2019	250 grams:	250.1
Test Method:	5/202		
		500 grams:	500.1
Weighed/Measured By:	SWB		
Balance ID:	S10-82	750 grams:	750.2

IMPINGER CONTENTS	FINAL MLS / GRAMS	INITIAL MLS / GRAMS	GAIN MLS / GRAMS
Empty	412.6	407.2	5.4
Empty	543.1	536.0	7.1
DI Water	774.7	758.6	16.1
Silica Gel	891.7	876.5	15.2

1,730.4	1,701.8	28.6
Liquid Final	Liquid Initial	Liquid Gain
891.7	876.5	15.2
Silica Final	Silica Initial	Silica Gain

Client:	General Iron Industries, Inc.	
Facility:	Chicago, IL	
Test Location:	RTO Inlet	
Project #:	M193103	
Test Method:	2	
Test Engineer:	BVG	
Test Technician:	CMB/CMT	
Temp ID:	CM17	
Meter ID:	CM17	
Pitot ID:	148A	
Pitot Type:	S-Type	
Pitot Tube Coefficient:	0.840	
Probe Length:	6.0	**ft**
Sample Plane:	Horizontal	
Port Length:	6.00	**in.**
Port Size (diameter):	3.00	**in.**
Port Type:	Nipple	
Duct Shape:	Circular	
Diameter:	4.167	**ft**
Duct Area:	13.64	**Sq. Ft.**
Upstream Diameters:	8.150	
Downstream Diameters:	2.630	
Number of Ports Sampled:	2	
Number of Points per Port:	8	
Total Number of Traverse Points:	16	
Operating Level:	Normal	
Moisture Balance ID:	S10-82	

METHOD 2 VOLUMETRIC FLOW DATA

Project Number:	M193103	**Operating Level:**	Normal		
Client:	General Iron Industries, Inc.	**Run No.:**	Pre 1		
Facility:	Chicago, IL	**Test Date:**	11/15/2019		
Test Location:	RTO Inlet	**Start Time:**	10:35		
Pitot ID:	148A	**End Time:**	10:45		
Pitot Coefficient:	0.840	**Test Engineer:**	BVG	**Test Tech:**	CMB/CMT
Probe Length, Feet:	6	**Port Length, Inches:**	6		

Port	Point	DP (in. H_2O)	Sqrt. DP	Temp (°F)	Velocity (V)	Port	Point	DP (in. H_2O)	Sqrt. DP	Temp (°F)	Velocity (V)
A	**1**	1.90	1.3784	76.0	77.05	**B**	**1**	2.10	1.4491	77.0	81.08
A	**2**	1.80	1.3416	76.0	74.99	**B**	**2**	2.20	1.4832	78.0	83.06
A	**3**	2.00	1.4142	74.0	78.90	**B**	**3**	2.20	1.4832	78.0	83.06
A	**4**	2.00	1.4142	75.0	78.98	**B**	**4**	2.20	1.4832	78.0	83.06
A	**5**	2.20	1.4832	76.0	82.91	**B**	**5**	1.90	1.3784	81.0	77.41
A	**6**	2.20	1.4832	76.0	82.91	**B**	**6**	1.90	1.3784	77.0	77.12
A	**7**	2.30	1.5166	76.0	84.77	**B**	**7**	1.80	1.3416	77.0	75.06
A	**8**	2.50	1.5811	75.0	88.30	**B**	**8**	1.80	1.3416	78.0	75.13

Test Parameters

P_{bar} - Barometric pressure, inches Hg	29.70	% CO_2	0.00
P_g - Stack Pressure, inches of H_2O	16.00	% O_2	20.90
P_s - Absolute stack pressure, inches Hg	30.88	% N_2	79.10
t_s - Average stack temperature, °F	76.8	Md - dry basis lb/lb mole	28.84
Duct Shape:	Circular	Ms - wet basis lb/lb mole	28.652
Diameter, Feet	4.167		
		Bws - Moisture content fraction	**0.017**
Cross Sectional Area of Stack, Ft^2	13.64	Moisture determined by wb/db?	N
		Supersaturation Value, Bws:	**0.030**

Method 2 Results

Average DP	2.0625	Q - ACFM	65,667
Average Sqrt DP	1.4345	Qsd - DSCFM	65,529
Average Velocity Vs (ft/sec)	80.239	Qs - SCFM	66,662
		Qs - SCFH	3,999,715

METHOD 2 VOLUMETRIC FLOW DATA

Project Number:	M193103	**Operating Level:**	Normal		
Client:	General Iron Industries, Inc.	**Run No.:**	Post 1		
Facility:	Chicago, IL	**Test Date:**	11/15/2019		
Test Location:	RTO Inlet	**Start Time:**	13:15		
Pitot ID:	148A	**End Time:**	13:20		
Pitot Coefficient:	0.840	**Test Engineer:**	BVG	**Test Tech:**	CMB/CMT
Probe Length, Feet:	6	**Port Length, Inches:**	6		

Port	Point	DP (in. H_2O)	Sqrt. DP	Temp (°F)	Velocity (V)	Port	Point	DP (in. H_2O)	Sqrt. DP	Temp (°F)	Velocity (V)
A	**1**	1.90	1.3784	77.0	77.12	**B**	**1**	1.70	1.3038	81.0	73.22
A	**2**	1.80	1.3416	80.0	75.27	**B**	**2**	2.00	1.4142	81.0	79.42
A	**3**	1.80	1.3416	82.0	75.41	**B**	**3**	1.80	1.3416	82.0	75.41
A	**4**	1.80	1.3416	83.0	75.48	**B**	**4**	1.90	1.3784	82.0	77.48
A	**5**	2.00	1.4142	82.0	79.49	**B**	**5**	1.90	1.3784	82.0	77.48
A	**6**	2.00	1.4142	82.0	79.49	**B**	**6**	2.00	1.4142	82.0	79.49
A	**7**	2.30	1.5166	82.0	85.24	**B**	**7**	2.50	1.5811	82.0	88.87
A	**8**	2.30	1.5166	82.0	85.24	**B**	**8**	3.00	1.7321	82.0	97.36

Test Parameters

P_{bar} - Barometric pressure, inches Hg	29.70	% CO_2	0.00
P_g - Stack Pressure, inches of H_2O	16.00	% O_2	20.90
P_s - Absolute stack pressure, inches Hg	30.88	% N_2	79.10
t_s - Average stack temperature, °F	81.5	Md - dry basis lb/lb mole	28.84
Duct Shape:	Circular	Ms - wet basis lb/lb mole	28.652
Diameter, Feet	4.167		
		Bws - Moisture content fraction	**0.017**
Cross Sectional Area of Stack, Ft^2	13.64	Moisture determined by wb/db?	N
		Supersaturation Value, Bws:	**0.035**

Method 2 Results

Average DP	2.0438	Q - ACFM	65,547
Average Sqrt DP	1.4256	Qsd - DSCFM	64,835
Average Velocity Vs (ft/sec)	80.092	Qs - SCFM	65,956
		Qs - SCFH	3,957,357

METHOD 2 VOLUMETRIC FLOW DATA

Project Number:	M193103	**Operating Level:**	Normal		
Client:	General Iron Industries, Inc.	**Run No.:**	Pre 2		
Facility:	Chicago, IL	**Test Date:**	11/18/2019		
Test Location:	RTO Inlet	**Start Time:**	8:53		
Pitot ID:	148A	**End Time:**	9:00		
Pitot Coefficient:	0.840	**Test Engineer:**	BVG	**Test Tech:**	CMB/CMT
Probe Length, Feet:	6	**Port Length, Inches:**	6		

Port	Point	DP (in. H_2O)	Sqrt. DP	Temp (°F)	Velocity (V)	Port	Point	DP (in. H_2O)	Sqrt. DP	Temp (°F)	Velocity (V)
A	**1**	1.20	1.0954	87.0	62.38	**B**	**1**	1.40	1.1832	88.0	67.44
A	**2**	1.30	1.1402	88.0	64.98	**B**	**2**	1.30	1.1402	88.0	64.98
A	**3**	1.50	1.2247	88.0	69.80	**B**	**3**	1.30	1.1402	87.0	64.92
A	**4**	1.50	1.2247	88.0	69.80	**B**	**4**	1.40	1.1832	87.0	67.37
A	**5**	1.50	1.2247	88.0	69.80	**B**	**5**	1.30	1.1402	87.0	64.92
A	**6**	1.60	1.2649	87.0	72.03	**B**	**6**	1.30	1.1402	87.0	64.92
A	**7**	1.80	1.3416	87.0	76.39	**B**	**7**	1.60	1.2649	87.0	72.03
A	**8**	2.40	1.5492	87.0	88.21	**B**	**8**	2.10	1.4491	87.0	82.52

Test Parameters

P_{bar} - Barometric pressure, inches Hg	29.20	% CO_2	0.00
P_g - Stack Pressure, inches of H_2O	16.00	% O_2	20.90
P_s - Absolute stack pressure, inches Hg	30.38	% N_2	79.10
t_s - Average stack temperature, °F	87.4	Md - dry basis lb/lb mole	28.84
Duct Shape:	Circular	Ms - wet basis lb/lb mole	28.641
Diameter, Feet	4.167		
		Bws - Moisture content fraction	**0.018**
Cross Sectional Area of Stack, Ft^2	13.64	Moisture determined by wb/db?	N
		Supersaturation Value, Bws:	**0.043**

Method 2 Results

Average DP	1.5313	Q - ACFM	57,416
Average Sqrt DP	1.2317	Qsd - DSCFM	55,217
Average Velocity Vs (ft/sec)	70.157	Qs - SCFM	56,229
		Qs - SCFH	3,373,743

METHOD 2 VOLUMETRIC FLOW DATA

Project Number:	M193103	**Operating Level:**	Normal		
Client:	General Iron Industries, Inc.	**Run No.:**	Post 2/Pre 3		
Facility:	Chicago, IL	**Test Date:**	11/18/2019		
Test Location:	RTO Inlet	**Start Time:**	11:26		
Pitot ID:	148A	**End Time:**	11:34		
Pitot Coefficient:	0.840	**Test Engineer:**	BVG	**Test Tech:**	CMB/CMT
Probe Length, Feet:	6	**Port Length, Inches:**	6		

Port	Point	DP (in. H_2O)	Sqrt. DP	Temp (^oF)	Velocity (V)	Port	Point	DP (in. H_2O)	Sqrt. DP	Temp (^oF)	Velocity (V)
A	1	1.30	1.1402	85.0	64.79	B	1	1.20	1.0954	87.0	62.36
A	2	1.40	1.1832	87.0	67.36	B	2	1.30	1.1402	87.0	64.91
A	3	1.40	1.1832	86.0	67.30	B	3	1.30	1.1402	87.0	64.91
A	4	1.30	1.1402	86.0	64.85	B	4	1.40	1.1832	87.0	67.36
A	5	1.50	1.2247	86.0	69.66	B	5	1.50	1.2247	88.0	69.79
A	6	1.70	1.3038	87.0	74.23	B	6	1.60	1.2649	86.0	71.95
A	7	1.90	1.3784	87.0	78.47	B	7	1.70	1.3038	86.0	74.16
A	8	2.10	1.4491	87.0	82.50	B	8	2.00	1.4142	86.0	80.44

Test Parameters

P_{bar} - Barometric pressure, inches Hg	29.20	% CO_2	0.00
P_g - Stack Pressure, inches of H_2O	16.00	% O_2	20.90
P_s - Absolute stack pressure, inches Hg	30.38	% N_2	79.10
t_s - Average stack temperature, ^oF	86.6	Md - dry basis lb/lb mole	28.84
Duct Shape:	Circular	Ms - wet basis lb/lb mole	28.652
Diameter, Feet	4.167		
		Bws - Moisture content fraction	**0.017**
Cross Sectional Area of Stack, Ft^2	13.64	Moisture determined by wb/db?	N
		Supersaturation Value, Bws:	**0.042**

Method 2 Results

Average DP	1.5375	Q - ACFM	57,546
Average Sqrt DP	1.2356	Qsd - DSCFM	55,480
Average Velocity Vs (ft/sec)	70.315	Qs - SCFM	56,440
		Qs - SCFH	3,386,377

METHOD 2 VOLUMETRIC FLOW DATA

Project Number:	M193103	**Operating Level:**	Normal		
Client:	General Iron Industries, Inc.	**Run No.:**	Post 3/Pre 4		
Facility:	Chicago, IL	**Test Date:**	11/18/2019		
Test Location:	RTO Inlet	**Start Time:**	16:45		
Pitot ID:	148A	**End Time:**	16:55		
Pitot Coefficient:	0.840	**Test Engineer:**	BVG	**Test Tech:**	CMB/CMT
Probe Length, Feet:	6	**Port Length, Inches:**	6		

Port	Point	DP (in. H_2O)	Sqrt. DP	Temp (^oF)	Velocity (V)	Port	Point	DP (in. H_2O)	Sqrt. DP	Temp (^oF)	Velocity (V)
A	1	1.30	1.1402	88.0	64.97	B	1	1.20	1.0954	86.0	62.31
A	2	1.40	1.1832	88.0	67.42	B	2	1.30	1.1402	87.0	64.91
A	3	1.40	1.1832	87.0	67.36	B	3	1.30	1.1402	87.0	64.91
A	4	1.30	1.1402	87.0	64.91	B	4	1.40	1.1832	88.0	67.42
A	5	1.50	1.2247	87.0	69.73	B	5	1.50	1.2247	87.0	69.73
A	6	1.70	1.3038	87.0	74.23	B	6	1.60	1.2649	87.0	72.01
A	7	1.90	1.3784	87.0	78.47	B	7	1.70	1.3038	88.0	74.30
A	8	2.10	1.4491	87.0	82.50	B	8	2.00	1.4142	88.0	80.59

Test Parameters

P_{bar} - Barometric pressure, inches Hg	29.20	% CO_2	0.00
P_g - Stack Pressure, inches of H_2O	16.00	% O_2	20.90
P_s - Absolute stack pressure, inches Hg	30.38	% N_2	79.10
t_s - Average stack temperature, ^oF	87.3	Md - dry basis lb/lb mole	28.84
Duct Shape:	Circular	Ms - wet basis lb/lb mole	28.652
Diameter, Feet	4.167		
		Bws - Moisture content fraction	**0.017**
Cross Sectional Area of Stack, Ft^2	13.64	Moisture determined by wb/db?	N
		Supersaturation Value, Bws:	**0.043**

Method 2 Results

Average DP	1.5375	Q - ACFM	57,582
Average Sqrt DP	1.2356	Qsd - DSCFM	55,445
Average Velocity Vs (ft/sec)	70.359	Qs - SCFM	56,404
		Qs - SCFH	3,384,249

METHOD 2 VOLUMETRIC FLOW DATA

Project Number:	M193103	**Operating Level:**	Normal		
Client:	General Iron Industries, Inc.	**Run No.:**	Post 4		
Facility:	Chicago, IL	**Test Date:**	11/18/2019		
Test Location:	RTO Inlet	**Start Time:**	17:40		
Pitot ID:	148A	**End Time:**	17:48		
Pitot Coefficient:	0.840	**Test Engineer:**	BVG	**Test Tech:**	CMB/CMT
Probe Length, Feet:	6	**Port Length, Inches:**	6		

Port	Point	DP (in. H_2O)	Sqrt. DP	Temp (°F)	Velocity (V)	Port	Point	DP (in. H_2O)	Sqrt. DP	Temp (°F)	Velocity (V)
A	**1**	1.20	1.0954	88.0	62.42	**B**	**1**	1.30	1.1402	86.0	64.85
A	**2**	1.30	1.1402	87.0	64.91	**B**	**2**	1.40	1.1832	86.0	67.30
A	**3**	1.50	1.2247	87.0	69.73	**B**	**3**	1.40	1.1832	87.0	67.36
A	**4**	1.40	1.1832	86.0	67.30	**B**	**4**	1.60	1.2649	88.0	72.08
A	**5**	1.60	1.2649	86.0	71.95	**B**	**5**	1.60	1.2649	88.0	72.08
A	**6**	1.80	1.3416	86.0	76.31	**B**	**6**	1.70	1.3038	88.0	74.30
A	**7**	1.70	1.3038	87.0	74.23	**B**	**7**	1.70	1.3038	87.0	74.23
A	**8**	1.90	1.3784	87.0	78.47	**B**	**8**	1.90	1.3784	87.0	78.47

Test Parameters

P_{bar} - Barometric pressure, inches Hg	29.20	% CO_2	0.00
P_g - Stack Pressure, inches of H_2O	16.00	% O_2	20.90
P_s - Absolute stack pressure, inches Hg	30.38	% N_2	79.10
t_s - Average stack temperature, °F	86.9	Md - dry basis lb/lb mole	28.84
Duct Shape:	Circular	Ms - wet basis lb/lb mole	28.652
Diameter, Feet	4.167		
		Bws - Moisture content fraction	**0.017**
Cross Sectional Area of Stack, Ft^2	13.64	Moisture determined by wb/db?	N
		Supersaturation Value, Bws:	**0.042**

Method 2 Results

Average DP	1.5625	Q - ACFM	58,105
Average Sqrt DP	1.2472	Qsd - DSCFM	55,981
Average Velocity Vs (ft/sec)	70.998	Qs - SCFM	56,949
		Qs - SCFH	3,416,939

General Iron Industries, Inc.
Chicago, IL
RTO Inlet
Volumetric Flow Data - Normal Load

Test Run	Test Date	Pre Flow SCFM	Post Flow SCFM	Average Reference Method Flow SCFM
Pre 1/Post 1	11/15/19	66,662	65,956	66,309
Pre 2/Post 2	11/18/19	56,229	56,440	56,334
Pre 3/Post 3	11/18/19	56,440	56,404	56,422
Pre 4/Post 4	11/18/19	56,404	56,949	56,677

METHOD 4 MOISTURE DETERMINATION

Project Number:	M193103	**Run Number:**	**1**		
Client:	General Iron Industries, Inc.	**Operating Level:**	Normal		
Facility:	Chicago, IL	**Time:**	**Start-** 10:33	**End-** 12:46	
Test Location:	RTO Inlet	**Test Engineer:**	BVG		
Test Date:	11/15/2019	**Test Tech:**	CMB/CMT		
Pressure, Barometric(Hg"):	29.70	**Meter Calibration (Y):**	0.994		
Delta H:	1.800	**Meter Delta H (dH):**	1.842		
Meter Initial Volume:	11.690	**Initial Wt:**	241.4		
Meter Final Volume:	56.720	**Final Wt:**	243.7		
Meter Temperature:	37.91	**Initial Volume:**	200.0		
Meter Volume dscf:	47.326	**Final Volume:**	215.0		
		Water Vapor in Flue Gas (Bws):	**0.017**		

Project Number:	M193103	**Run Number:**	**2**		
Client:	General Iron Industries, Inc.	**Operating Level:**	Normal		
Facility:	Chicago, IL	**Time:**	**Start-** 8:51	**End-** 10:12	
Test Location:	RTO Inlet	**Test Engineer:**	BVG		
Test Date:	11/15/2019	**Test Tech:**	CMB/CMT		
Pressure, Barometric(Hg"):	29.20	**Meter Calibration (Y):**	0.994		
Delta H:	1.842	**Meter Delta H (dH):**	1.842		
Meter Initial Volume:	58.470	**Initial Wt:**	252.0		
Meter Final Volume:	103.680	**Final Wt:**	255.3		
Meter Temperature:	43.41	**Initial Volume:**	200.0		
Meter Volume dscf:	46.213	**Final Volume:**	215.0		
		Water Vapor in Flue Gas (Bws):	**0.018**		

Project Number:	M193103	**Run Number:**	**3**		
Client:	General Iron Industries, Inc.	**Operating Level:**	Normal		
Facility:	Chicago, IL	**Time:**	**Start-** 11:22	**End-** 12:46	
Test Location:	RTO Inlet	**Test Engineer:**	BVG		
Test Date:	11/15/2019	**Test Tech:**	CMB/CMT		
Pressure, Barometric(Hg"):	29.20	**Meter Calibration (Y):**	0.994		
Delta H:	1.842	**Meter Delta H (dH):**	1.842		
Meter Initial Volume:	3.790	**Initial Wt:**	250.8		
Meter Final Volume:	48.810	**Final Wt:**	252.7		
Meter Temperature:	43.95	**Initial Volume:**	215.0		
Meter Volume dscf:	45.969	**Final Volume:**	230.0		
		Water Vapor in Flue Gas (Bws):	**0.017**		

Project Number:	M193103	**Run Number:**	**4**		
Client:	General Iron Industries, Inc.	**Operating Level:**	Normal		
Facility:	Chicago, IL	**Time:**	**Start-** 16:40	**End-** 17:56	
Test Location:	RTO Inlet	**Test Engineer:**	BVG		
Test Date:	11/15/2019	**Test Tech:**	CMB/CMT		
Pressure, Barometric(Hg"):	29.20	**Meter Calibration (Y):**	0.994		
Delta H:	1.842	**Meter Delta H (dH):**	1.842		
Meter Initial Volume:	49.425	**Initial Wt:**	252.7		
Meter Final Volume:	94.455	**Final Wt:**	254.7		
Meter Temperature:	42.00	**Initial Volume:**	230.0		
Meter Volume dscf:	46.158	**Final Volume:**	245.0		
		Water Vapor in Flue Gas (Bws):	**0.017**		

Appendix G - Field Data Sheets

Isokinetic Sampling Cover Sheet

Test Engineer: JRK
Test Technician: RMG / KNS

Plant Information

Run Number: _____
Test Location: Scrubber Stack
Duct Shape: (Circular) or Rectangular
Flue Area: 28.870
Port Type: nipple
Test Method: 5/202

Date: 11/15/19
Client Name: General Iron Industries, LLC
Length: _____ Width: _____ or Diameter: 6.167
Upstream Diameters: 1.4
Port Length: 6
Source Condition: normal

Project Number: M193103
Plant Name: Chicago, IL
Downstream Diameters: 2.0
Port Diameter: 3

Meter and Probe Data

Meter ID: CM2
Pitot ID: 509A
Nozzle Kit ID: Teflon Kit #6
Probe Length: 7
Pre-Test Nozzle Leak Check: 0 @ 12 "Hg
Pre-Test Pitot Leak Check: 0 @ 5 "H_2O

Meter Y Value: 1.011
Pitot Coefficient: .84
Nozzle Diameter: .246
Probe Liner: Glass

ΔH Value: 1.883
Train Type: Anderson Box
Filter Number/Weight: # 18068 / 45702
Thimble Number/Weight: _____
Post-Test Nozzle Leak Check: 0 @ 10 "Hg
Post-Test Pitot Leak Check: 0 @ 5 "H_2O

Traverse Data

Ports Sampled: 2
Total Points: 24

Points/Port: 12
Total Test Time: 60

Min/Point: 2.5
Sample Plane: Horizontal or Vertical

Stack Parameters

Barometric Pressure: 29.67
CO_2 %: ___ / ___ / ___ / Avg. 0.4
Imp and/or silica balance Model and S/N: S10-82
Initial Imp. Volume or Weight: 1727.1
Initial Silica Weight: 251.4

Static Pressure: 0.3
O_2 %: ___ / ___ / ___ / Avg. 20.0
Servomex Serial #: Elom 4L 02 DX
Final Imp. Volume or Weight: 1776.7
Final Silica Weight: 275.5

Determined by: Method 3 or Method 3A
Imp. Volume or Weight Gain: 49.6
Silica Weight Gain: 24.1

Comments:

Leaking stop

Isokinetic Sampling Field Data Sheet-M202

Project Number:	M193103	Date:	11/15/19	Test Number:	1
Client:	General Iron Industries, Inc	Test Location:	Scrubber Stack	Operator:	JRK
Plant:	Chicago, IL	Test Method:	5 /202	Page Number:	1 of 7

Test Tech: ~~RMS~~ RNS

Port-Point #.	Time	(ΔP)	Orifice Setting (ΔH)	Meter Volume (V_m) ft^3, Actual	Square Root, ΔP	Meter Rate, Cubic Feet/ Min.	Theoretical Meter Volume, (V_m) ft^3, per point	Theoretical Meter Volume, (V_m) ft^3, total	Stack Temp, °F	Meter Temp Inlet, °F	Meter Temp Outlet, °F	Pump Vacuum, " Hg	Probe Temp. °F (248 ±25)	Filter Temp. °F	Impinger Outlet Well Temp °F (max 68)	CPM Filter Temp. °F (69-85)
1-1	1033	.36	1.1	80.845				—	98	39	40	3	265	255	36	69
1-2	103530	.35	1.1	82.251					99	39	39	4	265	261	38	69
1-3	1038	.40	1.3	83.64					98	39	40	4	265	263	40	77
1-4	104030	.43	1.4	85.12					98	40	40	4	265	265	42	80
1-5	1043	.45	1.4	86.66					97	40	39	5	265	265	44	83
1-6	104530	.40	1.3	88.22					103	41	40	4	265	266	47	84
1-7	1048	.41	1.3	89.69					100	42	40	4	265	266	48	85
1-8	105030	.46	1.5	91.20					99	42	40	5	265	264	51	85
1-9	1053	.51	1.6	92.79					99	44	41	4	265	265	53	84
1-10	105530	.51	1.6	94.47					100	44	41	4	265	266	55	84
1-11	1058	.53	1.7	96.15					100	45	41	4	265	265	57	81
1-12	110030	.51	1.6	97.86					102	45	42	4	265	265	58	79
	1103			99.53												
2-1	1107	.55	1.7	99.53				—	106	43	43	4	265	263	38	67
2-2	111130	.57	1.8	101.27					99	43	43	5	265	264	40	66
2-3	1122	.56	1.7	103.05					99	43	43	5	265	264	41	70
2-4	112430	.56	1.8	104.81					100	43	42	5	265	265	42	70
	1135			105.050												
2-4	1137	.49	1.5	105.050					101	43	42	5	265	265	37	69
2-5	1139	.54	1.7	106.69					96	45	44	5	265	265	40	69
	1200			109.200												
2-5	1230	.45	1.4	109.2					108	46	46	4	265	264	39	69
2-6	123230	.45	1.4	110.790					105	46	46	5	265	264	40	70
2-7	1240	.44	1.4	112.37					110	47	46	5	265	266	45	71
2-8	124230	.43	1.4	113.92					109	47	46	4	265	266	46	69
2-9	1245	.41	1.3	115.48					102	47	46	5	265	266	49	73
2-10	124730	.38	1.2	116.99					107	47	46	5	265	264	54	76

Isokinetic Sampling Field Data Sheet-M202

Project Number: M193103 Date: 11/15/19 Test Number: 1

Client: General Iron Industries, Inc Test Location: Scrubber Stack Operator: JRK Test Tech: ~~RKS~~/RNS

Plant: Chicago, IL Test Method: 5 /202 Page Number: 2 of 2

Port-Point #.	Time	(ΔP)	Orifice Setting (ΔH)	Meter Volume (V_m) ft^3, Actual	Square Root, ΔP	Meter Rate, Cubic Feet/ Min.	Theoretical Meter Volume, (V_m) ft^3, per point	Theoretical Meter Volume, (V_m) ft^3, total	Stack Temp, °F	Meter Temp Inlet, °F	Meter Temp Outlet, °F	Pump Vacuum, " Hg	Probe Temp. °F (148 ±25)	Filter Temp. °F	Impinger Outlet Well Temp °F (max 68)	CPM Filter Temp. °F (69-85)
2-11	1250	.39	1.2	118.45				—	104	48	47	4	265	263	34	79
	1252			119.03												
2-11	1315	.40	1.3	119.93					98	48	47	5	264	264	38	70
2-12	1315 30	.42	1.3	121.450					99	48	47	5	264	265	37	72
	1318			122.975												

IMPINGER WEIGHT SHEET

PLANT: General Iron

UNIT NO: Scrubber

LOCATION: Stack

DATE: 11/15/14

TEST NO: ~~2~~ 1 (Ten)

METHOD: 202

WEIGHED/MEASURED BY: TBR

Scale ID Number S10-82

Scale Calibration Check Date: 11/15/19

Scale Calibration Check (see QS-6.05C for procedure)
must be within ± 0.5g of certified mass

250 grams 250.2 250.1 11/10/19

500 grams 500.2 500.1 (TBR)

750 grams 750.2 750.2

Circle One:	FINAL WEIGHT MLS / GRAMS	INITIAL WEIGHT MLS / GRAMS	IMPINGER GAIN	IMPINGER CONTENTS
IMPINGER 1	419.3	418.4	0.9	Empty
IMPINGER 2	604.5	573.3	31.2	Empty
IMPINGER 3	752.9	735.4	17.5	DI
IMPINGER 4	275.5	251.4	24.1	Silica
IMPINGER 5				
IMPINGER 6				
IMPINGER 7				
IMPINGER 8				

	FINAL TOTAL	INITIAL TOTAL	TOTAL IMPINGER GAIN
IMPINGERS	1,776.7	1,727.1	49.6
SILICA	275.5	251.4	24.1

Isokinetic Sampling Cover Sheet

Test Engineer: JRK
Test Technician: KDB / MRZ

Plant Information

Run Number: 2
Date: 11/18/19
Project Number: M193103
Test Location: Scrubber Stack
Client Name: General Iron Industries, Inc.
Plant Name: Chicago, IL
Duct Shape: **Circular** or Rectangular
Length: ____ Width: ____ or Diameter: 6.167
Flue Area: 29.870
Upstream Diameters: 1.4
Downstream Diameters: 2.0
Port Type: Nipple
Port Length: 6
Port Diameter: 3
Test Method: 5/202
Source Condition: Normal

Meter and Probe Data

Meter ID: CM2
Meter Y Value: 1.011
ΔH Value: 1.883
Pitot ID: 509A
Pitot Coefficient: .84
Train Type: Anderson Box
Nozzle Kit ID: teflon Kit 6
Nozzle Diameter: .256
Filter Number/Weight: # 14015 / .4613
Probe Length: 7ft
Probe Liner: Glass
Thimble Number/Weight: n/a
Pre-Test Nozzle Leak Check: 0 @ 12 "Hg
Post-Test Nozzle Leak Check: 0 @ 8 "Hg
Pre-Test Pitot Leak Check: 0 @ 5 "H_2O
Post-Test Pitot Leak Check: 0 @ 5 "H_2O

Traverse Data

Ports Sampled: 2
Points/Port: 12
Min/Point: 2.5
Total Points: 24
Total Test Time: 60
Sample Plane: **Horizontal** or Vertical

Stack Parameters

Barometric Pressure: 29.16
Static Pressure: + 0.3
CO_2 %: ___ / ___ / ___ / Avg. .5
O_2 %: ___ / ___ / ___ /Avg. 20.3
Determined by: Method 3 or **Method 3A**
Imp and/or silica balance Model and S/N: S10-82
Servomex Serial #: Elem 426
Initial Imp. Volume or Weight: 1703
Final Imp. Volume or Weight: 1725.9
Imp. Volume or Weight Gain: 22.9
Initial Silica Weight: 841.4
Final Silica Weight: 876.5
Silica Weight Gain: 35.1

Comments:

Isokinetic Sampling Field Data Sheet-M202

Project Number:	M193103	Date:	11 / 18 / 19	Test Number:	2
Client:	General Iron Industries, Inc.	Test Location:	Scrubber Stack	Operator:	JRK Test Tech: KB/MAKI
Plant:	Chicago, IL	Test Method:	5/202	Page Number:	1 of 1

Port-Point #.	Time	(ΔP)	Orifice Setting (ΔH)	Meter Volume (V_m) ft^3, Actual	Square Root, ΔP	Meter Rate, Cubic Feet/ Min.	Theoretical Meter Volume, (V_m) ft^3, per point	Theoretical Meter Volume, (V_m) ft^3, total	Stack Temp, °F	Meter Temp Inlet, °F	Meter Temp Outlet, °F	Pump Vacuum, " Hg	Probe Temp. °F	Filter Temp. °F	Impinger Outlet Well Temp °F	CPM Filter Temp. °F
1-1	851	.33	1.5	23.400				----------	98	52	51	3	265	265	42	70
1-2	853 30	.42	1.5	25.07				25.036	98	52	51	3	265	264	46	71
1-3	856	.35	1.2	26.68				26.671	102	52	51	3	265	264	49	72
1-4	858 30	.35	1.2	28.16				28.144	101	52	51	3	265	266	50	75
1-5	901	.36	1.2	29.63				29.616	100	53	51	3	266	265	52	77
1-6	903 30	.37	1.3	31.12				31.111	99	51	51	4	265	265	54	78
1-7	906	.35	1.2	32.64				32.630	99	55	51	3	264	265	56	77
1-8	908 30	.37	1.1	34.12				34.109	98	56	51	3	265	265	59	79
1-9	911	.32	1.1	35.58				35.547	103	56	52	3	265	265	60	78
1-10	913 30	.3	1.0	36.96				36.959	102	57	53	3	265	265	61	78
1-11	916	.29	1.0	38.34				38.329	100	56	52	3	265	265	62	77
1-12	918 30	.3	1.0	39.68				39.626	99	56	52	3	265	264	59	76
	921			41.050				41.048								
2-1	942	.33	1.1	41.267				—	98	56	54	3	265	265	44	70
2-2	944 30	.36	1.2	42.73				42.700	99	57	54	4	263	266	54	71
2-3	947	.35	1.2	44.23				44.217	106	58	54	4	265	265	57	70
2-4	949 30	.34	1.2	45.70				45.695	103	58	54	4	265	265	58	70
2-5	952	.33	1.1	47.17				47.155	100	58	54	4	265	267	59	71
2-6	954 30	.33	1.1	48.61				48.598	101	59	55	4	265	266	62	72
2-7	957	.32	1.1	50.05				50.042	100	59	55	4	265	265	61	72
2-8	959 30	.32	1.1	51.77				51.466	102	60	57	4	265	265	61	71
2-9	1002	.31	1.1	52.90				52.891	101	60	57	4	265	265	61	73
2-10	1004 30	.32	1.1	54.38				54.295	101	61	59	4	266	264	61	74
2-11	1007	.31	1.1	55.74				55.726	102	61	56	4	265	265	61	75
2-12	1009 30	.30	1.0	57.13				57.128	104	61	60	4	265	264	62	76
	1012			58.520				58.511								

1047 st purge

IMPINGER WEIGHT SHEET

PLANT: General Iron

UNIT NO: Scrubber

LOCATION: Stack

DATE: 11/18/19

TEST NO: 2

METHOD: 5/202

WEIGHED/MEASURED BY: Richts

Scale ID Number S10-82

Scale Calibration Check Date: 11/18/19

Scale Calibration Check (see QS-6.05C for procedure)
must be within ± 0.5g of certified mass

250 grams 250.1

500 grams 500.2

750 grams 750.2

Circle One:	FINAL WEIGHT MLS / GRAMS	INITIAL WEIGHT MLS / GRAMS	IMPINGER GAIN	IMPINGER CONTENTS
IMPINGER 1	421.4	419.8		MT
IMPINGER 2	545.8	533.8		MT
IMPINGER 3	758.7	749.4		DI
IMPINGER 4	876.5	841.4		Silica
IMPINGER 5				
IMPINGER 6				
IMPINGER 7				
IMPINGER 8				

IMPINGERS _____ FINAL TOTAL _____ INITIAL TOTAL _____ TOTAL IMPINGER GAIN

SILICA _____ FINAL TOTAL _____ INITIAL TOTAL _____ TOTAL SILICA GAIN

Isokinetic Sampling Cover Sheet

Test Engineer: JRK
Test Technician: Kyol MAK I

Plant Information

Run Number: 3 | Date: 11/18/19 | Project Number: M193103
Test Location: Scrubber Stack | Client Name: General Iron Industries, Inc. | Plant Name: Chicago, IL
Duct Shape: **Circular** or Rectangular | Length: ____ Width: ____ or Diameter: 6.167
Flue Area: 29.870 | Upstream Diameters: 1.4 | Downstream Diameters: 2.0
Port Type: Nipple | Port Length: 6 | Port Diameter: 3
Test Method: 5/202 | Source Condition: Normal

Meter and Probe Data

Meter ID: CM2 | Meter Y Value: 1.011 | ΔH Value: 1.883
Pitot ID: 509A | Pitot Coefficient: .84 | Train Type: Anderson Box
Nozzle Kit ID: teflon kit 6 | Nozzle Diameter: .246 | Filter Number/Weight: # 493381 .46407
Probe Length: 7ft | Probe Liner: Glass | Thimble Number/Weight: n/a
Pre-Test Nozzle Leak Check: 0 @ 10 "Hg | Post-Test Nozzle Leak Check: 0 @ 10 "Hg
Pre-Test Pitot Leak Check: 0 @ 5 "H_2O | Post-Test Pitot Leak Check: 0 @ 5 "H_2O

Traverse Data

Ports Sampled: 2 | Points/Port: 12 | Min/Point: 2.5
Total Points: 24 | Total Test Time: 60 | Sample Plane: **Horizontal** or Vertical

Stack Parameters

Barometric Pressure: 29.16 | Static Pressure: 0.3
CO_2 %: ___/___/___/ Avg. 0.3 | O_2 %: ___/___/___/Avg. 20.2 | Determined by: Method 3 or **Method 3A**
Imp and/or silica balance Model and S/N: S10-82 | Servomex Serial #: Eum 426
Initial Imp. Volume or Weight: 1657.8 | Final Imp. Volume or Weight: 1698.2 | Imp. Volume or Weight Gain: 40.2
Initial Silica Weight: 833.7 | Final Silica Weight: 851.8 | Silica Weight Gain: 18.1

Comments:

Isokinetic Sampling Field Data Sheet-M202

Project Number:	M193103	Date:	11/18/19	Test Number:	3
Client:	General Iron Industries, Inc.	Test Location:	Scrubber Stack	Operator:	JRK Test Tech: KJB/MAK
Plant:	Chicago, IL	Test Method:	5/202	Page Number:	1 of 1

Port-Point #.	Time	(ΔP)	Orifice Setting (ΔH)	Meter Volume (V_m) ft^3, Actual	Square Root, ΔP	Meter Rate, Cubic Feet/ Min.	Theoretical Meter Volume, (V_m) ft^3, per point	Theoretical Meter Volume, (V_m) ft^3, total	Stack Temp, °F	Meter Temp Inlet, °F	Meter Temp Outlet, °F	Pump Vacuum, " Hg	Probe Temp. °F	Filter Temp. °F	Impinger Outlet Well Temp °F	CPM Filter Temp. °F
1-1	1122	.38	1.3	59.19				----------	102	54	53	3	265	265	41	70
1-2	11 24 30	.37	1.3	60.77				60.728	100	53	53	3	265	265	45	72
1-3	1127	.37	1.3	62.26				62.247	105	54	53	4	265	262	49	75
1-4	11 29 30	.36	1.2	63.79				63.761	102	55	53	4	265	266	54	77
1-5	1132	.35	1.2	65.26				65.255	100	55	53	3	266	264	56	75
1-6	11 34 30	.36	1.2	66.74				66.739	104	56	53	4	265	265	59	76
1-7	1137	.36	1.2	68.250				68.234	101	57	54	4	265	264	61	75
1-8	11 39 30	.36	1.2	69.74				69.738	106	57	54	4	265	265	60	69
1-9	1142	.35	1.2	71.25				71.236	107	58	54	4	265	267	67	71
1-10	11 44 30	.35	1.2	72.73				72.718	103	59	54	5	266	265	64	72
1-11	1147	.35	1.2	74.22				74.201	106	61	55	5	265	265	65	71
1-12	11 49 30	.34	1.2	75.67				75.605	102	61	55	5	265	265	66	76
	1152			77.160				77.157								
2-1	1216	.37	1.3	77.316				—	99	57	56	5	265	264	41	70
2-2	12 18 30	.35	1.2	78.850				78.847	103	58	56	5	264	265	42	70
2-3	1221	.34	1.2	80.35				80.331	102	58	58	5	265	266	43	72
2-4	12 23 30	.37	1.2	81.81				81.796	102	57	58	5	265	266	44	75
2-5	1226	.33	1.1	83.26				83.260	101	57	56	5	266	266	47	73
2-6	12 28 30	.33	1.1	84.710				84.703	109	57	56	4	265	267	48	72
2-7	1231	.33	1.1	86.16				86.135	104	58	56	4	265	264	49	72
2-8	12 33 30	.32	1.1	87.58				87.576	102	58	57	5	265	265	50	74
2-9	1236	.32	1.1	89.01				88.998	103	59	57	5	265	265	51	72
2-10	12 38 30	.30	1.0	90.44				90.421	109	60	57	5	265	266	50	71
2-11	1241	.30	1.0	91.800				91.800	100	61	57	4	265	265	52	73
2-12	12 43 30	.29	1	93.18				93.171	105	61	57	5	265	265	51	72
	1246			94.525				94.525								

Purge 1:03

IMPINGER WEIGHT SHEET

PLANT: General Iron

UNIT NO: Scrubber

LOCATION: Stack

DATE: 11.18.19

TEST NO: 3

METHOD: 5/202

WEIGHED/MEASURED BY: SUB

BALANCE ID: S10-82

Scale ID Number _____

Scale Calibration Check Date: _____

Scale Calibration Check (see QS-6.05C for procedure)

250 grams _____

500 grams _____

750 grams _____

Circle One:	FINAL WEIGHT MLS / GRAMS		INITIAL WEIGHT MLS / GRAMS		IMPINGER GAIN		IMPINGER CONTENTS
IMPINGER 1	422.5		410.6				MT
IMPINGER 2	592.3		578.0				MT
IMPINGER 3	683.4		669.2				DI
IMPINGER 4	851.8		833.7				Silica
IMPINGER 5							
IMPINGER 6							
IMPINGER 7							
IMPINGER 8							

IMPINGERS _____ FINAL TOTAL _____ INITIAL TOTAL _____ TOTAL IMPINGER GAIN

SILICA _____ FINAL TOTAL _____ INITIAL TOTAL _____ TOTAL SILICA GAIN

Isokinetic Sampling Cover Sheet

Test Engineer: JRK
Test Technician: KSB / MAKL

Plant Information

Run Number: 4 | Date: 11/18/19 | Project Number: M193103
Test Location: Scrubber Stack | Client Name: General Iron Industries, Inc. | Plant Name: Chicago, IL
Duct Shape: **Circular** or Rectangular | Length: ____ Width: ____ or Diameter: 6.167
Flue Area: 29.870 | Upstream Diameters: 1.4 | Downstream Diameters: 2.0
Port Type: Nipple | Port Length: 6 | Port Diameter: 3
Test Method: 5/202 | Source Condition: Normal

Meter and Probe Data

Meter ID: CM2 | Meter Y Value: 1.011 | ΔH Value: 1.883
Pitot ID: 509A | Pitot Coefficient: .84 | Train Type: Anderson Box
Nozzle Kit ID: teflon kit 6 | Nozzle Diameter: .246 | Filter Number/Weight: #____ / ____
Probe Length: 7ft | Probe Liner: Glass | Thimble Number/Weight: n/a
Pre-Test Nozzle Leak Check: 0 @ 12 "Hg | Post-Test Nozzle Leak Check: 0 @ 10 "Hg
Pre-Test Pitot Leak Check: 0 @ 5 "H_2O | Post-Test Pitot Leak Check: 0 @ 5 "H_2O

Traverse Data

Ports Sampled: 2 | Points/Port: 12 | Min/Point: 2.5
Total Points: 24 | Total Test Time: 60 | Sample Plane: **Horizontal** or Vertical

Stack Parameters

Barometric Pressure: 29.16 | Static Pressure: 0.3
CO_2 %: ____ / ____ / ____ / Avg. 0.4 | O_2 %: ____ / ____ / ____ / Avg. 20.4 | Determined by: Method 3 or **Method 3A**
Imp and/or silica balance Model and S/N: S10-82 | Servomex Serial #: ECOM 416
Initial Imp. Volume or Weight: 1702.8 | Final Imp. Volume or Weight: 1726.4 | Imp. Volume or Weight Gain: 23.6
Initial Silica Weight: 876.5 | Final Silica Weight: 891.7 | Silica Weight Gain: 15.2

Comments:

Isokinetic Sampling Field Data Sheet-M202

Project Number:	M193103	Date:	11 / 18 / 19	Test Number:	4
Client:	General Iron Industries, Inc.	Test Location:	Scrubber Stack	Operator:	JRK Test Tech: MAKI/KJB
Plant:	Chicago, IL	Test Method:	5/202	Page Number:	1 of

Port-Point #.	Time	(ΔP)	Orifice Setting (ΔH)	Meter Volume (V_m) ft^3, Actual	Square Root, ΔP	Meter Rate, Cubic Feet/ Min.	Theoretical Meter Volume, (V_m) ft^3, per point	Theoretical Meter Volume, (V_m) ft^3, total	Stack Temp, °F	Meter Temp Inlet, °F	Meter Temp Outlet, °F	Pump Vacuum, " Hg	Probe Temp. °F	Filter Temp. °F	Impinger Outlet Well Temp °F	CPM Filter Temp. °F
1-1	1640	.36	1.2	0.000				----------	104	53	52	3	265	265	42	71
1-2	164230	.33	1.1	1.50				1.481	103	53	52	3	265	264	47	73
1-3	1645	.37	1.1	2.94				2.980	100	54	52	3	265	264	47	75
1-4	164730	.35	1.2	4.38				4.375	101	53	52	3	264	265	49	76
1-5	1650	.35	1.2	5.86				5.849	108	53	52	3	265	265	51	77
1-6	165230	.36	1.2	7.33				7.314	106	54	52	3	265	265	56	78
1-7	1655	.36	1.2	8.82				8.804	104	54	52	3	265	265	56	79
1-8	165730	.38	1.2	10.31				10.296	102	55	52	3	265	265	58	80
1-9	1700	.38	1.3	11.82				11.797	103	55	52	4	265	265	60	80
1-10	170230	.36	1.2	13.36				13.334	102	55	52	4	265	265	61	80
1-11	1705	.35	1.2	14.85				14.831	107	56	52	4	265	265	60	81
1-12	170730	.34	1.2	16.31				16.302	109	56	52	3	265	266	61	80
	1710			17.750				17.749								
2-1	1726	.37	1.3	18.128				—	105	54	52	4	265	265	43	71
2-2	172830	.36	1.2	19.66				19.640	103	55	52	4	265	264	51	73
2-3	1731	.37	1.3	21.14				21.136	99	56	52	4	265	265	55	74
2-4	173330	.36	1.2	22.68				22.659	101	56	52	4	265	265	57	73
2-5	1736	.37	1.3	24.16				24.158	104	55	53	5	265	266	61	76
2-6	173830	.37	1.3	25.69				25.675	105	55	52	4	265	265	60	76
2-7	1741	.35	1.2	27.20				27.189	109	55	53	4	265	266	61	76
2-8	174330	.35	1.2	28.66				28.658	105	55	53	4	265	265	63	78
2-9	1746	.38	1.2	30.15				30.131	109	55	53	5	265	265	63	76
2-10	174830	.36	1.2	31.65				31.617	109	55	53	4	265	263	62	76
2-11	1751	.35	1.2	33.130				33.116	104	55	53	4	262	264	61	76
2-12	175330	.34	1.2	34.61				34.591	101	55	53	4	265	265	58	78
	1756							36.049								

IMPINGER WEIGHT SHEET

PLANT: General Iron

UNIT NO: Scrubber

LOCATION: Stack

DATE: 11.18.19

TEST NO: 4

METHOD: 5/202

WEIGHED/MEASURED BY: SCB

BALANCE ID: S10-82

Scale ID Number _____

Scale Calibration Check Date: _____

Scale Calibration Check (see QS-6.05C for procedure)

250 grams _____

500 grams _____

750 grams _____

Circle One:	FINAL WEIGHT MLS / GRAMS		INITIAL WEIGHT MLS / GRAMS		IMPINGER GAIN		IMPINGER CONTENTS
IMPINGER 1	412.6		407.2				MT
IMPINGER 2	543.1		536				MT
IMPINGER 3	774.7		758.6				DI
IMPINGER 4	891.7		876.5				Silica
IMPINGER 5							
IMPINGER 6							
IMPINGER 7							
IMPINGER 8							

IMPINGERS _____ FINAL TOTAL _____ INITIAL TOTAL _____ TOTAL IMPINGER GAIN

SILICA _____ FINAL TOTAL _____ INITIAL TOTAL _____ TOTAL SILICA GAIN

✓ JMC 11/15/19

Volumetric Flow Rate Determination Field Data Sheet

Project Number: 6193103 | Date: 11-5-19
Client: GENERAL IRON WORKS | Test Number: PM 1
Test Location: RTO INLET / ROOF | Start Time: 1055
Source Condition: NORMAL | End Time: 1095
Test Engineer: BVG | Test Tech: CMB

Duct Diameter 7.167 ft | Upstream Disturbance, Diameters 2.50
Flue Area 15.60 ft² | Downstream Disturbance, Diameters 7.2
Port Length 6 " Port Size 3 " Port Type MP Pitot ID 148 Pitot Coefficient (C_p) .84
P_{bar} 29.7 "Hg | CO_2 % _____ | Wet Bulb Temp _____ | Leak Checks Passed@
Static 1.5 "H_2O | O_2 % _____ | Dry Bulb Temp _____ | Pre 0.04 Inches H_2O
Static _____ "Hg | N_2 % _____ | B_{ws} _____ | Post 0.04 Inches H_2O
P_s _____ "Hg | Meter No. CM17 | Fluke # _____ | Umbilical ID ___

Port-Point #	ΔP	Temp. °F	$\sqrt{\Delta P}$	Null Point Angle, Degrees	Port-Point #	ΔP	Temp. °F	$\sqrt{\Delta P}$	Null Point Angle, Degrees
1	1.9	76			21	2.1	77		
2	1.8	76			2	2.2	78		
3	2.0	74			3	2.2	78		
4	2.0	75			4	2.2	79		
5	2.2	76			5	1.9	81		
6	2.2	76			6	1.9	77		
7	2.3	76			7	1.8	77		
8	2.5	75			8	1.8	78		
Average									

44 x CO_2% + .32 x O_2% + .28 x N_2% = _____ (Md)

(_____ Md × _____1-Bws) + (18 × _____Bws) = _____ (Ms)

$$85.49 \times ____ Cp \times \sqrt{\frac{(_____)Ts\ °R}{____ Ms \times ____ Ps}} \times ____ \sqrt{\Delta P} = ____ ft/sec\ (Vs)$$

_____ Vs × _____ Flue Area × 60 = _____acfm

$$17.647 \times ____ acfm \times \frac{Ps}{Ts\ °R} = 66064\ scfm \times 60 = _____ scfh$$

Volumetric Flow Rate Determination Field Data Sheet

Project Number: M1603103 | Date: 1-15-19
Client: Cronbrat Iron Industry | Test Number: Post 1 Pre EE
Test Location: RTO Inlet / Roof | Start Time: 1315
Source Condition: Normal | End Time: 1330
Test Engineer: DM | Test Tech: CMR

Duct Diameter 4.167 ft | Upstream Disturbance, Diameters 2.50
Flue Area 13.64 ft² | Downstream Disturbance, Diameters 7.20
Port Length 12" Port Size 3" Port Type MP Pitot ID MP Pitot Coefficient (C_p) .840
P_{bar} 29.7 "Hg | CO_2 % ____ | Wet Bulb Temp ____ | Leak Checks Passed@
Static .75 "H_2O | O_2 % ____ | Dry Bulb Temp ____ | Pre 20 Inches H_2O
Static ____ "Hg | N_2 % ____ | B_{ws} ____ | Post 20 Inches H_2O
P_s ____ "Hg | Meter No. CM17 | Fluke # ____ | Umbilical ID ____

Port-Point #	ΔP	Temp. °F	$\sqrt{\Delta P}$	Null Point Angle, Degrees	Port-Point #	ΔP	Temp. °F	$\sqrt{\Delta P}$	Null Point Angle, Degrees
1	1.9	77			21	1.9	81		
2	1.8	80			2	2.0	81		
3	1.8	80			3	1.8	82		
4	1.8	77			4	1.9	82		
5	2.0	82			5	1.9	82		
6	2.0	82			6	2.0	82		
7	2.3	82			7	2.3	82		
8	2.3	82			8	2.0	82		
Average									

44 x CO_2% + .32 x O_2% + .28 x N_2% = _____ (Md)

(_____ Md × _____1-Bws) + (18 ×_____Bws) = _____ (Ms)

$$85.49 \times ____ Cp \times \sqrt{\frac{(_____)Ts\ °R}{____ Ms \times ____ Ps}} \times ____ \sqrt{\Delta P} = ____ ft/sec\ (Vs)$$

_____ Vs × _____ Flue Area × 60 = _____acfm

$$17.647 \times ____ acfm \times \frac{Ps}{Ts\ °R} = 65\ 714\ scfm \times 60 = _____ scfm$$

65,714 scfm

DS-001 Method 2 Pitot Sheet | Rev. 1.1 | 3/15/2018

Volumetric Flow Rate Determination Field Data Sheet

Project Number: M193103
Date: 11-18-19
Client: GENERAL IRON INDUSTRY, INC
Test Number: PRE 2
Test Location: RTO INLET
Start Time: 0953
Source Condition: NORMAL
End Time: 0900
Test Engineer: BVh
Test Tech: CTM

Duct Diameter 4.167 ft
Flue Area 13.64 ft²
Port Length 6 " Port Size 3 " Port Type Nipple Pitot ID M0A Pitot Coefficient (C_p) .840
P_{bar} 29.2 "Hg
Static 16 "H_2O
Static ____ "Hg
P_s ____ "Hg

CO_2 % ____
O_2 % ____
N_2 % ____
Meter No. CM7

Upstream Disturbance, Diameters 8.13
Downstream Disturbance, Diameters 2.43
Wet Bulb Temp —
Dry Bulb Temp —
B_{ws} ____
Fluke # —

Leak Checks Passed@
Pre ok Inches H_2O
Post ok Inches H_2O
Umbilical ID ____

Port-Point #	ΔP	Temp. °F	$\sqrt{\Delta P}$	Null Point Angle, Degrees	Port-Point #	ΔP	Temp. °F	$\sqrt{\Delta P}$	Null Point Angle, Degrees
1	1.2	88			2-1	1.4	88		
2	1.3	88			2	1.3	80		
3	1.5	88			3	1.3	87		
4	1.5	88			4	1.4	87		
5	1.6	88			5	1.3	87		
6	1.6	87			6	1.5	87		
7	1.8	87			7	1.6	87		
8	2.4	87			8	2.1	87		
Average									

44 x CO_2% + .32 x O_2% + .28 x N_2% = _____ (Md)

(_____ Md × _____1-Bws) + (18 × _____Bws) = _____ (Ms)

$$85.49 \times ____ C_p \times \sqrt{\frac{(_____)T_s\ °R}{____ M_s \times ____ P_s}} \times ____ \sqrt{\Delta P} = ____ \text{ ft/sec } (V_s)$$

_____ Vs × _____ Flue Area × 60 = _____acfm

$$17.647 \times _____ \text{acfm} \times \frac{P_s}{T_s\ °R} = _____ \text{ scfm} \times 60 = _____ \text{ scfh}$$

Volumetric Flow Rate Determination Field Data Sheet

Project Number: M93103
Date: 11-18-19
Client: GENERAL IRON INDUSTRIES, INC
Test Number: POST 2 PRE 3 EE
Test Location: RTO INLET
Start Time: 1126
Source Condition: NORMAL
End Time: 1134
Test Engineer: BVH
Test Tech: CTM

Duct Diameter 9.147 ft
Flue Area 13.64 ft²
Port Length 6 " Port Size 3 " Port Type MPK Pitot ID 140 Pitot Coefficient (C_p) .84
Upstream Disturbance, Diameters 8.5
Downstream Disturbance, Diameters 2.43
P_{bar} 29.97 Hg
Static 16 "H_2O
Static ____ "Hg
P_s ____ "Hg
CO_2 % ____
O_2 % ____
N_2 % ____
Meter No. 8M17
Wet Bulb Temp ____
Dry Bulb Temp ____
B_{ws} ____
Fluke # ____
Leak Checks Passed@
Pre 0.04 Inches H_2O
Post 0.04 Inches H_2O
Umbilical ID ____

Port-Point #	ΔP	Temp. °F	$\sqrt{\Delta P}$	Null Point Angle, Degrees	Port-Point #	ΔP	Temp. °F	$\sqrt{\Delta P}$	Null Point Angle, Degrees
1	1.3	85			1	1.2	87		
2	1.4	87			2	1.3	88		
3	1.4	86			3	1.3	87		
4	1.3	86			4	1.4	87		
5	1.5	86			5	1.5	88		
6	1.7	87			6	1.4	86		
7	1.9	87			7	1.7	86		
8	2.1	87			8	2.0	86		
Average									

$44 \times CO_2\% + .32 \times O_2\% + .28 \times N_2\%$ = _____ (Md)

(_____ Md × _____ 1-Bws) + (18 × _____ Bws) = _____ (Ms)

$85.49 \times$ ____ $C_p \times \sqrt{\frac{(____)T_s\ °R}{____ M_s \times ____ P_s}} \times$ ____ $\sqrt{\Delta P}$ = ____ ft/sec (Vs)

_____ Vs × _____ Flue Area × 60 = _____ acfm

$17.647 \times$ _____ acfm $\times \frac{P_s}{T_s\ °R}$ = _____ scfm x 60 = _____ scfh

Volumetric Flow Rate Determination Field Data Sheet

Project Number: M193103
Client: General Iron, Inc
Test Location: RTO Inlet
Source Condition: Normal
Test Engineer: CVL

Date: 11-18-19
Test Number: Post 3 Pre 4
Start Time: 1445
End Time: 1555
Test Tech: CM

Duct Diameter 7.17 ft
Flue Area 40.47 ft²
Port Length 12 " Port Size 2 " Port Type Nipple Pitot ID 1.41 Pitot Coefficient (C_p) .840

P_{bar} 29.2 "Hg
Static 1.2 "H_2O
Static ____ "Hg
P_s ____ "Hg

CO_2 % ____
O_2 % ____
N_2 % ____
Meter No. CM17

Upstream Disturbance, Diameters 8.15
Downstream Disturbance, Diameters 2.23

Wet Bulb Temp ____
Dry Bulb Temp ____
B_{ws} ____
Fluke # ____

Leak Checks Passed@
Pre -1.0 Inches H_2O
Post -1.0 Inches H_2O
Umbilical ID ____

Port-Point #	ΔP	Temp. °F	$\sqrt{\Delta P}$	Null Point Angle, Degrees	Port-Point #	ΔP	Temp. °F	$\sqrt{\Delta P}$	Null Point Angle, Degrees
1-1	1.3	86			1-1	1.2	86		
2	1.4	88			2	1.3	87		
3	1.4	87			3	1.3	87		
4	1.3	87			4	1.4	88		
5	1.5	87			5	1.5	87		
6	1.7	87			6	1.4	87		
7	1.9	87			7	1.7	88		
8	2.1	87			8	2.0	88		
Average									

44 x CO_2% + .32 x O_2% + .28 x N_2% = _____ (Md)

(_____ Md × _____ 1-Bws) + (18 × _____ Bws) = _____ (Ms)

$$85.49 \times ____ C_p \times \sqrt{\frac{(_____)T_s\ °R}{____ M_s \times ____ P_s}} \times ____ \sqrt{\Delta P} = ____ \text{ ft/sec } (V_s)$$

_____ Vs × _____ Flue Area × 60 = _____ acfm

$$17.647 \times _____ \text{acfm} \times \frac{P_s}{T_s\ °R} = _____ \text{ scfm} \times 60 = _____ \text{ scfh}$$

Volumetric Flow Rate Determination Field Data Sheet

Project Number: M193103
Client: GENERAL IRON, INC
Test Location: RTO INLET
Source Condition: NORMAL
Test Engineer: BVL

Date: 11-18-19
Test Number: POST 5 PRE 6 4EE
Start Time: 1740
End Time: 1748
Test Tech: CTM

Duct Diameter 2.167 ft
Flue Area 3.44 ft²
Port Length 4" Port Size 3" Port Type N-M-4 Pitot ID 28A Pitot Coefficient (C_p) .840
Upstream Disturbance, Diameters 8.13
Downstream Disturbance, Diameters 2.63

P_{bar} 29.8 "Hg
Static .16 "H_2O
Static ____ "Hg
P_s ____ "Hg

CO_2 % 0
O_2 % 20.9
N_2 % ____
Meter No. CM7

Wet Bulb Temp ____
Dry Bulb Temp ____
B_{ws} ____
Fluke # ____

Leak Checks Passed@
Pre <.01 Inches H_2O
Post <.01 Inches H_2O
Umbilical ID ____

Port-Point #	ΔP	Temp. °F	√ΔP	Null Point Angle, Degrees	Port-Point #	ΔP	Temp. °F	√ΔP	Null Point Angle, Degrees
1	1.5	88			1	1.3	86		
2	1.3	87			2	1.4	86		
3	1.5	87			3	1.4	87		
4	1.4	86			4	1.4	88		
5	1.4	86			5	1.4	88		
6	1.8	86			6	1.4	88		
7	1.7	87			7	1.8	87		
8	1.9	87			8	1.9	87		
Average									

44 x CO_2% + .32 x O_2% + .28 x N_2% = _____ (Md)

(_____ Md × _____ 1-Bws) + (18 × _____ Bws) = _____ (Ms)

$$85.49 \times ____ C_p \times \sqrt{\frac{(_____)T_s\ °R}{____ M_s \times ____ P_s}} \times ____ \sqrt{\Delta P} = ____ \text{ ft/sec } (V_s)$$

_____ Vs × _____ Flue Area × 60 = _____ acfm

$$17.647 \times ____ \text{acfm} \times \frac{P_s}{T_s\ °R} = ____ \text{ scfm} \times 60 = ____ \text{ scfh}$$

NON-ISOKINETIC MOISTURE FIELD DATA SHEET

Project Name/Number: General Mov INL M192103 Date: 11-15-19
Test Location: _____ Source Condition: Normal
Test Method: _____ Meter ID: CM17 Pre-Calibration Date: 11-4-19
Meter ΔH: _____ Meter Y: _____ Test Engineer: BVG

Test (Run) No. 1 Barometric Pressure (P_{bar}) 23.7 in. Hg
Static Pressure: 0.5 Stack Temperature: 75 (From Method 2 Test Data)

Gas Sample Analysis
_____ %CO_2 _____ %O_2

Clock Time 24 hour	Meter Volume (Vm) ft3 or L (Circle One)	Meter Gage Pressure (ΔH) in. H_2O	Meter Inlet Temp. (t_m) °F	Meter Outlet Temp. (t_m) °F	Impinger Outlet Temp °F	Meter Vacuum "Hg
1032	11.490	0.9	35	33	60	1
1038	15.48		36	33	60	1
1043	19.20		36	33	60	1
1049	22.85		37	34	60	1
1053	26.70		38	34	60	1
1058	30.45		41	35	60	1
1103/1107	33.20		41	35	60	1
1107/1113	37.05		41	39	60	1
1113/1118	41.70		40	41	60	1
1118/1123	45.45		43	41	60	1
1123	49.20		45	41	60	1
1129	52.95		47	42	60	1
1236	56.720					
Total Vol. in ft3 (Vm)=		Multiply total volume collected in Liters by 0.035315 to convert to ft^3				

Scale ID Number _____
Scale Calibration Check Date: _____
Scale Calibration Check (see QS-6.05C for procedure)
250 grams _____
500 grams _____
750 grams _____

Condensate	Silica Gel or Train
215 / ____ mls (V_f)	249.7 grams (W_f)
- 200 / ____ mls (V_i)	- 241.4 grams (W_i)
= 15 mls gained	= _____ grams gained

Average Meter Temperature: 37.91
(average of both inlet and outlet if applicable)

Comments: PAUSE — 1103-1117 1122-1125 1125-1157 1200-1236

Pre-Test Leak Check: 0.0 @ 5 "Hg
Post-Test Leak Check: 0.0 @ 5 "Hg

Test (Run) No. _____ Barometric Pressure (P_{bar}) _____ in. Hg
Static Pressure: _____ Stack Temperature: _____ (From Method _____ Test Data)

Gas Sample Analysis
_____ %CO_2 _____ %O_2

Clock Time 24 hour	Meter Volume (Vm) ft3 or L (Circle One)	Meter Gage Pressure (ΔH) in. H_2O	Meter Inlet Temp. (t_m) °F	Meter Outlet Temp. (t_m) °F	Impinger Outlet Temp °F	Meter Vacuum "Hg
Total Vol. in ft3 (Vm)=		Multiply total volume collected in Liters by 0.035315 to convert to ft^3				

Condensate	Silica Gel or Train
____/____/____ mls (V_f)	_____ grams (W_f)
-____/____/____ mls (V_i)	- _____ grams (W_i)
= _____ mls gained	= _____ grams gained

Average Meter Temperature: _____
(average of both inlet and outlet if applicable)

Comments:

Pre-Test Leak Check: _____ @ _____ "Hg
Post-Test Leak Check: _____ @ _____ "Hg

NON-ISOKINETIC MOISTURE FIELD DATA SHEET

Project Name/Number: M19310J GENERAL IRON INDUSTRY, INC Date: 11-18-19
Test Location: RTO INLET Source Condition: NORMAL
Test Method: M4 Meter ID: CM17 Pre-Calibration Date: 11-4-19
Meter ΔH: 1.892 Meter Y: .994 Test Engineer: BVH

Test (Run) No. 1 ~~2 EE~~ Barometric Pressure (P_{bar}) 29.2 in. Hg
Static Pressure: 16" Stack Temperature: 85 (From Method 2 Test Data)
Gas Sample Analysis: 0.0 %CO_2 20.9 %O_2

Clock Time 24 hour	Meter Volume (Vm) ~~ft3~~ or L (Circle One)	Meter Gage Pressure (ΔH) in. H_2O	Meter Inlet Temp. (t_m) °F	Meter Outlet Temp. (t_m) °F	Impinger Outlet Temp °F	Meter Vacuum "Hg
0851	58.470	1.8	40	40	60	1
0856	62.25		41	40	60	1
0901	65.95		41	40	60	1
0906	69.70		42	40	60	1
0911	73.45		44	41	60	1
0916	77.25		44	41	60	1
0921	80.95		44	41	60	1
0926	84.75		44	41	60	1
0932	88.45		44	42	60	1
0937	92.20		47	42	60	1
1002	95.95		47	42	60	1
1007	99.75		47	42	60	1
1012	103.680					
Total Vol. in ft3 (Vm)=		Multiply total volume collected in Liters by 0.035315 to convert to ft^3				

Scale ID Number _____
Scale Calibration Check Date: _____
Scale Calibration Check (see QS-6.05C for procedure)
250 grams _____
500 grams _____
750 grams _____

Condensate	Silica Gel or Train
215 / ____ mls (V_f)	255.3 grams (W_f)
-200 / ____ mls (V_i)	-252.0 grams (W_i)
= 15 mls gained	= 3.3 grams gained

Average Meter Temperature: 43.41
(average of both inlet and outlet if applicable)

Comments:

Pre-Test Leak Check: 0.0 @ 5 "Hg
Post-Test Leak Check: 0.0 @ 5 "Hg

Test (Run) No. 2 ~~3 EE~~ Barometric Pressure (P_{bar}) 29.2 in. Hg
Static Pressure: 16" Stack Temperature: 85 (From Method 2 Test Data)
Gas Sample Analysis: 0.0 %CO_2 20.9 %O_2

Clock Time 24 hour	Meter Volume (Vm) ft3 or L (Circle One)	Meter Gage Pressure (ΔH) in. H_2O	Meter Inlet Temp. (t_m) °F	Meter Outlet Temp. (t_m) °F	Impinger Outlet Temp °F	Meter Vacuum "Hg
1122	8.790	1.8	40	40	40	1
1127	7.55		42	40	40	1
1132	11.30		44	40	40	1
1137	15.00		46	40	40	1
1142	18.50		47	41	40	1
1147	22.55		47	41	40	1
1152	26.25		47	41	60	1
1221	30.00		48	42	60	1
1226	33.80		49	42	60	1
1231	37.55		49	43	60	1
1236	41.25		50	43	60	1
1241	45.00		50	43	60	1
1246	48.810					
Total Vol. in ft3 (Vm)=		Multiply total volume collected in Liters by 0.035315 to convert to ft^3				

Condensate	Silica Gel or Train
230 / ____ mls (V_f)	____ grams (W_f)
-215 / ____ mls (V_i)	-250.8 grams (W_i)
= ____ mls gained	= ____ grams gained

Average Meter Temperature: 43.95
(average of both inlet and outlet if applicable)

Comments:

Pre-Test Leak Check: 0.0 @ 5 "Hg
Post-Test Leak Check: 0.0 @ 5 "Hg

NON-ISOKINETIC MOISTURE FIELD DATA SHEET

Project Name/Number: GENERAL IRON, INC. M193103 Date: 2-1 8-17
Test Location: RTO INLET Source Condition: NORMAL
Test Method: M4 Meter ID: CM17 Pre-Calibration Date: 11-4-16
Meter ΔH: 1.342 Meter Y: 1.994 Test Engineer: BVL

Test (Run) No. 3 4 EE Barometric Pressure (P_{bar}) 29.8 in. Hg
Static Pressure: 1.49 Stack Temperature: 85 (From Method 0 Test Data)

Gas Sample Analysis: 0.0 %CO_2 20.9 %O_2

Clock Time 24 hour	Meter Volume (Vm) ft3 or L (Circle One)	Meter Gage Pressure (ΔH) in. H_2O	Meter Inlet Temp. (t_m) °F	Meter Outlet Temp. (t_m) °F	Impinger Outlet Temp °F	Meter Vacuum "Hg
1690	49.925	1.49	40	40	40	1
1695	52.90		41	40	40	1
1650	60.90		43	40	60	1
1655	60.60		47	40	60	1
1700	61.20		45	40	60	1
1705	06.90		45	40	40	1
1710	66.00		45	40	60	1
1731	75.65		44	41	60	1
1736	79.90		44	41	60	1
1741	83.20		44	41	60	1
1746	86.90		44	41	60	1
1751	90.65		44	41	60	1
1756	94.955					
Total Vol. in ft3 (Vm)=		Multiply total volume collected in Liters by 0.035315 to convert to ft^3				

Scale ID Number _____
Scale Calibration Check Date: _____
Scale Calibration Check (see QS-6.05C for procedure)
250 grams _____
500 grams _____
750 grams _____

Condensate	Silica Gel or Train
245 / ____ mls (V_f)	254.7 grams (W_f)
- 250 / ____ mls (V_i)	- 252.7 grams (W_i)
= ____ mls gained	= ____ grams gained

Average Meter Temperature: _____
(average of both inlet and outlet if applicable)

Comments:

Pre-Test Leak Check: 0.0 @ 5 "Hg
Post-Test Leak Check: 0.0 @ 5 "Hg

Test (Run) No. _____ Barometric Pressure (P_{bar}) _____ in. Hg
Static Pressure: _____ Stack Temperature: _____ (From Method _____ Test Data)

Gas Sample Analysis: _____ %CO_2 _____ %O_2

Clock Time 24 hour	Meter Volume (Vm) ft3 or L (Circle One)	Meter Gage Pressure (ΔH) in. H_2O	Meter Inlet Temp. (t_m) °F	Meter Outlet Temp. (t_m) °F	Impinger Outlet Temp °F	Meter Vacuum "Hg
Total Vol. in ft3 (Vm)=		Multiply total volume collected in Liters by 0.035315 to convert to ft^3				

Condensate	Silica Gel or Train
____/____/____ mls (V_f)	____ grams (W_f)
-____/____/____ mls (V_i)	-____ grams (W_i)
= ____ mls gained	= ____ grams gained

Average Meter Temperature: _____
(average of both inlet and outlet if applicable)

Comments:

Pre-Test Leak Check: ____ @ ____ "Hg
Post-Test Leak Check: ____ @ ____ "Hg

Appendix H- Calibration Data

MOSTARDI PLATT

Procedures for Method 4 and Flow Calibration

Dry Gas Meters

The test meters are calibrated according to Method 5, Section 10.3 and 16.1. and "Procedures for Calibrating and Using Dry Gas Volume Meters as Calibration Standards" by P.R. Westlin and R.T. Shigehara, March 10, 1978.

Analytical Balance

The accuracy of the analytical balance is checked with Class S, Stainless Steel Type 303 weights manufactured by F. Hopken and Son, Jersey City, New Jersey.

Temperature Sensing Devices

The potentiometer and thermocouples are calibrated utilizing a NIST traceable millivolt source.

Pitot Tubes

The pitot tubes utilized during this test program are manufactured according to the specification described and illustrated in the *Code of Federal Regulations*, Title 40, Part 60, Appendix A, Methods 1 and 2. The pitot tubes comply with the alignment specifications in Method 2, Section 10.1; and the pitot tube assemblies are in compliance with specifications in the same section.

Dry Gas Meter/Control Module Calibration Diagram

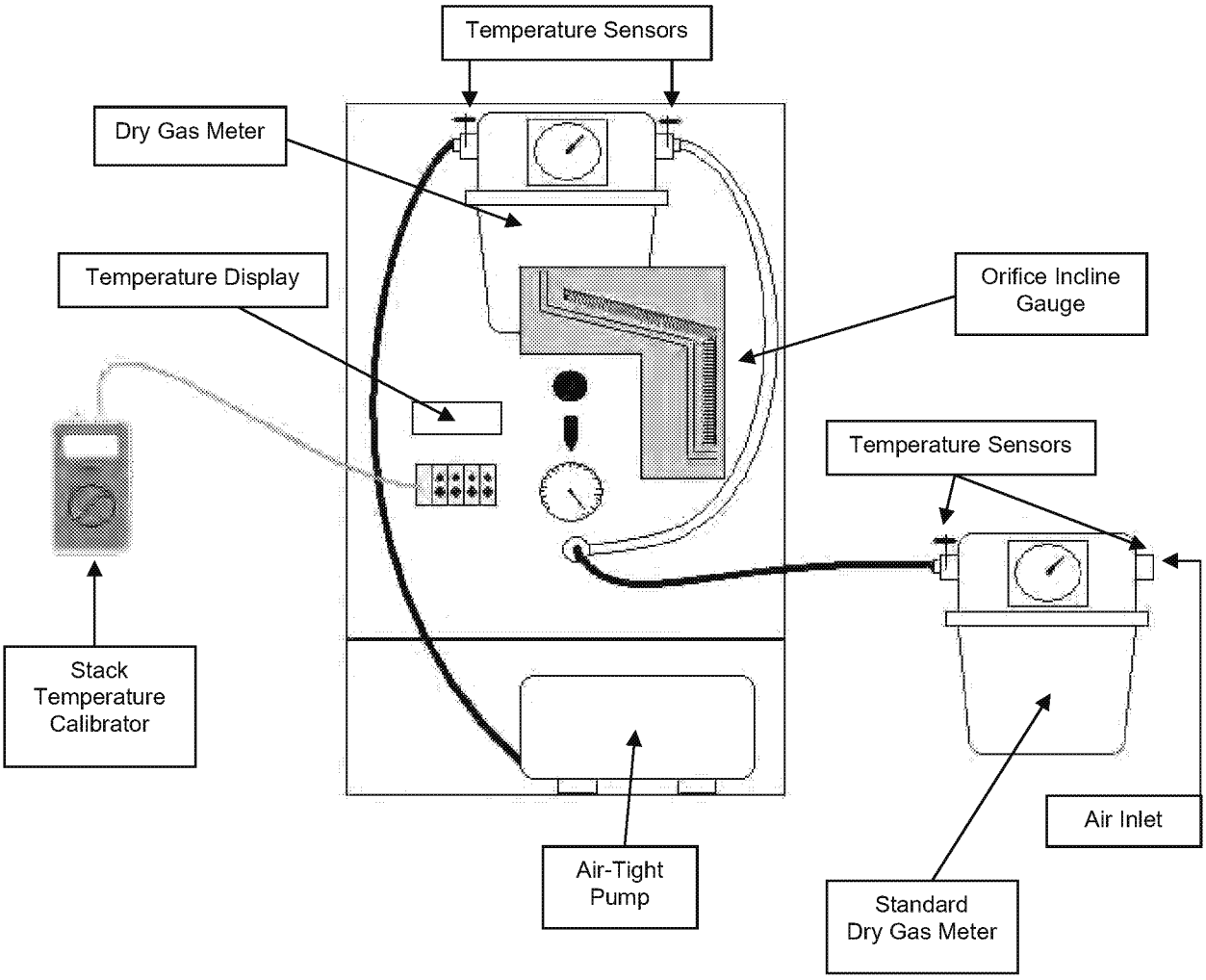

Dry Gas Meter Calibration Data

Dry Gas Meter No.	CM2	Date:	November 4, 2019
Standard Meter No.	366118	Calibrated By:	LEM
Standard Meter (Y)	0.98788	Barometric Pressure:	29.23

Run Number		Orifice Setting in H_2O Chg (H)	Standard Meter Gas Volume vr	Dry Gas Meter Gas Volume vd	Standard Meter Temp. F° tr	Dry Gas Meter Inlet Temp. F° tdi	Dry Gas Meter Outlet Temp. F° tdo	Dry Gas Meter Avg. Temp. F° td	Time Min	Time Sec	Y	Chg (H)
Final			45.126	51.931	62	67	66					
Initial			37.569	44.455	61	66	64					
Difference	1	0.20	7.557	7.476	62	67	65	66	31	4	1.006	1.952
Final			50.521	57.248	62	68	67					
Initial			45.391	52.194	62	67	66					
Difference	2	0.50	5.130	5.054	62	68	67	67	12	55	1.011	1.830
Final			57.870	64.499	63	69	68					
Initial			50.855	57.577	63	68	67					
Difference	3	0.70	7.015	6.922	63	69	68	68	15	9	1.009	1.889
Final			63.915	70.462	63	70	68					
Initial			58.334	64.957	63	69	68					
Difference	4	0.90	5.581	5.505	63	70	68	69	10	32	1.010	1.852
Final			72.637	79.060	63	71	69					
Initial			64.307	70.847	63	69	68					
Difference	5	1.20	8.330	8.213	63	70	69	69	13	44	1.011	1.882
Final			37.413	44.306	61	65	64					
Initial			32.263	39.297	61	64	64					
Difference	6	2.00	5.150	5.009	61	65	64	64	6	35	1.017	1.890
									Average		**1.011**	**1.883**

Stack Temperature Sensor Calibration

Meter Box # : CM2 *Name :* *LEM*

Ambient Temperature : *62* ^{o} *F* *Date :* *November 4, 2019*

Calibrator Model # : *CL23A*

Serial # : *T-285668*

Date Of Certification : *May 9, 2019*

Primary Standards Directly Traceable National Institute of Standards and Technology (NIST)

Reference Source Temperature (^{o} F)	***Test Thermometer Temperature (^{o} F)***	***Temperature Difference %***
0	*0*	0.0
250	*250*	0.0
600	*599*	0.1
1200	*1202*	0.1

$$\frac{(\text{Ref. Temp., }^{o}\text{F} + 460) - (\text{Test Therm. Temp., }^{o}\text{F} + 460)}{\text{Ref. Temp., }^{o}\text{F} + 460} * 100 <= 1.5\ \%$$

Dry Gas Meter Calibration Data

Dry Gas Meter No.	CM2	Date:	November 21, 2019
Standard Meter No.	18654530	Calibrated By:	LEM
Standard Meter (Y)	1.00490	Barometric Pressure:	29.09

Run Number		Orifice Setting in H_2O Chg (H)	Standard Meter Gas Volume vr	Dry Gas Meter Gas Volume vd	Standard Meter Temp. F° tr	Dry Gas Meter Inlet Temp. F° tdi	Dry Gas Meter Outlet Temp. F° tdo	Dry Gas Meter Avg. Temp. F° td	Time Min	Time Sec	Y	Chg (H)
Final			30.285	93.790	66	68	70					
Initial			25.271	88.635	62	66	65					
Difference	1	0.20	5.014	5.155	64	67	68	67	19	32	0.983	1.714
Final			36.150	99.844	63	67	66					
Initial			30.294	93.818	63	66	65					
Difference	2	0.50	5.856	6.026	63	67	66	66	14	30	0.981	1.729
Final			42.533	6.416	63	69	67					
Initial			36.305	0.003	63	67	66					
Difference	3	0.70	6.228	6.413	63	68	67	67	13	13	0.982	1.773
Final			47.822	11.860	63	68	67					
Initial			42.810	6.700	63	68	67					
Difference	4	0.90	5.012	5.160	63	68	67	68	9	33	0.982	1.837
Final			54.224	18.460	63	69	67					
Initial			48.300	12.353	63	68	67					
Difference	5	1.20	5.924	6.107	63	69	67	68	9	30	0.981	1.734
Final			25.167	88.529	62	66	65					
Initial			20.100	83.336	63	65	65					
Difference	6	2.00	5.067	5.193	63	66	65	65	6	15	0.981	1.715
									Average		**0.982**	**1.751**

Stack Temperature Sensor Calibration

Meter Box # : CM2 *Name :* *LEM*

Ambient Temperature : *62* ^{o} *F* *Date :* *November 21, 2019*

Calibrator Model # : *CL23A*

Serial # : *T-285668*

Date Of Certification : *May 9, 2019*

Primary Standards Directly Traceable National Institute of Standards and Technology (NIST)

Reference Source Temperature (^{o} F)	***Test Thermometer Temperature (^{o} F)***	***Temperature Difference %***
0	*0*	0.0
250	*250*	0.0
600	*599*	0.1
1200	*1202*	0.1

$$\frac{(\text{Ref. Temp., }^{o}\text{F} + 460) - (\text{Test Therm. Temp., }^{o}\text{F} + 460)}{\text{Ref. Temp., }^{o}\text{F} + 460} * 100 <= 1.5\ \%$$

Dry Gas Meter Calibration Data

Dry Gas Meter No.	CM17	Date:	November 4, 2019
Standard Meter No.	14159239	Calibrated By:	LEM
Standard Meter (Y)	0.98554	Barometric Pressure:	29.23

Run Number		Orifice Setting in H_2O Chg (H)	Standard Meter Gas Volume vr	Dry Gas Meter Gas Volume vd	Standard Meter Temp. F° tr	Dry Gas Meter Inlet Temp. F° tdi	Dry Gas Meter Outlet Temp. F° tdo	Dry Gas Meter Avg. Temp. F° td	Time Min	Time Sec	Y	Chg (H)
Final			77.025	86.860	64	68	67					
Initial			68.554	78.438	64	66	64					
Difference	1	0.20	8.471	8.422	64	67	66	66	33	56	0.995	1.879
Final			82.832	92.655	64	70	68					
Initial			77.315	87.154	64	69	67					
Difference	2	0.50	5.517	5.501	64	70	68	69	13	39	0.996	1.784
Final			90.234	100.035	64	72	69					
Initial			83.221	93.044	64	71	68					
Difference	3	0.70	7.013	6.991	64	72	69	70	14	35	0.998	1.759
Final			95.865	5.675	64	72	70					
Initial			90.571	0.371	64	71	69					
Difference	4	0.90	5.294	5.304	64	72	70	71	9	45	0.994	1.773
Final			101.448	11.270	64	73	70					
Initial			96.147	5.941	64	72	70					
Difference	5	1.20	5.301	5.329	64	73	70	71	8	54	0.991	1.962
Final			68.274	78.165	64	67	64					
Initial			62.785	72.725	63	64	63					
Difference	6	2.00	5.489	5.440	64	66	64	65	6	59	0.991	1.898
									Average		**0.994**	**1.842**

Stack Temperature Sensor Calibration

Meter Box # : CM17 *Name :* *LEM*

Ambient Temperature : *62* ^{o} *F* *Date :* *November 4, 2019*

Calibrator Model # : *CL23A*

Serial # : *T-285668*

Date Of Certification : *May 9, 2019*

Primary Standards Directly Traceable National Institute of Standards and Technology (NIST)

Reference Source Temperature (^{o} F)	***Test Thermometer Temperature (^{o} F)***	***Temperature Difference %***
0	*1*	0.2
250	*251*	0.1
600	*599*	0.1
1200	*1202*	0.1

$$\frac{(\text{Ref. Temp., }^{o}\text{F} + 460) - (\text{Test Therm. Temp., }^{o}\text{F} + 460)}{\text{Ref. Temp., }^{o}\text{F} + 460} * 100 <= 1.5\ \%$$

Dry Gas Meter Calibration Data

Dry Gas Meter No.	CM17	Date:	November 19, 2019
Standard Meter No.	14159239	Calibrated By:	KJW
Standard Meter (Y)	0.98554	Barometric Pressure:	29.06

Run Number		Orifice Setting in H_2O Chg (H)	Standard Meter Gas Volume vr	Dry Gas Meter Gas Volume vd	Standard Meter Temp. F° tr	Dry Gas Meter Inlet Temp. F° tdi	Dry Gas Meter Outlet Temp. F° tdo	Dry Gas Meter Avg. Temp. F° td	Time Min	Time Sec	Y	Chg (H)
Final			53.966	16.917	65	67	65					
Initial			48.173	11.120	63	64	64					
Difference	1	0.20	5.793	5.797	64	66	65	65	21	38	0.986	1.646
Final			59.795	22.735	66	68	66					
Initial			54.741	17.684	64	67	65					
Difference	2	0.50	5.054	5.051	65	68	66	67	12	22	0.988	1.769
Final			66.048	28.998	66	69	67					
Initial			61.020	23.959	65	68	66					
Difference	3	0.70	5.028	5.039	66	69	67	68	10	21	0.985	1.752
Final			72.149	35.122	67	70	67					
Initial			67.134	30.087	65	68	67					
Difference	4	0.90	5.015	5.035	66	69	67	68	9	15	0.983	1.811
Final			77.794	40.791	67	70	68					
Initial			72.773	35.748	66	69	67					
Difference	5	1.20	5.021	5.043	67	70	68	69	8	2	0.982	1.818
Final			47.614	10.566	65	66	62					
Initial			41.258	4.233	63	62	61					
Difference	6	2.00	6.356	6.333	64	64	62	63	8	6	0.982	1.925
									Average		**0.984**	**1.787**

Stack Temperature Sensor Calibration

Meter Box # : CM17 *Name :* *KJW*

Ambient Temperature : *60* ^{o} *F* *Date :* *November 19, 2019*

Calibrator Model # : *CL23A*

Serial # : *T-285668*

Date Of Certification : *May 9, 2019*

Primary Standards Directly Traceable National Institute of Standards and Technology (NIST)

Reference Source Temperature (^{o} F)	***Test Thermometer Temperature (^{o} F)***	***Temperature Difference %***
0	*0*	0.0
250	*250*	0.0
600	*599*	0.1
1200	*1202*	0.1

$$\frac{(\text{Ref. Temp., }^{o}\text{F} + 460) - (\text{Test Therm. Temp., }^{o}\text{F} + 460)}{\text{Ref. Temp., }^{o}\text{F} + 460} * 100 <= 1.5\ \%$$

S TYPE PITOT TUBE INSPECTION WORKSHEET

Pitot Tube No: 148 Date: 10/31/2019 Inspectors Name: KJD

Type of Probe: (circle one) M2 M5 M17 Probe Length: 6 ft.

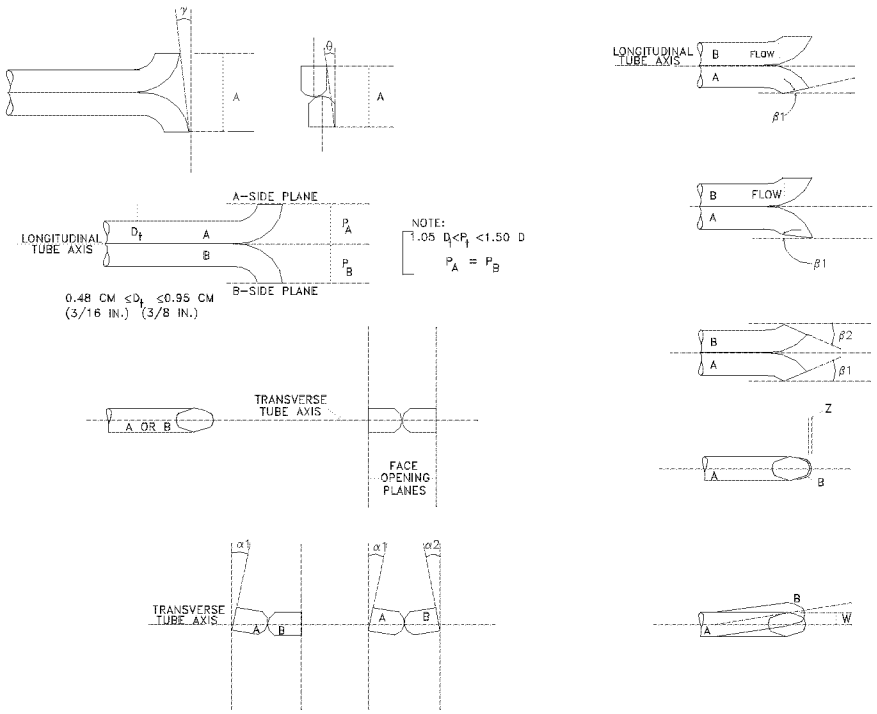

Pitot tube assembly level? X yes _____ no

Pitot tube openings damaged? _____ yes (explain below) X no

a_1 = 1.5 ° (<10°), a_2 = 1 ° (<10°) z = A sin g = 0.000 (in.); (<0.125 in.)

b_1 = 3 ° (<5°), b_2 = 0 ° (<5°) w = A sin q = 0.024 (in.); (<0.03125 in.)

γ = 0 °, θ = 1.5 °, A = 0.930 (in.) P_A = 0.465 (in.), P_B = 0.465 (in.), D_t = 0.375 (in.)

Calibration required? _____ yes X no

S TYPE PITOT TUBE INSPECTION WORKSHEET

Pitot Tube No: 148 Date: 11/21/2019 Inspectors Name: WAP

Type of Probe: (circle one) M2 M5 M17 Probe Length: 6 ft.

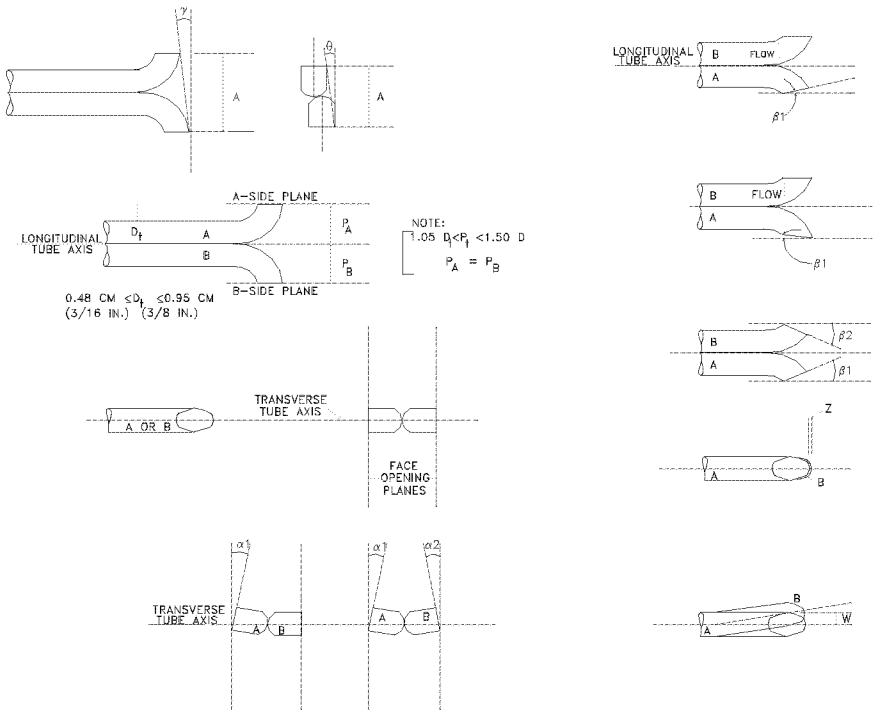

Pitot tube assembly level? X yes _____ no

Pitot tube openings damaged? _____ yes (explain below) X no

a_1 = 0 ° (<10°), a_2 = 2 ° (<10°) z = A sin g = 0.000 (in.); (<0.125 in.)

b_1 = 2.5 ° (<5°), b_2 = 0.5 ° (<5°) w = A sin q = 0.000 (in.); (<0.03125 in.)

γ = 3.5 °, θ = 0 °, A = 0.995 (in.) P_A = 0.498 (in.), P_B = 0.498 (in.), D_t = 0.375 (in.)

Calibration required? _____ yes X no

S TYPE PITOT TUBE INSPECTION WORKSHEET

Pitot Tube No: 560 Date: 10/22/2019 Inspectors Name: WAP

Type of Probe: (circle one) M2 M5 M17 Probe Length: 7 ft.

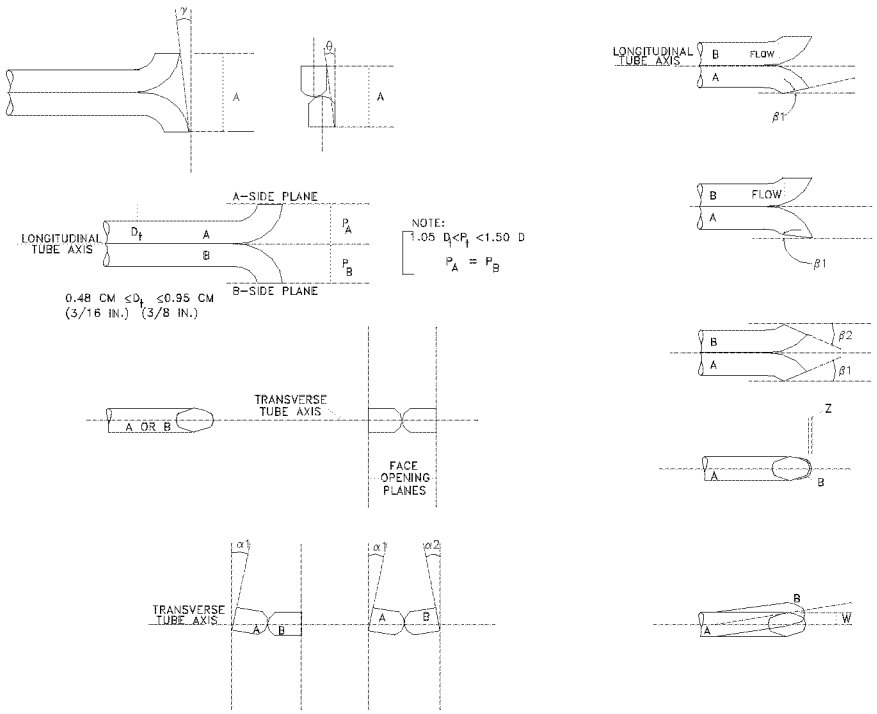

Pitot tube assembly level? X yes _____ no

Pitot tube openings damaged? _____ yes (explain below) X no

a_1 = 0.5 ° (<10°), a_2 = 2.5 ° (<10°) z = A sin g = 0.000 (in.); (<0.125 in.)

b_1 = 1.5 ° (<5°), b_2 = 1.5 ° (<5°) w = A sin q = 0.041 (in.); (<0.03125 in.)

γ = 0.5 °, θ = 2.5 °, A = 0.950 (in.) P_A = 0.475 (in.), P_B = 0.475 (in.), D_t = 0.375 (in.)

Calibration required? _____ yes x no

S TYPE PITOT TUBE INSPECTION WORKSHEET

Pitot Tube No: 569 Date: 11/21/2019 Inspectors Name: WAP

Type of Probe: (circle one) M2 M5 M17 Probe Length: 7 ft.

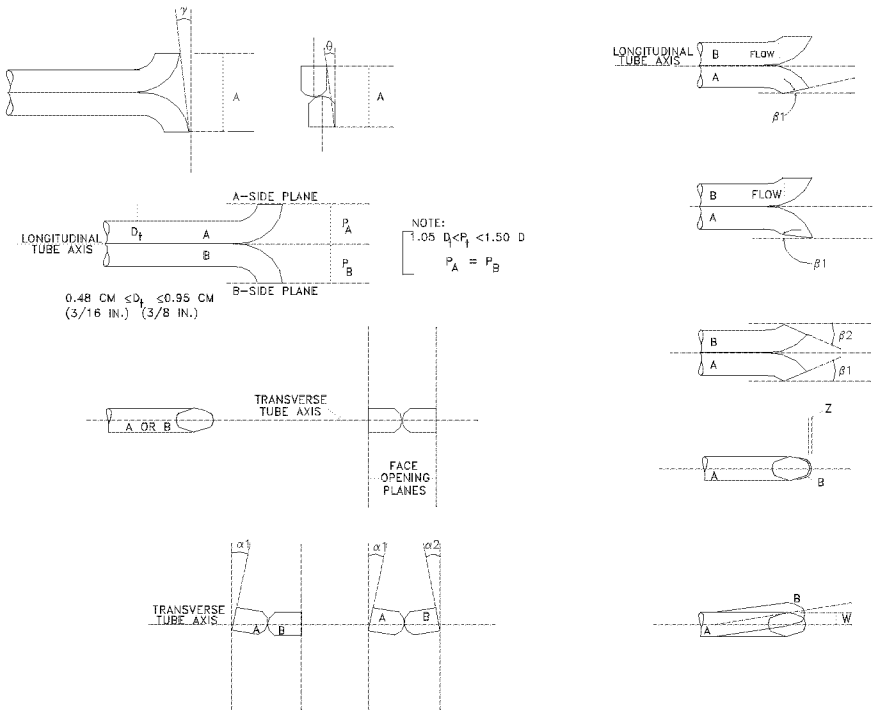

Pitot tube assembly level? X yes _____ no

Pitot tube openings damaged? _____ yes (explain below) X no

a_1 = 0.5 ° (<10°), a_2 = 0.5 ° (<10°) z = A sin g = 0.000 (in.); (<0.125 in.)

b_1 = 2 ° (<5°), b_2 = 1 ° (<5°) w = A sin q = 0.025 (in.); (<0.03125 in.)

γ = 1 °, θ = 1.5 °, A = 0.951 (in.) P_A = 0.476 (in.), P_B = 0.476 (in.), D_t = 0.375 (in.)

Calibration required? _____ yes X no

Client: General Iron Industries, Inc.
Facility: Chicago, IL
Project #: M193103
Operating Condition: Normal

Test Location: RTO Inlet and Scrubber Stack
Date: 11/15/19
Operator: R. Sollars

Type	Setting	Cylinder ID	Cylinder Value	Predicted Value	Predicted Value Difference, %	Analyzer Response	Difference, % of Cylinder	Expiration Date	Final Bottle Pressure, PSI
THC In ppmv	Zero	Zero Air	0	N/A	N/A	0.00	0.00%	N/A	>500
	Low	CC494386	301.2	300.30	-0.70%	302.41	-0.40%	7/9/2026	>500
	Mid	CC486863	604.3	602.50	-0.07%	602.94	0.23%	4/15/2027	>500
	High	SG916341BAL	907.6	N/A	N/A	904.90	0.30%	8/6/2026	>500
THC Out ppmv	Zero	Zero Air	0	N/A	N/A	-0.10	0.01%	N/A	>500
	Low	CC400409	10.07	10.08	-0.75%	10.16	-0.03%	3/2/2025	>500
	Mid	CC430551	20.13	20.26	-3.74%	21.01	-0.15%	1/21/2027	>500
	High	EB0065467	30.03	N/A	N/A	30.27	-0.03%	7/5/2024	>500

Response Time Data

Type	RM Analyzer Make/Model	RM Analyzer s/n	Analyzer Span	RM Gas Span
THC In ppmv	Thermo 51i	1171210055	5000	1111
THC Out ppmv	Thermo 51i	1171210056	1000	37
	Start		95% Response	Time (min)
Upscale				1
Downscale				1

Client: General Iron Industries, Inc.
Facility: Chicago, IL

Location: RTO Inlet and Scrubber Stack
Date: 11/15/19
Operator: R. Sollars
Project #: M193103

THC In ppmv Calibration Data

Run #	Cma	Precal	Postcal	Pre zero	Post zero	Co	Cm	C	Cgas	Span Bias	Span Drift	Zero Bias	Zero Drift
1	604.30	602.94	608.26	0.00	0.12	0.06	605.60	497.20	497.2	-0.66	0.48	-0.01	0.01

THC Out ppmv Calibration Data

Run #	Cma	Precal	Postcal	Pre zero	Post zero	Co	Cm	C	Cgas	Span Bias	Span Drift	Zero Bias	Zero Drift
1	20.13	21.01	20.90	-0.10	0.12	0.01	20.96	7.90	7.9	-3.83	-0.30	-0.32	0.59

Calibration Corrected Data

Run #	Run Date	Start Time	End Time	THC In ppmv	THC Out ppmv
1	11/15/19	10:33	13:17	497.2	7.9

Client: General Iron Industries, Inc.
Facility: Chicago, IL
Project #: M193103
Test Location: RTO Inlet and Scrubber Stack
Operating Condition: Normal
Date: 11/15/19

Linearity Cal/Pre 1 Cal

Time	THC In ppmv		THC Out ppmv	
7:38	0.07		0.05	
7:39	0.05		-0.11	
7:40	0.02		-0.13	
7:41	0.02		-0.04	
7:42	0.04		0.00	
7:43	0.04		-0.06	
7:44	-0.01		-0.07	
7:45	0.00	z	-0.10	z
7:46	0.01		71.42	
7:47	0.02		86.29	
7:48	1616.98		90.69	
7:49	4503.33		90.97	
7:50	4559.67		90.77	
7:51	4578.51		90.68	
7:52	4589.89		59.12	
7:53	4596.49		59.93	
7:54	4596.83		60.93	
7:55	4599.23		61.07	
7:56	4609.93		61.19	
7:57	3268.85		61.37	
7:58	3043.89		61.36	
7:59	3039.42		61.13	
8:00	3033.32		36.56	
8:01	3029.93		0.90	
8:02	3028.85		0.53	
8:03	1302.52		0.55	
8:04	98.18		0.51	
8:05	1505.79		0.45	
8:06	1498.26		0.45	
8:07	1495.72		0.37	
8:08	1494.78		0.30	
8:09	1484.60		0.33	
8:10	1494.73		0.25	
8:11	825.42		28.26	
8:12	36.03		30.28	
8:13	23.58		30.27	h
8:14	18.19		28.57	
8:15	588.93		1.42	
8:16	908.10		13.39	
8:17	906.72		20.83	
8:18	906.45		20.94	
8:19	906.61		21.01	m
8:20	904.90	h	21.11	
8:21	824.37		12.18	
8:22	610.14		8.70	
8:23	606.44		10.25	
8:24	604.89		10.16	l
8:25	603.59		7.94	
8:26	602.94	m	0.19	
8:27	453.57		0.73	
8:28	306.14		0.39	
8:29	304.35		0.20	
8:30	303.27		0.16	
8:31	303.03		0.09	
8:32	302.41	l	0.08	
10:14	610.12		20.28	m
10:15	602.51	m	19.08	
10:16	597.79		1.62	
10:17	97.79		1.92	
10:18	21.76		2.00	
10:19	18.84		0.57	
10:20	12.60		0.05	
10:21	7.92		-0.03	
10:22	5.57		-0.07	
10:23	4.15	z	-0.11	z

Client: General Iron Industries, Inc.
Facility: Chicago, IL
Project #: M193103

Test Location: RTO Inlet and Scrubber Stack
Operating Condition: Normal
Date: 11/15/19

Post 1

Time	THC In ppmv		THC Out ppmv	
13:35	612.03		20.93	
13:36	608.26	m	20.90	m
13:37	606.18		5.53	
13:38	487.07		0.81	
13:39	37.76		0.68	
13:40	5.21		0.27	
13:41	1.89		0.19	
13:42	0.12	z	0.12	z

Client: General Iron Industries, Inc.
Facility: Chicago, IL
Project #: M193103
Operating Condition: Normal

Test Location: RTO Inlet and Scrubber Stack
Date: 11/18/19
Operator: R. Sollars

Type	Setting	Cylinder ID	Cylinder Value	Predicted Value	Predicted Value Difference, %	Analyzer Response	Difference, % of Cylinder	Expiration Date	Final Bottle Pressure, PSI
THC In ppmv	Zero	Zero Air	0	N/A	N/A	2.86	-0.32%	N/A	>500
	Low	CC494386	301.2	299.35	-1.69%	304.43	-1.07%	7/9/2026	>500
	Mid	CC486863	604.3	597.71	-2.32%	611.73	-1.23%	4/15/2027	>500
	High	SG916341BAL	907.6	N/A	N/A	896.27	1.25%	8/6/2026	>500
THC Out ppmv	Zero	Zero Air	0	N/A	N/A	-0.09	0.01%	N/A	>500
	Low	CC400409	10.07	9.98	-1.09%	10.09	-0.01%	3/2/2025	>500
	Mid	CC430551	20.13	20.04	-1.94%	20.43	-0.05%	1/21/2027	>500
	High	EB0065467	30.03	N/A	N/A	29.94	0.01%	7/5/2024	>500

Response Time Data

Type	RM Analyzer Make/Model	RM Analyzer s/n	Analyzer Span	RM Gas Span
THC In ppmv	Thermo 51i	1171210055	5000	1111
THC Out ppmv	Thermo 51i	1171210056	1000	37
	Start		95% Response	Time (min)
Upscale				1
Downscale				1

Client: General Iron Industries, Inc.
Facility: Chicago, IL

Location: RTO Inlet and Scrubber Stack
Date: 11/18/19
Operator: R. Sollars
Project #: M193103

THC In ppmv Calibration Data

Run #	Cma	Precal	Postcal	Pre zero	Post zero	Co	Cm	C	Cgas	Span Bias	Span Drift	Zero Bias	Zero Drift
2	604.30	611.73	614.43	2.86	2.12	2.49	613.08	599.10	599.1	-1.68	0.24	-0.19	-0.07
3	604.30	614.43	602.23	2.12	3.44	2.78	608.33	523.80	523.8	0.34	-1.10	-0.31	0.12
4	604.30	602.23	601.29	3.44	-3.64	-0.10	601.76	642.40	642.4	0.50	-0.08	0.33	-0.64

THC Out ppmv Calibration Data

Run #	Cma	Precal	Postcal	Pre zero	Post zero	Co	Cm	C	Cgas	Span Bias	Span Drift	Zero Bias	Zero Drift
2	20.13	20.43	20.82	-0.09	-0.03	-0.06	20.63	5.80	5.8	-3.43	1.05	0.08	0.16
3	20.13	20.82	20.39	-0.03	-0.03	-0.03	20.61	5.50	5.5	-1.29	-1.16	0.08	0.00
4	20.13	20.39	20.34	-0.03	0.05	0.01	20.37	6.80	6.8	-1.04	-0.14	-0.14	0.22

Calibration Corrected Data

Run #	Run Date	Start Time	End Time	THC In ppmv	THC Out ppmv
2	11/18/19	8:51	10:11	599.1	5.8
3	11/18/19	11:22	12:45	523.8	5.5
4	11/18/19	14:40	17:55	642.4	6.8

Client: General Iron Industries, Inc.
Facility: Chicago, IL
Project #: M193103
Test Location: RTO Inlet and Scrubber Stack
Operating Condition: Normal
Date: 11/18/19

Linearity Cal/Pre 2 Cal

Time	THC In ppmv		THC Out ppmv	
6:30	0.18		0.64	
6:31	0.19		0.54	
6:32	0.18		0.59	
6:33	0.22		0.52	
6:34	0.18		0.49	
6:35	0.16		0.43	
6:36	0.17		0.43	
6:37	0.20		0.42	
6:38	0.17		0.17	
6:39	0.20		-0.40	
6:40	0.22		-0.40	
6:41	0.22		-0.41	
6:42	0.25		-0.44	
6:43	0.21		-0.21	
6:44	0.22		-0.02	
6:45	0.19		0.04	
6:46	0.20		0.05	
6:47	0.18		0.14	
6:48	0.19		0.56	
6:49	0.17		28.48	
6:50	1423.65		92.50	
6:51	4247.28		91.07	
6:52	4543.58		91.06	
6:53	4553.07		91.10	
6:54	4556.97		44.81	
6:55	4563.97		61.27	
6:56	4230.65		61.33	
6:57	2982.92		61.26	
6:58	2942.19		61.23	
6:59	2936.39		52.42	
7:00	2693.59		2.19	
7:01	2934.04		1.76	
7:02	1573.69		32.65	
7:03	938.56		29.94	
7:04	906.65		29.94	
7:05	902.79		29.94	h
7:06	898.45		29.90	
7:07	896.27	h	29.88	
7:08	889.87		13.72	
7:09	614.86		20.64	
7:10	602.89		20.69	
7:11	601.11		20.68	
7:12	606.11		12.56	
7:13	124.51		10.00	
7:14	12.97		10.13	
7:15	13.52		10.10	
7:16	208.17		10.09	l
7:17	303.91		2.84	
7:18	304.44		1.48	
7:19	304.43	l	1.43	
7:20	877.35		1.11	
7:21	1443.53		1.27	
7:22	1450.03		1.30	
7:23	1452.21		1.59	
7:24	1452.42		1.18	
8:07	3.31		0.00	
8:08	2.83		-0.12	
8:09	2.86	z	-0.09	z
8:10	472.27		16.28	
8:11	596.98		19.84	
8:12	610.85		20.39	
8:13	611.73	m	20.43	m

Client: General Iron Industries, Inc.
Facility: Chicago, IL
Project #: M193103

Test Location: RTO Inlet and Scrubber Stack
Operating Condition: Normal
Date: 11/18/19

Post 2/Pre 3

Time	THC In ppmv		THC Out ppmv	
10:15	101.12		0.02	
10:16	73.73		0.03	
10:17	59.62		0.02	
10:18	33.12		-0.01	
10:19	22.81		-0.02	
10:20	11.36		-0.03	z
10:21	6.82		2.39	
10:22	3.10		19.86	
10:23	2.61		20.27	
10:24	2.12	z	20.37	
10:25	5.02		20.82	m
10:26	5.25		21.12	
10:27	169.29		35.23	
10:28	664.18		3.63	
10:29	613.78		50.52	
10:30	613.76		61.40	
10:31	614.43	m	62.12	
10:32	614.91		61.98	
10:33	615.03		61.94	
10:34	289.88		61.88	
10:35	2860.58		45.16	
10:36	3001.70		5.39	

Post 3

Time	THC In ppmv		THC Out ppmv	
12:50	67.28		0.07	
12:51	46.60		0.07	
12:52	26.14		0.01	
12:53	12.64		-0.03	z
12:54	8.86		7.28	
12:55	10.27		20.53	
12:56	6.53		20.39	m
12:57	3.44	z	20.28	
12:58	12.00		16.25	
12:59	562.94		27.26	
13:00	602.23	m	61.53	
13:01	598.09		61.30	
13:02	573.06		61.14	
13:03	1538.05		22.13	
13:04	2988.49		0.57	
13:05	3011.53		0.33	
13:06	3015.33		0.41	

Pre 4

Time	THC In ppmv		THC Out ppmv	
15:16	-3.46		0.04	
15:17	-3.62		0.05	z
15:18	-3.64	z	47.61	
15:19	2241.53		62.04	
15:20	2968.73		61.99	
15:21	2996.50		61.90	
15:22	2995.84		61.51	
15:23	2083.41		4.67	
15:24	645.80		21.26	
15:25	608.57		20.69	
15:26	603.56		20.46	
15:27	598.48		20.27	
15:28	601.29	m	20.34	m

Post 4

Time	THC In ppmv		THC Out ppmv	
17:57	522.90		28.91	
17:58	2500.12		62.48	
17:59	2987.04		62.20	
18:00	2970.94		62.29	
18:01	2959.64		20.88	
18:02	2932.41		20.84	
18:03	1174.92		21.08	m
18:04	744.91		20.97	
18:05	606.82		19.14	
18:06	599.49		1.57	
18:07	603.80	m	-0.02	
18:08	616.95		-0.05	z
18:09	106.40		1.69	
18:10	177.38		1.10	
18:11	187.63		0.79	
18:12	-47.72		1.68	
18:13	48.82		1.02	
18:14	2.71		0.67	
18:15	0.91	z	2.23	

Client: General Iron Industries, Inc.
Facility: Chicago, IL
Project #: M193103

Test Location: Scrubber Stack
Operator: JRK
Test Methods: 3A,5/202

Calibration Gases - Linearity

Type	Setting	Cylinder ID	Cylinder Value	Analyzer Response	Difference, % of Span	Expiration Date	Mid cylinder % of high cylinder
CO_2%	Zero	Zero Nitrogen	0	0.00	0.00%	N/A	
	Mid	ET0006082	9.936	10.00	-0.34%	9/9/2027	53.08%
	High	XL361318B	18.72	18.70	0.11%	6/14/2027	
O_2%	Zero	Zero Nitrogen	0	0.00	0.00%	N/A	
	Mid	ET0006082	9.993	10.10	-0.52%	9/9/2027	48.21%
	High	CC238024	20.73	20.70	0.14%	3/8/2025	

Analyzer Data

Type	Model/Serial #
CO_2 %	Servomex 01440D1/3934
O_2 %	Servomex 01440D1/3934

CO_2 % Correction Data

Run #	Source Condition	Start Time	End Time	Date	Cma	Precal	Postcal	Pre zero	Post zero	Co	Cm	C	Cgas	Span Bias	Span Drift	Zero Bias	Zero Drift
1	Normal	10:33	13:18	11/15/2019	9.94	10.00	10.10	0.00	0.00	0.00	10.05	0.36	0.4	-0.53	0.53	0.00	0.00
2	Normal	8:51	10:12	11/18/2019	9.94	10.10	10.10	0.00	0.00	0.00	10.10	0.46	0.5	-0.53	0.00	0.00	0.00
3	Normal	11:22	12:46	11/18/2019	9.94	10.10	10.10	0.00	0.00	0.00	10.10	0.34	0.3	-0.53	0.00	0.00	0.00
4	Normal	16:40	17:56	11/18/2019	9.94	10.10	10.10	0.00	0.00	0.00	10.10	0.43	0.4	-0.53	0.00	0.00	0.00

O_2 % Correction Data

Run #	Source Condition	Start Time	End Time	Date	Cma	Precal	Postcal	Pre zero	Post zero	Co	Cm	C	Cgas	Span Bias	Span Drift	Zero Bias	Zero Drift
1	Normal	10:33	13:18	11/15/2019	9.99	10.10	10.00	0.00	0.00	0.00	10.05	20.16	20.0	0.48	-0.48	0.00	0.00
2	Normal	8:51	10:12	11/18/2019	9.99	10.10	10.10	0.00	0.00	0.00	10.10	20.37	20.2	0.00	0.00	0.00	0.00
3	Normal	11:22	12:46	11/18/2019	9.99	10.10	10.00	0.00	0.00	0.00	10.05	20.35	20.2	0.48	-0.48	0.00	0.00
4	Normal	16:40	17:56	11/18/2019	9.99	10.00	10.10	0.00	0.00	0.00	10.05	20.51	20.4	0.00	0.48	0.00	0.00

Client: General Iron Industries, Inc.
Facility: Chicago, IL
Project #: Scrubber Stack
Test Location: M193103

Linearity Cal/Pre 1 Cal
Date: 11/15/2019

Time	O2 % (dry)		CO2 % (dry)	
8:14	21.00		0.00	
8:14	20.70	ih	0.00	
8:15	20.70	h	0.00	
8:15	20.70		0.00	
8:15	17.00		0.00	
8:15	19.30		18.70	
8:16	19.30		18.70	ih
8:16	19.30		18.70	h
8:16	19.30		18.70	
8:16	19.30		16.70	
8:17	7.30		2.80	
8:17	2.20		1.00	
8:17	0.90		0.50	
8:17	0.50		0.30	
8:18	0.30		0.20	
8:18	0.00		0.00	
8:18	0.00	iz	0.00	iz
8:18	0.00	z	0.00	z
8:19	0.00		0.00	
8:19	6.50		9.80	
8:19	10.20		10.80	
8:19	10.00		10.20	
8:20	10.00		10.00	
8:20	10.10		10.00	
8:20	10.10	im	10.00	im
8:20	10.10	m	10.00	m

Client: General Iron Industries, Inc.
Facility: Chicago, IL
Project #: Scrubber Stack
Test Location: M193103

Linearity Cal/Pre 2 Cal
Date: 11/18/2019

Time	O2 % (dry)		CO2 % (dry)	
6:48	20.80		0.00	
6:48	20.70	ih	0.00	
6:48	20.70	h	0.00	
6:49	20.70		0.00	
6:49	19.60		18.90	
6:49	19.60		19.00	
6:49	19.60		18.70	ih
6:50	19.60		18.70	h
6:50	19.60		18.70	
6:50	19.60		18.70	
6:50	11.40		10.70	
6:51	3.30		4.30	
6:51	1.00		2.00	
6:51	0.50		1.20	
6:51	0.00		0.00	
6:52	0.00		0.00	
6:52	0.00	iz	0.00	iz
6:52	0.00	z	0.00	z
6:52	0.00		0.00	
6:53	0.00		0.00	
6:53	0.00		0.00	
6:53	3.40		4.80	
6:53	8.10		8.30	
6:54	9.70		9.40	
6:54	10.10		9.70	
6:54	10.10		10.10	
6:54	10.10		10.10	
6:55	10.10	im	10.10	im
6:55	10.10	m	10.10	m
6:55	10.10		10.10	
6:55	10.30		10.20	

Client: General Iron Industries, Inc.
Facility: Chicago, IL

Test Location: Scrubber Stack
Project #: M193103

Post 1

Time	O2 % (dry)		CO2 % (dry)	
13:21	10.00		10.10	
13:21	10.00	m	10.10	m
13:21	10.00		10.10	
13:21	10.00		7.80	
13:22	3.80		1.40	
13:22	1.20		0.40	
13:22	0.60		0.20	
13:22	0.30		0.10	
13:23	0.30		0.10	
13:23	0.00		0.00	
13:23	0.00		0.00	
13:23	0.00	z	0.00	z
13:24	0.00		0.00	
13:24	0.00		0.00	
13:24	0.00		0.00	
13:24	0.00		0.00	

Post 2

Time	O2 % (dry)		CO2 % (dry)	
10:13	10.40		10.20	
10:13	10.20		10.10	
10:13	10.10		10.10	
10:13	10.10	m	10.10	m
10:14	10.1		10.10	
10:14	7.70		6.50	
10:14	3.30		2.90	
10:14	1.40		1.40	
10:15	0.70		0.80	
10:15	0.00		0.00	
10:15	0.00		0.00	
10:15	0.00	z	0.00	z
10:16	0.00		0.00	
10:16	0.00		0.00	

Post 3/Pre 4

Time	O2 % (dry)		CO2 % (dry)	
12:50	0.60		0.00	
12:50	0.00		0.00	
12:51	0.00	z	0.00	z
12:51	0.00		0.00	
12:51	0.00		4.30	
12:51	7.30		8.20	
12:52	9.20		9.30	
12:52	9.70		9.60	
12:52	9.90		9.80	
12:52	10.00		10.10	
12:53	10.00	m	10.10	m
12:53	10.00		10.10	

Post 4

Time	O2 % (dry)		CO2 % (dry)	
0.75	10.10		10.10	
0.75	10.10		10.10	
0.75	10.10		10.10	
0.75	10.10	m	10.10	m
0.75	10.10		10.10	
0.75	0.00		0.00	
0.75	0.00		0.00	
0.75	0.00	z	0.00	z
0.75	0.00		0.00	
0.75	0.00		0.00	
0.75	0.00		0.00	

Appendix I- Gas Cylinder Certifications

Airgas
an Air Liquide company

Airgas Specialty Gases
Airgas USA, LLC
12722 S. Wentworth Ave.
Chicago, IL 60628
Airgas.com

CERTIFICATE OF ANALYSIS

Grade of Product: EPA Protocol

Part Number:	E02AI99E15A1734	Reference Number:	54-124604145-6
Cylinder Number:	CC400409	Cylinder Volume:	146.2 CF
Laboratory:	124 - Chicago - IL	Cylinder Pressure:	2015 PSIG
PGVP Number:	B12017	Valve Outlet:	590
Gas Code:	PPN,BALA	Certification Date:	Mar 02, 2017

Expiration Date: Mar 02, 2025

Certification performed in accordance with "EPA Traceability Protocol for Assay and Certification of Gaseous Calibration Standards (May 2012)" document EPA 600/R-12/531, using the assay procedures listed. Analytical Methodology does not require correction for analytical interference. This cylinder has a total analytical uncertainty as stated below with a confidence level of 95%. There are no significant impurities which affect the use of this calibration mixture. All concentrations are on a volume/volume basis unless otherwise noted.

Do Not Use This Cylinder below 100 psig, i.e. 0.7 megapascals.

ANALYTICAL RESULTS

Component	Requested Concentration	Actual Concentration	Protocol Method	Total Relative Uncertainty	Assay Dates
PROPANE	10.00 PPM	10.07 PPM	G1	+/- 0.7% NIST Traceable	03/02/2017
AIR	Balance				

CALIBRATION STANDARDS

Type	Lot ID	Cylinder No	Concentration	Uncertainty	Expiration Date
NTRM	10061440	CC316745	9.93 PPM PROPANE/AIR	+/- 0.6%	Jun 29, 2022

ANALYTICAL EQUIPMENT

Instrument/Make/Model	Analytical Principle	Last Multipoint Calibration
Nicolet 6700 AHR0801332	FTIR	Feb 23, 2017

Triad Data Available Upon Request

Approved for Release

Airgas
an Air Liquide company

Airgas Specialty Gases
Airgas USA, LLC
12722 S. Wentworth Ave.
Chicago, IL 60628
Airgas.com

CERTIFICATE OF ANALYSIS

Grade of Product: EPA Protocol

Part Number:	E02AI99E15A01H9	Reference Number:	54-401400733-1
Cylinder Number:	CC430551	Cylinder Volume:	146.2 CF
Laboratory:	124 - Chicago (SAP) - IL	Cylinder Pressure:	2015 PSIG
PGVP Number:	B12019	Valve Outlet:	590
Gas Code:	PPN,BALA	Certification Date:	Jan 21, 2019

Expiration Date: Jan 21, 2027

Certification performed in accordance with "EPA Traceability Protocol for Assay and Certification of Gaseous Calibration Standards (May 2012)" document EPA 600/R-12/531, using the assay procedures listed. Analytical Methodology does not require correction for analytical interference. This cylinder has a total analytical uncertainty as stated below with a confidence level of 95%. There are no significant impurities which affect the use of this calibration mixture. All concentrations are on a volume/volume basis unless otherwise noted.

Do Not Use This Cylinder below 100 psig, i.e. 0.7 megapascals.

ANALYTICAL RESULTS

Component	Requested Concentration	Actual Concentration	Protocol Method	Total Relative Uncertainty	Assay Dates
PROPANE	20.00 PPM	20.13 PPM	G1	+/- 0.8% NIST Traceable	01/21/2019
AIR	Balance				

CALIBRATION STANDARDS

Type	Lot ID	Cylinder No	Concentration	Uncertainty	Expiration Date
NTRM	16061106	CC482563	50.06 PPM PROPANE/AIR	+/- 0.5%	Jul 26, 2022

ANALYTICAL EQUIPMENT

Instrument/Make/Model	Analytical Principle	Last Multipoint Calibration
Nicolet 6700 AHR0801332	FTIR	Dec 26, 2018

Triad Data Available Upon Request

Approved for Release

Airgas

Airgas USA, LLC
Airgas Specialty Gases
12722 S. Wentworth Avenue
Chicago, IL 60628
773-785-3000 Fax: 773 785-1928
Airgas.com

CERTIFICATE OF ANALYSIS

Grade of Product: EPA Protocol

Part Number:	E02AI99E15A0705	Reference Number:	54-124563196-1
Cylinder Number:	EB0065467	Cylinder Volume:	146.2 CF
Laboratory:	ASG - Chicago - IL	Cylinder Pressure:	2015 PSIG
PGVP Number:	B12016	Valve Outlet:	590
Gas Code:	PPN,BALA	Certification Date:	Jul 05, 2016

Expiration Date: Jul 05, 2024

Certification performed in accordance with "EPA Traceability Protocol for Assay and Certification of Gaseous Calibration Standards (May 2012)" document EPA 600/R-12/531, using the assay procedures listed. Analytical Methodology does not require correction for analytical interference. This cylinder has a total analytical uncertainty as stated below with a confidence level of 95%. There are no significant impurities which affect the use of this calibration mixture. All concentrations are on a volume/volume basis unless otherwise noted.

Do Not Use This Cylinder below 100 psig, i.e. 0.7 megapascals.

ANALYTICAL RESULTS

Component	Requested Concentration	Actual Concentration	Protocol Method	Total Relative Uncertainty	Assay Dates
PROPANE	30.00 PPM	30.03 PPM	G1	+/- 0.7% NIST Traceable	07/05/2016
AIR	Balance				

CALIBRATION STANDARDS

Type	Lot ID	Cylinder No	Concentration	Uncertainty	Expiration Date
NTRM	13060520	CC417457	50.80 PPM PROPANE/NITROGEN	+/- 0.6%	Feb 26, 2019

ANALYTICAL EQUIPMENT

Instrument/Make/Model	Analytical Principle	Last Multipoint Calibration
Nicolet 6700 AHR0801332	FTIR	Jun 06, 2016

Triad Data Available Upon Request

Approved for Release

Airgas
an Air Liquide company

Airgas Specialty Gases
Airgas USA, LLC
12722 S. Wentworth Ave.
Chicago, IL 60628
Airgas.com

CERTIFICATE OF ANALYSIS

Grade of Product: EPA Protocol

Part Number:	E02AI99E15A1877	Reference Number:	54-401424229-1
Cylinder Number:	ALM-066302	Cylinder Volume:	146.2 CF
Laboratory:	124 - Chicago (SAP) - IL	Cylinder Pressure:	2015 PSIG
PGVP Number:	B12019	Valve Outlet:	590
Gas Code:	PPN,BALA	Certification Date:	Feb 22, 2019

Expiration Date: Feb 22, 2027

Certification performed in accordance with "EPA Traceability Protocol for Assay and Certification of Gaseous Calibration Standards (May 2012)" document EPA 600/R-12/531, using the assay procedures listed. Analytical Methodology does not require correction for analytical interference. This cylinder has a total analytical uncertainty as stated below with a confidence level of 95%. There are no significant impurities which affect the use of this calibration mixture. All concentrations are on a volume/volume basis unless otherwise noted.

Do Not Use This Cylinder below 100 psig, i.e. 0.7 megapascals.

ANALYTICAL RESULTS

Component	Requested Concentration	Actual Concentration	Protocol Method	Total Relative Uncertainty	Assay Dates
PROPANE	80.00 PPM	61.28 PPM	G1	+/- 0.6% NIST Traceable	02/22/2019
AIR	Balance				

CALIBRATION STANDARDS

Type	Lot ID	Cylinder No	Concentration	Uncertainty	Expiration Date
NTRM	16060318	CC471461	99.7 PPM PROPANE/AIR	+/- 0.5%	Nov 16, 2021

ANALYTICAL EQUIPMENT

Instrument/Make/Model	Analytical Principle	Last Multipoint Calibration
Nicolet 6700 AHR0801332	FTIR	Jan 28, 2019

Triad Data Available Upon Request

Approved for Release

Airgas
an Air Liquide company

Airgas Specialty Gases
Airgas USA, LLC
12722 S. Wentworth Ave.
Chicago, IL 60628
Airgas.com

CERTIFICATE OF ANALYSIS

Grade of Product: EPA Protocol

Part Number:	E02AI99E15A0565	Reference Number:	54-401120996-1
Cylinder Number:	CC203587	Cylinder Volume:	146.2 CF
Laboratory:	124 - Chicago (SAP) - IL	Cylinder Pressure:	2015 PSIG
PGVP Number:	B12018	Valve Outlet:	590
Gas Code:	PPN,BALA	Certification Date:	Feb 13, 2018

Expiration Date: Feb 13, 2026

Certification performed in accordance with "EPA Traceability Protocol for Assay and Certification of Gaseous Calibration Standards (May 2012)" document EPA 600/R-12/531, using the assay procedures listed. Analytical Methodology does not require correction for analytical interference. This cylinder has a total analytical uncertainty as stated below with a confidence level of 95%. There are no significant impurities which affect the use of this calibration mixture. All concentrations are on a mole/mole basis unless otherwise noted.

Do Not Use This Cylinder below 100 psig, i.e. 0.7 megapascals.

ANALYTICAL RESULTS

Component	Requested Concentration	Actual Concentration	Protocol Method	Total Relative Uncertainty	Assay Dates
PROPANE	90.00 PPM	91.12 PPM	G1	+/- 0.6% NIST Traceable	02/13/2018
AIR	Balance			-	

CALIBRATION STANDARDS

Type	Lot ID	Cylinder No	Concentration	Uncertainty	Expiration Date
NTRM	16060318	CC471451	99.7 PPM PROPANE/AIR	+/- 0.5%	Nov 16, 2021

ANALYTICAL EQUIPMENT

Instrument/Make/Model	Analytical Principle	Last Multipoint Calibration
Nicolet 6700 AHR0801332	FTIR	Jan 21, 2018

Triad Data Available Upon Request

Signature on file

Approved for Release

Airgas
an Air Liquide company

Airgas Specialty Gases
Airgas USA, LLC
12722 S. Wentworth Ave.
Chicago, IL 60628
Airgas.com

CERTIFICATE OF ANALYSIS

Grade of Product: EPA Protocol

Part Number:	E02AI99E15A0453	Reference Number:	54-401247267-1
Cylinder Number:	CC494386	Cylinder Volume:	146.2 CF
Laboratory:	124 - Chicago (SAP) - IL	Cylinder Pressure:	2015 PSIG
PGVP Number:	B12018	Valve Outlet:	590
Gas Code:	PPN,BALA	Certification Date:	Jul 09, 2018

Expiration Date: Jul 09, 2026

Certification performed in accordance with "EPA Traceability Protocol for Assay and Certification of Gaseous Calibration Standards (May 2012)" document EPA 600/R-12/531, using the assay procedures listed. Analytical Methodology does not require correction for analytical interference. This cylinder has a total analytical uncertainty as stated below with a confidence level of 95%. There are no significant impurities which affect the use of this calibration mixture. All concentrations are on a volume/volume basis unless otherwise noted.

Do Not Use This Cylinder below 100 psig, i.e. 0.7 megapascals.

ANALYTICAL RESULTS

Component	Requested Concentration	Actual Concentration	Protocol Method	Total Relative Uncertainty	Assay Dates
PROPANE	300.0 PPM	301.2 PPM	G1	+/- 0.7% NIST Traceable	07/09/2018
AIR	Balance				

CALIBRATION STANDARDS

Type	Lot ID	Cylinder No	Concentration	Uncertainty	Expiration Date
NTRM	10060532	CC281503	495.3 PPM PROPANE/AIR	+/- 0.5%	Jan 06, 2022

ANALYTICAL EQUIPMENT

Instrument/Make/Model	Analytical Principle	Last Multipoint Calibration
Nicolet 6700 AHR0801332	FTIR	Jun 21, 2018

Triad Data Available Upon Request

Approved for Release

Airgas
an Air Liquide company

Airgas Specialty Gases
Airgas USA, LLC
12722 S. Wentworth Ave.
Chicago, IL 60628
Airgas.com

CERTIFICATE OF ANALYSIS

Grade of Product: EPA Protocol

Part Number:	E02AI99E15A1472	Reference Number:	54-401478396-1
Cylinder Number:	CC486863	Cylinder Volume:	146.3 CF
Laboratory:	124 - Chicago (SAP) - IL	Cylinder Pressure:	2015 PSIG
PGVP Number:	B12019	Valve Outlet:	590
Gas Code:	PPN,BALA	Certification Date:	Apr 15, 2019

Expiration Date: Apr 15, 2027

Certification performed in accordance with "EPA Traceability Protocol for Assay and Certification of Gaseous Calibration Standards (May 2012)" document EPA 600/R-12/531, using the assay procedures listed. Analytical Methodology does not require correction for analytical interference. This cylinder has a total analytical uncertainty as stated below with a confidence level of 95%. There are no significant impurities which affect the use of this calibration mixture. All concentrations are on a volume/volume basis unless otherwise noted.

Do Not Use This Cylinder below 100 psig, i.e. 0.7 megapascals.

ANALYTICAL RESULTS

Component	Requested Concentration	Actual Concentration	Protocol Method	Total Relative Uncertainty	Assay Dates
PROPANE	600.0 PPM	604.3 PPM	G1	+/- 0.8% NIST Traceable	04/15/2019
AIR	Balance				

CALIBRATION STANDARDS

Type	Lot ID	Cylinder No	Concentration	Uncertainty	Expiration Date
NTRM	11060906	CC343399	1000.3 PPM PROPANE/NITROGEN	+/- 0.7%	Mar 15, 2023

ANALYTICAL EQUIPMENT

Instrument/Make/Model	Analytical Principle	Last Multipoint Calibration
Nicolet 6700 AHR0801332	FTIR	Mar 25, 2019

Triad Data Available Upon Request

Approved for Release

Airgas
an Air Liquide company

Airgas Specialty Gases
Airgas USA, LLC
12722 S. Wentworth Ave.
Chicago, IL 60628
Airgas.com

CERTIFICATE OF ANALYSIS

Grade of Product: EPA Protocol

Part Number:	E02AI99E15A0563	Reference Number:	54-401273634-1
Cylinder Number:	SG9163416BAL	Cylinder Volume:	146.3 CF
Laboratory:	124 - Chicago (SAP) - IL	Cylinder Pressure:	2015 PSIG
PGVP Number:	B12018	Valve Outlet:	590
Gas Code:	PPN,BALA	Certification Date:	Aug 06, 2018

Expiration Date: Aug 06, 2026

Certification performed in accordance with "EPA Traceability Protocol for Assay and Certification of Gaseous Calibration Standards (May 2012)" document EPA 600/R-12/531, using the assay procedures listed. Analytical Methodology does not require correction for analytical interference. This cylinder has a total analytical uncertainty as stated below with a confidence level of 95%. There are no significant impurities which affect the use of this calibration mixture. All concentrations are on a volume/volume basis unless otherwise noted.

Do Not Use This Cylinder below 100 psig, i.e. 0.7 megapascals.

ANALYTICAL RESULTS

Component	Requested Concentration	Actual Concentration	Protocol Method	Total Relative Uncertainty	Assay Dates
PROPANE	900.0 PPM	907.6 PPM	G1	+/- 0.7% NIST Traceable	08/06/2018
AIR	Balance				

CALIBRATION STANDARDS

Type	Lot ID	Cylinder No	Concentration	Uncertainty	Expiration Date
NTRM	11060906	CC343399	1000.3 PPM PROPANE/NITROGEN	+/- 0.7%	Mar 15, 2023

ANALYTICAL EQUIPMENT

Instrument/Make/Model	Analytical Principle	Last Multipoint Calibration
Nicolet 6700 AHR0801332	FTIR	Jul 23, 2018

Triad Data Available Upon Request

Approved for Release

Airgas
an Air Liquide company

Airgas Specialty Gases
Airgas USA, LLC
12722 S. Wentworth Ave.
Chicago, IL 60628
Airgas.com

CERTIFICATE OF ANALYSIS

Grade of Product: EPA Protocol

Part Number:	E02AI99E15A0966	Reference Number:	54-401628249-1
Cylinder Number:	EB0039361	Cylinder Volume:	146.3 CF
Laboratory:	124 - Chicago (SAP) - IL	Cylinder Pressure:	2015 PSIG
PGVP Number:	B12019	Valve Outlet:	590
Gas Code:	PPN,BALA	Certification Date:	Oct 21, 2019

Expiration Date: Oct 21, 2027

Certification performed in accordance with "EPA Traceability Protocol for Assay and Certification of Gaseous Calibration Standards (May 2012)" document EPA 600/R-12/531, using the assay procedures listed. Analytical Methodology does not require correction for analytical interference. This cylinder has a total analytical uncertainty as stated below with a confidence level of 95%. There are no significant impurities which affect the use of this calibration mixture. All concentrations are on a volume/volume basis unless otherwise noted.

Do Not Use This Cylinder below 100 psig, i.e. 0.7 megapascals.

ANALYTICAL RESULTS

Component	Requested Concentration	Actual Concentration	Protocol Method	Total Relative Uncertainty	Assay Dates
PROPANE	1500 PPM	1460 PPM	G1	+/- 0.7% NIST Traceable	10/21/2019
AIR	Balance				

CALIBRATION STANDARDS

Type	Lot ID	Cylinder No	Concentration	Uncertainty	Expiration Date
NTRM	00011612	K026026	2515 PPM PROPANE/NITROGEN	+/- 0.6%	May 09, 2024

ANALYTICAL EQUIPMENT

Instrument/Make/Model	Analytical Principle	Last Multipoint Calibration
Nicolet 6700 AHR0801332	FTIR	Sep 27, 2019

Triad Data Available Upon Request

Approved for Release

Airgas
an Air Liquide company

Airgas Specialty Gases
Airgas USA, LLC
12722 S. Wentworth Ave.
Chicago, IL 60628
Airgas.com

CERTIFICATE OF ANALYSIS

Grade of Product: EPA Protocol

Part Number:	E02AI99E15A0452	Reference Number:	54-124604145-1
Cylinder Number:	CC476181	Cylinder Volume:	146.5 CF
Laboratory:	124 - Chicago - IL	Cylinder Pressure:	2015 PSIG
PGVP Number:	B12017	Valve Outlet:	590
Gas Code:	PR,BALA	Certification Date:	Mar 04, 2017

Expiration Date: Mar 04, 2025

Certification performed in accordance with "EPA Traceability Protocol for Assay and Certification of Gaseous Calibration Standards (May 2012)" document EPA 600/R-12/531, using the assay procedures listed. Analytical Methodology does not require correction for analytical interference. This cylinder has a total analytical uncertainty as stated below with a confidence level of 95%. There are no significant impurities which affect the use of this calibration mixture. All concentrations are on a volume/volume basis unless otherwise noted.

Do Not Use This Cylinder below 100 psig, i.e. 0.7 megapascals.

ANALYTICAL RESULTS

Component	Requested Concentration	Actual Concentration	Protocol Method	Total Relative Uncertainty	Assay Dates
PROPANE	3000 PPM	2942 PPM	G1	+/- 0.7% NIST Traceable	03/04/2017
AIR	Balance				

CALIBRATION STANDARDS

Type	Lot ID	Cylinder No	Concentration	Uncertainty	Expiration Date
NTRM	12061208	CC357634	5026 PPM PROPANE/NITROGEN	+/- 0.6%	Jan 20, 2018

ANALYTICAL EQUIPMENT

Instrument/Make/Model	Analytical Principle	Last Multipoint Calibration
Nicolet 6700 AHR0801332	FTIR	Feb 23, 2017

Triad Data Available Upon Request

Approved for Release

Airgas
an Air Liquide company

Airgas Specialty Gases
Airgas USA, LLC
12722 S. Wentworth Ave.
Chicago, IL 60628
Airgas.com

CERTIFICATE OF ANALYSIS

Grade of Product: EPA Protocol

Part Number:	E02AI99E15A1883	Reference Number:	54-124604145-8
Cylinder Number:	CC208736	Cylinder Volume:	115.9 CF
Laboratory:	124 - Chicago - IL	Cylinder Pressure:	1580 PSIG
PGVP Number:	B12017	Valve Outlet:	590
Gas Code:	PPN,BALA	Certification Date:	Mar 04, 2017

Expiration Date: Mar 04, 2025

Certification performed in accordance with "EPA Traceability Protocol for Assay and Certification of Gaseous Calibration Standards (May 2012)" document EPA 600/R-12/531, using the assay procedures listed. Analytical Methodology does not require correction for analytical interference. This cylinder has a total analytical uncertainty as stated below with a confidence level of 95%. There are no significant impurities which affect the use of this calibration mixture. All concentrations are on a volume/volume basis unless otherwise noted.

Do Not Use This Cylinder below 100 psig, i.e. 0.7 megapascals.

ANALYTICAL RESULTS

Component	Requested Concentration	Actual Concentration	Protocol Method	Total Relative Uncertainty	Assay Dates
PROPANE	4500 PPM	4522 PPM	G1	+/- 0.6% NIST Traceable	03/04/2017
AIR	Balance				

CALIBRATION STANDARDS

Type	Lot ID	Cylinder No	Concentration	Uncertainty	Expiration Date
NTRM	12061208	CC357634	5026 PPM PROPANE/NITROGEN	+/- 0.6%	Jan 20, 2018

ANALYTICAL EQUIPMENT

Instrument/Make/Model	Analytical Principle	Last Multipoint Calibration
Nicolet 6700 AHR0801332	FTIR	Feb 23, 2017

Triad Data Available Upon Request

Approved for Release

Airgas
an Air Liquide company

Airgas Specialty Gases
Airgas USA, LLC
12722 S. Wentworth Ave.
Chicago, IL 60628
Airgas.com

CERTIFICATE OF ANALYSIS

Grade of Product: EPA Protocol

Part Number:	E03NI80E15A0138	Reference Number:	54-401553801-1
Cylinder Number:	CC352366	Cylinder Volume:	150.9 CF
Laboratory:	124 - Chicago (SAP) - IL	Cylinder Pressure:	2015 PSIG
PGVP Number:	B12019	Valve Outlet:	590
Gas Code:	CO2,O2,BALN	Certification Date:	Aug 06, 2019

Expiration Date: Aug 06, 2027

Certification performed in accordance with "EPA Traceability Protocol for Assay and Certification of Gaseous Calibration Standards (May 2012)" document EPA 600/R-12/531, using the assay procedures listed. Analytical Methodology does not require correction for analytical interference. This cylinder has a total analytical uncertainty as stated below with a confidence level of 95%. There are no significant impurities which affect the use of this calibration mixture. All concentrations are on a volume/volume basis unless otherwise noted.

Do Not Use This Cylinder below 100 psig, i.e. 0.7 megapascals.

ANALYTICAL RESULTS

Component	Requested Concentration	Actual Concentration	Protocol Method	Total Relative Uncertainty	Assay Dates
CARBON DIOXIDE	10.00 %	9.882 %	G1	+/- 1.0% NIST Traceable	08/06/2019
OXYGEN	10.00 %	10.09 %	G1	+/- 1.0% NIST Traceable	08/06/2019
NITROGEN	Balance				

CALIBRATION STANDARDS

Type	Lot ID	Cylinder No	Concentration	Uncertainty	Expiration Date
NTRM	08010607	K003900	13.94 % CARBON DIOXIDE/NITROGEN	+/- 0.57	Jan 30, 2024
NTRM	98051019	SG9168269BAL	12.05 % OXYGEN/NITROGEN	+/- 0.7%	Dec 14, 2023

ANALYTICAL EQUIPMENT

Instrument/Make/Model	Analytical Principle	Last Multipoint Calibration
CO2-1 HORIBA VIA-510 V1E3H7P5	NDIR	Jul 08, 2019
O2-1 HORIBA MPA-510 3VUYL9NR	Paramagnetic	Aug 05, 2019

Triad Data Available Upon Request

Approved for Release

CERTIFICATE OF ANALYSIS

Grade of Product: EPA Protocol

Part Number:	E03NI59E15A3452	Reference Number:	54-124579079-4
Cylinder Number:	CC191078	Cylinder Volume:	159.0 CF
Laboratory:	124 - Chicago - IL	Cylinder Pressure:	2015 PSIG
PGVP Number:	B12016	Valve Outlet:	590
Gas Code:	CO2,O2,BALN	Certification Date:	Sep 26, 2016

Expiration Date: Sep 26, 2024

Certification performed in accordance with "EPA Traceability Protocol for Assay and Certification of Gaseous Calibration Standards (May 2012)" document EPA 600/R-12/531, using the assay procedures listed. Analytical Methodology does not require correction for analytical interference. This cylinder has a total analytical uncertainty as stated below with a confidence level of 95%. There are no significant impurities which affect the use of this calibration mixture. All concentrations are on a volume/volume basis unless otherwise noted.

Do Not Use This Cylinder below 100 psig, i.e. 0.7 megapascals.

ANALYTICAL RESULTS

Component	Requested Concentration	Actual Concentration	Protocol Method	Total Relative Uncertainty	Assay Dates
CARBON DIOXIDE	19.00 %	18.60 %	G1	+/- 1.0% NIST Traceable	09/26/2016
OXYGEN	22.00 %	21.76 %	G1	+/- 1.1% NIST Traceable	09/26/2016
NITROGEN	Balance				

CALIBRATION STANDARDS

Type	Lot ID	Cylinder No	Concentration	Uncertainty	Expiration Date
NTRM	13060709	CC413602	16.939 % CARBON DIOXIDE/NITROGEN	+/- 0.6%	May 08, 2019
NTRM	12062016	CC367570	22.88 % OXYGEN/NITROGEN	+/- 0.2%	Apr 24, 2018

ANALYTICAL EQUIPMENT

Instrument/Make/Model	Analytical Principle	Last Multipoint Calibration
CO2-1 HORIBA VIA-510 V1E3H7P5	NDIR	Sep 21, 2016
O2-1 HORIBA MPA-510 3VUYL9NR	Paramagnetic	Sep 23, 2016

Triad Data Available Upon Request

Signature on file

Approved for Release

Airgas
an Air Liquide company

Airgas USA, LLC
525 North Industrial Loop Road
Tooele, UT 84074
Airgas.com

CERTIFICATE OF ANALYSIS

Grade of Product: EPA Protocol

Part Number:	E03NI80E80A7767	Reference Number:	153-401591108-1
Cylinder Number:	ET0006082	Cylinder Volume:	87.4 CF
Laboratory:	124 - Tooele (SAP) - UT	Cylinder Pressure:	2214 PSIG
PGVP Number:	B72019	Valve Outlet:	590
Gas Code:	CO2,O2,BALN	Certification Date:	Sep 09, 2019

Expiration Date: Sep 09, 2027

Certification performed in accordance with "EPA Traceability Protocol for Assay and Certification of Gaseous Calibration Standards (May 2012)" document EPA 600/R-12/531, using the assay procedures listed. Analytical Methodology does not require correction for analytical interference. This cylinder has a total analytical uncertainty as stated below with a confidence level of 95%. There are no significant impurities which affect the use of this calibration mixture. All concentrations are on a volume/volume basis unless otherwise noted.

Do Not Use This Cylinder below 100 psig, i.e. 0.7 megapascals.

ANALYTICAL RESULTS

Component	Requested Concentration	Actual Concentration	Protocol Method	Total Relative Uncertainty	Assay Dates
CARBON DIOXIDE	10.00 %	9.936 %	G1	+/- 0.8% NIST Traceable	09/09/2019
OXYGEN	10.00 %	9.993 %	G1	+/- 0.4% NIST Traceable	09/09/2019
NITROGEN	Balance				

CALIBRATION STANDARDS

Type	Lot ID	Cylinder No	Concentration	Uncertainty	Expiration Date
NTRM	13060628	CC413727	13.359 % CARBON DIOXIDE/NITROGEN	0.6%	May 14, 2025
NTRM	09060238	CC263127	9.961 % OXYGEN/NITROGEN	0.3%	Nov 05, 2024

ANALYTICAL EQUIPMENT

Instrument/Make/Model	Analytical Principle	Last Multipoint Calibration
Horiba VIA-510 SV4MEUTJ CO2	CO2 NDIR (Dixon)	Sep 06, 2019
Horiba MPA-510 W603MM58 O2	O2 Paramagnetic (Mason)	Sep 05, 2019

Triad Data Available Upon Request

Approved for Release

Airgas
an Air Liquide company

Airgas Specialty Gases
Airgas USA, LLC
12722 S. Wentworth Ave.
Chicago, IL 60628
Airgas.com

CERTIFICATE OF ANALYSIS

Grade of Product: EPA Protocol

Part Number:	E03NI62E80A0014	Reference Number:	54-401522587-1
Cylinder Number:	XL361318B	Cylinder Volume:	92.2 CF
Laboratory:	124 - Chicago (SAP) - IL	Cylinder Pressure:	2214 PSIG
PGVP Number:	B12019	Valve Outlet:	590
Gas Code:	CO2,O2,BALN	Certification Date:	Jun 14, 2019

Expiration Date: Jun 14, 2027

Certification performed in accordance with "EPA Traceability Protocol for Assay and Certification of Gaseous Calibration Standards (May 2012)" document EPA 600/R-12/531, using the assay procedures listed. Analytical Methodology does not require correction for analytical interference. This cylinder has a total analytical uncertainty as stated below with a confidence level of 95%. There are no significant impurities which affect the use of this calibration mixture. All concentrations are on a volume/volume basis unless otherwise noted.

Do Not Use This Cylinder below 100 psig, i.e. 0.7 megapascals.

ANALYTICAL RESULTS

Component	Requested Concentration	Actual Concentration	Protocol Method	Total Relative Uncertainty	Assay Dates
CARBON DIOXIDE	19.00 %	18.72 %	G1	+/- 0.6% NIST Traceable	06/14/2019
OXYGEN	19.00 %	19.42 %	G1	+/- 0.6% NIST Traceable	06/14/2019
NITROGEN	Balance				

CALIBRATION STANDARDS

Type	Lot ID	Cylinder No	Concentration	Uncertainty	Expiration Date
NTRM	060118	K008299	23.04 % CARBON DIOXIDE/NITROGEN	+/- 0.5%	Jun 27, 2022
NTRM	15010420	K027067	22.454 % OXYGEN/NITROGEN	+/- 0.2%	Aug 05, 2021

ANALYTICAL EQUIPMENT

Instrument/Make/Model	Analytical Principle	Last Multipoint Calibration
CO2-1 HORIBA VIA-510 V1E3H7P5	NDIR	Jun 03, 2019
O2-1 HORIBA MPA-510 3VUYL9NR	Paramagnetic	May 25, 2019

Triad Data Available Upon Request

Approved for Release

Airgas
an Air Liquide company

Airgas Specialty Gases
Airgas USA, LLC
12722 S. Wentworth Ave.
Chicago, IL 60628
Airgas.com

CERTIFICATE OF ANALYSIS

Grade of Product: EPA Protocol

Part Number:	E02NI80E15A3290	Reference Number:	54-124607465-3
Cylinder Number:	CC238024	Cylinder Volume:	146.1 CF
Laboratory:	124 - Chicago (SAP) - IL	Cylinder Pressure:	2015 PSIG
PGVP Number:	B12017	Valve Outlet:	590
Gas Code:	O2,BALN	Certification Date:	Mar 08, 2017

Expiration Date: Mar 08, 2025

Certification performed in accordance with "EPA Traceability Protocol for Assay and Certification of Gaseous Calibration Standards (May 2012)" document EPA 600/R-12/531, using the assay procedures listed. Analytical Methodology does not require correction for analytical interference. This cylinder has a total analytical uncertainty as stated below with a confidence level of 95%. There are no significant impurities which affect the use of this calibration mixture. All concentrations are on a volume/volume basis unless otherwise noted.

Do Not Use This Cylinder below 100 psig, i.e. 0.7 megapascals.

ANALYTICAL RESULTS

Component	Requested Concentration	Actual Concentration	Protocol Method	Total Relative Uncertainty	Assay Dates
OXYGEN	20.00 %	20.73 %	G1	+/- 0.7% NIST Traceable	03/08/2017
NITROGEN	Balance			-	

CALIBRATION STANDARDS

Type	Lot ID	Cylinder No	Concentration	Uncertainty	Expiration Date
NTRM	12062017	CC367575	22.88 % OXYGEN/NITROGEN	+/- 0.2%	Apr 24, 2018

ANALYTICAL EQUIPMENT

Instrument/Make/Model	Analytical Principle	Last Multipoint Calibration
O2-1 HORIBA MPA-510 3VUYL9NR	Paramagnetic	Mar 03, 2017

Triad Data Available Upon Request

Signature on file

Approved for Release

Airgas

Airgas Specialty Gases
12722 South Wentworth Avenue
Chicago, IL 60628
(773) 785-3000 Fax: (773) 785-1928
www.airgas.com

CERTIFICATE OF ANALYSIS
Grade of Product: EPA Protocol

Part Number:	E02AI99E15A0444	Reference Number:	54-124448886-2
Cylinder Number:	XC006413B	Cylinder Volume:	146.2 CF
Laboratory:	ASG - Chicago - IL	Cylinder Pressure:	2015 PSIG
PGVP Number:	B12014	Valve Outlet:	590
Gas Code:	CH4,BALA	Certification Date:	Aug 18, 2014

Expiration Date: Aug 18, 2022

Certification performed in accordance with "EPA Traceability Protocol for Assay and Certification of Gaseous Calibration Standards (May 2012)" document EPA 600/R-12/531, using the assay procedures listed. Analytical Methodology does not require correction for analytical interference. This cylinder has a total analytical uncertainty as stated below with a confidence level of 95%. There are no significant impurities which affect the use of this calibration mixture. All concentrations are on a volume/volume basis unless otherwise noted.

Do Not Use This Cylinder below 100 psig, i.e. 0.7 megapascals.

ANALYTICAL RESULTS

Component	Requested Concentration	Actual Concentration	Protocol Method	Total Relative Uncertainty	Assay Dates
METHANE	3.000 PPM	2.936 PPM	G1	+/- 1.0% NIST Traceable	08/18/2014
AIR	Balance				

CALIBRATION STANDARDS

Type	Lot ID	Cylinder No	Concentration	Uncertainty	Expiration Date
NTRM	07060504	CC207991	10.0 PPM METHANE/AIR	+/- 0.8%	Apr 27, 2017

ANALYTICAL EQUIPMENT

Instrument/Make/Model	Analytical Principle	Last Multipoint Calibration
Nicolet 6700 AHR0801332	FTIR	Jul 25, 2014

Triad Data Available Upon Request

Approved for Release

Airgas Specialty Gases
Airgas USA, LLC
12722 S. Wentworth Ave.
Chicago, IL 60628
Airgas.com

CERTIFICATE OF ANALYSIS

Grade of Product: EPA Protocol

Part Number:	E02AI99E15A02S3	Reference Number:	54-401521820-1
Cylinder Number:	CC422024	Cylinder Volume:	146.0 CF
Laboratory:	124 - Chicago (SAP) - IL	Cylinder Pressure:	2015 PSIG
PGVP Number:	B12019	Valve Outlet:	590
Gas Code:	CH4,BALA	Certification Date:	Jun 18, 2019

Expiration Date: Jun 18, 2027

Certification performed in accordance with "EPA Traceability Protocol for Assay and Certification of Gaseous Calibration Standards (May 2012)" document EPA 600/R-12/531, using the assay procedures listed. Analytical Methodology does not require correction for analytical interference. This cylinder has a total analytical uncertainty as stated below with a confidence level of 95%. There are no significant impurities which affect the use of this calibration mixture. All concentrations are on a volume/volume basis unless otherwise noted.

Do Not Use This Cylinder below 100 psig, i.e. 0.7 megapascals.

ANALYTICAL RESULTS

Component	Requested Concentration	Actual Concentration	Protocol Method	Total Relative Uncertainty	Assay Dates
METHANE	6.000 PPM	5.934 PPM	G1	+/- 1.0% NIST Traceable	06/18/2019
AIR	Balance			-	

CALIBRATION STANDARDS

Type	Lot ID	Cylinder No	Concentration	Uncertainty	Expiration Date
NTRM	01011114	ALM044579	9.92 PPM METHANE/AIR	+/- 0.8%	Jun 26, 2019

ANALYTICAL EQUIPMENT

Instrument/Make/Model	Analytical Principle	Last Multipoint Calibration
Nicolet 6700 AHR0801332	FTIR	May 28, 2019

Triad Data Available Upon Request

Signature on file

Approved for Release

Airgas
an Air Liquide company

Airgas Specialty Gases
Airgas USA, LLC
12722 S. Wentworth Ave.
Chicago, IL 60628
Airgas.com

CERTIFICATE OF ANALYSIS

Grade of Product: EPA Protocol

Part Number:	E03AI99E15A0006	Reference Number:	54-401314952-1
Cylinder Number:	CC6478	Cylinder Volume:	146.2 CF
Laboratory:	124 - Chicago (SAP) - IL	Cylinder Pressure:	2015 PSIG
PGVP Number:	B12018	Valve Outlet:	590
Gas Code:	CH4,PPN,BALA	Certification Date:	Oct 03, 2018

Expiration Date: Oct 03, 2026

Certification performed in accordance with "EPA Traceability Protocol for Assay and Certification of Gaseous Calibration Standards (May 2012)" document EPA 600/R-12/531, using the assay procedures listed. Analytical Methodology does not require correction for analytical interference. This cylinder has a total analytical uncertainty as stated below with a confidence level of 95%. There are no significant impurities which affect the use of this calibration mixture. All concentrations are on a volume/volume basis unless otherwise noted.

Do Not Use This Cylinder below 100 psig, i.e. 0.7 megapascals.

ANALYTICAL RESULTS

Component	Requested Concentration	Actual Concentration	Protocol Method	Total Relative Uncertainty	Assay Dates
METHANE	9.000 PPM	8.779 PPM	G1	+/- 1% NIST Traceable	10/03/2018
PROPANE	9.000 PPM	8.940 PPM	G1	+/- 1% NIST Traceable	10/03/2018
AIR	Balance				

CALIBRATION STANDARDS

Type	Lot ID	Cylinder No	Concentration	Uncertainty	Expiration Date
NTRM	01011114	ALM044579	9.92 PPM METHANE/AIR	+/- 0.8%	Jun 26, 2019
NTRM	10061440	CC316745	9.93 PPM PROPANE/AIR	+/- 0.6%	Jun 29, 2022

ANALYTICAL EQUIPMENT

Instrument/Make/Model	Analytical Principle	Last Multipoint Calibration
MKS Multigas 17707558	FTIR	Sep 11, 2018
MKS Multigas 17707558	FTIR	Sep 11, 2018

Triad Data Available Upon Request

Approved for Release

Airgas
an Air Liquide company

Airgas Specialty Gases
Airgas USA, LLC
12722 S. Wentworth Ave.
Chicago, IL 60628
Airgas.com

CERTIFICATE OF ANALYSIS

Grade of Product: CERTIFIED STANDARD-SPEC

Part Number:	X02NI99C15A3LE9	Reference Number:	54-401653288-1
Cylinder Number:	SG9197019BAL	Cylinder Volume:	144.3 CF
Laboratory:	124 - Chicago (SAP) - IL	Cylinder Pressure:	2015 PSIG
Analysis Date:	Nov 12, 2019	Valve Outlet:	350
Lot Number:	54-401653288-1		

Expiration Date: Nov 12, 2022

Product composition verified by direct comparison to calibration standards traceable to N.I.S.T. weights and/or N.I.S.T. Gas Mixture reference materials.

ANALYTICAL RESULTS

Component	Req Conc	Actual Concentration (Mole %)	Analytical Uncertainty
ETHANE	15.00 PPM	16.29 PPM	+/- 5%
NITROGEN	Balance		

Approved for Release

Airgas
an Air Liquide company

Airgas Specialty Gases
Airgas USA, LLC
12722 S. Wentworth Ave.
Chicago, IL 60628
Airgas.com

CERTIFICATE OF ANALYSIS

Grade of Product: CERTIFIED STANDARD-SPEC

Part Number:	X02NI99C15A07M3	Reference Number:	54-401653289-1
Cylinder Number:	CC156978	Cylinder Volume:	144.3 CF
Laboratory:	124 - Chicago (SAP) - IL	Cylinder Pressure:	2015 PSIG
Analysis Date:	Nov 12, 2019	Valve Outlet:	350
Lot Number:	54-401653289-1		

Expiration Date: Nov 12, 2027

Product composition verified by direct comparison to calibration standards traceable to N.I.S.T. weights and/or N.I.S.T. Gas Mixture reference materials.

ANALYTICAL RESULTS

Component	Req Conc	Actual Concentration (Mole %)	Analytical Uncertainty
ETHANE	25.00 PPM	25.74 PPM	+/- 5%
NITROGEN	Balance		

Approved for Release

Airgas
an Air Liquide company

Airgas Specialty Gases
Airgas USA, LLC
12722 S. Wentworth Ave.
Chicago, IL 60628
Airgas.com

CERTIFICATE OF ANALYSIS

Grade of Product: CERTIFIED STANDARD-SPEC

Part Number:	X02NI99C15A08U9	Reference Number:	54-401653290-1
Cylinder Number:	SG9170686BAL	Cylinder Volume:	144.4 CF
Laboratory:	124 - Chicago (SAP) - IL	Cylinder Pressure:	2015 PSIG
Analysis Date:	Nov 12, 2019	Valve Outlet:	350
Lot Number:	54-401653290-1		

Expiration Date: Nov 12, 2022

Product composition verified by direct comparison to calibration standards traceable to N.I.S.T. weights and/or N.I.S.T. Gas Mixture reference materials.

ANALYTICAL RESULTS

Component	Req Conc	Actual Concentration (Mole %)	Analytical Uncertainty
ETHANE	42.50 PPM	42.67 PPM	+/- 5%
NITROGEN	Balance		

Approved for Release

END OF THE REPORT

RK & Associates, Inc.

Emissions Test Report
RTO VOM Destruction Efficiency
GII, LLC
IEPA Site ID.: 031600BTB

GII, LLC
1909 NORTH CLIFTON AVENUE
CHICAGO, ILLINOIS 60614

JANUARY 2020

APPENDIX B

RTO COMBUSTION CHAMBER TEMPERATURE DATA

RTO Combustion Chamber Temperature Data - VOM Destruction Efficiency Testing
GII, LLC Chicago Ilinois

11-15-19
Run 1
VOID

Time:
10:33 AM - 13:18 AM

Time	RTO Temp 0 - 2000F
Fri Nov 15 2019 10:33:04.4060	1768
Fri Nov 15 2019 10:33:14.4060	1765
Fri Nov 15 2019 10:33:24.4060	1761
Fri Nov 15 2019 10:33:34.4060	1759
Fri Nov 15 2019 10:33:44.4060	1757
Fri Nov 15 2019 10:33:54.4060	1759
Fri Nov 15 2019 10:34:04.4060	1758
Fri Nov 15 2019 10:34:14.4060	1755
Fri Nov 15 2019 10:34:24.4060	1750
Fri Nov 15 2019 10:34:34.4060	1746
Fri Nov 15 2019 10:34:44.4060	1742
Fri Nov 15 2019 10:34:54.4060	1745
Fri Nov 15 2019 10:35:04.4060	1750
Fri Nov 15 2019 10:35:14.4060	1754
Fri Nov 15 2019 10:35:24.4060	1756
Fri Nov 15 2019 10:35:34.4060	1756
Fri Nov 15 2019 10:35:44.4060	1755
Fri Nov 15 2019 10:35:54.4060	1753
Fri Nov 15 2019 10:36:04.4060	1750
Fri Nov 15 2019 10:36:14.4060	1747
Fri Nov 15 2019 10:36:24.4060	1743
Fri Nov 15 2019 10:36:34.4060	1740
Fri Nov 15 2019 10:36:44.4060	1742
Fri Nov 15 2019 10:36:54.4060	1740
Fri Nov 15 2019 10:37:04.4060	1732
Fri Nov 15 2019 10:37:14.4060	1722
Fri Nov 15 2019 10:37:24.4060	1715
Fri Nov 15 2019 10:37:34.4060	1707
Fri Nov 15 2019 10:37:44.4060	1700
Fri Nov 15 2019 10:37:54.4060	1714
Fri Nov 15 2019 10:38:04.4060	1741
Fri Nov 15 2019 10:38:14.4060	1767
Fri Nov 15 2019 10:38:24.4060	1785
Fri Nov 15 2019 10:38:34.4060	1795
Fri Nov 15 2019 10:38:44.4060	1796
Fri Nov 15 2019 10:38:54.4060	1797
Fri Nov 15 2019 10:39:04.4060	1798
Fri Nov 15 2019 10:39:14.4060	1799
Fri Nov 15 2019 10:39:24.4060	1801
Fri Nov 15 2019 10:39:34.4060	1800
Fri Nov 15 2019 10:39:44.4060	1800
Fri Nov 15 2019 10:39:54.4060	1799
Fri Nov 15 2019 10:40:04.4060	1796
Fri Nov 15 2019 10:40:14.4060	1793
Fri Nov 15 2019 10:40:24.4060	1790
Fri Nov 15 2019 10:40:34.4060	1787
Fri Nov 15 2019 10:40:44.4060	1785
Fri Nov 15 2019 10:40:54.4060	1788
Fri Nov 15 2019 10:41:04.4060	1794
Fri Nov 15 2019 10:41:14.4060	1797
Fri Nov 15 2019 10:41:24.4060	1797
Fri Nov 15 2019 10:41:34.4060	1797
Fri Nov 15 2019 10:41:44.4060	1795
Fri Nov 15 2019 10:41:54.4060	1792
Fri Nov 15 2019 10:42:04.4060	1789
Fri Nov 15 2019 10:42:14.4060	1785
Fri Nov 15 2019 10:42:24.4060	1781
Fri Nov 15 2019 10:42:34.4060	1776
Fri Nov 15 2019 10:42:44.4060	1771
Fri Nov 15 2019 10:42:54.4060	1765
Fri Nov 15 2019 10:43:04.4060	1758
Fri Nov 15 2019 10:43:14.4060	1752
Fri Nov 15 2019 10:43:24.4060	1746
Fri Nov 15 2019 10:43:34.4060	1739
Fri Nov 15 2019 10:43:44.4060	1732
Fri Nov 15 2019 10:43:54.4060	1747
Fri Nov 15 2019 10:44:04.4060	1773
Fri Nov 15 2019 10:44:14.4060	1792
Fri Nov 15 2019 10:44:24.4060	1801
Fri Nov 15 2019 10:44:34.4060	1805
Fri Nov 15 2019 10:44:44.4060	1807
Fri Nov 15 2019 10:44:54.4060	1808
Fri Nov 15 2019 10:45:04.4060	1809
Fri Nov 15 2019 10:45:14.4060	1809
Fri Nov 15 2019 10:45:24.4060	1806
Fri Nov 15 2019 10:45:34.4060	1802
Fri Nov 15 2019 10:45:44.4060	1796
Fri Nov 15 2019 10:45:54.4060	1789
Fri Nov 15 2019 10:46:04.4060	1782
Fri Nov 15 2019 10:46:14.4060	1776
Fri Nov 15 2019 10:46:24.4060	1770
Fri Nov 15 2019 10:46:34.4060	1767
Fri Nov 15 2019 10:46:44.4060	1766
Fri Nov 15 2019 10:46:54.4060	1772
Fri Nov 15 2019 10:47:04.4060	1780
Fri Nov 15 2019 10:47:14.4060	1785
Fri Nov 15 2019 10:47:24.4060	1789
Fri Nov 15 2019 10:47:34.4060	1791
Fri Nov 15 2019 10:47:44.4060	1792
Fri Nov 15 2019 10:47:54.4060	1792
Fri Nov 15 2019 10:48:04.4060	1792
Fri Nov 15 2019 10:48:14.4060	1791
Fri Nov 15 2019 10:48:24.4060	1790
Fri Nov 15 2019 10:48:34.4060	1787
Fri Nov 15 2019 10:48:44.4060	1784
Fri Nov 15 2019 10:48:54.4060	1780
Fri Nov 15 2019 10:49:04.4060	1775
Fri Nov 15 2019 10:49:14.4060	1770
Fri Nov 15 2019 10:49:24.4060	1764
Fri Nov 15 2019 10:49:34.4060	1757
Fri Nov 15 2019 10:49:44.4060	1752
Fri Nov 15 2019 10:49:54.4060	1765
Fri Nov 15 2019 10:50:04.4060	1785
Fri Nov 15 2019 10:50:14.4060	1797
Fri Nov 15 2019 10:50:24.4060	1801
Fri Nov 15 2019 10:50:34.4060	1803
Fri Nov 15 2019 10:50:44.4060	1803

RTO Combustion Chamber Temperature Data - VOM Destruction Efficiency Testing
GII, LLC Chicago Ilinois

Time	RTO Temp 0 - 2000F
Fri Nov 15 2019 10:50:54.4060	1802
Fri Nov 15 2019 10:51:04.4060	1801
Fri Nov 15 2019 10:51:14.4060	1799
Fri Nov 15 2019 10:51:24.4060	1795
Fri Nov 15 2019 10:51:34.4060	1791
Fri Nov 15 2019 10:51:44.4060	1786
Fri Nov 15 2019 10:51:54.4060	1780
Fri Nov 15 2019 10:52:04.4060	1774
Fri Nov 15 2019 10:52:14.4060	1768
Fri Nov 15 2019 10:52:24.4060	1760
Fri Nov 15 2019 10:52:34.4060	1755
Fri Nov 15 2019 10:52:44.4060	1752
Fri Nov 15 2019 10:52:54.4060	1757
Fri Nov 15 2019 10:53:04.4060	1765
Fri Nov 15 2019 10:53:14.4060	1771
Fri Nov 15 2019 10:53:24.4060	1775
Fri Nov 15 2019 10:53:34.4060	1777
Fri Nov 15 2019 10:53:44.4060	1778
Fri Nov 15 2019 10:53:54.4060	1779
Fri Nov 15 2019 10:54:04.4060	1780
Fri Nov 15 2019 10:54:14.4060	1779
Fri Nov 15 2019 10:54:24.4060	1778
Fri Nov 15 2019 10:54:34.4060	1776
Fri Nov 15 2019 10:54:44.4060	1773
Fri Nov 15 2019 10:54:54.4060	1769
Fri Nov 15 2019 10:55:04.4060	1765
Fri Nov 15 2019 10:55:14.4060	1761
Fri Nov 15 2019 10:55:24.4060	1759
Fri Nov 15 2019 10:55:34.4060	1754
Fri Nov 15 2019 10:55:44.4060	1749
Fri Nov 15 2019 10:55:54.4060	1760
Fri Nov 15 2019 10:56:04.4060	1778
Fri Nov 15 2019 10:56:14.4060	1790
Fri Nov 15 2019 10:56:24.4060	1796
Fri Nov 15 2019 10:56:34.4060	1799
Fri Nov 15 2019 10:56:44.4060	1799
Fri Nov 15 2019 10:56:54.4060	1799
Fri Nov 15 2019 10:57:04.4060	1797
Fri Nov 15 2019 10:57:14.4060	1793
Fri Nov 15 2019 10:57:24.4060	1788
Fri Nov 15 2019 10:57:34.4060	1785
Fri Nov 15 2019 10:57:44.4060	1785
Fri Nov 15 2019 10:57:54.4060	1785
Fri Nov 15 2019 10:58:04.4060	1780
Fri Nov 15 2019 10:58:14.4060	1771
Fri Nov 15 2019 10:58:24.4060	1760
Fri Nov 15 2019 10:58:34.4060	1753
Fri Nov 15 2019 10:58:44.4060	1749
Fri Nov 15 2019 10:58:54.4060	1755
Fri Nov 15 2019 10:59:04.4060	1764
Fri Nov 15 2019 10:59:14.4060	1770
Fri Nov 15 2019 10:59:24.4060	1774
Fri Nov 15 2019 10:59:34.4060	1776
Fri Nov 15 2019 10:59:44.4060	1777
Fri Nov 15 2019 10:59:54.4060	1777
Fri Nov 15 2019 11:00:04.4060	1777
Fri Nov 15 2019 11:00:14.4060	1777
Fri Nov 15 2019 11:00:24.4060	1775
Fri Nov 15 2019 11:00:34.4060	1773
Fri Nov 15 2019 11:00:44.4060	1771
Fri Nov 15 2019 11:00:54.4060	1768
Fri Nov 15 2019 11:01:04.4060	1765
Fri Nov 15 2019 11:01:14.4060	1761
Fri Nov 15 2019 11:01:24.4060	1758
Fri Nov 15 2019 11:01:34.4060	1753
Fri Nov 15 2019 11:01:44.4060	1750
Fri Nov 15 2019 11:01:54.4060	1761
Fri Nov 15 2019 11:02:04.4060	1780
Fri Nov 15 2019 11:02:14.4060	1791
Fri Nov 15 2019 11:02:24.4060	1797
Fri Nov 15 2019 11:02:34.4060	1799
Fri Nov 15 2019 11:02:44.4060	1799
Fri Nov 15 2019 11:02:54.4060	1798
Fri Nov 15 2019 11:03:04.4060	1797
Fri Nov 15 2019 11:03:14.4060	1794
Fri Nov 15 2019 11:03:24.4060	1790
Fri Nov 15 2019 11:03:34.4060	1786
Fri Nov 15 2019 11:03:44.4060	1782
Fri Nov 15 2019 11:03:54.4060	1776
Fri Nov 15 2019 11:04:04.4060	1770
Fri Nov 15 2019 11:04:14.4060	1765
Fri Nov 15 2019 11:04:24.4060	1759
Fri Nov 15 2019 11:04:34.4060	1752
Fri Nov 15 2019 11:04:44.4060	1747
Fri Nov 15 2019 11:04:54.4060	1751
Fri Nov 15 2019 11:05:04.4060	1759
Fri Nov 15 2019 11:05:14.4060	1767
Fri Nov 15 2019 11:05:24.4060	1772
Fri Nov 15 2019 11:05:34.4060	1775
Fri Nov 15 2019 11:05:44.4060	1777
Fri Nov 15 2019 11:05:54.4060	1778
Fri Nov 15 2019 11:06:04.4060	1778
Fri Nov 15 2019 11:06:14.4060	1777
Fri Nov 15 2019 11:06:24.4060	1776
Fri Nov 15 2019 11:06:34.4060	1775
Fri Nov 15 2019 11:06:44.4060	1773
Fri Nov 15 2019 11:06:54.4060	1771
Fri Nov 15 2019 11:07:04.4060	1768
Fri Nov 15 2019 11:07:14.4060	1765
Fri Nov 15 2019 11:07:24.4060	1760
Fri Nov 15 2019 11:07:34.4060	1755
Fri Nov 15 2019 11:07:44.4060	1751
Fri Nov 15 2019 11:07:54.4060	1762
Fri Nov 15 2019 11:08:04.4060	1780
Fri Nov 15 2019 11:08:14.4060	1791
Fri Nov 15 2019 11:08:24.4060	1797
Fri Nov 15 2019 11:08:34.4060	1801

RTO Combustion Chamber Temperature Data - VOM Destruction Efficiency Testing
GII, LLC Chicago Ilinois

Time	RTO Temp 0 - 2000F
Fri Nov 15 2019 11:08:44.4060	1800
Fri Nov 15 2019 11:08:54.4060	1799
Fri Nov 15 2019 11:09:04.4060	1796
Fri Nov 15 2019 11:09:14.4060	1791
Fri Nov 15 2019 11:09:24.4060	1787
Fri Nov 15 2019 11:09:34.4060	1783
Fri Nov 15 2019 11:09:44.4060	1779
Fri Nov 15 2019 11:09:54.4060	1773
Fri Nov 15 2019 11:10:04.4060	1766
Fri Nov 15 2019 11:10:14.4060	1759
Fri Nov 15 2019 11:10:24.4060	1752
Fri Nov 15 2019 11:10:34.4060	1745
Fri Nov 15 2019 11:10:44.4060	1738
Fri Nov 15 2019 11:10:54.4060	1743
Fri Nov 15 2019 11:11:04.4060	1753
Fri Nov 15 2019 11:11:14.4060	1761
Fri Nov 15 2019 11:11:24.4060	1767
Fri Nov 15 2019 11:11:34.4060	1770
Fri Nov 15 2019 11:11:44.4060	1771
Fri Nov 15 2019 11:11:54.4060	1772
Fri Nov 15 2019 11:12:04.4060	1773
Fri Nov 15 2019 11:12:14.4060	1773
Fri Nov 15 2019 11:12:24.4060	1771
Fri Nov 15 2019 11:12:34.4060	1769
Fri Nov 15 2019 11:12:44.4060	1765
Fri Nov 15 2019 11:12:54.4060	1761
Fri Nov 15 2019 11:13:04.4060	1757
Fri Nov 15 2019 11:13:14.4060	1751
Fri Nov 15 2019 11:13:24.4060	1745
Fri Nov 15 2019 11:13:34.4060	1738
Fri Nov 15 2019 11:13:44.4060	1732
Fri Nov 15 2019 11:13:54.4060	1747
Fri Nov 15 2019 11:14:04.4060	1771
Fri Nov 15 2019 11:14:14.4060	1786
Fri Nov 15 2019 11:14:24.4060	1794
Fri Nov 15 2019 11:14:34.4060	1798
Fri Nov 15 2019 11:14:44.4060	1800
Fri Nov 15 2019 11:14:54.4060	1798
Fri Nov 15 2019 11:15:04.4060	1796
Fri Nov 15 2019 11:15:14.4060	1791
Fri Nov 15 2019 11:15:24.4060	1785
Fri Nov 15 2019 11:15:34.4060	1780
Fri Nov 15 2019 11:15:44.4060	1774
Fri Nov 15 2019 11:15:54.4060	1767
Fri Nov 15 2019 11:16:04.4060	1762
Fri Nov 15 2019 11:16:14.4060	1758
Fri Nov 15 2019 11:16:24.4060	1756
Fri Nov 15 2019 11:16:34.4060	1754
Fri Nov 15 2019 11:16:44.4060	1751
Fri Nov 15 2019 11:16:54.4060	1756
Fri Nov 15 2019 11:17:04.4060	1766
Fri Nov 15 2019 11:17:14.4060	1773
Fri Nov 15 2019 11:17:24.4060	1779
Fri Nov 15 2019 11:17:34.4060	1785
Fri Nov 15 2019 11:17:44.4060	1786
Fri Nov 15 2019 11:17:54.4060	1784
Fri Nov 15 2019 11:18:04.4060	1782
Fri Nov 15 2019 11:18:14.4060	1779
Fri Nov 15 2019 11:18:24.4060	1776
Fri Nov 15 2019 11:18:34.4060	1771
Fri Nov 15 2019 11:18:44.4060	1767
Fri Nov 15 2019 11:18:54.4060	1763
Fri Nov 15 2019 11:19:04.4060	1758
Fri Nov 15 2019 11:19:14.4060	1753
Fri Nov 15 2019 11:19:24.4060	1750
Fri Nov 15 2019 11:19:34.4060	1746
Fri Nov 15 2019 11:19:44.4060	1740
Fri Nov 15 2019 11:19:54.4060	1745
Fri Nov 15 2019 11:20:04.4060	1770
Fri Nov 15 2019 11:20:14.4060	1792
Fri Nov 15 2019 11:20:24.4060	1803
Fri Nov 15 2019 11:20:34.4060	1808
Fri Nov 15 2019 11:20:44.4060	1813
Fri Nov 15 2019 11:20:54.4060	1816
Fri Nov 15 2019 11:21:04.4060	1815
Fri Nov 15 2019 11:21:14.4060	1812
Fri Nov 15 2019 11:21:24.4060	1808
Fri Nov 15 2019 11:21:34.4060	1802
Fri Nov 15 2019 11:21:44.4060	1795
Fri Nov 15 2019 11:21:54.4060	1788
Fri Nov 15 2019 11:22:04.4060	1780
Fri Nov 15 2019 11:22:14.4060	1773
Fri Nov 15 2019 11:22:24.4060	1768
Fri Nov 15 2019 11:22:34.4060	1766
Fri Nov 15 2019 11:22:44.4060	1764
Fri Nov 15 2019 11:22:54.4060	1771
Fri Nov 15 2019 11:23:04.4060	1781
Fri Nov 15 2019 11:23:14.4060	1789
Fri Nov 15 2019 11:23:24.4060	1793
Fri Nov 15 2019 11:23:34.4060	1795
Fri Nov 15 2019 11:23:44.4060	1796
Fri Nov 15 2019 11:23:54.4060	1795
Fri Nov 15 2019 11:24:04.4060	1794
Fri Nov 15 2019 11:24:14.4060	1792
Fri Nov 15 2019 11:24:24.4060	1790
Fri Nov 15 2019 11:24:34.4060	1788
Fri Nov 15 2019 11:24:44.4060	1785
Fri Nov 15 2019 11:24:54.4060	1782
Fri Nov 15 2019 11:25:04.4060	1779
Fri Nov 15 2019 11:25:14.4060	1774
Fri Nov 15 2019 11:25:24.4060	1769
Fri Nov 15 2019 11:25:34.4060	1763
Fri Nov 15 2019 11:25:44.4060	1757
Fri Nov 15 2019 11:25:54.4060	1768
Fri Nov 15 2019 11:26:04.4060	1787
Fri Nov 15 2019 11:26:14.4060	1798
Fri Nov 15 2019 11:26:24.4060	1805

RTO Combustion Chamber Temperature Data - VOM Destruction Efficiency Testing
GII, LLC Chicago Ilinois

Time	RTO Temp 0 - 2000F
Fri Nov 15 2019 11:26:34.4060	1807
Fri Nov 15 2019 11:26:44.4060	1807
Fri Nov 15 2019 11:26:54.4060	1804
Fri Nov 15 2019 11:27:04.4060	1801
Fri Nov 15 2019 11:27:14.4060	1797
Fri Nov 15 2019 11:27:24.4060	1793
Fri Nov 15 2019 11:27:34.4060	1789
Fri Nov 15 2019 11:27:44.4060	1783
Fri Nov 15 2019 11:27:54.4060	1776
Fri Nov 15 2019 11:28:04.4060	1769
Fri Nov 15 2019 11:28:14.4060	1766
Fri Nov 15 2019 11:28:24.4060	1766
Fri Nov 15 2019 11:28:34.4060	1768
Fri Nov 15 2019 11:28:44.4060	1769
Fri Nov 15 2019 11:28:54.4060	1773
Fri Nov 15 2019 11:29:04.4060	1777
Fri Nov 15 2019 11:29:14.4060	1781
Fri Nov 15 2019 11:29:24.4060	1783
Fri Nov 15 2019 11:29:34.4060	1784
Fri Nov 15 2019 11:29:44.4060	1785
Fri Nov 15 2019 11:29:54.4060	1785
Fri Nov 15 2019 11:30:04.4060	1785
Fri Nov 15 2019 11:30:14.4060	1785
Fri Nov 15 2019 11:30:24.4060	1785
Fri Nov 15 2019 11:30:34.4060	1784
Fri Nov 15 2019 11:30:44.4060	1777
Fri Nov 15 2019 11:30:54.4060	1767
Fri Nov 15 2019 11:31:04.4060	1759
Fri Nov 15 2019 11:31:14.4060	1752
Fri Nov 15 2019 11:31:24.4060	1746
Fri Nov 15 2019 11:31:34.4060	1741
Fri Nov 15 2019 11:31:44.4060	1736
Fri Nov 15 2019 11:31:54.4060	1731
Fri Nov 15 2019 11:32:04.4060	1726
Fri Nov 15 2019 11:32:14.4060	1722
Fri Nov 15 2019 11:32:24.4060	1718
Fri Nov 15 2019 11:32:34.4060	1714
Fri Nov 15 2019 11:32:44.4060	1710
Fri Nov 15 2019 11:32:54.4060	1706
Fri Nov 15 2019 11:33:04.4060	1703
Fri Nov 15 2019 11:33:14.4060	1700
Fri Nov 15 2019 11:33:24.4060	1697
Fri Nov 15 2019 11:33:34.4060	1693
Fri Nov 15 2019 11:33:44.4060	1690
Fri Nov 15 2019 11:33:54.4060	1687
Fri Nov 15 2019 11:34:04.4060	1684
Fri Nov 15 2019 11:34:14.4060	1682
Fri Nov 15 2019 11:34:24.4060	1679
Fri Nov 15 2019 11:34:34.4060	1676
Fri Nov 15 2019 11:34:44.4060	1676
Fri Nov 15 2019 11:34:54.4060	1681
Fri Nov 15 2019 11:35:04.4060	1688
Fri Nov 15 2019 11:35:14.4060	1695
Fri Nov 15 2019 11:35:24.4060	1702
Fri Nov 15 2019 11:35:34.4060	1709
Fri Nov 15 2019 11:35:44.4060	1715
Fri Nov 15 2019 11:35:54.4060	1720
Fri Nov 15 2019 11:36:04.4060	1725
Fri Nov 15 2019 11:36:14.4060	1730
Fri Nov 15 2019 11:36:24.4060	1734
Fri Nov 15 2019 11:36:34.4060	1737
Fri Nov 15 2019 11:36:44.4060	1741
Fri Nov 15 2019 11:36:54.4060	1744
Fri Nov 15 2019 11:37:04.4060	1747
Fri Nov 15 2019 11:37:14.4060	1749
Fri Nov 15 2019 11:37:24.4060	1750
Fri Nov 15 2019 11:37:34.4060	1751
Fri Nov 15 2019 11:37:44.4060	1748
Fri Nov 15 2019 11:37:54.4060	1741
Fri Nov 15 2019 11:38:04.4060	1732
Fri Nov 15 2019 11:38:14.4060	1724
Fri Nov 15 2019 11:38:24.4060	1717
Fri Nov 15 2019 11:38:34.4060	1712
Fri Nov 15 2019 11:38:44.4060	1712
Fri Nov 15 2019 11:38:54.4060	1714
Fri Nov 15 2019 11:39:04.4060	1716
Fri Nov 15 2019 11:39:14.4060	1721
Fri Nov 15 2019 11:39:24.4060	1726
Fri Nov 15 2019 11:39:34.4060	1732
Fri Nov 15 2019 11:39:44.4060	1738
Fri Nov 15 2019 11:39:54.4060	1742
Fri Nov 15 2019 11:40:04.4060	1741
Fri Nov 15 2019 11:40:14.4060	1738
Fri Nov 15 2019 11:40:24.4060	1736
Fri Nov 15 2019 11:40:34.4060	1732
Fri Nov 15 2019 11:40:44.4060	1725
Fri Nov 15 2019 11:40:54.4060	1723
Fri Nov 15 2019 11:41:04.4060	1724
Fri Nov 15 2019 11:41:14.4060	1724
Fri Nov 15 2019 11:41:24.4060	1723
Fri Nov 15 2019 11:41:34.4060	1723
Fri Nov 15 2019 11:41:44.4060	1722
Fri Nov 15 2019 11:41:54.4060	1721
Fri Nov 15 2019 11:42:04.4060	1720
Fri Nov 15 2019 11:42:14.4060	1718
Fri Nov 15 2019 11:42:24.4060	1716
Fri Nov 15 2019 11:42:34.4060	1714
Fri Nov 15 2019 11:42:44.4060	1711
Fri Nov 15 2019 11:42:54.4060	1707
Fri Nov 15 2019 11:43:04.4060	1703
Fri Nov 15 2019 11:43:14.4060	1700
Fri Nov 15 2019 11:43:24.4060	1696
Fri Nov 15 2019 11:43:34.4060	1695
Fri Nov 15 2019 11:43:44.4060	1707
Fri Nov 15 2019 11:43:54.4060	1725
Fri Nov 15 2019 11:44:04.4060	1738
Fri Nov 15 2019 11:44:14.4060	1745

RTO Combustion Chamber Temperature Data - VOM Destruction Efficiency Testing
GII, LLC Chicago Ilinois

Time	RTO Temp 0 - 2000F
Fri Nov 15 2019 11:44:24.4060	1751
Fri Nov 15 2019 11:44:34.4060	1757
Fri Nov 15 2019 11:44:44.4060	1763
Fri Nov 15 2019 11:44:54.4060	1764
Fri Nov 15 2019 11:45:04.4060	1763
Fri Nov 15 2019 11:45:14.4060	1760
Fri Nov 15 2019 11:45:24.4060	1757
Fri Nov 15 2019 11:45:34.4060	1755
Fri Nov 15 2019 11:45:44.4060	1750
Fri Nov 15 2019 11:45:54.4060	1747
Fri Nov 15 2019 11:46:04.4060	1743
Fri Nov 15 2019 11:46:14.4060	1740
Fri Nov 15 2019 11:46:24.4060	1740
Fri Nov 15 2019 11:46:34.4060	1742
Fri Nov 15 2019 11:46:44.4060	1748
Fri Nov 15 2019 11:46:54.4060	1754
Fri Nov 15 2019 11:47:04.4060	1758
Fri Nov 15 2019 11:47:14.4060	1760
Fri Nov 15 2019 11:47:24.4060	1762
Fri Nov 15 2019 11:47:34.4060	1765
Fri Nov 15 2019 11:47:44.4060	1765
Fri Nov 15 2019 11:47:54.4060	1765
Fri Nov 15 2019 11:48:04.4060	1762
Fri Nov 15 2019 11:48:14.4060	1759
Fri Nov 15 2019 11:48:24.4060	1756
Fri Nov 15 2019 11:48:34.4060	1753
Fri Nov 15 2019 11:48:44.4060	1749
Fri Nov 15 2019 11:48:54.4060	1746
Fri Nov 15 2019 11:49:04.4060	1739
Fri Nov 15 2019 11:49:14.4060	1732
Fri Nov 15 2019 11:49:24.4060	1720
Fri Nov 15 2019 11:49:34.4060	1707
Fri Nov 15 2019 11:49:44.4060	1707
Fri Nov 15 2019 11:49:54.4060	1731
Fri Nov 15 2019 11:50:04.4060	1756
Fri Nov 15 2019 11:50:14.4060	1776
Fri Nov 15 2019 11:50:24.4060	1792
Fri Nov 15 2019 11:50:34.4060	1801
Fri Nov 15 2019 11:50:44.4060	1804
Fri Nov 15 2019 11:50:54.4060	1806
Fri Nov 15 2019 11:51:04.4060	1809
Fri Nov 15 2019 11:51:14.4060	1810
Fri Nov 15 2019 11:51:24.4060	1809
Fri Nov 15 2019 11:51:34.4060	1806
Fri Nov 15 2019 11:51:44.4060	1803
Fri Nov 15 2019 11:51:54.4060	1799
Fri Nov 15 2019 11:52:04.4060	1794
Fri Nov 15 2019 11:52:14.4060	1791
Fri Nov 15 2019 11:52:24.4060	1788
Fri Nov 15 2019 11:52:34.4060	1783
Fri Nov 15 2019 11:52:44.4060	1784
Fri Nov 15 2019 11:52:54.4060	1788
Fri Nov 15 2019 11:53:04.4060	1793
Fri Nov 15 2019 11:53:14.4060	1794
Fri Nov 15 2019 11:53:24.4060	1803
Fri Nov 15 2019 11:53:34.4060	1807
Fri Nov 15 2019 11:53:44.4060	1807
Fri Nov 15 2019 11:53:54.4060	1804
Fri Nov 15 2019 11:54:04.4060	1801
Fri Nov 15 2019 11:54:14.4060	1796
Fri Nov 15 2019 11:54:24.4060	1792
Fri Nov 15 2019 11:54:34.4060	1785
Fri Nov 15 2019 11:54:44.4060	1778
Fri Nov 15 2019 11:54:54.4060	1772
Fri Nov 15 2019 11:55:04.4060	1765
Fri Nov 15 2019 11:55:14.4060	1757
Fri Nov 15 2019 11:55:24.4060	1748
Fri Nov 15 2019 11:55:34.4060	1735
Fri Nov 15 2019 11:55:44.4060	1735
Fri Nov 15 2019 11:55:54.4060	1757
Fri Nov 15 2019 11:56:04.4060	1785
Fri Nov 15 2019 11:56:14.4060	1806
Fri Nov 15 2019 11:56:24.4060	1819
Fri Nov 15 2019 11:56:34.4060	1824
Fri Nov 15 2019 11:56:44.4060	1826
Fri Nov 15 2019 11:56:54.4060	1827
Fri Nov 15 2019 11:57:04.4060	1826
Fri Nov 15 2019 11:57:14.4060	1821
Fri Nov 15 2019 11:57:24.4060	1815
Fri Nov 15 2019 11:57:34.4060	1809
Fri Nov 15 2019 11:57:44.4060	1803
Fri Nov 15 2019 11:57:54.4060	1797
Fri Nov 15 2019 11:58:04.4060	1790
Fri Nov 15 2019 11:58:14.4060	1785
Fri Nov 15 2019 11:58:24.4060	1781
Fri Nov 15 2019 11:58:34.4060	1778
Fri Nov 15 2019 11:58:44.4060	1782
Fri Nov 15 2019 11:58:54.4060	1791
Fri Nov 15 2019 11:59:04.4060	1797
Fri Nov 15 2019 11:59:14.4060	1800
Fri Nov 15 2019 11:59:24.4060	1801
Fri Nov 15 2019 11:59:34.4060	1805
Fri Nov 15 2019 11:59:44.4060	1807
Fri Nov 15 2019 11:59:54.4060	1807
Fri Nov 15 2019 12:00:04.4060	1804
Fri Nov 15 2019 12:00:14.4060	1798
Fri Nov 15 2019 12:00:24.4060	1791
Fri Nov 15 2019 12:00:34.4060	1784
Fri Nov 15 2019 12:00:44.4060	1779
Fri Nov 15 2019 12:00:54.4060	1774
Fri Nov 15 2019 12:01:04.4060	1771
Fri Nov 15 2019 12:01:14.4060	1766
Fri Nov 15 2019 12:01:24.4060	1761
Fri Nov 15 2019 12:01:34.4060	1758
Fri Nov 15 2019 12:01:44.4060	1767
Fri Nov 15 2019 12:01:54.4060	1793
Fri Nov 15 2019 12:02:04.4060	1809

RTO Combustion Chamber Temperature Data - VOM Destruction Efficiency Testing
GII, LLC Chicago Ilinois

Time	RTO Temp 0 - 2000F
Fri Nov 15 2019 12:02:14.4060	1817
Fri Nov 15 2019 12:02:24.4060	1821
Fri Nov 15 2019 12:02:34.4060	1822
Fri Nov 15 2019 12:02:44.4060	1822
Fri Nov 15 2019 12:02:54.4060	1820
Fri Nov 15 2019 12:03:04.4060	1817
Fri Nov 15 2019 12:03:14.4060	1813
Fri Nov 15 2019 12:03:24.4060	1808
Fri Nov 15 2019 12:03:34.4060	1803
Fri Nov 15 2019 12:03:44.4060	1796
Fri Nov 15 2019 12:03:54.4060	1789
Fri Nov 15 2019 12:04:04.4060	1781
Fri Nov 15 2019 12:04:14.4060	1773
Fri Nov 15 2019 12:04:24.4060	1766
Fri Nov 15 2019 12:04:34.4060	1762
Fri Nov 15 2019 12:04:44.4060	1766
Fri Nov 15 2019 12:04:54.4060	1774
Fri Nov 15 2019 12:05:04.4060	1780
Fri Nov 15 2019 12:05:14.4060	1785
Fri Nov 15 2019 12:05:24.4060	1788
Fri Nov 15 2019 12:05:34.4060	1789
Fri Nov 15 2019 12:05:44.4060	1789
Fri Nov 15 2019 12:05:54.4060	1782
Fri Nov 15 2019 12:06:04.4060	1772
Fri Nov 15 2019 12:06:14.4060	1764
Fri Nov 15 2019 12:06:24.4060	1758
Fri Nov 15 2019 12:06:34.4060	1753
Fri Nov 15 2019 12:06:44.4060	1749
Fri Nov 15 2019 12:06:54.4060	1744
Fri Nov 15 2019 12:07:04.4060	1740
Fri Nov 15 2019 12:07:14.4060	1735
Fri Nov 15 2019 12:07:24.4060	1731
Fri Nov 15 2019 12:07:34.4060	1728
Fri Nov 15 2019 12:07:44.4060	1724
Fri Nov 15 2019 12:07:54.4060	1721
Fri Nov 15 2019 12:08:04.4060	1717
Fri Nov 15 2019 12:08:14.4060	1714
Fri Nov 15 2019 12:08:24.4060	1711
Fri Nov 15 2019 12:08:34.4060	1708
Fri Nov 15 2019 12:08:44.4060	1706
Fri Nov 15 2019 12:08:54.4060	1710
Fri Nov 15 2019 12:09:04.4060	1716
Fri Nov 15 2019 12:09:14.4060	1722
Fri Nov 15 2019 12:09:24.4060	1728
Fri Nov 15 2019 12:09:34.4060	1733
Fri Nov 15 2019 12:09:44.4060	1738
Fri Nov 15 2019 12:09:54.4060	1743
Fri Nov 15 2019 12:10:04.4060	1746
Fri Nov 15 2019 12:10:14.4060	1750
Fri Nov 15 2019 12:10:24.4060	1753
Fri Nov 15 2019 12:10:34.4060	1755
Fri Nov 15 2019 12:10:44.4060	1758
Fri Nov 15 2019 12:10:54.4060	1760
Fri Nov 15 2019 12:11:04.4060	1762
Fri Nov 15 2019 12:11:14.4060	1764
Fri Nov 15 2019 12:11:24.4060	1766
Fri Nov 15 2019 12:11:34.4060	1767
Fri Nov 15 2019 12:11:44.4060	1763
Fri Nov 15 2019 12:11:54.4060	1757
Fri Nov 15 2019 12:12:04.4060	1749
Fri Nov 15 2019 12:12:14.4060	1742
Fri Nov 15 2019 12:12:24.4060	1736
Fri Nov 15 2019 12:12:34.4060	1733
Fri Nov 15 2019 12:12:44.4060	1733
Fri Nov 15 2019 12:12:54.4060	1734
Fri Nov 15 2019 12:13:04.4060	1735
Fri Nov 15 2019 12:13:14.4060	1738
Fri Nov 15 2019 12:13:24.4060	1741
Fri Nov 15 2019 12:13:34.4060	1745
Fri Nov 15 2019 12:13:44.4060	1752
Fri Nov 15 2019 12:13:54.4060	1753
Fri Nov 15 2019 12:14:04.4060	1748
Fri Nov 15 2019 12:14:14.4060	1740
Fri Nov 15 2019 12:14:24.4060	1729
Fri Nov 15 2019 12:14:34.4060	1716
Fri Nov 15 2019 12:14:44.4060	1708
Fri Nov 15 2019 12:14:54.4060	1706
Fri Nov 15 2019 12:15:04.4060	1706
Fri Nov 15 2019 12:15:14.4060	1709
Fri Nov 15 2019 12:15:24.4060	1711
Fri Nov 15 2019 12:15:34.4060	1714
Fri Nov 15 2019 12:15:44.4060	1717
Fri Nov 15 2019 12:15:54.4060	1719
Fri Nov 15 2019 12:16:04.4060	1721
Fri Nov 15 2019 12:16:14.4060	1722
Fri Nov 15 2019 12:16:24.4060	1722
Fri Nov 15 2019 12:16:34.4060	1722
Fri Nov 15 2019 12:16:44.4060	1721
Fri Nov 15 2019 12:16:54.4060	1718
Fri Nov 15 2019 12:17:04.4060	1715
Fri Nov 15 2019 12:17:14.4060	1710
Fri Nov 15 2019 12:17:24.4060	1705
Fri Nov 15 2019 12:17:34.4060	1702
Fri Nov 15 2019 12:17:44.4060	1716
Fri Nov 15 2019 12:17:54.4060	1734
Fri Nov 15 2019 12:18:04.4060	1745
Fri Nov 15 2019 12:18:14.4060	1751
Fri Nov 15 2019 12:18:24.4060	1758
Fri Nov 15 2019 12:18:34.4060	1761
Fri Nov 15 2019 12:18:44.4060	1760
Fri Nov 15 2019 12:18:54.4060	1757
Fri Nov 15 2019 12:19:04.4060	1752
Fri Nov 15 2019 12:19:14.4060	1748
Fri Nov 15 2019 12:19:24.4060	1745
Fri Nov 15 2019 12:19:34.4060	1742
Fri Nov 15 2019 12:19:44.4060	1740
Fri Nov 15 2019 12:19:54.4060	1738

RTO Combustion Chamber Temperature Data - VOM Destruction Efficiency Testing
GII, LLC Chicago Ilinois

Time	RTO Temp 0 - 2000F
Fri Nov 15 2019 12:20:04.4060	1738
Fri Nov 15 2019 12:20:14.4060	1739
Fri Nov 15 2019 12:20:24.4060	1742
Fri Nov 15 2019 12:20:34.4060	1742
Fri Nov 15 2019 12:20:44.4060	1745
Fri Nov 15 2019 12:20:54.4060	1750
Fri Nov 15 2019 12:21:04.4060	1754
Fri Nov 15 2019 12:21:14.4060	1756
Fri Nov 15 2019 12:21:24.4060	1763
Fri Nov 15 2019 12:21:34.4060	1772
Fri Nov 15 2019 12:21:44.4060	1777
Fri Nov 15 2019 12:21:54.4060	1779
Fri Nov 15 2019 12:22:04.4060	1778
Fri Nov 15 2019 12:22:14.4060	1776
Fri Nov 15 2019 12:22:24.4060	1772
Fri Nov 15 2019 12:22:34.4060	1770
Fri Nov 15 2019 12:22:44.4060	1765
Fri Nov 15 2019 12:22:54.4060	1762
Fri Nov 15 2019 12:23:04.4060	1766
Fri Nov 15 2019 12:23:14.4060	1765
Fri Nov 15 2019 12:23:24.4060	1755
Fri Nov 15 2019 12:23:34.4060	1741
Fri Nov 15 2019 12:23:44.4060	1731
Fri Nov 15 2019 12:23:54.4060	1724
Fri Nov 15 2019 12:24:04.4060	1719
Fri Nov 15 2019 12:24:14.4060	1714
Fri Nov 15 2019 12:24:24.4060	1711
Fri Nov 15 2019 12:24:34.4060	1707
Fri Nov 15 2019 12:24:44.4060	1703
Fri Nov 15 2019 12:24:54.4060	1699
Fri Nov 15 2019 12:25:04.4060	1695
Fri Nov 15 2019 12:25:14.4060	1691
Fri Nov 15 2019 12:25:24.4060	1688
Fri Nov 15 2019 12:25:34.4060	1685
Fri Nov 15 2019 12:25:44.4060	1682
Fri Nov 15 2019 12:25:54.4060	1679
Fri Nov 15 2019 12:26:04.4060	1676
Fri Nov 15 2019 12:26:14.4060	1673
Fri Nov 15 2019 12:26:24.4060	1672
Fri Nov 15 2019 12:26:34.4060	1674
Fri Nov 15 2019 12:26:44.4060	1676
Fri Nov 15 2019 12:26:54.4060	1678
Fri Nov 15 2019 12:27:04.4060	1680
Fri Nov 15 2019 12:27:14.4060	1681
Fri Nov 15 2019 12:27:24.4060	1681
Fri Nov 15 2019 12:27:34.4060	1680
Fri Nov 15 2019 12:27:44.4060	1680
Fri Nov 15 2019 12:27:54.4060	1681
Fri Nov 15 2019 12:28:04.4060	1683
Fri Nov 15 2019 12:28:14.4060	1686
Fri Nov 15 2019 12:28:24.4060	1690
Fri Nov 15 2019 12:28:34.4060	1694
Fri Nov 15 2019 12:28:44.4060	1700
Fri Nov 15 2019 12:28:54.4060	1706
Fri Nov 15 2019 12:29:04.4060	1712
Fri Nov 15 2019 12:29:14.4060	1718
Fri Nov 15 2019 12:29:24.4060	1716
Fri Nov 15 2019 12:29:34.4060	1706
Fri Nov 15 2019 12:29:44.4060	1695
Fri Nov 15 2019 12:29:54.4060	1682
Fri Nov 15 2019 12:30:04.4060	1675
Fri Nov 15 2019 12:30:14.4060	1673
Fri Nov 15 2019 12:30:24.4060	1671
Fri Nov 15 2019 12:30:34.4060	1669
Fri Nov 15 2019 12:30:44.4060	1667
Fri Nov 15 2019 12:30:54.4060	1667
Fri Nov 15 2019 12:31:04.4060	1666
Fri Nov 15 2019 12:31:14.4060	1665
Fri Nov 15 2019 12:31:24.4060	1661
Fri Nov 15 2019 12:31:34.4060	1656
Fri Nov 15 2019 12:31:44.4060	1650
Fri Nov 15 2019 12:31:54.4060	1641
Fri Nov 15 2019 12:32:04.4060	1633
Fri Nov 15 2019 12:32:14.4060	1628
Fri Nov 15 2019 12:32:24.4060	1625
Fri Nov 15 2019 12:32:34.4060	1624
Fri Nov 15 2019 12:32:44.4060	1623
Fri Nov 15 2019 12:32:54.4060	1624
Fri Nov 15 2019 12:33:04.4060	1630
Fri Nov 15 2019 12:33:14.4060	1638
Fri Nov 15 2019 12:33:24.4060	1645
Fri Nov 15 2019 12:33:34.4060	1651
Fri Nov 15 2019 12:33:44.4060	1657
Fri Nov 15 2019 12:33:54.4060	1662
Fri Nov 15 2019 12:34:04.4060	1667
Fri Nov 15 2019 12:34:14.4060	1672
Fri Nov 15 2019 12:34:24.4060	1678
Fri Nov 15 2019 12:34:34.4060	1683
Fri Nov 15 2019 12:34:44.4060	1688
Fri Nov 15 2019 12:34:54.4060	1687
Fri Nov 15 2019 12:35:04.4060	1682
Fri Nov 15 2019 12:35:14.4060	1673
Fri Nov 15 2019 12:35:24.4060	1663
Fri Nov 15 2019 12:35:34.4060	1652
Fri Nov 15 2019 12:35:44.4060	1645
Fri Nov 15 2019 12:35:54.4060	1639
Fri Nov 15 2019 12:36:04.4060	1632
Fri Nov 15 2019 12:36:14.4060	1627
Fri Nov 15 2019 12:36:24.4060	1623
Fri Nov 15 2019 12:36:34.4060	1621
Fri Nov 15 2019 12:36:44.4060	1621
Fri Nov 15 2019 12:36:54.4060	1622
Fri Nov 15 2019 12:37:04.4060	1624
Fri Nov 15 2019 12:37:14.4060	1638
Fri Nov 15 2019 12:37:24.4060	1659
Fri Nov 15 2019 12:37:34.4060	1682
Fri Nov 15 2019 12:37:44.4060	1703

RTO Combustion Chamber Temperature Data - VOM Destruction Efficiency Testing
GII, LLC Chicago Ilinois

Time	RTO Temp 0 - 2000F
Fri Nov 15 2019 12:37:54.4060	1720
Fri Nov 15 2019 12:38:04.4060	1731
Fri Nov 15 2019 12:38:14.4060	1740
Fri Nov 15 2019 12:38:24.4060	1747
Fri Nov 15 2019 12:38:34.4060	1751
Fri Nov 15 2019 12:38:44.4060	1759
Fri Nov 15 2019 12:38:54.4060	1763
Fri Nov 15 2019 12:39:04.4060	1764
Fri Nov 15 2019 12:39:14.4060	1765
Fri Nov 15 2019 12:39:24.4060	1767
Fri Nov 15 2019 12:39:34.4060	1774
Fri Nov 15 2019 12:39:44.4060	1775
Fri Nov 15 2019 12:39:54.4060	1775
Fri Nov 15 2019 12:40:04.4060	1774
Fri Nov 15 2019 12:40:14.4060	1774
Fri Nov 15 2019 12:40:24.4060	1774
Fri Nov 15 2019 12:40:34.4060	1775
Fri Nov 15 2019 12:40:44.4060	1781
Fri Nov 15 2019 12:40:54.4060	1783
Fri Nov 15 2019 12:41:04.4060	1782
Fri Nov 15 2019 12:41:14.4060	1779
Fri Nov 15 2019 12:41:24.4060	1776
Fri Nov 15 2019 12:41:34.4060	1772
Fri Nov 15 2019 12:41:44.4060	1767
Fri Nov 15 2019 12:41:54.4060	1764
Fri Nov 15 2019 12:42:04.4060	1760
Fri Nov 15 2019 12:42:14.4060	1755
Fri Nov 15 2019 12:42:24.4060	1749
Fri Nov 15 2019 12:42:34.4060	1741
Fri Nov 15 2019 12:42:44.4060	1730
Fri Nov 15 2019 12:42:54.4060	1715
Fri Nov 15 2019 12:43:04.4060	1703
Fri Nov 15 2019 12:43:14.4060	1711
Fri Nov 15 2019 12:43:24.4060	1743
Fri Nov 15 2019 12:43:34.4060	1772
Fri Nov 15 2019 12:43:44.4060	1797
Fri Nov 15 2019 12:43:54.4060	1811
Fri Nov 15 2019 12:44:04.4060	1817
Fri Nov 15 2019 12:44:14.4060	1821
Fri Nov 15 2019 12:44:24.4060	1823
Fri Nov 15 2019 12:44:34.4060	1823
Fri Nov 15 2019 12:44:44.4060	1825
Fri Nov 15 2019 12:44:54.4060	1827
Fri Nov 15 2019 12:45:04.4060	1825
Fri Nov 15 2019 12:45:14.4060	1821
Fri Nov 15 2019 12:45:24.4060	1817
Fri Nov 15 2019 12:45:34.4060	1814
Fri Nov 15 2019 12:45:44.4060	1809
Fri Nov 15 2019 12:45:54.4060	1804
Fri Nov 15 2019 12:46:04.4060	1801
Fri Nov 15 2019 12:46:14.4060	1801
Fri Nov 15 2019 12:46:24.4060	1803
Fri Nov 15 2019 12:46:34.4060	1803
Fri Nov 15 2019 12:46:44.4060	1806
Fri Nov 15 2019 12:46:54.4060	1808
Fri Nov 15 2019 12:47:04.4060	1807
Fri Nov 15 2019 12:47:14.4060	1803
Fri Nov 15 2019 12:47:24.4060	1798
Fri Nov 15 2019 12:47:34.4060	1793
Fri Nov 15 2019 12:47:44.4060	1788
Fri Nov 15 2019 12:47:54.4060	1782
Fri Nov 15 2019 12:48:04.4060	1776
Fri Nov 15 2019 12:48:14.4060	1768
Fri Nov 15 2019 12:48:24.4060	1763
Fri Nov 15 2019 12:48:34.4060	1758
Fri Nov 15 2019 12:48:44.4060	1753
Fri Nov 15 2019 12:48:54.4060	1744
Fri Nov 15 2019 12:49:04.4060	1735
Fri Nov 15 2019 12:49:14.4060	1750
Fri Nov 15 2019 12:49:24.4060	1778
Fri Nov 15 2019 12:49:34.4060	1800
Fri Nov 15 2019 12:49:44.4060	1812
Fri Nov 15 2019 12:49:54.4060	1816
Fri Nov 15 2019 12:50:04.4060	1818
Fri Nov 15 2019 12:50:14.4060	1820
Fri Nov 15 2019 12:50:24.4060	1819
Fri Nov 15 2019 12:50:34.4060	1817
Fri Nov 15 2019 12:50:44.4060	1814
Fri Nov 15 2019 12:50:54.4060	1809
Fri Nov 15 2019 12:51:04.4060	1804
Fri Nov 15 2019 12:51:14.4060	1799
Fri Nov 15 2019 12:51:24.4060	1792
Fri Nov 15 2019 12:51:34.4060	1786
Fri Nov 15 2019 12:51:44.4060	1779
Fri Nov 15 2019 12:51:54.4060	1774
Fri Nov 15 2019 12:52:04.4060	1770
Fri Nov 15 2019 12:52:14.4060	1774
Fri Nov 15 2019 12:52:24.4060	1780
Fri Nov 15 2019 12:52:34.4060	1786
Fri Nov 15 2019 12:52:44.4060	1791
Fri Nov 15 2019 12:52:54.4060	1793
Fri Nov 15 2019 12:53:04.4060	1794
Fri Nov 15 2019 12:53:14.4060	1794
Fri Nov 15 2019 12:53:24.4060	1791
Fri Nov 15 2019 12:53:34.4060	1788
Fri Nov 15 2019 12:53:44.4060	1783
Fri Nov 15 2019 12:53:54.4060	1781
Fri Nov 15 2019 12:54:04.4060	1778
Fri Nov 15 2019 12:54:14.4060	1774
Fri Nov 15 2019 12:54:24.4060	1769
Fri Nov 15 2019 12:54:34.4060	1764
Fri Nov 15 2019 12:54:44.4060	1761
Fri Nov 15 2019 12:54:54.4060	1758
Fri Nov 15 2019 12:55:04.4060	1757
Fri Nov 15 2019 12:55:14.4060	1775
Fri Nov 15 2019 12:55:24.4060	1794
Fri Nov 15 2019 12:55:34.4060	1806

RTO Combustion Chamber Temperature Data - VOM Destruction Efficiency Testing
GII, LLC Chicago Ilinois

Time	RTO Temp 0 - 2000F
Fri Nov 15 2019 12:55:44.4060	1811
Fri Nov 15 2019 12:55:54.4060	1812
Fri Nov 15 2019 12:56:04.4060	1811
Fri Nov 15 2019 12:56:14.4060	1810
Fri Nov 15 2019 12:56:24.4060	1811
Fri Nov 15 2019 12:56:34.4060	1809
Fri Nov 15 2019 12:56:44.4060	1806
Fri Nov 15 2019 12:56:54.4060	1802
Fri Nov 15 2019 12:57:04.4060	1798
Fri Nov 15 2019 12:57:14.4060	1792
Fri Nov 15 2019 12:57:24.4060	1785
Fri Nov 15 2019 12:57:34.4060	1782
Fri Nov 15 2019 12:57:44.4060	1779
Fri Nov 15 2019 12:57:54.4060	1776
Fri Nov 15 2019 12:58:04.4060	1770
Fri Nov 15 2019 12:58:14.4060	1767
Fri Nov 15 2019 12:58:24.4060	1769
Fri Nov 15 2019 12:58:34.4060	1772
Fri Nov 15 2019 12:58:44.4060	1775
Fri Nov 15 2019 12:58:54.4060	1769
Fri Nov 15 2019 12:59:04.4060	1758
Fri Nov 15 2019 12:59:14.4060	1751
Fri Nov 15 2019 12:59:24.4060	1745
Fri Nov 15 2019 12:59:34.4060	1740
Fri Nov 15 2019 12:59:44.4060	1735
Fri Nov 15 2019 12:59:54.4060	1730
Fri Nov 15 2019 13:00:04.4060	1725
Fri Nov 15 2019 13:00:14.4060	1721
Fri Nov 15 2019 13:00:24.4060	1717
Fri Nov 15 2019 13:00:34.4060	1713
Fri Nov 15 2019 13:00:44.4060	1710
Fri Nov 15 2019 13:00:54.4060	1706
Fri Nov 15 2019 13:01:04.4060	1702
Fri Nov 15 2019 13:01:14.4060	1699
Fri Nov 15 2019 13:01:24.4060	1695
Fri Nov 15 2019 13:01:34.4060	1692
Fri Nov 15 2019 13:01:44.4060	1692
Fri Nov 15 2019 13:01:54.4060	1693
Fri Nov 15 2019 13:02:04.4060	1695
Fri Nov 15 2019 13:02:14.4060	1697
Fri Nov 15 2019 13:02:24.4060	1699
Fri Nov 15 2019 13:02:34.4060	1700
Fri Nov 15 2019 13:02:44.4060	1699
Fri Nov 15 2019 13:02:54.4060	1699
Fri Nov 15 2019 13:03:04.4060	1699
Fri Nov 15 2019 13:03:14.4060	1700
Fri Nov 15 2019 13:03:24.4060	1701
Fri Nov 15 2019 13:03:34.4060	1704
Fri Nov 15 2019 13:03:44.4060	1707
Fri Nov 15 2019 13:03:54.4060	1712
Fri Nov 15 2019 13:04:04.4060	1717
Fri Nov 15 2019 13:04:14.4060	1722
Fri Nov 15 2019 13:04:24.4060	1727
Fri Nov 15 2019 13:04:34.4060	1731
Fri Nov 15 2019 13:04:44.4060	1727
Fri Nov 15 2019 13:04:54.4060	1721
Fri Nov 15 2019 13:05:04.4060	1714
Fri Nov 15 2019 13:05:14.4060	1708
Fri Nov 15 2019 13:05:24.4060	1704
Fri Nov 15 2019 13:05:34.4060	1706
Fri Nov 15 2019 13:05:44.4060	1708
Fri Nov 15 2019 13:05:54.4060	1710
Fri Nov 15 2019 13:06:04.4060	1711
Fri Nov 15 2019 13:06:14.4060	1712
Fri Nov 15 2019 13:06:24.4060	1712
Fri Nov 15 2019 13:06:34.4060	1711
Fri Nov 15 2019 13:06:44.4060	1710
Fri Nov 15 2019 13:06:54.4060	1707
Fri Nov 15 2019 13:07:04.4060	1704
Fri Nov 15 2019 13:07:14.4060	1699
Fri Nov 15 2019 13:07:24.4060	1694
Fri Nov 15 2019 13:07:34.4060	1687
Fri Nov 15 2019 13:07:44.4060	1678
Fri Nov 15 2019 13:07:54.4060	1672
Fri Nov 15 2019 13:08:04.4060	1667
Fri Nov 15 2019 13:08:14.4060	1667
Fri Nov 15 2019 13:08:24.4060	1670
Fri Nov 15 2019 13:08:34.4060	1673
Fri Nov 15 2019 13:08:44.4060	1677
Fri Nov 15 2019 13:08:54.4060	1683
Fri Nov 15 2019 13:09:04.4060	1689
Fri Nov 15 2019 13:09:14.4060	1695
Fri Nov 15 2019 13:09:24.4060	1698
Fri Nov 15 2019 13:09:34.4060	1701
Fri Nov 15 2019 13:09:44.4060	1704
Fri Nov 15 2019 13:09:54.4060	1707
Fri Nov 15 2019 13:10:04.4060	1710
Fri Nov 15 2019 13:10:14.4060	1713
Fri Nov 15 2019 13:10:24.4060	1716
Fri Nov 15 2019 13:10:34.4060	1717
Fri Nov 15 2019 13:10:44.4060	1715
Fri Nov 15 2019 13:10:54.4060	1713
Fri Nov 15 2019 13:11:04.4060	1709
Fri Nov 15 2019 13:11:14.4060	1706
Fri Nov 15 2019 13:11:24.4060	1702
Fri Nov 15 2019 13:11:34.4060	1701
Fri Nov 15 2019 13:11:44.4060	1700
Fri Nov 15 2019 13:11:54.4060	1698
Fri Nov 15 2019 13:12:04.4060	1697
Fri Nov 15 2019 13:12:14.4060	1695
Fri Nov 15 2019 13:12:24.4060	1692
Fri Nov 15 2019 13:12:34.4060	1690
Fri Nov 15 2019 13:12:44.4060	1686
Fri Nov 15 2019 13:12:54.4060	1683
Fri Nov 15 2019 13:13:04.4060	1681
Fri Nov 15 2019 13:13:14.4060	1678
Fri Nov 15 2019 13:13:24.4060	1676

RTO Combustion Chamber Temperature Data - VOM Destruction Efficiency Testing
GII, LLC Chicago Ilinois

Time	RTO Temp 0 - 2000F
Fri Nov 15 2019 13:13:34.4060	1680
Fri Nov 15 2019 13:13:44.4060	1689
Fri Nov 15 2019 13:13:54.4060	1699
Fri Nov 15 2019 13:14:04.4060	1708
Fri Nov 15 2019 13:14:14.4060	1715
Fri Nov 15 2019 13:14:24.4060	1718
Fri Nov 15 2019 13:14:34.4060	1721
Fri Nov 15 2019 13:14:44.4060	1724
Fri Nov 15 2019 13:14:54.4060	1724
Fri Nov 15 2019 13:15:04.4060	1725
Fri Nov 15 2019 13:15:14.4060	1723
Fri Nov 15 2019 13:15:24.4060	1722
Fri Nov 15 2019 13:15:34.4060	1721
Fri Nov 15 2019 13:15:44.4060	1720
Fri Nov 15 2019 13:15:54.4060	1718
Fri Nov 15 2019 13:16:04.4060	1717
Fri Nov 15 2019 13:16:14.4060	1714
Fri Nov 15 2019 13:16:24.4060	1710
Fri Nov 15 2019 13:16:34.4060	1709
Fri Nov 15 2019 13:16:44.4060	1719
Fri Nov 15 2019 13:16:54.4060	1747
Fri Nov 15 2019 13:17:04.4060	1766
Fri Nov 15 2019 13:17:14.4060	1777
Fri Nov 15 2019 13:17:24.4060	1783
Fri Nov 15 2019 13:17:34.4060	1787
Fri Nov 15 2019 13:17:44.4060	1788
Fri Nov 15 2019 13:17:54.4060	1786
Fri Nov 15 2019 13:18:04.4060	1782
Fri Nov 15 2019 13:18:14.4060	1778
Fri Nov 15 2019 13:18:24.4060	1775
Fri Nov 15 2019 13:18:34.4060	1771
Fri Nov 15 2019 13:18:44.4060	1767
Fri Nov 15 2019 13:18:54.4060	1765

RTO Combustion Chamber Temperature Data - VOM Destruction Efficiency Testing
GII, LLC Chicago Ilinois

	Time	RTO Temp 0 - 2000F
11-18-19 Run 2	Mon Nov 18 2019 08:51:04.4060	1764
	Mon Nov 18 2019 08:51:14.4060	1769
	Mon Nov 18 2019 08:51:24.4060	1773
	Mon Nov 18 2019 08:51:34.4060	1776
Time:	Mon Nov 18 2019 08:51:44.4060	1777
8:51 AM -	Mon Nov 18 2019 08:51:54.4060	1777
10:12 AM	Mon Nov 18 2019 08:52:04.4060	1777
	Mon Nov 18 2019 08:52:14.4060	1776
	Mon Nov 18 2019 08:52:24.4060	1775
	Mon Nov 18 2019 08:52:34.4060	1774
	Mon Nov 18 2019 08:52:44.4060	1774
	Mon Nov 18 2019 08:52:54.4060	1773
	Mon Nov 18 2019 08:53:04.4060	1772
	Mon Nov 18 2019 08:53:14.4060	1770
	Mon Nov 18 2019 08:53:24.4060	1768
	Mon Nov 18 2019 08:53:34.4060	1765
	Mon Nov 18 2019 08:53:44.4060	1762
	Mon Nov 18 2019 08:53:54.4060	1758
	Mon Nov 18 2019 08:54:04.4060	1759
	Mon Nov 18 2019 08:54:14.4060	1774
	Mon Nov 18 2019 08:54:24.4060	1786
	Mon Nov 18 2019 08:54:34.4060	1792
	Mon Nov 18 2019 08:54:44.4060	1793
	Mon Nov 18 2019 08:54:54.4060	1793
	Mon Nov 18 2019 08:55:04.4060	1792
	Mon Nov 18 2019 08:55:14.4060	1791
	Mon Nov 18 2019 08:55:24.4060	1789
	Mon Nov 18 2019 08:55:34.4060	1786
	Mon Nov 18 2019 08:55:44.4060	1782
	Mon Nov 18 2019 08:55:54.4060	1779
	Mon Nov 18 2019 08:56:04.4060	1775
	Mon Nov 18 2019 08:56:14.4060	1771
	Mon Nov 18 2019 08:56:24.4060	1767
	Mon Nov 18 2019 08:56:34.4060	1761
	Mon Nov 18 2019 08:56:44.4060	1756
	Mon Nov 18 2019 08:56:54.4060	1751
	Mon Nov 18 2019 08:57:04.4060	1750
	Mon Nov 18 2019 08:57:14.4060	1755
	Mon Nov 18 2019 08:57:24.4060	1760
	Mon Nov 18 2019 08:57:34.4060	1764
	Mon Nov 18 2019 08:57:44.4060	1767
	Mon Nov 18 2019 08:57:54.4060	1768
	Mon Nov 18 2019 08:58:04.4060	1769
	Mon Nov 18 2019 08:58:14.4060	1770
	Mon Nov 18 2019 08:58:24.4060	1769
	Mon Nov 18 2019 08:58:34.4060	1768
	Mon Nov 18 2019 08:58:44.4060	1768
	Mon Nov 18 2019 08:58:54.4060	1768
	Mon Nov 18 2019 08:59:04.4060	1767
	Mon Nov 18 2019 08:59:14.4060	1765
	Mon Nov 18 2019 08:59:24.4060	1763
	Mon Nov 18 2019 08:59:34.4060	1760
	Mon Nov 18 2019 08:59:44.4060	1757
	Mon Nov 18 2019 08:59:54.4060	1754
	Mon Nov 18 2019 09:00:04.4060	1756
	Mon Nov 18 2019 09:00:14.4060	1770
	Mon Nov 18 2019 09:00:24.4060	1782
	Mon Nov 18 2019 09:00:34.4060	1789
	Mon Nov 18 2019 09:00:44.4060	1793
	Mon Nov 18 2019 09:00:54.4060	1793
	Mon Nov 18 2019 09:01:04.4060	1791
	Mon Nov 18 2019 09:01:14.4060	1789
	Mon Nov 18 2019 09:01:24.4060	1787
	Mon Nov 18 2019 09:01:34.4060	1784
	Mon Nov 18 2019 09:01:44.4060	1781
	Mon Nov 18 2019 09:01:54.4060	1779
	Mon Nov 18 2019 09:02:04.4060	1775
	Mon Nov 18 2019 09:02:14.4060	1771
	Mon Nov 18 2019 09:02:24.4060	1766
	Mon Nov 18 2019 09:02:34.4060	1759
	Mon Nov 18 2019 09:02:44.4060	1753
	Mon Nov 18 2019 09:02:54.4060	1747
	Mon Nov 18 2019 09:03:04.4060	1745
	Mon Nov 18 2019 09:03:14.4060	1750
	Mon Nov 18 2019 09:03:24.4060	1756
	Mon Nov 18 2019 09:03:34.4060	1761
	Mon Nov 18 2019 09:03:44.4060	1765
	Mon Nov 18 2019 09:03:54.4060	1767
	Mon Nov 18 2019 09:04:04.4060	1768
	Mon Nov 18 2019 09:04:14.4060	1768
	Mon Nov 18 2019 09:04:24.4060	1767
	Mon Nov 18 2019 09:04:34.4060	1767
	Mon Nov 18 2019 09:04:44.4060	1767
	Mon Nov 18 2019 09:04:54.4060	1767
	Mon Nov 18 2019 09:05:04.4060	1766
	Mon Nov 18 2019 09:05:14.4060	1766
	Mon Nov 18 2019 09:05:24.4060	1764
	Mon Nov 18 2019 09:05:34.4060	1762
	Mon Nov 18 2019 09:05:44.4060	1760
	Mon Nov 18 2019 09:05:54.4060	1756
	Mon Nov 18 2019 09:06:04.4060	1756
	Mon Nov 18 2019 09:06:14.4060	1766
	Mon Nov 18 2019 09:06:24.4060	1777
	Mon Nov 18 2019 09:06:34.4060	1785
	Mon Nov 18 2019 09:06:44.4060	1788
	Mon Nov 18 2019 09:06:54.4060	1788
	Mon Nov 18 2019 09:07:04.4060	1787
	Mon Nov 18 2019 09:07:14.4060	1785
	Mon Nov 18 2019 09:07:24.4060	1782
	Mon Nov 18 2019 09:07:34.4060	1779
	Mon Nov 18 2019 09:07:44.4060	1775
	Mon Nov 18 2019 09:07:54.4060	1772
	Mon Nov 18 2019 09:08:04.4060	1766
	Mon Nov 18 2019 09:08:14.4060	1761
	Mon Nov 18 2019 09:08:24.4060	1756
	Mon Nov 18 2019 09:08:34.4060	1750
	Mon Nov 18 2019 09:08:44.4060	1746

RTO Combustion Chamber Temperature Data - VOM Destruction Efficiency Testing
GII, LLC Chicago Ilinois

Time	RTO Temp 0 - 2000F
Mon Nov 18 2019 09:08:54.4060	1743
Mon Nov 18 2019 09:09:04.4060	1742
Mon Nov 18 2019 09:09:14.4060	1748
Mon Nov 18 2019 09:09:24.4060	1753
Mon Nov 18 2019 09:09:34.4060	1759
Mon Nov 18 2019 09:09:44.4060	1763
Mon Nov 18 2019 09:09:54.4060	1764
Mon Nov 18 2019 09:10:04.4060	1764
Mon Nov 18 2019 09:10:14.4060	1764
Mon Nov 18 2019 09:10:24.4060	1764
Mon Nov 18 2019 09:10:34.4060	1763
Mon Nov 18 2019 09:10:44.4060	1762
Mon Nov 18 2019 09:10:54.4060	1761
Mon Nov 18 2019 09:11:04.4060	1760
Mon Nov 18 2019 09:11:14.4060	1759
Mon Nov 18 2019 09:11:24.4060	1757
Mon Nov 18 2019 09:11:34.4060	1755
Mon Nov 18 2019 09:11:44.4060	1753
Mon Nov 18 2019 09:11:54.4060	1750
Mon Nov 18 2019 09:12:04.4060	1754
Mon Nov 18 2019 09:12:14.4060	1769
Mon Nov 18 2019 09:12:24.4060	1781
Mon Nov 18 2019 09:12:34.4060	1787
Mon Nov 18 2019 09:12:44.4060	1789
Mon Nov 18 2019 09:12:54.4060	1789
Mon Nov 18 2019 09:13:04.4060	1788
Mon Nov 18 2019 09:13:14.4060	1787
Mon Nov 18 2019 09:13:24.4060	1785
Mon Nov 18 2019 09:13:34.4060	1782
Mon Nov 18 2019 09:13:44.4060	1779
Mon Nov 18 2019 09:13:54.4060	1775
Mon Nov 18 2019 09:14:04.4060	1771
Mon Nov 18 2019 09:14:14.4060	1767
Mon Nov 18 2019 09:14:24.4060	1762
Mon Nov 18 2019 09:14:34.4060	1759
Mon Nov 18 2019 09:14:44.4060	1754
Mon Nov 18 2019 09:14:54.4060	1749
Mon Nov 18 2019 09:15:04.4060	1750
Mon Nov 18 2019 09:15:14.4060	1755
Mon Nov 18 2019 09:15:24.4060	1760
Mon Nov 18 2019 09:15:34.4060	1764
Mon Nov 18 2019 09:15:44.4060	1766
Mon Nov 18 2019 09:15:54.4060	1767
Mon Nov 18 2019 09:16:04.4060	1768
Mon Nov 18 2019 09:16:14.4060	1768
Mon Nov 18 2019 09:16:24.4060	1767
Mon Nov 18 2019 09:16:34.4060	1767
Mon Nov 18 2019 09:16:44.4060	1767
Mon Nov 18 2019 09:16:54.4060	1766
Mon Nov 18 2019 09:17:04.4060	1765
Mon Nov 18 2019 09:17:14.4060	1763
Mon Nov 18 2019 09:17:24.4060	1762
Mon Nov 18 2019 09:17:34.4060	1760
Mon Nov 18 2019 09:17:44.4060	1758
Mon Nov 18 2019 09:17:54.4060	1755
Mon Nov 18 2019 09:18:04.4060	1756
Mon Nov 18 2019 09:18:14.4060	1768
Mon Nov 18 2019 09:18:24.4060	1780
Mon Nov 18 2019 09:18:34.4060	1786
Mon Nov 18 2019 09:18:44.4060	1788
Mon Nov 18 2019 09:18:54.4060	1788
Mon Nov 18 2019 09:19:04.4060	1787
Mon Nov 18 2019 09:19:14.4060	1785
Mon Nov 18 2019 09:19:24.4060	1783
Mon Nov 18 2019 09:19:34.4060	1781
Mon Nov 18 2019 09:19:44.4060	1778
Mon Nov 18 2019 09:19:54.4060	1775
Mon Nov 18 2019 09:20:04.4060	1772
Mon Nov 18 2019 09:20:14.4060	1769
Mon Nov 18 2019 09:20:24.4060	1765
Mon Nov 18 2019 09:20:34.4060	1760
Mon Nov 18 2019 09:20:44.4060	1755
Mon Nov 18 2019 09:20:54.4060	1753
Mon Nov 18 2019 09:21:04.4060	1755
Mon Nov 18 2019 09:21:14.4060	1760
Mon Nov 18 2019 09:21:24.4060	1764
Mon Nov 18 2019 09:21:34.4060	1766
Mon Nov 18 2019 09:21:44.4060	1768
Mon Nov 18 2019 09:21:54.4060	1768
Mon Nov 18 2019 09:22:04.4060	1769
Mon Nov 18 2019 09:22:14.4060	1769
Mon Nov 18 2019 09:22:24.4060	1770
Mon Nov 18 2019 09:22:34.4060	1770
Mon Nov 18 2019 09:22:44.4060	1770
Mon Nov 18 2019 09:22:54.4060	1770
Mon Nov 18 2019 09:23:04.4060	1769
Mon Nov 18 2019 09:23:14.4060	1768
Mon Nov 18 2019 09:23:24.4060	1767
Mon Nov 18 2019 09:23:34.4060	1765
Mon Nov 18 2019 09:23:44.4060	1763
Mon Nov 18 2019 09:23:54.4060	1760
Mon Nov 18 2019 09:24:04.4060	1759
Mon Nov 18 2019 09:24:14.4060	1766
Mon Nov 18 2019 09:24:24.4060	1774
Mon Nov 18 2019 09:24:34.4060	1780
Mon Nov 18 2019 09:24:44.4060	1781
Mon Nov 18 2019 09:24:54.4060	1781
Mon Nov 18 2019 09:25:04.4060	1780
Mon Nov 18 2019 09:25:14.4060	1779
Mon Nov 18 2019 09:25:24.4060	1777
Mon Nov 18 2019 09:25:34.4060	1775
Mon Nov 18 2019 09:25:44.4060	1772
Mon Nov 18 2019 09:25:54.4060	1769
Mon Nov 18 2019 09:26:04.4060	1765
Mon Nov 18 2019 09:26:14.4060	1761
Mon Nov 18 2019 09:26:24.4060	1757
Mon Nov 18 2019 09:26:34.4060	1753

RTO Combustion Chamber Temperature Data - VOM Destruction Efficiency Testing
GII, LLC Chicago Ilinois

Time	RTO Temp 0 - 2000F
Mon Nov 18 2019 09:26:44.4060	1750
Mon Nov 18 2019 09:26:54.4060	1747
Mon Nov 18 2019 09:27:04.4060	1745
Mon Nov 18 2019 09:27:14.4060	1749
Mon Nov 18 2019 09:27:24.4060	1753
Mon Nov 18 2019 09:27:34.4060	1757
Mon Nov 18 2019 09:27:44.4060	1759
Mon Nov 18 2019 09:27:54.4060	1760
Mon Nov 18 2019 09:28:04.4060	1761
Mon Nov 18 2019 09:28:14.4060	1762
Mon Nov 18 2019 09:28:24.4060	1762
Mon Nov 18 2019 09:28:34.4060	1762
Mon Nov 18 2019 09:28:44.4060	1762
Mon Nov 18 2019 09:28:54.4060	1762
Mon Nov 18 2019 09:29:04.4060	1761
Mon Nov 18 2019 09:29:14.4060	1760
Mon Nov 18 2019 09:29:24.4060	1759
Mon Nov 18 2019 09:29:34.4060	1757
Mon Nov 18 2019 09:29:44.4060	1754
Mon Nov 18 2019 09:29:54.4060	1751
Mon Nov 18 2019 09:30:04.4060	1752
Mon Nov 18 2019 09:30:14.4060	1762
Mon Nov 18 2019 09:30:24.4060	1772
Mon Nov 18 2019 09:30:34.4060	1781
Mon Nov 18 2019 09:30:44.4060	1784
Mon Nov 18 2019 09:30:54.4060	1784
Mon Nov 18 2019 09:31:04.4060	1782
Mon Nov 18 2019 09:31:14.4060	1779
Mon Nov 18 2019 09:31:24.4060	1775
Mon Nov 18 2019 09:31:34.4060	1772
Mon Nov 18 2019 09:31:44.4060	1768
Mon Nov 18 2019 09:31:54.4060	1764
Mon Nov 18 2019 09:32:04.4060	1760
Mon Nov 18 2019 09:32:14.4060	1755
Mon Nov 18 2019 09:32:24.4060	1751
Mon Nov 18 2019 09:32:34.4060	1746
Mon Nov 18 2019 09:32:44.4060	1742
Mon Nov 18 2019 09:32:54.4060	1739
Mon Nov 18 2019 09:33:04.4060	1739
Mon Nov 18 2019 09:33:14.4060	1747
Mon Nov 18 2019 09:33:24.4060	1755
Mon Nov 18 2019 09:33:34.4060	1760
Mon Nov 18 2019 09:33:44.4060	1764
Mon Nov 18 2019 09:33:54.4060	1766
Mon Nov 18 2019 09:34:04.4060	1766
Mon Nov 18 2019 09:34:14.4060	1765
Mon Nov 18 2019 09:34:24.4060	1762
Mon Nov 18 2019 09:34:34.4060	1760
Mon Nov 18 2019 09:34:44.4060	1758
Mon Nov 18 2019 09:34:54.4060	1757
Mon Nov 18 2019 09:35:04.4060	1756
Mon Nov 18 2019 09:35:14.4060	1755
Mon Nov 18 2019 09:35:24.4060	1753
Mon Nov 18 2019 09:35:34.4060	1751
Mon Nov 18 2019 09:35:44.4060	1748
Mon Nov 18 2019 09:35:54.4060	1745
Mon Nov 18 2019 09:36:04.4060	1750
Mon Nov 18 2019 09:36:14.4060	1769
Mon Nov 18 2019 09:36:24.4060	1784
Mon Nov 18 2019 09:36:34.4060	1791
Mon Nov 18 2019 09:36:44.4060	1792
Mon Nov 18 2019 09:36:54.4060	1793
Mon Nov 18 2019 09:37:04.4060	1791
Mon Nov 18 2019 09:37:14.4060	1788
Mon Nov 18 2019 09:37:24.4060	1784
Mon Nov 18 2019 09:37:34.4060	1780
Mon Nov 18 2019 09:37:44.4060	1776
Mon Nov 18 2019 09:37:54.4060	1772
Mon Nov 18 2019 09:38:04.4060	1767
Mon Nov 18 2019 09:38:14.4060	1762
Mon Nov 18 2019 09:38:24.4060	1757
Mon Nov 18 2019 09:38:34.4060	1753
Mon Nov 18 2019 09:38:44.4060	1751
Mon Nov 18 2019 09:38:54.4060	1751
Mon Nov 18 2019 09:39:04.4060	1754
Mon Nov 18 2019 09:39:14.4060	1762
Mon Nov 18 2019 09:39:24.4060	1770
Mon Nov 18 2019 09:39:34.4060	1775
Mon Nov 18 2019 09:39:44.4060	1777
Mon Nov 18 2019 09:39:54.4060	1777
Mon Nov 18 2019 09:40:04.4060	1775
Mon Nov 18 2019 09:40:14.4060	1774
Mon Nov 18 2019 09:40:24.4060	1772
Mon Nov 18 2019 09:40:34.4060	1771
Mon Nov 18 2019 09:40:44.4060	1769
Mon Nov 18 2019 09:40:54.4060	1768
Mon Nov 18 2019 09:41:04.4060	1766
Mon Nov 18 2019 09:41:14.4060	1764
Mon Nov 18 2019 09:41:24.4060	1761
Mon Nov 18 2019 09:41:34.4060	1758
Mon Nov 18 2019 09:41:44.4060	1754
Mon Nov 18 2019 09:41:54.4060	1750
Mon Nov 18 2019 09:42:04.4060	1753
Mon Nov 18 2019 09:42:14.4060	1772
Mon Nov 18 2019 09:42:24.4060	1788
Mon Nov 18 2019 09:42:34.4060	1795
Mon Nov 18 2019 09:42:44.4060	1798
Mon Nov 18 2019 09:42:54.4060	1798
Mon Nov 18 2019 09:43:04.4060	1798
Mon Nov 18 2019 09:43:14.4060	1796
Mon Nov 18 2019 09:43:24.4060	1792
Mon Nov 18 2019 09:43:34.4060	1788
Mon Nov 18 2019 09:43:44.4060	1783
Mon Nov 18 2019 09:43:54.4060	1778
Mon Nov 18 2019 09:44:04.4060	1773
Mon Nov 18 2019 09:44:14.4060	1766
Mon Nov 18 2019 09:44:24.4060	1761

RTO Combustion Chamber Temperature Data - VOM Destruction Efficiency Testing
GII, LLC Chicago Ilinois

Time	RTO Temp 0 - 2000F
Mon Nov 18 2019 09:44:34.4060	1757
Mon Nov 18 2019 09:44:44.4060	1755
Mon Nov 18 2019 09:44:54.4060	1755
Mon Nov 18 2019 09:45:04.4060	1758
Mon Nov 18 2019 09:45:14.4060	1767
Mon Nov 18 2019 09:45:24.4060	1775
Mon Nov 18 2019 09:45:34.4060	1779
Mon Nov 18 2019 09:45:44.4060	1781
Mon Nov 18 2019 09:45:54.4060	1781
Mon Nov 18 2019 09:46:04.4060	1781
Mon Nov 18 2019 09:46:14.4060	1782
Mon Nov 18 2019 09:46:24.4060	1781
Mon Nov 18 2019 09:46:34.4060	1780
Mon Nov 18 2019 09:46:44.4060	1780
Mon Nov 18 2019 09:46:54.4060	1779
Mon Nov 18 2019 09:47:04.4060	1775
Mon Nov 18 2019 09:47:14.4060	1773
Mon Nov 18 2019 09:47:24.4060	1771
Mon Nov 18 2019 09:47:34.4060	1768
Mon Nov 18 2019 09:47:44.4060	1765
Mon Nov 18 2019 09:47:54.4060	1761
Mon Nov 18 2019 09:48:04.4060	1763
Mon Nov 18 2019 09:48:14.4060	1776
Mon Nov 18 2019 09:48:24.4060	1789
Mon Nov 18 2019 09:48:34.4060	1799
Mon Nov 18 2019 09:48:44.4060	1801
Mon Nov 18 2019 09:48:54.4060	1801
Mon Nov 18 2019 09:49:04.4060	1799
Mon Nov 18 2019 09:49:14.4060	1796
Mon Nov 18 2019 09:49:24.4060	1793
Mon Nov 18 2019 09:49:34.4060	1789
Mon Nov 18 2019 09:49:44.4060	1784
Mon Nov 18 2019 09:49:54.4060	1779
Mon Nov 18 2019 09:50:04.4060	1773
Mon Nov 18 2019 09:50:14.4060	1767
Mon Nov 18 2019 09:50:24.4060	1761
Mon Nov 18 2019 09:50:34.4060	1755
Mon Nov 18 2019 09:50:44.4060	1752
Mon Nov 18 2019 09:50:54.4060	1749
Mon Nov 18 2019 09:51:04.4060	1748
Mon Nov 18 2019 09:51:14.4060	1755
Mon Nov 18 2019 09:51:24.4060	1762
Mon Nov 18 2019 09:51:34.4060	1767
Mon Nov 18 2019 09:51:44.4060	1770
Mon Nov 18 2019 09:51:54.4060	1771
Mon Nov 18 2019 09:52:04.4060	1772
Mon Nov 18 2019 09:52:14.4060	1772
Mon Nov 18 2019 09:52:24.4060	1772
Mon Nov 18 2019 09:52:34.4060	1772
Mon Nov 18 2019 09:52:44.4060	1772
Mon Nov 18 2019 09:52:54.4060	1771
Mon Nov 18 2019 09:53:04.4060	1769
Mon Nov 18 2019 09:53:14.4060	1768
Mon Nov 18 2019 09:53:24.4060	1765
Mon Nov 18 2019 09:53:34.4060	1762
Mon Nov 18 2019 09:53:44.4060	1760
Mon Nov 18 2019 09:53:54.4060	1757
Mon Nov 18 2019 09:54:04.4060	1758
Mon Nov 18 2019 09:54:14.4060	1770
Mon Nov 18 2019 09:54:24.4060	1781
Mon Nov 18 2019 09:54:34.4060	1788
Mon Nov 18 2019 09:54:44.4060	1792
Mon Nov 18 2019 09:54:54.4060	1792
Mon Nov 18 2019 09:55:04.4060	1791
Mon Nov 18 2019 09:55:14.4060	1789
Mon Nov 18 2019 09:55:24.4060	1786
Mon Nov 18 2019 09:55:34.4060	1783
Mon Nov 18 2019 09:55:44.4060	1780
Mon Nov 18 2019 09:55:54.4060	1776
Mon Nov 18 2019 09:56:04.4060	1771
Mon Nov 18 2019 09:56:14.4060	1766
Mon Nov 18 2019 09:56:24.4060	1760
Mon Nov 18 2019 09:56:34.4060	1754
Mon Nov 18 2019 09:56:44.4060	1748
Mon Nov 18 2019 09:56:54.4060	1744
Mon Nov 18 2019 09:57:04.4060	1744
Mon Nov 18 2019 09:57:14.4060	1750
Mon Nov 18 2019 09:57:24.4060	1756
Mon Nov 18 2019 09:57:34.4060	1761
Mon Nov 18 2019 09:57:44.4060	1764
Mon Nov 18 2019 09:57:54.4060	1766
Mon Nov 18 2019 09:58:04.4060	1768
Mon Nov 18 2019 09:58:14.4060	1769
Mon Nov 18 2019 09:58:24.4060	1769
Mon Nov 18 2019 09:58:34.4060	1770
Mon Nov 18 2019 09:58:44.4060	1769
Mon Nov 18 2019 09:58:54.4060	1769
Mon Nov 18 2019 09:59:04.4060	1767
Mon Nov 18 2019 09:59:14.4060	1766
Mon Nov 18 2019 09:59:24.4060	1764
Mon Nov 18 2019 09:59:34.4060	1762
Mon Nov 18 2019 09:59:44.4060	1760
Mon Nov 18 2019 09:59:54.4060	1758
Mon Nov 18 2019 10:00:04.4060	1759
Mon Nov 18 2019 10:00:14.4060	1770
Mon Nov 18 2019 10:00:24.4060	1781
Mon Nov 18 2019 10:00:34.4060	1787
Mon Nov 18 2019 10:00:44.4060	1789
Mon Nov 18 2019 10:00:54.4060	1788
Mon Nov 18 2019 10:01:04.4060	1787
Mon Nov 18 2019 10:01:14.4060	1786
Mon Nov 18 2019 10:01:24.4060	1783
Mon Nov 18 2019 10:01:34.4060	1780
Mon Nov 18 2019 10:01:44.4060	1777
Mon Nov 18 2019 10:01:54.4060	1774
Mon Nov 18 2019 10:02:04.4060	1770
Mon Nov 18 2019 10:02:14.4060	1765

RTO Combustion Chamber Temperature Data - VOM Destruction Efficiency Testing
GII, LLC Chicago Ilinois

Time	RTO Temp 0 - 2000F
Mon Nov 18 2019 10:02:24.4060	1760
Mon Nov 18 2019 10:02:34.4060	1755
Mon Nov 18 2019 10:02:44.4060	1749
Mon Nov 18 2019 10:02:54.4060	1743
Mon Nov 18 2019 10:03:04.4060	1742
Mon Nov 18 2019 10:03:14.4060	1747
Mon Nov 18 2019 10:03:24.4060	1753
Mon Nov 18 2019 10:03:34.4060	1759
Mon Nov 18 2019 10:03:44.4060	1762
Mon Nov 18 2019 10:03:54.4060	1764
Mon Nov 18 2019 10:04:04.4060	1765
Mon Nov 18 2019 10:04:14.4060	1765
Mon Nov 18 2019 10:04:24.4060	1765
Mon Nov 18 2019 10:04:34.4060	1766
Mon Nov 18 2019 10:04:44.4060	1766
Mon Nov 18 2019 10:04:54.4060	1766
Mon Nov 18 2019 10:05:04.4060	1766
Mon Nov 18 2019 10:05:14.4060	1765
Mon Nov 18 2019 10:05:24.4060	1764
Mon Nov 18 2019 10:05:34.4060	1762
Mon Nov 18 2019 10:05:44.4060	1760
Mon Nov 18 2019 10:05:54.4060	1757
Mon Nov 18 2019 10:06:04.4060	1758
Mon Nov 18 2019 10:06:14.4060	1769
Mon Nov 18 2019 10:06:24.4060	1778
Mon Nov 18 2019 10:06:34.4060	1784
Mon Nov 18 2019 10:06:44.4060	1786
Mon Nov 18 2019 10:06:54.4060	1785
Mon Nov 18 2019 10:07:04.4060	1785
Mon Nov 18 2019 10:07:14.4060	1783
Mon Nov 18 2019 10:07:24.4060	1782
Mon Nov 18 2019 10:07:34.4060	1780
Mon Nov 18 2019 10:07:44.4060	1777
Mon Nov 18 2019 10:07:54.4060	1774
Mon Nov 18 2019 10:08:04.4060	1771
Mon Nov 18 2019 10:08:14.4060	1768
Mon Nov 18 2019 10:08:24.4060	1764
Mon Nov 18 2019 10:08:34.4060	1761
Mon Nov 18 2019 10:08:44.4060	1757
Mon Nov 18 2019 10:08:54.4060	1753
Mon Nov 18 2019 10:09:04.4060	1749
Mon Nov 18 2019 10:09:14.4060	1752
Mon Nov 18 2019 10:09:24.4060	1756
Mon Nov 18 2019 10:09:34.4060	1759
Mon Nov 18 2019 10:09:44.4060	1762
Mon Nov 18 2019 10:09:54.4060	1763
Mon Nov 18 2019 10:10:04.4060	1765
Mon Nov 18 2019 10:10:14.4060	1766
Mon Nov 18 2019 10:10:24.4060	1766
Mon Nov 18 2019 10:10:34.4060	1767
Mon Nov 18 2019 10:10:44.4060	1767
Mon Nov 18 2019 10:10:54.4060	1766
Mon Nov 18 2019 10:11:04.4060	1765
Mon Nov 18 2019 10:11:14.4060	1764
Mon Nov 18 2019 10:11:24.4060	1763
Mon Nov 18 2019 10:11:34.4060	1761
Mon Nov 18 2019 10:11:44.4060	1758

RTO Combustion Chamber Temperature Data - VOM Destruction Efficiency Testing
GII, LLC Chicago Ilinois

	Time	RTO Temp 0 - 2000F
11-18-19	Mon Nov 18 2019 11:22:04.4060	1773
Run 3	Mon Nov 18 2019 11:22:14.4060	1772
	Mon Nov 18 2019 11:22:24.4060	1770
Time:	Mon Nov 18 2019 11:22:34.4060	1768
11:22 AM -	Mon Nov 18 2019 11:22:44.4060	1767
12:46 AM	Mon Nov 18 2019 11:22:54.4060	1765
	Mon Nov 18 2019 11:23:04.4060	1764
	Mon Nov 18 2019 11:23:14.4060	1761
	Mon Nov 18 2019 11:23:24.4060	1757
	Mon Nov 18 2019 11:23:34.4060	1753
	Mon Nov 18 2019 11:23:44.4060	1749
	Mon Nov 18 2019 11:23:54.4060	1745
	Mon Nov 18 2019 11:24:04.4060	1748
	Mon Nov 18 2019 11:24:14.4060	1770
	Mon Nov 18 2019 11:24:24.4060	1788
	Mon Nov 18 2019 11:24:34.4060	1796
	Mon Nov 18 2019 11:24:44.4060	1800
	Mon Nov 18 2019 11:24:54.4060	1801
	Mon Nov 18 2019 11:25:04.4060	1802
	Mon Nov 18 2019 11:25:14.4060	1802
	Mon Nov 18 2019 11:25:24.4060	1801
	Mon Nov 18 2019 11:25:34.4060	1799
	Mon Nov 18 2019 11:25:44.4060	1796
	Mon Nov 18 2019 11:25:54.4060	1792
	Mon Nov 18 2019 11:26:04.4060	1788
	Mon Nov 18 2019 11:26:14.4060	1783
	Mon Nov 18 2019 11:26:24.4060	1778
	Mon Nov 18 2019 11:26:34.4060	1774
	Mon Nov 18 2019 11:26:44.4060	1771
	Mon Nov 18 2019 11:26:54.4060	1769
	Mon Nov 18 2019 11:27:04.4060	1769
	Mon Nov 18 2019 11:27:14.4060	1773
	Mon Nov 18 2019 11:27:24.4060	1778
	Mon Nov 18 2019 11:27:34.4060	1781
	Mon Nov 18 2019 11:27:44.4060	1782
	Mon Nov 18 2019 11:27:54.4060	1782
	Mon Nov 18 2019 11:28:04.4060	1781
	Mon Nov 18 2019 11:28:14.4060	1780
	Mon Nov 18 2019 11:28:24.4060	1779
	Mon Nov 18 2019 11:28:34.4060	1778
	Mon Nov 18 2019 11:28:44.4060	1777
	Mon Nov 18 2019 11:28:54.4060	1775
	Mon Nov 18 2019 11:29:04.4060	1773
	Mon Nov 18 2019 11:29:14.4060	1770
	Mon Nov 18 2019 11:29:24.4060	1767
	Mon Nov 18 2019 11:29:34.4060	1764
	Mon Nov 18 2019 11:29:44.4060	1760
	Mon Nov 18 2019 11:29:54.4060	1756
	Mon Nov 18 2019 11:30:04.4060	1758
	Mon Nov 18 2019 11:30:14.4060	1774
	Mon Nov 18 2019 11:30:24.4060	1787
	Mon Nov 18 2019 11:30:34.4060	1794
	Mon Nov 18 2019 11:30:44.4060	1796
	Mon Nov 18 2019 11:30:54.4060	1797
	Mon Nov 18 2019 11:31:04.4060	1797
	Mon Nov 18 2019 11:31:14.4060	1796
	Mon Nov 18 2019 11:31:24.4060	1794
	Mon Nov 18 2019 11:31:34.4060	1791
	Mon Nov 18 2019 11:31:44.4060	1788
	Mon Nov 18 2019 11:31:54.4060	1784
	Mon Nov 18 2019 11:32:04.4060	1781
	Mon Nov 18 2019 11:32:14.4060	1777
	Mon Nov 18 2019 11:32:24.4060	1772
	Mon Nov 18 2019 11:32:34.4060	1765
	Mon Nov 18 2019 11:32:44.4060	1758
	Mon Nov 18 2019 11:32:54.4060	1751
	Mon Nov 18 2019 11:33:04.4060	1748
	Mon Nov 18 2019 11:33:14.4060	1753
	Mon Nov 18 2019 11:33:24.4060	1758
	Mon Nov 18 2019 11:33:34.4060	1764
	Mon Nov 18 2019 11:33:44.4060	1768
	Mon Nov 18 2019 11:33:54.4060	1770
	Mon Nov 18 2019 11:34:04.4060	1770
	Mon Nov 18 2019 11:34:14.4060	1770
	Mon Nov 18 2019 11:34:24.4060	1771
	Mon Nov 18 2019 11:34:34.4060	1771
	Mon Nov 18 2019 11:34:44.4060	1771
	Mon Nov 18 2019 11:34:54.4060	1770
	Mon Nov 18 2019 11:35:04.4060	1770
	Mon Nov 18 2019 11:35:14.4060	1768
	Mon Nov 18 2019 11:35:24.4060	1766
	Mon Nov 18 2019 11:35:34.4060	1763
	Mon Nov 18 2019 11:35:44.4060	1760
	Mon Nov 18 2019 11:35:54.4060	1755
	Mon Nov 18 2019 11:36:04.4060	1755
	Mon Nov 18 2019 11:36:14.4060	1767

RTO Combustion Chamber Temperature Data - VOM Destruction Efficiency Testing
GII, LLC Chicago Ilinois

Time	RTO Temp 0 - 2000F
Mon Nov 18 2019 11:36:24.4060	1779
Mon Nov 18 2019 11:36:34.4060	1786
Mon Nov 18 2019 11:36:44.4060	1791
Mon Nov 18 2019 11:36:54.4060	1793
Mon Nov 18 2019 11:37:04.4060	1792
Mon Nov 18 2019 11:37:14.4060	1790
Mon Nov 18 2019 11:37:24.4060	1788
Mon Nov 18 2019 11:37:34.4060	1785
Mon Nov 18 2019 11:37:44.4060	1781
Mon Nov 18 2019 11:37:54.4060	1777
Mon Nov 18 2019 11:38:04.4060	1772
Mon Nov 18 2019 11:38:14.4060	1768
Mon Nov 18 2019 11:38:24.4060	1762
Mon Nov 18 2019 11:38:34.4060	1758
Mon Nov 18 2019 11:38:44.4060	1752
Mon Nov 18 2019 11:38:54.4060	1746
Mon Nov 18 2019 11:39:04.4060	1744
Mon Nov 18 2019 11:39:14.4060	1749
Mon Nov 18 2019 11:39:24.4060	1756
Mon Nov 18 2019 11:39:34.4060	1761
Mon Nov 18 2019 11:39:44.4060	1764
Mon Nov 18 2019 11:39:54.4060	1765
Mon Nov 18 2019 11:40:04.4060	1764
Mon Nov 18 2019 11:40:14.4060	1764
Mon Nov 18 2019 11:40:24.4060	1765
Mon Nov 18 2019 11:40:34.4060	1765
Mon Nov 18 2019 11:40:44.4060	1765
Mon Nov 18 2019 11:40:54.4060	1764
Mon Nov 18 2019 11:41:04.4060	1763
Mon Nov 18 2019 11:41:14.4060	1761
Mon Nov 18 2019 11:41:24.4060	1759
Mon Nov 18 2019 11:41:34.4060	1757
Mon Nov 18 2019 11:41:44.4060	1754
Mon Nov 18 2019 11:41:54.4060	1751
Mon Nov 18 2019 11:42:04.4060	1751
Mon Nov 18 2019 11:42:14.4060	1765
Mon Nov 18 2019 11:42:24.4060	1777
Mon Nov 18 2019 11:42:34.4060	1783
Mon Nov 18 2019 11:42:44.4060	1787
Mon Nov 18 2019 11:42:54.4060	1789
Mon Nov 18 2019 11:43:04.4060	1788
Mon Nov 18 2019 11:43:14.4060	1787
Mon Nov 18 2019 11:43:24.4060	1786
Mon Nov 18 2019 11:43:34.4060	1783
Mon Nov 18 2019 11:43:44.4060	1780
Mon Nov 18 2019 11:43:54.4060	1776
Mon Nov 18 2019 11:44:04.4060	1772
Mon Nov 18 2019 11:44:14.4060	1767
Mon Nov 18 2019 11:44:24.4060	1762
Mon Nov 18 2019 11:44:34.4060	1758
Mon Nov 18 2019 11:44:44.4060	1754
Mon Nov 18 2019 11:44:54.4060	1751
Mon Nov 18 2019 11:45:04.4060	1750
Mon Nov 18 2019 11:45:14.4060	1754
Mon Nov 18 2019 11:45:24.4060	1758
Mon Nov 18 2019 11:45:34.4060	1762
Mon Nov 18 2019 11:45:44.4060	1764
Mon Nov 18 2019 11:45:54.4060	1765
Mon Nov 18 2019 11:46:04.4060	1766
Mon Nov 18 2019 11:46:14.4060	1767
Mon Nov 18 2019 11:46:24.4060	1767
Mon Nov 18 2019 11:46:34.4060	1767
Mon Nov 18 2019 11:46:44.4060	1767
Mon Nov 18 2019 11:46:54.4060	1766
Mon Nov 18 2019 11:47:04.4060	1765
Mon Nov 18 2019 11:47:14.4060	1764
Mon Nov 18 2019 11:47:24.4060	1762
Mon Nov 18 2019 11:47:34.4060	1760
Mon Nov 18 2019 11:47:44.4060	1757
Mon Nov 18 2019 11:47:54.4060	1754
Mon Nov 18 2019 11:48:04.4060	1754
Mon Nov 18 2019 11:48:14.4060	1765
Mon Nov 18 2019 11:48:24.4060	1777
Mon Nov 18 2019 11:48:34.4060	1787
Mon Nov 18 2019 11:48:44.4060	1791
Mon Nov 18 2019 11:48:54.4060	1790
Mon Nov 18 2019 11:49:04.4060	1789
Mon Nov 18 2019 11:49:14.4060	1788
Mon Nov 18 2019 11:49:24.4060	1785
Mon Nov 18 2019 11:49:34.4060	1782
Mon Nov 18 2019 11:49:44.4060	1778
Mon Nov 18 2019 11:49:54.4060	1774
Mon Nov 18 2019 11:50:04.4060	1770
Mon Nov 18 2019 11:50:14.4060	1765
Mon Nov 18 2019 11:50:24.4060	1759
Mon Nov 18 2019 11:50:34.4060	1754

RTO Combustion Chamber Temperature Data - VOM Destruction Efficiency Testing
GII, LLC Chicago Ilinois

Time	RTO Temp 0 - 2000F
Mon Nov 18 2019 11:50:44.4060	1749
Mon Nov 18 2019 11:50:54.4060	1744
Mon Nov 18 2019 11:51:04.4060	1743
Mon Nov 18 2019 11:51:14.4060	1747
Mon Nov 18 2019 11:51:24.4060	1752
Mon Nov 18 2019 11:51:34.4060	1758
Mon Nov 18 2019 11:51:44.4060	1762
Mon Nov 18 2019 11:51:54.4060	1764
Mon Nov 18 2019 11:52:04.4060	1765
Mon Nov 18 2019 11:52:14.4060	1765
Mon Nov 18 2019 11:52:24.4060	1766
Mon Nov 18 2019 11:52:34.4060	1766
Mon Nov 18 2019 11:52:44.4060	1766
Mon Nov 18 2019 11:52:54.4060	1766
Mon Nov 18 2019 11:53:04.4060	1766
Mon Nov 18 2019 11:53:14.4060	1766
Mon Nov 18 2019 11:53:24.4060	1766
Mon Nov 18 2019 11:53:34.4060	1765
Mon Nov 18 2019 11:53:44.4060	1763
Mon Nov 18 2019 11:53:54.4060	1761
Mon Nov 18 2019 11:54:04.4060	1759
Mon Nov 18 2019 11:54:14.4060	1766
Mon Nov 18 2019 11:54:24.4060	1773
Mon Nov 18 2019 11:54:34.4060	1780
Mon Nov 18 2019 11:54:44.4060	1782
Mon Nov 18 2019 11:54:54.4060	1783
Mon Nov 18 2019 11:55:04.4060	1782
Mon Nov 18 2019 11:55:14.4060	1781
Mon Nov 18 2019 11:55:24.4060	1779
Mon Nov 18 2019 11:55:34.4060	1777
Mon Nov 18 2019 11:55:44.4060	1775
Mon Nov 18 2019 11:55:54.4060	1772
Mon Nov 18 2019 11:56:04.4060	1767
Mon Nov 18 2019 11:56:14.4060	1762
Mon Nov 18 2019 11:56:24.4060	1758
Mon Nov 18 2019 11:56:34.4060	1754
Mon Nov 18 2019 11:56:44.4060	1748
Mon Nov 18 2019 11:56:54.4060	1743
Mon Nov 18 2019 11:57:04.4060	1743
Mon Nov 18 2019 11:57:14.4060	1747
Mon Nov 18 2019 11:57:24.4060	1752
Mon Nov 18 2019 11:57:34.4060	1756
Mon Nov 18 2019 11:57:44.4060	1758
Mon Nov 18 2019 11:57:54.4060	1760
Mon Nov 18 2019 11:58:04.4060	1761
Mon Nov 18 2019 11:58:14.4060	1761
Mon Nov 18 2019 11:58:24.4060	1761
Mon Nov 18 2019 11:58:34.4060	1762
Mon Nov 18 2019 11:58:44.4060	1762
Mon Nov 18 2019 11:58:54.4060	1762
Mon Nov 18 2019 11:59:04.4060	1762
Mon Nov 18 2019 11:59:14.4060	1761
Mon Nov 18 2019 11:59:24.4060	1760
Mon Nov 18 2019 11:59:34.4060	1759
Mon Nov 18 2019 11:59:44.4060	1758
Mon Nov 18 2019 11:59:54.4060	1755
Mon Nov 18 2019 12:00:04.4060	1754
Mon Nov 18 2019 12:00:14.4060	1763
Mon Nov 18 2019 12:00:24.4060	1773
Mon Nov 18 2019 12:00:34.4060	1781
Mon Nov 18 2019 12:00:44.4060	1786
Mon Nov 18 2019 12:00:54.4060	1786
Mon Nov 18 2019 12:01:04.4060	1784
Mon Nov 18 2019 12:01:14.4060	1781
Mon Nov 18 2019 12:01:24.4060	1778
Mon Nov 18 2019 12:01:34.4060	1774
Mon Nov 18 2019 12:01:44.4060	1771
Mon Nov 18 2019 12:01:54.4060	1766
Mon Nov 18 2019 12:02:04.4060	1762
Mon Nov 18 2019 12:02:14.4060	1757
Mon Nov 18 2019 12:02:24.4060	1752
Mon Nov 18 2019 12:02:34.4060	1746
Mon Nov 18 2019 12:02:44.4060	1741
Mon Nov 18 2019 12:02:54.4060	1738
Mon Nov 18 2019 12:03:04.4060	1737
Mon Nov 18 2019 12:03:14.4060	1744
Mon Nov 18 2019 12:03:24.4060	1750
Mon Nov 18 2019 12:03:34.4060	1757
Mon Nov 18 2019 12:03:44.4060	1761
Mon Nov 18 2019 12:03:54.4060	1763
Mon Nov 18 2019 12:04:04.4060	1763
Mon Nov 18 2019 12:04:14.4060	1762
Mon Nov 18 2019 12:04:24.4060	1761
Mon Nov 18 2019 12:04:34.4060	1759
Mon Nov 18 2019 12:04:44.4060	1758
Mon Nov 18 2019 12:04:54.4060	1757

RTO Combustion Chamber Temperature Data - VOM Destruction Efficiency Testing
GII, LLC Chicago Ilinois

Time	RTO Temp 0 - 2000F
Mon Nov 18 2019 12:05:04.4060	1756
Mon Nov 18 2019 12:05:14.4060	1754
Mon Nov 18 2019 12:05:24.4060	1752
Mon Nov 18 2019 12:05:34.4060	1750
Mon Nov 18 2019 12:05:44.4060	1747
Mon Nov 18 2019 12:05:54.4060	1744
Mon Nov 18 2019 12:06:04.4060	1746
Mon Nov 18 2019 12:06:14.4060	1763
Mon Nov 18 2019 12:06:24.4060	1777
Mon Nov 18 2019 12:06:34.4060	1789
Mon Nov 18 2019 12:06:44.4060	1795
Mon Nov 18 2019 12:06:54.4060	1795
Mon Nov 18 2019 12:07:04.4060	1793
Mon Nov 18 2019 12:07:14.4060	1789
Mon Nov 18 2019 12:07:24.4060	1785
Mon Nov 18 2019 12:07:34.4060	1781
Mon Nov 18 2019 12:07:44.4060	1776
Mon Nov 18 2019 12:07:54.4060	1771
Mon Nov 18 2019 12:08:04.4060	1767
Mon Nov 18 2019 12:08:14.4060	1762
Mon Nov 18 2019 12:08:24.4060	1757
Mon Nov 18 2019 12:08:34.4060	1753
Mon Nov 18 2019 12:08:44.4060	1750
Mon Nov 18 2019 12:08:54.4060	1747
Mon Nov 18 2019 12:09:04.4060	1747
Mon Nov 18 2019 12:09:14.4060	1757
Mon Nov 18 2019 12:09:24.4060	1765
Mon Nov 18 2019 12:09:34.4060	1771
Mon Nov 18 2019 12:09:44.4060	1773
Mon Nov 18 2019 12:09:54.4060	1773
Mon Nov 18 2019 12:10:04.4060	1772
Mon Nov 18 2019 12:10:14.4060	1770
Mon Nov 18 2019 12:10:24.4060	1769
Mon Nov 18 2019 12:10:34.4060	1767
Mon Nov 18 2019 12:10:44.4060	1766
Mon Nov 18 2019 12:10:54.4060	1765
Mon Nov 18 2019 12:11:04.4060	1764
Mon Nov 18 2019 12:11:14.4060	1762
Mon Nov 18 2019 12:11:24.4060	1760
Mon Nov 18 2019 12:11:34.4060	1757
Mon Nov 18 2019 12:11:44.4060	1754
Mon Nov 18 2019 12:11:54.4060	1751
Mon Nov 18 2019 12:12:04.4060	1756
Mon Nov 18 2019 12:12:14.4060	1778
Mon Nov 18 2019 12:12:24.4060	1796
Mon Nov 18 2019 12:12:34.4060	1804
Mon Nov 18 2019 12:12:44.4060	1805
Mon Nov 18 2019 12:12:54.4060	1805
Mon Nov 18 2019 12:13:04.4060	1804
Mon Nov 18 2019 12:13:14.4060	1802
Mon Nov 18 2019 12:13:24.4060	1799
Mon Nov 18 2019 12:13:34.4060	1796
Mon Nov 18 2019 12:13:44.4060	1793
Mon Nov 18 2019 12:13:54.4060	1789
Mon Nov 18 2019 12:14:04.4060	1785
Mon Nov 18 2019 12:14:14.4060	1780
Mon Nov 18 2019 12:14:24.4060	1775
Mon Nov 18 2019 12:14:34.4060	1770
Mon Nov 18 2019 12:14:44.4060	1765
Mon Nov 18 2019 12:14:54.4060	1760
Mon Nov 18 2019 12:15:04.4060	1758
Mon Nov 18 2019 12:15:14.4060	1763
Mon Nov 18 2019 12:15:24.4060	1768
Mon Nov 18 2019 12:15:34.4060	1772
Mon Nov 18 2019 12:15:44.4060	1775
Mon Nov 18 2019 12:15:54.4060	1776
Mon Nov 18 2019 12:16:04.4060	1777
Mon Nov 18 2019 12:16:14.4060	1777
Mon Nov 18 2019 12:16:24.4060	1777
Mon Nov 18 2019 12:16:34.4060	1777
Mon Nov 18 2019 12:16:44.4060	1776
Mon Nov 18 2019 12:16:54.4060	1775
Mon Nov 18 2019 12:17:04.4060	1774
Mon Nov 18 2019 12:17:14.4060	1773
Mon Nov 18 2019 12:17:24.4060	1770
Mon Nov 18 2019 12:17:34.4060	1768
Mon Nov 18 2019 12:17:44.4060	1764
Mon Nov 18 2019 12:17:54.4060	1760
Mon Nov 18 2019 12:18:04.4060	1760
Mon Nov 18 2019 12:18:14.4060	1772
Mon Nov 18 2019 12:18:24.4060	1785
Mon Nov 18 2019 12:18:34.4060	1794
Mon Nov 18 2019 12:18:44.4060	1798
Mon Nov 18 2019 12:18:54.4060	1799
Mon Nov 18 2019 12:19:04.4060	1797
Mon Nov 18 2019 12:19:14.4060	1794

RTO Combustion Chamber Temperature Data - VOM Destruction Efficiency Testing
GII, LLC Chicago Ilinois

Time	RTO Temp 0 - 2000F
Mon Nov 18 2019 12:19:24.4060	1790
Mon Nov 18 2019 12:19:34.4060	1786
Mon Nov 18 2019 12:19:44.4060	1782
Mon Nov 18 2019 12:19:54.4060	1778
Mon Nov 18 2019 12:20:04.4060	1775
Mon Nov 18 2019 12:20:14.4060	1771
Mon Nov 18 2019 12:20:24.4060	1766
Mon Nov 18 2019 12:20:34.4060	1761
Mon Nov 18 2019 12:20:44.4060	1756
Mon Nov 18 2019 12:20:54.4060	1752
Mon Nov 18 2019 12:21:04.4060	1750
Mon Nov 18 2019 12:21:14.4060	1754
Mon Nov 18 2019 12:21:24.4060	1758
Mon Nov 18 2019 12:21:34.4060	1762
Mon Nov 18 2019 12:21:44.4060	1765
Mon Nov 18 2019 12:21:54.4060	1766
Mon Nov 18 2019 12:22:04.4060	1767
Mon Nov 18 2019 12:22:14.4060	1768
Mon Nov 18 2019 12:22:24.4060	1768
Mon Nov 18 2019 12:22:34.4060	1768
Mon Nov 18 2019 12:22:44.4060	1768
Mon Nov 18 2019 12:22:54.4060	1768
Mon Nov 18 2019 12:23:04.4060	1767
Mon Nov 18 2019 12:23:14.4060	1766
Mon Nov 18 2019 12:23:24.4060	1764
Mon Nov 18 2019 12:23:34.4060	1762
Mon Nov 18 2019 12:23:44.4060	1759
Mon Nov 18 2019 12:23:54.4060	1755
Mon Nov 18 2019 12:24:04.4060	1756
Mon Nov 18 2019 12:24:14.4060	1767
Mon Nov 18 2019 12:24:24.4060	1780
Mon Nov 18 2019 12:24:34.4060	1789
Mon Nov 18 2019 12:24:44.4060	1793
Mon Nov 18 2019 12:24:54.4060	1792
Mon Nov 18 2019 12:25:04.4060	1790
Mon Nov 18 2019 12:25:14.4060	1788
Mon Nov 18 2019 12:25:24.4060	1785
Mon Nov 18 2019 12:25:34.4060	1782
Mon Nov 18 2019 12:25:44.4060	1778
Mon Nov 18 2019 12:25:54.4060	1774
Mon Nov 18 2019 12:26:04.4060	1769
Mon Nov 18 2019 12:26:14.4060	1764
Mon Nov 18 2019 12:26:24.4060	1759
Mon Nov 18 2019 12:26:34.4060	1753
Mon Nov 18 2019 12:26:44.4060	1748
Mon Nov 18 2019 12:26:54.4060	1745
Mon Nov 18 2019 12:27:04.4060	1744
Mon Nov 18 2019 12:27:14.4060	1749
Mon Nov 18 2019 12:27:24.4060	1754
Mon Nov 18 2019 12:27:34.4060	1758
Mon Nov 18 2019 12:27:44.4060	1761
Mon Nov 18 2019 12:27:54.4060	1763
Mon Nov 18 2019 12:28:04.4060	1764
Mon Nov 18 2019 12:28:14.4060	1764
Mon Nov 18 2019 12:28:24.4060	1764
Mon Nov 18 2019 12:28:34.4060	1764
Mon Nov 18 2019 12:28:44.4060	1764
Mon Nov 18 2019 12:28:54.4060	1764
Mon Nov 18 2019 12:29:04.4060	1763
Mon Nov 18 2019 12:29:14.4060	1762
Mon Nov 18 2019 12:29:24.4060	1761
Mon Nov 18 2019 12:29:34.4060	1759
Mon Nov 18 2019 12:29:44.4060	1756
Mon Nov 18 2019 12:29:54.4060	1753
Mon Nov 18 2019 12:30:04.4060	1754
Mon Nov 18 2019 12:30:14.4060	1766
Mon Nov 18 2019 12:30:24.4060	1781
Mon Nov 18 2019 12:30:34.4060	1792
Mon Nov 18 2019 12:30:44.4060	1796
Mon Nov 18 2019 12:30:54.4060	1795
Mon Nov 18 2019 12:31:04.4060	1793
Mon Nov 18 2019 12:31:14.4060	1790
Mon Nov 18 2019 12:31:24.4060	1787
Mon Nov 18 2019 12:31:34.4060	1784
Mon Nov 18 2019 12:31:44.4060	1780
Mon Nov 18 2019 12:31:54.4060	1775
Mon Nov 18 2019 12:32:04.4060	1770
Mon Nov 18 2019 12:32:14.4060	1765
Mon Nov 18 2019 12:32:24.4060	1762
Mon Nov 18 2019 12:32:34.4060	1757
Mon Nov 18 2019 12:32:44.4060	1752
Mon Nov 18 2019 12:32:54.4060	1748
Mon Nov 18 2019 12:33:04.4060	1746
Mon Nov 18 2019 12:33:14.4060	1750
Mon Nov 18 2019 12:33:24.4060	1756
Mon Nov 18 2019 12:33:34.4060	1760

RTO Combustion Chamber Temperature Data - VOM Destruction Efficiency Testing
GII, LLC Chicago Ilinois

Time	RTO Temp 0 - 2000F
Mon Nov 18 2019 12:33:44.4060	1763
Mon Nov 18 2019 12:33:54.4060	1765
Mon Nov 18 2019 12:34:04.4060	1766
Mon Nov 18 2019 12:34:14.4060	1766
Mon Nov 18 2019 12:34:24.4060	1766
Mon Nov 18 2019 12:34:34.4060	1766
Mon Nov 18 2019 12:34:44.4060	1766
Mon Nov 18 2019 12:34:54.4060	1765
Mon Nov 18 2019 12:35:04.4060	1764
Mon Nov 18 2019 12:35:14.4060	1763
Mon Nov 18 2019 12:35:24.4060	1762
Mon Nov 18 2019 12:35:34.4060	1761
Mon Nov 18 2019 12:35:44.4060	1759
Mon Nov 18 2019 12:35:54.4060	1756
Mon Nov 18 2019 12:36:04.4060	1756
Mon Nov 18 2019 12:36:14.4060	1766
Mon Nov 18 2019 12:36:24.4060	1777
Mon Nov 18 2019 12:36:34.4060	1786
Mon Nov 18 2019 12:36:44.4060	1791
Mon Nov 18 2019 12:36:54.4060	1792
Mon Nov 18 2019 12:37:04.4060	1791
Mon Nov 18 2019 12:37:14.4060	1789
Mon Nov 18 2019 12:37:24.4060	1787
Mon Nov 18 2019 12:37:34.4060	1783
Mon Nov 18 2019 12:37:44.4060	1778
Mon Nov 18 2019 12:37:54.4060	1774
Mon Nov 18 2019 12:38:04.4060	1770
Mon Nov 18 2019 12:38:14.4060	1765
Mon Nov 18 2019 12:38:24.4060	1760
Mon Nov 18 2019 12:38:34.4060	1755
Mon Nov 18 2019 12:38:44.4060	1751
Mon Nov 18 2019 12:38:54.4060	1747
Mon Nov 18 2019 12:39:04.4060	1747
Mon Nov 18 2019 12:39:14.4060	1752
Mon Nov 18 2019 12:39:24.4060	1757
Mon Nov 18 2019 12:39:34.4060	1761
Mon Nov 18 2019 12:39:44.4060	1763
Mon Nov 18 2019 12:39:54.4060	1764
Mon Nov 18 2019 12:40:04.4060	1765
Mon Nov 18 2019 12:40:14.4060	1765
Mon Nov 18 2019 12:40:24.4060	1765
Mon Nov 18 2019 12:40:34.4060	1765
Mon Nov 18 2019 12:40:44.4060	1765
Mon Nov 18 2019 12:40:54.4060	1764
Mon Nov 18 2019 12:41:04.4060	1763
Mon Nov 18 2019 12:41:14.4060	1762
Mon Nov 18 2019 12:41:24.4060	1761
Mon Nov 18 2019 12:41:34.4060	1758
Mon Nov 18 2019 12:41:44.4060	1756
Mon Nov 18 2019 12:41:54.4060	1753
Mon Nov 18 2019 12:42:04.4060	1754
Mon Nov 18 2019 12:42:14.4060	1765
Mon Nov 18 2019 12:42:24.4060	1779
Mon Nov 18 2019 12:42:34.4060	1789
Mon Nov 18 2019 12:42:44.4060	1793
Mon Nov 18 2019 12:42:54.4060	1794
Mon Nov 18 2019 12:43:04.4060	1792
Mon Nov 18 2019 12:43:14.4060	1788
Mon Nov 18 2019 12:43:24.4060	1785
Mon Nov 18 2019 12:43:34.4060	1782
Mon Nov 18 2019 12:43:44.4060	1779
Mon Nov 18 2019 12:43:54.4060	1775
Mon Nov 18 2019 12:44:04.4060	1770
Mon Nov 18 2019 12:44:14.4060	1766
Mon Nov 18 2019 12:44:24.4060	1761
Mon Nov 18 2019 12:44:34.4060	1756
Mon Nov 18 2019 12:44:44.4060	1751
Mon Nov 18 2019 12:44:54.4060	1746
Mon Nov 18 2019 12:45:04.4060	1744
Mon Nov 18 2019 12:45:14.4060	1749
Mon Nov 18 2019 12:45:24.4060	1754
Mon Nov 18 2019 12:45:34.4060	1759
Mon Nov 18 2019 12:45:44.4060	1763
Mon Nov 18 2019 12:45:54.4060	1765
Mon Nov 18 2019 12:46:04.4060	1765

RTO Combustion Chamber Temperature Data - VOM Destruction Efficiency Testing
GII, LLC Chicago Ilinois

	Time	RTO Temp 0 - 2000F
11-18-19 Run 4	Mon Nov 18 2019 16:40:04.4060	1777
	Mon Nov 18 2019 16:40:14.4060	1778
	Mon Nov 18 2019 16:40:24.4060	1778
	Mon Nov 18 2019 16:40:34.4060	1777
Time: 16:40 PM - 17:56 PM	Mon Nov 18 2019 16:40:44.4060	1775
	Mon Nov 18 2019 16:40:54.4060	1774
	Mon Nov 18 2019 16:41:04.4060	1773
	Mon Nov 18 2019 16:41:14.4060	1772
	Mon Nov 18 2019 16:41:24.4060	1771
	Mon Nov 18 2019 16:41:34.4060	1770
	Mon Nov 18 2019 16:41:44.4060	1767
	Mon Nov 18 2019 16:41:54.4060	1765
	Mon Nov 18 2019 16:42:04.4060	1764
	Mon Nov 18 2019 16:42:14.4060	1772
	Mon Nov 18 2019 16:42:24.4060	1784
	Mon Nov 18 2019 16:42:34.4060	1792
	Mon Nov 18 2019 16:42:44.4060	1795
	Mon Nov 18 2019 16:42:54.4060	1794
	Mon Nov 18 2019 16:43:04.4060	1793
	Mon Nov 18 2019 16:43:14.4060	1791
	Mon Nov 18 2019 16:43:24.4060	1787
	Mon Nov 18 2019 16:43:34.4060	1784
	Mon Nov 18 2019 16:43:44.4060	1781
	Mon Nov 18 2019 16:43:54.4060	1778
	Mon Nov 18 2019 16:44:04.4060	1775
	Mon Nov 18 2019 16:44:14.4060	1771
	Mon Nov 18 2019 16:44:24.4060	1767
	Mon Nov 18 2019 16:44:34.4060	1762
	Mon Nov 18 2019 16:44:44.4060	1756
	Mon Nov 18 2019 16:44:54.4060	1749
	Mon Nov 18 2019 16:45:04.4060	1743
	Mon Nov 18 2019 16:45:14.4060	1746
	Mon Nov 18 2019 16:45:24.4060	1751
	Mon Nov 18 2019 16:45:34.4060	1756
	Mon Nov 18 2019 16:45:44.4060	1760
	Mon Nov 18 2019 16:45:54.4060	1762
	Mon Nov 18 2019 16:46:04.4060	1764
	Mon Nov 18 2019 16:46:14.4060	1765
	Mon Nov 18 2019 16:46:24.4060	1766
	Mon Nov 18 2019 16:46:34.4060	1767
	Mon Nov 18 2019 16:46:44.4060	1767
	Mon Nov 18 2019 16:46:54.4060	1768
	Mon Nov 18 2019 16:47:04.4060	1768
	Mon Nov 18 2019 16:47:14.4060	1767
	Mon Nov 18 2019 16:47:24.4060	1766
	Mon Nov 18 2019 16:47:34.4060	1765
	Mon Nov 18 2019 16:47:44.4060	1763
	Mon Nov 18 2019 16:47:54.4060	1760
	Mon Nov 18 2019 16:48:04.4060	1760
	Mon Nov 18 2019 16:48:14.4060	1767
	Mon Nov 18 2019 16:48:24.4060	1775
	Mon Nov 18 2019 16:48:34.4060	1781
	Mon Nov 18 2019 16:48:44.4060	1784
	Mon Nov 18 2019 16:48:54.4060	1784
	Mon Nov 18 2019 16:49:04.4060	1782
	Mon Nov 18 2019 16:49:14.4060	1779
	Mon Nov 18 2019 16:49:24.4060	1777
	Mon Nov 18 2019 16:49:34.4060	1776
	Mon Nov 18 2019 16:49:44.4060	1775
	Mon Nov 18 2019 16:49:54.4060	1774
	Mon Nov 18 2019 16:50:04.4060	1771
	Mon Nov 18 2019 16:50:14.4060	1767
	Mon Nov 18 2019 16:50:24.4060	1763
	Mon Nov 18 2019 16:50:34.4060	1759
	Mon Nov 18 2019 16:50:44.4060	1755
	Mon Nov 18 2019 16:50:54.4060	1750
	Mon Nov 18 2019 16:51:04.4060	1745
	Mon Nov 18 2019 16:51:14.4060	1746
	Mon Nov 18 2019 16:51:24.4060	1750
	Mon Nov 18 2019 16:51:34.4060	1754
	Mon Nov 18 2019 16:51:44.4060	1757
	Mon Nov 18 2019 16:51:54.4060	1759
	Mon Nov 18 2019 16:52:04.4060	1760
	Mon Nov 18 2019 16:52:14.4060	1761
	Mon Nov 18 2019 16:52:24.4060	1762
	Mon Nov 18 2019 16:52:34.4060	1763
	Mon Nov 18 2019 16:52:44.4060	1763
	Mon Nov 18 2019 16:52:54.4060	1763
	Mon Nov 18 2019 16:53:04.4060	1763
	Mon Nov 18 2019 16:53:14.4060	1762
	Mon Nov 18 2019 16:53:24.4060	1761
	Mon Nov 18 2019 16:53:34.4060	1760
	Mon Nov 18 2019 16:53:44.4060	1757
	Mon Nov 18 2019 16:53:54.4060	1755
	Mon Nov 18 2019 16:54:04.4060	1757
	Mon Nov 18 2019 16:54:14.4060	1765
	Mon Nov 18 2019 16:54:24.4060	1774
	Mon Nov 18 2019 16:54:34.4060	1780
	Mon Nov 18 2019 16:54:44.4060	1781
	Mon Nov 18 2019 16:54:54.4060	1780
	Mon Nov 18 2019 16:55:04.4060	1778
	Mon Nov 18 2019 16:55:14.4060	1777
	Mon Nov 18 2019 16:55:24.4060	1776
	Mon Nov 18 2019 16:55:34.4060	1775
	Mon Nov 18 2019 16:55:44.4060	1773
	Mon Nov 18 2019 16:55:54.4060	1771
	Mon Nov 18 2019 16:56:04.4060	1769
	Mon Nov 18 2019 16:56:14.4060	1766
	Mon Nov 18 2019 16:56:24.4060	1763
	Mon Nov 18 2019 16:56:34.4060	1761
	Mon Nov 18 2019 16:56:44.4060	1758
	Mon Nov 18 2019 16:56:54.4060	1754
	Mon Nov 18 2019 16:57:04.4060	1748
	Mon Nov 18 2019 16:57:14.4060	1748
	Mon Nov 18 2019 16:57:24.4060	1750
	Mon Nov 18 2019 16:57:34.4060	1754
	Mon Nov 18 2019 16:57:44.4060	1757

RTO Combustion Chamber Temperature Data - VOM Destruction Efficiency Testing
GII, LLC Chicago Ilinois

Time	RTO Temp 0 - 2000F
Mon Nov 18 2019 16:57:54.4060	1758
Mon Nov 18 2019 16:58:04.4060	1759
Mon Nov 18 2019 16:58:14.4060	1759
Mon Nov 18 2019 16:58:24.4060	1760
Mon Nov 18 2019 16:58:34.4060	1760
Mon Nov 18 2019 16:58:44.4060	1761
Mon Nov 18 2019 16:58:54.4060	1761
Mon Nov 18 2019 16:59:04.4060	1760
Mon Nov 18 2019 16:59:14.4060	1759
Mon Nov 18 2019 16:59:24.4060	1758
Mon Nov 18 2019 16:59:34.4060	1756
Mon Nov 18 2019 16:59:44.4060	1754
Mon Nov 18 2019 16:59:54.4060	1752
Mon Nov 18 2019 17:00:04.4060	1751
Mon Nov 18 2019 17:00:14.4060	1760
Mon Nov 18 2019 17:00:24.4060	1770
Mon Nov 18 2019 17:00:34.4060	1778
Mon Nov 18 2019 17:00:44.4060	1781
Mon Nov 18 2019 17:00:54.4060	1781
Mon Nov 18 2019 17:01:04.4060	1780
Mon Nov 18 2019 17:01:14.4060	1779
Mon Nov 18 2019 17:01:24.4060	1778
Mon Nov 18 2019 17:01:34.4060	1776
Mon Nov 18 2019 17:01:44.4060	1773
Mon Nov 18 2019 17:01:54.4060	1771
Mon Nov 18 2019 17:02:04.4060	1769
Mon Nov 18 2019 17:02:14.4060	1766
Mon Nov 18 2019 17:02:24.4060	1763
Mon Nov 18 2019 17:02:34.4060	1757
Mon Nov 18 2019 17:02:44.4060	1752
Mon Nov 18 2019 17:02:54.4060	1747
Mon Nov 18 2019 17:03:04.4060	1743
Mon Nov 18 2019 17:03:14.4060	1745
Mon Nov 18 2019 17:03:24.4060	1750
Mon Nov 18 2019 17:03:34.4060	1754
Mon Nov 18 2019 17:03:44.4060	1758
Mon Nov 18 2019 17:03:54.4060	1760
Mon Nov 18 2019 17:04:04.4060	1761
Mon Nov 18 2019 17:04:14.4060	1761
Mon Nov 18 2019 17:04:24.4060	1761
Mon Nov 18 2019 17:04:34.4060	1760
Mon Nov 18 2019 17:04:44.4060	1760
Mon Nov 18 2019 17:04:54.4060	1760
Mon Nov 18 2019 17:05:04.4060	1759
Mon Nov 18 2019 17:05:14.4060	1758
Mon Nov 18 2019 17:05:24.4060	1756
Mon Nov 18 2019 17:05:34.4060	1755
Mon Nov 18 2019 17:05:44.4060	1753
Mon Nov 18 2019 17:05:54.4060	1750
Mon Nov 18 2019 17:06:04.4060	1750
Mon Nov 18 2019 17:06:14.4060	1761
Mon Nov 18 2019 17:06:24.4060	1771
Mon Nov 18 2019 17:06:34.4060	1779
Mon Nov 18 2019 17:06:44.4060	1784
Mon Nov 18 2019 17:06:54.4060	1785
Mon Nov 18 2019 17:07:04.4060	1785
Mon Nov 18 2019 17:07:14.4060	1783
Mon Nov 18 2019 17:07:24.4060	1781
Mon Nov 18 2019 17:07:34.4060	1780
Mon Nov 18 2019 17:07:44.4060	1779
Mon Nov 18 2019 17:07:54.4060	1777
Mon Nov 18 2019 17:08:04.4060	1773
Mon Nov 18 2019 17:08:14.4060	1769
Mon Nov 18 2019 17:08:24.4060	1765
Mon Nov 18 2019 17:08:34.4060	1760
Mon Nov 18 2019 17:08:44.4060	1756
Mon Nov 18 2019 17:08:54.4060	1752
Mon Nov 18 2019 17:09:04.4060	1748
Mon Nov 18 2019 17:09:14.4060	1749
Mon Nov 18 2019 17:09:24.4060	1753
Mon Nov 18 2019 17:09:34.4060	1758
Mon Nov 18 2019 17:09:44.4060	1761
Mon Nov 18 2019 17:09:54.4060	1763
Mon Nov 18 2019 17:10:04.4060	1764
Mon Nov 18 2019 17:10:14.4060	1763
Mon Nov 18 2019 17:10:24.4060	1763
Mon Nov 18 2019 17:10:34.4060	1763
Mon Nov 18 2019 17:10:44.4060	1764
Mon Nov 18 2019 17:10:54.4060	1764
Mon Nov 18 2019 17:11:04.4060	1763
Mon Nov 18 2019 17:11:14.4060	1762
Mon Nov 18 2019 17:11:24.4060	1761
Mon Nov 18 2019 17:11:34.4060	1760
Mon Nov 18 2019 17:11:44.4060	1757
Mon Nov 18 2019 17:11:54.4060	1754
Mon Nov 18 2019 17:12:04.4060	1753
Mon Nov 18 2019 17:12:14.4060	1761
Mon Nov 18 2019 17:12:24.4060	1771
Mon Nov 18 2019 17:12:34.4060	1782
Mon Nov 18 2019 17:12:44.4060	1787
Mon Nov 18 2019 17:12:54.4060	1787
Mon Nov 18 2019 17:13:04.4060	1786
Mon Nov 18 2019 17:13:14.4060	1784
Mon Nov 18 2019 17:13:24.4060	1781
Mon Nov 18 2019 17:13:34.4060	1777
Mon Nov 18 2019 17:13:44.4060	1774
Mon Nov 18 2019 17:13:54.4060	1771
Mon Nov 18 2019 17:14:04.4060	1768
Mon Nov 18 2019 17:14:14.4060	1763
Mon Nov 18 2019 17:14:24.4060	1759
Mon Nov 18 2019 17:14:34.4060	1754
Mon Nov 18 2019 17:14:44.4060	1749
Mon Nov 18 2019 17:14:54.4060	1744
Mon Nov 18 2019 17:15:04.4060	1742
Mon Nov 18 2019 17:15:14.4060	1745
Mon Nov 18 2019 17:15:24.4060	1752
Mon Nov 18 2019 17:15:34.4060	1758

RTO Combustion Chamber Temperature Data - VOM Destruction Efficiency Testing
GII, LLC Chicago Ilinois

Time	RTO Temp 0 - 2000F
Mon Nov 18 2019 17:15:44.4060	1761
Mon Nov 18 2019 17:15:54.4060	1764
Mon Nov 18 2019 17:16:04.4060	1765
Mon Nov 18 2019 17:16:14.4060	1765
Mon Nov 18 2019 17:16:24.4060	1764
Mon Nov 18 2019 17:16:34.4060	1763
Mon Nov 18 2019 17:16:44.4060	1763
Mon Nov 18 2019 17:16:54.4060	1762
Mon Nov 18 2019 17:17:04.4060	1762
Mon Nov 18 2019 17:17:14.4060	1761
Mon Nov 18 2019 17:17:24.4060	1760
Mon Nov 18 2019 17:17:34.4060	1758
Mon Nov 18 2019 17:17:44.4060	1756
Mon Nov 18 2019 17:17:54.4060	1754
Mon Nov 18 2019 17:18:04.4060	1753
Mon Nov 18 2019 17:18:14.4060	1761
Mon Nov 18 2019 17:18:24.4060	1771
Mon Nov 18 2019 17:18:34.4060	1780
Mon Nov 18 2019 17:18:44.4060	1785
Mon Nov 18 2019 17:18:54.4060	1786
Mon Nov 18 2019 17:19:04.4060	1784
Mon Nov 18 2019 17:19:14.4060	1782
Mon Nov 18 2019 17:19:24.4060	1779
Mon Nov 18 2019 17:19:34.4060	1776
Mon Nov 18 2019 17:19:44.4060	1771
Mon Nov 18 2019 17:19:54.4060	1766
Mon Nov 18 2019 17:20:04.4060	1761
Mon Nov 18 2019 17:20:14.4060	1756
Mon Nov 18 2019 17:20:24.4060	1751
Mon Nov 18 2019 17:20:34.4060	1745
Mon Nov 18 2019 17:20:44.4060	1739
Mon Nov 18 2019 17:20:54.4060	1734
Mon Nov 18 2019 17:21:04.4060	1733
Mon Nov 18 2019 17:21:14.4060	1740
Mon Nov 18 2019 17:21:24.4060	1748
Mon Nov 18 2019 17:21:34.4060	1756
Mon Nov 18 2019 17:21:44.4060	1760
Mon Nov 18 2019 17:21:54.4060	1762
Mon Nov 18 2019 17:22:04.4060	1762
Mon Nov 18 2019 17:22:14.4060	1761
Mon Nov 18 2019 17:22:24.4060	1760
Mon Nov 18 2019 17:22:34.4060	1759
Mon Nov 18 2019 17:22:44.4060	1758
Mon Nov 18 2019 17:22:54.4060	1757
Mon Nov 18 2019 17:23:04.4060	1755
Mon Nov 18 2019 17:23:14.4060	1754
Mon Nov 18 2019 17:23:24.4060	1752
Mon Nov 18 2019 17:23:34.4060	1750
Mon Nov 18 2019 17:23:44.4060	1747
Mon Nov 18 2019 17:23:54.4060	1744
Mon Nov 18 2019 17:24:04.4060	1745
Mon Nov 18 2019 17:24:14.4060	1761
Mon Nov 18 2019 17:24:24.4060	1775
Mon Nov 18 2019 17:24:34.4060	1783
Mon Nov 18 2019 17:24:44.4060	1789
Mon Nov 18 2019 17:24:54.4060	1793
Mon Nov 18 2019 17:25:04.4060	1792
Mon Nov 18 2019 17:25:14.4060	1788
Mon Nov 18 2019 17:25:24.4060	1784
Mon Nov 18 2019 17:25:34.4060	1780
Mon Nov 18 2019 17:25:44.4060	1775
Mon Nov 18 2019 17:25:54.4060	1771
Mon Nov 18 2019 17:26:04.4060	1766
Mon Nov 18 2019 17:26:14.4060	1760
Mon Nov 18 2019 17:26:24.4060	1755
Mon Nov 18 2019 17:26:34.4060	1751
Mon Nov 18 2019 17:26:44.4060	1748
Mon Nov 18 2019 17:26:54.4060	1745
Mon Nov 18 2019 17:27:04.4060	1747
Mon Nov 18 2019 17:27:14.4060	1757
Mon Nov 18 2019 17:27:24.4060	1766
Mon Nov 18 2019 17:27:34.4060	1772
Mon Nov 18 2019 17:27:44.4060	1775
Mon Nov 18 2019 17:27:54.4060	1776
Mon Nov 18 2019 17:28:04.4060	1776
Mon Nov 18 2019 17:28:14.4060	1774
Mon Nov 18 2019 17:28:24.4060	1772
Mon Nov 18 2019 17:28:34.4060	1770
Mon Nov 18 2019 17:28:44.4060	1768
Mon Nov 18 2019 17:28:54.4060	1766
Mon Nov 18 2019 17:29:04.4060	1764
Mon Nov 18 2019 17:29:14.4060	1762
Mon Nov 18 2019 17:29:24.4060	1760
Mon Nov 18 2019 17:29:34.4060	1757
Mon Nov 18 2019 17:29:44.4060	1755
Mon Nov 18 2019 17:29:54.4060	1751
Mon Nov 18 2019 17:30:04.4060	1753
Mon Nov 18 2019 17:30:14.4060	1772
Mon Nov 18 2019 17:30:24.4060	1789
Mon Nov 18 2019 17:30:34.4060	1799
Mon Nov 18 2019 17:30:44.4060	1806
Mon Nov 18 2019 17:30:54.4060	1808
Mon Nov 18 2019 17:31:04.4060	1807
Mon Nov 18 2019 17:31:14.4060	1804
Mon Nov 18 2019 17:31:24.4060	1799
Mon Nov 18 2019 17:31:34.4060	1794
Mon Nov 18 2019 17:31:44.4060	1790
Mon Nov 18 2019 17:31:54.4060	1787
Mon Nov 18 2019 17:32:04.4060	1782
Mon Nov 18 2019 17:32:14.4060	1777
Mon Nov 18 2019 17:32:24.4060	1771
Mon Nov 18 2019 17:32:34.4060	1764
Mon Nov 18 2019 17:32:44.4060	1757
Mon Nov 18 2019 17:32:54.4060	1753
Mon Nov 18 2019 17:33:04.4060	1752
Mon Nov 18 2019 17:33:14.4060	1759
Mon Nov 18 2019 17:33:24.4060	1766

RTO Combustion Chamber Temperature Data - VOM Destruction Efficiency Testing
GII, LLC Chicago Ilinois

Time	RTO Temp 0 - 2000F
Mon Nov 18 2019 17:33:34.4060	1772
Mon Nov 18 2019 17:33:44.4060	1775
Mon Nov 18 2019 17:33:54.4060	1777
Mon Nov 18 2019 17:34:04.4060	1778
Mon Nov 18 2019 17:34:14.4060	1778
Mon Nov 18 2019 17:34:24.4060	1777
Mon Nov 18 2019 17:34:34.4060	1777
Mon Nov 18 2019 17:34:44.4060	1775
Mon Nov 18 2019 17:34:54.4060	1774
Mon Nov 18 2019 17:35:04.4060	1771
Mon Nov 18 2019 17:35:14.4060	1769
Mon Nov 18 2019 17:35:24.4060	1766
Mon Nov 18 2019 17:35:34.4060	1762
Mon Nov 18 2019 17:35:44.4060	1759
Mon Nov 18 2019 17:35:54.4060	1756
Mon Nov 18 2019 17:36:04.4060	1756
Mon Nov 18 2019 17:36:14.4060	1772
Mon Nov 18 2019 17:36:24.4060	1785
Mon Nov 18 2019 17:36:34.4060	1791
Mon Nov 18 2019 17:36:44.4060	1793
Mon Nov 18 2019 17:36:54.4060	1794
Mon Nov 18 2019 17:37:04.4060	1794
Mon Nov 18 2019 17:37:14.4060	1792
Mon Nov 18 2019 17:37:24.4060	1790
Mon Nov 18 2019 17:37:34.4060	1788
Mon Nov 18 2019 17:37:44.4060	1784
Mon Nov 18 2019 17:37:54.4060	1780
Mon Nov 18 2019 17:38:04.4060	1775
Mon Nov 18 2019 17:38:14.4060	1769
Mon Nov 18 2019 17:38:24.4060	1763
Mon Nov 18 2019 17:38:34.4060	1758
Mon Nov 18 2019 17:38:44.4060	1754
Mon Nov 18 2019 17:38:54.4060	1749
Mon Nov 18 2019 17:39:04.4060	1746
Mon Nov 18 2019 17:39:14.4060	1751
Mon Nov 18 2019 17:39:24.4060	1758
Mon Nov 18 2019 17:39:34.4060	1763
Mon Nov 18 2019 17:39:44.4060	1767
Mon Nov 18 2019 17:39:54.4060	1769
Mon Nov 18 2019 17:40:04.4060	1770
Mon Nov 18 2019 17:40:14.4060	1771
Mon Nov 18 2019 17:40:24.4060	1771
Mon Nov 18 2019 17:40:34.4060	1771
Mon Nov 18 2019 17:40:44.4060	1770
Mon Nov 18 2019 17:40:54.4060	1770
Mon Nov 18 2019 17:41:04.4060	1769
Mon Nov 18 2019 17:41:14.4060	1767
Mon Nov 18 2019 17:41:24.4060	1765
Mon Nov 18 2019 17:41:34.4060	1762
Mon Nov 18 2019 17:41:44.4060	1759
Mon Nov 18 2019 17:41:54.4060	1756
Mon Nov 18 2019 17:42:04.4060	1756
Mon Nov 18 2019 17:42:14.4060	1769
Mon Nov 18 2019 17:42:24.4060	1781
Mon Nov 18 2019 17:42:34.4060	1788
Mon Nov 18 2019 17:42:44.4060	1792
Mon Nov 18 2019 17:42:54.4060	1793
Mon Nov 18 2019 17:43:04.4060	1791
Mon Nov 18 2019 17:43:14.4060	1790
Mon Nov 18 2019 17:43:24.4060	1787
Mon Nov 18 2019 17:43:34.4060	1784
Mon Nov 18 2019 17:43:44.4060	1781
Mon Nov 18 2019 17:43:54.4060	1778
Mon Nov 18 2019 17:44:04.4060	1773
Mon Nov 18 2019 17:44:14.4060	1766
Mon Nov 18 2019 17:44:24.4060	1760
Mon Nov 18 2019 17:44:34.4060	1755
Mon Nov 18 2019 17:44:44.4060	1750
Mon Nov 18 2019 17:44:54.4060	1745
Mon Nov 18 2019 17:45:04.4060	1742
Mon Nov 18 2019 17:45:14.4060	1747
Mon Nov 18 2019 17:45:24.4060	1753
Mon Nov 18 2019 17:45:34.4060	1760
Mon Nov 18 2019 17:45:44.4060	1764
Mon Nov 18 2019 17:45:54.4060	1766
Mon Nov 18 2019 17:46:04.4060	1767
Mon Nov 18 2019 17:46:14.4060	1767
Mon Nov 18 2019 17:46:24.4060	1767
Mon Nov 18 2019 17:46:34.4060	1767
Mon Nov 18 2019 17:46:44.4060	1767
Mon Nov 18 2019 17:46:54.4060	1766
Mon Nov 18 2019 17:47:04.4060	1766
Mon Nov 18 2019 17:47:14.4060	1765
Mon Nov 18 2019 17:47:24.4060	1763
Mon Nov 18 2019 17:47:34.4060	1760
Mon Nov 18 2019 17:47:44.4060	1757
Mon Nov 18 2019 17:47:54.4060	1754
Mon Nov 18 2019 17:48:04.4060	1753
Mon Nov 18 2019 17:48:14.4060	1766
Mon Nov 18 2019 17:48:24.4060	1778
Mon Nov 18 2019 17:48:34.4060	1785
Mon Nov 18 2019 17:48:44.4060	1789
Mon Nov 18 2019 17:48:54.4060	1791
Mon Nov 18 2019 17:49:04.4060	1790
Mon Nov 18 2019 17:49:14.4060	1789
Mon Nov 18 2019 17:49:24.4060	1787
Mon Nov 18 2019 17:49:34.4060	1784
Mon Nov 18 2019 17:49:44.4060	1780
Mon Nov 18 2019 17:49:54.4060	1775
Mon Nov 18 2019 17:50:04.4060	1771
Mon Nov 18 2019 17:50:14.4060	1766
Mon Nov 18 2019 17:50:24.4060	1763
Mon Nov 18 2019 17:50:34.4060	1759
Mon Nov 18 2019 17:50:44.4060	1755
Mon Nov 18 2019 17:50:54.4060	1750
Mon Nov 18 2019 17:51:04.4060	1745
Mon Nov 18 2019 17:51:14.4060	1749

RTO Combustion Chamber Temperature Data - VOM Destruction Efficiency Testing
GII, LLC Chicago Ilinois

Time	RTO Temp 0 - 2000F
Mon Nov 18 2019 17:51:24.4060	1754
Mon Nov 18 2019 17:51:34.4060	1760
Mon Nov 18 2019 17:51:44.4060	1763
Mon Nov 18 2019 17:51:54.4060	1766
Mon Nov 18 2019 17:52:04.4060	1766
Mon Nov 18 2019 17:52:14.4060	1766
Mon Nov 18 2019 17:52:24.4060	1767
Mon Nov 18 2019 17:52:34.4060	1768
Mon Nov 18 2019 17:52:44.4060	1768
Mon Nov 18 2019 17:52:54.4060	1767
Mon Nov 18 2019 17:53:04.4060	1767
Mon Nov 18 2019 17:53:14.4060	1766
Mon Nov 18 2019 17:53:24.4060	1764
Mon Nov 18 2019 17:53:34.4060	1761
Mon Nov 18 2019 17:53:44.4060	1759
Mon Nov 18 2019 17:53:54.4060	1755
Mon Nov 18 2019 17:54:04.4060	1754
Mon Nov 18 2019 17:54:14.4060	1763
Mon Nov 18 2019 17:54:24.4060	1774
Mon Nov 18 2019 17:54:34.4060	1781
Mon Nov 18 2019 17:54:44.4060	1786
Mon Nov 18 2019 17:54:54.4060	1788
Mon Nov 18 2019 17:55:04.4060	1788
Mon Nov 18 2019 17:55:14.4060	1785
Mon Nov 18 2019 17:55:24.4060	1781
Mon Nov 18 2019 17:55:34.4060	1779
Mon Nov 18 2019 17:55:44.4060	1776
Mon Nov 18 2019 17:55:54.4060	1773

RK & Associates, Inc.

Emissions Test Report
RTO VOM Destruction Efficiency
GII, LLC
IEPA Site ID.: 031600BTB

GII, LLC
1909 NORTH CLIFTON AVENUE
CHICAGO, ILLINOIS 60614

JANUARY 2020

APPENDIX C

EMISSIONS TEST PLAN

RK
& Associates, Inc.

October 10, 2019

R17421-6

Illinois Environmental Protection Agency
Bureau of Air – Compliance Section (#40)
1021 N. Grand Avenue East
Springfield, Illinois 62794

Hard Copy via UPS Overnight

Revision to Emission Test Plan for a Metal Shredder Controlled by an RTO/Scrubber
GII, LLC – 1909 N. Clifton Avenue – Chicago, Illinois 60614
Site ID: 031600BTB; Construction Permit 18110021 issued February 11, 2019

To Whom This May Concern:

On behalf of GII, LLC (GII), this correspondence describes a revision to the initial test plan dated May 24, 2019. Revisions are limited to an updated copy of Figure 3 (see attached) showing the as-built equipment configuration identifying the location of available test ports. As installed, the duct work between the RTO outlet and scrubber inlet does not provide a suitable location for test ports to measure gas flow rate and moisture content; therefore, the VOM testing previously identified as being performed at the outlet of the RTO will now be performed at the outlet of the scrubber. The location of performance testing for all other pollutants is not affected by this change.

The following table, included on Page 2 of the initial test plan, has been modified to reflect the revision described above.

Summary of Test Methods to be Performed –
Existing Metal Shredder Controlled by RTO, Quench, and Packed Tower Scrubber
GII, LLC – Chicago, Illinois

Parameter/Pollutant	USEPA Method	Sample Location		
		RTO Inlet	~~RTO Outlet~~	Scrubber Outlet
Sample and Velocity Traverses for Stationary Sources	1	X	~~X~~	X
Determination of Stack Gas Velocity and Volumetric Flow Rate (Type S Pitot Tube)	2	X	~~X~~	X
Gas Analysis for the Determination of Dry Molecular Weight (Oxygen and Carbon Dioxide)	3A	X	~~X~~	X
Determination of Moisture Content in Stack Gases	4	X	~~X~~	X
Determination of Particulate Matter from Stationary Sources	5			X
Determination of Sulfur Dioxide from Stationary Sources	6C			X
Visual Determination of the Opacity of Emissions from Stationary Sources	9			

2 South 631 Route 59; Suite B
Warrenville, IL 60555
(630) 393-9000
Fax (630) 393-9111

RK & Associates, Inc.

Parameter/Pollutant	USEPA Method	Sample Location		
		RTO Inlet	~~RTO Outlet~~	Scrubber Outlet
Determination of Carbon Monoxide from Stationary Sources	10			X
Determination of Total Gaseous Nonmethane Organic Emissions as Carbon	25	X	~~X~~	X
Determination of Total Gaseous Organic Concentration Using a Flame Ionization Analyzer	25A*	X	~~X~~	X
Determination of Hydrogen Chloride Emissions From Stationary Sources (including audit samples)	26			X
Determination of Metals Emissions from Stationary Sources (including audit samples)	29 (including Hg)			X
Determination of Condensable Particulate from Stationary Sources	202			X

* USEPA Method 25A may only be used if outlet VOM concentration is less than 50 ppm as carbon (non-methane).

Please note that in the Mostardi Platt test protocol (in Appendix A of the initial test plan), any reference to test ports located at the RTO outlet now refer to test ports located at the scrubber outlet.

If you have any questions, or require any additional information please do not hesitate to contact Mr. Jim Kallas, Environmental Manager for GII at 847-508-9170 (jimkallas@general-iron.com) or me at 630-393-9000 (jpinion@rka-inc.com).

Yours very truly,
RK & Associates, Inc.

John G. Pinion
Principal Engineer

cc: Mr. Jim Kallas – Environmental Manager – GII, LLC. – Chicago, Illinois – via e-mail
Mr. Kevin Mattison – IEPA – via e-mail at kevin.mattison@illinois.gov – via e-mail

Figure Revised October 10, 2019 to show as-built equipment configuration and test port locations

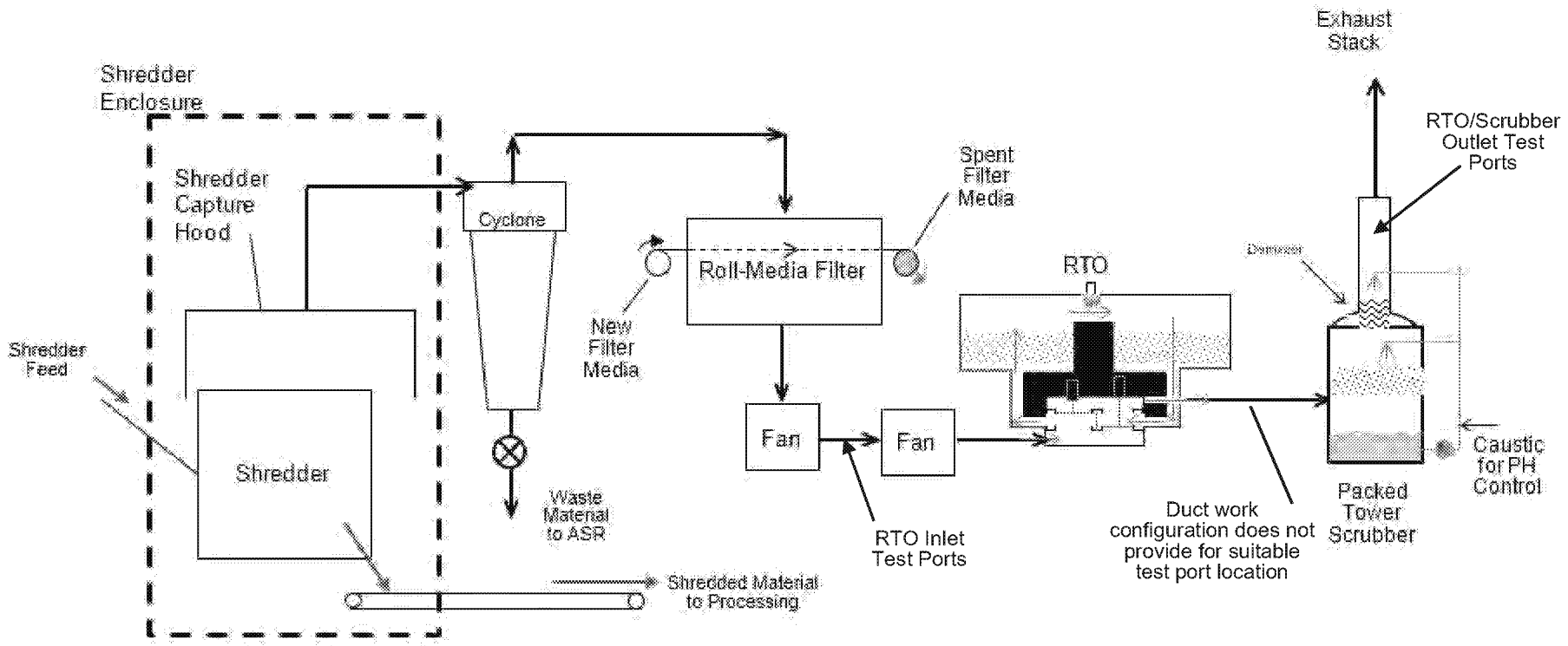

RK & Associates, Inc. 2S631 ROUTE 59, SUITE B WARRENVILLE, IL 60555 630-393-9000	COMMENTS: Emission Test Plan for a Metal Shredder Controlled by an RTO/Scrubber		Metal Shredder Flow Diagram GII, LLC – Chicago, Illinois		FIGURE 3
	DRAWN BY:	APPROVED BY: JGP	PROJECT NUMBER R17421-6	DATE DRAWN: 10-2019	REVISED DATE 10-10-2019

This Page Left Blank

RK
& Associates, Inc.

May 24, 2019

R17421-6

Illinois Environmental Protection Agency
Bureau of Air – Compliance Section (#40)
1021 N. Grand Avenue East
Springfield, Illinois 62794

Hard Copy via UPS Overnight

Emission Test Plan for a Metal Shredder Controlled by an RTO/Scrubber
General Iron Industries, Inc. – 1909 N. Clifton Avenue – Chicago, Illinois 60614
Site ID: 031600BTB; Construction Permit 18110021 issued February 11, 2019

To Whom This May Concern:

On behalf of General Iron Industries, Inc. (General Iron), please find attached the Emission Test Plan for measuring emissions from an existing Metal Shredder controlled by a Regenerative Thermal Oxidizer (RTO), Quench and Packed Tower Scrubber at the above referenced location. This testing is being performed in accordance with the requirements specified in Condition 8 of the above referenced construction permit.

If you have any questions, or require any additional information please do not hesitate to contact Mr. Jim Kallas, Environmental Manager for General Iron 847-508-9170 (jim@general-iron.com) or me at 630-393-9000 (jpinion@rka-inc.com).

Yours very truly,
RK & Associates, Inc.

John G. Pinion
Principal Engineer

cc: Mr. Jim Kallas – Environmental Manager – General Iron Industries, Inc. – Chicago, Illinois
Mr. Kevin Mattison – IEPA – via e-mail at kevin.mattison@illinois.gov

2 South 631 Route 59; Suite B
Warrenville, IL 60555
(630) 393-9000
Fax (630) 393-9111

Emission Test Plan for an Existing Metal Shredder Controlled by an RTO, Quench and Packed Tower Scrubber

General Iron Industries, Inc. – Chicago, Illinois
IEPA Bureau of Air Site ID: 031600BTB; Const. Pmt. No: 18110021

May 24, 2019

R17421-6

Prepared for:
General Iron Industries, Inc.
1909 N. Clifton, Avenue
Chicago, Illinois 60614

Submitted to:
Illinois Environmental Protection Agency
Bureau of Air – Compliance Section (#40)
1021 N. Grand Avenue East
Springfield, Illinois 62794

RK & Associates, Inc.
2 South 631 Route 59
Suite B
Warrenville, Illinois 60555
Phone: 630-393-9000
Fax: 630-393-9111

RK & Associates, Inc.

TABLE OF CONTENTS

1.0 INTRODUCTION 1
- 1.1 Facility Location 1
- 1.2 Project Contact Information 3
- 1.3 Applicable Emission Limits 3

2.0 PROCESS DESCRIPTION AND PROPOSED OPERATING PARAMETERS 7
- 2.1 Existing Metal Shredder 7
- 2.2 Shredder Emissions Control System 8
  - 2.2.1 Cyclone/Roll Media Filter for Control of Particulate 8
  - 2.2.2 Regenerative Thermal Oxidizer 8
  - 2.2.3 Quench/Packed Tower Scrubber 9
- 2.3 System Operating Parameters 10
  - 2.3.1 Shredder Operating Parameters 10
  - 2.3.2 Shredder Emissions Control System Operating Parameters 11

3.0 TEST METHODS AND PROCEDURES 13

4.0 PROJECT PERSONNEL 14

5.0 TEST SCHEDULE 15

6.0 QUALITY ASSURANCE PROCEDURES 16

7.0 TEST REPORT 17

FIGURES

Figure 1 Site Location Map 5
Figure 2 Site Layout Diagram 6
Figure 3 Metal Shredder Flow Diagram 12

TABLES

Figure 2-1 Shredder Exhaust Parameters 8
Figure 2-2 RTO Design Parameters 9
Figure 2-3 Quench/Packed Tower Scrubber Design Parameters 10

ATTACHMENTS

Attachment A Shredder Emissions Testing Methods and Procedures (Mostardi Platt)

This Page Left Blank

1.0 INTRODUCTION

General Iron Industries, Inc. (General Iron) is an existing scrap metal recycling facility located at 1909 N. Clifton Avenue, Chicago, Illinois (see Figure 1). General Iron receives and shreds mixed scrap metal in various forms to produce uniform grades of ferrous and non-ferrous metals. Existing scrap handling and processing activities include receiving, sorting, shredding, metal separation and recovery of nonferrous metals, and shipping.

General Iron currently operates under an Illinois Environmental Protection Agency (IEPA) Lifetime Operating Permit (Application No. 81050001; Site ID No. 031600BTB) most recently revised and reissued on September 1, 2004.

On February 11, 2019, General Iron received Construction Permit No. 18110021 (RTO Construction Permit) authorizing the construction of a Regenerative Thermal Oxidizer (RTO) and Packed Tower Scrubber for control of emissions from an existing metal shredder.

Condition 8.a. of the RTO construction permit requires that emission testing of the RTO/Scrubber be performed within 60 days of initial startup of the RTO/Scrubber. As of the date of this Test Plan, initial startup is anticipated in July 2019 with testing to follow upon completion of startup activities.

Condition 8.e. of the RTO construction permit requires the submission of a written test plan to the Illinois Environmental Protection Agency (IEPA) at least 60 days prior to the actual testing date. This Test Plan is being submitted pursuant to this requirement.

A written notification of testing will be submitted to IEPA at least 30 days prior to the testing, pursuant to Condition 8.f. of the RTO construction permit.

This Test Plan addresses the required minimum elements for a test plan identified in Condition 8.e.i. through 8.e.vii or the RTO construction permit.

Table 1 presents a summary of the proposed sampling parameters, test methods and sampling locations identified for this testing event.

1.1 Facility Location

General Iron is located at 1909 N. Clifton Avenue in Chicago (Cook County) Illinois as shown in Figure 1. A Facility Layout map is presented in Figure 2. Facility contact information is provided in Section 1.2 below.

Summary of Test Methods to be Performed – Existing Metal Shredder Controlled by RTO, Quench, and Packed Tower Scrubber General Iron Industries, Inc. – Chicago, Illinois

Parameter/Pollutant	USEPA Method	Sample Location		
		RTO Inlet	RTO Outlet	Scrubber Outlet
Sample and Velocity Traverses for Stationary Sources	1	X	X	X
Determination of Stack Gas Velocity and Volumetric Flow Rate (Type S Pitot Tube)	2	X	X	X
Gas Analysis for the Determination of Dry Molecular Weight (Oxygen and Carbon Dioxide)	3A	X	X	X
Determination of Moisture Content in Stack Gases	4	X	X	X
Determination of Particulate Matter from Stationary Sources	5			X
Determination of Sulfur Dioxide from Stationary Sources	6C			X
Visual Determination of the Opacity of Emissions from Stationary Sources	9			
Determination of Carbon Monoxide from Stationary Sources	10			X
Determination of Total Gaseous Nonmethane Organic Emissions as Carbon	25	X	X	
Determination of Total Gaseous Organic Concentration Using a Flame Ionization Analyzer	25A*	X	X	
Determination of Hydrogen Chloride Emissions From Stationary Sources (including audit samples)	26			X
Determination of Metals Emissions from Stationary Sources (including audit samples)	29 (including Hg)			X
Determination of Condensable Particulate from Stationary Sources	202			X

* USEPA Method 25A may only be used if outlet VOM concentration is less than 50 ppm as carbon (non-methane).

Day 1 Day 2

1.2 Project Contact Information

Business Name:	General Iron Industries, Inc.
Source Location:	1909 N. Clifton Avenue – Chicago, Illinois 60614 Cook County Illinois
Latitude/Longitude	41.915823° N / -87.658231" W – Intersection of N Clifton Ave. and N Kingsbury Street - Front Gate
Office/Mailing Address:	1909 N. Clifton Avenue – Chicago, Illinois 60614
General Iron Contact:	Mr. Jim Kallas - Environmental Manager 847-508-9170 – jim@general-iron.com
IEPA Site ID No.:	031600BTB
SIC Code:	5093 – Scrap and Waste Materials
NAICS Code:	423930 – Recyclable Material Merchant Wholesalers
Emissions Testing Contractor	David Ozawa Mostardi Platt 888 Industrial Drive – Elmhurst, Illinois 60126 630-993-2671
RKA Contact for Emissions Testing	John Pinion - Principal Engineer 2S631 Route 59, Suite B - Warrenville, Illinois 60555 630-393-9000 jpinion@rka-inc.com

1.3 Applicable Emission Limits

Condition 2.a. of the RTO construction permit prohibits emissions of smoke or particulate matter with an opacity greater than 30%, pursuant to 35 IAC 212.123.

Condition 2.c. of the RTO construction permit limits the allowable Particulate Matter (PM) emissions to a level defined by application of the Process Weight Rate equation, pursuant to 35 IAC 212.312(c).

Condition 3 of the RTO construction permit limits emissions of sulfur dioxide to 2,000 ppm or less, pursuant to 35 IAC 214.301.

Condition 6.a. of the RTO construction permit requires the RTO/Scrubber to be designed, operated, and maintained in a manner that ensures the minimum destruction efficiency for Volatile Organic Matter (VOM) emissions from the existing metal shredder is 98%.

Condition 4a of the RTO construction permit states that the Metal Shredder controlled by an RTO/Scrubber is subject to 35 IAC 218.301, which limits VOM emissions of more than 8 lb/hr of organic material into the atmosphere from any emission unit, except as provided in 35 IAC 218.302, 303, or 304. If no odor nuisance exists, the limitation of 35 IAC 218.301 only applies to photochemically reactive material. Pursuant to 35 IAC 218.302(a), emissions of organic material in excess of those allowed by 35 IAC 218.301 are allowed if such emissions are controlled by a thermal treatment device (in this case an RTO), such that emissions do not exceed 10 ppm equivalent methane or to convert 85% of hydrocarbons to carbon dioxide and water vapor.

Condition 4.c. of the RTO construction permit identifies that the Metal Shredder controlled by an RTO/Scrubber is subject to 35 IAC 218 Subpart TT (Other Emission Units) which pursuant to 35 IAC 219.986(a), requires emission capture and control equipment that achieves an overall reduction in uncontrolled VOM emissions of at least 81%.

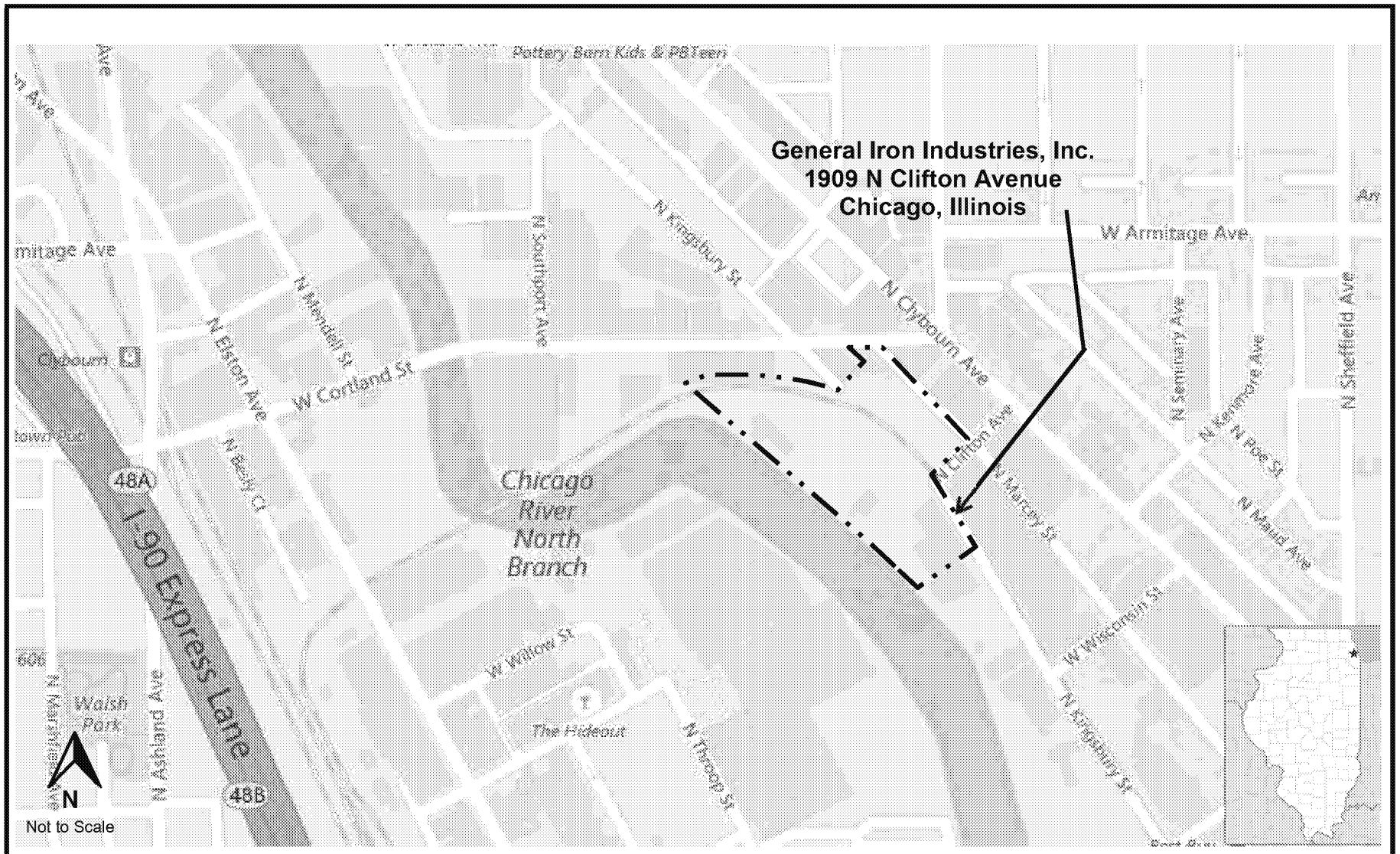

RK & Associates, Inc. 2S631 ROUTE 59, SUITE B WARRENVILLE, IL 60555 630-393-9000/630-393-9111	COMMENTS: Emission Test Plan for a Metal Shredder Controlled by an RTO/Scrubber	Site Location Map General Iron – Chicago, Illinois		FIGURE 1
	DRAWN BY:	APPROVED BY: JGP	PROJECT NUMBER R17421-6	DATE DRAWN: 05-2019	REVISED DATE

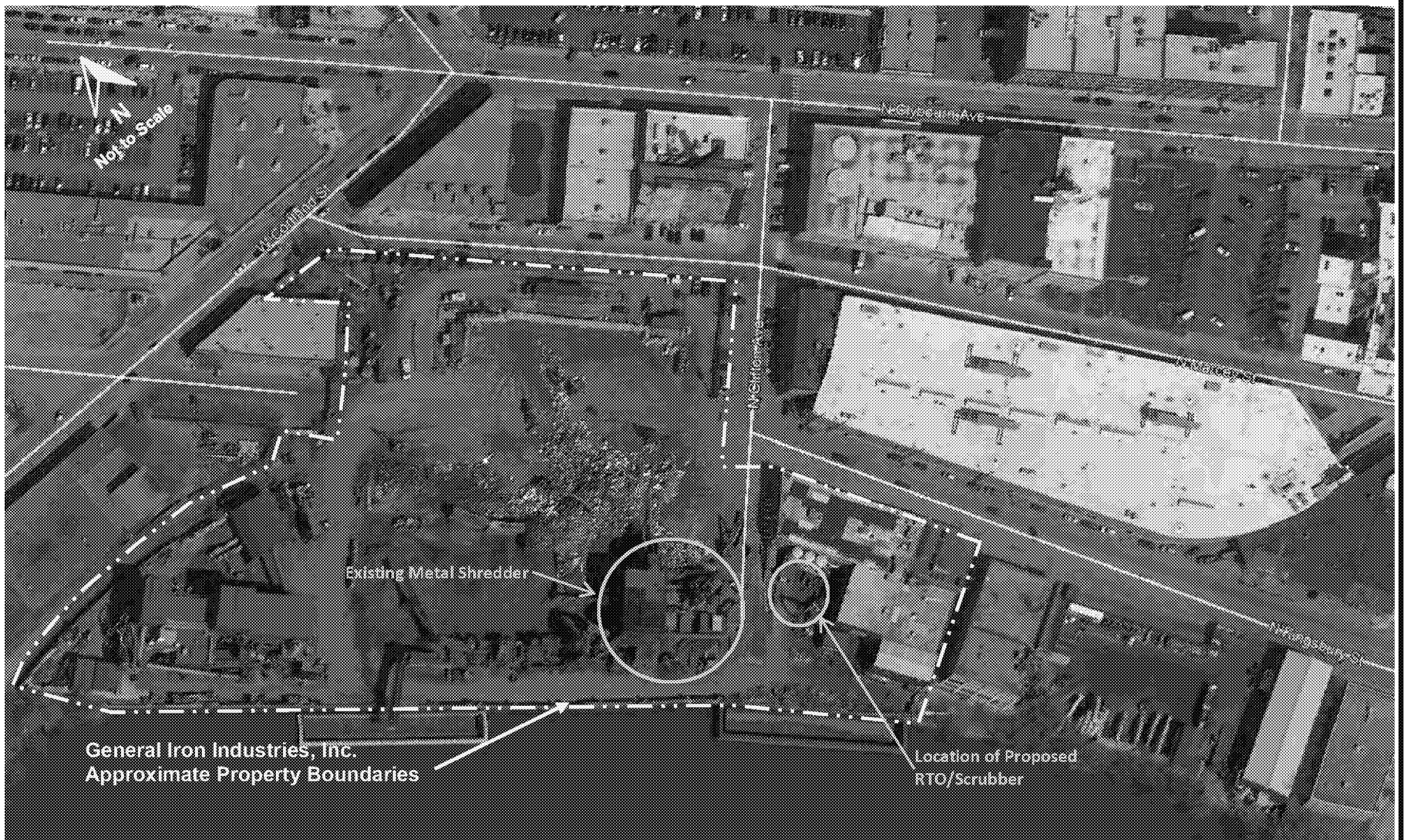

RK & Associates, Inc.
2S631 ROUTE 59, SUITE B
WARRENVILLE, IL 60555
630-393-9000/630-393-9111

COMMENTS:

Emission Test Plan for a Metal Shredder Controlled by an RTO/Scrubber

Facility Map
General Iron Industries, Inc.
1909 N Clifton Avenue - Chicago, Illinois

FIGURE: 2

DRAWN BY:	APPROVED BY:	PROJECT NUMBER:	DATE:	REVISED DATE:
	JGP	R17421-6	05-2019	

2.0 PROCESS DESCRIPTION AND PROPOSED OPERATING PARAMETERS

The following information provides a brief process description of the existing metal shredder and emissions control system. A simplified process flow diagram of the RTO/Scrubber is presented in Figure 3.

2.1 Existing Metal Shredder

General Iron operates a large hammermill to shred mixed recyclable metal in various forms to produce uniform grades of ferrous and non-ferrous metals. The shredder is located within an enclosure consisting of curtain walls on four sides, and solid plate and metal grating on the roof. The shredder is equipped with an integral water injection system to minimize the potential for fires and deflagrations within the shredder. The water injection rate is monitored by a flow meter and the flow rate is electronically recorded.

Shredded metal is discharged by conveyor and travels over two drum magnets to separate ferrous from non-ferrous material. The ferrous material then passes through a Z-Box air curtain separator to remove non-metallic material from the ferrous metal. Clean ferrous metal is discharged over a belt scale that measures the net mass of shredded ferrous materials produced (tph). This value is then multiplied by a site-specific factor of 1.33 to determine the gross shredder feed rate (tph). This factor represents the ratio of total material processed to the mass of ferrous metal produced.

The shredder is rated for a maximum throughput rate of 500 tph. The actual shredder feed rate is dependent on the type and consistency of the feed material and the ability to consistently feed the scrap to the shredder.

Review of shredder feed rate data from 2012 through 2017 shows that the average gross shredder feed rate is 313-tph. For the purposes of this emissions test, the shredder will be operated at a gross shredder feed rate of 400 tph, plus or minus 10%, which represents the maximum achievable shredder feed rate based on the types of materials processed.

For the purposes of this test, the feed to the shredder will consist 20% by weight or more of end of life vehicle (ELVs) with the remainder being general scrap metal.

A summary of the shredder exhaust gas parameters is presented in Table 2-1 below.

Table 2-1 – Shredder Exhaust Parameters

Parameter	Value
Exhaust Gas Temperature (°F)	115
Exhaust Gas Moisture (%)	4%
Exhaust Gas Flow (ACFM)	70,000
Exhaust Gas Flow (DSCFM)	60,000

2.2 Shredder Emissions Control System

The shredder emissions control system consists of an emissions capture hood, a cyclone for removal of large solids entrained in the shredder exhaust gas stream, a roll media filter for control of particulate matter, an RTO for control of VOM and a Packed Tower Scrubber for control of acid gases that may be generated in the RTO. A large induced draft fan located downstream of the scrubber draws shredder exhaust gases through the control system and discharges treated exhaust gas to the atmosphere through a dedicated vertical exhaust stack.

The shredder emissions control system is described in more detail in the following sections.

2.2.1 Cyclone/Roll Media Filter for Control of Particulate

The induced draft fan draws steam generated in the shredder and ambient air from the top of the shredder into the exhaust hood and through the cyclone and roll media filter.

The cyclone removes large pieces of non-metallic debris from the air stream.

The roll media filter is essentially a rectangular section of duct measuring approximately 18 ft by 6 ft. A 6 ft wide roll of unused filter material is placed on one side of the duct and is fed through the duct to a take-up role on the opposite side. Air flow passes downward through the filter media. The take-up roll pulls the filter material through the duct removing particulate matter collected on the filter media.

2.2.2 Regenerative Thermal Oxidizer

Air discharged from the roll media filter is ducted to the inlet of the RTO. The RTO uses two beds of high-heat capacity ceramic media to store the heat released through combustion of VOM and auxiliary fuel. At the beginning of an oxidization cycle, cool process exhaust gas is preheated as it enters the RTO passing through a hot ceramic bed (heated by the combustion chamber exhaust gases from the previous cycle). The preheated inlet gases then pass through the combustion chamber, located in a crossover duct

between the two ceramic beds, where a natural gas fired burner operates to maintain the desired operating temperature. VOM is oxidized to carbon dioxide and water vapor as it passes through the combustion chamber. Hot gases from the combustion chamber are directed downward through the second bed of ceramic media, preheating the ceramic media for the next cycle. This heat is recovered when a series of valves reverses the gas flow through the unit, allowing the cool process exhaust gas to enter the bed with the hot media, before passing through the combustion chamber.

A set of test ports, meeting the locational requirements of Method 2, will be installed at the inlet and outlet of the RTO.

A summary of the RTO design parameters is presented in Table 2-2 below.

Table 2-2 – RTO Design Parameters

RTO Design Parameter	Value
Maximum Air Flow (scfm)	70,000
VOM Destruction Efficiency	98% or greater
Combustion Chamber Operating Temperature	Approx. 1,500 °F

2.2.3 Quench/Packed Tower Scrubber

Exhaust gases from the RTO then enter a packed tower scrubber. A water spray located on the inlet side of the scrubber quenches the hot gases to the desired scrubber inlet temperature. The quenched gases enter the bottom of the scrubber vessel and pass upward through a bed of random packing material. A spray nozzle, located above the top of the packing, sprays a caustic solution over the packing. The caustic solution flows downward through the packing contacting the upward flowing exhaust gases and neutralizing any acid gases that may be generated in the RTO from combustion of chlorinated or fluorinated compounds.

Water collects in a sump at the bottom of the scrubber and is pumped back to the top of the packing through the spray nozzle. A pH monitoring system continuously measures the pH of the scrubber water and drives a chemical addition system to add caustic to the water to maintain the desired pH setpoint. A blowdown valve removes spent scrubber water from the sump at a predetermined rate to control the solids content of the scrubber water. Fresh water is added to the sump as required to maintain operating levels.

Exhaust gases exiting the packing at the top of the scrubber vessel pass through a demister pad that aggregates fine mist into water droplets that are heavy enough to drain, via gravity, back to the scrubber.

Treated gases then pass through the induced draft fan and are discharged to the atmosphere through a dedicated vertical exhaust stack. A set of test ports, meeting the locational requirements of Method 2, will be installed in the scrubber exhaust stack.

A summary of the Quench/Packed Tower Scrubber design parameters is presented in Table 2-3 below.

Table 2-3 – Quench/Packed Tower Scrubber Design Parameters

RTO Design Parameter	Value
Inlet Air Flow (scfm)	70,000
Maximum Inlet Air Temperature (°F)	300
Acid Gas Removal Efficiency	99%
Scrubber Water Recirculation Rate	700 to 1,000 gpm
Scrubber Water pH	5 to 10
Scrubber Water Blowdown Rate	Varies

2.3 System Operating Parameters

2.3.1 Shredder Operating Parameters

The following describes the operating parameters that will be monitored and recorded during emissions testing.

- Shredder Throughput

  The shredder throughput will be measured by a calibrated belt scale after the Z-Box separator. Calibration of the belt scale will be performed prior to the proposed testing described in this document.

  The number of vehicles shredded during each test will be manually counted and recorded. Each End of Life Vehicle (ELV) will be assigned an average weight, as follows: General Iron will stockpile ELVs prior to testing. There is a limited area available for stockpiling ELVs. GI will place ELVs from a number of trailer loads in the stockpile. The weight of the ELVs in the stockpile will be calculated as the sum of the net weight of each load (gross weight minus tare weight of the trucks that deliver the ELVs) placed in the stockpile. An average ELV weight will be calculated by dividing the total weight of stockpiled ELVs by the number of ELV's in the stockpile. This average ELV weight will be used for all ELVs processed during testing, even if additional vehicles that are not part of the initial stockpile are processed during testing. The mass of mixed scrap metal shredded will be determined by subtracting the total mass of vehicles shredded from the total mass of metal measured by the belt scale, adjusted by the 1.33 factor, during each test run. The gross and tare weights of trucks delivering ELVs to the facility will be measured on a calibrated truck scale. The truck scale is calibrated periodically by a qualified subcontractor in accordance with the manufacturer's recommendations.

- Shredder Water Injection Rate

  The water injection rate will be monitored by a flow meter.

  The shredder motor amperage is monitored by an amp meter located in the motor control system.

2.3.2 Shredder Emissions Control System Operating Parameters

The following describes the shredder emissions control system operating parameters that will be monitored and recorded during emissions testing.

- RTO Combustion Chamber Temperature

  The manufacturer recommended combustion chamber operating temperature is 1,500°F. The combustion chamber temperature will be continuously monitored by a temperature probe located in the combustion chamber. Operating temperatures will be electronically recorded.

  A natural gas fired burner, controlled by the combustion chamber temperature, will operate as required to maintain the desired setpoint temperature.

- Scrubber Water Flow Rate

  The scrubber water recirculation flow rate will be continuously monitored by a calibrated water meter located downstream of the pump. Water flow rates will be maintained at the scrubber manufacturers recommended rate. Water flow rates will be electronically recorded.

- Scrubber Water pH

  The pH of the scrubber water will be continuously monitored by a pH probe located in the scrubber sump. Scrubber water pH will be maintained at a level of 5 to 10. Scrubber water pH will be electronically recorded.

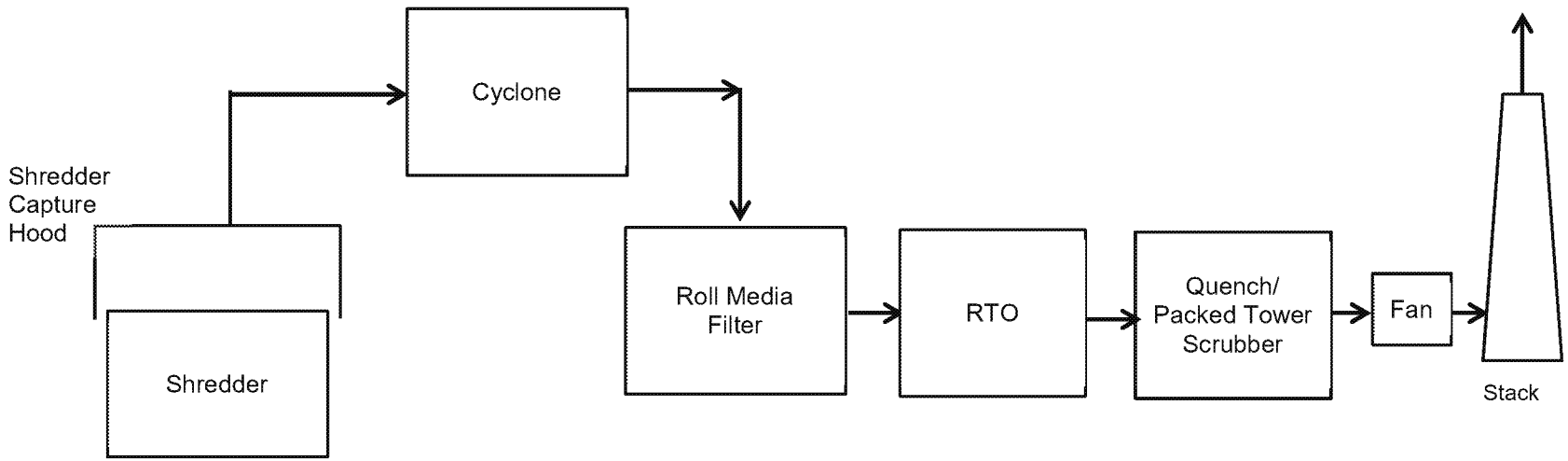

RK & Associates, Inc. 2S631 ROUTE 59, SUITE B WARRENVILLE, IL 60555 630-393-9000	COMMENTS: Emission Test Plan for a Metal Shredder Controlled by an RTO/Scrubber		Metal Shredder Flow Diagram General Iron Industries, Inc. – Chicago, Illinois		FIGURE 3
	DRAWN BY:	APPROVED BY: JGP	PROJECT NUMBER R17421-6	DATE DRAWN: 05-2019	REVISED DATE

3.0 TEST METHODS AND PROCEDURES

A description of the emissions testing methods and procedures prepared by Mostardi Platt Environmental is presented in Attachment A of this Test Plan.

4.0 PROJECT PERSONNEL

Mostardi Platt will provide the necessary personnel to collect samples as described in Attachment A of this Test Plan.

5.0 TEST SCHEDULE

The testing schedule will be determined upon completion of installation of the RTO/Scrubber and identified in a written notification submitted to IEPA at least 30 days prior to the anticipated test date.

The following testing schedule has been tentatively identified for this project.

- Day 1 – Equipment Set up
- Day 2 – Perform tests for TPM, SO2, CO and HCl
- Day 3 – Perform tests for Metals and THC

6.0 QUALITY ASSURANCE PROCEDURES

The Quality Assurance Procedures that will be utilized by Mostardi Platt Environmental are identified in Attachment A of this Test Plan.

7.0 TEST REPORT

Pursuant to Condition 8.h. of the RTO construction permit, a written test plan will be submitted within 14 days after the test results are compiled and finalized, but no later than 60 days after the date of testing.

The test report, at a minimum, will include:

i. General information describing the test, including the name and identification of the emission source, date of testing, names of personnel performing the tests, and Illinois EPA observers, if any;

ii. A summary of results;

iii. Description of test procedures and method(s), including description and map of emission units and sampling points, sampling train, testing and analysis equipment, and test schedule;

iv. Detailed description of test conditions, including:

   A. List and description of the equipment (including serial numbers or other equipment specific identifiers) tested and process information (i.e., mode(s) of operation, process rate or throughput of the metal shredder, and a description of material processed in the metal shredder;

   B. Control equipment information (i.e., equipment condition and operating parameters (i.e. RTO temperature, scrubbant flow rate, scrubbant pH, and differential pressure of the scrubber) during testing; and

   C. A discussion of any preparatory actions taken (i.e., equipment inspections, shredder feed material separation, shredder/RTO/Scrubber equipment maintenance and repair).

v. Data and calculations, including copies of all raw data sheets and records of laboratory analyses, sample calculations, and data on equipment calibration. Identification of the applicable regulatory standards and permit conditions that the testing was performed to demonstrate compliance with, a comparison of the test results to the applicable regulatory standards and permit conditions, and a statement whether the test(s) demonstrated compliance with the applicable standards and permit conditions;

vi. An explanation of any discrepancies among individual tests, failed tests or anomalous data;

vii. The results and discussion of all quality control evaluation data, including a copy of all quality control data; and

viii. The applicable operating parameters of the pollution control device(s) during testing (temperature, scrubbant flow rate, etc.).

This Page Left Blank

RK
& Associates, Inc.

Emission Test Plan for an Existing Metal Shredder Controlled by an RTO, Quench and Packed Tower Scrubber

General Iron Industries, Inc. – Chicago, Illinois
IEPA Bureau of Air Site ID: 031600BTB
Const. Pmt. No: 18110021

May 24, 2019

ATTACHMENT A

SHREDDER EMISSIONS TESTING METHODS AND PROCEDURES

Mostardi Platt

ED_013190A_00000316-00215

mostardi platt

Compliance Test Protocol

General Iron Industries, Inc.
Scrubber Exhaust Stack and
RTO Inlet and Outlet
1909 North Clifton Avenue
Chicago, Illinois 60614
Protocol No. M193103

ED_013190A_00000316-00217

mostardi platt

Compliance Test Protocol

General Iron Industries, Inc.
Scrubber Exhaust Stack and RTO Inlet and Outlet
1909 North Clifton Avenue
Chicago, Illinois 60614

Protocol Submittal Date
May 24, 2019

Submitted By

Martin Platt
(630) 993-2100, Phone
mplatt@mp-mail.com, Email

© Copyright 2019
All rights reserved in
Mostardi Platt

Protocol No. M193103

TABLE OF CONTENTS

1.0 INTRODUCTION 1

2.0 PROCESS DESCRIPTION 1

3.0 SPECIFIC TEST PROCEDURES 2

4.0 PROJECT SCHEDULE 3

5.0 PROJECT PERSONNEL 3

6.0 TEST METHODOLOGY 3
- Method 1 Sample and Velocity Traverse Determination 3
- Method 2 Volumetric Flow Rate Determination 3
- Method 3A Oxygen (O_2) and Carbon Dioxide (CO_2) Determination 4
- Method 4 H_2O Determination 4
- Method 5 Filterable Particulate Matter (FPM) Determination 4
- Method 202 Condensable Particulate Matter (CPM) Determination 5
- Method 6C Sulfur Dioxide (SO_2) Determination 5
- Method 9 Visual Emission Determination 5
- Method 10 Carbon Monoxide (CO) Determination 5
- Method 25A Total Hydrocarbons (THC) Determination 6
- Modified Method 26 Hydrogen Chloride (HCl) Determination 6
- Method 29 Trace Metals Determination 6

7.0 QUALITY ASSURANCE PROCEDURES 7

GENERAL INFORMATION APPENDED
- Test Section Diagram
- Sample Train Diagrams
- Calculation Nomenclature and Formula
- Calibration Data
- Field Data Sheets

1.0 INTRODUCTION

Mostardi Platt will be performing a compliance test program at the Scrubber exhaust stack and the RTO inlet and RTO outlet at General Iron Industries, Inc. (General Iron) facility in Chicago, Illinois. All testing will be performed as described in the *Code of Federal Regulations*, Title 40, Part 60, Appendix A (40CFR60), Methods 1, 2, 3A, 4, 5, 25A, 26, 29, 202 and the latest revisions thereof.

The identification of individuals associated with the test program is summarized below.

Location	Address	Contact
Test Facility	General Iron Industries, Inc. Chicago Plant 1909 N. Clifton Avenue Chicago, Illinois 60614	Mr. Jim Kallas Environmental Manager (847) 508-9170 jim@general-iron.com
Test Company Representative	Mostardi Platt 888 Industrial Drive Elmhurst, Illinois 60126	Mr. Martin Platt Project Manager (630) 993-2100 mplatt@mp-mail.com

2.0 PROCESS DESCRIPTION

General Iron operates a large hammermill to shred mixed recyclable metal in various forms to produce uniform grades of ferrous and non-ferrous metals. The shredder is located within an enclosure consisting of curtain walls on four sides, and solid plate and metal grating on the roof. The shredder is equipped with an integral water injection system to minimize the potential for fires and deflagrations within the shredder. The water injection rate is monitored by a flow meter and the flow rate is electronically recorded. The shredder is rated for a maximum throughput rate of 500 tph. The actual shredder feed rate is dependent on the type and consistency of the feed material and the ability to consistently feed the scrap to the shredder. For the purposes of this emissions test, the shredder will be operated at a gross shredder feed rate of 400 tph, plus or minus 10%, which represents the maximum achievable shredder feed rate based on the types of materials processed.

For the purposes of this test, the feed to the shredder will consist 20% end of life vehicle (ELVs) with the remainder being general scrap metal. The shredder emissions control system consists of a cyclone and roll media filter for particulate/metals control, a Regenerative Thermal Oxidizer (RTO) for VOM control, and a packed tower scrubber for acid gas control. A large induced draft, located downstream of the scrubber, pulls air from an emissions collection hood that is suspended above the top of the scrubber through the control system. Controlled emissions are discharged to the atmosphere through a dedicated exhaust stack. Shredder and control device operating parameters will be monitored and recorded by General Iron and will be presented in the final test report.

3.0 SPECIFIC TEST PROCEDURES

Detailed test procedures are appended. Test runs will be performed at the Scrubber Exhaust Stack and the RTO inlet and RTO outlet duct for each constituent in accordance with the following United States Environmental Protection Agency (USEPA) methods.

1. Oxygen (O_2) and carbon dioxide (CO_2) test runs will be performed using USEPA Method 3A, 40 CFR Part 60, Appendix A (instrumental analyzer method). The average O_2 and CO_2 gas effluent concentrations for each test run will be determined from the average gas concentrations displayed by the gas analyzers and adjusted for the zero and upscale sampling system bias checks immediately preceding and following each test run.

2. Moisture (H_2O) test runs will be performed in conjunction with the above volumetric flowrate testing in accordance with USEPA Method 4, 40CFR60, Appendix A. H_2O test runs will be recorded concurrent with each VOC test run.

3. Total particulate matter (TPM) test runs will be performed utilizing USEPA Method 5, 40CFR60, Appendix A, and USEPA Method 202, 40CFR51, Appendix M. Each compliance test run will sample a minimum of 40 dry standard cubic feet and be run for a minimum 60-minute test length. Moisture determinations as detailed in USEPA Method 4, 40CFR60, Appendix A, is a component of Method 5.

4. Hydrogen Chloride (HCl) test runs will be performed utilizing USEPA Method 26 40CFR60, Appendix A. Each compliance test run will be 60 minutes in duration and sample a minimum of 45 dry standard cubic feet. An audit sample will be acquired and analyzed per the method.

5. Total selected metals (TSM) test runs will be performed utilizing USEPA Method 29. Each compliance test run will sample a minimum of 45 dry standard cubic feet and be run for a minimum 90-minute test length. Target metals are: Antimony, Arsenic, Barium, Beryllium, Cadmium, Chromium, Cobalt, Copper, Lead, Manganese, Mercury, Nickel, Phosphorus, Selenium, Silver, Thallium, and Zinc. Moisture determinations as detailed in USEPA Method 4, 40CFR60, Appendix A, is a component of Method 29. An audit sample will be acquired and analyzed per the method.

6. Volatile Organic Compound (VOC) emissions at the RTO inlet and outlet will be determined in accordance with USEPA Method 25A, 40CFR60. Regenerative Thermal Oxidizer (RTO) locations will be run simultaneously.

7. Three (3) one-hour sulfur dioxide (SO_2) and carbon monoxide (CO) runs will be performed at the Scrubber outlet in accordance with USEPA Method 10.

4.0 PROJECT SCHEDULE

Mostardi Platt will provide the scope of services described above according to the following schedule:

Day	Activity	On-Site Hours
1	Mobilize to job site and set up test equipment.	4
2	Perform TPM, SO_2, CO and HCl tests.	10
3	Perform TSM and THC tests.	10

5.0 PROJECT PERSONNEL

Mostardi Platt will provide the following personnel to conduct the scope of services described above:

1 Senior Project Manager
4 Test Engineers
2 Test Technician
1 Visible Emission Reader

6.0 TEST METHODOLOGY

Emission testing will be conducted following the methods specified in 40 CFR Part 60, Appendix A. The following methodologies will be performed during the test program:

Method 1 Sample and Velocity Traverse Determination

Test measurement points are selected in accordance with Method 1, 40 CFR, Part 60, Appendix A. The characteristic of the measurement location is summarized below.

Sample Point Selection

Test Location	Stack Diameter	Port Length	Upstream Distance	Downstream Distance	Test Parameter	Number of Ports	Number of Sampling Points
Scrubber Exhaust Stack	74.0"	TBD	TBD	TBD	TPM, TSM	2	16
					HCl, SO_2, and CO		1
RTO Inlet	50.0"	TBD	TBD	TBD	Flow	2	16
					VOC and Moisture		1
RTO Outlet	50.0"	TBD	TBD	TBD	Flow	2	16
					VOC and Moisture		1

Method 2 Volumetric Flow Rate Determination

Gas velocity is measured following Method 2, 40 CFR, Part 60, Appendix A, for purposes of calculating stack gas volumetric flow rate and emission rates on a lb/hr basis. An S-type pitot tube, as a component of the isokinetic sampling trains, differential pressure gauge, thermocouple, and temperature readout are used to determine gas velocity at each sample point. All of the

equipment used is calibrated in accordance with the specifications of the Method. Calibration data is presented in the Appendix of the final report.

Method 3A Oxygen (O_2) and Carbon Dioxide (CO_2) Determination

O_2 and CO_2 concentrations are determined in accordance with Method 3A. A Servomex or ECOM analyzer will be used to determine O_2 and CO_2 concentrations during the isokinetic sampling to determine molecular weight and emissions on a lb/mmbtu basis if applicable. The instrument has a nondispersive infrared-based detector and operated in a range of 0% to the high-level span calibration gas.

Method 4 H_2O Determination

Stack gas moisture content is determined using a Method 4 sampling train as a component of the Method 5 sampling system. In this technique, stack gas is drawn through a series of four impingers. The first two impingers are each charged with 100 mL of deionized, distilled water. Impinger three is left empty and impinger four is charged with clean, dried silica gel. The entire impinger train is measured or weighed before and after each test run to determine the mass of moisture condensed.

During testing, the sample train will be operated in the manner specified in USEPA Method 4. All of the data specified in Method 4 (gas volume, delta H, impinger outlet well temperature, etc.) will be recorded on field data sheets.

All of the equipment used is calibrated in accordance with the specifications of the Method. Calibration data will be appended to the final report.

Method 5 Filterable Particulate Matter (FPM) Determination

Flue gas FPM concentrations and emission rates are determined in accordance with Method 5, 40 CFR, Part 60, Appendix A. The probe and filter housing will be maintained at a temperature of 248°F +/- 25°F. An Environmental Supply Company, Inc. sampling train is used to sample stack gas at an isokinetic rate. Four impingers will be utilized and recovered as detailed in the Method 202 condensable particulate matter determination section of this protocol. The impingers will be weighed prior to and after each test run in order to determine moisture content of the stack gas. The total sample time will be 60 minutes, with sixteen sample points being utilized (8 points per port, 2 total ports). A minimum of 40 dry standard cubic feet will be sampled for each run.

Particulate matter in a glass-lined, sample probe will be recovered utilizing acetone; a minimum of three passes of the probe brush through the entire probe will be performed, followed by a visual inspection of the acetone exiting the probe. If the acetone solution exiting the probe is clear, the wash will be considered complete, if not, another pass of the brush through the probe will be made and inspected until the solution is clear. The nozzle will then be removed from the probe and cleaned in a similar manner, utilizing an appropriately sized nozzle brush. The filter housing will be washed a minimum of three times with acetone and inspected for cleanliness, and the filter will be placed in its' corresponding petri dish. The acetone wash and the filter will be labeled and marked, and then a preliminary analysis of the filter and acetone wash will be performed with final analysis being performed off site by Mostardi Platt personnel in accordance with the method.

All of the equipment used is calibrated in accordance with the specifications of the Method. Calibration data is presented in the Appendix of the final report.

Method 202 Condensable Particulate Matter (CPM) Determination

Flue gas condensable particulate concentrations and emission rates are determined in accordance with the Method 202, in conjunction with Method 5 filterable particulate matter sampling. Condensable particulate matter is collected in the impinger portion of the sampling train.

CPM is collected in impingers after filterable particulate matter material is collected utilizing Method 5. The organic and aqueous fractions are then taken to dryness and weighed. The total of all fractions represents the CPM. Compared to the December 17, 1991 promulgated Method 202, this Method includes the addition of a condenser, followed by a water dropout impinger immediately after the final heated filter. One modified Greenburg Smith impinger and an ambient temperature filter follow the water dropout impinger. A schematic of the sampling train configured with these updates is found in the Appendix.

CPM is collected in the water dropout, modified Greenburg Smith impinger and ambient filter portion of the sampling train as described in this Method. The impinger contents are purged with nitrogen (N_2) immediately after sample collection to remove dissolved sulfur dioxide (SO_2) gases from the impingers. The impinger solution is then extracted with DI water, acetone, and hexane. The organic and aqueous fractions are dried and the residues weighed. The total of the aqueous, organic, and ambient filter fractions represents the CPM. A field blank will be collected.

Method 6C Sulfur Dioxide (SO_2) Determination

Method 6C, 40CFR60, is used to determine sulfur dioxide (SO_2) emissions from the test location. A gas sample is continuously extracted from the stream through a dilution probe gas conditioning system. A portion of the gas stream is conveyed to the gas analyzer for determination of SO_2 content. Prior to sampling, the SO_2 analyzer is zeroed and calibrated with high-range, mid-range, and zero gases. After each test run, zero and mid-range calibration gases are introduced to verify calibration.

Method 9 Visual Emission Determination

Visible emissions are determined in accordance with Method 9. The observer will stand at a distance providing a clear view of the emissions with the sun oriented in the 140° sector to their back. As much as possible, the line of vision is approximately perpendicular to the plume direction. Opacity observations are made at the point of greatest opacity in the portion of the plume where condensed water vapor is not present. Observations are made at 15-second intervals for the duration of the test run. Visible emissions observations are conducted and recorded by a certified visual emissions observer. A copy of the observer's certification will be presented in the Appendix of the final report.

Method 10 Carbon Monoxide (CO) Determination

Stack gas CO concentrations and emission rates are determined in accordance with Method 10. A Thermo Fischer Scientific 48 Series Gas Filter Correlation Carbon Monoxide Analyzer is used to determine CO concentrations, in the manner specified in the Method. The instrument operates in a range of 0 ppm to the high-level span calibration gas to be determined on site.

A list of calibration gases used and the results of all calibration and other required quality assurance checks will be appended to the final report. Copies of calibration gas certifications will also be appended to the final report. This testing will meet the performance specifications as outlined in the Method.

Method 25A Total Hydrocarbons (THC) Determination

Total hydrocarbon (THC) concentrations and emission rates are determined at the RTO inlet and outlet ducts in accordance with Method 25A. The inlet duct sampling will require an unheated sintered metal filter to minimize aerosols from entering the sample line. A TECO 51i High Temperature/Flame Ionization Detector (FID) will be used to determine THC concentrations. Stack gas will be delivered to the system via a Teflon® sampling line, heated to a minimum temperature of 250°F.

The system will be calibrated before and after each test run using certified calibration gases of propane for the THC determination. Calibration data and gas cylinder certifications will be included in the appendix of the test report.

Modified Method 26 Hydrogen Chloride (HCl) Determination

Stack gas hydrogen chloride concentrations and emission rates are determined in accordance with a modified Method 26, 40CFR60, Appendix A. An Environmental Supply Company sampling train will be used to sample flue gas, in the manner specified in the Method at one sample point modified to use large impingers. Analyses of the samples collected will be conducted by ion chromatography. All of the equipment used will be calibrated in accordance with the specifications of the Method. An audit sample will be acquired and analyzed per the method.

Method 29 Trace Metals Determination

Stack gas trace mercury metals concentrations and emission rates are determined in accordance with Method 29, 40CFR60, Appendix A. An Environmental Supply Company, Inc. sampling train is used to sample stack gas, in the manner specified in the method

The first impinger will be used as a knockout, impingers two and three are loaded with 100 mL each of 5% HNO_3/10% H_2O_2. The fourth impinger remains empty. The fifth and sixth impingers are loaded with 100mL each of acidic potassium permanganate. The seventh impinger is filled with silica gel. The impingers will be weighed prior to and after each test run in order to determine moisture content of the stack gas. The total sample time will be 90 minutes, with twelve sample points being utilized (3 points per port, 4 total ports). A minimum of 45 dry standard cubic feet will be sampled for each run. The first four impingers are recovered using a 0.1N nitric acid rinse. Impingers five and six are recovered first with 100mL total of acidic potassium permanganate, then 100mL of DI, and finally with 25mL of 8N HCl.

Sample analysis is conducted by an approved laboratory for particle bound mercury from the nozzle, probe, and filter catch, and analyzed for vapor phase mercury from the impinger catch. All of the equipment used was calibrated in accordance with the specifications of the Method. Calibration data will be presented in the appendix of the final report. An audit sample will be acquired and analyzed per the method.

7.0 QUALITY ASSURANCE PROCEDURES

Mostardi Platt recognizes the previously described reference methods to be very technique oriented and attempts to minimize all factors that can increase error by implementing its Quality Assurance Program into every segment of its testing activities.

Copies of all pertinent calibration data (calibration gas certifications, Pitot tubes, dry gas meters, nozzles, etc.) will be given to the on-site observer from the observing agency prior to testing and included in the final test report.

Calculations are performed by computer. An explanation of the nomenclature and calculations along with the complete test results will be appended in the final report. Also, to be appended, are the calibration data and copies of the raw field data sheets. Analyzer interference data is kept on file at Mostardi Platt.

All the data necessary for the agency to reproduce the reported results will be included in the final test report. The data shall include, but not be limited to DAS printouts, unit operational data (e.g. steam flow, etc.) calibration data, uncorrected run averages, raw lab analysis (including chromatograms, spectra or other instrument output, and calibration and QA/QC data) with summary tables, and raw field data.

Dry gas meters are calibrated according to methods described in the Code of Federal Regulations. The dry test meters measure the test sample volumes to within 2 percent at the flowrate and conditions encountered during sampling.

EQUAL AREA TRAVERSE FOR ROUND DUCTS

(TPM and TSM Scrubber testing)

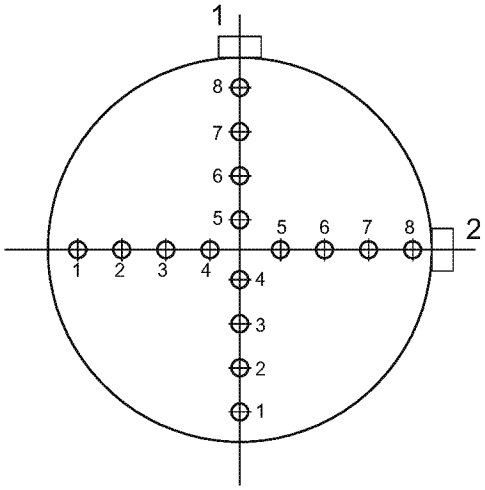

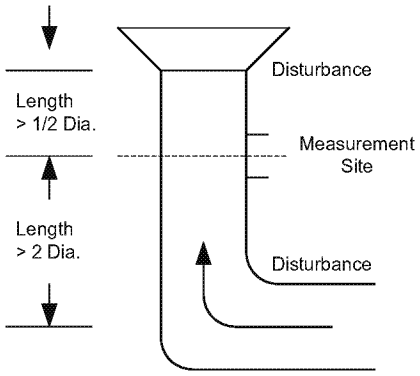

Job:	General Iron Industries, Inc. Chicago Facility Chicago, Illinois
Tentative Test Dates:	July 30, 2019
Unit:	Scrubber Exhaust Stack
Test Location:	Stack
Stack Diameter:	74 inches
Stack Area:	29.867 Square Feet
No. Points Across Diameter:	8
No. of Ports:	2
Port Length:	TBD
Upstream Distance:	TBD
Downstream Distance:	TBD

GASEOUS TRAVERSE FOR ROUND DUCTS

(Scrubber Exhaust HCl, SO_2, and CO testing)

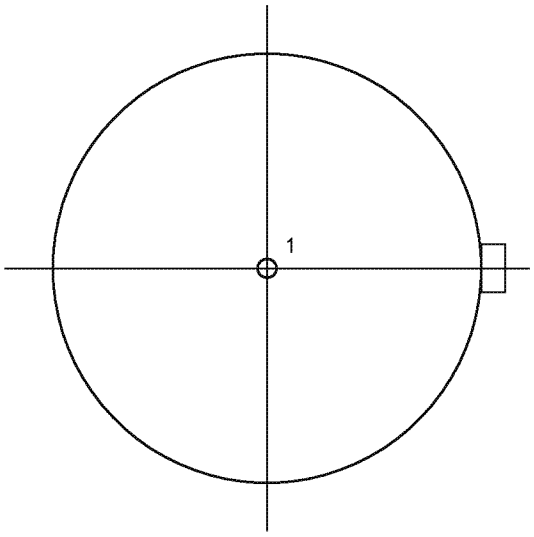

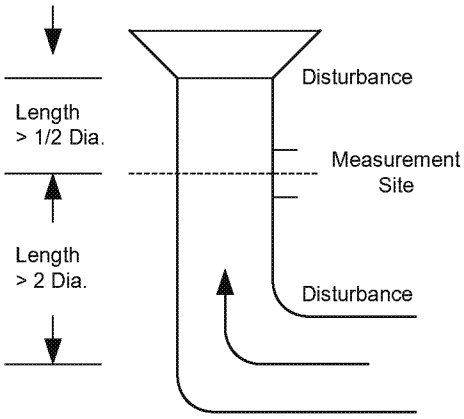

Job:	General Iron Industries, Inc. Chicago Facility Chicago, Illinois
Tentative Test Dates:	July 30, 2019
Unit:	Scrubber Exhaust Stack
Test Location:	Stack
Stack Diameter:	74 inches
Stack Area:	29.867 Square Feet
No. Points Across Diameter:	1
No. of Ports:	1
Port Length:	TBD
Upstream Distance:	TBD
Downstream Distance:	TBD

EQUAL AREA TRAVERSE FOR ROUND DUCTS

(Flows at RTO Inlet and Outlet)

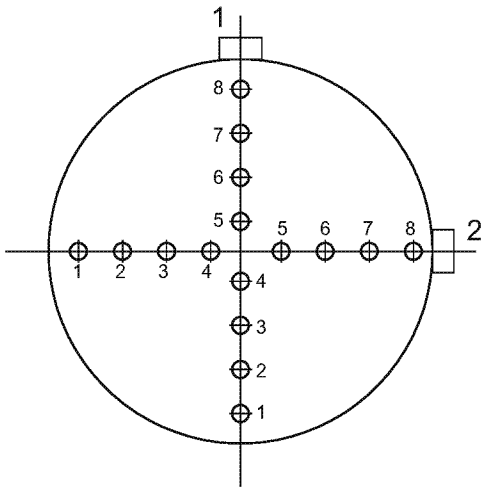

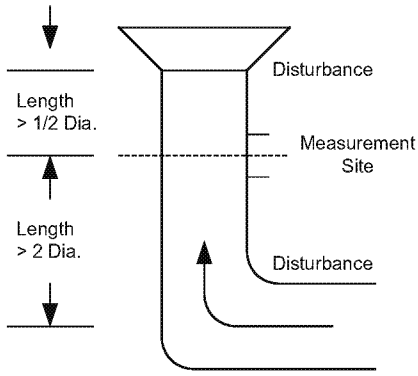

Job:	General Iron Industries, Inc. Chicago Facility Chicago, Illinois
Tentative Test Dates:	July 31, 2019
Unit:	RTO
Test Location:	Inlet and Outlet (identical)
Stack Diameter:	50 inches
Stack Area:	13.635 Square Feet
No. Points Across Diameter:	8
No. of Ports:	2
Port Length:	TBD
Upstream Distance:	TBD
Downstream Distance:	TBD

GASEOUS TRAVERSE FOR ROUND DUCTS

(Inlet and Outlet 25a)

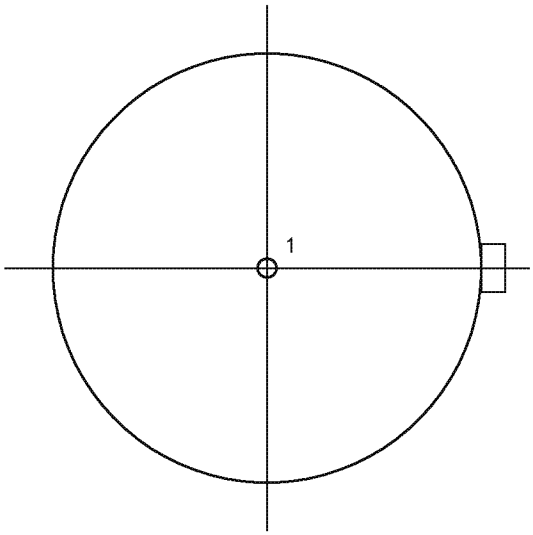

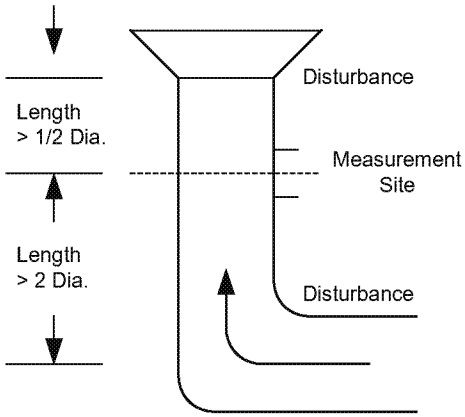

Job:	General Iron Industries, Inc. Chicago Facility Chicago, Illinois
Tentative Test Dates:	July 31, 2019
Unit:	RTO
Test Location:	Inlet and Outlet (identical)
Stack Diameter:	50 inches
Stack Area:	13.635 Square Feet
No. Points Across Diameter:	8
No. of Ports:	2
Port Length:	TBD
Upstream Distance:	TBD
Downstream Distance:	TBD

USEPA Method 2- Type S Pitot Tube Manometer Assembly

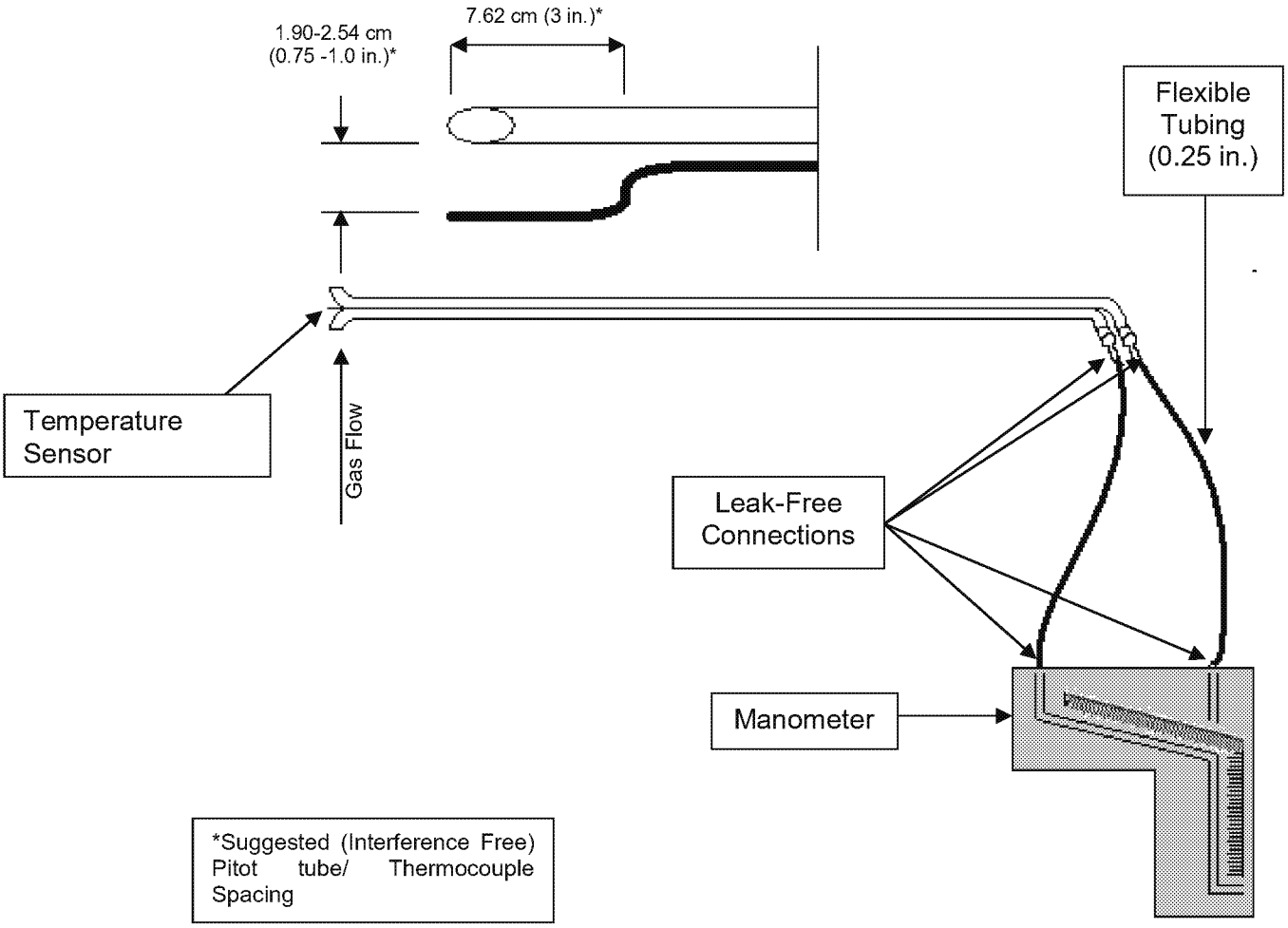

USEPA Methods 3A, 6C, and 10 Extractive Gaseous Sampling Diagram

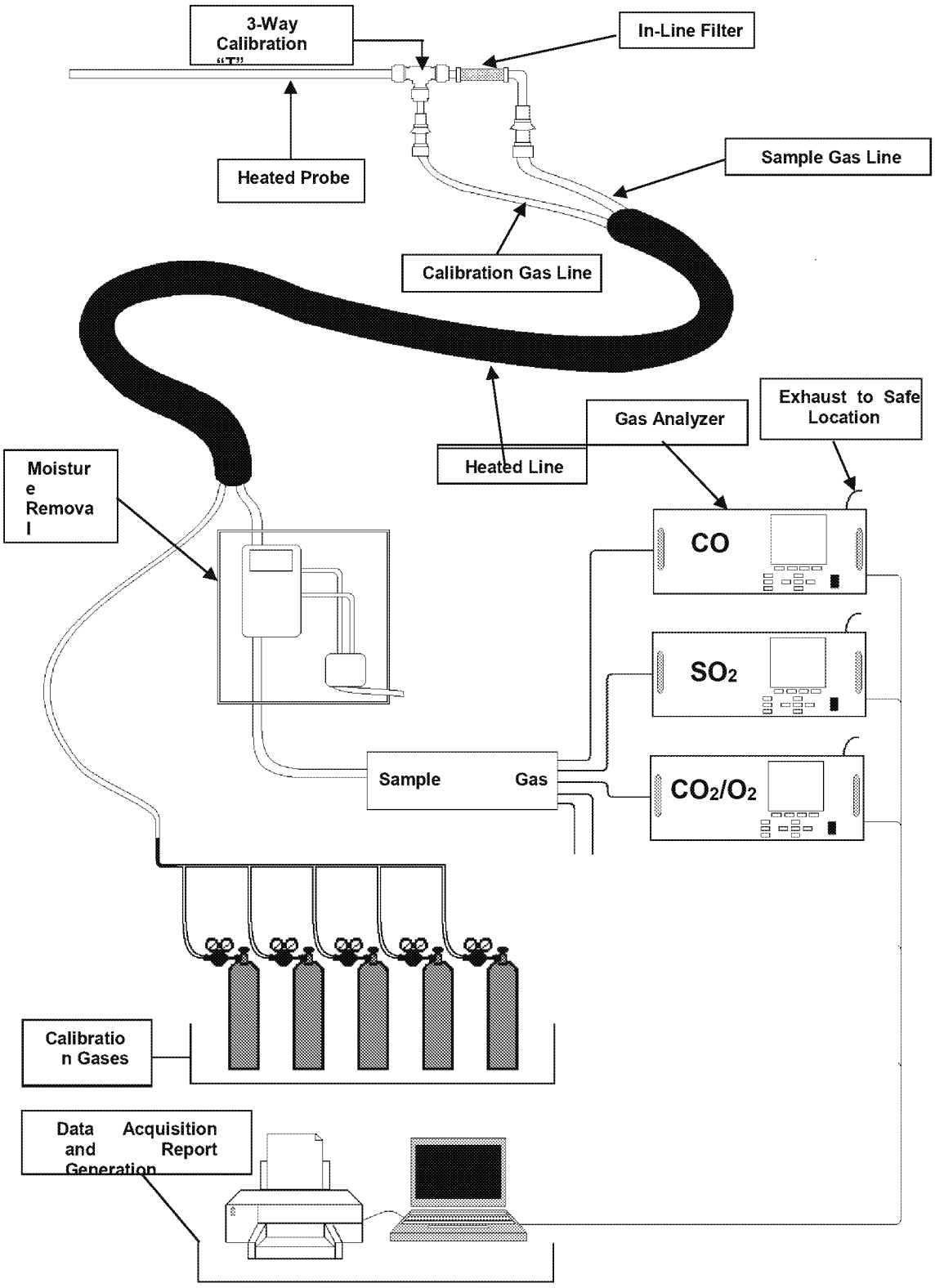

USEPA Method 3A - Integrated Oxygen/Carbon Dioxide Sample Train Diagram Utilizing ECOM To Measure From Sample Exhaust

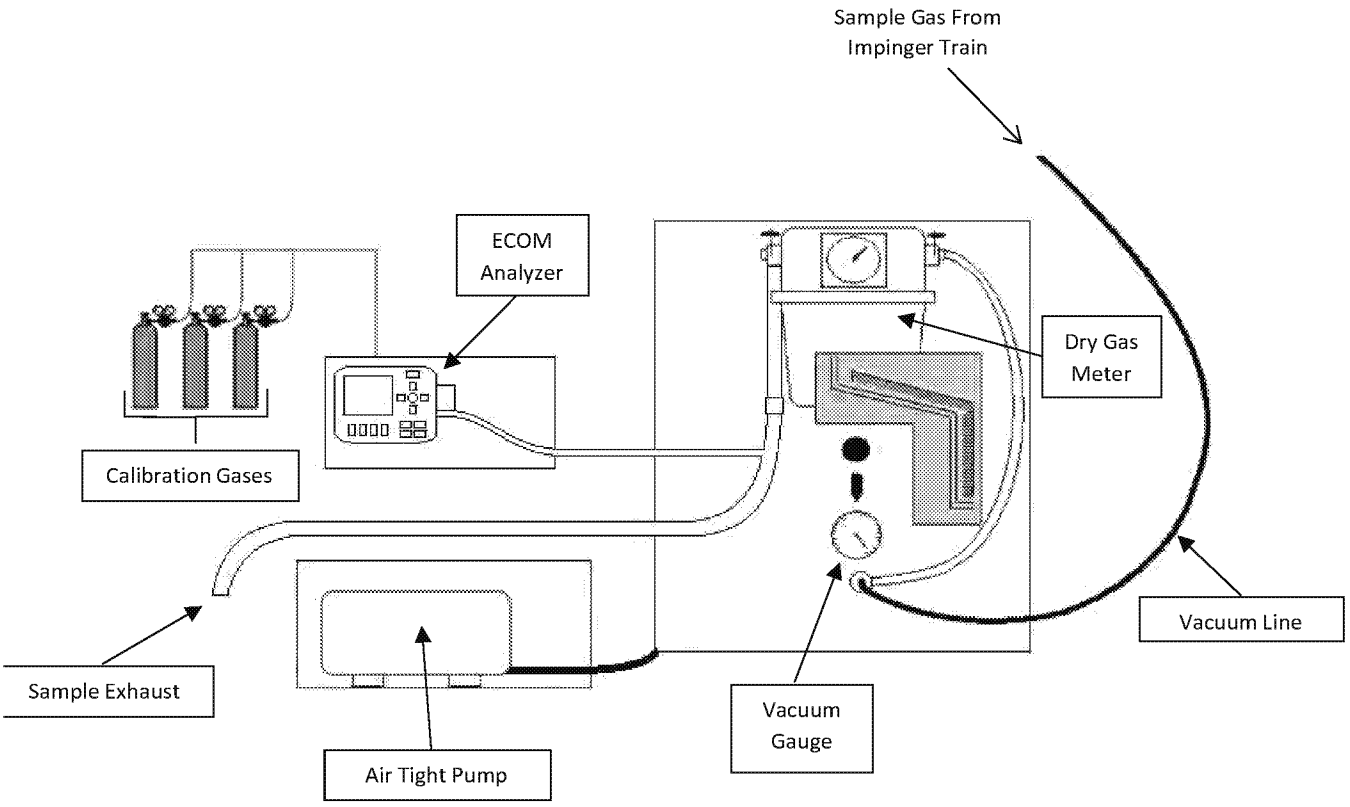

USEPA Method 4- Moisture Content Sample Train Diagram

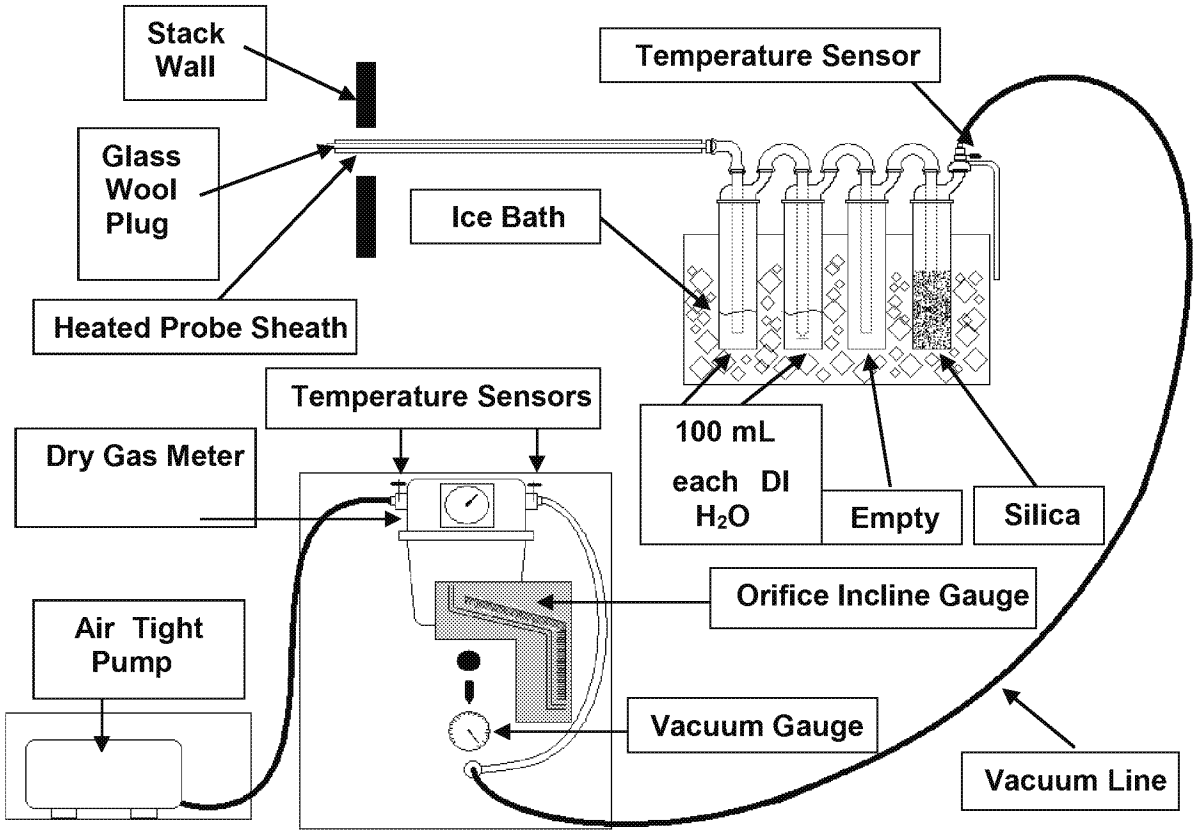

USEPA Method 5/202- Condensable Particulate Matter

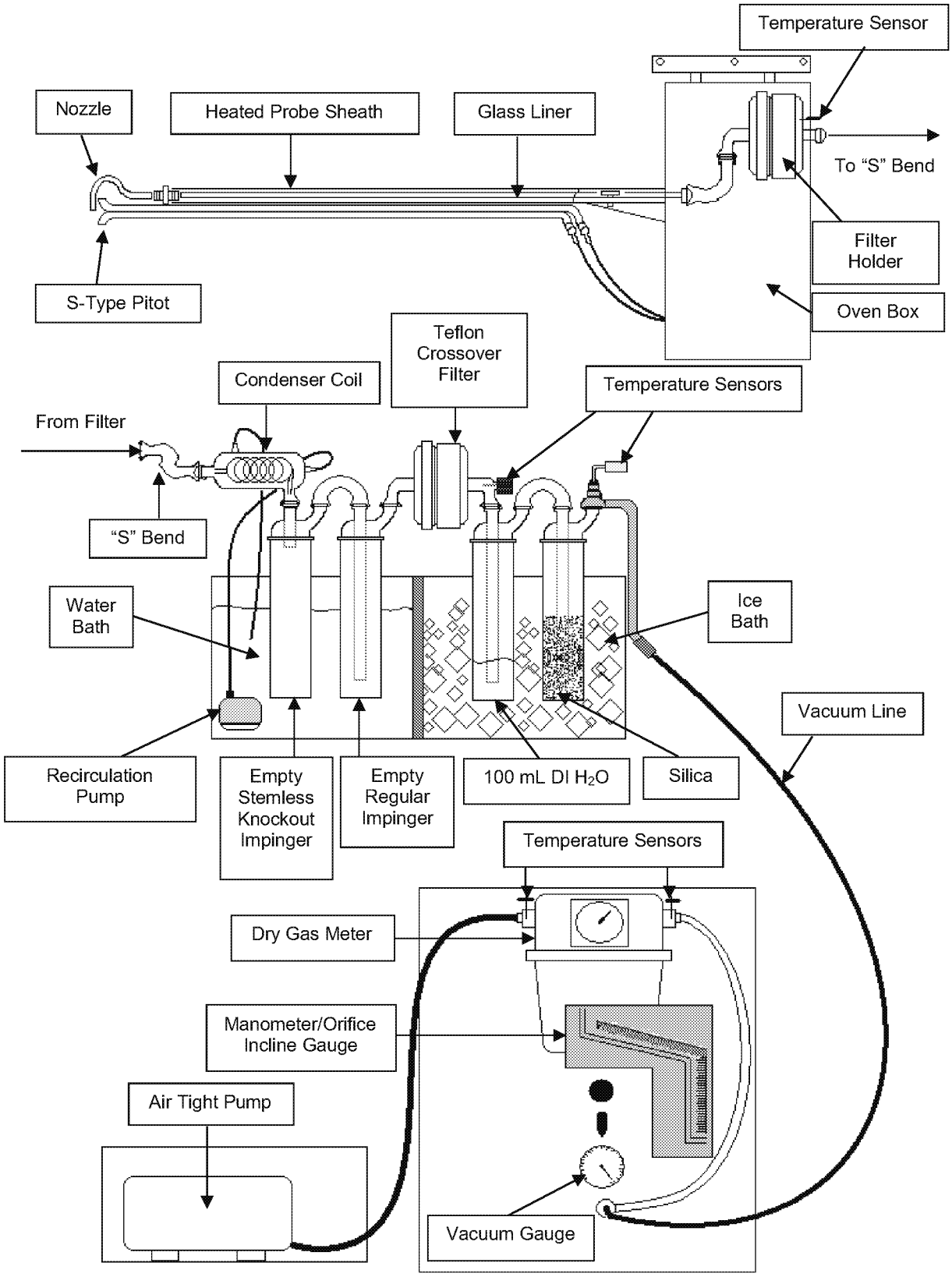

USEPA Modified Method 26 – HCl Sample Train Diagram

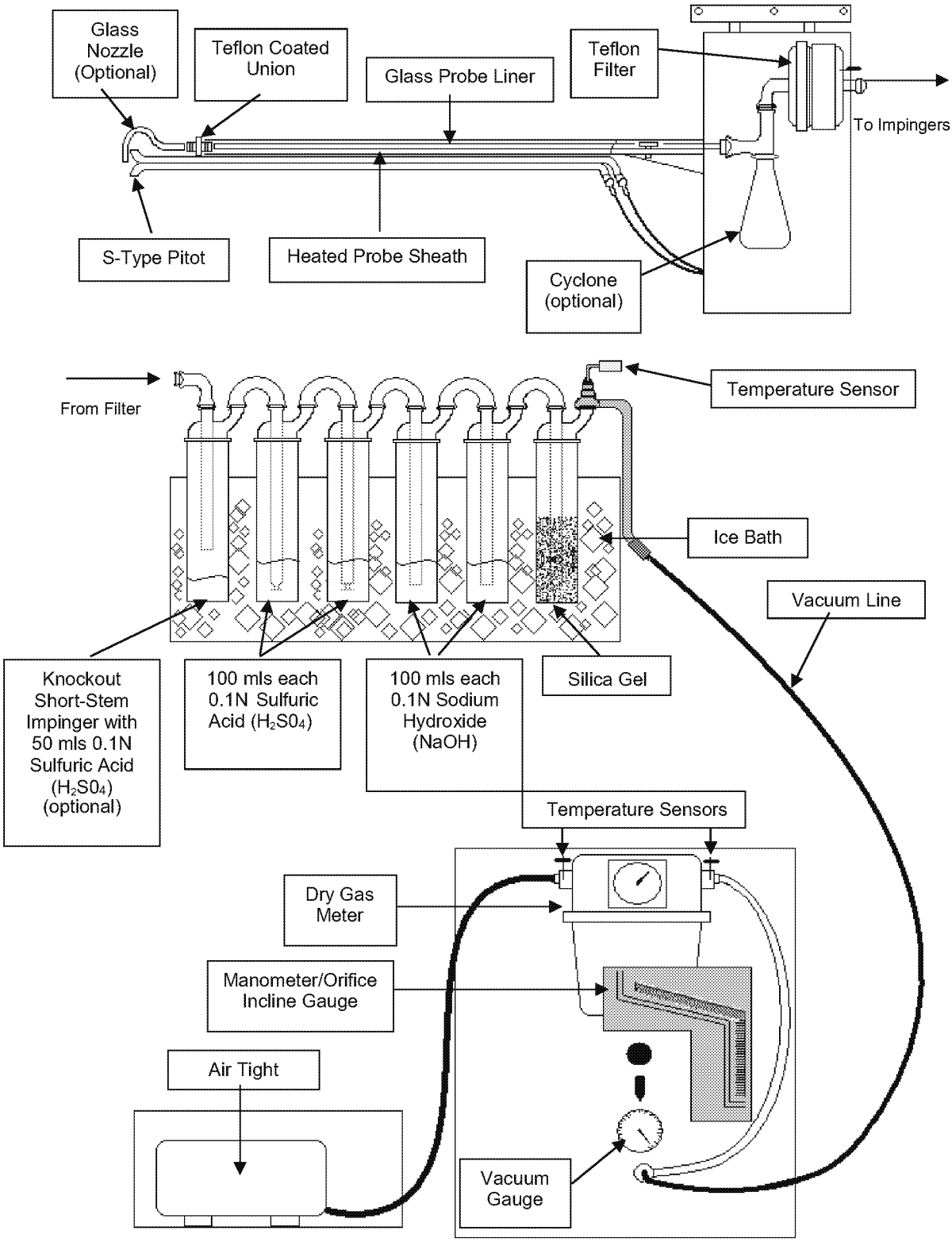

USEPA Method 29- Metals Sample Train Diagram (with Hg)

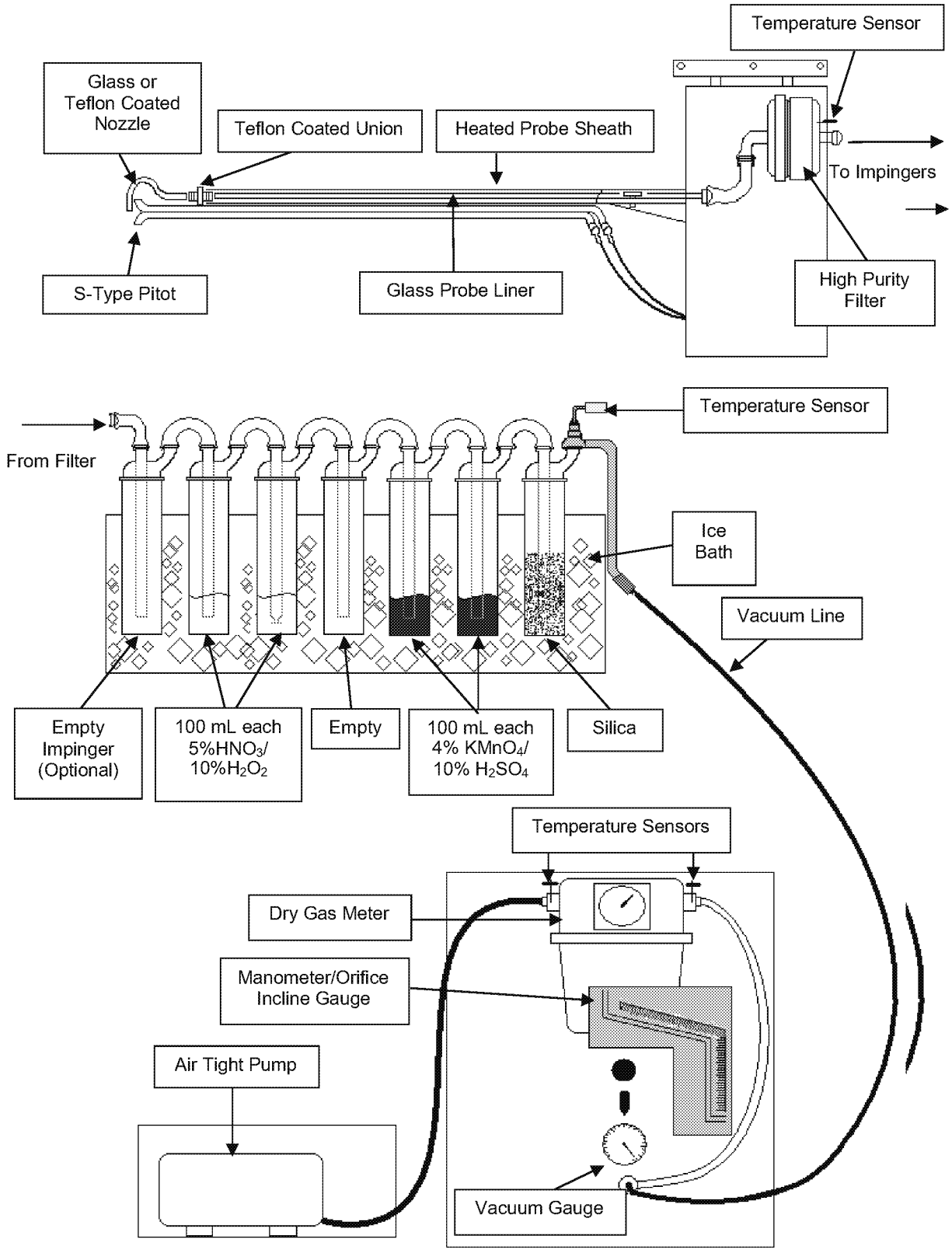

USEPA Method 25A – Total Gaseous Organic Compound Sample Train

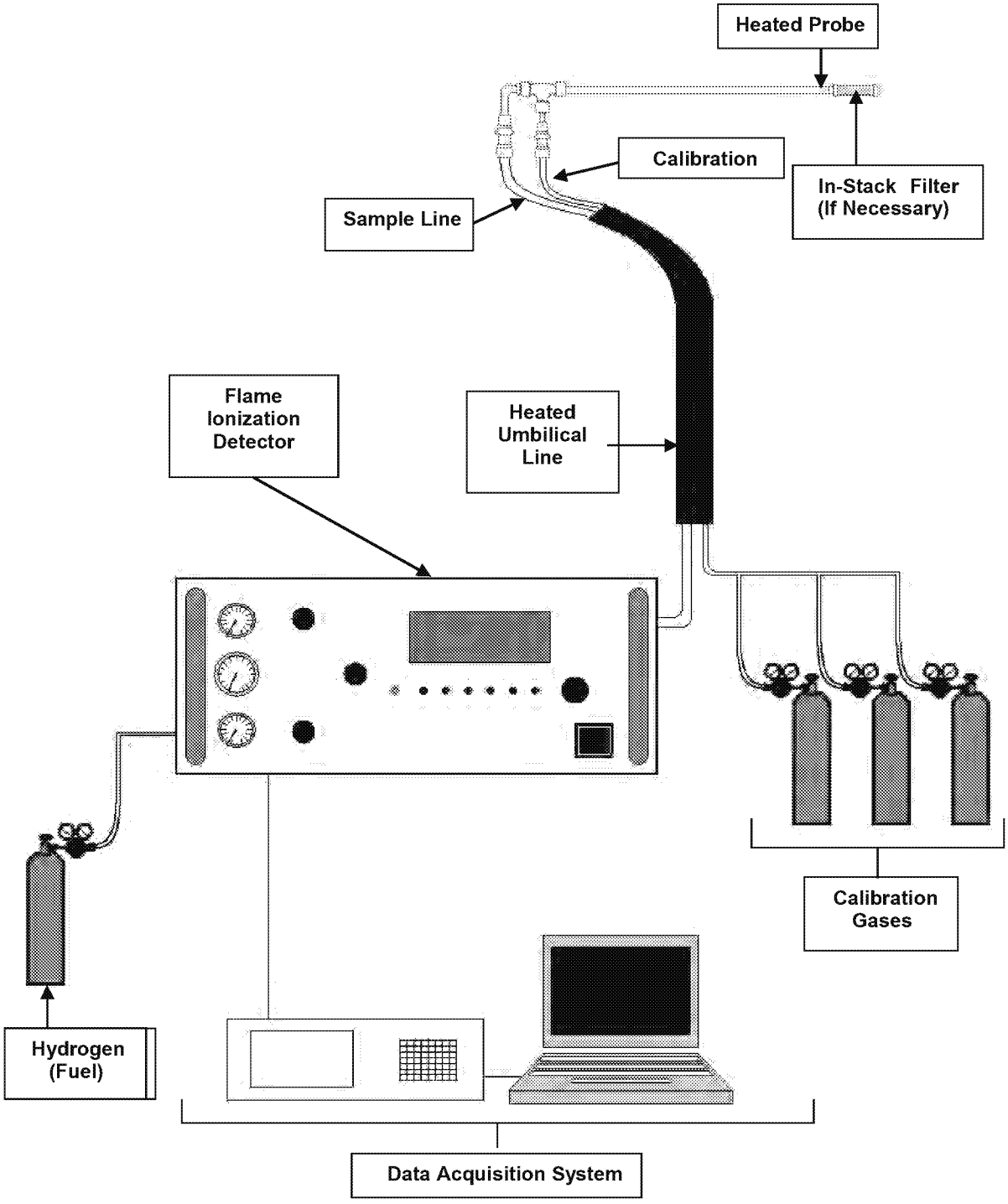

MOSTARDI PLATT

Natural Gas Emission Rate Calculations

A pollutant emission rate (E), expressed as pounds of pollutant per million Btu heat input from the fuel combusted can be calculated as follows:

A. The pollutant concentration in pounds per dry standard cubic feet is calculated as follows:

$C = C_s/7000$

where, C = pollutant concentration, lb/dscf
C_s = pollutant concentration, grains/dscf

B. If fuel flow is monitored and the fuel combusted during the test is sampled and analyzed for gross calorific value, then E can be calculated as follows:

$$E = \frac{Q_{sd}C}{\text{fuel flow rate (lb/hr) GCV}} \times 10^6$$

where, E = lbs per million Btu
GCV = gross calorific value, Btu/lb
Q_{sd} = dry volumetric gas flow at standard conditions, dscf/hr

C. If an integrated gas sample is taken during the test and analyzed for $\%CO_2$ or $\%O_2$, dry basis by volume, with an approved USEPA Method 3 or 3A gas analyzer, then E is calculated as follows:

$$E = CF_c \frac{100}{\%CO_2} \text{ or } E = CF_d \frac{20.9}{(20.9 - \%O_2)}$$

where, $\%CO_2$ = Carbon Dioxide, weight percent
$\%O_2$ = Oxygen, weight percent
F_c = a factor representing a ratio of the volume of carbon dioxide generated to the calorific value of the specified fuel type combusted, 1040 scf CO_2/million Btu.
F_d = a factor representing a ratio of the volume of dry flue gases generated to the calorific value of the specified fuel type combusted, 8710 dscf/million Btu.

D. If fuel sample increments are taken and composited during the test, an ultimate analysis is performed and the GCV is determined, then

$$F_c = \frac{321 \times 10^3(\%C)}{GCV}$$

$$F_d = \frac{[3.64(\%H) + 1.53(\%C) + 0.57(\%S) + 0.14(\%N) - 0.46(\%O_2)]}{GCV} \times 10^6$$

where, %H = Hydrogen, weight percent;
%C = Carbon, weight percent;
%S = Sulfur, weight percent;
%N = Nitrogen, weight percent;
%O = Oxygen, weight percent.

MOSTARDI PLATT
Volumetric Flow Nomenclature

A = Cross-sectional area of stack or duct, ft^2

B_{ws} = Water vapor in gas stream, proportion by volume

C_p = Pitot tube coefficient, dimensionless

M_d = Dry molecular weight of gas, lb/lb-mole

M_s = Molecular weight of gas, wet basis, lb/lb-mole

M_w = Molecular weight of water, 18.0 lb/lb-mole

P_{bar} = Barometric pressure at testing site, in. Hg

P_g = Static pressure of gas, in. Hg (in. H_2O/13.6)

P_s = Absolute pressure of gas, in. Hg = $P_{bar} + P_g$

P_{std} = Standard absolute pressure, 29.92 in. Hg

Q_{acfm} = Actual volumetric gas flow rate, acfm

Q_{sd} = Dry volumetric gas flow rate corrected to standard conditions, dscf/hr

R = Ideal gas constant, 21.85 in. Hg-ft^3/°R-lb-mole

T_s = Absolute gas temperature, °R

T_{std} = Standard absolute temperature, 528°R

v_s = Gas velocity, ft/sec

$V_{w(std)}$ = Volume of water vapor in gas sample, corrected to standard conditions, scf

Y = Dry gas meter calibration factor

Δp = Velocity head of gas, in. H_2O

K_1 = 17.647 °R/in. Hg

%EA = Percent excess air

$\%CO_2$ = Percent carbon dioxide by volume, dry basis

$\%O_2$ = Percent oxygen by volume, dry basis

$\%N_2$ = Percent nitrogen by volume, dry basis

0.264 = Ratio of O_2 to N_2 in air, v/v

0.28 = Molecular weight of N_2 or CO, divided by 100

0.32 = Molecular weight of O_2 divided by 100

0.44 = Molecular weight of CO_2 divided by 100

13.6 = Specific gravity of mercury (Hg)

MOSTARDI PLATT

Volumetric Air Flow Calculations

$$Vm\ (std) = 17.647 \times Vm \times \left[\frac{\left(P_{bar} + \left[\frac{DH}{13.6}\right]\right)}{(460 + Tm)}\right] \times Y$$

$$Vw\ (std) = 0.0471 \times Vlc$$

$$Bws = \left[\frac{Vw\ (std)}{Vw\ (std) + Vm\ (std)}\right]$$

$$Md = (0.44 \times \%CO_2) + (0.32 \times \%O_2) + [0.28 \times (100 - \%CO_2 - \%O_2)]$$

$$Ms = Md \times (1 - Bws) + (18 \times Bws)$$

$$Vs = \sqrt{\frac{(Ts + 460)}{Ms \times Ps}} \times \sqrt{DP} \times Cp \times 85.49$$

$$Acfm = Vs \times Area\ (of\ stack\ or\ duct) \times 60$$

$$Scfm = Acfm \times 17.647 \times \left[\frac{Ps}{(460 + Ts)}\right]$$

$$Scfh = Scfm \times 60 \frac{min}{hr}$$

$$Dscfm = Scfm \times (1 - Bws)$$

MOSTARDI PLATT

Particulate Nomenclature

A = Cross-sectional area of stack or duct, square feet
A_n = Cross-sectional area of nozzle, square feet
B_{ws} = Water vapor in gas stream, by volume
C_a = Acetone blank residue concentration, g/g
C_{acf} = Concentration of particulate matter in gas stream at actual conditions, gr/acf
C_p = Pitot tube coefficient
C_s = Concentration of particulate matter in gas stream, dry basis, corrected to standard conditions, gr/dscf
IKV = Isokinetic sampling variance, must be 90.0 % ≤ IKV ≤ 110.0%
M_d = Dry molecular weight of gas, lb/lb-mole
M_s = Molecular weight of gas, wet basis, lb/lb-mole
M_w = Molecular weight of water, 18.0 lb/lb-mole
m_a = Mass of residue of acetone after evaporation, grams
P_{bar} = Barometric pressure at testing site, inches mercury
P_g = Static pressure of gas, inches mercury (inches water/13.6)
P_s = Absolute pressure of gas, inches mercury = $P_{bar} + P_g$
P_{std} = Standard absolute pressure, 29.92 inches mercury
Q_{acfm} = Actual volumetric gas flow rate, acfm
Q_{sd} = Dry volumetric gas flow rate corrected to standard conditions, dscfh
R = Ideal gas constant, 21.85 inches mercury cubic foot/°R-lb-mole
T_m = Dry gas meter temperature, °R
T_s = Gas temperature, °R
T_{std} = Absolute temperature, 528°R
V_a = Volume of acetone blank, ml
V_{aw} = Volume of acetone used in wash, ml
W_a = Weight of residue in acetone wash, grams
m_n = Total amount of particulate matter collected, grams
V_{1c} = Total volume of liquid collected in impingers and silica gel, ml
V_m = Volume of gas sample as measured by dry gas meter, dcf
$V_{m(std)}$ = Volume of gas sample measured by dry gas meter, corrected to standard conditions, dscf
v_s = Gas velocity, ft/sec
$V_{w(std)}$ = Volume of water vapor in gas sample, corrected to standard conditions, scf
Y = Dry gas meter calibration factor
ΔH = Average pressure differential across the orifice meter, inches water
Δp = Velocity head of gas, inches water
ρ_a = Density of acetone, 0.7855 g/ml (average)
ρ_w = Density of water, 0.002201 lb/ml
θ = Total sampling time, minutes
K_1 = 17.647 °R/in. Hg
K_2 = 0.04707 ft^3/ml
K_4 = 0.09450/100 = 0.000945
K_p = Pitot tube constant, $85.49 \frac{\text{ft}}{\text{sec}} \left[\frac{(\text{lb/lb} - \text{mole})(\text{in. Hg})}{(^\circ\text{R})(\text{in. H}_2\text{O})} \right]^{1/2}$
%EA = Percent excess air
$\%CO_2$ = Percent carbon dioxide by volume, dry basis
$\%O_2$ = Percent oxygen by volume, dry basis
%CO = Percent carbon monoxide by volume, dry basis
$\%N_2$ = Percent nitrogen by volume, dry basis
0.264 = Ratio of O_2 to N_2 in air, v/v
28 = Molecular weight of N_2 or CO
32 = Molecular weight of O_2
44 = Molecular weight of CO_2
13.6 = Specific gravity of mercury (Hg)

MOSTARDI PLATT

Particulates Calculation Formulas

1. $$V_{w(std)} = V_{lc}\left(\frac{\rho_w}{M_w}\right)\left(\frac{RT_{std}}{P_{std}}\right) = K_2 V_{lc}$$

2. $$V_{m(std)} = V_m Y \left(\frac{T_{std}}{T_m}\right)\left(\frac{(P_{bar} + (\frac{\Delta H}{13.6}))}{P_{std}}\right) = K_1 V_m Y \frac{(P_{bar} + (\frac{\Delta H}{13.6}))}{T_m}$$

3. $$B_{ws} = \frac{V_{w(std)}}{(V_{m(std)} + V_{w(std)})}$$

4. $$M_d = 0.44(\%CO_2) + 0.32(\%O_2) + 0.28(\%N_2)$$

5. $$M_s = M_d(1 - B_{ws}) + 18.0(B_{ws})$$

6. $$C_a = \frac{m_a}{V_a \rho_a}$$

7. $$W_a = C_a V_{aw} \rho_a$$

8. $$C_{acf} = 15.43 K_i \left(\frac{m_n P_s}{V_{w(std)} + V_{m(std)}\ T_s}\right)$$

9. $$C_S = (15.43 \text{ grains/gram})\ (m_n / V_{m(std)})$$

10. $$v_s = K_p C_p \sqrt{\frac{\Delta P\ T_s}{P_s M_s}}$$

11. $$Q_{acfm} = v_s A(60_{sec/min})$$

12. $$Q_{sd} = (3600_{sec/hr})(1 - B_{ws})\ v_s \left(\frac{T_{std} P_s}{T_s P_{std}}\right) A$$

13. $$E \text{ (emission rate, lbs/hr)} = Q_{std}(C_s / 7000 \text{ grains/lb})$$

14. $$IKV = \frac{T_s V_{m(std)} P_{std}}{T_{std} v_s \theta A_n P_s 60(1 - B_{ws})} = K_4 \frac{T_s V_{m(std)}}{P_s v_s A_n \theta (1 - B_{ws})}$$

15. $$\%EA = \left(\frac{\%O_2 - (0.5\%CO)}{0.264\%N_2 - (\%O_2 - 0.5\%CO)}\right) \times 100$$

MOSTARDI PLATT

Calculations for Hydrogen Chloride by Method 26 or 26A

Concentration

$$\frac{\text{lb HCl}}{\text{dscf}} = \frac{\mu\text{g HCl in sample}}{4.536 \times 10^8 \times \text{dscf}}$$

where:

$4.536 \times 10^8 = \mu g$ lb

dscf = Volume of gas sampled

$$\mu g/\text{lb HCl} = \mu g\ \text{Cl} \times \frac{36.453}{35.453}$$

Parts Per Million

$$\text{ppm HCl} = \frac{\text{lb HCl}}{\text{dscf}} \div \frac{36.453}{385 \times 10^6}$$

where:

385 = Volume of 1 lb mole of gas at 68°F and 29.92 in. Hg

10^6 = Conversion of ppm v/v

Emission Rate

lb HCl/dscf × dscfm × 60 min/hr = lb/hr HCl

MOSTARDI PLATT

Trace Metal (Including Mercury) Sample Calculations

Concentration

$$\frac{\mu g}{m^3} = \frac{\mu g\ of\ trace\ metal}{dscf\ volume\ sampled \times 0.02832 \frac{m^3}{ft^3}}$$

Emission Rate

$$\frac{\mu g\ of\ sample \times \frac{1 \times 10^{-6} grams}{\mu g}}{453.6\ gr/lb} = lbs\ of\ trace\ metal$$

$$\frac{lbs\ of\ trace\ metal}{V_m(std) sample} \times dscfm \times 60 \frac{min}{hr} = lbs\ of\ trace\ metal/hr$$

Procedures for Method 5 and Flow Calibration

Nozzles

The nozzles are measured according to Method 5, Section 10.1

Dry Gas Meters

The test meters are calibrated according to Method 5, Section 10.3 and 16.1. and "Procedures for Calibrating and Using Dry Gas Volume Meters as Calibration Standards" by P.R. Westlin and R.T. Shigehara, March 10, 1978.

Analytical Balance

The accuracy of the analytical balance is checked with Class S, Stainless Steel Type 303 weights manufactured by F. Hopken and Son, Jersey City, New Jersey.

Temperature Sensing Devices

The potentiometer and thermocouples are calibrated utilizing a NIST traceable millivolt source.

Pitot Tubes

The pitot tubes utilized during this test program are manufactured according to the specification described and illustrated in the *Code of Federal Regulations*, Title 40, Part 60, Appendix A, Methods 1 and 2. The pitot tubes comply with the alignment specifications in Method 2, Section 10.1; and the pitot tube assemblies are in compliance with specifications in the same section.

Dry Gas Meter/Control Module Calibration Diagram

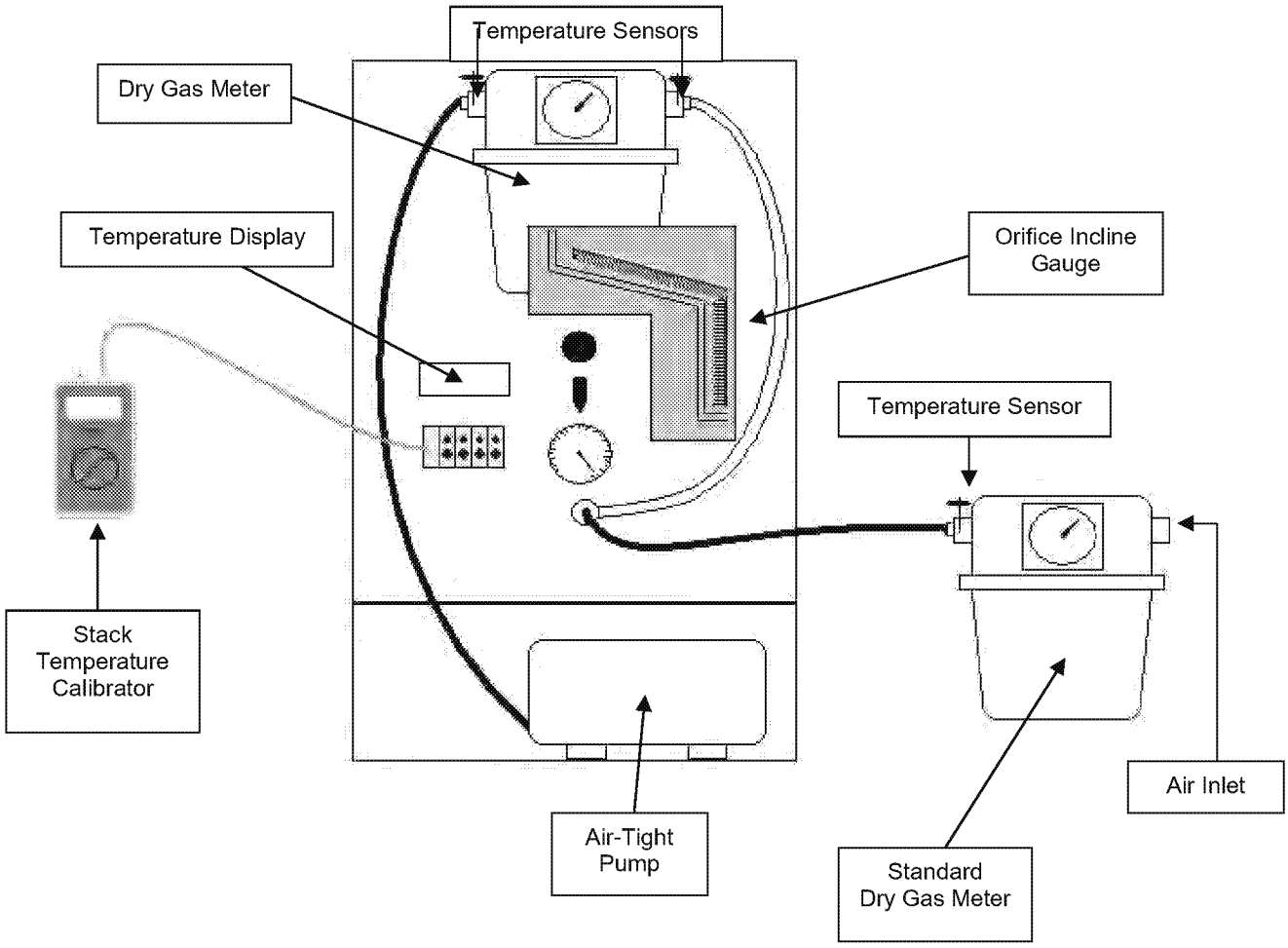

Dry Gas Meter No.	CM-1	Date:	
Standard Meter No.		Calibrated By:	
Standard Meter (Y)		Barometric Pressure:	

Run Number		Orifice Setting in H_2O Chg (H)	Standard Meter Gas Volume vr	Dry Gas Meter Gas Volume vd	Standard Meter Temp. F° tr	Dry Gas Meter Inlet Temp. F° tdi	Dry Gas Meter Outlet Temp. F° tdo	Dry Gas Meter Avg. Temp. F° td	Time Min	Time Sec	Y	Chg (H)
Final												
Initial												
Difference	1	0.20										
Final												
Initial												
Difference	2	0.50										
Final												
Initial												
Difference	3	0.70										
Final												
Initial												
Difference	4	0.90										
Final												
Initial												
Difference	5	1.20										
Final												
Initial												
Difference	6	2.00										

Average _____

Stack Temperature Sensor Calibration

Meter Box # : *CM-1* *Name :* _____

Ambient Temperature : _____ *° F* *Date :* _____

Calibrator Model # : _____

Serial # : _____

Date Of Certification : _____

Primary Standards Directly Traceable National Institute of Standards and Technology (NIST)

Reference Source Temperature (° F)	***Test Thermometer Temperature (° F)***	***Temperature Difference %***
0		0.0
250		0.0
600		0.0
1200		0.0

$$\frac{(\text{Ref. Temp., }^{\circ}\text{F} + 460) - (\text{Test Therm. Temp., }^{\circ}\text{F} + 460)}{\text{Ref. Temp., }^{\circ}\text{F} + 460} * 100 <= 1.5\,\%$$

S TYPE PITOT TUBE INSPECTION FORM

Pitot Tube No: 1 Date: _____ Inspectors Name: _____

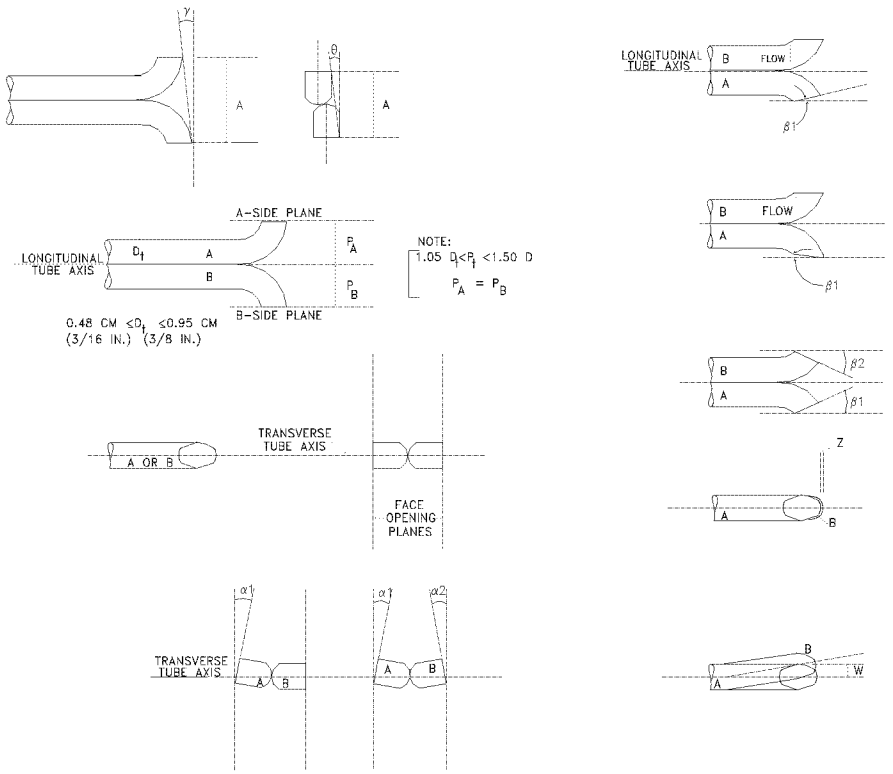

Pitot tube assembly level? x yes _____ no

Pitot tube openings damaged? _____ yes (explain below) x no

a_1 = 1 ° (<10°), a_2 = 1 ° (<10°) z = A sin g = 0.008 (in.); (<0.125 in.)

b_1 = 0 ° (<5°), b_2 = 2 ° (<5°) w = A sin q = 0.025 (in.); (<0.03125 in.)

γ = 0.5 °, θ = 1.5 °, A = 0.938 (in.) P_A = 0.477 (in.), P_B = 0.477 (in.), D_t = 0.375 (in.)

Calibration required? _____ yes x no

CALIBRATION SUMMARY

Project Number: _____ Date: _____
Client: _____ Operator: _____
Test Location: _____ Box Truck: _____

Analyzer Type, S/N, and Span	Cal Level	Cylinder ID Serial Number	Expected Cal Value	Actual Response	Difference As % of Span	Cylinder Pressure (psi)	Cylinder Expiration Date
CO_2	Zero						
	Mid						
	High						
O_2	Zero						
	Mid						
	High						

IMPINGER WEIGHT SHEET

PLANT:_____

UNIT NO:_____

LOCATION:_____

DATE:_____

TEST NO:_____

METHOD:_____

WEIGHED/MEASURED BY:_____

BALANCE ID:_____

	FINAL WEIGHT		INITIAL WEIGHT		IMPINGER		IMPINGER
Circle One:	MLS / GRAMS		MLS / GRAMS		GAIN		CONTENTS
IMPINGER 1							
IMPINGER 2							
IMPINGER 3							
IMPINGER 4							
IMPINGER 5							
IMPINGER 6							
IMPINGER 7							
IMPINGER 8							

IMPINGERS _____ _____ _____
FINAL TOTAL INITIAL TOTAL TOTAL IMPINGER GAIN

SILICA _____ _____ _____
FINAL TOTAL INITIAL TOTAL TOTAL SILICA GAIN

Isokinetic Sampling Cover Sheet

Test Engineer: _____

Test Technician: _____

Plant Information

Run Number: _____ Date: _____ Project Number: _____

Test Location: _____ Client Name: _____ Plant Name: _____

Duct Shape: Circular or Rectangular Length: _____ Width: _____ or Diameter: _____

Flue Area: _____ Upstream Diameters: _____ Downstream Diameters: _____

Port Type: _____ Port Length: _____ Port Diameter: _____

Test Method: _____ Source Condition: _____

Meter and Probe Data

Meter ID: _____ Meter Y Value: _____ ΔH Value: _____

Pitot ID: _____ Pitot Coefficient: _____ Train Type: _____

Nozzle ID # _____ Nozzle Diameter: _____ Filter Number/Weight: _____

Probe Length: _____ Probe Liner: _____ Thimble Number/Weight: _____

Pre-Test Nozzle Leak Check: _____ @ _____ "Hg Post-Test Nozzle Leak Check: _____ @ _____ "Hg

Pre-Test Pitot Leak Check: _____ "H_2O Post-Test Pitot Leak Check: _____ "H_2O

Traverse Data

Ports Sampled: _____ Points/Port: _____ Min/Point: _____

Total Points: _____ Total Test Time: _____ Sample Plane: Horizontal or Vertical

Stack Parameters

Barometric Pressure: _____ Static Pressure: _____

CO_2 %: _____/_____/_____/ Avg._____ O_2 %: _____/_____/_____/Avg._____ Determined by: Method 3 or Method 3A

Imp and/or silica balance Model and S/N: _____ Servomex Serial #: _____

Initial Imp. Volume or Weight: _____ Final Imp. Volume or Weight: _____ Imp. Volume or Weight Gain: _____

Initial Silica Weight: _____ Final Silica Weight: _____ Silica Weight Gain: _____

Comments:

Isokinetic Sampling Field Data Sheet

Project Number: _____ Date: _____ Test Number: _____

Client: _____ Test Location: _____ Operator: _____ Test Tech: _____

Plant: _____ Test Method: _____ Page Number: _____ of _____

Port-Point #.	Time	(ΔP)	Orifice Setting (ΔH)	Meter Volume (V_m) ft^3, Actual	Square Root, ΔP	Meter Rate, Cubic Feet/ Min.	Theoretical Meter Volume, (V_m) ft^3, per point	Theoretical Meter Volume, (V_m) ft^3, total	Stack Temp, °F	Meter Temp Inlet, °F	Meter Temp Outlet, °F	Pump Vacuum, " Hg	Probe Temp. °F	Filter Temp. °F	Impinger Outlet Well Temp. °F

This Page Left Blank

RK & Associates, Inc.

Emissions Test Report
RTO VOM Destruction Efficiency
GII, LLC
IEPA Site ID.: 031600BTB

GII, LLC
1909 NORTH CLIFTON AVENUE
CHICAGO, ILLINOIS 60614

JANUARY 2020

APPENDIX D

ADMINISTRATIVE CONSENT ORDER EPA-5-19-113(A)-IL-08

UNITED STATES ENVIRONMENTAL PROTECTION AGENCY
REGION 5
77 WEST JACKSON BOULEVARD
CHICAGO, IL 60604-3590

AUG 2 2 2019

REPLY TO THE ATTENTION OF

CERTIFIED MAIL
RETURN RECEIPT REQUESTED

Adam Labkon
General Iron Industries, Inc.
1909 N. Clifton Ave.
Chicago, Illinois 60614

Re: Administrative Consent Order EPA-5-19-113(a)-IL-08

Dear Mr. Labkon:

Enclosed is an executed original of the Administrative Consent Order regarding the above captioned case. If you have any questions about the Order, please contact me at (312) 886-3850.

Sincerely,

Nathan A. Frank, Chief
Air Enforcement and Compliance Assurance Section (IL/IN)

Enclosure

cc: Susan Tennenbaum/C-14J

Kent Mohr, Illinois Environmental Protection Agency

UNITED STATES ENVIRONMENTAL PROTECTION AGENCY
REGION 5

In the Matter of:	)	**EPA-5-19-113(a)-IL-08**
	)	
General Iron Industries, Inc.	)	**Proceeding Under Sections 113(a)(1) and**
Chicago, Illinois	)	**114(a)(1) of the Clean Air Act, 42 U.S.C.**
	)	**§§ 7413(a)(1) and 7414(a)(1)**
	)	

Administrative Consent Order

1. The Director of the Enforcement and Compliance Assurance Division, U.S. Environmental Protection Agency (EPA), Region 5, is issuing this Order to General Iron Industries, Inc. (General Iron) under Sections 113(a)(1) and 114(a)(1) of the Clean Air Act (CAA), 42 U.S.C. §§ 7413(a)(1) and 7414(a)(1).

Statutory and Regulatory Background

2. The Administrator of EPA may require any person who owns or operates an emission source who is subject to any requirement of the CAA to provide information required by the Administrator under Section 114(a)(1) of the CAA, 42 U.S.C. § 7414(a)(1). The Administrator has delegated this authority to the Director of the Enforcement and Compliance Assurance Division.

3. Title V of the CAA, 42 U.S.C. §§ 7661a-7661f, establishes an operating permit program for certain sources, including "major sources" and "major stationary sources."

4. Section 502(a) of the CAA, 42 U.S.C. § 7661a(a), and 40 C.F.R. § 70.7(b) provide that, after the effective date of any permit program approved or promulgated under Title V of the CAA, no source subject to Title V may operate except in compliance with a Title V permit.

5. 40 C.F.R. § 70.1(b) provides that all sources subject to the Part 70 regulations shall have a permit to operate that assures compliance by the source with all applicable requirements, as defined in 40 C.F.R. § 70.2

6. Section 503(c) of the CAA, 42 U.S.C. § 7661b(c), and 40 C.F.R. § 70.5(a) provide that any person required to have a permit under Title V must timely submit a complete application for a permit.

7. 40 C.F.R. § 70.5(a)(2) requires that, among other things, that a complete application include all emissions of regulated air pollutants and air pollutant emission rates.

8. U.S. EPA granted full approval to the Illinois Title V operating permit program (CAAPP) on December 4, 2001, set forth at 415 Illinois Compiled Statutes (ILCS) Section 5/39.5. The program became effective on November 30, 2001. 66 Fed. Reg. 62946.

9. Section 39.5(6)(b) of the Illinois Environmental Protection Act states that no person shall operate a CAAPP source without a CAAPP permit unless a CAAPP permit or renewal application has been timely submitted. 415 ILCS § 5/39.5(6)(b).

10. Sections 39.5(1.1)(a) and (b) of the Illinois Environmental Protection Act states that an owner or operator of a source may seek exclusion from the CAAPP prior to the date the CAAPP application for the source is due by submitting a permit application, consistent with the State permit program, requesting exclusion through the imposition of federally enforceable conditions limiting the potential to emit to below major source thresholds.

11. Section 502 of the CAA, 42 U.S.C. § 7661a, applies to all major stationary sources, defined at Section 501 of the CAA, 42 U.S.C. § 7602.

12. Section 39.5 of the Illinois Environmental Protection Act applies to any source defined as a major source or major stationary source. 415 ILCS § 5/39.5(2)(a)(ii).

13. The definition of "major stationary source" includes any stationary source located in a "marginal" or "moderate" ozone non-attainment area that emits or has the potential to emit 100 tons per year or more of volatile organic compounds. 415 ILCS § 5/39.5(2)(c)(iii).

14. Each state must submit to the Administrator of EPA a plan for attaining and maintaining the National Ambient Air Quality Standards under Section 110 of the CAA, 42 U.S.C. § 7410.

15. The Administrator of the EPA approved Illinois' plan for the attainment and maintenance of the NAAQS under Section 110 of the CAA (Illinois SIP). *See* 40 C.F.R. § 52.722 and 55 Fed. Reg. 40661 (October 4, 1990).

16. On September 9, 1994, EPA approved Part 211 of the IAC as part of the federally enforceable Illinois SIP. 59 Fed. Reg. 46567.

17. 35 IAC § 211.3690 defines "maximum theoretical emissions" as the quantity of volatile organic material emissions that theoretically could be emitted by a stationary source before add-on controls based on the design capacity or maximum production capacity of the source and 8760 hours per year.

18. 35 IAC § 211.4970 defines "potential to emit" as the maximum capacity of a stationary source to emit any air pollutant under its physical and operational design. Any physical or operational limitation on the capacity of a source to emit an air pollutant, including air pollution control equipment and restriction on hours of operation or on the type or amount of material combusted, stored, or processed, shall be treated as part of its design if the limitation is federally enforceable. *See also* 40 C.F.R. § 70.2; 415 ILCS § 5/39.5(1).

19. On March 12, 1997, EPA approved 35 IAC § 218.980, as part of the federally enforceable SIP. 62 Fed. Reg. 11327.

20. 35 IAC § 218.980(a)(1) states that a source is subject to 35 IAC Part 218, Subpart TT, if it contains process emission units not regulated by the Subparts identified in 35 IAC § 218.980(a)(1) which as a group have a maximum theoretical emissions of 100 tons or more per calendar year of volatile organic matter (VOM) and are not limited to less than 100 ton of VOM emissions per calendar year in the absence of air pollution control equipment through production or capacity limitations contained in a federally enforceable permit or SIP revision.

21. 35 IAC § 218.980(b)(1) states, in pertinent part, that a source is subject to 35 IAC Part 218, Subpart TT, if it has the potential to emit 25 tons or more of VOM per year, in aggregate, from emission units, that are not regulated by the Subparts identified in 35 IAC § 218.980(b)(1)(A) and not included in the categories listed in 35 IAC § 218.980(b)(1)(B).

22. On October 21, 1996, EPA approved 35 IAC §§ 218.986 and 218.987 as part of the federally enforceable SIP. 61 Fed. Reg. 54556.

23. 35 IAC § 218.986 states that every owner or operator of an emission unit subject to 35 IAC Part 218, Subpart TT shall comply with 35 IAC § 218.986(a).

24. 35 IAC § 218.986(a) requires every owner or operator to operate emission capture and control equipment which achieves an overall reduction in uncontrolled VOM emissions of at least 81 percent from each emission unit.

25. 35 IAC §§ 218.987 and 218.106(c) require every owner or operator of an emission unit which is subject to 35 IAC Part 218, Subpart TT to comply with the requirements of 35 IAC Part 218, Subpart TT, by March 15, 1995 or upon startup.

26. Under Section 113(a)(1) and (a)(3) of the CAA, 42 U.S.C. § 7413 (a)(1) and (a)(3), the Administrator of EPA may issue an order requiring compliance to any person who has violated or is violating a SIP and Title V of the CAA. The Administrator has delegated this authority to the Director of the Enforcement and Compliance Assurance Division.

Findings

27. General Iron owns and operates a metal shredding and recycling facility at 1909 North Clifton Ave, Chicago, Illinois (Facility), which is located in Cook County.

28. General Iron receives, processes, and recycles ferrous and non-ferrous scrap metals from cars and post-consumer scrap metal at the Facility.

29. Scrap metal is shredded in a hammermill shredder at the Facility that is equipped with a "Pedcon UHF High-Efficiency Roll Filter System" consisting of a capture hood, cyclone and roll-media filter system.

30. On or about June 13, 2017, May 24 and 25, 2018 and June 13, 2018, EPA conducted onsite inspections at the Facility, including inspections during emissions testing conducted by the Facility.

31. On or about November 11, 2017, EPA issued an Information Request pursuant to Section 114 of the CAA (2017 Information Request) to General Iron regarding the Facility. The 2017 Information Request, among other things, required General Iron to conduct emission testing of the hammermill shredder at the Facility and to provide the results of the emission testing to EPA. The required emissions testing included VOM, particulate matter (PM) and metals emissions rates.

32. On December 13, 2017 and May 21, 2018, General Iron met with EPA to discuss the 2017 Information Request.

33. General Iron conducted testing as required by the 2017 Information Request on May 24, 2018, and May 25, 2018, including testing for VOM, PM, and metals emissions, and on June 13, 2018 and June 14, 2018, including testing for PM and metals emissions.

34. On or about January 12, 2018 and June 25, 2018, General Iron submitted to EPA responses to the 2017 Information Request, including the results of emissions testing for VOM conducted on May 25, 2018 and emissions testing for PM and metals conducted on June 13 and 14, 2018, and an impact assessment for metals emissions.

35. On July 18, 2018, EPA issued General Iron a Notice and Finding of Violation (NOV/FOV) for violations of the Clean Air Act and the Illinois SIP.

36. General Iron provided to EPA the results of the emissions testing for PM and metals conducted on May 24, 2018 in submittals on July 23, 2018 and August 21, 2018.

37. General Iron submitted a written response to the NOV/FOV on August 23, 2018.

38. General Iron met with EPA to discuss the NOV/FOV on July 24, 2018 and September 14, 2018.

39. Based on the results of the emissions testing, the Facility is below the permitted hammermill shredder emission limits for PM and the Facility emits or has the potential to emit more than 100 tons per calendar year of volatile organic compounds.

40. General Iron is a "major stationary source" as defined at 42 U.S.C. § 7661(2) and 415 ILCS § 5/39.5(2)(c)(i).

41. By operating as a major source, General Iron is subject to the requirements of the CAA's Title V, 42 U.S.C. §§ 7661a-7661f, at the Facility.

42. Based on the December 12, 2017 response and the results of the emissions testing, the hammermill shredder at the Facility has maximum theoretical emissions rate of more than 100 tons per calendar year of VOM.

43. Based on the December 12, 2017 response and the results of the emissions testing, the hammermill shredder emits 25 tons or more of VOM per year.

44. To date, General Iron does not comply with the VOM control requirements of 35 IAC Part 218, Subpart TT, nor does it have in place a federally enforceable alternative control plan that qualifies for an exemption from these requirements.

45. By operating as a major stationary source without a Title V permit, General Iron has violated Section 502 of the CAA, the regulations at 40 C.F.R. §§ 70.1(b) and 70.7(b), and the Illinois Environmental Protection Act at 415 ILCS § 5/39.5(6)(b).

46. On July 16, 2019, General Iron completed installation of a regenerative thermal oxidizer (RTO) at the Facility.

Compliance Program

47. The RTO shall be appropriately designed, operated and maintained in a manner that ensures the minimum destruction efficiency of the RTO for VOM from the hammermill shredder is 98%.

48. Within 90 days of the effective date of this Order, General Iron must conduct a performance test to demonstrate the VOM destruction efficiency of the RTO.

49. At least 30 days prior to the date of the performance test, General Iron must submit to EPA for review and approval a proposed testing protocol describing the methods and procedures to be conducted during the test. General Iron shall conduct performance testing using, at a

minimum, EPA Methods 1 or 1A, 2 or 2A, 2B or 2C, 3, 4, and 25A, to demonstrate that the RTO achieves the required VOM destruction efficiency.

50. General Iron shall use the RTO operating data from a successful performance test to establish a set point temperature for the RTO that achieves the demonstrated VOM destruction efficiency of the RTO.

51. Within 60 days of the completion of the performance testing conducted according to the approved testing protocol, General Iron shall submit to EPA the results of the performance testing including:

    a. A summary of the results including inlet and outlet organic material concentrations, destruction efficiency of the RTO, visual observations of capture efficiency and RTO operating temperatures.

    b. A description of the facility operations at the time of the test, including operating parameters;

    c. A description of the sampling and analytical procedures; and

    d. All copies of data and measurements obtained during the testing.

52. Within 90 days of the completion of the performance testing, General Iron must submit a permit application to the Illinois EPA to incorporate the following conditions into a federally enforceable state operating permit (FESOP):

    a. Control Device: operate an RTO to control emissions from the hammermill shredder at the Facility;

    b. Operation requirements:

        i. Minimum combustion temperature must be maintained in the RTO, as determined by the performance test; and

ii. Minimum air flow or fan power must be maintained, as determined by the performance test;

c. Control equipment requirements: 98 percent or greater VOM destruction efficiency, by weight, of the RTO;

d. Emission limits: Annual VOM emission limits and RTO destruction efficiency requirements;

e. Monitoring requirements:

i. Continuous monitoring of temperature; and

ii. Continuous monitoring of air flow or fan power;

f. Recordkeeping requirements:

i. A log of the operating times for the shredder;

ii. A log of temperature and air flow or fan power operating records from continuous monitoring; and

iii. A log of any deviations from the operational limits for combustion temperature in the RTO.

53. General Iron must submit a copy of the FESOP permit application to EPA within 7 days of submitting the application to Illinois EPA.

54. General Iron must send all responses, deliverables, submittals or reports required by this Order to connolly.scott@epa.gov, and r5airenforcement@epa.gov. If electronic responses are not possible, send all documents to:

Attention: Compliance Tracker (AE-18J)
Air Enforcement and Compliance Assurance Branch
U.S. Environmental Protection Agency, Region 5
77 W. Jackson Boulevard
Chicago, Illinois 60604

General Provisions

55. This Order does not affect General Iron's responsibility to comply with other federal, state, and local laws.

56. This Order does not restrict EPA's authority to enforce the CAA and its implementing regulations.

57. Failure to comply with this Order may subject General Iron to penalties up to $99,681 per day for each violation under Section 113 of the CAA, 42 U.S.C. § 7413, and 40 C.F.R. Part 19.

58. The terms of this Order are binding on General Iron, its assignees and successors. General Iron must give notice of this Order to any successors in interest prior to transferring ownership and must simultaneously verify to EPA, at the above address, that it has given the notice.

59. General Iron may assert a claim of business confidentiality under 40 C.F.R. Part 2, Subpart B, for any portion of the information it submits to EPA. Information subject to a business confidentiality claim is available to the public only to the extent allowed by 40 C.F.R. Part 2, Subpart B. If General Iron fails to assert a business confidentiality claim, EPA may make all submitted information available, without further notice, to any member of the public who requests it. Emission data provided under Section 114 of the CAA, 42 U.S.C. § 7414, is not entitled to confidential treatment under 40 C.F.R. Part 2, Subpart B. "Emission data" is defined at 40 C.F.R. § 2.301.

60. This Order is not subject to the Paperwork Reduction Act, 44 U.S.C. § 3501 *et seq.*, because it seeks collection of information by an agency from specific individuals or entities as part of an administrative action or investigation. To aid in our electronic recordkeeping efforts,

please furnish an electronic copy on physical media such as compact disk, flash drive or other similar item. If it is not possible to submit the information electronically, submit the response to this Order without staples; paper clips and binder clips, however, are acceptable.

61. EPA may use any information submitted under this Order in an administrative, civil judicial, or criminal action.

62. General Iron agrees to the terms of this Order. General Iron waives any remedies, claims for relief, and otherwise available rights to judicial or administrative review that it may have with respect to any issue of fact or law set forth in this Order, including any right of judicial review under Section 307(b) of the CAA, 42 U.S.C. § 7607(b).

63. This Order is effective on the date of signature by the Director of the Enforcement and Compliance Assurance Division. This Order will terminate on the earlier of either two years from the effective date of the Order, provided that General Iron certifies that it has complied with all terms of the Order, or at the time General Iron certifies that it has complied with all terms of the Order and that it is no longer operating at the Facility.

General Iron Industries, Inc.

8/20/19
Date

Adam Labkon
Vice President
General Iron Industries, Inc.

United States Environmental Protection Agency

8/22/2019
Date

Michael D. Harris
Michael D. Harris
Acting Director
Enforcement and Compliance Assurance Division
U.S. Environmental Protection Agency, Region 5

CERTIFICATE OF MAILING

I certify that I sent the Administrative Consent Order, EPA-5-19-113(a)-IL-08, by certified mail, return receipt requested, to:

Adam Labkon
General Iron Industries, Inc.
1909 N. Clifton Ave.
Chicago, Illinois 60614

I also certify that I sent a copy of the Administrative Consent Order, EPA-5-19-113(a)-IL-08, by E- mail to:

Kent Mohr, Manager
Compliance Section
Bureau of Air
Illinois Environmental Protection Agency
Kent.Mohr@Illinois.gov

On the 22nd day of August 2019

Kathy Jones

Kathy Jones
Program Technician
AECAB, PAS

CERTIFIED MAIL RECEIPT NUMBER: 7019 0140 0000 6722 3680

This Page Left Blank