Executive Director
Thomas W. Sigmund, P.E.
Commissioners
Kathryn Hasselblad, President
James Blumreich, Secretary
Thomas P. Meinz, Vice President
Mark D. Tumpach, Vice President
Lee D. Hoffmann, Vice President

NEW Water
The brand of the Green Bay Metropolitan Sewerage District

January 23, 2020

Ms. Tania Taff
Air Management Engineer – Division of Environmental Management
Wisconsin Department of Natural Resources
2984 Shawano Ave
Green Bay, WI 54313-6727

RE: Testing for emissions of mercury from I08 without use of granulated activated carbon

Dear Ms. Taff:

The purpose of this letter is to submit and discuss results for emissions testing that Green Bay Metropolitan Sewerage District (GBMSD) has opted to conduct on Process I08, the fluid bed incinerator.

Background

In 2018, GBMSD began operation of a new fluid bed incinerator (FBI) that is subject to 40 CFR 60, Subpart LLLL, Standards of Performance for New Sewage Sludge Incineration Units, which include limits for mercury emissions. GBMSD installed a granulated activated carbon (GAC) unit to control mercury emissions, if needed, to meet the new limits. Compliance emissions testing in October 2018 and May 2019 demonstrated that mercury emissions have been within the limits while operating the GAC.

A malfunction that occurred on November 7, 2019, described in a written report to the United States Environmental Protection Agency (US EPA) dated December 31, 2019, left the GAC inoperable. GBMSD implemented numerous alternative options for managing sludge, but after several weeks, determined that the ability to treat wastewater effectively would be compromised without incinerating some sewage sludge. As such, limited incineration of sewage sludge without the GAC began on November 21, 2019.

Green Bay Metropolitan Sewerage District
2231 North Quincy Street | Green Bay, WI 54302 | Phone (920) 432-4893 | Fax (920) 432-4302 | www.newwater.us

To measure the mercury emission rate and evaluate the potential impacts of operating without the GAC, GBMSD conduct an emission test on December 12, 2019. All other emission control systems, (the combustion chamber temperature, a wet electrostatic precipitator, and scrubber) operate in accordance with their respective allowable operating parameters whenever the FBI is operated, including during the emission test. The enclosed report contains the results from that testing, which was conducted by Advanced Industrial Resources, Inc. Results show that the allowable mercury concentration exceeded the Subpart LLLL limit for new fluid bed incinerators while incinerating sewage sludge without operating the GAC.

While operating the FBI without the GAC might exceed the allowable mercury concentration, it does not pose a significant risk to the public. An air dispersion modeling evaluation was conducted by using the measured mercury emission rate without the GAC and comparing the results with health-based standards. The evaluation demonstrates that the impacts from the emission rate are well within state health-based standards. This evaluation is discussed in detail below.

Discussion

GBMSD conducted an emission test on December 12, 2019 to determine the mercury emission rate from the FBI without the GAC operating. The sludge feed rate during the test averaged 1.81 dry tons per hour, which is 85% of the 51 dry tons per 24-hour day capacity.

The measured mercury emission concentration from the December 12, 2019 test was 0.0220 milligrams per cubic meter (mg/m^3) corrected to 7% oxygen. While this emission concentration exceeds the Subpart LLLL emission limit, it meets several other standards, including the Subpart LLLL limit for new multiple hearth sewage sludge incinerators, as well as existing fluid bed and multiple hearth sewage sludge incinerators (see 40 CFR 60 Subpart MMMM). The measured mercury emission rate was 0.000646 pounds per hour (lb/hr), which meets the National Emission Standard for Mercury (see 40 CFR 61 Subpart E). This emission rate also meets Wisconsin's air toxics emissions standards for mercury (see Wis. Admin. Code§ NR 445, Table A). Table 1 compares the measured concentration and emission rate without the GAC in operation with each of these federal and state standards.

Table 1 Comparison of Mercury Emission Rate without GAC with Federal and State Standards

Regulation	Numeric Standard	Equivalent Hourly Standard	GBMSD FBI without GAC[1]	Meets Standard, Percent
Federal Standards				
Subpart LLLL New Fluid Bed Incinerator	0.0010 mg/m^3 @ 7% O_2		0.0220 mg/m^3 @ 7% O_2	Exceeds Standard
Subpart LLLL New Multiple Hearth Incinerator	0.15 mg/m^3 @ 7% O_2		0.0220 mg/m^3 @ 7% O_2	15 %
Subpart MMMM Existing Fluid Bed Incinerator	0.037 mg/m^3 @ 7% O_2		0.0220 mg/m^3 @ 7% O_2	59 %
Subpart MMMM Existing Multiple Hearth Incinerator	0.28 mg/m^3 @ 7% O_2		0.0220 mg/m^3 @ 7% O_2	8 %
40 CFR 61 Subpart E Sludge Incineration Plants	7.1 lb/24-hr	0.30 lb/hr	0.000646 lb/hr	0.2 %
Wisconsin State Standards				
NR 446.20(2) Sludge Incineration Plants	7.1 lb/24-hr	0.30 lb/hr	0.000646 lb/hr	0.2 %
NR 445 Table A Mercury, Inorganic Stack Ht > 75 ft	1,838 lb/yr	0.21 lb/hr	0.000646 lb/hr	0.3 %
NR 445 Table A Mercury, Inorganic Stack Ht > 75 ft	0.0405 lb/hr		0.000646 lb/hr	2 %

To estimate potential impacts on human health from operating the FBI without the GAC, GBMSD contracted with Short Elliot Hendrickson Inc. to conduct air dispersion modeling to calculate potential off-site mercury concentrations and to compare those potential impacts with state health-based standards. The ambient air quality standards for mercury are shown in the Wisconsin Administrative Code, NR 445, Table A.

These standards are a 24-hour average[2] concentration of 0.6 micrograms per cubic meter (µg/m^3) and an annual[3] average concentration of 0.3 µg/m^3. The air dispersion modeling was conducted in accordance with Wisconsin Air Dispersion Modeling Guidelines and the federal Guideline on Air Quality Models (40 CFR 51 Appendix W). A memorandum documenting the air dispersion modeling completed is enclosed.

For evaluation of the 24-hour standard, the actual days the FBI has run without the GAC and is anticipated to run without the GAC (November 21, 2019 through January 31, 2020) were modeled using the 0.000646 lb/hr mercury emission rate. The resulting highest impact, 0.00187 µg/m^3 is about 0.3 % of the 24-hour standard.

---

[1] The emission rate and emission concentration shown on this table are based on emission testing conducted at the GBMSD facility on December 12, 2019 without the operation of the GAC.
[2] Wisconsin's 24-hour standard is 2.4% of the mercury TLV the American Conference of Governmental Industrial Hygienists.
[3] Reference Concentration for Inhalation Exposure for mercury from EPA Integrated Risk Information System.

For the annual standard analysis, the FBI was modeled as "off" for the shutdown period (October 19, 2019 through November 20, 2019), "on" at 0.000646 lb/hr during the actual days when the FBI operated or is anticipated to operate without the GAC (intermittently from November 21, 2019 through January 31, 2020), and then "on" at the permitted mercury concentration rate for the remainder of the 365 day period (February 1 through October 18, 2020). The resulting impact, 0.00004 µg/m^3 is about 0.01% of the annual standard.

Table 2 – Modeling Results Compared with Ambient Air Standards for Mercury

Averaging Period	Modeled Concentration (µg/m^3)	Ambient Standard (µg/m^3)	*% of Standard*
24-hr	0.00187	*0.6*	*0.3%*
Annual	0.00004	*0.3*	*0.01%*

While operating the FBI without the GAC might exceed the allowable mercury concentration, modeling indicates that it does not pose a significant risk to the public. The air dispersion modeling evaluation demonstrates that the impacts from the emission rate are well within state health-based standards.

Please feel free to contact Julie Maas by phone at (920) 438-1045 or email at jmaas@newwater.us with any questions or comments you may have.

Sincerely,

GREEN BAY METROPOLITAN SEWERAGE DISTRICT

Thomas W Sigmund

Thomas W. Sigmund, P.E.
Executive Director

c. Louise Gross, US EPA
Daniel Schaufelberger, US EPA
James Bonar-Bridges, WDNR
Thomas Henning, SEH

Enclosures:
1: Advanced Industrial Resources Sewage Sludge Incineration Unit Emission Test Report – Test Date December 12, 2019
2: SEH Technical Memorandum – Analysis of impact of Mercury Emissions from FBI

ADVANCED INDUSTRIAL RESOURCES, INC.

SEWAGE SLUDGE INCINERATION UNIT EMISSION TEST REPORT FLUIDIZED BED INCINERATOR (FBI) PROCESS I08 – STACK S08 AT GREEN BAY METROPOLITAN SEWERAGE DISTRICT TREATMENT PLANT PROJECT ID: KR-10375

PREPARED FOR:

GREEN BAY METROPOLITAN SEWERAGE DISTRICT
2231 NORTH QUINCY STREET
GREEN BAY, WISCONSIN 54302

PREPARED BY:

ADVANCED INDUSTRIAL RESOURCES, INC.
3407 NOVIS POINTE
ACWORTH, GEORGIA 30101

TEST DATE:
DECEMBER 12, 2019

REPORT CERTIFICATION SHEET

Having conducted the Technical Review of this report, I hereby certify the data, information, results, and calculations in this report to be accurate and true according to the methods and procedures used.

January 15, 2020

Derek Stephens
Technical Director
Advanced Industrial Resources

Date

Having written and prepared this report, I hereby certify that the data, information and results in this report to be correct and all inclusive of the necessary information required for a complete third-party review of the testing event.

January 15, 2020

Steven Haigh
Report Preparation Director
Advanced Industrial Resources

Date

Having supervised all aspects of the field testing, I hereby certify the equipment preparation, field sample collection procedures, and all equipment calibrations were conducted in accordance to the applicable methodologies.

January 15, 2020

Greg Essig
Field Project Supervisor
Advanced Industrial Resources

Date

TABLE OF CONTENTS

1.0	INTRODUCTION	1
1.1	SUMMARY OF TEST PROGRAM	1
1.2	KEY PERSONNEL	1
2.0	PROCESS AND SAMPLING LOCATION DESCRIPTIONS	3
2.1	PROCESS DESCRIPTION	3
2.2	SAMPLING LOCATION DESCRIPTION	3
3.0	SUMMARY AND DISCUSSION OF TEST RESULTS	4
3.1	OBJECTIVES AND TEST MATRIX	4
3.2	FIELD TEST CHANGES, PROBLEMS, & ITEMS OF NOTE	4
3.3	PRESENTATION OF TEST RESULTS	5
3.4	PROCESS MONITORING	5
4.0	SAMPLING AND ANALYTICAL PROCEDURES	7
5.0	QUALITY ASSURANCE ACTIVITIES	8
5.1	PROBE NOZZLE DIAMETER CHECKS	8
5.2	PITOT TUBE FACE PLANE ALIGNMENT CHECK	8
5.3	METERING SYSTEM CALIBRATION	8
5.4	TEMPERATURE GAUGE CALIBRATION	9
5.5	DATA REDUCTION CHECKS	9
5.6	EXTERNAL QUALITY ASSURANCE	9
5.6.1	TEST PROTOCOL EVALUATION	9
5.6.2	ON-SITE TEST EVALUATION	9
6.0	DATA QUALITY OBJECTIVES	10

APPENDICES

APPENDIX A: TEST RESULTS

APPENDIX B: FIELD DATA REDUCTION

APPENDIX C: EXAMPLE CALCULATIONS AND NOMENCLATURE

APPENDIX D: FIELD DATA (SEE ATTACHED CD FOR COMPLETE MONITOR DATA)

APPENDIX E: LAB REPORTS

APPENDIX F: CALIBRATION DATA

APPENDIX G: PROCESS OPERATION DATA

1.0 INTRODUCTION

1.1 SUMMARY OF TEST PROGRAM

The Green Bay Metropolitan Sewerage District (GBMSD) operates the existing wastewater treatment plant located at 2231 North Quincy Street, Green Bay, Wisconsin. The facility operates a fluidized bed incinerator (FBI) to treat biosolids generated at the plant. The FBI is listed in the facility's air permit as Process I08 which vents to atmosphere via Stack S08. GBMSD operations are regulated under Wisconsin Department of Natural Resources (WDNR) Air Pollution Control Operation Permit No. 405004600-P30 and Construction Permit No. 14-JJW-051-R1. Those permits contain emission limits for mercury of 7.1 pounds per 24 hour period (0.296 lb/hr) and 0.0010 milligrams per dry standard cubic meter.

GBMSD proposed to conduct emission testing for mercury without the operation of a granular activated carbon system (GAC). The GAC was installed to control the emissions of mercury from GBMSD's FBI. In a letter dated August 1, 2018, the United States Environmental Protection Agency (US EPA) approved a request from GBMSD to operate the GAC only if needed to meet emission limits for mercury. If emissions of mercury from the FBI meet the compliance limits without the GAC, GBMSD has the option to combust sewage sludge without operating the GAC.

The purpose of this testing effort is to evaluate emissions of mercury from the FBI without use of the GAC. Testing was performed to measure mercury emissions. The GAC was not operated during testing. All other air pollution control units were operated during testing and their operating parameters were monitored and recorded.

Testing was conducted on December 12, 2019, in accordance with a Wisconsin DNR approved Site-Specific Test Protocol (SSTP). All testing was conducted by Advanced Industrial Resources, Inc. (*AIR*) in accordance with approved USEPA Methods (i.e., 40 CFR 60 Appendix A, Methods 1, 2, 3, 3A and 29).

1.2 KEY PERSONNEL

The key personnel who coordinated the test program and their telephone numbers are:

Julie Maas, *Green Bay MSD* 920-438-1045

Bruce Bartel, *Green Bay MSD*	920-438-1006
Thomas Henning, *Short Elliot Hendrickson Inc.*	920-287-0677
Derek Stephens, *Advanced Industrial Resources*	404-843-2100
Scott Wilson, *Advanced Industrial Resources*	800-224-5007
Ross Winne, *Advanced Industrial Resources*	404-843-2100
Steve Haigh, *Advanced Industrial Resources*	404-843-2100

2.0 PROCESS AND SAMPLING LOCATION DESCRIPTIONS

2.1 PROCESS DESCRIPTION

The Green Bay Metropolitan Sewerage District (GBMSD) operates wastewater treatment plants in Green Bay and De Pere, Wisconsin. GBMSD implemented the Resource Recovery and Electrical Energy Project (R2E2) to replace its solid handling facility and meet the increased capacity of sludge from the De Pere Facility along with meeting the Subpart LLLL SSI standards. The facility receives and treats wastewater by screening, grit removal, primary clarification, and activated sludge treatment with biological phosphorus removal. The solids at the De Pere Facility are pumped to the Green Bay Facility where they are dewatered and incinerated, the resulting ash of which is landfilled.

The Fluidized Bed Incinerator (FBI) receives anaerobically digested, polymer conditioned, and centrifuge dewatered biosolids. The FBI system includes a biosolids dryer, incinerator feed pumps, a fluidized bed reactor, a hot thermal oil heat exchanger, a wet scrubber, a wet electrostatic precipitator, an exhaust gas conditioner and re- heater, a static bed carbon adsorber, blowers, fans, exhaust flues, and ducting. The FBI has a design sludge feed rate of 51 dry tons per day.

The operation of the FBI and the associated control equipment is monitored using flow monitors, combustion temperature, power inputs, scrubber liquid pH, effluent water flow rate, and pressure differential monitors for determining the pressure drop of gas flow across the scrubber. The exhaust of the FBI is also equipped with oxygen (wet and dry) and carbon monoxide continuous emissions monitoring systems (CEMS).

2.2 SAMPLING LOCATION DESCRIPTION

The exhaust Stack S08 of the FBI has a circular cross section with an internal diameter of 23.625 inches. The sampling locations are located at 15.2 equivalent diameters downstream from the nearest upstream flow disturbance and at 34.5 equivalent diameters upstream from the nearest downstream flow disturbance or stack exhaust. The stack has at least two sampling ports oriented 90 degrees to one another in a plane perpendicular to the flow direction. Twelve sampling points (six points per port) were used for USEPA Methods 2, 3, 4 and 29 sampling, in accordance with USEPA Method 1 requirements.

3.0 SUMMARY AND DISCUSSION OF TEST RESULTS

3.1 OBJECTIVES

The purpose of this testing effort is to evaluate emissions of mercury from the FBI without use of the GAC. Testing was performed to measure mercury emissions. The GAC was not operated during testing. All other air pollution control units were operated during testing and their operating parameters were monitored and recorded.

3.2 FIELD TEST CHANGES, PROBLEMS, & ITEMS OF NOTE

The testing was conducted in accordance with the associated Site-Specific Test Protocol submitted to Wisconsin DNR prior to testing and no problems were encountered during testing that required deviation from the planned test protocol.

Items of Note:

Upon receipt of the sample shipping cooler at the analytical laboratory, it was noted by laboratory personnel that each of the respective runs' Sample container 5B's had lost liquid sample contents. Based upon the sample level markings placed on each of the respective sample containers prior to shipping and the method specified volumes of sample rinses, it is estimated that the volumes lost ranged from 40-90 mL.

As suggested in the Note listed after Method 29, Section 8.2.9.2, a pressure relief hole was used in the Container 5B cap to prevent excessive pressure build-up of the contents resulting from the potential reaction of potassium permanganate ($KMnO_4$) with acid (0.1 N H_2SO_4).

The samples were shipped from the field to the contract laboratory via private courier (UPS). During shipment, the sample shipping cooler was apparently handled roughly. Therefore, while the sample bottles were sufficiently protected from breakage using packing materials (bubble wrap, etc.), the jostling of the container resulted in liquid sample being extricated from the respective Container 5B sample cap holes.

While the lab was able to estimate the quantities lost, they were not able to definitively determine the lost volumes. Therefore, the lab analyzed the samples 'as is' after diluting

the samples to 500 mL, as per normal sample analysis protocol. The analysis conducted is on a concentration basis whereby at least two (2) representative aliquots of the respective sample containers' contents are analyzed. The resulting concentrations (ug/mL) are then extrapolated to a total mass collected (ug) using the total volume (mL) of the sample from which the aliquot(s) were analyzed ($ug_{Sample} = ug/mL_{Aliquot} \times mL_{Total\ Volume}$). Therefore, while it is possible that some mercury was lost along with the liquid sample loss, the overall concentration of the sample containers' contents were likely unaffected. Additionally, because the samples were each diluted up to 500 mL prior to analysis, per normal protocol, the final calculated mass (ug) reported was likely unaffected and thus the emissions reported based upon the analytical results should be considered representative of the actual source emissions.

3.3 PRESENTATION OF TEST RESULTS

Emission test results are presented in Appendix A and are summarized in Table 3-1. Reduced and tabulated data from the field-testing is included in Appendix B. The calculations and nomenclature used to reduce the data are presented in Appendix C. Actual raw field data sheets are presented in Appendix D. Laboratory reports and custody records are presented in Appendix E. Equipment calibration information and Gas Calibration Certification sheets are presented in Appendix F. Facility process data, as provided, is included in Appendix G.

TABLE 3-1: Results Summary

Source	Pollutant	Average Measured	Allowable	Units	% of Allowable	Regulatory basis
FBI Stack 08	**Mercury** (Hg)	0.0220	0.0010	mg/dscm @ 7%O_2	**2201%**	**40 CFR 60, Subpart LLLL**
		0.0155	7.1	lb/24-hour	**0.2%**	**40 CFR 61, Subpart E**

* Measured hourly emission rate is 0.000646 lb/hour.

3.4 PROCESS MONITORING

All essential process monitoring equipment was operating properly and recording data throughout the test period.

Facility personnel collected sludge samples for applicable analysis within the GBMSD laboratory for determinations of sludge throughput processing rates. Analytical results and sludge feed rates are presented in Appendix G.

4.0 SAMPLING AND ANALYTICAL PROCEDURES

Testing was conducted according to the methodology in the *Title 40 Code of Federal Regulation*, Part 60, Appendix A as applicable. The following methods were employed for emission sampling and analyses:

- EPA Method 1 was used for the qualification of the location of sampling ports and for the determination of the number and positions of stack traverse points, as applicable to sample traverses for Method 2.

- EPA Method 2 was employed for the determination of the stack gas velocity and volumetric flow rate during stack sampling using the Type "S" Pitot tube.

- EPA Methods 3 and 3A were used for the calculation of the density and dry molecular weight of the effluent stack gas. An instrumental analyzer was used for the determination of molecular oxygen and carbon dioxide concentrations.

- EPA Method 4 was used for the determination of moisture content.

- EPA Method 29 was used for the determination of mercury emissions.

Emission and process samples, as applicable, were recovered on site in a controlled environment and stored in appropriate storage containers. The liquid level was marked to provide an indication of the loss of liquid sample during transport. Filters were placed and sealed in a Petri dish. All applicable samples were stored upright in closed sample boxes until final laboratory analysis. In order to limit the chain of custody, only essential *AIR* personnel are permitted access to these samples.

5.0 QUALITY ASSURANCE ACTIVITIES

The quality assurance/quality control (QA/QC) measures associated with the sampling and analysis procedures given in the noted EPA reference methodologies, in Subparts A of 40 *CFR* 60 and 40 *CFR 63*, and in the *EPA QA/QC Handbook*, Volume III (EPA 600/R-94/038c) were employed, as applicable. Such measures included, but were not limited to, the procedures detailed below.

5.1 PROBE NOZZLE DIAMETER CHECKS

Probe nozzles were calibrated before field testing by measuring the internal diameter of the nozzle entrance orifice along three different diameters. Each diameter was measured to the nearest 0.001 inch, and all measurements were averaged. The diameters were within the limit of acceptable variation of 0.004".

5.2 PITOT TUBE FACE PLANE ALIGNMENT CHECK

Before field testing, each Type S Pitot tube was examined in order to verify that the face planes of the tube were properly aligned, per Method 2 of 40 *CFR* 60, Appendix A. The external tubing diameter and base-to-face plane distances were measured in order to verify the use of 0.84 as the baseline (isolated) Pitot coefficient. At that time the entire probe assembly (i.e., the sampling probe, nozzle, thermocouple, and Pitot tube) was inspected in order to verify that its components met the interference-free alignment specifications given in EPA Method 2. Because the specifications were met, then the baseline Pitot coefficient was used for the entire probe assembly.

After field testing, the face plane alignment of each Pitot tube was checked. No damage to the tube orifices was noted.

5.3 METERING SYSTEM CALIBRATION

Every three months each dry gas meter (DGM) console is calibrated at five orifice settings according to Method 5 of 40 *CFR* 60, Appendix A. From the calibration data, calculations of the values of Y_m and $\Delta H_@$ are made, and an average of each set of values is obtained. The limit of total variation of Y_m values is ± 0.02, and the limit for $DH_@$ values is ± 0.20.

After field testing, the calibration of the DGM console was checked by performing three calibration runs at a single intermediate orifice setting that is representative of the range used during field-testing. Each DGM was within the limit of acceptable relative variation from Y_m of 5.0%.

5.4 TEMPERATURE GAUGE CALIBRATION

After field testing, the temperature measuring instruments on each sampling train was calibrated against standardized mercury-in-glass reference thermometers. Each indicated temperature was within the limit of acceptable variation between the absolute reference temperature and the absolute indicated temperature of 1.5%.

5.5 DATA REDUCTION CHECKS

AIR ran an independent check (using a validated computer program) of the calculations with predetermined data before the field test, and the *AIR* Team Leader conducted spot checks on-site to assure that data was being recorded accurately. After the test, *AIR* checked the data input to assure that the raw data had been transferred to the computer accurately.

5.6 EXTERNAL QUALITY ASSURANCE

5.6.1 TEST PROTOCOL EVALUATION

A Site-Specific Test Protocol was submitted to the Wisconsin DNR in advance of testing, which provided regulatory personnel the opportunity to review and comment upon the test and quality assurance procedures used in conducting this testing.

5.6.2 ON-SITE TEST EVALUATION

A test schedule was submitted with the Site-Specific Test Protocol. No tests were performed earlier than stated in the original schedule. Therefore, regulatory personnel were afforded the opportunity for on-site evaluation of all test procedures. Mr. Andrew Seeber of Wisconsin Department of Natural Resources observed testing.

6.0 DATA QUALITY OBJECTIVES

The data quality objectives (DQOs) process is generally a seven-step iterative planning approach to ensure development of sampling designs for data collection activities that support decision making. The seven steps are as follows: (1) defining the problem; (2) stating decisions and alternative actions; (3) identifying inputs into the decision; (4) defining the study boundaries; (5) defining statistical parameters, specifying action levels, and developing action logic; (6) specifying acceptable error limits; and (7) selecting resource-effective sampling and analysis plan to meet the performance criteria. The first five steps are primarily focused on identifying qualitative criteria such as the type of data needed and defining how the data will be used. The sixth step defines quantitative criteria and the seventh step is used to develop a data collection design. In regards to emissions sampling, these steps have already been identified for typical monitoring parameters.

Monitoring methods presented in 40 *CFR* 60 indicate the following regarding DQOs: Adherence to the requirements of this method will enhance the quality of the data obtained from air pollutant sampling methods. At a minimum, each method provides the following types of information: summary of method; equipment and supplies; reagents and standards; sample collection, preservation, storage, and transportation; quality control; calibration and standardization; analytical procedures, data analysis and calculations; and alternative procedures. These test methods have been designed and tested according to DQOs for emissions testing and analysis.

APPENDIX A

TEST RESULTS

Advanced Industrial Resources, Inc.

Test Results

Green Bay MSD
Green Bay, WI
FBI Stack S08

Notes:

1) tpy-tons per year assumes continuous operation or 8,760 hours per year.

2) Permit FOP No. 405004600-P30 Emission limits

3) 40 CFR 60 LLLL New SSI Emission limits - Table 1

* "Less than' symbol (<) indicates analyte of interest below the analytical detection limit; values reported based upon lab's detection limit

		Units	Run 1	Run 2	Run 3	Averages
Test Date			12-Dec-19	12-Dec-19	12-Dec-19	
Start Time			7:00	10:25	13:50	
End Time			10:03	13:29	16:54	
P_m	Pressure of meter gases	inches Hg	29.79	29.79	29.79	29.79
P_s	Pressure of stack gases	inches Hg	29.65	29.65	29.65	29.65
$V_{m(std)}$	Volume of gas sample	dscf	109.58	106.00	110.83	108.81
$V_{w(std)}$	Volume of water vapor	scf	2.17	2.27	2.41	2.28
B_{ws}	Moisture in stack gas	dimensionless	0.019	0.021	0.021	0.021
$B_{ws,theo}$	Theoretical max. moisture		0.093	0.096	0.097	0.095
$B_{ws,act}$	Actual moisture		0.019	0.021	0.021	0.021
M_d	Mol. Wt. Of gas at DGM	lb./lb.-mole	30.06	30.05	29.99	30.03
M_s	Mol. Wt. Of gas at stack	lb./lb.-mole	29.82	29.80	29.74	29.79
v_s	Velocity of stack gas	ft./sec	51.38	50.83	51.62	51.28
A_n	Area of nozzle	ft^2	0.000218	0.000218	0.000218	0.000218
A_s	Area of stack	ft^2	3.04	3.04	3.04	3.04
Gas Stream Flow Rates						
Q_a	Vol. Flow rate of actual gas	cfm	9,385	9,284	9,429	9,366
Q_{sd}	Vol. Flow rate of dry gas	dscfm	8,417	8,298	8,421	8,379
I	Isokinetic sampling ratio	percent	100.9	99.0	102.0	100.7
Gas Stream Mercury Concentrations						
c_{Hg}	Conc. Of Hg in dry stack gas	mg/dscm	0.0189	0.0208	0.0221	0.0206
c'_{Hg}	Hg Conc. Corr. to 7% O_2	mg/dscm @ 7%O_2	0.0195	0.0219	0.0246	**0.0220**
$c'_{Hg, All}$	Allow. Hg Conc. [3]	mg/dscm @ 7%O_2	0.0010	0.0010	0.0010	**0.0010**
% of Al	% of Allowable	%	1953%	2194%	2456%	**2201%**
c_{Hg}	Conc. Of Hg in dry stack gas	10^{-6} gr/dscf	8.23	9.06	9.66	8.99
Mercury Mass Rates						
E_{Hg}	Emission rate of Hg	lb/hour	0.000594	0.000645	0.000697	0.000646
		lb/24-hour	0.0143	0.0155	0.0167	0.0155
E_{Hg} All	Allowable Hg Em. Rate	lb/24-hour[2]	7.1	7.1	7.1	7.1
% of Al	% of Allowable	%	0.2%	0.2%	0.2%	**0.2%**
E_{Hg}	Emission rate of Hg	tpy[1]	2.6E-03	2.8E-03	3.1E-03	2.8E-03

APPENDIX B

FIELD DATA REDUCTION

Advanced Industrial Resources, Inc.

Data Reduction Sheet

Client:	Green Bay MSD	**Console ID:**	C-10
Location:	Green Bay, WI	**Y_m:**	0.985
Source:	FBI Stack S08	**$\Delta H_@$:**	1.825
Test Team:	SS, JG, GE	**C_p:**	0.84
EPA Methods:	1, 2, 3A, 4 & 29	**Analyte(s):**	Hg

		Units	Run 1	Run 2	Run 3
Test Date			12-Dec-19	12-Dec-19	12-Dec-19
Start Time			7:00	10:25	13:50
End Time			10:03	13:29	16:54
V_m	Volume of gas sample	dcf	114.390	111.513	116.475
M_{lc}	Mass of liquid collected	g	45.9	47.9	50.9
Δp	Velocity head of stack gas	inches H_2O	0.792	0.773	0.795
$(\Delta p)^{1/2}$	Square root of velocity head	(inches $H_2O)^{1/2}$	0.890	0.879	0.891
ΔH	Pressure differential	inches H_2O	1.27	1.24	1.27
θ	Total sampling time	minutes	180.0	180.0	180.0
D_n	Diameter of nozzle	inches	0.200	0.200	0.200
D_s	Diameter of stack	inches	23.625	23.625	23.625
T_m	Temperature of meter	°R	541	545	544
T_s	Temperature of stack gas	°R	572	573	573
P_{bar}	Barometric pressure	inches Hg	29.70	29.70	29.70
p_g	Gauge pressure of stack gas	inches H_2O	-0.70	-0.70	-0.70
% O_2	Percent O2 by volume	percent ($^v/_v$)	7.480	7.749	8.386
% CO_2	Percent CO2 by volume	percent ($^v/_v$)	10.998	10.865	10.352
% N_2	Percent N2 by volume	percent ($^v/_v$)	81.5	81.4	81.3
m_{Hg}	Mass of mercury	mg	0.0585	0.0623	0.0694

APPENDIX C

EXAMPLE CALCULATIONS & NOMENCLATURE

Advanced Industrial Resources, Inc.
Sample Calculation Sheet (Hg)

Green Bay MSD, Green Bay, WI
FBI Stack S08, Run #1

Area of nozzle:

$A_n = 3.1415 \times D_n^2 / 4 / 144 \text{ in}^2/\text{ft}^2$

$A_n = 3.1415 \times (0.2) \times (0.2) / 4 / 144$

$A_n =$ 0.000218 ft^2

Area of stack:

$A_s = 3.1415 \times Ds^2 / 4 / 144 \text{ in}^2/\text{ft}^2$

$A_s = 3.1415 \times (23.5) \times (23.5) / 4 / 144$

$A_s =$ 3.05 ft^2

Absolute pressure of meter gases:

$P_m = P_{bar} + \varnothing H / 13.6$

$P_m = 29.7 + 1.267 / 13.6$

$P_m =$ 29.79 inches Hg

Absolute pressure of stack gases:

$P_s = P_{bar} + p_g / 13.6$

$P_s = 29.7 + -0.7 / 13.6$

$P_s =$ 29.65 inches Hg

Volume of gas sample, standardized:

$V_{m(std)} = V_m \times Y_m (T_{std} / T_m) (P_m / P_{std})$

$V_{m(std)} = (114.39) \times (0.985) \times (528/541) \times (29.79/29.92)$

$V_{m(std)} =$ 109.49 dscf

Volume of water vapor in the gas sample, standardized:

$V_{w(std)} = (V_{lc} \times p_w \times R \times T_{std}) / (M_w \times P_{std})$

$V_{w(std)} = (46) \times (0.002201) \times (21.85) \times (528) / (18 \times 29.92)$

$V_{w(std)} =$ 2.17 scf

Volume proportion of water in the stack gas stream:

$B_{ws} = V_{w(std)} / (V_{m(std)} + V_{w(std)})$

$B_{ws} = (2.17 / (109.49 + 2.17))$

$B_{ws} =$ 0.0194

Nitrogen content of gas at the DGM:

$\%N_2 = 100\% - \%CO_2 - \%O_2 - \%CO$

$\%N_2 = 100\% - 11\% - 7.48\% - 0\%$

$\%N_2 =$ 81.5 %

*Note: Values may not agree exactly with results shown elsewhere in this report due strictly to rounding

Advanced Industrial Resources, Inc.
Sample Calculation Sheet (Hg)

Green Bay MSD, Green Bay, WI
FBI Stack S08, Run #1

Molecular weight of gas at the DGM:

$M_d = ((44 \times \%CO_2) + (32 \times \%O_2) + (28 \times (\%N_2 + \%CO)))/100\%$

$M_d = ((44 \times 11) + (32 \times 7.48) + (28\ (81.5 + 0)))/100\%$

$M_d =$ 30.05 lb/lb-mole

Molecular weight of gas at the stack:

$M_s = M_d\ (1 - B_{ws}) + M_w \times B_{ws}$

$M_s = (30.05 \times (1 - 0.0194)) + (18 \times 0.0194)$

$M_s =$ 29.82 lb/lb-mole

Velocity of stack gas:

$v_s = K_p \times C_p\ [\varnothing p]^{1/2} \times [T_s/(P_s M_s)]^{1/2}$

$v_s = (85.49 \times 0.84 \times (0.792)\text{^}1/2 \times [572 / (29.65 \times 29.82)]\text{^}1/2$

$v_s =$ 51.40 ft/s

Volumetric flow rate of actual stack gas:

$Qa = v_s \times A_s \times 60$ sec/min

$Q_a = (51.4) \times (3.045384) \times (60$ sec/min)

$Q_a =$ 9392 cfm

Volumetric flow rate of dry stack gas, standardized:

$Q_{sd} = (60$ sec/min) $\times (1 - B_{ws})\ v_s\ A_s\ (T_{std} / T_s) \times (P_s/P_{std})$

$Q_{sd} = (60$ sec/min) $\times (1 - 0.0194) \times 51.4 \times 3.045384 \times (528 / 572) \times (29.65 / 29.92)$

$Q_{sd} =$ 8425 dscfm

Isokinetic sampling ratio expressed as percentage:

$I = 100\ T_s\ [(K_3 \times V_{lc}) + (Y_m \times V_m \times P_m / T_m)] / (60 \times Q \times v_s \times P_s \times A_n)$

$I = 100 \times (572) \times ((0.002669 \times 46) + (0.985 \times 114.39 \times 29.79 / 541)))/(60 \times 180 \times 51.4 \times 29.65 \times 0.000218)$

$I =$ 100.9 %

*Note: Values may not agree exactly with results shown elsewhere in this report due strictly to rounding

Advanced Industrial Resources, Inc.
Sample Calculation Sheet (Hg)

Green Bay MSD, Green Bay, WI
FBI Stack S08, Run #1

Concentration of Hg in dry stack gas, standardized:

c= (m_{Hg} / $V_{m(std)}$) (35.32 ft^3 / m^3)

c= (0.0585 / 109.49) x 35.32

c= 0.0189 mg/dscm

Concentration of Hg in dry stack gas, standardized, Corrected to 7% O_2:

c'= c * (20.9-7)/(20.9-%O_2)

c'= (0.18871) x (20.9-7)/(20.9-7.48)

c'= 0.0195 mg/dscm corr 7%O_2

Concentration of Hg in dry stack gas, standardized:

c= (mg/dscm) / (35.32 ft^3 / m^3) / (64.8 mg/gr) x 1000000

c= (0.018871) / 35.32 / 64.8*1000000

c= 8.25 10^{-6} gr/dscf

Emission rate of Hg, time basis:

E= $c_{mg/dscm}$ x Q_{sd} x (60 min/hr) x (2.2046 x 10^{-6} lb/mg) / (35.32 ft^3 / m^3)

E= 0.018871 x 8425 x 60 x 2.2046 x 10-6 / 35.32

E= 0.000595 lb/hr

*Note: Values may not agree exactly with results shown elsewhere in this report due strictly to rounding

EXAMPLE CALCULATIONS

$A_n = D_n^2 \pi / 4$

$A_s = D_s^2 \pi / 4$

$B_{ws} = V_{w(std)} / (V_{m(std)} + V_{w(std)})$

$c_{analyte} = (m_{analyte} / V_{m(std)}) (35.31466\ ft^3/m^3)$

$'c_{analyte} = (m_{analyte} / V_{m(std)}) (0.015432\ gr/mg)$

$c_{analyte} = 'c_{analyte}\ MW_{analyte} / 24.04\ l/mol$

$CC = t_{0.975} (S_d / n^{1/2})$

$d = 1/n\ (Sd_i)$

$DE = (E_{Inlet} - E_{Outlet}) / E_{,Inlet} \times 100\%$

$E_{analyte} = (m_{analyte} / V_{m(std)})\ Q_{sd}\ (60\ min/hr)\ (2.2046 \times 10^{-6}\ lb./mg)$

$E_{analyte} = c_{analyte}\ Q_{sd}\ (60\ min/hr)\ (2.2046 \times 10^{-6}\ lb./mg)$

$I = 100\ T_s\ (K_3\ V_{lc} + Y_m\ V_m\ P_m / T_m) / (60\ \theta\ v_s\ P_s\ A_n)$

where $K_3 = 0.002669\ (in.\ Hg\ ft^3) / (mL\ °R)$

$K_I = [(2.0084 \times 10^7\ \Delta H_@)\ A_n\ (1 - B_{ws})]^2\ (M_d / M_s)\ (T_m / T_s)\ (P_s / P_m)$

$M_d = 0.44\ (\%\ CO_2) + 0.32\ (\%\ O_2) + 0.28\ (\%\ N_2 + \%\ CO)$

$M_s = M_d\ (1 - B_{ws}) + M_w\ B_{ws}$

$P = Qsd / F\text{-}Factor \times 60 \times (20.9\text{-}O_2) / 20.9$

$P_m = P_{bar} + \Delta H / 13.6$

$P_s = P_{bar} + p_g / 13.6$

$Q_a = (60\ s/min)\ v_s\ A_s$

$Q_{sd} = (60\ s/min)\ (1 - B_{ws})\ v_s\ A_s\ (T_{std} / T_s)\ (P_s / P_{std})$

$RA = [Abs(d) + Abs(CC)]/RM$

$S_d = [(Sd_i^2 - (Sdi)^2/n)/(n-1)]^{1/2}$

$T_m = t_m + 460°$

$T_s = t_s + 460°$

$V_{m(std)} = V_m\ Y_m\ (T_{std} / T_m)\ (P_m / P_{std})$

$V_{w(std)} = (V_{lc}\ \rho_w\ R\ T_{std}) / (M_w\ P_{std})$

$v_s = K_p\ C_p\ [\Delta p]^{1/2}\ [T_s / (P_s\ M_s)]^{1/2}$

NOMENCLATURE

Symbol	Units	Description
Abs(x)	dimensionless	Absolute value of parameter x
A_n	ft^2	Area of the nozzle
A_s	ft^2	Area of the stack
B_{ws}	dimensionless	Volume proportion of water in the stack gas stream
C_p	dimensionless	Type S pitot tube coefficient
$c_{analyte}$	mg/dscm	Concentration of analyte in dry stack gas, standardized
$'c_{analyte}$	gr./dscf	Concentration of analyte in dry stack gas, standardized
$'c_{analyte}$	ppm	Concentration of analyte in dry stack gas, standardized
CC	dimensionless	One-tailed 2.5% error confidence coefficient
d	ppm	Arithmetic mean of differences
d_i	ppm	Difference between individual CEM and reference method concentration value
D_n	inches	Internal diameter of the nozzle at the entrance orifice
D_s	inches	Internal diameter of the stack at sampling location
DE	percent	Destruction efficiency
ΔH	inches H_2O	Average pressure differential across the meter orifice
$\Delta H@$	inches H_2O	Orifice pressure differential that corresponds to 0.75 cfm of air at 68 °F and 29.92 inches of Hg
Δp	inches H_2O	Velocity head of stack gas
$E_{analyte}$	lb./hour	Emission rate of analyte, time basis
I	percent	Isokinetic sampling ratio expressed as percentage
K_I	dimensionless	K-factor, ratio of DH to DP, ideal
K_p	$ft[(lb/lb\text{-}mol)(in.\ Hg)]^{1/2}$	Type S pitot tube constant,
	$s[(°R)(in.\ H_2O)]^{1/2}$	= 85.49
L_p	cfm	Measured post-test leakage rate of the sampling train
M_d	lb./lb.-mole	Molecular weight of gas at the DGM
M_s	lb./lb.-mole	Molecular weight of gas at the stack

NOMENCLATURE

Symbol	Units	Description
M_w	lb./lb.-mole	Molecular weight of water,
		= 18.0
$m_{analyte}$	mg	Mass of analyte in the sample
n	dimensionless	Number of data points
P	MMBtu	Fuel firing rate
P_{bar}	inches Hg	Barometric pressure at measurement site
P_{input}	tons/hour	Process dry mass input rate
p_g	inches H_2O	Gauge (static) pressure of stack gas
P_m	inches Hg	Absolute pressure of meter gases
P_s	inches Hg	Absolute pressure of stack gases
P_{std}	inches Hg	Standard absolute pressure
		= 29.92
Q_a	cfm	Volumetric flow rate of actual stack gas
Q_{sd}	dscfm	Volumetric flow rate of dry stack gas, standardized
R	(in. Hg)(ft^3)	Ideal gas constant,
	(lb-mole)(°R)	= 21.85
RA	percent	Relative accuracy
RE	percent	Removal efficiency
RM	ppm	Average reference method concentration
r_w	lb/mL	Density of water,
		= 0.002201
r_a	g/mL	Density of acetone,
		= 0.7899
S_d	dimensionless	Standard deviation
T_m	°R	Absolute temperature of dry gas meter
T_s	°R	Absolute temperature of stack gas
T_{std}	°R	Standard absolute temperature,
		= 528
$t_{0.975}$	dimensionless	2.5 percent error t-value
t_m	°F	Temperature of DGM
t_s	°F	Temperature of stack gas
θ	minutes	Total sampling time

NOMENCLATURE

Symbol	Units	Description
V_{lc}	mL	Total volume of liquid collected
V_m	dcf	Volume of gas sample as measured by the DGM
$V_{m(std)}$	dscf	Volume of gas sample as measured by the DGM, standardized
$V_{w(std)}$	scf	Volume of water vapor in the gas sample, standardized
v_s	ft./sec	Velocity of stack gas
Y_m	dimensionless	DGM calibration coefficient
Y_c	dimensionless	DGM calibration check value
Y_w	dimensionless	Reference (wet) gas meter calibration coefficient
% CO_2	percent	Percent CO_2 by volume, dry basis
% O_2	percent	Percent O_2 by volume, dry basis
% N_2	percent	Percent N_2 by volume, dry basis

APPENDIX D

FIELD DATA

SEE ATTACHED CD FOR COMPLETE MONITOR DATA

Advanced Industrial Resources, Inc.
Field Data Sheet

Client:	Green Bay MSD	**Test Date:**	December 12, 2019
Location:	Green Bay, WI	**Console ID:**	C-10
Source:	FBI Stack S08	**Y_m / $\Delta H_@$:**	0.985 1.825
Test Team:	SS, JG, GE	**Sampling Box ID:**	B-16
EPA Methods:	1, 2, 3A, 4 & 29	**Probe Assembly ID:**	P4-01
D_s (in.):	23.625	**D_n (in.):**	0.200
% O_2	7.480	**Assumed B_{ws}:**	3.0
% CO_2	10.998	**P_{bar} (in. Hg):**	29.70
Start Run:	7:00 AM	**p_g (in. H_2O):**	-0.70
End Run:	10:03 AM	**Minutes/Point:**	15.0
Run Number:	1	**K-Factor:**	1.6

		Inches H_2O			Temperature Readings (°F)						
Point	**Meter (dcf)**	**Δp**	**ΔH**	**$(\Delta p)^{1/2}$**	**t_s**	**Probe**	**Filter**	**Last Impinger**	**t_m Average**	**Filter Exit**	**Vacuum (in. Hg)**
1	803.250	0.75	1.20	0.866	110	249	248	57	77	N/A	2
2	812.83	0.77	1.23	0.877	112	251	252	57	77	N/A	2
3	821.70	0.80	1.28	0.894	111	250	250	58	77	N/A	2
4	831.37	0.81	1.30	0.900	112	251	248	60	77	N/A	2
5	841.92	0.79	1.26	0.889	110	250	248	60	79	N/A	2
6	851.81	0.78	1.25	0.883	111	251	250	61	80	N/A	2
7	861.25	0.75	1.20	0.866	111	249	250	61	80	N/A	2
8	870.92	0.78	1.25	0.883	112	250	249	62	81	N/A	2
9	880.58	0.78	1.25	0.883	113	251	250	62	81	N/A	3
10	889.99	0.82	1.31	0.906	114	264	263	62	86	N/A	3
11	898.35	0.82	1.31	0.906	114	269	263	61	86	N/A	3
12	907.18	0.85	1.36	0.922	114	258	263	60	86	N/A	3
End	917.640										

Total Moisture Collected (mL):	46.0
Theoretical maximum moisture collection at saturation (ml):	239.0
Pre System Leak Check (cfm):	0.001
Post System Leak Check (cfm):	0.002

Advanced Industrial Resources, Inc.
Field Data Sheet

Client:	Green Bay MSD	**Test Date:**	December 12, 2019
Location:	Green Bay, WI	**Console ID:**	C-10
Source:	Incinerator 1	**Y_m / $\Delta H_@$:**	0.985 1.825
Test Team:	SS, JG, GE	**Sampling Box ID:**	B-16
EPA Methods:	1, 2, 3A, 4 & 29	**Probe Assembly ID:**	P4-01
D_s (in.):	23.625	**D_n (in.):**	0.200
% O_2	7.749	**Assumed B_{ws}:**	3.0
% CO_2	10.9	**P_{bar} (in. Hg):**	29.70
Start Run:	10:25 AM	**p_g (in. H_2O):**	-0.70
End Run:	1:29 PM	**Minutes/Point:**	15.0
Run Number:	2	**K-Factor:**	1.6

		Inches H_2O			Temperature Readings (°F)						
Point	**Meter (dcf)**	**Δp**	**ΔH**	**$(\Delta p)^{1/2}$**	**t_s**	**Probe**	**Filter**	**Last Impinger**	**t_m Average**	**Filter Exit**	**Vacuum (in. Hg)**
1	917.751	0.77	1.23	0.877	111	244	262	62	82	N/A	2
2	926.91	0.78	1.25	0.883	113	253	263	62	82	N/A	2
3	936.23	0.76	1.22	0.872	113	253	263	56	83	N/A	2
4	945.71	0.76	1.22	0.872	113	253	260	54	84	N/A	2
5	954.92	0.80	1.28	0.894	113	250	260	53	85	N/A	2
6	964.59	0.80	1.28	0.894	113	250	261	54	86	N/A	2
7	973.22	0.73	1.17	0.854	114	251	261	55	86	N/A	2
8	982.88	0.71	1.14	0.843	114	252	262	55	86	N/A	2
9	992.47	0.80	1.28	0.894	114	253	260	55	85	N/A	2
10	1001.22	0.81	1.30	0.900	114	252	260	55	86	N/A	2
11	1010.89	0.78	1.25	0.883	113	252	260	56	86	N/A	2
12	1020.56	0.77	1.23	0.877	113	250	261	57	86	N/A	2
End	1029.264										

Total Moisture Collected (mL):	48.0
Theoretical maximum moisture collection at saturation (ml):	239.8
Pre System Leak Check (cfm):	0.001
Post System Leak Check (cfm):	0.002

Advanced Industrial Resources, Inc.
Field Data Sheet

Client:	Green Bay MSD	**Test Date:**	December 12, 2019
Location:	Green Bay, WI	**Console ID:**	C-10
Source:	FBI Stack S08	**Ym / DH@:**	0.985 1.825
Test Team:	SS, JG, GE	**Sampling Box ID:**	B-16
EPA Methods:	1, 2, 3A, 4 & 29	**Probe Assembly ID:**	P4-01
D_s (in.):	23.625	**Dn (in.):**	0.200
% O_2	8.386	**Assumed Bws:**	3.0
% CO_2	10.352	**Pbar (in. Hg):**	29.70
Start Run:	1:50 PM	**pg (in. H2O):**	-0.70
End Run:	4:54 PM	**Minutes/Point:**	15.0
Run Number:	3	**K-Factor:**	1.6

		Inches H_2O			Temperature Readings (°F)						
Point	**Meter (dcf)**	**Δp**	**ΔH**	**$(\Delta p)^{1/2}$**	**t_s**	**Probe**	**Filter**	**Last Impinger**	**t_m Average**	**Filter Exit**	**Vacuum (in. Hg)**
1	1029.365	0.86	1.38	0.927	114	240	260	62	80	N/A	2
2	1039.03	0.86	1.38	0.927	114	245	258	62	80	N/A	2
3	1048.38	0.80	1.28	0.894	113	250	258	62	82	N/A	2
4	1058.04	0.79	1.26	0.889	113	252	258	62	83	N/A	2
5	1067.70	0.79	1.26	0.889	113	250	258	63	84	N/A	2
6	1077.37	0.80	1.28	0.894	114	248	256	64	85	N/A	2
7	1086.09	0.78	1.25	0.883	114	244	263	64	85	N/A	2
8	1096.01	0.72	1.15	0.849	114	251	262	60	86	N/A	2
9	1106.65	0.78	1.25	0.883	113	253	260	60	86	N/A	2
10	1116.37	0.78	1.25	0.883	113	250	258	60	87	N/A	2
11	1129.98	0.80	1.28	0.894	113	256	260	59	86	N/A	2
12	1125.71	0.78	1.25	0.883	113	252	258	53	87	N/A	3
End	1145.840										

Total Moisture Collected (mL):	51.0
Theoretical maximum moisture collection at saturation (ml):	252.7
Pre System Leak Check (cfm):	0.002
Post System Leak Check (cfm):	0.001

Advanced Industrial Resources, Inc.
Cyclonic Flow Absence Verification Field Data
EPA Method 1

Client:	Green Bay MSD	**Date:**	October 12, 2019
Location:	Green Bay, WI	**D_s (in.):**	23.625
Source:	FBI Stack S08	**A_s (ft^2):**	3.04
Test Team:	SS, JG, GE	**D_n (in.):**	0.200
Probe ID:	P4-01	**A_n (ft^2):**	0.000218
C_p:	0.84		

t_m (°F):	71
Console ID:	C-10
Y_m:	0.985
$\Delta H_@$:	1.825
Assumed B_{ws}:	3%
P_{bar} (in. Hg):	29.70

Point	Δp (in. H_2O)	α (degrees)
1	0.0	0.0
2	0.0	0.0
3	0.0	5.0
4	0.0	0.0
5	0.0	0.0
6	0.0	0.0
Change Ports		
1	0.0	0.0
2	0.0	0.0
3	0.0	5.0
4	0.0	0.0
5	0.0	0.0
6	0.0	0.0

Advanced Industrial Resources, Inc.
Source Description Sheets

Client:	Green Bay MSD	**Date:**	October 12, 2019
Location:	Green Bay, WI	**Test Team:**	SS, JG, GE
Source:	FBI Stack S08		

D_n (in.):	0.200
A_n (ft^2):	0.000218
D_s (in.):	23.625
A_s (ft^2):	3.04
Length A:	> 47.3
Length B:	> 189.0
t_{amb} (°F):	71
Assumed B_{ws}:	3%
P_{bar} (in. Hg):	29.7
P_g (in. H_2O):	-0.70
% O_2:	9.0%
% CO_2:	10.0%
Console ID:	C-10
Y:	0.985
$\Delta H_@$:	1.825
C_p:	0.84
K-Factor:	1.6

Point	Δp (in. H_2O)	t_s (°F)
1	0.75	112
2	0.80	110
3	0.78	111
4	0.78	113
5	0.81	110
6	0.82	112
Change Ports		
1	0.83	113
2	0.85	112
3	0.85	113
4	0.87	111
5	0.86	114
6	0.75	112

Digital Photograph of Source Not Available

Sketch of Stack

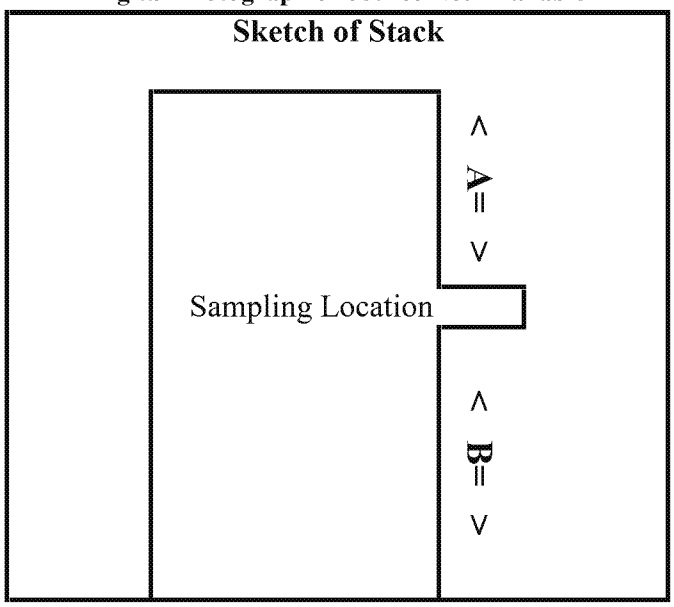

Traverse Point Locations
for
Green Bay MSD
FBI Stack S08

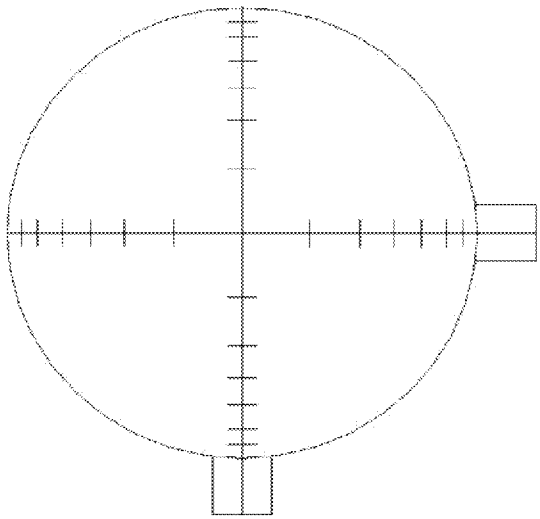

23.625 Inch Diameter Stack
Two Ports at 90°

Sampling Point	Distance from Stack Wall (inches)
1	1.0
2	3.4
3	7.0
4	16.6
5	20.2
6	22.6

Advanced Industrial Resources, Inc.

Field Data Sheet

Client:	Green Bay MSD	Test Date:	12-12-19
Location:	Green Bay, WI	Console ID:	C-10
Source:	Incinerator 1 (S08)	Y_m / $\Delta H_@$:	0.985 1.825
Test Team:	SS, JG, GE	Sampling Box ID:	P-16
EPA Methods:	1-4, 29	Probe Assembly ID:	P4-01
D_s (in.):	~~23.5~~ 23.625 DPE 1/10/20	D_n (in.):	0.200
% O_2	7.48	Assumed B_{ws}:	3%
% CO_2	10.998	P_{bar} (in. Hg):	~~99.70~~ JG 29.70
Start Run:	7:00	p_g (in. H_2O):	-0.70
End Run:	10:03	Minutes/Point:	15
Run Number:	1 Comp	K-Factor:	1.6

Point	Meter (dcf)	Inches H_2O Δp	Inches H_2O ΔH	Temperature Readings (°F) t_s	Probe	Filter Box	Last Impinger	t_m Inlet	t_m Outlet	Filter Exit (M5 or CPM)	Vacuum (in. Hg)
1	803.25	0.75	1.2	110	249	248	57	77	77	N/A	2
2	812.83	0.77	1.23	112	251	252	57	77	77	N/A	2
3	821.70	0.80	1.28	111	250	250	59	77	77	N/A	2
4	831.37	0.81	1.30	112	251	249	60	77	77	N/A	2
5	841.92	0.79	1.26	110	250	249	60	79	79	N/A	2
6	851.81	0.79	1.25	111	251	250	61	80	80	N/A	2
7											
8											
9											
10											
11											
12											
Change Ports											
1	861.25	0.75	1.2	111	249	250	61	80	80	N/A	2
2	870.92	0.79	1.25	112	250	249	62	81	81	N/A	2
3	880.58	0.78	1.25	113	251	250	62	81	81	N/A	3
4	889.99	0.82	1.31	114	264	263	62	86	86	N/A	3
5	898.35	0.82	1.31	114	269	263	61	86	86	N/A	3
6	907.18	0.85	1.36	114	259	263	60	86	86	N/A	3
7											
8											
9											
10											
11											
12											
End	917.640										

Moisture Collected (g)

	Initial	Final	Net
Body:	400	436	36
Silica Gel:	200.0	210	10
Gel Number:		Total:	46

Pre-Run Leak Checks (dcfm @ "Hg)

Sampling Line: 0.001 @ 6"
Pitot A: ✓
Pitot B: ✓

Post-Run Leak Checks (dcfm @ "Hg)

Sampling Line: 0.007 @ 5"
Pitot A: ✓
Pitot B: ✓

Silica Gel Desc. (initial): Blue
Silica Gel Desc. (final): Amber
Test Team Leader Review:
Data Entry Review: [signature]

Reagent 1: H_2O_2 Lot No: 19090206
Reagent 2: H_2SO_4 Lot No: 19160074
$KMNO_4$ 178323
HNO_3 18075381
HCl C584901

Advanced Industrial Resources, Inc.

Field Data Sheet

Client:	Green Bay MSD	Test Date:	12-12-19
Location:	Green Bay, WI	Console ID:	C-10
Source:	Incinerator 1 (508)	Y_m / $\Delta H_@$:	0.9851 1.825
Test Team:	SS, JG, GE	Sampling Box ID:	B-16
EPA Methods:	1-4, 29	Probe Assembly ID:	P4-01
D_s (in.):	~~23.5~~ 23.625 DOS 11/20	D_n (in.):	0.200
% O_2	7.749	Assumed B_{ws}:	3%
% CO_2	10.865	P_{bar} (in. Hg):	29.70
Start Run:	10:25	p_g (in. H_2O):	-0.70
End Run:	13:29	Minutes/Point:	15
Run Number:	2 Comp	K-Factor:	1.6

Point	Meter (dcf)	Inches H_2O Δp	Inches H_2O ΔH	Temperature Readings (°F) t_s	Probe	Filter Box	Last Impinger	t_m Inlet	t_m Outlet	Filter Exit (M5 or CPM)	Vacuum (in. Hg)
1	917.751	0.77	1.23	114	244	262	63	82	82	N/A	2
2	926.91	0.79	1.25	113	253	263	62	82	82	N/A	2
3	936.23	0.76	1.22	113	253	263	56	83	83	N/A	2
4	945.71	0.76	1.22	113	253	260	54	84	84	N/A	2
5	954.92	0.80	1.28	113	250	260	53	85	85	N/A	2
6	964.59	0.80	1.28	113	250	261	54	85	85	N/A	2
7	~~982.88~~ 36										
8											
9											
10											
11											
12											
Change Ports											
1	973.22	0.73	1.17	114	251	261	55	86	86	N/A	2
2	982.88	0.71	1.12	114	252	262	55	86	86	N/A	2
3	992.47	0.80	1.28	114	253	260	55	85	85	N/A	2
4	1001.22	0.81	1.30	114	252	260	55	86	86	N/A	2
5	1010.99	0.79	1.25	113	252	260	56	86	86	N/A	2
6	1020.56	0.77	1.23	113	250	261	57	86	86	N/A	2
7											
8											
9											
10											
11											
12											
End	1029.264										

Moisture Collected (g)

	Initial	Final	Net
Body:	400	434	34
Silica Gel:	200.0	214	14
Gel Number:		Total:	48

Pre-Run Leak Checks (dcfm @ "Hg)

Sampling Line: 0.001 @ 6"
Pitot A: ✓
Pitot B: ✓

Post-Run Leak Checks (dcfm @ "Hg)

Sampling Line: 0.002 @ 5"
Pitot A: ✓
Pitot B: ✓

Silica Gel Desc. (initial): Blue
Silica Gel Desc. (final): Amber
Test Team Leader Review:
Data Entry Review:

Reagent 1:	H_2O_2	Lot No:	19090206
Reagent 2:	H_2SO_4	Lot No:	19160074
	$KMNO_4$		178323
	HNO_3		18075381
	HCL		C584401

Advanced Industrial Resources, Inc.

Field Data Sheet

Client:	Green Bay MSD	Test Date:	12-12-19
Location:	Green Bay, WI	Console ID:	C-10
Source:	Incinerator 1 (508)	Y_m / $\Delta H_@$:	0.985 / 1.825
Test Team:	SG, SS, GE	Sampling Box ID:	B-16
EPA Methods:	1-4, 29	Probe Assembly ID:	PA-0
D_s (in.):	~~23.5~~ 23.625 OK 1/10/20	D_n (in.):	0.200
% O_2	8.386	Assumed B_{ws}:	3%
% CO_2	10.352	P_{bar} (in. Hg):	29.70
Start Run:	13:50	p_g (in. H_2O):	-0.70
End Run:	16:54	Minutes/Point:	15
Run Number:	3 Comp	K-Factor:	1.6

Point	Meter (dcf)	Inches H_2O Δp	Inches H_2O ΔH	t_s	Probe	Filter Box	Last Impinger	t_m Inlet	t_m Outlet	Filter Exit (M5 or CPM)	Vacuum (in. Hg)
1	1029.365	0.86	1.38	114	240	260	62	80	80	N/A	2
2	1038.03	0.86	1.38	114	245	258	62	80	80	N/A	2
3	1048.38	0.80	1.28	113	250	258	62	82	82	N/A	2
4	1058.04	0.79	1.26	113	252	258	62	83	83	N/A	2
5	1067.70	0.79	1.26	113	250	258	63	84	84	N/A	2
6	1077.37	0.80	1.28	114	248	256	64	85	85	N/A	2
7											
8											
9											
10											
11											
12											
Change Ports											
1	1086.085	0.78	1.25	114	244	263	64	85	85	N/A	2
2	1096.01	0.72	1.15	114	251	262	60	86	86	N/A	2
3	1106.65	0.78	1.25	113	253	260	60	86	86	N/A	2
4	1116.37	0.78	1.25	113	250	258	60	87	87	N/A	2
5	1129.98	0.80	1.28	113	256	260	59	86	86	N/A	2
6	1135.71	0.78	1.25	113	252	258	53	87	87	N/A	3
7											
8											
9											
10											
11											
12											
End	~~1045.840~~ 1145.840 dw										

Moisture Collected (g)

	Initial	Final	Net
Body:	400	434	34
Silica Gel:	200.0	217	17
Gel Number:		Total:	51

Pre-Run Leak Checks (dcfm @ "Hg)

Sampling Line: 0.002 @ 5"
Pitot A: ✓
Pitot B: ✓

Post-Run Leak Checks (dcfm @ "Hg)

Sampling Line: 0.001 @ 4"
Pitot A: ✓
Pitot B: ✓

Silica Gel Desc. (initial): Blue
Silica Gel Desc. (final): Amber
Test Team Leader Review:
Data Entry Review:

Reagent 1:	H_2O_2	Lot No:	19090206
Reagent 2:	H_2SO_4	Lot No:	1916 0074
	$KMNO_4$		178323
	HNO_3		18075381
	HCl		6584901

Advanced Industrial Resources, Inc.

Cyclonic Flow Absence Verification Field Data

EPA Method 1

Client: Green Bay MSD
Location: Green Bay, WI
Source: Incinerator 1 (S08)
Test Team: SS, JG, GE
Probe ID: P4-01
C_p: 0.84

t_m (°F): 71
Console ID: C-010
Y_m: 0.985
$\Delta H_@$: 1.825
Assumed B_{ws}: 3%
P_{bar} (in. Hg): 29.70

Date: 10/12/19
D_s (in.): ~~23.5~~ 23.625 DOS
A_s (ft^2): ~~3.07~~ 3.09 1/10/20
D_n (in.): 0.200
A_n (ft^2): 0.060872

Point	Δp (in. H_2O)	α (degrees)
1	0.0	0
2	0.0	0
3	0.0	5
4	0.0	0
5	0.0	0
6	0.0	0
Change Ports		
1	0.0	0
2	0.0	0
3	0.0	5
4	0.0	0
5	0.0	0
6	0.0	0

Test Team Leader Review:
Data Entry Review:

Advanced Industrial Resources, Inc.

Source Description Sheets

Client: Green Bay MSD
Location: Green Bay, WI
Source: Incinerator 1 (S08)

Date: 10/12/19
Test Team: SS, JG, GE

D_n (in.): 0.200
A_n (ft^2): 0.000872
D_s (in.): ~~23.5~~ 23.625 DPR
A_s (ft^2): ~~3.01~~ 3.04 11/10/20
Length A (in.): ~~47~~ > 47.3
Length B (in.): ~~188~~ > 189.0

t_{amb} (°F): 71
Assumed B_{ws}: 3
P_{bar} (in. Hg): 29.70
P_g (in. H_2O): -0.70
% O_2: 9
% CO_2: 10
Console ID: C-010
Y: 0.985
$\Delta H_@$: 1.825
C_p: 0.84
K-Factor: 1.6 11/6/19

Point	Δp (in. H_2O)	t_s (°F)
1	0.75	112
2	0.80	110
3	0.78	111
4	0.78	113
5	0.81	110
6	0.82	112
Change Ports		
1	0.83	113
2	0.85	112
3	0.85	113
4	0.87	111
5	0.86	114
6	0.75	112
	0.83	112

Sketch of Stack

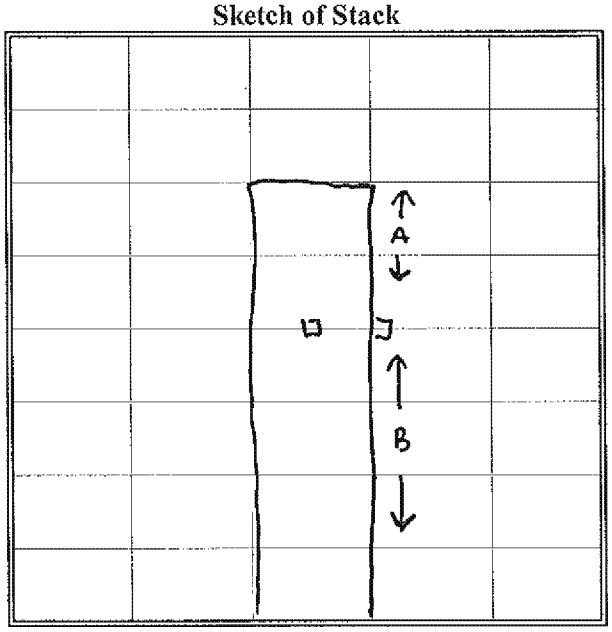

Test Team Leader Review:
Data Entry Review:

APPENDIX E

LABORATORY REPORTS

Advanced Industrial Resources, Inc.

3407 Novis Pointe
Acworth, GA 30101

Project ID: Green Bay MSD

Mercury

EPA Method 29 Analysis

Analytical Report
34026

el1

Element One, Inc.
6319-D Carolina Beach Rd., Wilmington, NC 28412
910-793-0128 FAX: 910-792-6853 e1lab@e1lab.com

The following data for Analytical Report 34026
has been reviewed for completeness, accuracy,
adherence to method protocol,
and compliance with quality assurance guidelines.

Review by:

Katie Gattis, Quality Assurance Officer
December 18, 2019

Report Reviewed and Finalized By:

Ken Smith, Laboratory Director
December 18, 2019

ED_012958_00010468-00045

SUMMARY OF RESULTS

ED_012958_00010468-00046

Summary of Analysis

Summary of Method 29 Mercury Analysis

Run Number		Average Total Catch, µg	Front Half µg	H_2O_2 /HNO_3 µg	Empty Impinger µg	$KMnO_4$ µg	HCl µg
Stack S08-M29-R1	#1	58.5	< 0.1	10.1	< 0.2	47.2	1.55
	#2		< 0.1	10.1	< 0.2	46.5	1.54
Stack S08-M29-R2	#1	62.3	< 0.1	10.3	< 0.2	49.5	2.64
	#2		< 0.1	10.2	< 0.2	49.5	2.62
Stack S08-M29-R3	#1	69.4	< 0.1	11.6	0.399	53.7	4.10
	#2		< 0.1	11.6	0.371	52.8	4.11
Reagent Blank	#1	< 0.5	< 0.1	< 0.2	< 0.2	< 0.5	< 0.4
	#2		< 0.1	< 0.2	< 0.2	< 0.5	< 0.4

ANALYTICAL NARRATIVE

ED_012958_00010468-00048

Element One Analytical Narrative

Client:	Advanced Industrial Resources, Inc.	Element One #:	34026
Client ID:	Green Bay MSD	Analyst:	MAR
Method:	Method 29	Dates Received:	12/16/19
Analytes:	Hg	Dates Analyzed:	12/17-18/19

Summary of Analysis

The Method 29 samples were digested, prepared, and analyzed according to Method 29 protocol. Samples were analyzed for mercury on a PerkinElmer FIMS-100 CVAA mercury analyzer.

Detection Limits

The FIMS-100 CVAA instrument reporting limit for mercury was 0.004 µg per aliquot analyzed.

Analysis QA/QC

Duplicate analyses relative percent difference (RPD) and spike sample recovery data are summarized in the Quality Control Section. All QA/QC data was within the criteria of the method.

Additional Comments

The reported results have not been corrected for any blank values or spike recovery values. The reported results relate only to the items tested or calibrated.

The $KMnO_4$ c5b fractions had leaked upon arrival. Using the volume marked line on the sample bottles, approximately 40-90mL sample was lost. Per client's instructions, samples were analyzed and prepared according to method protocol. Results may be biased for the $KMnO_4$ c5b fractions.

QUALITY CONTROL SUMMARY

ED_012958_00010468-00050

Summary of Quality Control Data

Mercury Duplicate Analysis RPD

(Method 29 QC limits: < 10% for RPD)

Run Number	Front Half	H_2O_2/HNO_3	Empty Imp	$KMnO_4$	HCl
Stack S08-M29-R1	NA	0.4%	NA	1.4%	0.1%
Stack S08-M29-R2	NA	0.6%	NA	0.1%	0.6%
Stack S08-M29-R3	NA	0.1%	7.4%	1.7%	0.3%
Reagent Blank	NA	NA	NA	NA	NA

Mercury Spike Recoveries

(Method 29 QC limits: 75-125% for Spike Recoveries)

Run Number		Front Half	H_2O_2/HNO_3	Empty Imp	$KMnO_4$	HCl
Stack S08-M29-R3	#1	113%	101%	99%	111%	108%
	#2	112%	97%	99%	109%	111%

SAMPLE CUSTODY

ED_012958_00010468-00052

34026

Advanced Industrial Resources, Inc.
Compliance Sample Custody Record

Client: Green Bay MSD
Green Bay, WI

Sample ID		Date	Source	Description	Matrix	Analysis Desired: Method 29				Sample Condition	Comments
KR10375	1	12/12/2019	Stack 508	T1 Container 1	MS	x					
KR10375	2	12/12/2019	Stack 508	T1 Container 2	MS	x					per basis email, Hg only.
KR10375	3	12/12/2019	Stack 508	T1 Container 4	MS	x					
KR10375	4	12/12/2019	Stack 508	T1 Container 5A	MS	x					
KR10375	5	12/12/2019	Stack 508	T1 Container 5B	MS	x					Rush - need results
KR10375	6	12/12/2019	Stack 508	T1 Container 5C	MS	x					12/20.
KR10375	7	12/12/2019	Stack 508	T2 Container 1	MS	x					
KR10375	8	12/12/2019	Stack 508	T2 Container 3	MS	x					
KR10375	9	12/12/2019	Stack 508	T2 Container 4	MS	x					CSB samples had
KR10375	10	12/12/2019	Stack 508	T2 Container 5A	MS	x					broken upon
KR10375	11	12/12/2019	Stack 508	T2 Container 5B	MS	x					arrival. Per
KR10375	12	12/12/2019	Stack 508	T2 Container 5C	MS	x					Ross via email,
KR10375	13	12/12/2019	Stack 508	T3 Container 1	MS	x					caution all
KR10375	14	12/12/2019	Stack 508	T3 Container 3	MS	x					analysis - KLO
KR10375	15	12/12/2019	Stack 508	T3 Container 4	MS	x					
KR10375	16	12/12/2019	Stack 508	T3 Container 5A	MS	x					
KR10375	17	12/12/2019	Stack 508	T3 Container 5B	MS	x					
KR10375	18	12/12/2019	Stack 508	T3 Container 5C	MS	x					

Relinquished By/Sign:	Date/Time	Received By / Sign:	Relinquished By / Sign:	Date/Time	Received By / Sign:
[illegible]	12-14-19 9:10				[illegible] 12-16-19 @ 1125 via UPS

Field Team Members: GE JG SS

AIR Field Supervisor: Greg Fang

Field Supervisor Sign: [illegible]

AIR Contact Name: Derek Stephens

AIR Contact Number: (404) 843-2100

Analyses To Be Performed By:
Element One
6318-D Carolina Beach Rd.
Wilmington, NC 28412
910-793-0128

ED_012958_00010468-00053

34026

Advanced Industrial Resources, Inc.
Compliance Sample Custody Record

Client: Green Bay MSD
Green Bay, WI

Sample ID		Date	Source	Description	Matrix	Analysis Desired: Method 29				Sample Condition	Comments
KR10375	19	12/12/2019	Stack 508	Container 8A	M5	x					0.1N HNO3 blank
KR10375	20	12/12/2019	Stack 508	Container 8B	M5	x					H2O blank
KR10375	21	12/12/2019	Stack 508	Container 9	M5	x					5% HNO3/10% H2O2 blank
KR10375	22	12/12/2019	Stack 508	Container 10	M5	x					4% KMNO4/10% H2SO4 Blank
KR10375	23	12/12/2019	Stack 508	Container 11	M5	x					8N HCL blank
KR10375	24	12/12/2019	Stack 508	Container 12	M5	x					Filter blank

Relinquished By/Sign:	Date/Time	Received By / Sign:	Relinquished By / Sign:	Date/Time	Received By / Sign:
[illegible]	12-14-19 9:10				[illegible]

Field Team Members: GB JG SS

AIR Field Supervisor: Greg Essig
Field Supervisor Sign:
AIR Contact Name: Derek Stephens
AIR Contact Number: (404) 843-2100

Analyses To Be Performed By:
Element One
6319-B Carolina Beach Rd.
Wilmington, NC 28412
910-793-0128

@1125 via UPS

elementOne
34026 AIR M29 Report Packet
Page 11 of 22

ED_012958_00010468-00054

ANALYTICAL DATA

ED_012958_00010468-00055

Analytical Calculations

Mercury-

$$\textbf{Mercury Results (µg)} = \frac{\textbf{CVAA Results (µg)}}{\textbf{Aliquot (ml)}} * \textbf{Final Volume (ml)}$$

Where-

CVAA Results= Raw sample reading (µg)--*Hg-Data Sheet*

Aliquot= Sample Aliquot (Alq.)--*Hg-Data Sheet*

Final Volume=Final Volume (FV)*--*Sample Submission*
* With the exception of the BH fraction where-
=Received Volume (BV)--*Sample Submission*

Analytical Calculations

Spike Recovery-

$$\textbf{Spike (\%)} = \frac{\textbf{(Spiked Result (µg/L) – Sample Result (µg/L))}}{\textbf{Spike Amount (µg/L)}} \textbf{ X100}$$

Where-

Spike Result = Raw sample concentration (ppb)--*Hg-Data Sheet*

Sample Result = Raw sample concentration (ppb)--*Hg-Data Sheet*

Spike Amount-- *Hg-Data Sheet*

Duplicate Analysis RPD-

$$\textbf{RPD (\%)} = \frac{\textbf{(Duplicate Result (µg/L) - Sample Result (µg/L))}}{\textbf{Average (µg/L)}} \textbf{ X100}$$

Where-

Sample Result and Duplicate Results=Raw sample concentration (ppb) -- *Hg-Data Sheet*

Average= $\frac{\textit{(Duplicate + Sample Results)}}{2}$

elementOne **AIR TESTING SAMPLE SUBMISSION FORM** **Lab ID 34026**

Analysis Due Date 12.18.19
QA/QC/Report Due Date 12.19.19

Client	Advanced Industrial Resources, Inc.
Project ID	Green Bay MSD

Date Received	12.16.19
Time Received	1125

HNO_3 Lot: 1118120 [illegible]	HF Lot: 5117[illegible]	HCl Lot: 4-11[illegible]	**Ref. Method:**
Volume Marked Y / N	Volume Lost Y / N	Acetone Lot: —	**29**

Sample Identification

1	Stack S08-M29-R1	4	Reagent Blank		
2	Stack S08-M29-R2				
	Stack S08-M29-R2 Duplicate				
3	Stack S08-M29-R3				
	Stack S08-M29-R3 Spike				

Analyses Requested Samples 1-4 Hg

Runs / FB	Fil / Ace (FH)		HNO_3 (FH)		5% HNO_3/10% H_2O_2 (BH)			HNO_3 (A)		$KMnO_4$ (B)		HCl (C)	
			pH <2.0 Y / N		pH <2.0 Y / N			pH <2.0 Y / N		pH <2.0 Y / N		pH <2.0 Y / N	
Lab ID	Fil ID	BV ml	BV ml	FV ml	BV ml	Used	FV ml	BV ml	FV ml	BV ml	FV ml	BV ml	FV ml
1			96	100	320			106	200	305	500	220	400
2.D			100	↓	340			102	↓	340	↓	220	↓
3.S			98	↓	325			104	↓	365	↓	225	↓

M-29 Reagent Blank

Lab ID	Fraction			BV, ml	FV, ml	Comments
4	C 7	FH	Acetone Blank			
	C 8A	FH	0.1N HNO_3	300	100	used 100mL C8A
	C 8A	A	0.1N HNO_3	300	—	
	C 8B	B	DI H_2O	96		
	C 9	BH	5% HNO_3/10% H_2O_2	195	50	used 98mL
	C 10	B	4% $KMnO_4$/10%H_2SO_4	~~82~~ 84		84mL C10 + 28mL C8B
	C 11	C	8N HCl DI H_2O	220	400	
	C 12	FH	Filter		100	

Lab Communications

LR3 spiked w/0.1ml 25ppm standard 021419-H

Fractions Received: Runs: C1, C3, C4, C5A, C5B, C5C—RB; C12, C8A, C8B, C9, C10, C11—12.16.19 KLG

SS Page 1 of 1
12/16/2019 12:39:24 PM
SS Form By KLG
Labeled By/Date MAR 12/16/19

FH Prep By/Date MAR 12/17/19
BH Prep By/Date DKH 12/16/19
BH/FH Prep By/Date —
PM Prep By/Date —

A Prep By/Date DKH 12/16/19
B Prep By/Date DKH 12/16/19
C Prep By/Date MAR 12/17/19
ID Verification By / Date DKH 12/16/19

elementOne

Method 29 Microwave Worksheet

Lab ID # e 34026

Client: AIR

Date Digested: 12/11/19 Initials: TAC Worksheet Prepared by: MR

Auto Sample Loc.	Sample Lab ID	# of filters digested	Spike	Prep Volume (ml)	Comments
1	LRB			100	
2	LRB *		0.1mL K		
3	34026-1	1			
9	-2				
10	-3				
11	-4				

HNO_3 Lot #: 118172	mLs Used: 6
HF Lot #: 5716072	mLs Used: 2

LRB spiked w/0.1mL 25ppm standard 021419-K

Element One, Inc. F214 R1 Microwave Sheet M29

MERCURY BATCH DIGESTION - RUN WORKSHEET

Date Prepared/Digested: 12/16/19 Prep By: MAR/BWM SIF File #: 12/17/19-1
Block #1 Temperature: 93.28 Start Time: 5:45 Machine ID: F2
Block #2 Temperature: - Stop Time: 8:00 Batch Analyst: MM
Block #3 Temperature: - Typed By: MM Verified By: DKH

A/S	Curve & QC's	0.4ug/ml working std		BV, ml	FV, ml	Standard Lot Numbers
1	Lab BLK (3/ batch)	0		40	40	Standard #1 (for working std) Lot #: 4807092 RICLA
2	0.004 ug	0.01ml		40	40	Working Standard
3	0.04 ug	0.10ml		40	40	Lot #: Hg3-133-5 by: MM
4	0.08 ug	0.20ml		40	40	Standard #2 (QC #2):
5	0.16 ug	0.40ml		40	40	Lot #: Hg3-133-6
6	0.20ug	0.50ml		40	40	Standard #3 (QC #3):
						Lot #: Hg3-133-7
7	QC #2= 0.08ug	0.2ml #2 std		40	40	
8	QC #3= 0.08ug	0.2ml #3 std		40	40	Curve prepared by: MAR

Initial Review By: MM Date: 12/17/19 Time: 10:30
Final QC Review By: KCU Date: 12/17/19 Time: 1130
Comments: 34026-18,28,38 @1mL

A/S	LAB #	Method	Wt (g)/ FV (mL)	Prep Aliquot Used, mL	Aliquot or Calc Mass	FV, mL or "1" for conc.	Comments
9	33593-18 BL	7470A			0.1	5	TV=5.3
10	L/L	↓			1	1	=0.008
11	33995-2L	M29			4	400	
12	-2LD					↓	
13	34026-1BH					320	
14	-2BH					340	
15	-2BHD					↓	
16	-3BH					325	
17	-3BH+					↓	
18	-4BH					195	
19	-1A	↓			↓	200	

NOTES: Lab blanks and spikes must be prepared with each batch digestion

"+" Denotes spike for Hg. Use calibration working 0.4ug/ml standard at the rate of 0.20ml per 40ml sample, unless otherwise noted.

Digestion chemicals to be added in order at the following rate per 40ml volumes.

H_2SO_4 @ 2.0ml..... HNO_3 @ 1.0ml..... $KMnO_4$ @ 6.0ml..... Persulfate @ 3.2ml

H_2SO_4 Lot # 58115 Willgrove *HNO_3 Lot #* 1118120 Fisher *HCl Lot #:* 4118110 Fisher

Persulfate Lot # Hg3-142-8 *$KMnO_4$ Lot #* Hg3-147-7 *Hydrox Lot#:* Hg3-147-8

Clear samples after digestion with 2.4 ml of Hydroxylamine solution.

Element One, Inc F209 R9 Page 1 of 2

elementOne **MERCURY BATCH DIGESTION - RUN WORKSHEET**

SIF File #: 121719-1

A/S	LAB #	Method	Wt (g)/ FV (mL)	Prep Aliquot Used, mL	Aliquot or Calc Mass	FV, mL or "1" for conc.	Comments
20	34026-2A	M29			4	200	
21	-2AD						
22	-3A						
23	-3A+						
24	-4A						
25	-1B					500	
26	-2B						
27	-2BD						
28	-3B						
29	-3B+						
30	-4B						
31	34020-2	2470A	0.5357/50	4	0.04283	1	
32	-2 1		0.5128/50		0.04102		TV=0.1 ug
33							
34							
35							
36							
37							
38							
39							
40							
41							
42							
43							
44							
45							
46							
47							
48							
49							
50							
51							
52							
53							
54							

Element One, Inc F209 R9

Page 2 of 2

MERCURY BATCH DIGESTION - RUN WORKSHEET

Date Prepared/Digested: 12/18/19 Prep By: MAR/DKH SIF File #: 121819-1
Block #1 Temperature: 93.36 Start Time: 5:45 Machine ID: F2
Block #2 Temperature: ~~93~~ Stop Time: 8:00 Batch Analyst: MR
Block #3 Temperature: 94.06 Typed By: MAR Verified By: DKH

A/S	Curve & QC's	0.4ug/ml working std		BV, ml	FV, ml	Standard Lot Numbers
1	Lab BLK (3/ batch)	0		40	40	Standard #1 (for working std) Lot #: 4807882 NCLA
2	0.004 ug	0.01ml		40	40	Working Standard
3	0.04 ug	0.10ml		40	40	Lot #: Hg3-153-3 by: MAR
4	0.08 ug	0.20ml		40	40	Standard #2 (QC #2):
5	0.16 ug	0.40ml		40	40	Lot #: Hg3-151-6
6	0.20ug	0.50ml		40	40	Standard #3 (QC #3):
						Lot #: Hg3-157-7
7	QC #2= 0.08ug	0.2ml #2 std		40	40	
8	QC #3= 0.08ug	0.2ml #3 std		40	40	Curve prepared by: MAR

Initial Review By: MAR Date: 12/18/19 Time: 2:00
Final QC Review By: DKH Date: 12/18/19 Time: 1500
Comments:

A/S	LAB #	Method	Wt (g)/ FV (mL)	Prep Aliquot Used, mL	Aliquot or Calc Mass	FV, mL or "1" for conc.	Comments
9	33393-18 QC	7470A			0.1	3	TV=5.3
10	L/L	↓			1	1	=0.008
11	34026 LR3 FH	M29			4	100	
12	-LR3 FH+				1.6		
13	-1 FH				4		
14	-2 FH						
15	-2 FH D						
16	-3 FH						
17	-3 FH+						
18	-4 FH						
19	-18				1	500	

NOTES: Lab blanks and spikes must be prepared with each batch digestion

"+" Denotes spike for Hg, Use calibration working 0.4ug/ml standard at the rate of 0.20ml per 40ml sample, unless otherwise noted.

Digestion chemicals to be added in order at the following rate per 40ml volumes.

H_2SO_4 @ 2.0ml..... HNO_3 @ 1.0ml..... $KMnO_4$ @ 6.0ml..... Persulfate @ 3.2ml

H_2SO_4 Lot # 38113 Millipore *HNO_3 Lot #* 1118120 Fisher *HCl Lot #:* 4118110 Fisher

Persulfate Lot # Hg3-142-8 *$KMnO_4$ Lot #* Hg3-147-7 *Hydrox Lot#:* Hg3-147-8

Clear samples after digestion with 2.4 ml of Hydroxylamine solution.

Element One, Inc F209 R9 Page 1 of 3

elementOne **MERCURY BATCH DIGESTION - RUN WORKSHEET**

SIF File #: 121819-1

A/S	LAB #	Method	Wt (g)/ FV (mL)	Prep Aliquot Used, mL	Aliquot or Calc Mass	FV, mL or "1" for conc.	Comments
20	34026-2B	M29			1	500	
21	-2BP						
22	-3B						
23	-3B+						
24	-1C				4	400	
25	-2C						
26	-2CP						
27	-3C						
28	-3C+						
29	-4C						
30	~~34027-030 Blk~~ [illegible]	7470A			20	1	34027-030 Blk
31	34027-030 Blk +						
32	34027-1						
33	-2						
34	-2 Dup						
35	-3						
36	-3+						
37	-4						
38	-5						
39	-6						
40	-7						
41	-8						
42	-9						
43	-10						
44	34028-1 [illegible]						~~[illegible]~~ [illegible] 12/19/19
45	34028-2						
46	-2 Dup						
47	-3						
48	-3+						
49	-4						
50	-5						
51	-6						
52	-7						
53	-8						
54	-9						

Element One, Inc F209 R9

Page 2 of 3

elementOne **MERCURY BATCH DIGESTION - RUN WORKSHEET**

SIF File #: 12-[illegible]/9-1

A/S	LAB #	Method	Wt (g)/ FV (mL)	Prep Aliquot Used, mL	Aliquot or Calc Mass	FV, mL or "1" for conc.	Comments
55	34021-10	[illegible]			20	1	
56	34029	↓			↓	↓	
57	34029 A						
58	34070						
59	34070 Dup	↓			↓	↓	
60							
61							
62							
63							
64							
65							
66							
67							
68							
69							
70							
71							
72							
73							
74							
75							
76							
77							
78							
79							
80							
81							
82							
83							
84							
85							
86							
87							
88							
89							

Sample_ID	Date	Time	Mean_Sig	Mean_Rd	Mean_Rt	Units	Alq.	Vol.	Sig 1	Reading-1	Result-1	Sig 2	Reading-2	Result-2	Cor. Coeff.
Calib Blank	12/17/2019	8:32:32 AM	0.00015577			µg			0.00015965			0.00015189			
STD1 = .004ug	12/17/2019	8:34:13 AM	0.00059386			µg			0.00060404			0.00058369			
STD2 = .04ug	12/17/2019	8:35:56 AM	0.00458427			µg			0.00458848			0.00458006			
STD3 = .08ug	12/17/2019	8:37:39 AM	0.00941504			µg			0.00934971			0.00948037			
STD4 = .16ug	12/17/2019	8:39:33 AM	0.01905669			µg			0.01906768			0.0190457			
STD5 = .2ug	12/17/2019	8:41:26 AM	0.02403633			µg			0.02411755			0.0239551			
Reagent Blank	12/17/2019	8:43:18 AM	1.61E-05	0.00013496	0.00013496	µg			2.39E-05	0.00019962	0.00019962	8.40E-06	7.03E-05	7.03E-05	
0.004ug = DL	12/17/2019	8:48:25 AM	0.00054094	0.0045272	0.0045272	µg			0.00054614	0.00457072	0.00457072	0.00053574	0.00448369	0.00448369	0.999875288
0.080ug = QC STD 3	12/17/2019	8:50:07 AM	0.00942952	0.07891733	0.07891733	µg			0.00942634	0.0788907	0.0788907	0.0094327	0.07894396	0.07894396	0.999875288
0.080ug = QC STD 2	12/17/2019	8:52:01 AM	0.00936145	0.07834766	0.07834766	µg			0.00931781	0.07798246	0.07798246	0.00940509	0.07871286	0.07871286	0.999875288
Reagent Blank	12/17/2019	8:53:53 AM	-1.77E-05	-0.0001483	-0.0001483	µg			-2.00E-05	-0.0001673	-0.0001673	-1.55E-05	-0.0001293	-0.0001293	0.999875288
34026-1 BH	12/17/2019	9:04:25 AM	0.01508499	0.12611403	10.0891221	µg	4	320	0.01511727	0.12638419	10.1107356	0.01505271	0.12584386	10.0675086	0.999875288
34026-2 BH	12/17/2019	9:06:19 AM	0.01438447	0.12025125	10.2213566	µg	4	340	0.01442594	0.12059833	10.2508584	0.014343	0.11990417	10.1918547	0.999875288
34026-2 BH DUP	12/17/2019	9:08:11 AM	0.01432982	0.11979389	10.1824804	µg	4	340	0.01428802	0.11944407	10.1527464	0.01437162	0.1201437	10.2122145	0.999875288
34026-3 BH	12/17/2019	9:10:04 AM	0.01705691	0.14261736	11.5876607	µg	4	325	0.0170628	0.14266665	11.5916656	0.01705102	0.14256807	11.5836557	0.999875288
34026-3 BH SPK	12/17/2019	9:11:56 AM	0.02652331	0.22184339	18.0247751	µg	4	325	0.02674052	0.22366124	18.1724759	0.0263061	0.22002553	17.8770742	0.999875288
0.004ug = DL	12/17/2019	9:13:49 AM	0.00053623	0.00448784	0.00448784	µg			0.00057291	0.00479479	0.00479479	0.00049956	0.00418089	0.00418089	0.999875288
0.080ug = QC STD 2	12/17/2019	9:15:31 AM	0.00958549	0.08022271	0.08022271	µg			0.00944477	0.07904501	0.07904501	0.00972621	0.08140041	0.08140041	0.999875288
Reagent Blank	12/17/2019	9:17:23 AM	-5.58E-06	-4.67E-05	-4.67E-05	µg			5.35E-06	4.48E-05	4.48E-05	-1.65E-05	-0.0001382	-0.0001382	0.999875288
Calib Blank	12/17/2019	9:42:01 AM	0.00016773			µg			0.00016692			0.00016853			
STD1 = .004ug	12/17/2019	9:43:43 AM	0.00059804			µg			0.00059383			0.00060226			
STD2 = .04ug	12/17/2019	9:45:25 AM	0.00477075			µg			0.00477161			0.00476989			
STD3 = .08ug	12/17/2019	9:47:08 AM	0.00972154			µg			0.00985932			0.00958375			
STD4 = .16ug	12/17/2019	9:49:03 AM	0.01977388			µg			0.01975411			0.01979364			
STD5 = .2ug	12/17/2019	9:50:56 AM	0.0240046			µg			0.02406405			0.02394514			
Reagent Blank	12/17/2019	9:52:49 AM	0.00010078	0.00083013	0.00083013	µg			8.96E-05	0.00073779	0.00073779	0.00011199	0.00092246	0.00092246	
0.004ug = DL	12/17/2019	9:54:30 AM	0.00055715	0.00458914	0.00458914	µg			0.00057299	0.00471957	0.00471957	0.00054132	0.00445872	0.00445872	0.999723303
0.080ug = QC STD 2	12/17/2019	9:56:12 AM	0.00960307	0.07909826	0.07909826	µg			0.00973118	0.08015346	0.08015346	0.00947496	0.07804306	0.07804306	0.999723303
Reagent Blank	12/17/2019	9:58:04 AM	0.00012067	0.0009939	0.0009939	µg			0.00012903	0.00106279	0.00106279	0.0001123	0.00092501	0.00092501	0.999723303
34026-4 BH	12/17/2019	9:59:46 AM	7.55E-05	-0.000208	-0.0101393	µg	4	195	8.08E-05	-0.0001648	-0.0080326	7.03E-05	-0.0002512	-0.012246	0.999723303
34026-1 A	12/17/2019	10:01:29 AM	0.00029154	0.00157126	0.07856287	µg	4	200	0.00028375	0.00150703	0.07535138	0.00029934	0.00163549	0.08177436	0.999723303
34026-2 A	12/17/2019	10:03:11 AM	0.00029531	0.00160225	0.08011237	µg	4	200	0.00031388	0.00175523	0.08776165	0.00027673	0.00144926	0.07246309	0.999723303
34026-2 A DUP	12/17/2019	10:04:54 AM	0.0003174	0.00178419	0.08920952	µg	4	200	0.00032419	0.00184012	0.09200582	0.00031061	0.00172826	0.08641322	0.999723303
34026-3 A	12/17/2019	10:06:37 AM	0.00103558	0.00769974	0.38498681	µg	4	200	0.00107014	0.00798435	0.39921739	0.00100103	0.00741512	0.37075623	0.999723303
34026-3 A SPK	12/17/2019	10:08:21 AM	0.01067025	0.08705825	4.35291268	µg	4	200	0.01067049	0.08706023	4.35301158	0.01067001	0.08705628	4.35281379	0.999723303
34026-4 A	12/17/2019	10:10:15 AM	-7.41E-05	-0.0014403	-0.0720125	µg	4	200	-6.99E-05	-0.0014063	-0.0703142	-7.82E-05	-0.0014742	-0.0737109	0.999723303
0.004ug = DL	12/17/2019	10:17:39 AM	0.0005418	0.00446265	0.00446265	µg			0.0005238	0.00431443	0.00431443	0.00055979	0.00461087	0.00461087	0.999723303
0.080ug = QC STD 2	12/17/2019	10:19:21 AM	0.00996216	0.08205606	0.08205606	µg			0.00998997	0.08228512	0.08228512	0.00993435	0.081827	0.081827	0.999723303
Reagent Blank	12/17/2019	10:21:14 AM	6.41E-05	0.000528	0.000528	µg			5.26E-05	0.00043356	0.00043356	7.56E-05	0.00062244	0.00062244	0.999723303
34026-4 B	12/17/2019	10:26:41 AM	-1.45E-05	-0.0009497	-0.1187093	µg	4	500	-7.02E-06	-0.0008879	-0.1109887	-2.20E-05	-0.0010114	-0.12643	0.999723303
0.004ug = DL	12/17/2019	10:31:59 AM	0.00053079	0.00437198	0.00437198	µg			0.00053814	0.00443253	0.00443253	0.00052344	0.00431143	0.00431143	0.999723303
0.080ug = QC STD 3	12/17/2019	10:33:41 AM	0.00996961	0.08211743	0.08211743	µg			0.01002815	0.08259959	0.08259959	0.00991108	0.08163527	0.08163527	0.999723303
Reagent Blank	12/17/2019	10:35:34 AM	7.43E-05	0.00061229	0.00061229	µg			6.81E-05	0.00056109	0.00056109	8.06E-05	0.00066349	0.00066349	0.999723303
Calib Blank	12/18/2019	9:17:47 AM	9.39E-05			µg			9.36E-05			9.43E-05			
STD1 = .004ug	12/18/2019	9:19:29 AM	0.00042956			µg			0.00043065			0.00042846			
STD2 = .04ug	12/18/2019	9:21:11 AM	0.00454559			µg			0.00459494			0.00449624			
STD3 = .08ug	12/18/2019	9:22:54 AM	0.00919319			µg			0.00924555			0.00914083			
STD4 = .16ug	12/18/2019	9:24:49 AM	0.01879992			µg			0.0189007			0.01869914			
STD5 = .2ug	12/18/2019	9:26:42 AM	0.0237599			µg			0.02387101			0.02364878			
Reagent Blank	12/18/2019	9:28:34 AM	-6.44E-06	-5.46E-05	-5.46E-05	µg			1.26E-06	1.06E-05	1.06E-05	-1.41E-05	-0.0001199	-0.0001199	
0.004ug = DL	12/18/2019	9:30:16 AM	0.00042836	0.00363293	0.00363293	µg			0.00041536	0.00352275	0.00352275	0.00044135	0.00374311	0.00374311	0.999832936
0.080ug = QC STD 3	12/18/2019	9:31:58 AM	0.00926059	0.07853988	0.07853988	µg			0.00925338	0.07847871	0.07847871	0.0092678	0.07860105	0.07860105	0.999832936
0.080ug = QC STD 2	12/18/2019	9:33:52 AM	0.00967686	0.08207032	0.08207032	µg			0.00960941	0.08149826	0.08149826	0.00974431	0.08264238	0.08264238	0.999832936
Reagent Blank	12/18/2019	9:35:44 AM	-1.30E-05	-0.0001105	-0.0001105	µg			-2.02E-05	-0.0001712	-0.0001712	-5.87E-06	-4.98E-05	-4.98E-05	0.999832936
Reagent Blank	12/18/2019	11:39:28 AM	-9.84E-06	-8.35E-05	-8.35E-05	µg			1.31E-05	0.00011109	0.00011109	-3.28E-05	-0.0002781	-0.0002781	
0.004ug = DL	12/18/2019	11:41:10 AM	0.0005313	0.00450599	0.00450599	µg			0.00052927	0.0044888	0.0044888	0.00053333	0.00452318	0.00452318	0.999832936
0.080ug = QC STD 3	12/18/2019	11:42:52 AM	0.01007941	0.08548439	0.08548439	µg			0.01012196	0.0858452	0.0858452	0.01003687	0.08512359	0.08512359	0.999832936
0.080ug = QC STD 2	12/18/2019	11:48:30 AM	0.00981602	0.08325056	0.08325056	µg			0.00983456	0.08340774	0.08340774	0.00979749	0.08309338	0.08309338	0.999832936
Reagent Blank	12/18/2019	11:50:22 AM	3.89E-05	0.00033012	0.00033012	µg			4.86E-05	0.0004124	0.0004124	2.92E-05	0.00024785	0.00024785	0.999832936
34026 LRB FH	12/18/2019	11:55:42 AM	2.50E-05	0.00029527	0.00738164	µg	4	100	2.62E-05	0.00030596	0.00764902	2.37E-05	0.00028457	0.00711426	0.999832936
34026 LRB FH SPK	12/18/2019	11:57:26 AM	0.00792068	0.06725951	4.20371933	µg	1.6	100	0.00795125	0.06751878	4.21992351	0.00789011	0.06700024	4.18751515	0.999832936
34026-1 FH	12/18/2019	11:59:10 AM	3.60E-05	0.0003889	0.00972252	µg	4	100	4.60E-05	0.0004737	0.01184246	2.60E-05	0.0003041	0.00760258	0.999832936
34026-2 FH	12/18/2019	12:00:53 PM	1.84E-06	9.91E-05	0.00247752	µg	4	100	-2.52E-05	-0.0001303	-0.0032564	2.89E-05	0.00032846	0.00821142	0.999832936
34026-2 FH DUP	12/18/2019	12:02:35 PM	3.82E-05	0.00040731	0.01018269	µg	4	100	4.06E-05	0.00042794	0.01069852	3.57E-05	0.00038667	0.00966687	0.999832936
34026-3 FH	12/18/2019	12:04:17 PM	-7.52E-05	-0.0005543	-0.0138577	µg	4	100	-8.23E-05	-0.0006142	-0.0153541	-6.81E-05	-0.0004944	-0.0123612	0.999832936
34026-3 FH SPK	12/18/2019	12:05:58 PM	0.01061727	0.09012949	2.25323736	µg	4	100	0.01067849	0.09064869	2.26621736	0.01055605	0.08961029	2.24025737	0.999832936
34026-4 FH	12/18/2019	12:07:51 PM	2.85E-05	0.00032532	0.00813301	µg	4	100	3.05E-05	0.00034179	0.00854474	2.66E-05	0.00030885	0.00772127	0.999832936
0.004ug = DL	12/18/2019	12:09:32 PM	0.00049224	0.00417473	0.00417473	µg			0.00050466	0.00428011	0.00428011	0.00047982	0.00406936	0.00406936	0.999832936
0.080ug = QC STD 2	12/18/2019	12:11:14 PM	0.01008865	0.08556271	0.08556271	µg			0.01004477	0.08519055	0.08519055	0.01013253	0.08593487	0.08593487	0.999832936
Reagent Blank	12/18/2019	12:13:06 PM	1.93E-06	1.64E-05	1.64E-05	µg			1.42E-05	0.00012065	0.00012065	-1.04E-05	-8.78E-05	-8.78E-05	0.999832936
34026-1 B	12/18/2019	12:14:48 PM	0.01104307	0.09374073	46.8703628	µg	1	500	0.01112202	0.09441027	47.2051362	0.01096412	0.09307118	46.5355894	0.999832936
34026-2 B	12/18/2019	12:16:41 PM	0.01165834	0.09895893	49.4794651	µg	1	500	0.01166459	0.09901186	49.5059284	0.0116521	0.098906	49.4530018	0.999832936
34026-2 B DUP	12/18/2019	12:18:35 PM	0.01153534	0.09791569	48.957843	µg	1	500	0.01155383	0.09807249	49.0362466	0.01151685	0.09775888	48.8794394	0.999832936
34026-3 B	12/18/2019	12:20:29 PM	0.01255806	0.10658947	53.2947327	µg	1	500	0.01266377	0.10748601	53.7430056	0.01245235	0.10569292	52.8464598	0.999832936
34026-3 B SPK	12/18/2019	12:22:23 PM	0.0229535	0.19475414	97.3770722	µg	1	500	0.02307017	0.19574359	97.871794	0.02283684	0.1937647	96.8823504	0.999832936
34026-1 C	12/18/2019	12:24:18 PM	0.00181251	0.01545556	1.54555607	µg	4	400	0.00181345	0.01546349	1.54634918	0.00181158	0.01544763	1.54476296	0.999832936
34026-2 C	12/18/2019	12:26:02 PM	0.00309413	0.02632505	2.63250508	µg	4	400	0.00310421	0.02641055	2.64105504	0.00308405	0.02623955	2.62395513	0.999832936
34026-2 C DUP	12/18/2019	12:27:46 PM	0.00307031	0.02612305	2.61230468	µg	4	400	0.00306431	0.0260722	2.60721986	0.0030763	0.02617389	2.6173895	0.999832936
0.004ug = DL	12/18/2019	12:32:52 PM	0.00051054	0.00432993	0.00432993	µg			0.00051667	0.00438195	0.00438195	0.00050441	0.0042779	0.0042779	0.999832936
0.080ug = QC STD 2	12/18/2019	12:34:35 PM	0.01022299	0.08670207	0.08670207	µg			0.01024529	0.08689118	0.08689118	0.01020069	0.08651296	0.08651296	0.999832936
Reagent Blank	12/18/2019	12:36:27 PM	-1.85E-06	-1.57E-05	-1.57E-05	µg			9.80E-06	8.31E-05	8.31E-05	-1.35E-05	-0.0001145	-0.0001145	0.999832936
34026-4 C	12/18/2019	12:38:09 PM	-4.12E-06	4.86E-05	0.00485573	µg	4	400	3.35E-06	0.00011186	0.0111857	-1.16E-05	-1.47E-05	-0.0014742	0.999832936
34026-3 C	12/18/2019	12:39:51 PM	0.00482597	0.041013	4.10130008	µg	4	400	0.00481856	0.04095015	4.09501506	0.00483339	0.04107585	4.10758511	0.999832936
34026-3 C SPK	12/18/2019	12:41:34 PM	0.01511378	0.12826478	12.826478	µg	4	400	0.0149771	0.12710557	12.7105574	0.01525046	0.12942399	12.9423985	0.999832936
0.004ug = DL	12/18/2019	12:55:50 PM	0.00051721	0.00438648	0.00438648	µg			0.00050469	0.00428033	0.00428033	0.00052972	0.00449262	0.00449262	0.999832936
0.080ug = QC STD 2	12/18/2019	12:57:32 PM	0.01031659	0.08749594	0.08749594	µg			0.01034588	0.08774433	0.08774433	0.01028731	0.08724756	0.08724756	0.999832936
Reagent Blank	12/18/2019	12:59:24 PM	-1.00E-05	-8.49E-05	-8.49E-05	µg			-2.25E-05	-0.0001906	-0.0001906	2.44E-06	2.07E-05	2.07E-05	0.999832936

Pace Analytical Services, LLC
1241 Bellevue Street - Suite 9
Green Bay, WI 54302
(920)469-2436

December 20, 2019

Julie Maas
NEW Water
2231 N Quincy
Green Bay, WI 54302

RE: Project: DEC 2019 Hg STACK TEST
Pace Project No.: 40200724

Dear Julie Maas:
Enclosed are the analytical results for sample(s) received by the laboratory on December 13, 2019. The results relate only to the samples included in this report. Results reported herein conform to the most current, applicable TNI/NELAC standards and the laboratory's Quality Assurance Manual, where applicable, unless otherwise noted in the body of the report.

If you have any questions concerning this report, please feel free to contact me.

Sincerely,

Steven Mleczko
steve.mleczko@pacelabs.com
(920)469-2436
Project Manager

Enclosures

REPORT OF LABORATORY ANALYSIS

This report shall not be reproduced, except in full,
without the written consent of Pace Analytical Services, LLC.

ED_012958_00010468-00066

Pace Analytical Services, LLC
1241 Bellevue Street - Suite 9
Green Bay, WI 54302
(920)469-2436

CERTIFICATIONS

Project: DEC 2019 Hg STACK TEST
Pace Project No.: 40200724

Pace Analytical Services Green Bay
1241 Bellevue Street, Green Bay, WI 54302
Florida/NELAP Certification #: E87948
Illinois Certification #: 200050
Kentucky UST Certification #: 82
Louisiana Certification #: 04168
Minnesota Certification #: 055-999-334
New York Certification #: 12064
North Dakota Certification #: R-150
Virginia VELAP ID: 460263
South Carolina Certification #: 83006001
Texas Certification #: T104704529-14-1
Wisconsin Certification #: 405132750
Wisconsin DATCP Certification #: 105-444
USDA Soil Permit #: P330-16-00157
Federal Fish & Wildlife Permit #: LE51774A-0

This report shall not be reproduced, except in full,
without the written consent of Pace Analytical Services, LLC.

Pace Analytical Services, LLC
1241 Bellevue Street - Suite 9
Green Bay, WI 54302
(920)469-2436

SAMPLE SUMMARY

Project: DEC 2019 Hg STACK TEST
Pace Project No.: 40200724

Lab ID	Sample ID	Matrix	Date Collected	Date Received
40200724001	**RUN 1**	Solid	12/12/19 10:00	12/13/19 08:45
40200724002	**RUN 2**	Solid	12/12/19 13:25	12/13/19 08:45
40200724003	**RUN 3**	Solid	12/12/19 16:50	12/13/19 08:45

This report shall not be reproduced, except in full,
without the written consent of Pace Analytical Services, LLC.

Pace Analytical Services, LLC
1241 Bellevue Street - Suite 9
Green Bay, WI 54302
(920)469-2436

SAMPLE ANALYTE COUNT

Project: DEC 2019 Hg STACK TEST
Pace Project No.: 40200724

Lab ID	Sample ID	Method	Analysts	Analytes Reported
40200724001	**RUN 1**	EPA 7471	AJT	1
		ASTM D2974-87	QJR	1
		EPA 160.4	JXM	1
		SM 2540G	JXM	1
40200724002	**RUN 2**	EPA 7471	AJT	1
		ASTM D2974-87	QJR	1
		EPA 160.4	JXM	1
		SM 2540G	JXM	1
40200724003	**RUN 3**	EPA 7471	AJT	1
		ASTM D2974-87	QJR	1
		EPA 160.4	JXM	1
		SM 2540G	JXM	1

This report shall not be reproduced, except in full,
without the written consent of Pace Analytical Services, LLC.

Pace Analytical Services, LLC
1241 Bellevue Street - Suite 9
Green Bay, WI 54302
(920)469-2436

ANALYTICAL RESULTS

Project: DEC 2019 Hg STACK TEST
Pace Project No.: 40200724

Sample: RUN 1 **Lab ID: 40200724001** Collected: 12/12/19 10:00 Received: 12/13/19 08:45 Matrix: Solid

Results reported on a "dry weight" basis and are adjusted for percent moisture, sample size and any dilutions.

Parameters	Results	Units	LOQ	LOD	DF	Prepared	Analyzed	CAS No.	Qual
7471 Mercury	Analytical Method: EPA 7471 Preparation Method: EPA 7471								
Mercury	**0.23**	mg/kg	0.098	0.029	1	12/16/19 10:05	12/17/19 10:21	7439-97-6	1q,C4
Percent Moisture	Analytical Method: ASTM D2974-87								
Percent Moisture	**65.2**	%	0.10	0.10	1		12/19/19 11:52		
160.4 Total Volatile Solids	Analytical Method: EPA 160.4								
Total Volatile Solids	**69.1**	% (w/w)	0.10	0.10	1		12/17/19 08:43		
2540G Total Percent Solids	Analytical Method: SM 2540G								
Total Solids	**34.9**	%	0.10	0.10	1		12/17/19 10:49		

This report shall not be reproduced, except in full,
without the written consent of Pace Analytical Services, LLC.

Pace Analytical Services, LLC
1241 Bellevue Street - Suite 9
Green Bay, WI 54302
(920)469-2436

ANALYTICAL RESULTS

Project: DEC 2019 Hg STACK TEST
Pace Project No.: 40200724

Sample: RUN 2 **Lab ID: 40200724002** Collected: 12/12/19 13:25 Received: 12/13/19 08:45 Matrix: Solid

Results reported on a "dry weight" basis and are adjusted for percent moisture, sample size and any dilutions.

Parameters	Results	Units	LOQ	LOD	DF	Prepared	Analyzed	CAS No.	Qual
7471 Mercury	Analytical Method: EPA 7471 Preparation Method: EPA 7471								
Mercury	**0.21**	mg/kg	0.084	0.025	1	12/16/19 10:05	12/17/19 10:28	7439-97-6	1q,C4
Percent Moisture	Analytical Method: ASTM D2974-87								
Percent Moisture	**63.7**	%	0.10	0.10	1		12/19/19 11:52		
160.4 Total Volatile Solids	Analytical Method: EPA 160.4								
Total Volatile Solids	**69.3**	% (w/w)	0.10	0.10	1		12/17/19 08:44		
2540G Total Percent Solids	Analytical Method: SM 2540G								
Total Solids	**35.5**	%	0.10	0.10	1		12/17/19 10:49		

This report shall not be reproduced, except in full,
without the written consent of Pace Analytical Services, LLC.

Pace Analytical Services, LLC
1241 Bellevue Street - Suite 9
Green Bay, WI 54302
(920)469-2436

ANALYTICAL RESULTS

Project: DEC 2019 Hg STACK TEST
Pace Project No.: 40200724

Sample: RUN 3 **Lab ID: 40200724003** Collected: 12/12/19 16:50 Received: 12/13/19 08:45 Matrix: Solid

Results reported on a "dry weight" basis and are adjusted for percent moisture, sample size and any dilutions.

Parameters	Results	Units	LOQ	LOD	DF	Prepared	Analyzed	CAS No.	Qual
7471 Mercury	Analytical Method: EPA 7471 Preparation Method: EPA 7471								
Mercury	**0.28**	mg/kg	0.090	0.027	1	12/16/19 10:05	12/17/19 10:31	7439-97-6	1q,C4
Percent Moisture	Analytical Method: ASTM D2974-87								
Percent Moisture	**62.9**	%	0.10	0.10	1		12/19/19 11:52		
160.4 Total Volatile Solids	Analytical Method: EPA 160.4								
Total Volatile Solids	**69.3**	% (w/w)	0.10	0.10	1		12/17/19 08:44		
2540G Total Percent Solids	Analytical Method: SM 2540G								
Total Solids	**36.2**	%	0.10	0.10	1		12/17/19 10:49		

This report shall not be reproduced, except in full,
without the written consent of Pace Analytical Services, LLC.

Pace Analytical Services, LLC
1241 Bellevue Street - Suite 9
Green Bay, WI 54302
(920)469-2436

QUALITY CONTROL DATA

Project: DEC 2019 Hg STACK TEST
Pace Project No.: 40200724

QC Batch: 343458 Analysis Method: EPA 7471
QC Batch Method: EPA 7471 Analysis Description: 7471 Mercury
Associated Lab Samples: 40200724001, 40200724002, 40200724003

METHOD BLANK: 1994298 Matrix: Solid
Associated Lab Samples: 40200724001, 40200724002, 40200724003

Parameter	Units	Blank Result	Reporting Limit	Analyzed	Qualifiers
Mercury	mg/kg	<0.010	0.035	12/17/19 10:10	

LABORATORY CONTROL SAMPLE: 1994299

Parameter	Units	Spike Conc.	LCS Result	LCS % Rec	% Rec Limits	Qualifiers
Mercury	mg/kg	0.83	0.89	107	85-115	

MATRIX SPIKE & MATRIX SPIKE DUPLICATE: 1994300 1994301

Parameter	Units	40200810001 Result	MS Spike Conc.	MSD Spike Conc.	MS Result	MSD Result	MS % Rec	MSD % Rec	% Rec Limits	RPD	Max RPD	Qual
Mercury	mg/kg	<0.010	0.89	0.88	0.96	0.99	108	112	85-115	3	20	

Results presented on this page are in the units indicated by the "Units" column except where an alternate unit is presented to the right of the result.

REPORT OF LABORATORY ANALYSIS

This report shall not be reproduced, except in full,
without the written consent of Pace Analytical Services, LLC.

Pace Analytical Services, LLC
1241 Bellevue Street - Suite 9
Green Bay, WI 54302
(920)469-2436

QUALITY CONTROL DATA

Project: DEC 2019 Hg STACK TEST
Pace Project No.: 40200724

QC Batch: 343896 | Analysis Method: ASTM D2974-87
QC Batch Method: ASTM D2974-87 | Analysis Description: Dry Weight/Percent Moisture
Associated Lab Samples: 40200724001, 40200724002, 40200724003

SAMPLE DUPLICATE: 1996383

Parameter	Units	40200908006 Result	Dup Result	RPD	Max RPD	Qualifiers
Percent Moisture	%	9.7	9.4	3	10	

Results presented on this page are in the units indicated by the "Units" column except where an alternate unit is presented to the right of the result.

REPORT OF LABORATORY ANALYSIS

This report shall not be reproduced, except in full,
without the written consent of Pace Analytical Services, LLC.

ED_012958_00010468-00074

Pace Analytical Services, LLC
1241 Bellevue Street - Suite 9
Green Bay, WI 54302
(920)469-2436

QUALITY CONTROL DATA

Project: DEC 2019 Hg STACK TEST
Pace Project No.: 40200724

QC Batch: 343592 | Analysis Method: EPA 160.4
QC Batch Method: EPA 160.4 | Analysis Description: 160.4 Total Volatile Solids
Associated Lab Samples: 40200724001, 40200724002, 40200724003

METHOD BLANK: 1994842 | Matrix: Solid
Associated Lab Samples: 40200724001, 40200724002, 40200724003

Parameter	Units	Blank Result	Reporting Limit	Analyzed	Qualifiers
Total Volatile Solids	% (w/w)	<30.0	30.0	12/17/19 08:42	

LABORATORY CONTROL SAMPLE: 1994843

Parameter	Units	Spike Conc.	LCS Result	LCS % Rec	% Rec Limits	Qualifiers
Total Volatile Solids	% (w/w)	200	180	90	80-120	

SAMPLE DUPLICATE: 1994844

Parameter	Units	40200724001 Result	Dup Result	RPD	Max RPD	Qualifiers
Total Volatile Solids	% (w/w)	69.1	69.5	1	10	

Results presented on this page are in the units indicated by the "Units" column except where an alternate unit is presented to the right of the result.

This report shall not be reproduced, except in full,
without the written consent of Pace Analytical Services, LLC.

Pace Analytical Services, LLC
1241 Bellevue Street - Suite 9
Green Bay, WI 54302
(920)469-2436

QUALITY CONTROL DATA

Project: DEC 2019 Hg STACK TEST
Pace Project No.: 40200724

QC Batch: 343593 Analysis Method: SM 2540G
QC Batch Method: SM 2540G Analysis Description: 2540G Total Solids
Associated Lab Samples: 40200724001, 40200724002, 40200724003

METHOD BLANK: 1994845 Matrix: Solid
Associated Lab Samples: 40200724001, 40200724002, 40200724003

Parameter	Units	Blank Result	Reporting Limit	Analyzed	Qualifiers
Total Solids	%	<30.0	30.0	12/17/19 10:48	

LABORATORY CONTROL SAMPLE: 1994846

Parameter	Units	Spike Conc.	LCS Result	LCS % Rec	% Rec Limits	Qualifiers
Total Solids	%	767	769	100	80-120	

SAMPLE DUPLICATE: 1994847

Parameter	Units	40200741001 Result	Dup Result	RPD	Max RPD	Qualifiers
Total Solids	%	97.4	97.2	0	10	

Results presented on this page are in the units indicated by the "Units" column except where an alternate unit is presented to the right of the result.

This report shall not be reproduced, except in full,
without the written consent of Pace Analytical Services, LLC.

Pace Analytical Services, LLC
1241 Bellevue Street - Suite 9
Green Bay, WI 54302
(920)469-2436

QUALIFIERS

Project: DEC 2019 Hg STACK TEST
Pace Project No.: 40200724

DEFINITIONS

DF - Dilution Factor, if reported, represents the factor applied to the reported data due to dilution of the sample aliquot.

ND - Not Detected at or above LOD.

J - Estimated concentration at or above the LOD and below the LOQ.

LOD - Limit of Detection adjusted for dilution factor, percent moisture, initial weight and final volume.

LOQ - Limit of Quantitation adjusted for dilution factor, percent moisture, initial weight and final volume.

S - Surrogate

1,2-Diphenylhydrazine decomposes to and cannot be separated from Azobenzene using Method 8270. The result for each analyte is a combined concentration.

Consistent with EPA guidelines, unrounded data are displayed and have been used to calculate % recovery and RPD values.

LCS(D) - Laboratory Control Sample (Duplicate)

MS(D) - Matrix Spike (Duplicate)

DUP - Sample Duplicate

RPD - Relative Percent Difference

NC - Not Calculable.

SG - Silica Gel - Clean-Up

U - Indicates the compound was analyzed for, but not detected at or above the adjusted LOD.

N-Nitrosodiphenylamine decomposes and cannot be separated from Diphenylamine using Method 8270. The result reported for each analyte is a combined concentration.

Pace Analytical is TNI accredited. Contact your Pace PM for the current list of accredited analytes.

TNI - The NELAC Institute.

ANALYTE QUALIFIERS

1q	Analyte was detected in the associated method blank at a concentration of -0.012 mg/kg.
C4	Sample container did not meet EPA or method requirements.

This report shall not be reproduced, except in full,
without the written consent of Pace Analytical Services, LLC.

Pace Analytical Services, LLC
1241 Bellevue Street - Suite 9
Green Bay, WI 54302
(920)469-2436

QUALITY CONTROL DATA CROSS REFERENCE TABLE

Project: DEC 2019 Hg STACK TEST
Pace Project No.: 40200724

Lab ID	Sample ID	QC Batch Method	QC Batch	Analytical Method	Analytical Batch
40200724001	**RUN 1**	EPA 7471	343458	EPA 7471	343536
40200724002	**RUN 2**	EPA 7471	343458	EPA 7471	343536
40200724003	**RUN 3**	EPA 7471	343458	EPA 7471	343536
40200724001	**RUN 1**	ASTM D2974-87	343896		
40200724002	**RUN 2**	ASTM D2974-87	343896		
40200724003	**RUN 3**	ASTM D2974-87	343896		
40200724001	**RUN 1**	EPA 160.4	343592		
40200724002	**RUN 2**	EPA 160.4	343592		
40200724003	**RUN 3**	EPA 160.4	343592		
40200724001	**RUN 1**	SM 2540G	343593		
40200724002	**RUN 2**	SM 2540G	343593		
40200724003	**RUN 3**	SM 2540G	343593		

This report shall not be reproduced, except in full,
without the written consent of Pace Analytical Services, LLC.

(Please Print Clearly)

Company Name:	GBMSD
Branch/Location:	—
Project Contact:	Julie Maas
Phone:	920-438-1045
Project Number:	—
Project Name:	Dec 2019 Hg Stack Test
Project State:	WI
Sampled By (Print):	Sonny Xiong
Sampled By (Sign):	[signature]
PO #:	
Regulatory Program:	

Pace Analytical®
www.pacelabs.com

UPPER MIDWEST REGION
MN: 612-607-1700 WI: 920-469-2436

Page 1 of 1

40200724

CHAIN OF CUSTODY

*Preservation Codes
A=None B=HCL C=H2SO4 D=HNO3 E=DI Water F=Methanol G=NaOH
H=Sodium Bisulfate Solution I=Sodium Thiosulfate J=Other

Quote #:	
Mail To Contact:	Julie Maas
Mail To Company:	GBMSD
Mail To Address:	2231 N. Quincy Green Bay WI 54302
Invoice To Contact:	Courtney Mueller
Invoice To Company:	GBMSD
Invoice To Address:	2231 N. Quincy Green Bay, WI 54302
Invoice To Phone:	920-438-1065

Data Package Options (billable)
- ☐ EPA Level III
- ☐ EPA Level IV

MS/MSD
- ☐ On your sample (billable)
- ☐ NOT needed on your sample

Matrix Codes
A = Air, B = Biota, C = Charcoal, O = Oil, S = Soil, SI = Sludge, W = Water, DW = Drinking Water, GW = Ground Water, SW = Surface Water, WW = Waste Water, WP = Wipe

PACE LAB #	CLIENT FIELD ID	COLLECTION DATE	COLLECTION TIME	MATRIX	Analyses Requested: Mercury-7471	% Total Solids	% Volatile Solids	CLIENT COMMENTS	LAB COMMENTS (Lab Use Only)	Profile #
					Y/N: N	N	N			
					Pick Letter: A	A	A			
001	Run 1	12-12-19	0700-1000	SI	X	X	X			
002	Run 2	↓	1025-1325	SI	X	X	X			
003	Run 3	↓	1350-1650	SI	X	X	X			

Rush Turnaround Time Requested - Prelims
(Rush TAT subject to approval/surcharge)
Date Needed:

Transmit Prelim Rush Results by (complete what you want):

Email #1:	jmaas@newwater.us
Email #2:	
Telephone:	
Fax:	

Samples on HOLD are subject to special pricing and release of liability

Relinquished By:	Date/Time:	Received By:	Date/Time:
Sonny Xiong	12-12-19 1657 ~~1657~~ SX	Julie C Maas	12/12/19 5:00PM
Julie C. Maas	12-12-19 12/13/19 8:00AM	[signature]	12/13/19 08:15
[signature]	12/13/19 0845	Susan K Wyle Pace	12/13/19 0845

PACE Project No. 40200724

Receipt Temp = ROI °C

Sample Receipt pH OK / Adjusted

Cooler Custody Seal
Present / Not Present
Intact / Not Intact

Version 6.0 06/14/06

C019a(27Jun2006)

ORIGINAL

Pace Analytical Services, LLC
1241 Bellevue Street, Suite 9
Green Bay, WI 54302

Sample Preservation Receipt Form

Client Name: GBMSD

Project # 40200724

All containers needing preservation have been checked and noted below: □Yes □No ☑N/A

Lab Lot# of pH paper:

Lab Std #ID of preservation (if pH adjusted):

Pace Lab #	Glass							Plastic							Vials						Jars			General			VOA Vials (>6mm) *	H2SO4 pH ≤2	NaOH+Zn Act pH ≥9	NaOH pH ≥12	HNO3 pH ≤2	pH after adjusted	Initial when completed:	Date/ Time:	Volume (mL)
	AG1U	AG1H	AG4S	AG4U	AG5U	AG2S	BG3U	BP1U	BP2N	BP2Z	BP3U	BP3B	BP3N	BP3S	DG9A	DG9T	VG9U	VG9H	VG9M	VG9D	JGFU	WGFU	WPFU	SP5T	ZPLC	GN									
001																									✓										2.5 / 5 / 10
002																									✓										2.5 / 5 / 10
003																									✓										2.5 / 5 / 10
004																																			2.5 / 5 / 10
005																																			2.5 / 5 / 10
006																																			2.5 / 5 / 10
007																																			2.5 / 5 / 10
008																																			2.5 / 5 / 10
009																																			2.5 / 5 / 10
010																																			2.5 / 5 / 10
011																																			2.5 / 5 / 10
012																																			2.5 / 5 / 10
013																																			2.5 / 5 / 10
014																																			2.5 / 5 / 10
015																																			2.5 / 5 / 10
016																																			2.5 / 5 / 10
017																																			2.5 / 5 / 10
018																																			2.5 / 5 / 10
019																																			2.5 / 5 / 10
020																																	12/13/18		2.5 / 5 / 10

Exceptions to preservation check: VOA, Coliform, TOC, TOX, TOH, O&G, WI DRO, Phenolics, Other: _____

Headspace in VOA Vials (>6mm) : □Yes □No ☑N/A ***If yes look in headspace column**

AG1U	1 liter amber glass	BP1U	1 liter plastic unpres	DG9A	40 mL amber ascorbic	JGFU	4 oz amber jar unpres
AG1H	1 liter amber glass HCL	BP2N	500 mL plastic HNO3	DG9T	40 mL amber Na Thio	WGFU	4 oz clear jar unpres
AG4S	125 mL amber glass H2SO4	BP2Z	500 mL plastic NaOH, Znact	VG9U	40 mL clear vial unpres	WPFU	4 oz plastic jar unpres
AG4U	120 mL amber glass unpres	BP3U	250 mL plastic unpres	VG9H	40 mL clear vial HCL		
AG5U	100 mL amber glass unpres	BP3B	250 mL plastic NaOH	VG9M	40 mL clear vial MeOH	SP5T	120 mL plastic Na Thiosulfate
AG2S	500 mL amber glass H2SO4	BP3N	250 mL plastic HNO3	VG9D	40 mL clear vial DI	ZPLC	ziploc bag
BG3U	250 mL clear glass unpres	BP3S	250 mL plastic H2SO4			GN:	

Pace Analytical 1241 Bellevue Street, Green Bay, WI 54302	Document Name: Sample Condition Upon Receipt (SCUR)	Document Revised: 25Apr2018
	Document No.: F-GB-C-031-Rev.07	Issuing Authority: Pace Green Bay Quality Office

Sample Condition Upon Receipt Form (SCUR)

Project #: WO#: 40200724

40200724

Client Name: GBMSD

Courier: ☐ CS Logistics ☐ Fed Ex ☐ Speedee ☐ UPS ☐ Waltco
☐ Client ☑ Pace Other: _____

Tracking #: _____

Custody Seal on Cooler/Box Present: ☐ yes ☑ no Seals intact: ☐ yes ☐ no

Custody Seal on Samples Present: ☐ yes ☑ no Seals intact: ☐ yes ☐ no

Packing Material: ☐ Bubble Wrap ☐ Bubble Bags ☑ None ☐ Other _____

Thermometer Used SR - N/A **Type of Ice:** (Wet) Blue Dry None ☑ Samples on ice, cooling process has begun

Cooler Temperature Uncorr: ROI /Corr: _____

Temp Blank Present: ☐ yes ☑ no **Biological Tissue is Frozen:** ☐ yes ☐ no

Temp should be above freezing to 6°C.
Biota Samples may be received at ≤ 0°C.

Person examining contents:
Date: 12-13-19
Initials: SW

Chain of Custody Present:	☑Yes ☐No ☐N/A	1. +COC 12-13-19 SW
Chain of Custody Filled Out:	☑Yes ☐No ☐N/A	2.
Chain of Custody Relinquished:	☑Yes ☐No ☐N/A	3.
Sampler Name & Signature on COC:	☑Yes ☐No ☐N/A	4.
Samples Arrived within Hold Time:	☑Yes ☐No	5.
- VOA Samples frozen upon receipt	☐Yes ☐No	Date/Time:
Short Hold Time Analysis (<72hr):	☐Yes ☑No	6.
Rush Turn Around Time Requested:	☐Yes ☑No	7.
Sufficient Volume: For Analysis: ☑Yes ☐No MS/MSD:	☐Yes ☑No ☐N/A	8.
Correct Containers Used:	☑Yes ☐No	9.
-Pace Containers Used:	☐Yes ☑No ☐N/A	
-Pace IR Containers Used:	☐Yes ☐No ☑N/A	
Containers Intact:	☑Yes ☐No	10.
Filtered volume received for Dissolved tests	☐Yes ☐No ☑N/A	11.
Sample Labels match COC:	☑Yes ☐No ☐N/A	12.
-Includes date/time/ID/Analysis Matrix: S		
Trip Blank Present:	☐Yes ☐No ☑N/A	13.
Trip Blank Custody Seals Present	☐Yes ☐No ☑N/A	
Pace Trip Blank Lot # (if purchased): _____		

Client Notification/ Resolution: If checked, see attached form for additional comments ☐

Person Contacted: _____ Date/Time: _____

Comments/ Resolution: _____

Project Manager Review: _____ **Date:** 12/13/19

ED_012958_00010468-00081

APPENDIX F

CALIBRATION DATA

Advanced Industrial Resources, Inc.

Dry Gas Meter Calibration Data

Dry Gas Meter	
Console ID:	C-10
Serial Number:	

Reference Meter	
Meter ID:	M5RFM1
Calibration Factor, Y_w:	1.0006

Date: 01/04/19 **Performed By:** LS

Barometric Pressure, P_b (in. Hg): 28.67 **Reviewed By:**

Data								
				Temperatures (°F)				Time Elapsed
		Reference	Dry Gas	Reference	Dry Gas Meter			
Vacuum (in. Hg)	ΔH (in. H_2O)	Meter Volume V_w (ft^3)	Meter Volume V_m (ft^3)	Meter t_w	init. t_i	final t_f	avg. t_m	θ (min.)
5.0	0.50	5.103	5.044	63	57.0	58.0	57.5	13.00
5.0	1.00	5.042	5.044	64	59.0	61.0	60.0	9.10
5.0	2.00	5.035	5.065	64	61.0	63.0	62.0	6.25
5.0	3.00	6.029	6.122	65	62.0	64.0	63.0	6.10
5.0	4.00	5.175	5.254	65	64.0	65.0	64.5	4.50

Calculations						
ΔH (inches H_2O)	Y_m (dimensionless)	Variation		$\Delta H_@$ (inches H_2O)	Variation (dimensionless)	
0.50	1.000	0.015	PASS	1.894	0.069	PASS
1.00	0.990	0.005	PASS	1.900	0.074	PASS
2.00	0.986	0.001	PASS	1.790	-0.035	PASS
3.00	0.974	-0.011	PASS	1.787	-0.038	PASS
4.00	0.975	-0.010	PASS	1.755	-0.070	PASS
Averages:	**0.985**	PASS		**1.825**	PASS	

Where:

Y_m is the ratio of the reading of the reference meter to that of the dry gas meter (DGM); variance limit: ±0.02.

$$Y_m = \frac{Y_w V_w P_b (t_m + 460)}{V_m (P_b + \Delta H/13.6)(t_w + 460)}$$

$\Delta H_@$ is the orifice pressure differential (inches H_2O) that corresponds to 0.75 cfm of air at 68 °F and 29.92 inches of mercury; variance limit: ±0.20.

$$\Delta H_@ = \frac{0.0317\, \Delta H\, ((t_w + 460)\quad)^2}{P_b (t_m + 460)(Y_w V_w)^2}$$

EMC Approved Alternative Method (EMC ALT-009)
Alternative Method 5 Post-test Calibration

Console ID: C-10
DGM Y_m: 0.985
Source: S08
Method: 29

Test Date	12/12/19	12/12/19	12/12/19	
Run #	1	2	3	
Y_{qa}	0.980	0.997	0.968	dry gas meter calibration check value, dimensionless.
Test time	180	180	180	total run time, min.
Vm	114.39	111.513	116.475	total sample volume measured by dry gas meter, dcf.
Tm	541	545	544	absolute average dry gas meter temp., BR.
Pb	29.70	29.70	29.70	barometric pressure, in. Hg.
K	0.0319	0.0319	0.0319	(29.92/528)(0.75)2 (in. Hg/B/R) cfm2.
ΔH_{avg}	1.27	1.24	1.27	average orifice meter differential, in. H20.
$\Delta H_{@}$	1.825	1.825	1.825	orifice meter calibration coefficient, in. H2O.
$M_{d\text{-stack gas}}$	30.06	30.05	29.99	dry molecular weight of stack gas, lb/lb-mole.
$M_{d\text{-air}}$	29	29	29	dry molecular weight of air, lb/lb-mole.
Hg_{SG}	13.6	13.6	13.6	specific gravity of mercury.
% diff. from Y_m	0.5%	-1.2%	1.7%	

Average % diff. from Y_m: 0.3%
Calibration check value status: PASS

*Post-test DGM calibration check value (Y_{qa}) must be within ±5% of the specific DGM's established Y_m

Environmental Supply Company, Inc.
Quality Source Sampling Systems & Accessories

15 POINT SECONDARY REFERENCE METER CALIBRATION

Date: 8/15/2019 DGM Model: T-110
Customer: Advanced Industrial Resources DGM S/N: 27979
Reference Prover: Cert.# A-610 Tape # 26727

Pb: 29.89 in Hg

Approx. Flow Rate (cfm) Q	Prover Volume (ft^3) V_w	DGM Volume (ft^3) V_{ds}	Temperature Prover (°F) t_w	Temperature DGM (°F) t_{ds}	Time (min) Φ	Flow Rate (cfm) Q	Meter Coefficient Y_{ds}	Average Meter Coefficient Y_{ds}
0.40	2.000	2.020	76.2	76.2	5.148	0.382	0.990	
0.40	2.000	2.019	76.1	76.1	5.117	0.384	0.991	
0.40	2.000	2.009	76.2	76.2	5.122	0.384	0.996	0.992
0.60	2.000	2.018	76.5	76.5	3.320	0.592	0.991	
0.60	2.000	2.017	75.9	75.9	3.318	0.593	0.992	
0.60	2.000	2.017	75.9	75.9	3.308	0.595	0.992	0.991
0.80	2.000	2.017	75.9	75.9	2.438	0.807	0.992	
0.80	2.000	2.017	76.2	76.2	2.432	0.809	0.992	
0.80	2.000	2.023	75.9	75.9	2.428	0.810	0.989	0.991
1.00	2.000	2.022	76.3	76.3	1.943	1.012	0.989	
1.00	2.000	2.017	75.6	75.6	1.947	1.011	0.992	
1.00	2.000	2.016	76.2	76.2	1.942	1.013	0.992	0.991
1.20	2.000	2.007	75.5	75.5	1.622	1.214	0.997	
1.20	2.000	2.016	75.5	75.5	1.623	1.213	0.992	
1.20	2.000	2.017	75.5	75.5	1.623	1.213	0.992	0.993

AVERAGE Y_{ds} 0.992

$$Y_{ds} = \frac{V_w(t_{ds} + t_{std})}{V_{ds}(t_w + t_{std})} * \frac{P_{bar}}{\left(P_{bar} + P_m/13.6\right)}$$

$$Q = 17.64 \frac{P_{bar}}{(t_w + t_{std})} \frac{V_w}{\Phi}$$

Dry gas meter Serial Number 27979 was calibrated in accordance with the Code of Federal Regulations, Title 40, Part 60, Appendix A, Method 5 Section 16.1.1

Signature

708 E. Club Blvd., Durham, North Carolina 27704 www.environsupply.com 919-956-9688 FAX: 919-682-0333

Environmental Supply Company, Inc.
Quality Source Sampling Systems & Accessories

15 POINT SECONDARY REFERENCE METER CALIBRATION

Date: 8/27/2019 DGM Model: T-110
Customer: Advanced Industrial Resources DGM S/N: 356333
Reference Prover: Cert.# A-610 Tape # 26727

Pb: 29.86 in Hg

Approx. Flow Rate (cfm) Q	Prover Volume (ft^3) V_w	DGM Volume (ft^3) V_{ds}	Temperature Prover (°F) t_w	Temperature DGM (°F) t_{ds}	Time (min) Φ	Flow Rate (cfm) Q	Meter Coefficient Y_{ds}	Average Meter Coefficient Y_{ds}
0.40	2.000	1.998	77.9	75.8	5.092	0.385	0.997	
0.40	2.000	1.997	77.4	75.8	5.088	0.385	0.999	
0.40	2.000	1.998	77.4	75.7	5.097	0.385	0.998	0.998
0.60	2.000	2.004	75.8	75.8	3.290	0.598	0.998	
0.60	2.000	2.003	75.8	75.8	3.288	0.598	0.999	
0.60	2.000	2.003	75.8	75.8	3.285	0.599	0.999	0.998
0.80	2.000	2.006	75.8	75.8	2.453	0.801	0.997	
0.80	2.000	2.007	75.8	75.8	2.442	0.805	0.997	
0.80	2.000	2.001	75.5	75.5	2.440	0.806	1.000	0.998
1.00	2.000	2.001	75.9	75.9	1.918	1.025	1.000	
1.00	2.000	2.006	75.9	75.9	1.925	1.021	0.997	
1.00	2.000	2.010	75.9	75.9	1.928	1.019	0.995	0.997
1.20	2.000	2.007	75.9	75.9	1.595	1.232	0.997	
1.20	2.000	2.006	75.9	75.9	1.597	1.231	0.997	
1.20	2.000	2.006	75.9	75.9	1.588	1.238	0.997	0.997

AVERAGE Y_{ds} **0.998**

$$Y_{ds} = \frac{V_w(t_{ds} + t_{std})}{V_{ds}(t_w + t_{std})} * \frac{P_{bar}}{\left(P_{bar} + P_m/13.6\right)}$$

$$Q = 17.64 \frac{P_{bar}}{(t_w + t_{std})} \frac{V_w}{\Phi}$$

Dry gas meter Serial Number 356333 was calibrated in accordance with the Code of Federal Regulations, Title 40, Part 60, Appendix A, Method 5 Section 16.1.1

Signature

708 E. Club Blvd., Durham, North Carolina 27704 www.environsupply.com 919-956-9688 FAX: 919-682-0333

Calibration Date: 10-10-2017

Calibration Technician: EW

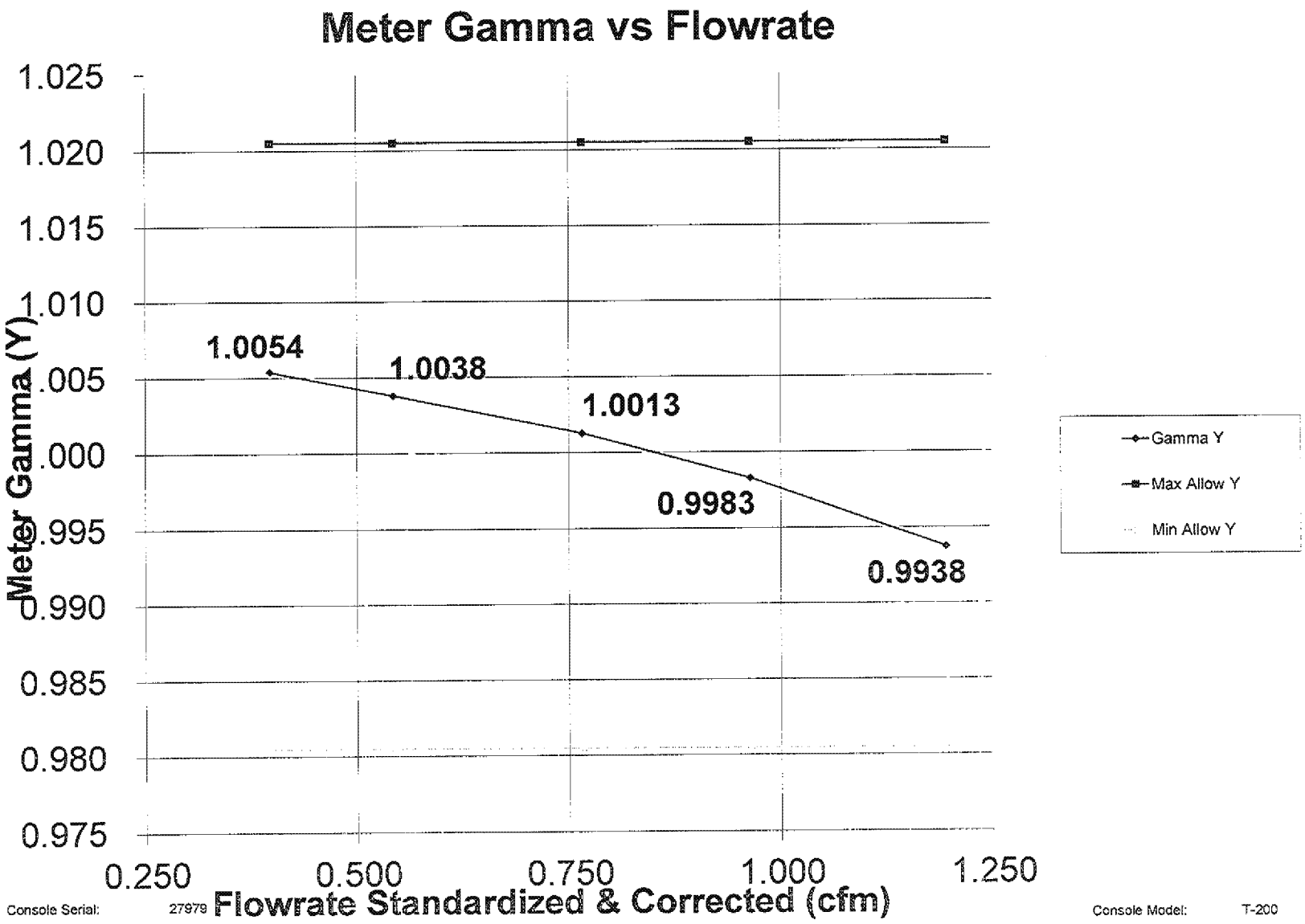

Console Serial: 27979

Console Model: T-200

Calibration Date: 10-10-2017

Calibration Technician: EW

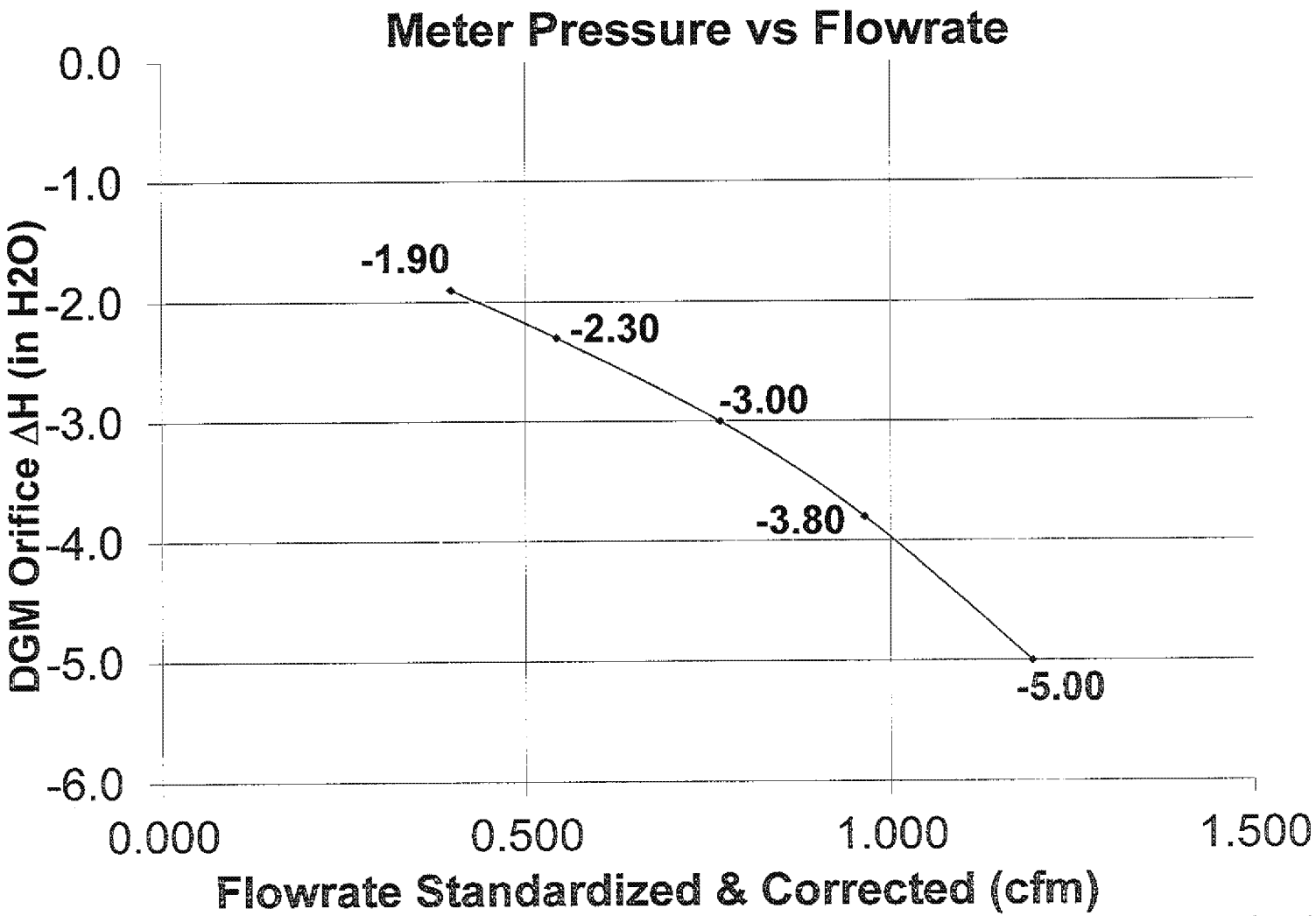

Console Serial: 27979

Console Model: T-200

Advanced Industrial Resources, Inc.

Thermocouple Calibration Data

Thermometer ID: RT-01 ; RT-03 **Date:** 12/20/19

Bias: 0 **Performed By:** JG

Apparatus ID	Apparatus Description	Reference Temperature Reading		Indicated Temperature		Relative Variation
		°F	°R	°F	°R	%
P4-01	Stack Temp.	32	492	33	493	0.2
P4-01	Stack Temp.	210	670	211	671	0.1
B-16	Filter Temp.	32	492	32	492	0.0
B-16	Filter Temp.	210	670	210	670	0.0
B-16	Exit Imp. Temp.	32	492	32	492	0.0
B-16	Exit Imp. Temp.	210	670	211	671	0.1
C-010	Meter In Temp.	32	492	33	493	0.2
C-010	Meter In Temp.	210	670	212	672	0.3
C-010	Meter Out Temp.	32	492	32	492	0.0
C-010	Meter Out Temp.	210	670	211	671	0.1
B-16	Filter Exit Temp.	32	492	33	493	0.2
B-16	Filter Exit Temp.	210	670	210	670	0.0
P4-01	Probe Temp.	32	492	33	493	0.2
P4-01	Probe Temp.	210	670	210	670	0.0

Thermocouple Calibration Procedure

A. References

1. Mercury-in-glass refernce thermometer, calibrated against thermometric fixed points.
2. Thermometric fixed points, including ice bath and boiling water (corrected for barometric pressure)

B. Measurement

1. Compare field temperature sensors against the reference thermometer. Agreement must be within ±1.5% of the absolute reference temperature.

VERIFICATION OF CONSTRUCTION SPECIFICATIONS FOR THE TYPE-S PITOT TUBE

Thomas R. Clark, Wade Mason, Paul Reinermann III
PEDCo Environmental, Inc.,
Cincinnati, Ohio

Revisions to EPA Reference Method 2 - Determination of Stack Gas Velocity and Volumetric Flow Rate (Type-S Pitot Tube) - promulgated August 18, 1977, exempted certain pitot tubes from calibration and included appropriate construction criteria and application guidelines.

Figure 1 summarizes procedures for determining the calibration coefficients of Type-S pitot tubes. A pitot tube may be calibrated using procedures outlined in Method 2 or assigned a baseline coefficient (C_p) of 0.84 if it meets the following criteria:

> Pitot tube meets the construction criteria of Figures 2 and 3
>
> The external tubing diameter (D_t) is between 0.48 and 0.95 cm (3/16 and 3/8 in.)
>
> The base-to-opening plane distances (P_A and P_B) are equal and range between 1.05 and 1.50 D_t
>
> The pitot tube is used separately, or in a pitot-probe assembly, mounted in accordance with the specifications in Figures 4 and 5

Pitot tubes that meet the construction criteria of Figures 2 and 3, but do not meet the specified limits for D_t, P_A, and P_B may be used, but must be calibrated.

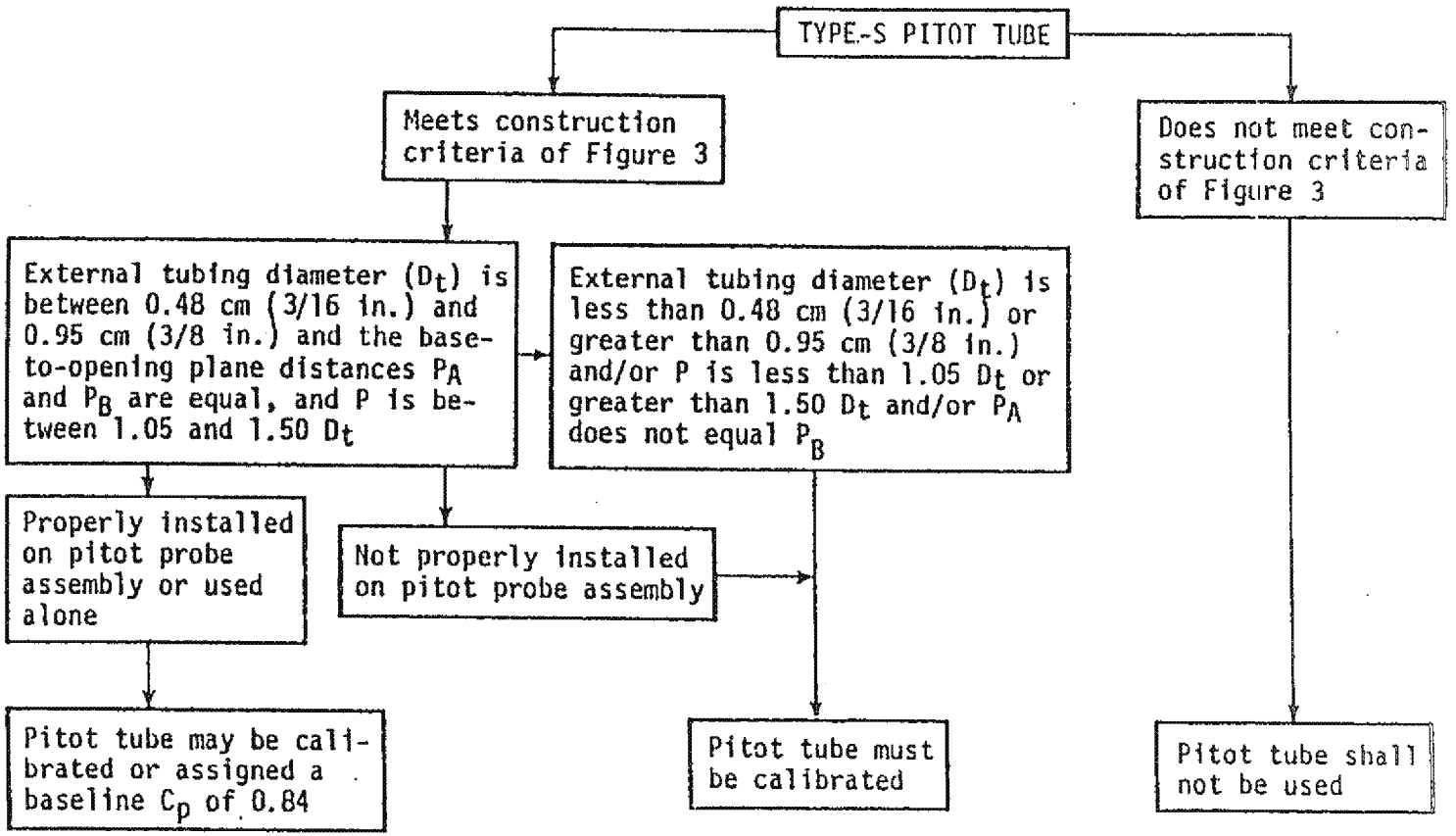

Figure 1. Procedures for determining the calibration coefficients of Type-S pitot tubes.

ED_012958_00010468-00091

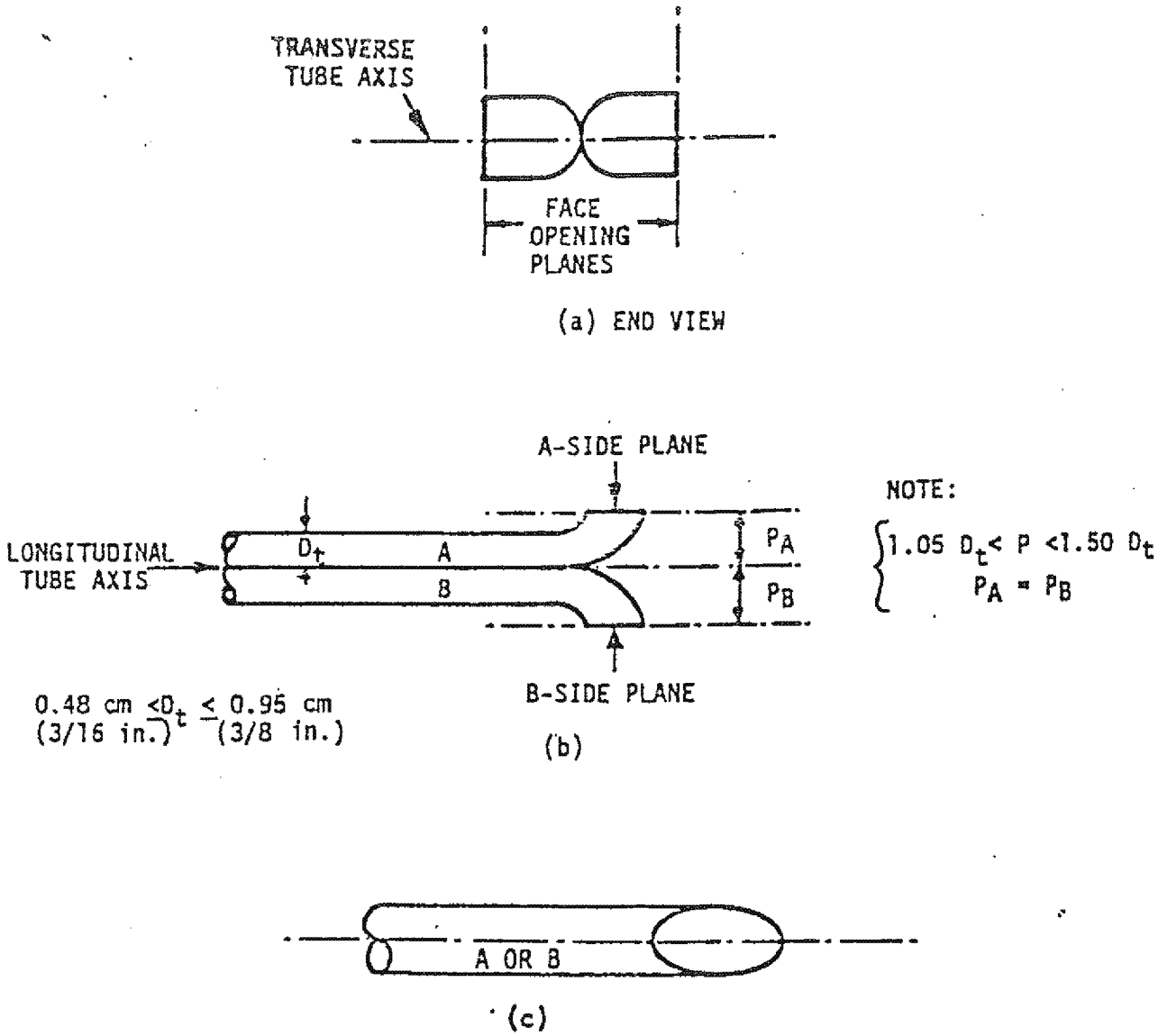

Figure 2. Properly constructed Type-S pitot tube, shown in: (a) end view; face opening planes perpendicular to transverse axis; (b) top view; face opening plans parallel to longitudinal axis; (c) side view; both legs of equal length and centerlines coincident, when viewed from both sides. Baseline coefficient values of 0.84 may be assigned to pitot tubes constructed this way.

ED_012958_00010468-00092

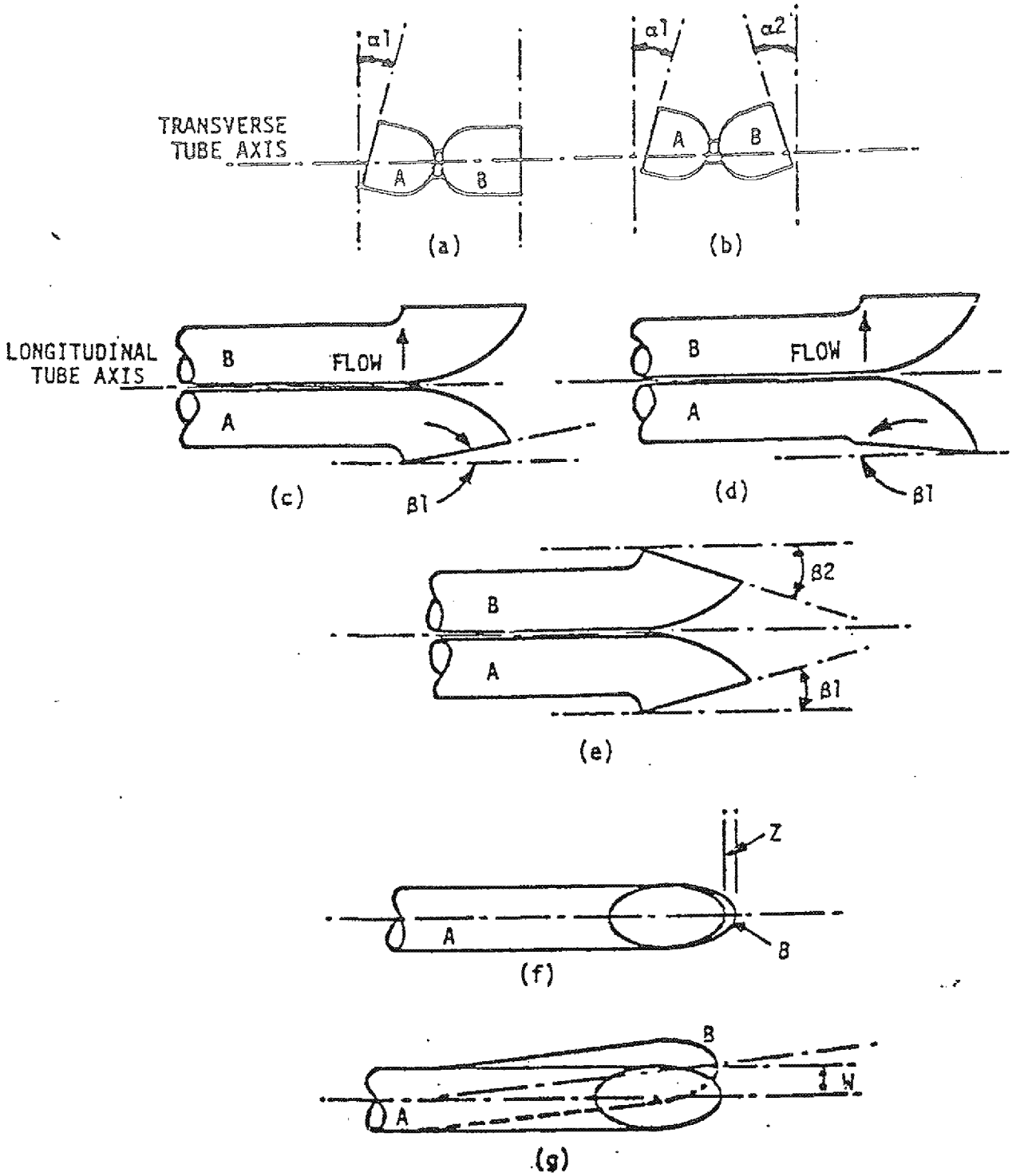

Figure 3. Types of face-opening misalignment that can result from field use or improper construction of Type S pitot tubes. These will not affect Cp as long as a_1 and a_2 <10°, β_2 <5°, z <0.32 cm (1/8 in.) and w <0.08 cm (1/32 in.).

ED_012958_00010468-00093

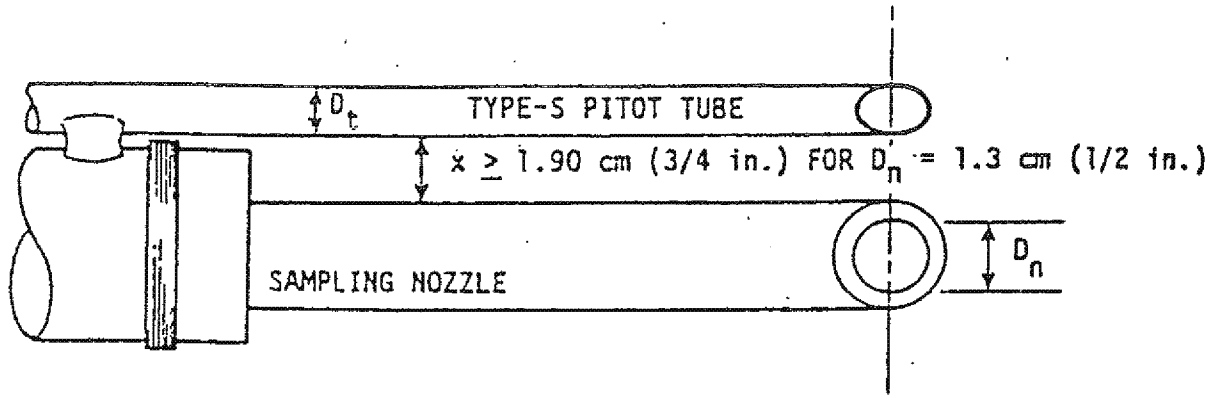

A. BOTTOM VIEW: SHOWING MINIMUM PITOT-NOZZLE SEPARATION.

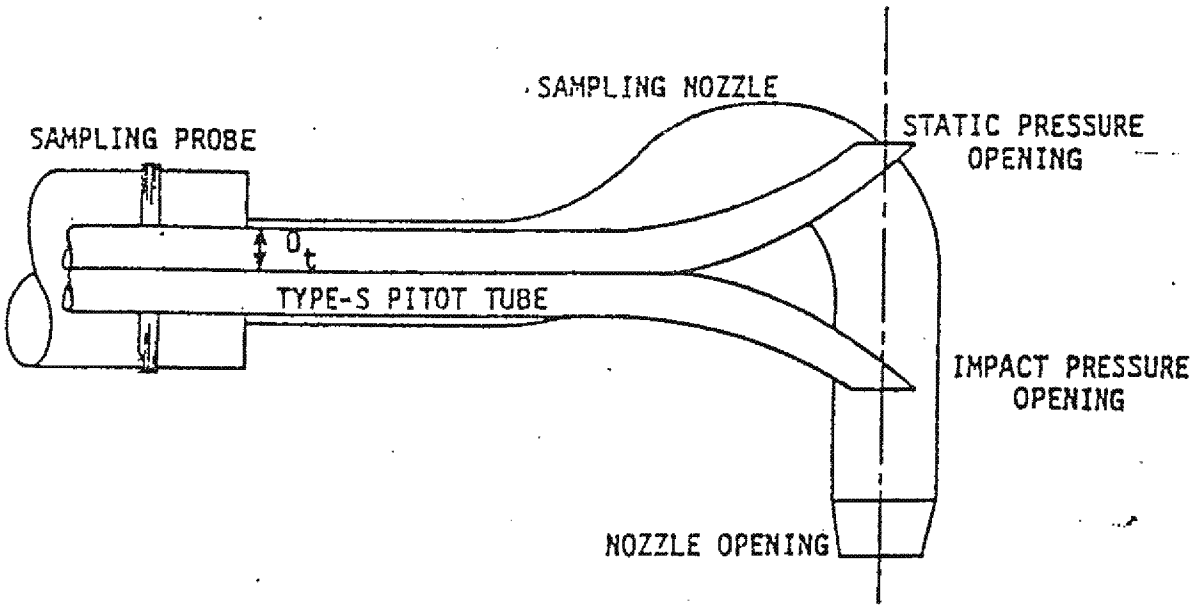

B. SIDE VIEW: TO PREVENT PITOT TUBE FROM INTERFERING WITH GAS FLOW STREAMLINES APPROACHING THE NOZZLE, THE IMPACT PRESSURE OPENING PLANE OF THE PITOT TUBE SHALL BE EVEN WITH OR ABOVE THE NOZZLE ENTRY PLANE.

Figure 4. Required pitot tube - sampling nozzle configuration to prevent aerodynamic interference; buttonhook - type nozzle; centers of nozzle and pitot opening aligned; D_t between 0.48 and 0.95 cm (3/16 and 3/8 in.).

ED_012958_00010468-00094

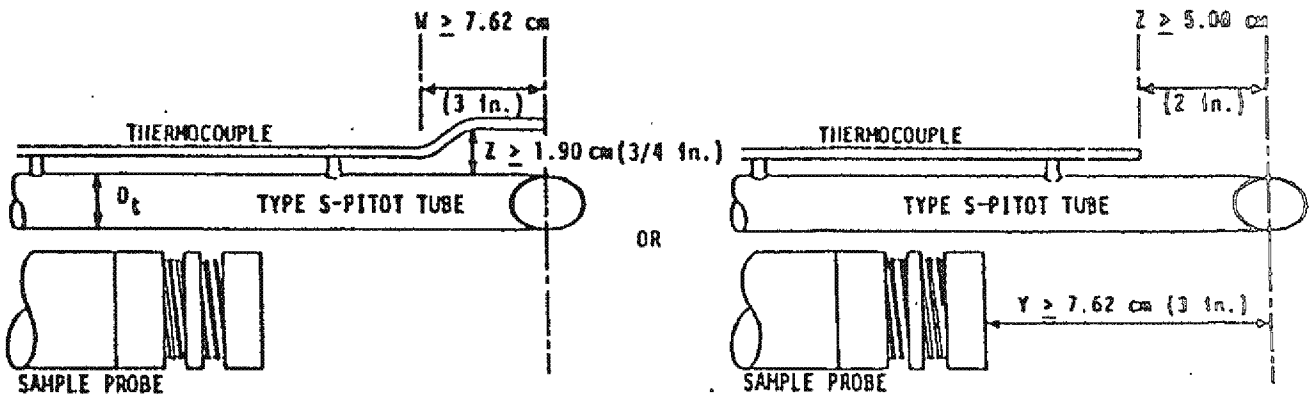

Figure 5. Required thermocouple and probe placement to prevent interference; D_t between 0.48 and 0.95 cm (3/16 and 3/8 in.).

ED_012958_00010468-00095

The EPA has not specified a measurement technique to verify proper construction. The following procedures provide a quick and accurate method of checking construction specifications for Type-S pitot tubes. The apparatus is inexpensive and available in most hardware stores. The method can be used in the laboratory by testers and easily adapted to field use by agency personnel while witnessing tests or performing quality assurance checks.

1. Obtain a section of angle aluminum approximately 20 cm (8 in.) by 1.3 x 2.5 cm (0.5 x 1.0 in.). Mount a bull's-eye level (with ±1 degree accuracy) to the angle aluminum, as shown in Figure 6. After mounting the bull's-eye level to the angle aluminum, level the angle aluminum and place the degree-indicating level in the parallel and perpendicular positions. The indicating level should not read more than 1 degree in either position.

2. Place the pitot tube in the angle aluminum as shown in Figure 6, and level the pitot tube as indicated by the bull's-eye level. A vise may be used to hold the angle aluminum and pitot tube in the laboratory and a C-clamp in the field.
Note: A permanently mounted pitot tube and probe assembly may require a shorter section of angle aluminum to allow proper mounting on the assembly.

3. Place a degree-indicating level in the various positions, as illustrated in Figures 7 and 8.

4. Measure distances P_A and P_B with a micrometer.

ED_012958_00010468-00096

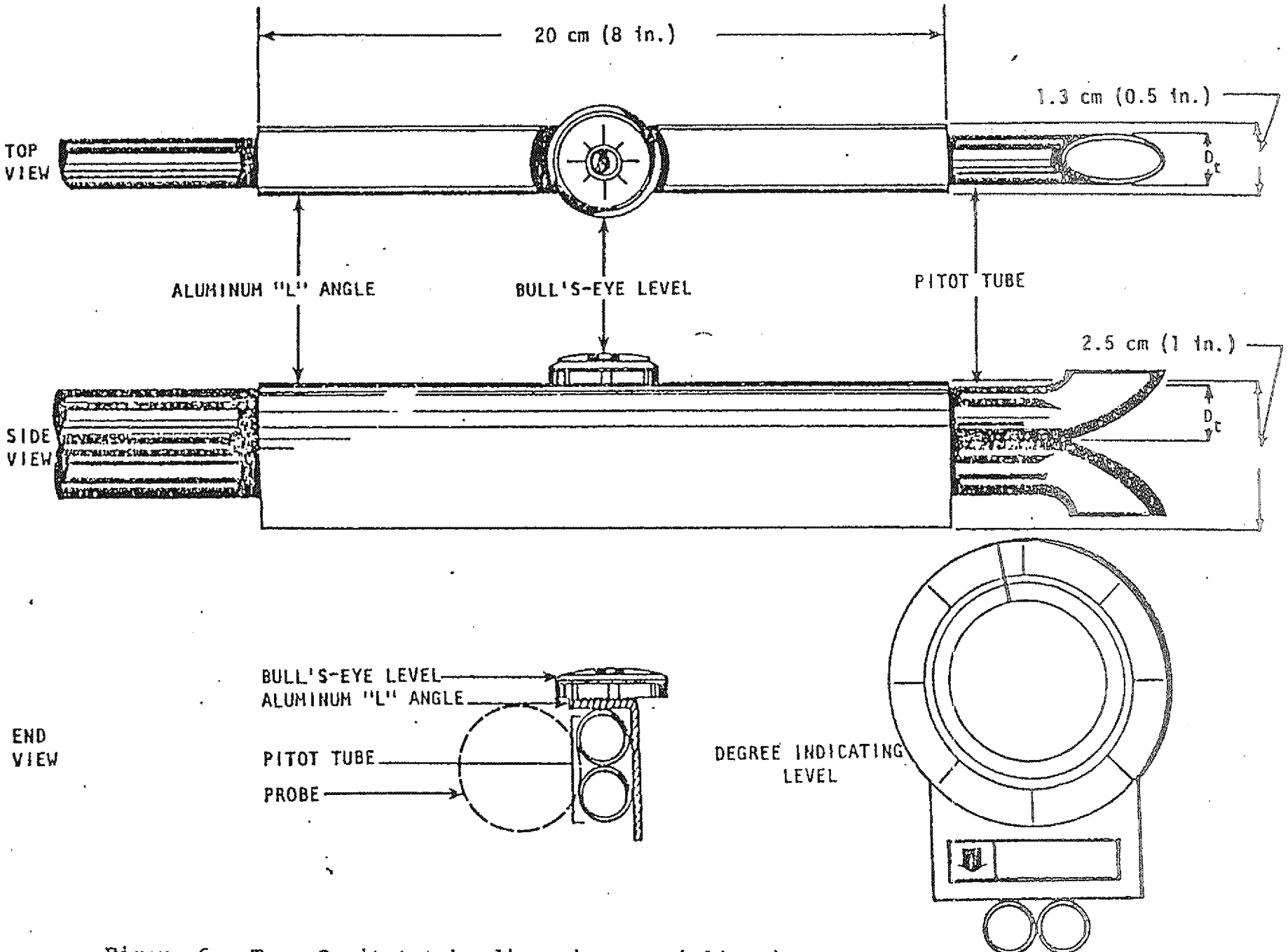

Figure 6. Type S pitot tube dimension specialization measurements.

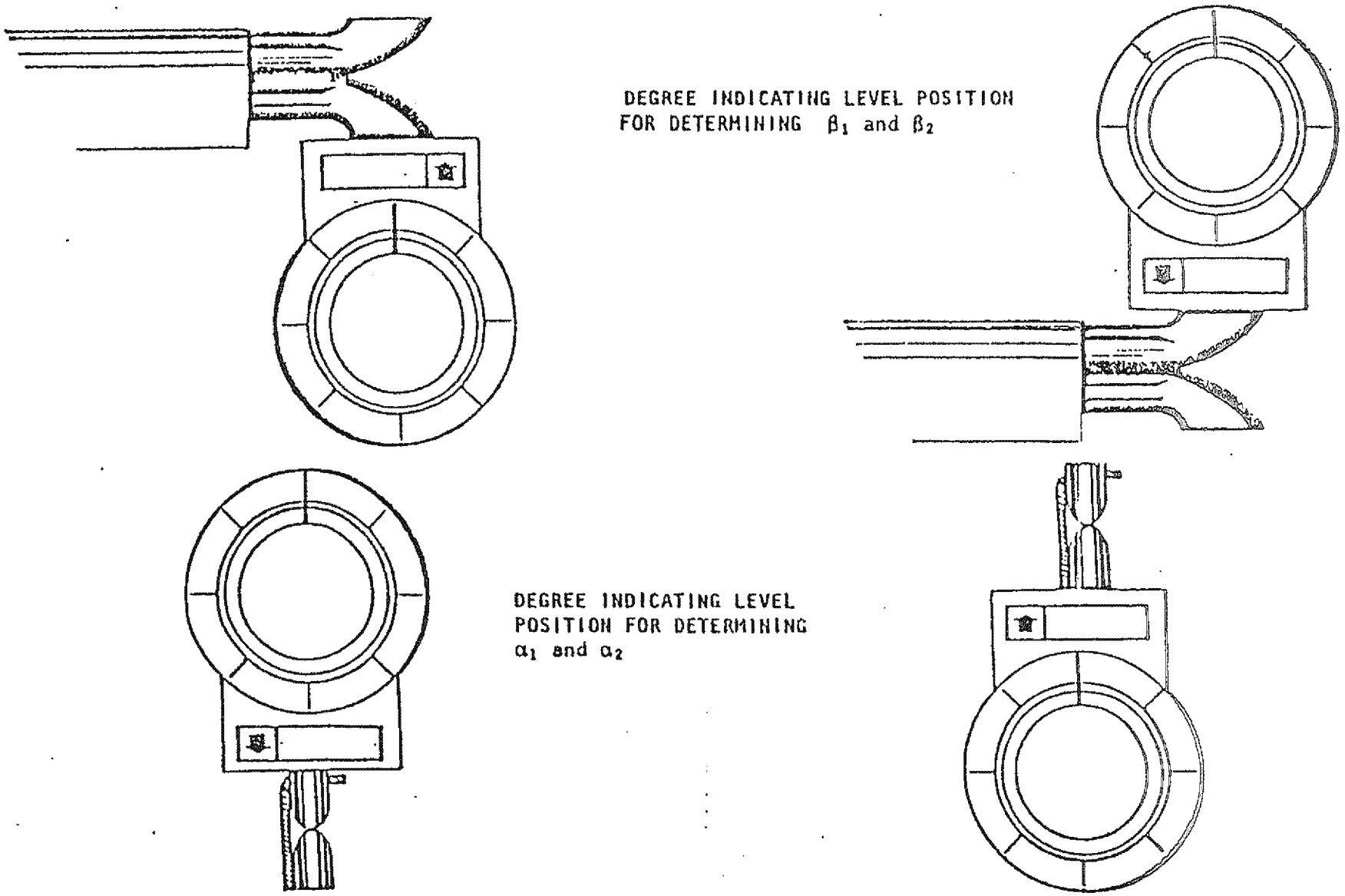

Figure 7. Position of dimension measurement.

ED_012958_00010468-00098

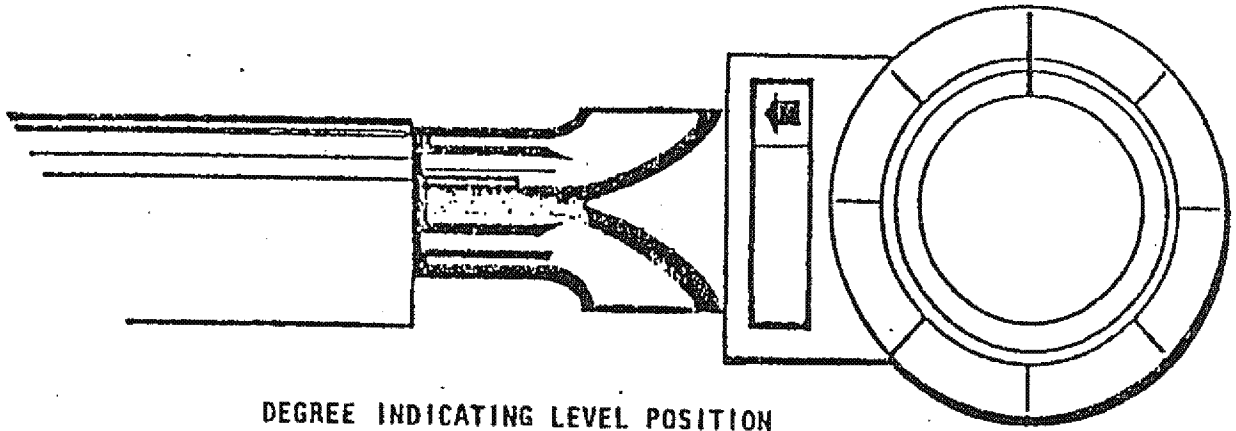

DEGREE INDICATING LEVEL POSITION
FOR DETERMINING γ, THEN CALCULATING Z.

DEGREE INDICATING LEVEL
POSITION FOR DETERMINING
θ, THEN CALCULATE W.

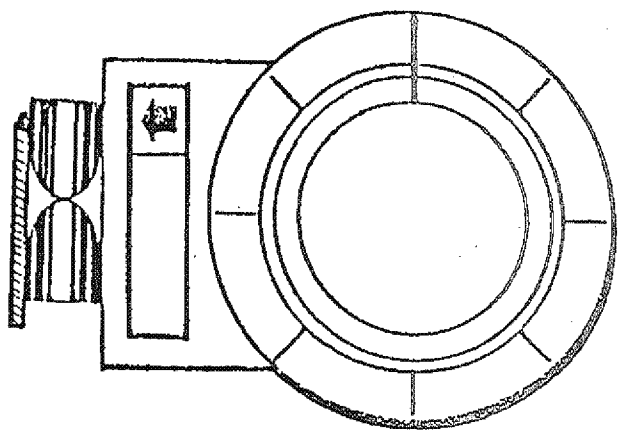

Figure 8. Position of dimension measurement.

ED_012958_00010468-00099

5. Measure the external tube diameter (D_t). Record all data on a data sheet such as Figure 9.

6. Calculate dimensions w and z using the following equations:

$$w = A \sin \theta \qquad \text{Equation 1}$$

$$z = A \sin \gamma \qquad \text{Equation 2}$$

where,

w = alignment dimension, cm (in.)

z = alignment dimension, cm (in.)

A = distance between tips, ($P_A + P_B$), cm (in.)

θ = angle in degrees

γ = angle in degrees.

Note: Pitot tubes with bent or damaged tubing may be difficult to check using this procedure.

If the Type-S pitot tube meets the face alignment criteria, an identification number should be assigned and permanently marked or engraved on the body of the tube.

References

1. Federal Register, Vol. 42. No. 160, August 18, 1977.

ED_012958_00010468-00100

Advanced Industrial Resources, Inc.
Type-S Pitot Tube Assembly Inspection Data Sheet

Date: 12/20/2019

Pitot Tube Assembly: P4-01 Caliper ID: CL-04

Performed by: JG

Pitot tube assembly level? X yes _____ no

Pitot tube openings damaged? _____ yes (explain below) X no

$_1$= 1 ^{o}(<10°) $_1$= 1 ^{o}(<5°)

$_2$= 1 ^{o}(<10°) $_2$= 1 ^{o}(<5°)

= 0 = 0 ^{o} A= 0.9 in.

z = A sin γ = 0.0000 in. <1/8 in. (0.125 in.)

w = A sin θ = 0.0000 in. <1/32 in. (0.03125 in.)

P_A= 0.450 in. **P_B**= 0.450 in.

D_t = 0.35 in. **P / D_t** = 1.28571 (1.05 </= and </= 1.50)

$P_a = P_b = P$

X = 0.97 (>0.75 in.) (Dist. between pitot and nozzle)

Y = 3.7 (>3.0 in.) (Dist. from nozzle union to pitot tube openings)

Z = 2.3 (>0.75 in.) (Dist. between pitot and stack thermocouple)

Does the pitot tube assembly meet the Method 2 requiremnets? X yes

_____ no (explain below)

If the Method 2 requirements are met then a coefficient of **0.84** is assigned to the pitot tube assembly being inspected.

Comments : _____

REV112712

Advanced Industrial Resources, Inc.

Nozzle Calibration Data

Client: Green Bay MSD

Date: 12-12-14

Location: Green Bay

Performed By: JG

Caliper ID: CL-04

Source	Nozzle ID	Nozzle Description	Measurements (inches)			Average (inches)
			1	2	3	
Incinerator 1	GN-1-2	Glass	0.200	0.200	0.200	0.200

Test Team Leader Review: _____

Data Entry Review: _____

Advanced Industrial Resources, Inc.

Analyzer Pretest Data Worksheet

Operator Name: Greg Essig
Facility Name, Location: Green Bay MSD Green Bay, WI

Source ID: **Stack S08**
Date: **12/12/19**

Analyte 1: Oxygen O2
Analyte 2: Carbon Dioxide CO2

EPA Method: 3A
EPA Method: 3A

Calibration Gas Serial Numbers & Concentrations

Gas (Zero, Low, Mid and High)	**Analyzer I.D.**	**Concentration** (% or ppm)	**Cylinder ID #**	**Expiration Date**	**Manufacturer**
Zero (N_2 or Air)	NA	0.00	0	1/0/1900	0
O2/ CO2 (Mid)	10	11.3/8.584	EB0094466	9/23/2027	Airgas
O2/ CO2 (High)	10	19.77/18.05	CC716961	9/24/2027	Airgas

Advanced Industrial Resources, Inc.

Stratification Worksheet

Stack Dimension & 12-pt Traverse Point Location			Stack Dimension & 3-pt Traverse Point Location		
Enter the stack diameter here (D_s) →		23.5	Stack Diameter (D_s) ⟶		23.5
Traverse Point No.	% of D_s	Actual Inches	Traverse Point No.	% of D_s	Actual Inches
1	2.1%	0.49	1	16.7%	3.92
2	6.7%	1.57	2	50.0%	11.75
3	11.8%	2.77	3	83.3%	19.58
4	17.7%	4.16	Stack was traversed during testing using 12 points		
5	25.0%	5.88			
6	35.6%	8.37			
7	64.4%	15.13			
8	75.0%	17.63			
9	82.3%	19.34			
10	88.2%	20.73			
11	93.3%	21.93			
12	97.9%	23.01			

ED_012958_00010468-00104

Airgas
an Air Liquide company

Airgas Specialty Gases
Airgas USA, LLC
630 United Drive
Durham, NC 27713
Airgas.com

CERTIFICATE OF ANALYSIS

Grade of Product: EPA Protocol

Part Number:	E03NI62E15A1071	Reference Number:	122-401601514-1
Cylinder Number:	CC716961	Cylinder Volume:	157.9 CF
Laboratory:	124 - Durham (SAP) - NC	Cylinder Pressure:	2015 PSIG
PGVP Number:	B22019	Valve Outlet:	590
Gas Code:	CO2,O2,BALN	Certification Date:	Sep 24, 2019

Expiration Date: Sep 24, 2027

Certification performed in accordance with "EPA Traceability Protocol for Assay and Certification of Gaseous Calibration Standards (May 2012)" document EPA 600/R-12/531, using the assay procedures listed. Analytical Methodology does not require correction for analytical interference. This cylinder has a total analytical uncertainty as stated below with a confidence level of 95%. There are no significant impurities which affect the use of this calibration mixture. All concentrations are on a volume/volume basis unless otherwise noted.

Do Not Use This Cylinder below 100 psig, i.e. 0.7 megapascals.

ANALYTICAL RESULTS

Component	Requested Concentration	Actual Concentration	Protocol Method	Total Relative Uncertainty	Assay Dates
CARBON DIOXIDE	18.00 %	18.05 %	G1	+/- 0.6% NIST Traceable	09/24/2019
OXYGEN	20.00 %	19.77 %	G1	+/- 0.5% NIST Traceable	09/24/2019
NITROGEN	Balance				

CALIBRATION STANDARDS

Type	Lot ID	Cylinder No	Concentration	Uncertainty	Expiration Date
NTRM	12061508	CC354696	19.87 % CARBON DIOXIDE/NITROGEN	+/- 0.6%	Jan 11, 2024
NTRM	08010202	1D003076	23.20 % OXYGEN/NITROGEN	+/- 0.4%	Jun 01, 2024

ANALYTICAL EQUIPMENT

Instrument/Make/Model	Analytical Principle	Last Multipoint Calibration
Horiba VIA510 CO2 2L6YXWY0	Nondispersive Infrared (NDIR)	Sep 05, 2019
Horiba MPA510 O2 41499150042	Paramagnetic	Sep 05, 2019

Triad Data Available Upon Request

Approved for Release

Airgas
an Air Liquide company

Airgas Specialty Gases
Airgas USA, LLC
630 United Drive
Durham, NC 27713
Airgas.com

CERTIFICATE OF ANALYSIS

Grade of Product: EPA Protocol

Part Number:	E03NI80E15A0007	Reference Number:	122-401602294-1
Cylinder Number:	EB0094466	Cylinder Volume:	150.4 CF
Laboratory:	124 - Durham (SAP) - NC	Cylinder Pressure:	2015 PSIG
PGVP Number:	B22019	Valve Outlet:	590
Gas Code:	CO2,O2,BALN	Certification Date:	Sep 23, 2019

Expiration Date: Sep 23, 2027

Certification performed in accordance with "EPA Traceability Protocol for Assay and Certification of Gaseous Calibration Standards (May 2012)" document EPA 600/R-12/531, using the assay procedures listed. Analytical Methodology does not require correction for analytical interference. This cylinder has a total analytical uncertainty as stated below with a confidence level of 95%. There are no significant impurities which affect the use of this calibration mixture. All concentrations are on a volume/volume basis unless otherwise noted.

Do Not Use This Cylinder below 100 psig, i.e. 0.7 megapascals.

ANALYTICAL RESULTS

Component	Requested Concentration	Actual Concentration	Protocol Method	Total Relative Uncertainty	Assay Dates
CARBON DIOXIDE	9.000 %	8.584 %	G1	+/- 0.6% NIST Traceable	09/23/2019
OXYGEN	11.00 %	11.30 %	G1	+/- 0.4% NIST Traceable	09/23/2019
NITROGEN	Balance				

CALIBRATION STANDARDS

Type	Lot ID	Cylinder No	Concentration	Uncertainty	Expiration Date
NTRM	13060638	CC414571	13.359 % CARBON DIOXIDE/NITROGEN	+/- 0.6%	May 14, 2025
NTRM	09060212	CC262381	9.961 % OXYGEN/NITROGEN	+/- 0.3%	Nov 05, 2024

ANALYTICAL EQUIPMENT

Instrument/Make/Model	Analytical Principle	Last Multipoint Calibration
Horiba VIA510 CO2 2L6YXWY0	Nondispersive Infrared (NDIR)	Sep 05, 2019
Horiba MPA510 O2 41499150042	Paramagnetic	Sep 05, 2019

Triad Data Available Upon Request

Approved for Release

APPENDIX G

PROCESS OPERATION DATA

GBMSD Stack Testing Results

Green Bay Facility - Fluid Bed Incinerator
BFP Sludge Cake Solids
12/12/2019

DATE	Run	LAB NO.	SAMPLE	%TS	Gallons/ hr	Wet lbs/hr	Dry lbs/hr	Dry ton/hr
12/12/2019	Run #1	RUN 1	RUN 1	34.9	1145.4	10446	3646	1.823
12/12/2019	Run #2	RUN 2	RUN 2	35.5	1124.3	10253.6	3640	1.820
12/12/2019	Run #3	RUN 3	RUN 3	36.2	1076.6	9818.59	3554	1.777

Building a Better World for All of Us®

TECHNICAL MEMORANDUM

TO: FILE

FROM: Jeremy Luebke

DATE: January 23, 2020

RE: Analysis of Impact of Mercury Emissions from FBI
SEH No. 153650 GODFR

The Green Bay Metropolitan Sewerage District (GBMSD) operates a fluid bed incinerator (FBI) and associated air pollution control equipment at their wastewater treatment plant located in Green Bay, Wisconsin. The purpose of this memorandum is to evaluate the potential impacts of operating the FBI without one of the emission control system, the Granular Activated Carbon (GAC) system. The GAC is designed to control mercury emissions.

The purpose of this memorandum is to document that the GBMSD demonstrates compliance with Wisconsin Administrative Code Chapter NR 445 Table A - *Emission Thresholds, Standards and Control Requirements for All Sources of Hazardous Air Contaminates,* specifically for mercury compounds, from the FBI (I08) when the GAC control device is offline.

NR 445.07 Emission thresholds, standards, control requirements and exemptions, paragraph (1)(a) states the following:

> *No owner or operator of a source may cause, allow or permit emissions of a hazardous air contaminant listed in Table A in such quantity or concentration or for such duration as to cause an ambient air concentration of the contaminant off the source property that exceeds the concentration in column (g) of Table A for the contaminant.*

Column (g) of Table A lists the Ambient Air Standard (per time period in column h expresses as micrograms per cubic meter).

NR 445.08 describes the acceptable methods by which to demonstrate compliance with the Ambient Air Standards in Table A. NR 445.08(1) requires that the determination of compliance shall be done while the source is operating under normal permit conditions, or in the absent of a permit, the maximum theoretical emissions. The incinerator mercury emission rate was determined in a December 12, 2019 stack test. The incinerator was operating under permit compliant conditions without the GAC operating, resulting in a worst-case scenario emission rate for mercury emissions. The emission rate for mercury, averaged over all three runs is 0.000646 lb/hr.

Compliance Demonstration via NR 445.08(2)(a) – Thresholds for Emission Rates

The first method that can be used to demonstrate compliance, as provided in NR 445.08(2), paragraph (a) is to show that emissions from the incinerator are below Table A Thresholds for Emission Points (expressed as pounds per hour or pounds per year) in columns (c), (d), (e), or (f), depending on stack height. The incinerator stack height has a height of 120 feet above grade, requiring emissions to be

compared to column (f) "Emissions from Stacks ≥75 ft" threshold values. If the source has emission rates less than the thresholds in Table A, column (f), it is assumed that the Ambient Air Standards in column (g) will not be exceeded.

NR 445.07 Table A, column (f) threshold values are not exceeded for inorganic mercury. In the following **Table 1 – Mercury Emission Rate Comparisons to Table A Thresholds for Emission Points**, Table A threshold values are compared to the stack test incinerator emission rate.

Table 1 – Mercury Emission Comparison

	December 2019 Stack Test (lb/hr)	December 2019 Stack Test (lb/yr)	Table A Thresholds for Stacks ≥75 ft (lb/hr)	*% of Table A Thresholds*
Hg	0.000646	-	0.0405	*1.60%*
	-	5.66	1,838	*0.31%*

Note: The annual emission rate is the hourly rate, 0.000646 lb/hr, multiplied by 8,760 hour per year.

Compliance Demonstration via NR 445.08(2)(b) – Ambient Air Concentrations

Secondly, NR 445.08(2) paragraph (b) provides the option to demonstrate that the ambient air concentration off the source property is less than the column (g) "Ambient Air Standards" for mercury are surpassed. This demonstration is conducted through dispersion modeling as shown below.

This dispersion modeling analysis was performed using the AMS/EPA Regulatory Model (AERMOD) (Version 18081) with the Lakes® AERMOD user interface. Five years (2011-2015) of preprocessed meteorological data, obtained from the WDNR website, were used in this analysis. The surface meteorological and upper air meteorological data were taken from the Green Bay, WI station.

The receptors used in this analysis consisted of a grid with fenceline receptors placed every 50 meters, 50-meter receptor resolution out to a distance of one kilometer, and receptors placed every 200 meters until a distance of two kilometers. Receptor points within the facility were not considered. As per WDNR policy, terrain elevations as derived from AERMAP were incorporated in the modeling analysis. Elevations were determined using USGS National Elevation Dataset (NED) files obtained from the USGS National Map Seamless Server website. USGS NED data is in conformance with the North American Datum of 1983 (NAD 83).

Previous WDNR modeling parameters for the incinerator (I08) were used for stack location, height, and diameter. However, for this modeling exercise, actual measured parameters from the December 2019 stack test were used for exhaust temperature, exit velocity, airflow and emission rate. Parameters can be found below in **Table 2**.

Table 2 – Modeling Input Parameters

Stack ID	Description	X	Y	Base Elevation	Height	Diameter	Rainhat	Exhaust Temp	Exit Velocity	Air Flow	Mercury
		meters	meters	meters	feet	feet	Y/N	F	m/s	acfm	lb/hr
I08	Fluid Bed Incinerator	420555	4931795.4	179.0	120	2.0	N	113.3	15.63	9,267	0.000646

Ambient air standards are not surpassed in this dispersion modeling demonstration. Modeling results are shown below in **Table 3**.

Table 3 – Modeling Results Compared to Table A Ambient Air Standards

	Averaging Period	Statistic / Metric	Modeled Concentration ($\mu g/m^3$)	NR 445 Ambient Air Standards ($\mu g/m^3$)	*% of NR 445*
Hg	24-hr	1st Highest	0.00187	*0.6*	*0.3%*
	Annual	1st Highest	0.00004	*0.3*	*0.01%*

Conclusions

The District can demonstrate compliance with NR 445.07(1) requirements. Uncontrolled mercury emissions from the incinerator do not surpass Table A, column (f) Thresholds for Emission Points or column (g) Ambient Air Standards.

JTL/pas
\\sehsb\projects\fj\g\gbmsd\145325\3-env-stdy-regs\30-env-doc\8-air-qual\operation without gac\mercury modeling\december 2019 stack test modeling\mercury nr445 modeling memo_december 2019 stack test_2020.01.21.docx