PLEWS SHADLEY RACHER & BRAUN LLP

ATTORNEYS AT LAW

GEORGE M. PLEWS [1]
SUE A. SHADLEY (1952-2015)
PETER M. RACHER
CHRISTOPHER J. BRAUN [1,2]
JEFFREY D. CLAFLIN
S. CURTIS DEVOE
JEFFREY D. FEATHERSTUN
JOHN M. KETCHAM [1,3]
ALEXANDRA S. SYLVIA [4]
BRETT E. NELSON [5]
JOHN D. MORIARTY
AMY E. ROMIG [4]
GREGORY M. GOTWALD
JONATHAN P. EMENHISER
THAO T. NGUYEN [9]
TONYA J. BOND [1]
TODD G. RELUE [8]
THERESA M. WILLARD [1]
DANIEL P. CORY
COLIN E. CONNOR
SEAN M. HIRSCHTEN
RYAN T. LEAGRE

SENIOR COUNSEL:
JOHN B. BRIDGE
JEFFREY A. TOWNSEND

1346 NORTH DELAWARE STREET
INDIANAPOLIS, INDIANA 46202-2415
TELEPHONE (317) 637-0700
FACSIMILE (317) 637-0710

53732 GENERATIONS DRIVE
SOUTH BEND, INDIANA 46635-1539
TELEPHONE (574) 273-1010
FACSIMILE (574) 271-2050

www.psrb.com

SENDER'S E-MAIL: cbraun@psrb.com

JOSH S. TATUM
ANDREA K. TOWNSEND
KYLE D. STEINBRUECK [7,10]
AARON J. BROCK [11]
JOANNE R. SOMMERS
CHRIS E. KOZAK [3]
NICHOLAS J. BOGNANNO
KYLE D. SMITH

OF COUNSEL:
CHRISTINE C.H. PLEWS
MARY ANN F. SAGGESE [6]
F. RONALDS WALKER [1,7]
ANGELA M. GREEN [2]

[1] REGISTERED MEDIATOR
[2] ALSO ADMITTED IN THE DISTRICT OF COLUMBIA
[3] ALSO ADMITTED IN MICHIGAN
[4] ALSO ADMITTED IN KENTUCKY
[5] REGISTERED TO PRACTICE BEFORE THE U.S. PATENT AND TRADEMARK OFFICE
[6] ALSO ADMITTED IN VIRGINIA
[7] ALSO ADMITTED IN ILLINOIS
[8] ALSO ADMITTED IN NORTH CAROLINA
[9] ALSO ADMITTED IN CALIFORNIA
[10] ALSO ADMITTED IN MISSOURI
[11] ALSO ADMITTED IN FLORIDA

April 6, 2020

Sent Via E-Mail & UPS Worldwide Express

McMillan-McGee Corp.
4895 35B Street Southeast
Calgary, Alberta T2B 3M9
Canada

c/o:
Mr. Bruce McGee
mcgee@mcmillan-mcgee.com
Mr. Brent Winder
bwinder@mcmillan-mcgee.com
Mr. David A. Rountree
drountree@mcmillan-mcgee.com

Re: **Implementation of EPA-Approved Sampling Plan**

Gentlemen:

My firm has been retained by the Trustees of the Third Site Trust Fund with respect to the dispute between McMillan-McGee Corp. and the Trust regarding the failure of the electrical resistance heating treatment system designed and installed by McMillan-McGee ("MM") at the Third Site Superfund site located at 985 S. US Highway 421 near Zionsville, Indiana ("Site").

On or about February 10, 2020, the Trustees' consultant, Suzanne O'Hara, from Geosyntec Consultants, Inc., submitted to EPA and IDEM the Third Site DNAPL Containment Area Sampling Work Plan. On March 13, 2020, Ms. O'Hara submitted to EPA and IDEM an Addendum to the sampling plan. The Sampling Plan and Addendum are referred to together in this letter as "the Work Plan". For ease of reference a copy of the Work Plan is enclosed.

By email dated March 25, 2020, the EPA Region 5 Remedial Project Manager for the Site approved the Work Plan on behalf of EPA and IDEM. For ease of reference a copy of the March 25 email is enclosed. As you will see, EPA approved the Work Plan and also requested that certain additional work be performed. Finally, EPA directed that the work be initiated by April 30, 2020. On March 27, 2020 Geosyntec responded to EPA with respect to the additional work. For ease of reference a copy that response is also enclosed. MM previously received copies of all of these documents from Trustee, Mr. Bernstein, on March 31, 2020.

To begin implementation of the EPA-approved Work Plan it will be necessary to temporarily relocate within the fenced in area of the Site certain equipment installed by MM. After the Work Plan has been completed, it may be necessary to restore some or all of MM's equipment. To that end, please let me know no later than close of business on Friday, April 10, 2020, whether MM will agree to timely relocate its equipment so that the Trust's consultants can inititate and begin implementing the Work Plan on or before EPA's April 30, 2020 deadline. If so, I will be pleased to work with you to coordinate Site access to facilitate your relocation activities. In the meantime if you have any questions or would like to discuss this letter, please do not hesitate to contact me, or if you have retained Indiana counsel please have your counsel contact me.

We appreciate your prompt attention to this request.

Very truly yours,

Christopher J. Braun

Enclosures

Sent Via E-Mail (w/encls.)

cc: Mr. Michael J. Ohl
Mr. Douglas Petroff

Geosyntec consultants

engineers | scientists | innovators

Third Site DNAPL Containment Area Sampling Work Plan

Prepared for

Matthew J. Ohl.
USEPA

Prepared by

Geosyntec Consultants International Inc.
130 Stone Road West
Guelph, Ontario N1G 3Z2

Project Number TR0485D

February 10, 2020

Geosyntec consultants

TABLE OF CONTENTS

1. INTRODUCTION 1
   1.1 Purpose 1
   1.2 Objectives 1
   1.3 Organization 2

2. BACKGROUND 2
   2.1 Geology 2
   2.2 Hydrogeology 3
   2.3 DNAPL Area Contaminant Distribution 3

3. SCOPE OF WORK 4
   3.1 Groundwater Sampling 4
   3.2 Discrete Soil Sampling 5

4. SCHEDULE 6

5. REFERENCES 7

LIST OF FIGURES

Figure 1: Site Map and Monitoring Well Network

Figure 2: Cross Section Locations

Figure 3: Cross Section A-A'

Figure 4: Cross Section B-B'

Figure 5: Cross Section C-C'

Figure 6: Cross Section D-D'

Figure 7: Groundwater Flow Regime Upper Sand and Gravel Unit (Operating Extraction System)

Figure 8: Proposed Groundwater Sampling Locations

Figure 6: Proposed Soil Sampling Plan

LIST OF ATTACHMENTS

Attachment 1: Hydrasleeves

1. INTRODUCTION

On behalf of the Trustee of the Third Site Trust Fund, Geosyntec Consultants (Geosyntec) with the assistance of Ramboll have prepared this Dense Non-Aqueous Phase Liquid (DNAPL) Containment Area Sampling Work Plan for the Third Site (or Site) located at 985 S. US Highway 421 in Zionsville, Indiana (**Figure 1**). This work plan outlines the field activities required to identify the source of residual mass observed in compliance monitoring wells P-1 and P-2 following Electrical Resistance Heating (ERH) within the DNAPL containment area.

1.1 Purpose

The purpose of the proposed work is to further evaluate the distribution of contaminants within the Upper Till, the Upper Sand and Gravel Unit and the top portion of the Lower Till in the DNAPL containment area following the electrical resistance heating (ERH) treatment work conducted by McMillan McGee (MM). The data collected will aid in determining the failure mechanisms of the ERH treatment (groundwater concentrations exceed performance metrics in compliance monitoring wells P-1 and P-2). Results from the proposed investigations in this work plan will inform recommendations for potential future remedial actions.

1.2 Objectives

The specific objectives of the proposed work are to:

- Develop a current understanding of contaminant distribution within the DNAPL containment area following ERH, specifically:
  - The current lateral and vertical distribution of contaminants in the DNAPL containment area; and,
  - Potential mass in the upper portion of the Lower Till underlying the DNAPL containment area.
- Identify the source of contaminant mass detected in wells P-1 and P-2 following ERH, specifically, whether there is residual untreated mass within the ERH target treatment area or whether mass is entering the ERH treatment volume from the underlying Lower Till.

ED_012957A_00001240-00005

1.3 Organization

This Work Plan is organized as follows:

1. Section 2 presents a summary of the Site background;
2. Section 3 describes the proposed investigation and sampling;
3. Section 4 presents the project schedule; and
4. Section 5 contains a list of references used in preparation of this work plan.

2. BACKGROUND

2.1 Geology

The Site is underlain by four stratigraphic units (Geosyntec, 2017) and include (shallowest to deepest):

- Fill material with high clay content up to 10 feet thick;
- Upper Till (1 to 10 feet thick) comprising clayey silt and silty clay with occasional lenses of sand and gravel or silty sand with lenses or pockets of gravelly sand up to 5 feet thick;
- Upper Sand and Gravel (3 to 30 feet thick), comprising fine to coarse sand and gravel unit with some silt lenses; and
- Lower Till (120 to 130 feet thick), an aquitard composed predominantly of clayey silt and silty clay.

A mixed glacio-fluvial/colluvial depositional environment was inferred for the Upper Sand and Gravel unit, which likely formed as post-glacial deposits from meltwater outwash. A paleo-channel was identified as a deepening of the Upper Sand and Gravel unit to the south of the Third Site (Geosyntec, 2017). A set of cross sections were prepared during the 2014 DNAPL Containment Area Supplemental Data Collection event which show the position of the stratigraphic units in the DNAPL containment area (**Figures 2, 3, 4, 5, 6;** ENVIRON 2014).

This DNAPL containment area sampling investigation focuses on the Upper Till, Upper Sand and Gravel, and the top portion of the Lower Till stratigraphic units.

ED_012957A_00001240-00006

2.2 Hydrogeology

Historical and current water level measurements indicate that the groundwater within the Upper Sand and Gravel Unit generally flows towards the southwest (**Figure 7**). Inferred differences in hydraulic gradient between the northern half of the Site (approximately 0.02 feet per feet) and the southern half of the Site and off-Site area (approximately 0.004 feet per feet) are attributed to an apparent increase in aquifer thickness and transmissivity downgradient of Bankert Pond.

The hydraulic conductivity in the Upper Sand and Gravel unit is between 5.8×10^{-3} and 1.9×10^{-2} centimetres per second (cm/s) (Geosyntec, 2017). The Upper Sand and Gravel unit is semi-confined by the overlying Upper Till. The hydraulic conductivity in the Upper Till is generally lower than the Upper Sand and Gravel unit and is between 6.8×10^{-4} and 7.3×10^{-3} cm/s (Geosyntec, 2017). The approximate water elevation in Bankert Pond is 875 ft Mean Sea Level (MSL). Historic data does indicate that the pond is likely to be hydraulically connected to and incised into the Upper Sand and Gravel unit (Environ 1999).

2.3 DNAPL Area Contaminant Distribution

The DNAPL area has been contained with the installation of a sealed sheet pile wall (**Figures 1 and 2**) that extends into the Lower Till (confining unit). ERH was used to remediate the DNAPL containment area and the adjoining Additional Thermal Treatment (ATT) area. ERH at the Site commenced on September 24, 2018 and continued until January 24, 2019. March 2019 groundwater sampling indicated concentrations of total VOCs in ERH compliance monitor wells P-1, P-2, and MW-27R (due to acetone) exceeded the post-ERH compliance target total VOC concentration (**Table 1**). As a result, ERH was restarted on April 22, 2019 with operations focused in the vicinity of P-1 and P-2. Heating continued in the vicinity of P-1 and P-2 until July 25, 2019.

During each phase of ERH, groundwater sampling initially indicated concentrations of VOCs were below the target threshold in samples collected by MM from P-1 and P-2. However, within approximately 6-weeks of ERH being terminated, when performance monitoring sampling was conducted by Ramboll first on March 29, 2019 and then again on September 5, 2019 after the second heating phase, concentrations of total VOCs in both P-1 and P-2 exceeded the target threshold concentrations (**Table 1**). The location of the contaminant mass that is resulting in the observed rebound in total VOC concentrations in P-1 and P-2 is currently uncertain.

ED_012957A_00001240-00007

3. SCOPE OF WORK

The investigation activities presented in this work plan include water level gauging and sampling of existing ERH extraction and performance monitoring wells followed by adaptive field investigation activities using a direct push technology (DPT) drill rig or mini sonic drill rig to collect soil cores for laboratory analysis of VOCs. The field investigation activities will be performed primarily by Ramboll with support and data interpretation from Geosyntec. Prior to commencing sampling activities, the existing ERH equipment (i.e., extraction lines and cables) will need to be moved by the ERH contractor to provide sufficient access to the proposed sampling locations so that the scope of work presented herein can be safely completed.

The exact location of the proposed soil borings presented in this work plan may be adjusted based on access, subsurface or overhead obstructions and restrictions (e.g. above or below ground utilities), and real-time evaluation of geology/hydrogeology data from the soil cores.

3.1 Groundwater Sampling

Groundwater samples will be collected from 14 existing wells within the DNAPL containment area (P-1, P-2, X-B3, X-B4, X-C1, X-C3, X-C4, X-D1, X-D2, X-D3, X-D4, X-E1, X-E2, and X-E3, **Figure 8**). Prior to collection of groundwater samples, the ERH contractor will need to remove any ERH equipment from the wells (i.e., pumps or air supply tubing) and the wells allowed to sit undisturbed for 24 hrs to allow for each well to be gauged for depth to water.

Grab groundwater samples will be collected from the existing wells using HydraSleeve™ samplers (Attachment 1). Following gauging depth to water in the 14 wells, two HydraSleeve™ samplers will be deployed in series in each of the proposed wells; one sampler will be placed so the top of the sampler is approximately 3 ft from the bottom of the well and the second sampler will be deployed such that the top of the sampler is approximately 3 ft below groundwater or the top of the well screen, whichever is deeper. HydraSleeve™ samplers will be deployed and the water column allowed to recover for approximately 24-hoursafter which groundwater samples will be collected in accordance with the HydraSleeve™ Standard Operating Procedures (Attachment 1). Attachment 1 also provide additional information and illustrations regarding the methods to be used when deploying HydraSleeve™ samplers. Groundwater samples will be analysed for VOCs by EPA method 8260B. Sample handling and laboratory analysis will be done

ED_012957A_00001240-00008

according to the procedures and limits presented in the Site Quality Assurance Project Plan (ENVIRON 2013).

Following collection of the grab groundwater samples, groundwater samples will also be collected using low-flow sampling methods from wells P-1, P-2, X-E1, X-D1, and X-C1 to obtain data from a blended screen interval and for comparison to previous results (P-1 and P-2).

3.2 Discrete Soil Sampling

Soil cores are more likely to provide a depth discrete profile of contaminant concentrations through the target treatment depth than depth discrete groundwater samples due to the low permeability of the Upper and Lower Tills. Continuous core soil samples will be collected to a depth of 46 ft bgs using either DPT or sonic drilling technologies from at least eight (8) borings locations (4 borings in locations sampled prior to heating plus an additional 4 to 10 at locations; **Figure 9**) and up to as many as 14 boring locations. The results of the grab groundwater samples will be used to evaluate potential additional locations for discrete soil sampling.

Continuous core soil samples will be collected from ground surface to a target depth of approximately 46 feet below ground surface (ft bgs). If the DPT rig cannot achieve the target depth of 46 ft bgs, a compact sonic drill rig may be mobilized to achieve the target depth. Soil cores will be screened in the field with a photoionization detector (PID). One soil sample will be collected from each 5-ft soil core from the portion of the core with the greatest PID response and retained for laboratory analysis. Soil samples will be collected into laboratory provided clean 8 oz glass jars, sealed, placed in sealed plastic bags, and stored on ice for transport to the analytical laboratory under chain of custody procedures. Soil samples will be submitted for analysis of VOCs by EPA method 8260B.

It is possible that the soils in the vicinity of the investigation may still have elevated temperatures. MM will be asked to confirm temperatures in the cell using their existing equipment prior to moving it for the sampling. However, should elevated temperatures exist, the temperature of the soil cores will be monitored, and safe handling procedures will be implemented if elevated temperatures are encountered. The following steps will be taken when handling the soil cores:

- Drillers to wear heat resistant gloves;
- Outside of drill rods to be scanned using infrared thermometer while pulling them up:

ED_012957A_00001240-00009

- Any sections with elevated temperatures to be placed in ice bath and allowed to cool prior to opening drill rod and extracting soil core; and,
- Diligent monitoring or air space and cores with PID due to higher potential for volatilization.

Upon reaching the target depth, soil borings will be backfilled with hydrated bentonite or grout to seal the borehole.

4. SCHEDULE

An anticipated schedule to complete the field investigation activities discussed in this work plan is presented below:

Task	**Timeframe**
Approval to proceed received from the EPA.	Week 0
Field preparation including scheduling, subcontractor contracting and Site access	4 weeks
ERH Contractor equipment removal	2 days* (need to confirm with ERH contractor)
Completion of groundwater sampling	3 days
Groundwater sample analysis and interpretation of laboratory data	10 to 14 days
Completion of soil sampling	1 week
Analysis and generation of a report by Geosyntec that summarizes the finding of the results.	4 weeks
Total Number of Weeks to Completion Following Approval to Proceed	**12 weeks**

ED_012957A_00001240-00010

5. REFERENCES

ENVIRON 1999. *Third Site Historical Data Summary, Third Site, Zionsville, Indiana.* August 1999; ENVIRON International Corporation.

Environ 2013. QAPP Addendum = *Quality Assurance Project Plan Addendum, Third Site, Zionsville, Indiana*. Submitted to: USEPA, Region 5. On behalf of: Third Site Trustees. Prepared by: ENVIRON. Dated February 2013.

ENVIRON 2014. DNAPL Containment Area *Supplemental Data Collection Report, Third Site Superfund Site, Zionsville, Indiana.* November 1, 2014: ENVIRON International Corporation.

Geosyntec 2017. *Draft Third Site Data Gap Investigation Work Plan (Revision 1).* Guelph Ontario: November 30, 2017; Geosyntec Consultants, Inc.

Geosyntec 2019. Hydraulic capture analysis at Third Site using a groundwater flow model. Guelph Ontario: March 22, 2019; Geosyntec Consultants, Inc.

ED_012957A_00001240-00011

Geosyntec consultants

FIGURES

ED_012957A_00001240-00012

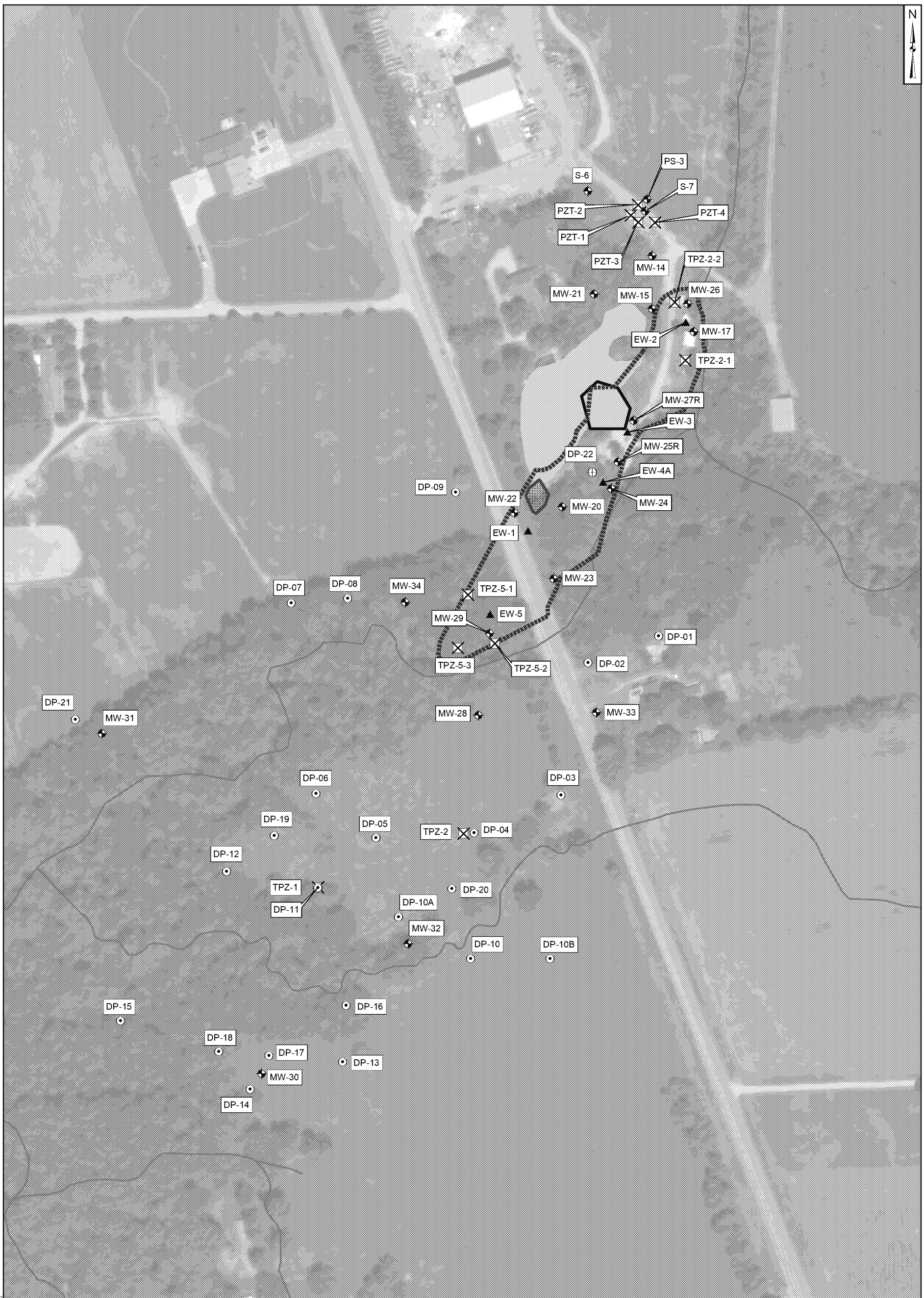

Legend

- Soil Boring
- Monitoring Well
- Extraction Well
- Previous Direct Push Sample
- Piezometer
- DNAPL Containment Area
- SVE Area 1
- SVE Area 2
- Third Site Area
- Bankert Pond
- Finley Creek

Notes:

1. Basemap Source: ESRI, DigitalGlobe, Geoeye, Earthstar, Geographics, CNES/Airbus DS, USDA, USGS, AEX, Getmapping, Aerogrid, IGN, IGP, swisstopo.

200 100 0 200 Feet

Site Map and Monitoring Well Network

Third Site
985 South U.S. Highway 421
Zionsville, Indiana

Geosyntec consultants

Guelph | April 2019

Figure 1

Path: P:\PR\Projects\TR0485 3rd site data review\Database and GIS\ThirdSite_SiteMap.mxd

Coordinate System: NAD 1927 StatePlane Indiana West FIPS 1302

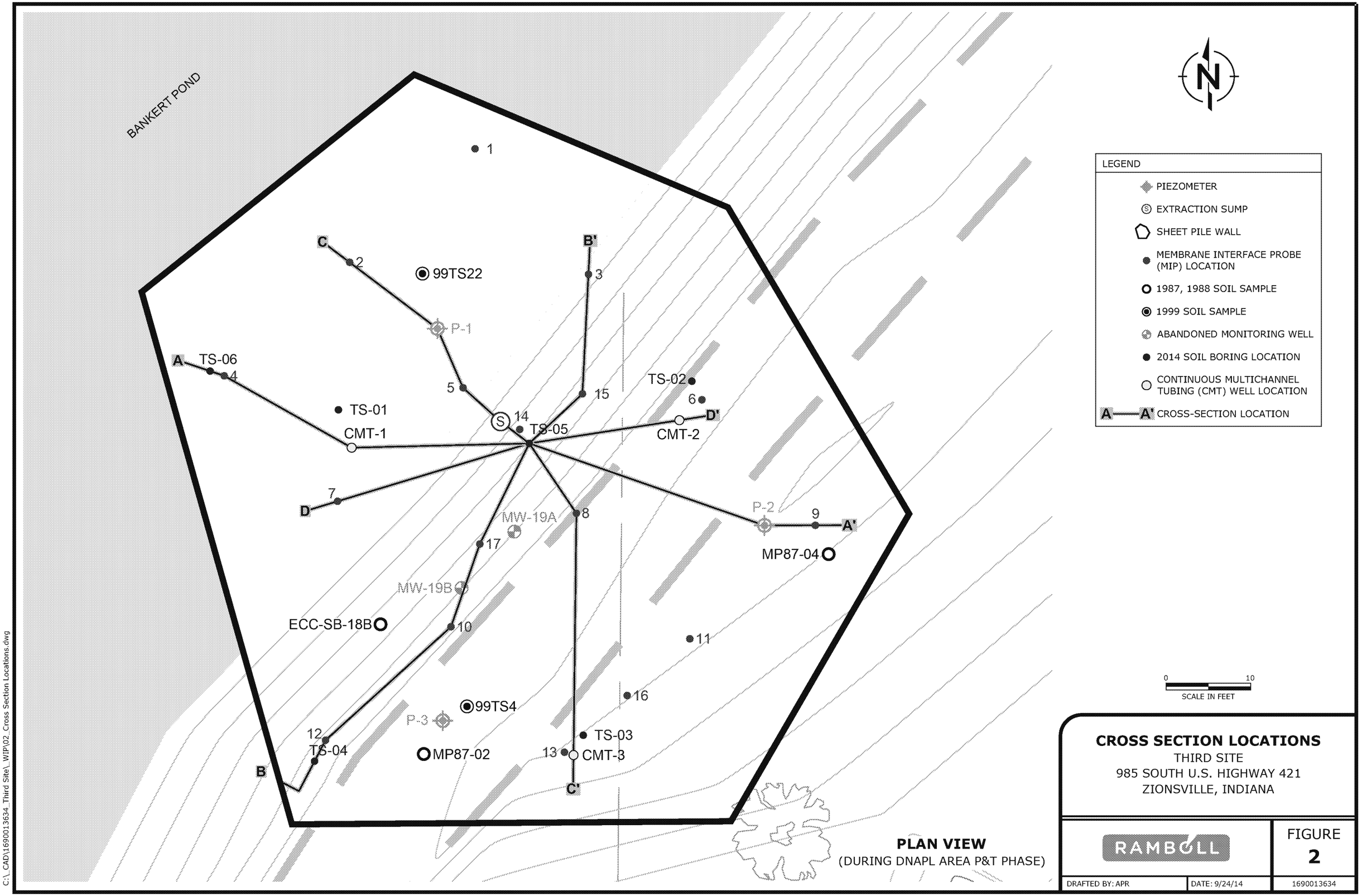
BANKERT POND
1
C
2
99TS22
B'
3
P-1
A
TS-06
4
5
TS-01
CMT-1
S
14
TS-05
15
TS-02
6
D'
CMT-2
7
D
MW-19A
8
17
P-2
9
A'
MP87-04
MW-19B
ECC-SB-18B
10
11
16
99TS4
P-3
12
TS-04
MP87-02
13
CMT-3
TS-03
B
C'
LEGEND
PIEZOMETER
EXTRACTION SUMP
SHEET PILE WALL
MEMBRANE INTERFACE PROBE (MIP) LOCATION
1987, 1988 SOIL SAMPLE
1999 SOIL SAMPLE
ABANDONED MONITORING WELL
2014 SOIL BORING LOCATION
CONTINUOUS MULTICHANNEL TUBING (CMT) WELL LOCATION
A——A' CROSS-SECTION LOCATION
0
10
SCALE IN FEET
PLAN VIEW
(DURING DNAPL AREA P&T PHASE)
CROSS SECTION LOCATIONS
THIRD SITE
985 SOUTH U.S. HIGHWAY 421
ZIONSVILLE, INDIANA
RAMBOLL
FIGURE
2
DRAFTED BY: APR
DATE: 9/24/14
1690013634
C:_CAD\1690013634_Third Site_WIP\02_Cross Section Locations.dwg

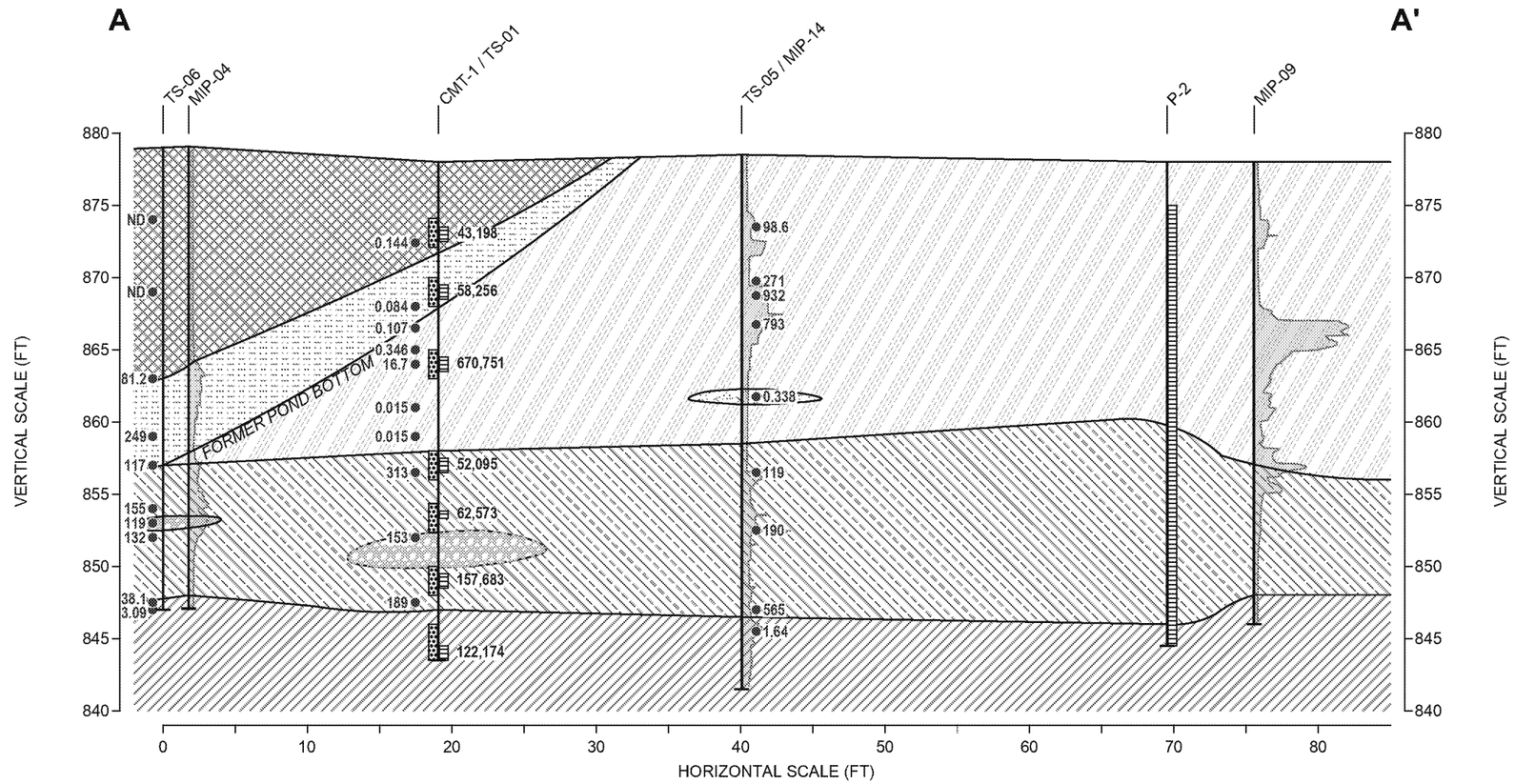

LEGEND

- SAND PACK INTERVAL
- SCREEN INTERVAL
- SOIL SAMPLE
- MEMBRANE INTERFACE PROBE (MIP) XSD SENSOR RESPONSE

0 — 4
XSD SCALE ($\mu V x 10^6$)

119 TOTAL VOC CONCENTRATION IN SOIL (mg/kg)

ND NO VOC WAS DETECTED ABOVE ITS RESPECTIVE LABORATORY REPORTING LIMIT

52,095 TOTAL VOC CONCENTRATION IN GROUNDWATER (ug/L)

LITHOLOGY

- FILL SAND
- GRAVEL
- SAND
- SAND/GRAVEL
- SILT
- SILTY SAND
- SILT/CLAY

CROSS SECTION A-A'
THIRD SITE
985 SOUTH U.S. HIGHWAY 421
ZIONSVILLE, INDIANA

RAMBOLL

FIGURE
3

DRAFTED BY: APR | DATE: 1/26/20 | 1690013634

C:_CAD\1690013634_Third Site_WIP\03_06_Cross Sections ABCD.dwg

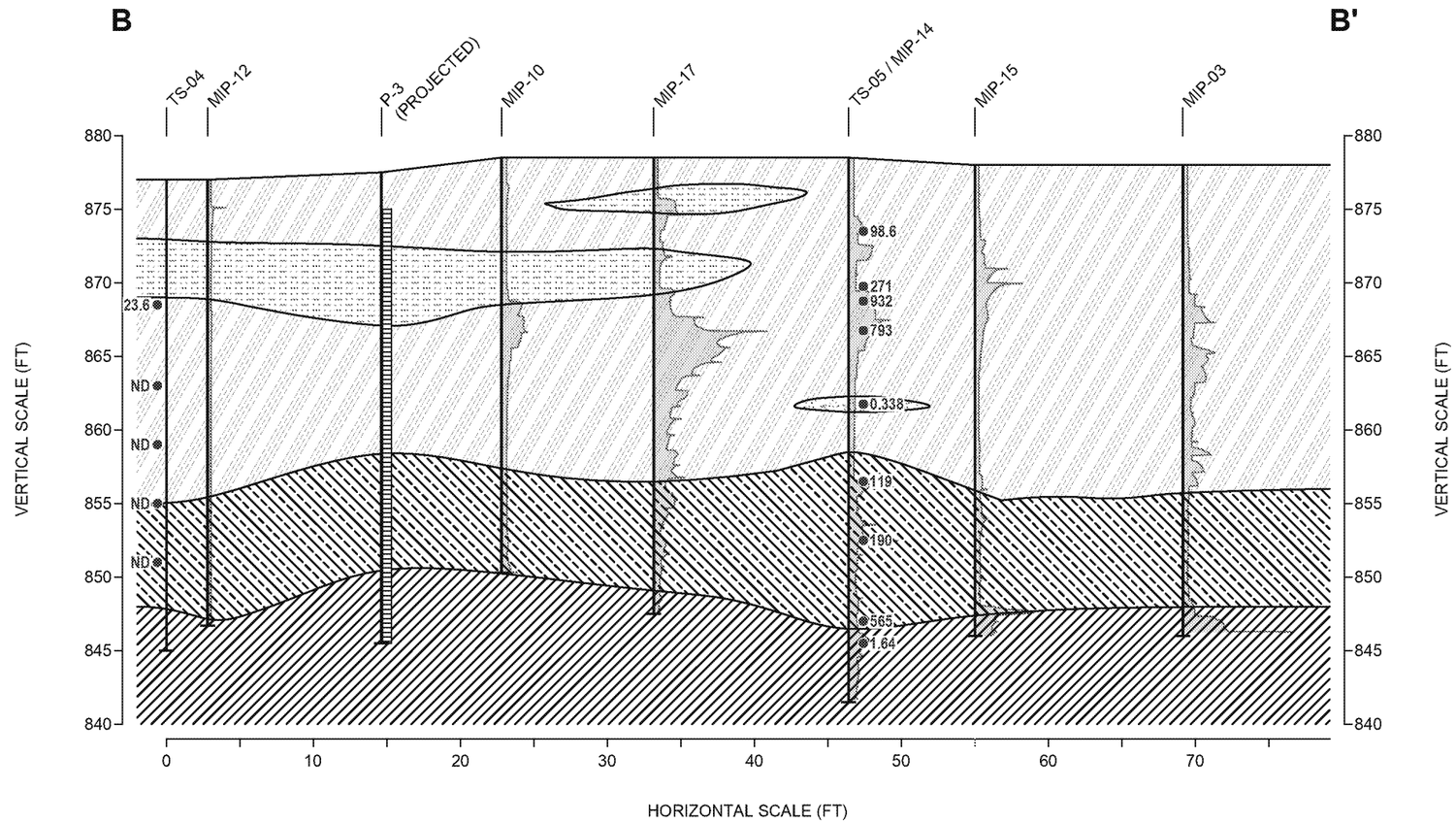

LEGEND

- SAND PACK INTERVAL
- SCREEN INTERVAL
- SOIL SAMPLE
- MEMBRANE INTERFACE PROBE (MIP) XSD SENSOR RESPONSE

0 — 4
XSD SCALE ($\mu V x 10^6$)

119 TOTAL VOC CONCENTRATION IN SOIL (mg/kg)

ND NO VOC WAS DETECTED ABOVE ITS RESPECTIVE LABORATORY REPORTING LIMIT

LITHOLOGY

- FILL SAND
- GRAVEL
- SAND
- SAND/GRAVEL
- SILT
- SILTY SAND
- SILT/CLAY

CROSS SECTION B-B'
THIRD SITE
985 SOUTH U.S. HIGHWAY 421
ZIONSVILLE, INDIANA

RAMBOLL

FIGURE
4

DRAFTED BY: APR | DATE: 1/26/20 | 1690013634

C:_CAD\1690013634_Third Site_WIP\03_06_Cross Sections ABCD.dwg

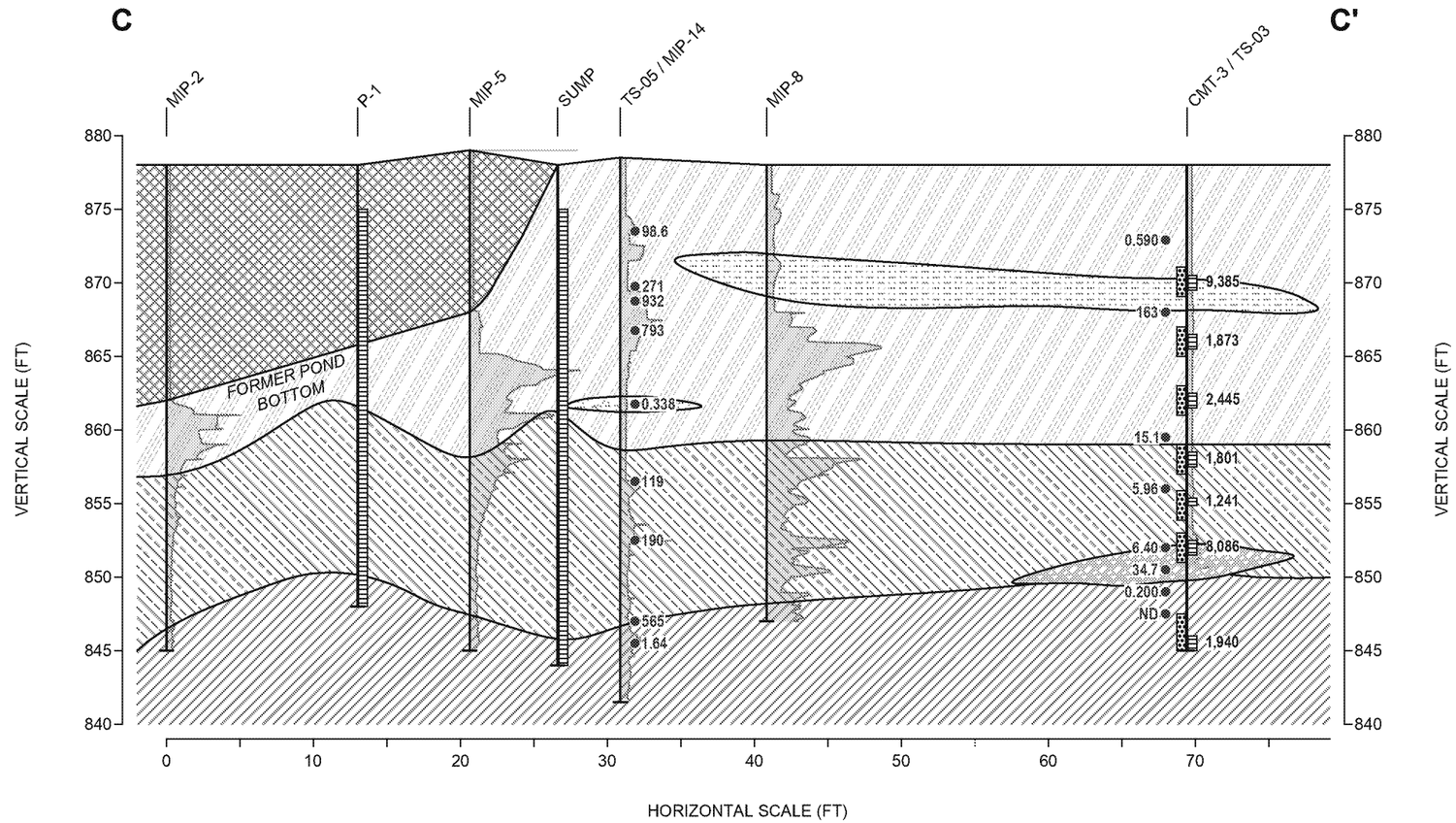

LEGEND

- SAND PACK INTERVAL
- SCREEN INTERVAL
- SOIL SAMPLE
- MEMBRANE INTERFACE PROBE (MIP) XSD SENSOR RESPONSE

0 — 4
XSD SCALE ($\mu V x 10^6$)

119 TOTAL VOC CONCENTRATION IN SOIL (mg/kg)

ND NO VOC WAS DETECTED ABOVE ITS RESPECTIVE LABORATORY REPORTING LIMIT

1,940 TOTAL VOC CONCENTRATION IN GROUNDWATER (ug/L)

LITHOLOGY

- FILL SAND
- GRAVEL
- SAND
- SAND/GRAVEL
- SILT
- SILTY SAND
- SILT/CLAY

CROSS SECTION C-C'
THIRD SITE
985 SOUTH U.S. HIGHWAY 421
ZIONSVILLE, INDIANA

RAMBOLL

FIGURE
5

DRAFTED BY: APR | DATE: 1/26/20 | 1690013634

C:_CAD\1690013634_Third Site_WIP\03_06_Cross Sections ABCD.dwg

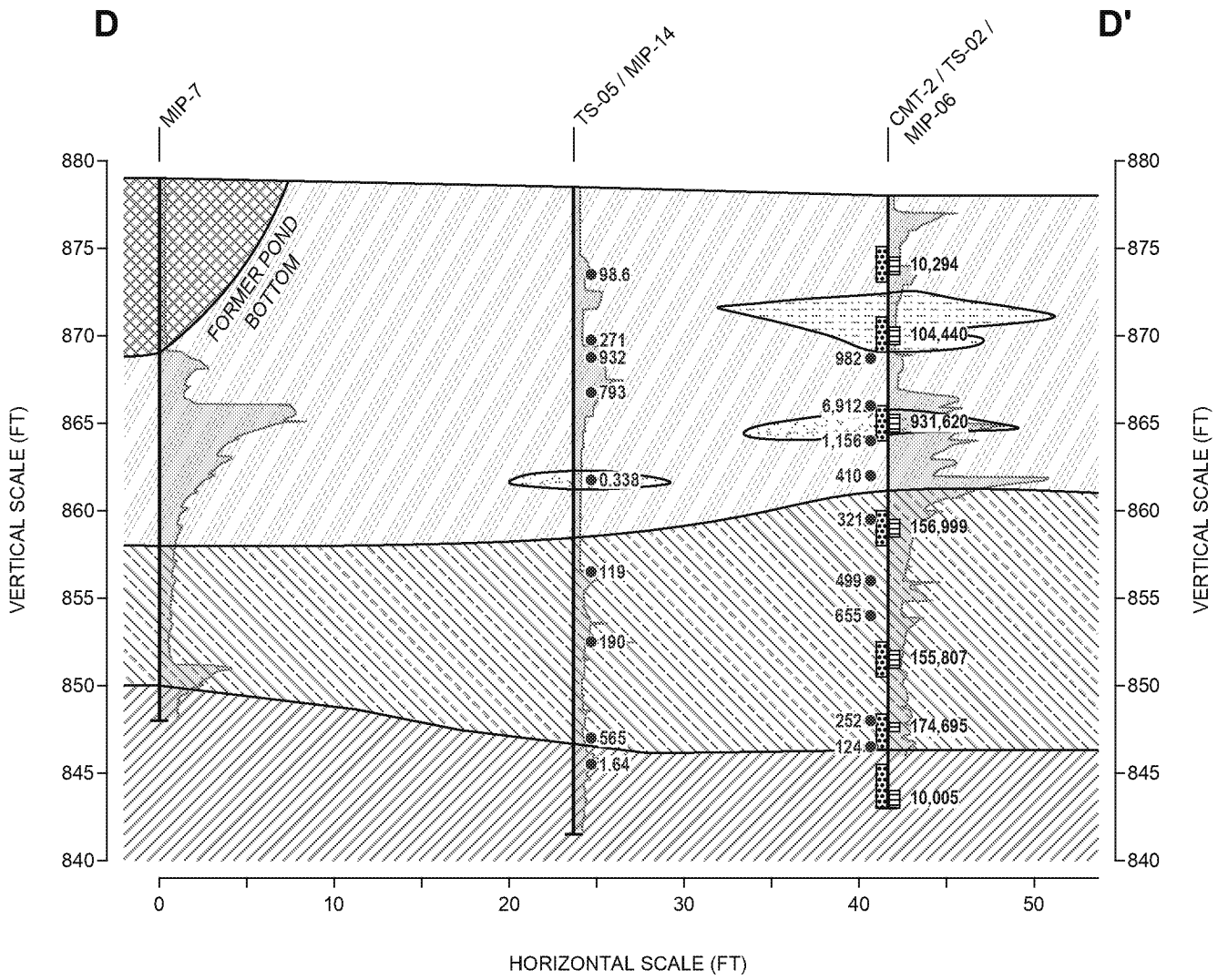

LEGEND

- SAND PACK INTERVAL
- SCREEN INTERVAL
- SOIL SAMPLE
- MEMBRANE INTERFACE PROBE (MIP) XSD SENSOR RESPONSE

0 — 4
XSD SCALE ($\mu V x 10^6$)

119 TOTAL VOC CONCENTRATION IN SOIL (mg/kg)

10,005 TOTAL VOC CONCENTRATION IN GROUNDWATER (ug/L)

LITHOLOGY

- FILL SAND
- GRAVEL
- SAND
- SAND/GRAVEL
- SILT
- SILTY SAND
- SILT/CLAY

RAMBOLL

DRAFTED BY: APR | DATE: 1/26/20

CROSS SECTION D-D'
THIRD SITE
985 SOUTH U.S. HIGHWAY 421
ZIONSVILLE, INDIANA

FIGURE
6

1690013634

C:_CAD\1690013634_Third Site_WIP\03_06_Cross Sections ABCD.dwg

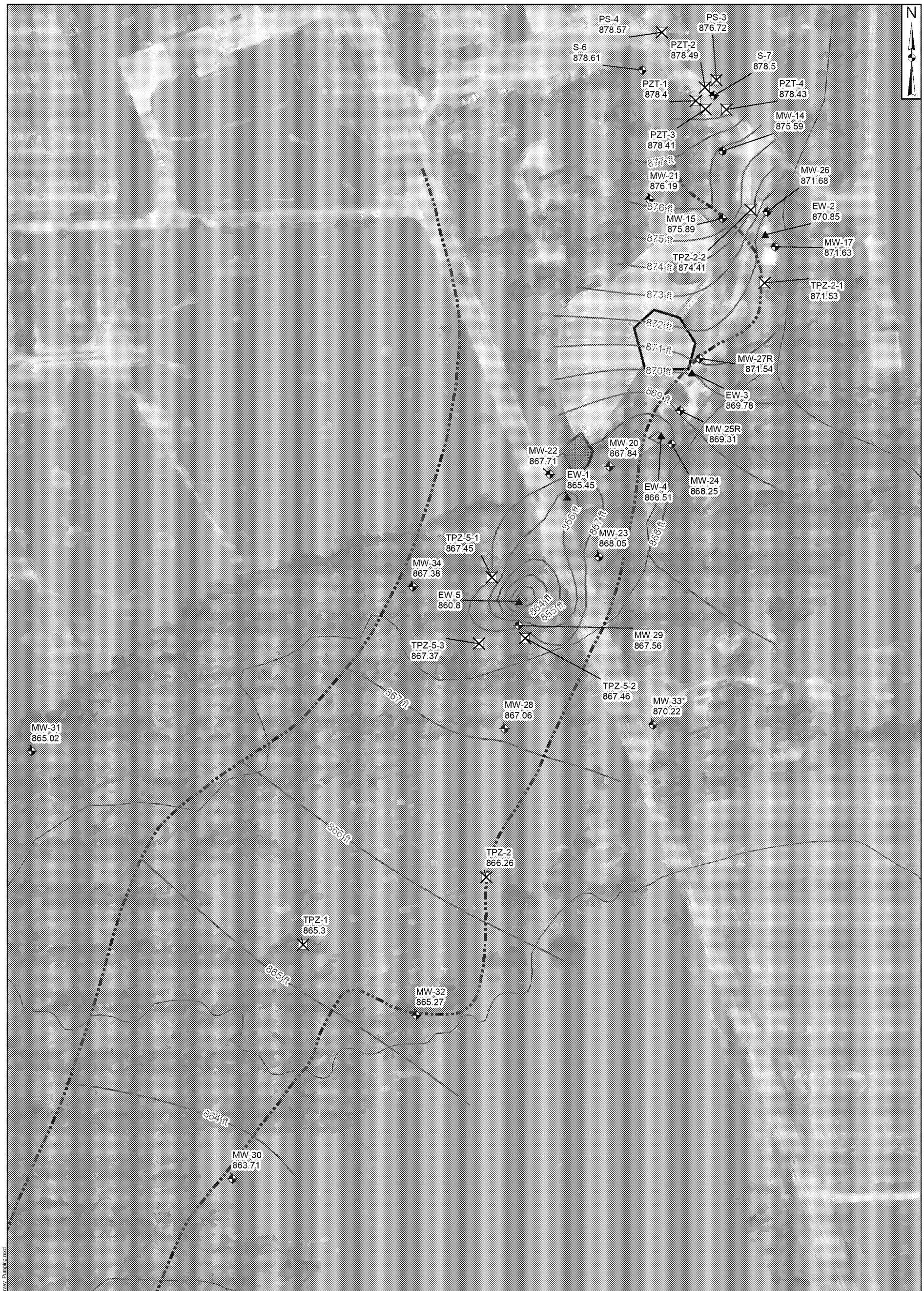

Legend

Groundwater Elevation when Pump & Treat System is Operational (ft msl)

- Monitoring Well
- Extraction Well
- Piezometer
- Approximate Position of the Paleolithic Channel
- Groundwater Contour (ft msl)
- DNAPL Containment Area
- SVE Area 1
- SVE Area 2
- Bankert Pond
- Creek

Notes:
DNAPL - dense non-aqueous phase liquid
ft msl - feet mean sea level
SVE - soil vapor extraction
* - Elevation excluded from groundwater contour interpolation due to geology contraints

1. Basemap Source: ESRI, DigitalGlobe, Geoeye, Earthstar, Geographics, CNES/Airbus DS, USDA, USGS, AEX, Getmapping, Aerogrid, IGN, IGP, swisstopo.
2. Groundwater elevations at MW-15 and MW-21 are calculated based on survey elevations listed in the Supplemental Predesign Investigation Technical Memorandum dated November 9, 1988.

Path: P:\PR\P\projects\TR0485 3rd site data review\Database and GIS\ThirdSite_Synoptic_Survey_Pumping.mxd

Coordinate System: NAD 1927 StatePlane Indiana West FIPS 1302

200 100 0 200 Feet

Groundwater Flow Regime Upper Sand and Gravel Unit (Operating Extraction System - Oct 9, 2017)

Third Site
985 South U.S. Highway 421
Zionsville, Indiana

Geosyntec consultants

Guelph | April 2019

Figure 7

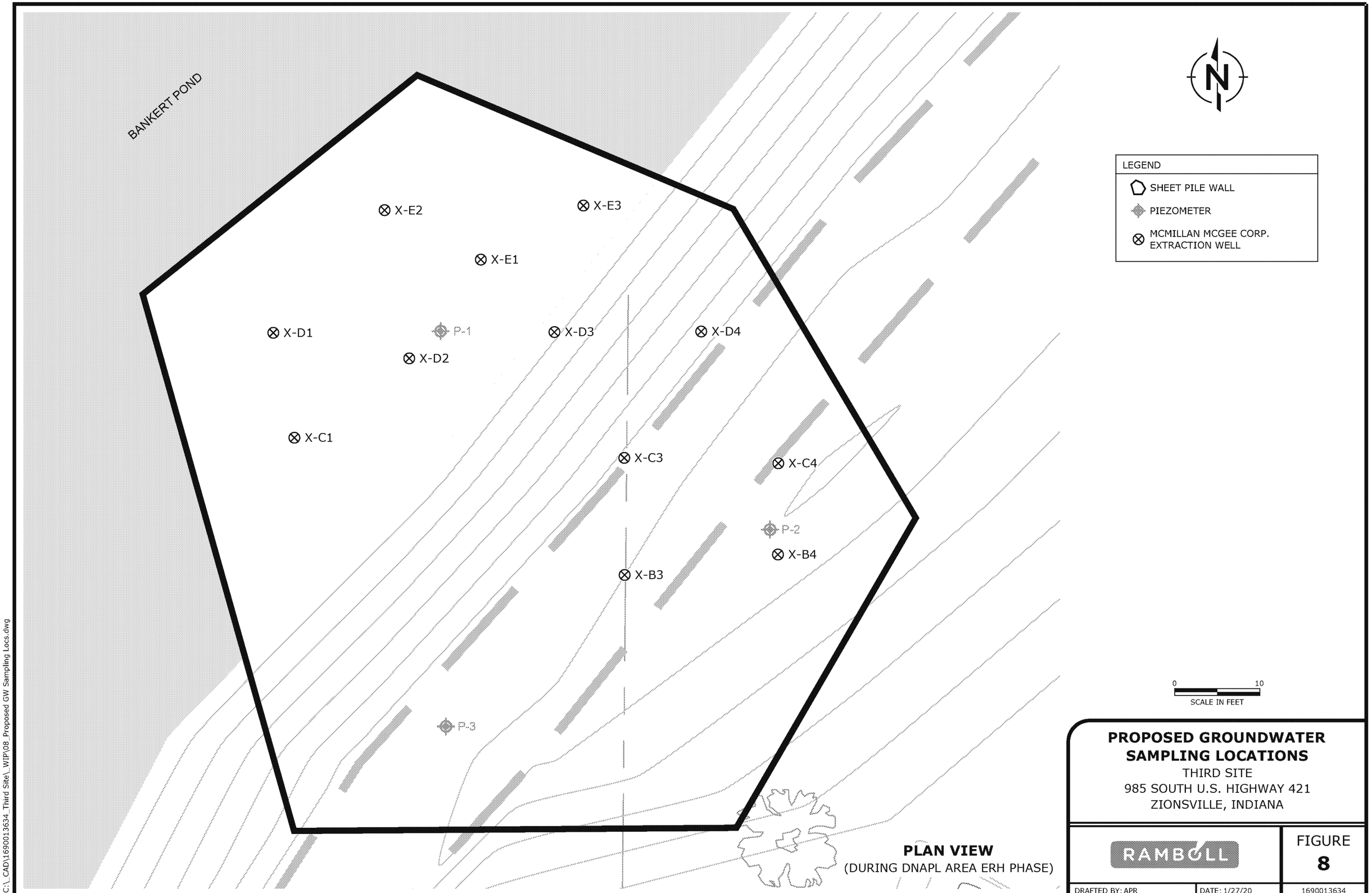
BANKERT POND
X-E2
X-E3
X-E1
X-D1
P-1
X-D3
X-D4
X-D2
X-C1
X-C3
X-C4
P-2
X-B4
X-B3
P-3
LEGEND
SHEET PILE WALL
PIEZOMETER
MCMILLAN MCGEE CORP. EXTRACTION WELL
0
10
SCALE IN FEET
PLAN VIEW
(DURING DNAPL AREA ERH PHASE)
PROPOSED GROUNDWATER SAMPLING LOCATIONS
THIRD SITE
985 SOUTH U.S. HIGHWAY 421
ZIONSVILLE, INDIANA
RAMBOLL
FIGURE
8
DRAFTED BY: APR
DATE: 1/27/20
1690013634
C:_CAD\1690013634_Third Site_WIP\08_Proposed GW Sampling Locs.dwg

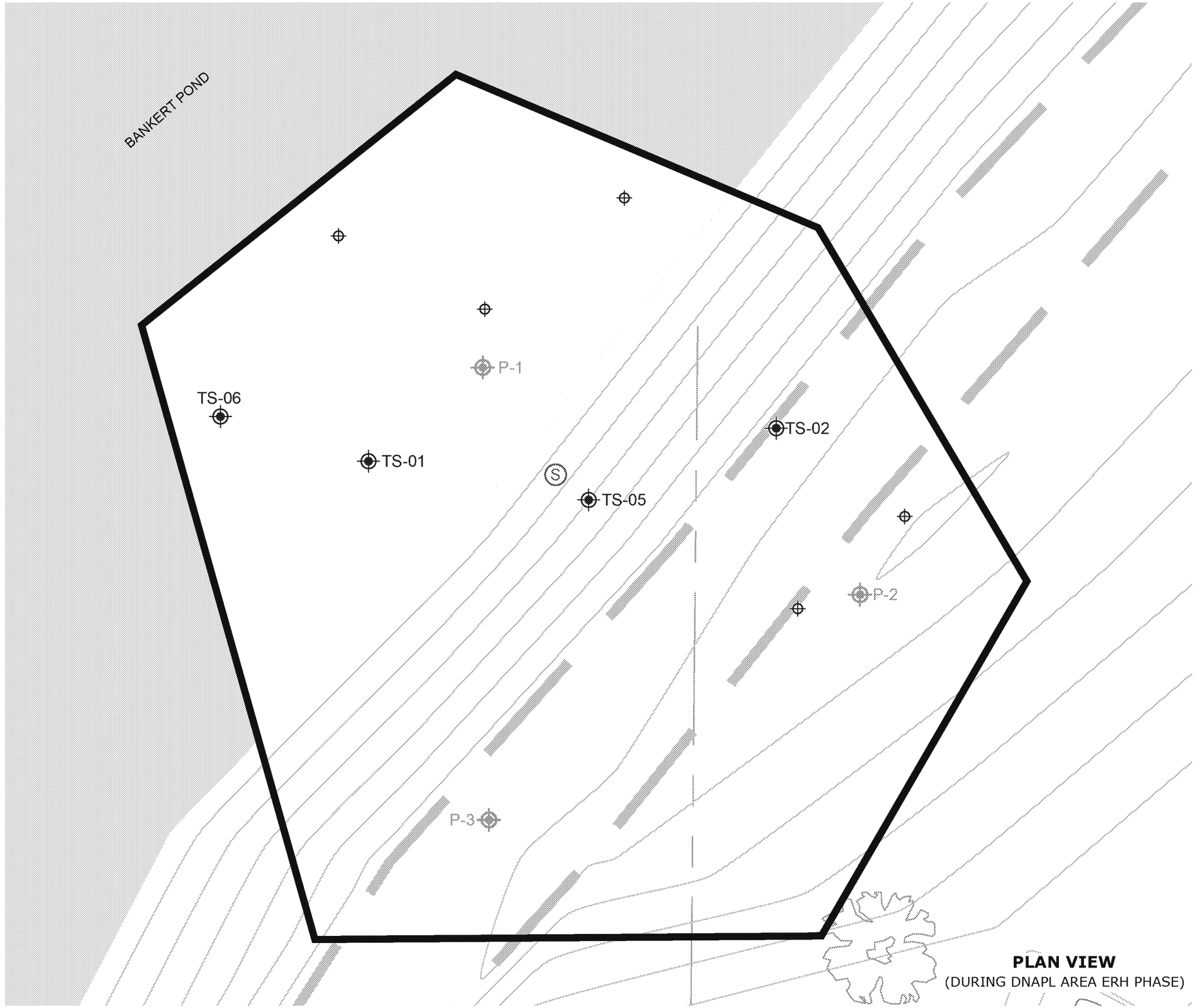

PLAN VIEW
(DURING DNAPL AREA ERH PHASE)

LEGEND

- SHEET PILE WALL
- PIEZOMETER
- EXTRACTION SUMP
- PROPOSED SOIL SAMPLE LOCATION
- 2014 SOIL BORING LOCATION

NOTE:

8 TO 14 ADDITIONAL SOIL SAMPLE LOCATIONS ARE PLANNED. THE FINAL LOCATIONS WILL BE DETERMINED BASED ON THE RESULTS OF THE PROPOSED GROUNDWATER SAMPLING (FIGURE 8).

0 10
SCALE IN FEET

PROPOSED SOIL SAMPLING PLAN
THIRD SITE
985 SOUTH U.S. HIGHWAY 421
ZIONSVILLE, INDIANA

RAMBOLL

FIGURE
9

DRAFTED BY: APR	DATE: 1/27/20	1690013634

C:_CAD\1690013634_Third Site_WIP\09_Proposed Soil Sampling Plan.dwg

Geosyntec consultants

TABLES

ED_012957A_00001240-00022

TABLE 1-*DRAFT*
Confirmation Groundwater Analytical Results (ug/L)
DNAPL Containment Area
Third Site Superfund Site, Zionsville, Indiana

LOCATION	P-1		P-2		P-3		SUMP	
COLLECTION DATE	3/29/2019	9/5/2019	3/29/2019	9/5/2019	3/29/2019	9/5/2019	3/29/2019	9/5/2019
1,1-Dichloroethane	208	355	<10	<5	<10	<5	<10	<5
1,1-Dichloroethene	<1	995	<10	<5	<10	<5	<10	<5
cis-1,2-Dichloroethene	<1	2,630	2,150	766	131	70.8	634	262
trans-1,2-Dichlorothene	<1	59.3	44.2	10.2	<10	<5	35.8	10.9
Tetrachloroethene	2,240	1,480	84.6	103	<10	<5	113	5.3
1,1,1-Trichloroethane	<1	<5	<10	<5	<10	<5	<10	<5
1,1,2-Trichloroethane	<1	<5	<10	<5	<10	<5	<10	<5
Trichloroethene	21,000	15,200	446	258	39.0	<5	653	250
Vinyl Chloride	64.5	28.0	14.3	6.1	<10	2.3	<10	<5
Acetone	106	<100	<200	<100	220	<100	222	<100
Chlorobenzene	3.4	<5	<10	<5	<10	<5	<10	<5
Chloroethane	<2	11.0	<10	<5	<20	<5	<10	<5
Chloroform	<1	<5	<10	<5	<10	<5	<10	<5
Chloromethane	<2	<5	<10	<5	<20	<5	<10	12.1
2-Chlorotoluene	20.3	8.0	<10	<5	<10	<5	<10	<5
1,2-Dichlorobenzene	16,600	8,710	2,380	3,170	92.7	8.4	1,060	420
1,3-Dichlorobenzene	2.9	<5	15.3	<5	<10	<5	<10	<5
1,4-Dichlorobenzene	140	45.6	15	19.2	<10	<5	<10	<5
Ethylbenzene	1,620	860	127	134	<10	<5	102	23.4
Isopropylbenzene (Cumene)	100	37.5	<10	9.8	<10	<5	<10	<5
Napthalene	10.4	2.8	<10	<5	<10	<5	<10	<5
n-Propylbenzene	17.2	7.8	<10	<5	<10	<5	<10	<5
Toluene	228	87.0	10.3	9.0	<10	<5	<10	<5
1,2,4-Trichlorbenzene	4.3	<5	<10	<5	<10	<5	<10	<5
1,2,4-Trimethylbenzene	17.5	7.5	<10	<5	<50	<5	<50	<5
1,3,5-Trimethylbenzene	6.4	<5	<10	<5	<50	<5	<50	<5
Xylene (Total)	5,290	2,540	292	360	<30	<10	291	105
Total VOCs	**47,679**	**33,065**	**5,579**	**4,845**	483	82	3,111	1,089
Performance Standards for ERH Treatment (Total VOCs)(1)	4,285							

NOTES:
1. Performance standards per Table 5 of the April 2018 Remedial Design Report prepared by McMillan-McGee Corp.
2. Samples analyzed using EPA Method 8260.
3. All results in microgram per liter (ug/L)
4. Bold indicates exceeds Performance Standards for ERH Treatment

Geosyntec consultants

ATTACHMENT 1:

Hydrasleeve Standard Operating Procedures

ED_012957A_00001240-00024

HYDRASleeve™

Simple by Design

US Patents No. 6,481,300; No. 6,837,120; others pending

Field Manual

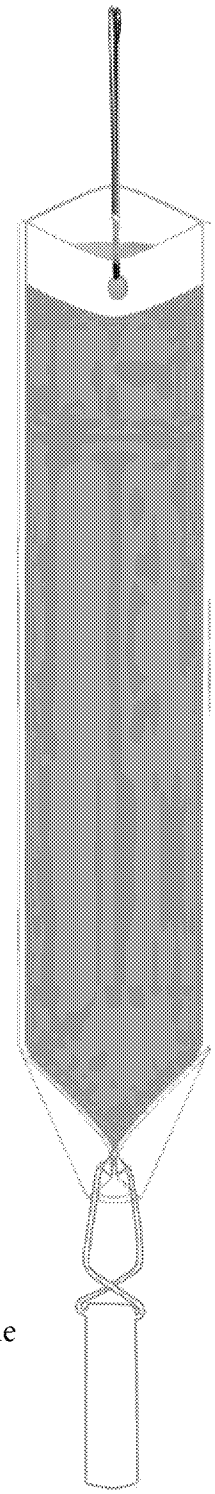

The HydraSleeve is a simple tool. In keeping with the Simple by Design motto, these are the basic instructions. Please call if you have any questions.
800-996-2225

©2016, GeoInsight

Introduction

Please read the manual in its entirety before sampling with HydraSleeve.

The HydraSleeve groundwater sampler can be used to collect a representative sample for most physical and chemical parameters without purging the well. It collects a whole water sample from a user-defined interval (typically within the well screen), without mixing fluid from other intervals. One or more HydraSleeves are placed within the screened interval of the monitoring well, and a period of time is allocated for the well to re-equilibrate. Hours to months later, the sealed HydraSleeve can be activated for sample collection. (Note: the new SpeedBags can be immediately deployed and recovered.) When activated by rapid upward motion, the check value opens and the HydraSleeve collects a sample with no drawdown and minimal agitation or displacement of the water column. Once the sampler is full, the one-way reed valve collapses, preventing mixing of extraneous, non-representative fluid during recovery. HydraSleeves go in flat and closed and come out full and closed.

Assembly

Assembling the HydraSleeve is simple, and can be done by one person in the field, taking only a minute or two.

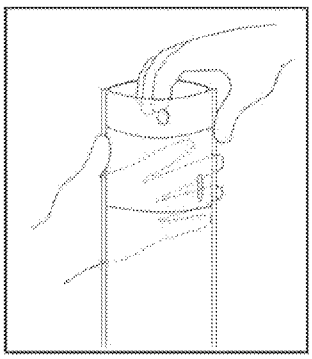

1

Remove HydraSleeve from package and grasp top to "pop" open.
Remember to save the discharge tube for later.

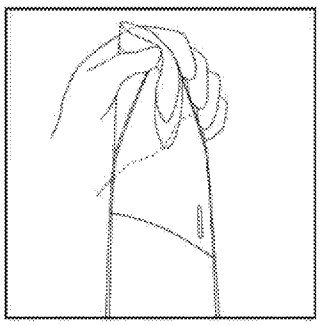

2

Squeeze side fins together at top to bend reinforcing strips outward.
Crimp the corners to remain open

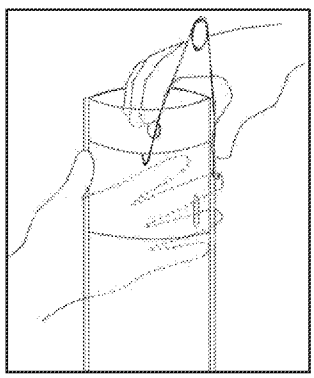

3 Preferred

Attach the tethered spring clip (see separate spring clip instructions); or

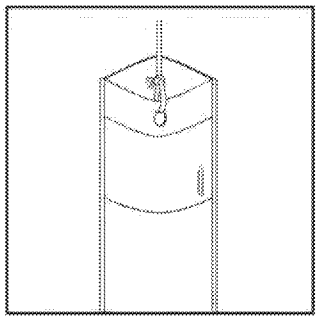

4 Option B

Alternatively attach the line to one side of the HydraSleeve if spring clips are not being used. Be sure the top is sharply crimped open.

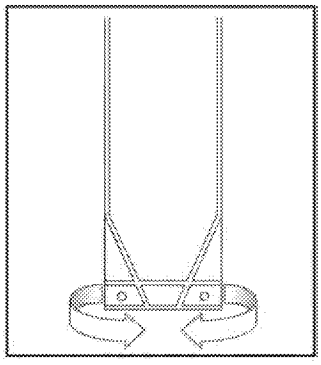

5

Align the two holes at bottom of HydraSleeve together and attach weight with the weight clip.

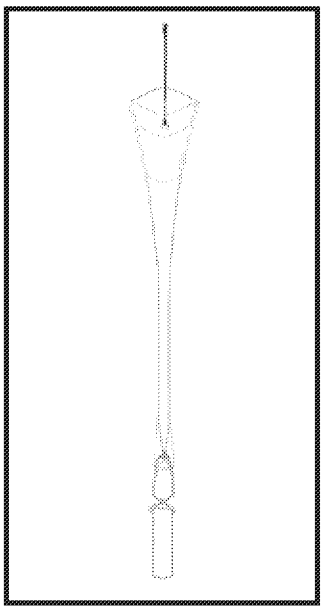

6

Sampler is ready to be placed in the well.

Placing the HydraSleeve(s)

To collect a representative groundwater sample without purging, the well usually needs to be allowed time to equilibrate after placement of the sampler. When any device is lowered into a well, some mixing of the water column occurs. The diameter of the device, how tightly it fits in the well, and its shape greatly affect the degree of mixing. The flat cross-section of the empty HydraSleeve minimizes the disturbance to the water column as the sampler is lowered into position, reducing the time needed for the well to return to equilibrium. Using a SpeedBag HydraSleeve eliminates equilibration time for most wells.
There are several methods for holding a HydraSleeve in position as the well equilibrates.
Most HydraSleeves and SuperSleeves are 3-5 feet long. The weight will go to the bottom of well but sample will come from upper half of well; because the sleeve will be suspended ~3-5 feet from the bottom up.

Most Common
TOP DOWN DEPLOYMENT (Figure 1)
Measure the correct amount of suspension line needed to "hang" the top of the HydraSleeve(s) at the desired sampling depth (in most cases, this will be at the bottom of the sampling zone). The upper end of the tether can be connected to the well cap to suspend the HydraSleeve at the correct depth until activated for sampling.
Note: For deep settings, it may be difficult to accurately measure long segments of suspension line in the field. Using our optional calibrated tether (marked sequentially in feet) will help solve this problem.

Figure 1

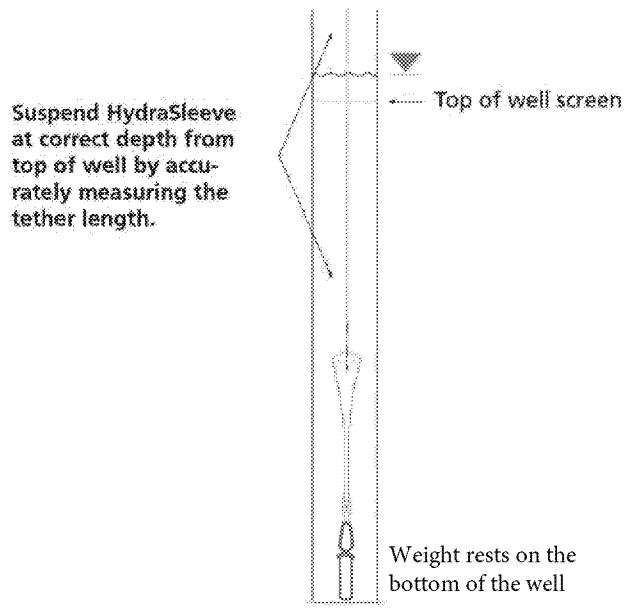

BOTTOM DEPLOYMENT (Figure 2)
Sound the well to determine the exact depth. Lower the weighted HydraSleeve into the well and let it rest on the bottom. The HydraSleeve sits suspended off the bottom & typically sample will be collected from the area directly above the top of the sleeve at this point without adjustment. Attach the suspension line to the top of the well to suspend it at this depth. (It is often easier to measure a few feet from the bottom of the well up to the sample point, than it is to measure many feet from the top of the well down.)

Figure 2

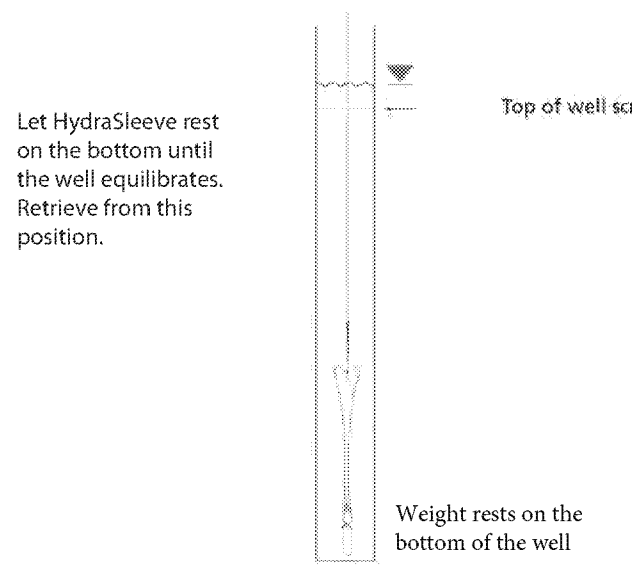

ED_012957A_00001240-00027

BOTTOM ANCHOR (Figure 3)
Determine the exact depth of the well. Calculate the distance from the bottom of the well to the desired sampling depth. Attach an appropriate length anchor line between the weight and the bottom of the sampler and lower the assembly until the weight rests on the bottom of the well, allowing the top of the sampler to float at the correct sampling depth.

Figure 3

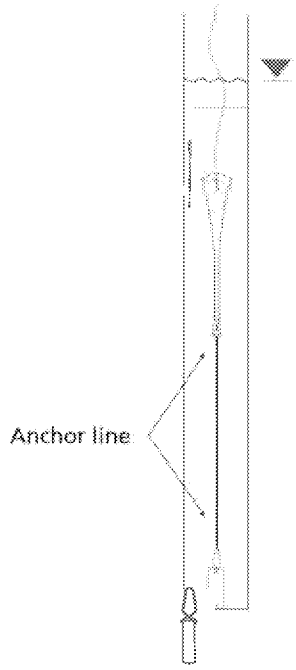

TOP WEIGHTED ASSEMBLIES (Figure 4)
Using a top weight for short water collumns will compress the HydraSleeve into the bottom of the well. This allows for sample collection to begin at the lowest point possible. It provides for more saturated screen above the check valve from which to collect the sample. Insert the top wighted assembly into the well. Allow it to reach the bottom. Be sure to leave enough slack (at least the length of the sampler) so that there is enough tether to allow the HydraSleeve to compress over a period of time. The length of time and compression area are determined by the type and size of HydraSleeve being used.

Figure 4

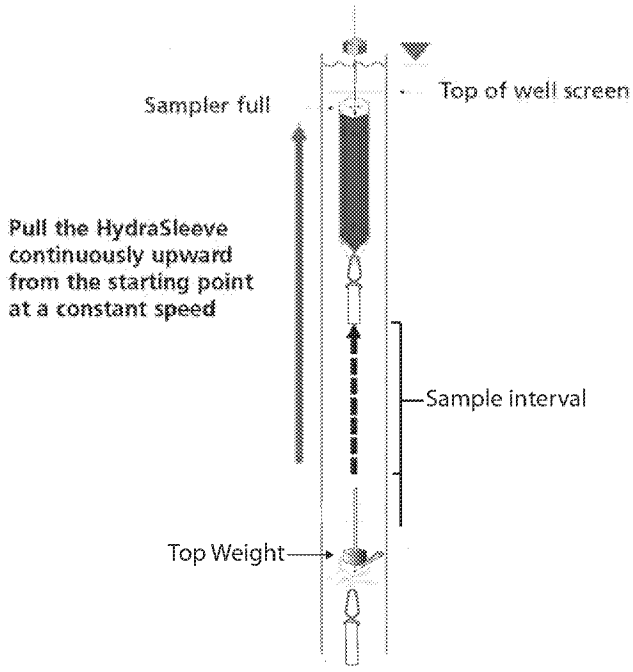

ED_012957A_00001240-00028

Multiple Interval Deployment

There are 3 basic methods for placing multiple HydraSleeves in a well to collect samples from different levels simultaneously.

ATTACHED TO A SINGLE TETHER (Figure 5)
To use 3 or more samplers simultaneously, we recommend attaching them all to a tether for support to prevent the sampling string from pulling apart. The weight is attached to a single length of suspension line and allowed to rest on the bottom of the well. The top and bottom of each HydraSleeve are attached to the tether at the desired sample intervals. Cable tie or stainless steel clips (optional) work well for attaching the HydraSleeves to the line. Simply push one end of the clip between strands of the rope and tie a knot at the desired point before attaching the clip to the HydraSleeve.

Note: if many HydraSleeves are attached to a tether, more bottom weight will be required than with a single sampler.

Figure 5

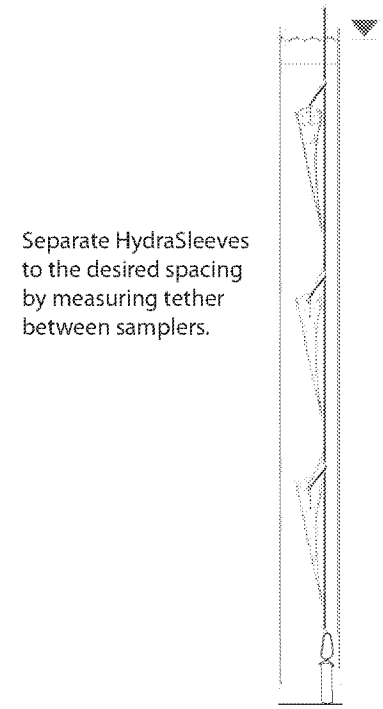

ATTACHED TO A SINGLE TETHER WITH A TOP WEIGHT ON THE BOTTOM (Figure 6)
Attach the HydraSleeves in the same manner as figure 5 but put a top weight on the bottom HydraSleeve. Remember to leave enough slack in the tether (at least the length of the bottom sleeve) so the assembly can be compressed into the bottom of the well.

Figure 6

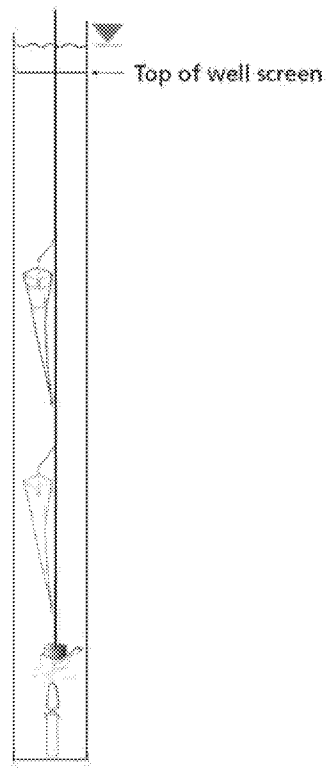

ED_012957A_00001240-00029

ATTACHED END TO END (Figure 7)
To place 2 stacked HydraSleeves for vertical profiling, use one of the methods described above to locate where you want to place the bottom sampler. Attach the bottom of the top sampler to the top of the following HydraSleeve with a carefully measured length of suspension cable. Connect the weight to the bottom sampler. Heavier bottom weight will be required for this application.

Figure 7

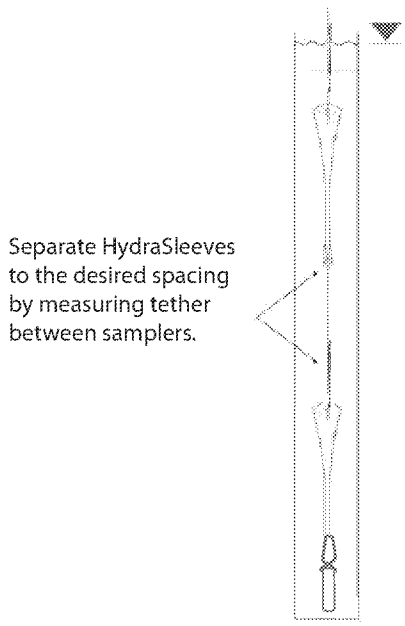

NOTE: If multiple sleeves are being used soley to provide additional sample volume, consider a single longer (often top-weighted) custom sleeve instead of multiple shorter sleeves. It's simpler and more reliable.

ED_012957A_00001240-00030

Sample Collection

The HydraSleeve must move upward at a rate of one foot per second or faster (about the speed a bailer is usually pulled upward) for water to pass through the check valve into the sample sleeve. For most applications the HydraSleeve will fill within the length of the sampler. For example, a 30-inch HydraSleeve needs a total upward movement of 30 inches to fill.
There are times when the total upward distance the check valve must travel to fill the sample sleeve is longer. When using a smaller sleeve diameter in a larger diameter well the pull-to-fill distance will be longer. The upward motion can be accomplished using one of several variations of cycling or long continuous pull or any combination that moves the check valve the required distance within the saturated screen zone in the open position.

To ensure the Hydrasleeve is full and check valve closed we recommend one of the cycling methods is followed see below.

CONTINUOUS PULL (Figure 8)
Pull the HydraSleeve continuously upward from its starting point at a constant 1 to 2 feet per second until full. This method is analogous to coring the water column from the bottom up.

Note: When using this method, the screen interval must be long enough so the sampler fills before exiting the top of the screen. Fill rate is dependent on the sleeve being sized for the well diameter. 2-inch sleeves for 2-inch wells. 4-inch sleeves for 4-inch wells. If using undersized sleeves please use a cycling method to assure the sleeve fills in the screened interval.

CYCLING THE SLEEVE (Figure 9)
Pull the sampler upward at about 1 to 2 feet or the length of the sampler and let it drop back to the starting point. Repeat the cycle 3 to 5 times.
This method provides a shorter sampling interval than the continuous pull method (above), and usually reduces the turbidity levels of the sample below that of numerous rapid, short cycles. The sample comes from between the top of the cycle and the top of the check valve at its resting point.

Figure 8

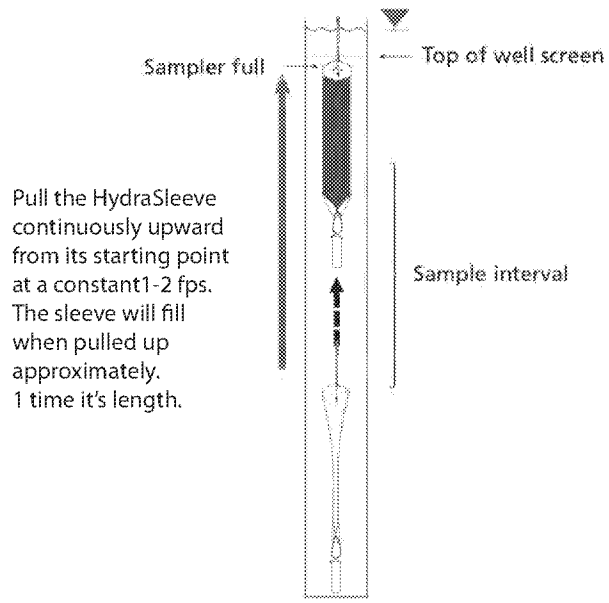

Figure 9

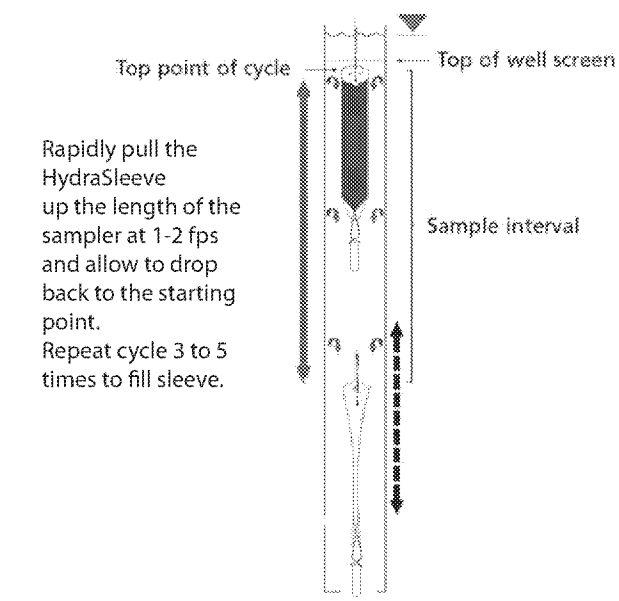

ED_012957A_00001240-00031

Sample Discharge

The best way to remove a sample from the HydraSleeve with the least amount of aeration and agitation is with the short plastic discharge tube (included).

First, squeeze the full sampler just below the top to expel water resting above the flexible check valve. **(Fig. 10, top right)** Fold the stiffeners over to make sure all of the water is off the top of the check valve.

Then, push the pointed discharge tube through the outer polyethylene sleeve as desired but at least 3-4 inches below the white reinforcing strips. **(Fig. 11, middle right)**

Note: For some contaminants (VOC's/sinkers) the best location for discharge is the middle to bottom of the sampler. This would be representative of the deeper portion of the well screen.

Discharge the sample into the desired container.**(Fig. 12, bottom right)**

Raising and lowering the bottom of the sampler or pinching the sample sleeve just below the discharge tube will control the flow of the sample. The sample sleeve can also be squeezed, forcing fluid up through the discharge tube, similar to squeezing a tube of toothpaste. With a little practice, and using a flat surface to set the sample containers on, HydraSleeve sampling becomes a one-person operation.

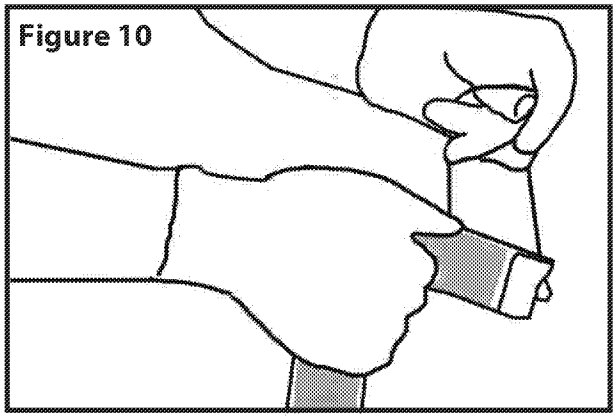
Figure 10

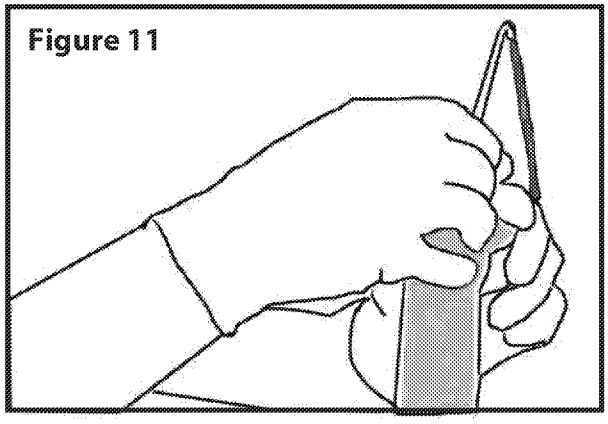
Figure 11

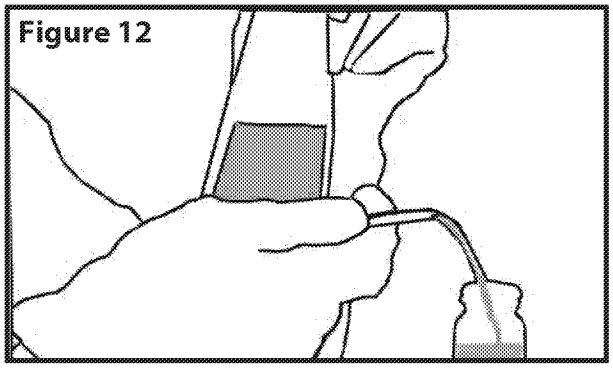
Figure 12

2007 Glass Road • Las Cruces, NM 88005
Phone: 1.800.996.2225 • 1.575.523.5799 • Fax: 1.575.523.0789
www.hydrasleeve.com info@hydrasleeve.com

Geosyntec consultants

130 Stone Road West
Guelph, Ontario N1G 3Z2
PH 519.822.2230
FAX 888.635.3470
www.geosyntec.com

Memorandum

Date: 13 Mach 2020

To: Matthew J. Ohl, USEPA

Copies to: Norman W. Bernstein – N.W. Bernstein & Associates, LLC
Peter M. Racher – Plews Shadley Racher & Braun LLP

From: Suzanne O'Hara and Chris Gale, Geosyntec Consultants, Andrew Gremos Ramboll

Subject: Addendum to the Dense Non-Aqueous Phase Liquid (DNAPL) Containment Area Sampling Work Plan

---

On behalf of the Trustee of the Third Site Trust Fund, Geosyntec Consultants (Geosyntec) with the assistance of Ramboll have prepared this addendum to the Dense Non-Aqueous Phase Liquid (DNAPL) Containment Area Sampling Work Plan (Work Plan) for the Third Site (or Site) located at 985 S. US Highway 421 in Zionsville, Indiana. This addendum provides information on collecting groundwater samples from the soil core boreholes from below 40 feet below. ground surface (ft bgs). In addition, we have provided clarification on the procedures for screening the boreholes for the presence of DNAPL and the plan should DNAPL be encountered in a borehole.

PURPOSE

The purpose of the proposed work is to further evaluate the distribution of contaminants within the Upper Till, the Upper Sand and Gravel Unit and the top portion of the Lower Till in the DNAPL containment area following the electrical resistance heating (ERH) treatment work conducted by McMillan McGee (MM). The data to be collected will aid in determining the failure mechanisms of the ERH treatment (groundwater concentrations exceed performance metrics in compliance monitoring wells P-1 and P-2). Results from the proposed investigations presented in the Work Plan and herein will inform recommendations for potential future remedial actions. This addendum provides procedures:

- for attempting to collect groundwater samples from 40 to 46 ft bgs; and,

- for screening the soil cores collected from ground surface to a depth of 46 ft bgs and what will be done if DNAPL is encountered.

SCOPE OF WORK

The investigation activities presented in the Work Plan include water level gauging and sampling of existing ERH extraction and performance monitoring wells (Geosyntec, DNAPL Containment Area Sampling Work Plan, February 10, 2020), followed by adaptive field investigation activities using a direct push technology (DPT) drill rig or mini sonic drill rig to collect soil cores for laboratory analysis of VOCs.

Soil cores are more likely to provide a depth discrete profile of contaminant concentrations through the target treatment depth than depth discrete groundwater samples due to the low permeability of the Upper and Lower Tills. Continuous core soil samples will be collected to a depth of 46 ft bgs using either DPT or sonic drilling technologies from at least eight (8) borings locations and up to as many as 14 boring locations. The results of the grab groundwater samples will be used to evaluate potential additional locations for discrete soil sampling.

Continuous core soil samples will be collected from ground surface to a target depth of approximately 46 feet below ground surface (ft bgs). If the DPT rig cannot achieve the target depth of 46 ft bgs, a compact sonic drill rig may be mobilized to achieve the target depth. Soil cores will be screened in the field with a photoionization detector (PID) for the presence of VOCs. One soil sample will be collected from each 5-ft soil core from the portion of the core with the greatest PID response and retained for laboratory analysis. Soil samples will be collected into laboratory provided clean 8 oz glass jars, sealed, placed in sealed plastic bags, and stored on ice for transport to the analytical laboratory under chain of custody procedures. Soil samples will be submitted for analysis of VOCs by EPA method 8260B.

If soil cores from any boring and from any depth exhibit elevated PID readings (> 500 ppm) or there are any visual observation of DNAPL in the soil (oily phase on gloves or core liners, separate phase observed in soil pore spaces) the borehole will be terminated at the depth at which DNAPL is observed and the borehole filled with hydrated bentonite or grout to surface.

Both coring methods proposed, dual tube DPT or mini sonic rig, advance an outer casing that remains downhole while the core is retrieved from the casing. Therefore, the base of the borehole remains isolated from the upper, previously cored, depth intervals. It is proposed that once the final core is collected from a depth of 46 ft bgs, the outer casing of the drill rig will be retracted to approximately 40 ft bgs to expose the bottom 6 ft of the borehole to facilitate

collection of groundwater samples from within the upper portion of the Lower Till. An attempt will be made at that time to collect a groundwater sample from 40-46 ft bgs using either a temporary well screen lowered through the casing or a groundwater grab sampler such as a Geoprobe SP22 sampler. The depths to which the outer casing is retracted may be adjusted based on field observations (i.e., to just above the depth of any potentially higher permeability layers within the upper portions of the Lower Till). A water level tape will be used to determine if there is groundwater entering the borehole and the boring will be allowed to sit for up to three hours to see if there is sufficient water to collect a sample. If there is insufficient groundwater in the boring after three hours the borehole will be abandoned by filling it with hydrated bentonite or grout. If there is sufficient groundwater, a sample will be collected for analysis of VOCs by EPA method 8260B. Sample handling and laboratory analysis will be performed in accordance with the procedures and limits presented in the Site Quality Assurance Project Plan (ENVIRON 2013). The borehole will be abandoned after collection of a groundwater grab sample by back filling the borehole with hydrated bentonite or grout.

REFERENCES

Environ 2013. QAPP Addendum = *Quality Assurance Project Plan Addendum, Third Site, Zionsville, Indiana*. Submitted to: USEPA, Region 5. On behalf of: Third Site Trustees. Prepared by: ENVIRON. Dated February 2013.

* * * * *

Jessica Contos

From: Suzanne OHara <SOHara@Geosyntec.com>
Sent: Friday, March 27, 2020 2:43 PM
To: Ohl, Matthew
Cc: Christopher Gale; Andrew A Gremos; Norman Bernstein; Peter Racher; Douglas Petroff; Mark Nichter; Krueger, Thomas; Mary Desmond
Subject: RE: Addendum to Third Site - DNAPL Containment Area Sampling Work Plan
Attachments: March 27 2020 Memo DNAPL Containment Area _Response to EPA email to proceed.pdf

Matt

Please find attached a memo presenting the Trust's response to your email below. If you have any further concerns, please let us know. Otherwise we will proceed pursuant to the approval provided.

Regards,

Suzanne

Suzanne O'Hara. MSc., P.Geo. (ON), P.G. (NY)
Senior Hydrogeologist
Geosyntec Consultants, Inc.
130 Stone Road West
Guelph, ON N1G 3Z2
Office Phone: 519.822.2230
Direct Dial Phone: 519.515.0865
Mobile: 519.830.7855

GEOSYNTEC | SIREM | SAVRON

Follow Us – LinkedIn | Twitter | Facebook | YouTube

From: Ohl, Matthew <ohl.matthew@epa.gov>
Sent: Wednesday, March 25, 2020 9:30 AM
To: Suzanne OHara <SOHara@Geosyntec.com>
Cc: Christopher Gale <CGale@Geosyntec.com>; Andrew A Gremos <agremos@ramboll.com>; Norman Bernstein <nwbernstein@nwbllc.com>; Peter M. Racher Esq. <pracher@psrb.com>; Douglas Petroff <DPetroff@idem.IN.gov>; Mark Nichter <Mark.W.Nichter@usace.army.mil>
Subject: RE: Addendum to Third Site - DNAPL Containment Area Sampling Work Plan

Suzanne:

Thank you for providing the attached DNAPL Area Sampling Plans/Addendum. EPA and IDEM have reviewed the work plan and addendum. We are providing approval to proceed with the proposed work and requesting the following additional work:

- groundwater profiling to a minimum depth of 46 ft. where concentrations of VOCs exceed 1) cleanup values in groundwater samples from a nearby piezometer/monitoring well/thermal well and 2) elevated soil concentrations in a new direct-push borehole;
- historical information for vertical hydraulic gradients within the DNAPL Containment Area;
- collecting groundwater samples using Hydrasleeves in case there is neutrally buoyant NAPL present in the water column and/or a greater quantity of water is needed, and analyzing groundwater samples for a full suite of analysis using EPA Methods 8260 and 8270; and
- reporting should include a discussion of potential alternate remedial technologies and enhancements of the existing ERH system.

Please initiate this work by April 30, 2020.

Thank you,

Matt

Matthew J. Ohl
Remedial Project Manager
United States Environmental Protection Agency
77 West Jackson Boulevard, SR-6J
Chicago, IL 60604-3590

phone: 312.886.4442
fax: 312.692.2447
e-mail: ohl.matthew@epa.gov

From: Suzanne OHara <SOHara@Geosyntec.com>
Sent: Friday, March 13, 2020 2:03 PM
To: Ohl, Matthew <ohl.matthew@epa.gov>
Cc: Christopher Gale <CGale@Geosyntec.com>; Andrew A Gremos <agremos@ramboll.com>; Norman Bernstein <nwbernstein@nwbllc.com>; Peter M. Racher Esq. <pracher@psrb.com>
Subject: Addendum to Third Site - DNAPL Containment Area Sampling Work Plan

Matt
Please find attached an addendum to the Third Site - DNAPL Containment Area Sampling Work Plan.

Please let us know if you have any questions or concerns.

Suzanne

From: Suzanne OHara
Sent: Thursday, February 27, 2020 3:55 PM
To: Ohl, Matthew <ohl.matthew@epa.gov>
Cc: Gary Wealthall <GWealthall@Geosyntec.com>; Christopher Gale <CGale@Geosyntec.com>; Andrew A Gremos <agremos@ramboll.com>; Norman Bernstein <nwbernstein@nwbllc.com>; Peter M. Racher Esq. <pracher@psrb.com>
Subject: Response to Comments from McMillian McGee's February 21 2020 Letter Identifying Concerns with Geosyntec's Proposed Sampling Plan

Matt
Attached is a memo providing our responses to the comments from McMillian McGee on the proposed sampling plan for the Third Site DNAPL Containment Area Sampling Work Plan. Please let us know if you have any questions on these responses.

Suzanne

Suzanne O'Hara. MSc., P.Geo. (ON), P.G. (NY)
Senior Hydrogeologist
Geosyntec Consultants, Inc.
130 Stone Road West
Guelph, ON N1G 3Z2
Office Phone: 519.822.2230
Direct Dial Phone: 519.515.0865
Mobile: 519.830.7855

GEOSYNTEC | SIREM | SAVRON

Follow Us – LinkedIn | Twitter | Facebook | YouTube

Geosyntec consultants

130 Stone Road West
Guelph, Ontario N1G 3Z2
PH 519.822.2230
FAX 888.635.3470
www.geosyntec.com

Memorandum

Date:	27 March 2020
To:	Matthew J. Ohl, USEPA
Copies to:	Norman W. Bernstein – N.W. Bernstein & Associates, LLC Peter M. Racher – Plews Shadley Racher & Braun LLP
From:	Suzanne O'Hara and Chris Gale, Geosyntec Consultants, Andrew Gremos Ramboll
Subject:	Response to EPA Notice to Proceed Email March 25, 2020

The following provides the Trust's response to the email from Matt Ohl from March 25, 2020 providing approval to proceed with the proposed work in the DNAPL containment area as outlined in Geosyntec's workplan dated February 10, 2020 and its addendum dated March 13, 2020 and requesting the following additional work:

1. groundwater profiling to a minimum depth of 46 ft. where concentrations of VOCs exceed 1) cleanup values in groundwater samples from a nearby piezometer/monitoring well/thermal well and 2) elevated soil concentrations in a new direct-push borehole;
2. historical information for vertical hydraulic gradients within the DNAPL Containment Area;
3. collecting groundwater samples using Hydrasleeves in case there is neutrally buoyant NAPL present in the water column and/or a greater quantity of water is needed, and analyzing groundwater samples for a full suite of analysis using EPA Methods 8260 and 8270; and
4. reporting should include a discussion of potential alternate remedial technologies and enhancements of the existing ERH system.

Responses are presented below.

1. The work outlined in the work plan and addendum is intended to characterize the distribution of contaminant mass within the DNAPL Containment Area. We understand that additional groundwater characterization may be required. Previous work within this area indicates that a combination of equipment may be required for any groundwater profiling. We do not believe that any type of groundwater profiling tool will be able to be direct pushed to a depth greater than approximately 35 ft bgs based on the MIP profiling that was conducted at the Site in 2014 (ENVIRON DNAPL Containment Area

Supplemental Data Collection Report, Third Site Superfund Site, Zionsville, Indiana. November 1, 2014). Each of the MIP borings was advanced until refusal was encountered, with the majority encountering refusal at approximately 30 ft bgs with the deepest being advanced to approximately 37 ft bgs. We will use the data from the groundwater samples collected from wells and boreholes and the soil samples to target collection of additional groundwater samples at a later mobilization, as necessary, from depths with elevated soil concentrations that would indicate possible DNAPL presence.

2. As requested, historical information for vertical hydraulic gradients within the DNAPL Containment Area is as follows. Groundwater gauging data collected from monitoring wells MW-19A and MW-19B, installed by CH2MHill in 1988, provide historical information for vertical hydraulic gradients within the DNAPL Containment Area. The locations of MW-19A and MW-19B are shown on Figure 2-New Monitoring Well Locations[1] map provided in Attachment A. Monitoring well MW-19A was screened within the Upper Till Unit and MW-19B was screened within the Sand and Gravel Unit. Construction records for these two monitoring wells are provided on Figure 6-Monitoring and Observation Well Construction Diagram[2] located in Attachment B. A cross-section (Cross-section A-A' (1999 Borings))[3] illustrating the geologic setting of these two monitoring wells is also provided in Attachment B.

   Groundwater gauging data are available for MW-19A and MW-19B from April 1988 and December 1999. These monitoring wells were subsequently decommissioned as a part of the Third Site Non-Time Critical Removal Action prior to construction activities in the DNAPL Containment Area[4].Groundwater gauging data from 1988 is shown on Table 3-Groundwater Elevations5 provided in Attachment C. Gauging data collected in December

---

[1] Figure 2-New Monitoring Well Locations map is from the ENVIRON February 2003 Pre-Design Data Report for the Non-Time Critical Removal Action, Third Site, Zionsville, IN

[2] Figure 6-Monitoring and Observation Well Construction Diagram is from the CH2MHill November 1988 Technical Memorandum 2, Geotechnical, Hydrogeological, and Supplemental Pre-Design Investigation for the Northside Landfill/ECC Superfund Site, Zionsville, IN

[3] Figure 4-Cross-Section A-A' (1999 Soil Borings) is from the ENVIRON October 2000 Engineering Evaluation/Cost Analysis, Third Site, Zionsville, IN

[4] Section II C1, March 2004 Design Report for Non-Time Critical Removal Action-Revision 2, Third Site, Zionsville, IN

[5] Table 3-Groundwater Elevations is from the CH2MHill November 1988 Technical Memorandum 2, Geotechnical, Hydrogeological, and Supplemental Pre-Design Investigation for the Northside Landfill/ECC Superfund Site, Zionsville, IN

1999 is shown on Table B-2 Field Measurements and Purge Data[6] which is also provided in Attachment C. The groundwater gauging data collected in April 1988 show a slight upward hydraulic gradient of -0.3 feet (871.1 feet elevation minus 871.4 feet elevation). Data collected in December 1999 show a slight downward hydraulic gradient of 0.4 feet (871.4 feet elevation minus 871 feet elevation). No consistent vertical hydraulic gradient is apparent from these data.

3. As requested, the groundwater samples from the existing wells will be sampled using Hydrasleeves. Groundwater samples will be submitted for laboratory analysis to Pace Analytical of Indianapolis, Indiana for a full suite of analysis using EPA Method 8260. The Consent Decree, Enforcement Action Memorandum, and remedy design for the sheet pile enclosed DNAPL area all reference only a reduction of 90% in total VOCs as the cleanup objective. EPA's Method 8270 is for SVOCs. SVOCs are not relevant to any of the cleanup objectives for the sheet pile enclosed DNAPL area and analyzing for these may cause confusion and unnecessary contractual disputes with the Trust's contractor. The full suite of VOCs will be analyzed for using EPA Method 8260, including 1,2-Dichlorobenzene.

4. As requested, the report prepared to summarize methods and results of this investigation will include a discussion of potential alternate remedial technologies and enhancements of the existing ERH system.

If you have any further concerns, please let us know. Otherwise we will proceed pursuant to the approval provided.

* * * * *

[6] Table B-2 Field Measurements and Purge Data is from the ENVIRON January 2000 Field Sampling Data Report for Third Site, Zionsville, IN