Geosyntec consultants

engineers | scientists | innovators

Third Site MW-27R Confirmation Sampling Work Plan Draft

Prepared for

Matthew J. Ohl.
USEPA

Prepared by

Geosyntec Consultants International Inc.
130 Stone Road West
Guelph, Ontario N1G 3Z2

Project Number TR0485D

April 2020

Geosyntec consultants

TABLE OF CONTENTS

1. INTRODUCTION 1
   1.1 Purpose 1
   1.2 Objectives 2
   1.3 Organization 2

2. BACKGROUND 2

3. SCOPE OF WORK 4
   3.1 Groundwater Sampling 4
   3.2 Discrete Soil Sampling 4

4. SCHEDULE 5

5. REFERENCES 6

LIST OF TABLES

Table 1: Groundwater Monitoring Analytical Results Summary (ug/L)

LIST OF FIGURES

Figure 1: Site Map and Monitoring Well Network

LIST OF ATTACHMENTS

Attachment A: Well completion logs

Attachment B: Field Notes from MW-27R Reinstallation

1. INTRODUCTION

On behalf of the Trustee of the Third Site Trust Fund, Geosyntec Consultants (Geosyntec) with the assistance of Ramboll have prepared this MW-27R Area Sampling Work Plan for the Third Site (or Site) located at 985 S. US Highway 421 in Zionsville, Indiana (**Figure 1**). This work plan outlines the field activities required to confirm the lack of dense non-aqueous phase liquid (DNAPL) source material or residual contamination that may potentially warrant concern down to a depth of 22 feet below ground surface (ft bgs) in the area of monitoring well MW-27R and to confirm the status of ERH completion in the Additional Thermal Treatment (ATT) area in accordance with applicable remediation requirements.

1.1 Purpose

The purpose of the proposed work is to further evaluate the distribution of contaminants remaining within the Upper Till and the Upper Sand and Gravel Unit in the area of MW-27R. Well MW-27R is one of three Pump & Treat compliance monitoring points for Plume 2[1] at Third Site. Pump & Treat shut down is to occur when established criteria are met. In accordance with the Third Site Consent Order entered September 19, 2002, the EPA Enforcement Action Memorandum of May 11, 2001, and the Design Report, the pump and treat (P&T) shut down criteria will be met when either a 90% reduction total VOC is achieved or Ground Water Action Levels set forth in Table 1 are achieved, whichever comes first. For MW 27R, a 90% reduction equals 988.4 ug/L.[2]

Based on the limited progress of P&T at MW-27R, electrical resistive heating (ERH) treatment was conducted in this area (ATT)[3] during the fall and winter of 2018.[2] As described in more detail below, the ERH contractor, MM, reinstalled MW-27R (MW-27R-1) in May 2018 with materials resistant to heating to monitor remedial progress.

---

[1] ENVIRON, March 17, 2004, Design Report for Non-Time Critical Removal Action at Third Site, Revision 2 (the Design Report).

[2] The amendments of the Consent Order and Enforcement Action Memorandum regarding the implementation of ERH did not alter the P&T shut down criteria.

[3] To provide a "cushion" toward assuring shut down compliance, the McMillan-McGee Corp. ("MM"), April 23, 2018, Remedial Design Report, Third Site ERH provided for a slightly more stringent total VOC reduction value which was imposed upon MM through its Contract. That Report did not alter the P&T shutdown criteria set forth above.

ED_012957A_00000701-00003

This well was, however, not completed at a depth similar to the compliance point it replaced and had to be reinstalled in March 2019 following ERH treatment. Both the original MW-27R and the current MW-27R-2 are screened from a depth of approximately 6 feet bgs to slightly more than 11 feet bgs. The well installed by MM in May of 2018 (MW-27R-1) was screened to approximately 8 to 19 feet bgs. There is some uncertainty of the depth of contamination in this area due to conflicting and/or ambiguous field notes taken by MM and United States Army Corps of Engineers (USACOE) representatives who were overseeing the re-installation of that well (MW-27R-2) in March 2019. The data collected through the work proposed herein will aid in determining the depths of impacts in the vicinity of "MW-27R" - that term is used below to refer to the common horizontal location of all three of those wells.

1.2 Objectives

The specific objectives of the proposed work are to develop a current understanding of contaminant distribution within the upper 22 ft bgs in the vicinity of MW-27R following ERH implementation.

1.3 Organization

The remainder of this Work Plan is organized as follows:

1. Section 2 presents a summary of the background information on well MW-27R;
2. Section 3 describes the proposed investigation and sampling;
3. Section 4 presents the project schedule; and
4. Section 5 contains a list of references used in preparation of this work plan.

2. BACKGROUND

Multiple iterations of monitoring well MW-27 have been installed at the site since October 2002. The original MW-27 was installed by Environ in October 2002 and was installed to a total depth of approximately 12 ft bgs and was screened from approximately 7-12 ft bgs. In September 2012 Environ replaced monitoring well MW-27 with the original MW-27R. The 2012 MW-27R was installed to a total depth of approximately11.2 ft bgs with screen set from approximately 6.2-11.2 ft bgs. The historical groundwater data from MW-27 and MW-27R were used to identify the need for remediation in the ATT area. However, MW-27R was constructed with 2-inch dimeter PVC well screen and

ED_012957A_00000701-00004

casing which could have been damaged during ERH operations. To avoid damaging the well casing during ERH operations, MM replaced MW-27R in May 2018 with another MW-27R (referred to as MW-27R-1). MW-27R-1 was installed with heat resistant stainless-steel well casing and screen to a total depth of approximately 20 ft bgs and was screened from approximately 8-19 ft bgs, that was deeper than the original well. Because MW-27R-1 was installed deeper than MW-27 and MW-27R, the data from MW-27R-1 could not effectively be compared to the pre-ERH data from MW-27 or MW-27R. Therefore, in March 2019, MW-27R-1 was replaced with another well (referred to as MW-27R-2). MW-27R-2 was installed and screened to be consistent with MW-27 and the original MW-27R and was installed to a total depth of approximately 11 ft bgs. Copies of the construction records for the three MW-27R monitoring wells are provided in Attachment A for reference.

Prior to 2018, MW-27R (installed by Environ in 2012) was routinely sampled during Pump and Treat progress monitoring events. MW-27R-1 was sampled by Ramboll on September 11, 2018 prior to commencing ERH operations. The September 2018 sampling event was the only time MW-27R-1 was sampled. Although a duplicate sample was also collected. Minimal VOC concentrations were detected in the primary and duplicate samples from MW-27R-1. Groundwater VOC analytical results for MW-27, MW-27R, and MW-27R-1 are provided in Table 1. MW-27R, MW-27R-1 and MW-27R-2 data are all displayed as MW-27R in Table 1 with a foot note describing the dates of installation of each of the wells. The total VOC concentrations detected in groundwater samples collected from the shallower screened MW-27R (2012) were approximately two orders of magnitude higher than the concentrations detected in samples collected from the deeper screened MW-27R-1, screened from 8-19 ft bgs, in September 2018. A comparison of analytical results from MW-27R and MW-27R-1 demonstrates minimal VOC impacts from the deeper screened interval.

To facilitate the installation of MW-27R-2, monitoring well MW-27R-1 was over-drilled and removed. During this drilling event, conflicting and/or ambiguous field notes were recorded by MM and USACOE field representatives that could be considered to indicate possible impacts from the 20 ft depth interval (Attachment B). The MM field notes indicate a PID reading of 23 ppm measured during the re-installation of MW-27R was taken from the driller's gloves. The USACOE field notes agree as to the PID value but contain no indication of where the reading was taken.

ED_012957A_00000701-00005

Additionally, the USACOE field notes indicate that the PID readings peaked at 23 ppm and then state "moved out of breathing zone". MM's field notes do not indicate odors or anyone leaving the area and MM does not recall this occurring (Attachment B).

The EPA sent an email on February 14, 2020 raising concerns that MW-27R-2 may be screened too shallow to monitor the potential groundwater impacts suggested by the PID reading during the removal of MW-27R-1. In a conference call on March 20, 2020, it was agreed that a defined Work Plan would be implemented in light of the discrepancy in the field notes.

3. SCOPE OF WORK

The investigation activities presented in this work plan include first sampling of performance monitoring well MW-27R-2 followed by soil sampling using a direct push technology (DPT) drill rig or mini sonic drill rig to collect soil cores for laboratory analysis of VOCs. The field investigation activities will be performed primarily by Ramboll with support and data interpretation from Geosyntec. Prior to commencing sampling activities, the existing ERH equipment (i.e., extraction lines and cables) will need to be moved to provide sufficient access to the proposed sampling locations so that the scope of work presented herein can be safely completed.

3.1 Groundwater Sampling

Groundwater sampling from MW-27R-2 was most recently conducted on March 12, 2020. Data for this sampling round are included in Table 1 along with historic groundwater data for these wells. The data is preliminary and still undergoing verification, however, there were no VOCs detected in the sample collected from this well in March 2020.

3.2 Discrete Soil Sampling

Continuous soil cores will be collected to a depth of 22 ft bgs using either DPT or sonic drilling technologies from two (2) borings locations (**Figure 1**), each within approximately 2 feet of MW-27R-2. One boring will be located each upgradient and downgradient of MW-27R-2. The exact location of the proposed soil borings presented in this work plan may be adjusted based on access, subsurface or overhead obstructions and restrictions (e.g. above or below ground utilities) encountered in the field.

Continuous core soil samples will be collected from ground surface to a target depth of approximately 22 feet below ground surface (ft bgs). Soil cores will be screened in the field with a photoionization detector (PID). One soil sample will be collected from each 5-ft soil core from the portion of the core with the greatest PID response and retained for laboratory analysis. Soil samples will be collected into laboratory provided clean 8 oz glass jars, sealed, placed in sealed plastic bags, and stored on ice for transport to the analytical laboratory under chain of custody procedures. Soil samples will be submitted for analysis of VOCs by EPA method 8260B.

It is possible that the soils in the vicinity of the investigation may still have elevated temperatures. Therefore, MM will be asked to confirm temperatures in the cell using their existing equipment prior to mobilization of drilling equipment. In the event that elevated temperatures are still present, the temperature of the soil cores will be monitored, and safe handling procedures will be implemented if elevated temperatures are encountered. The following procedures will be followed when handling hot soil cores:

- Drillers to wear heat resistant gloves;
- Outside of drill rods to be scanned using infrared thermometer while pulling them up:
- Any sections with elevated temperatures to be placed in ice bath and allowed to cool prior to opening drill rod and extracting soil core; and,
- Diligent monitoring or air space and cores with PID due to higher potential for volatilization.

Upon reaching the target depth, soil borings will be backfilled with hydrated bentonite or grout to seal the borehole.

4. SCHEDULE

An anticipated schedule to complete the field investigation activities discussed in this work plan is presented below:

Task	Timeframe
Approval to proceed received from the EPA.	Week 0
Field preparation including scheduling, and subcontractor contracting.	4 weeks

ERH equipment removal and replacement	2-4 days* (need to confirm with ERH contractor)
Completion of groundwater sampling and of soil sampling	2 days
Analysis of data and generation of a report by Geosyntec that summarizes the finding of the results.	4 weeks
Total Number of Weeks to Completion Following Approval to Proceed	**9 weeks**

5. REFERENCES

Environ 2013. QAPP Addendum = *Quality Assurance Project Plan Addendum, Third Site, Zionsville, Indiana*. Submitted to: USEPA, Region 5. On behalf of: Third Site Trustees. Prepared by: ENVIRON. Dated February 2013.

ED_012957A_00000701-00008

Geosyntec consultants

FIGURES

ED_012957A_00000701-00009

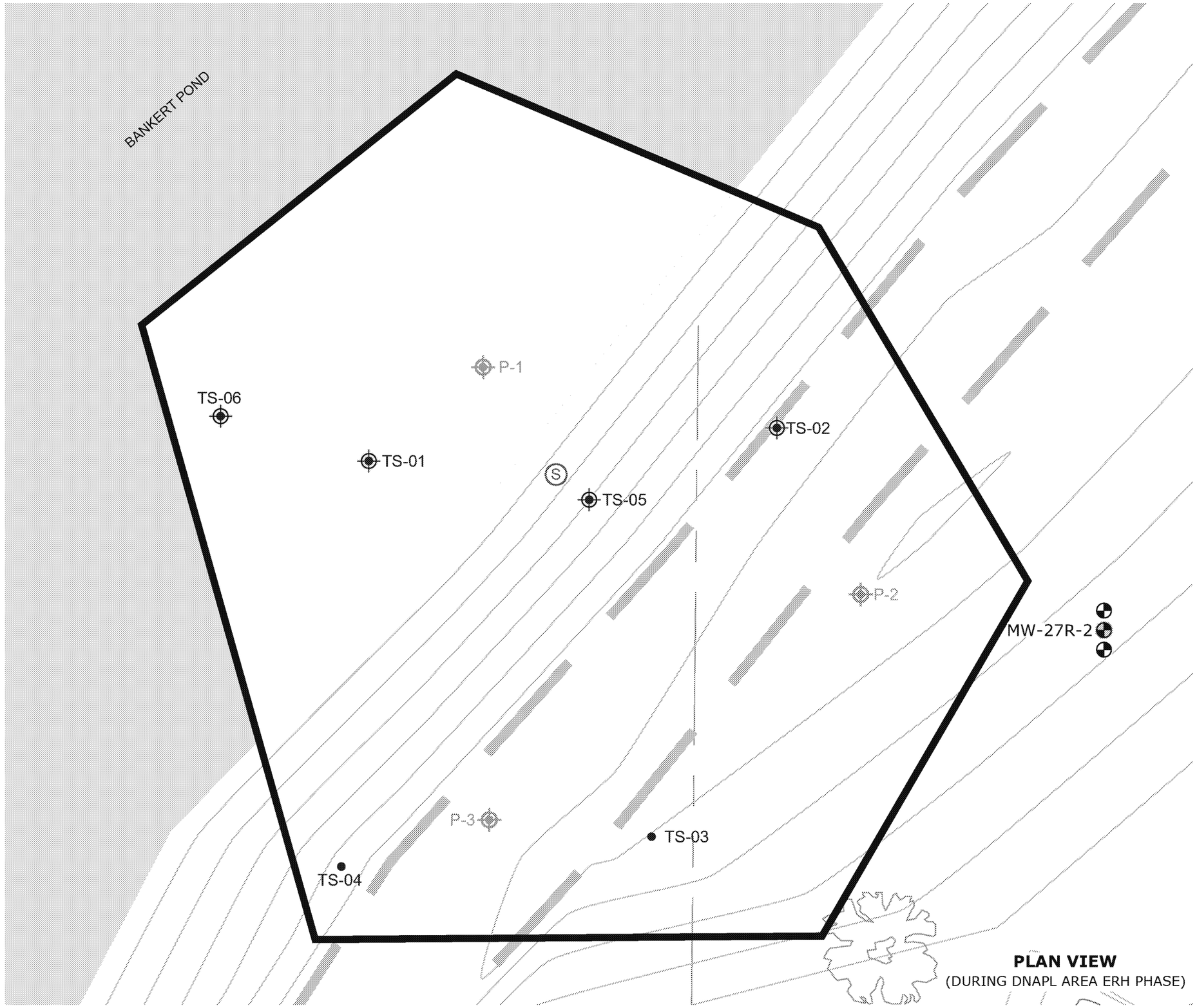

PLAN VIEW
(DURING DNAPL AREA ERH PHASE)

LEGEND
- SHEET PILE WALL
- PIEZOMETER
- EXTRACTION SUMP
- PROPOSED SOIL SAMPLE LOCATION
- 2014 SOIL BORING LOCATION
- MONITORING WELL
- PROPOSED SOIL BORING

0 10
SCALE IN FEET

MW-27R-2 INVESTIGATION BORINGS
THIRD SITE
985 SOUTH U.S. HIGHWAY 421
ZIONSVILLE, INDIANA

RAMBOLL

FIGURE
1

DRAFTED BY: APR/ELS | DATE: 4/2/20 | 1690013634

L:\Loop Project Files_CAD\1690013634_Third Site_WIP\01_MW-27R-2 Investigaton Borings.dwg

Geosyntec consultants

TABLES

ED_012957A_00000701-00011

TABLE 1
MW-27R Groundwater Monitoring Analytical Results Summary (ug/L)
Third Site Superfund Site, Zionsville, Indiana

Groundwater Action Levels (GAL)[2]			1,1-DCA	1,1-DCE	cDCE	tDCE	PCE	1,1,1-TCA	1,1,2-TCA	TCE	VC	Other VOCs	Total VOCs	P&T Shut Down Criteria[6]
			990	7	70	100	5	200	5	5	2	n/a	n/a	n/a
Sample ID		Date												
PLUME 2														
MW-27		10/17/2002	13.0	0.7 J	**120**	5 J	<5.0	1 J	<5.0	1 J	**50.0**	n/a	190.7 [5]	
	Dup	10/17/2002	11.0	0.8 J	**110**	4 J	<5.0	1 J	<5.0	<5.0	**47.0**	n/a	173.8 [5]	
MW-27R		11/15/2012	890	5.9	**5200**	67.0	0.12 J	74 J	0.29 J	**5.5**	**2,000**	1,641	**9,884**	
		5/21/2014	586	<25	**4,520 J**	**170**	<25	**244**	<25	<25	**1,060**	1,211	**7,791**	
	Dup	5/21/2014	603 J	**11.3**	**4,730 J**	**186**	<5.0	**250**	<5.0	<5.0	**1,050 J**	1,823	**8,653**	
		8/27/2014	135	<5.0	**586**	7.1	<5.0	32.0	<5.0	<5.0	**454**	456	**1,670**	
	Dup	8/27/2014	140	<5.0	**556**	7.6	<5.0	32.4	<5.0	<5.0	**447**	463	**1,646**	
		12/17/2014	407	6.7	**2,460**	**106**	<5.0	192	<5.0	<5.0	**642**	1,155	**4,969**	
	Dup	12/17/2014	447	6.5	**2,700**	**105**	<5.0	193	<5.0	<5.0	**702**	1,292	**5,445**	
		3/5/2015	401	**20.6**	**3,150**	**160**	<5.0	190	<5.0	<5.0	**544**	926	**5,392**	
	Dup	3/5/2015	417	**26.7**	**2,880**	**169**	<5.0	196	<5.0	<5.0	**594**	970	**5,253**	
		6/10/2015	357	**9.1**	**2,590**	**151**	<1.0	**202 J**	<1.0	2.3	**585**	850	**4,745**	**988.4**
	Dup	6/10/2015	343	**8.6**	**2,600**	**143**	<1.0	**274 J**	<1.0	2.1	**557**	856	**4,784**	
		9/22/2015	340	<5.0	**1,380**	67.6	<5.0	158	<5.0	<5.0	**796**	933	**3,674**	
		12/10/2015	509	<25	**2,680**	**132**	<25	**238**	<25	<25	**812**	1,138	**5,509**	
		3/16/2016	414	**14.8**	**3,440**	**188**	<5.0	**243**	<5.0	<5.0	**407**	816	**5,523**	
		6/9/2016	480	**9.5**	**4,380**	**226**	<5.0	**424**	<5.0	<5.0	**548**	990	**7,057**	
	Dup	6/9/2016	460	<5.0	**4,300**	**211**	<5.0	**397**	<5.0	<5.0	**517**	963	**6,848**	
		9/14/2016	480	**37.0**	**3,630**	**209**	<5.0	**438**	<5.0	<5.0	**538**	1,048	**6,380**	
	Dup	9/14/2016	477	**37.1**	**4,350**	**195**	<10	**441**	<10	<10	**609**	1,022	**7,131**	
		12/7/2016	399	**20.9**	**3,170**	**220**	<1.0	**363**	<1.0	1.6	**547**	1,046	**5,767**	
	Dup	12/7/2016	381	**20.8**	**3,080**	**213**	<1.0	**335**	<1.0	1.5	**511**	1,012	**5,554**	
		3/22/2017	505	<5.0	**3,960**	**241**	<5.0	**516**	<5.0	<5.0	**688**	944	**6,854**	
	Dup	3/22/2017	501	<5.0	**4,500**	**245**	<5.0	**521**	<5.0	<5.0	**694**	959	**7,420**	
		6/14/2017	388	**36.9**	**3,080**	**198**	<10	**440**	<10	<10	**581**	804	**5,527**	
	Dup	6/14/2017	361	**31.7**	**3,220**	**163**	<10	**420**	<10	<10	**499**	725	**5,419**	
		10/11/2017	416	**19.8**	**3,540**	**235**	<1.0	**434**	<1.0	1.3	**840**	891	**6,377**	**742[7]**
	Dup	10/11/2017	430	**15.5**	**3,620**	**239**	<1.0	**444**	<1.0	1.4	**854**	936	**6,540**	
		12/14/2017	303	<5.0	**2,780**	**164**	<5.0	**270**	<5.0	<5.0	**514**	738	**4,769**	
	Dup	12/14/2017	292	<5.0	**2,640**	**154**	<5.0	**252**	<5.0	<5.0	**491**	721	**4,550**	
MW-27R[8]		3/20/2018	310	**7.2**	**2,630**	**146**	<5.0	**293**	<5.0	<5.0	**569**	624	**4,579**	
	Dup	3/20/2018	326	<10	**2,760**	**145**	<10	**297**	<10	<10	**589**	633	**4,750**	
MW-27R-1[9]		9/11/2018	10.0	<1.0	12.5	<1.0	<5.0	<1.0	<5.0	<5.0	**11.6**	5.4	39.5	
	Dup	9/11/2018	10.2	<1.0	11.5	<1.0	<1.0	<1.0	<1.0	<1.0	**11.1**	0.0	32.8	
MW-27R-2[10]		3/29/2019	<10	<10	**153**	<10	<10	<10	<10	**41.1 J**	<10	1,092	**1,286**	**742[7]**
	Dup	3/29/2019	<10	<10	**173**	<10	23.2	<10	<10	**127 J**	<10	1,292	**1,615**	
		9/5/2019	<5.0	<5.0	<5.0	<5.0	<5.0	<5.0	<5.0	**5.7**	**7.4**	19.1	32.2	
	Dup	9/5/2019	<5.0	<5.0	<5.0	<5.0	<5.0	<5.0	<5.0	<5.0	**8.4**	13.4	21.8	
		3/12/2020	<10	<10	<10	<10	<10	<10	<10	<10	<10	0.0	0.0	

Notes:

1,1-DCA = 1,1-Dichloroethane 1,1-DCE = 1,1-Dichloroethene cDCE = cis-1,2-Dichloroethene tDCE = trans-1,2-Dichloroethene

PCE = Tetrachloroethene 1,1,1-TCA = 1,1,1-Trichlorethane 1,1,2-TCA = 1,1,2-Trichlorethane TCE = Trichloroethene VC = Vinyl Chloride

1. Bolded values in table are above respective Groundwater Action Levels or P&T shut down criteria.

2. Groundwater Action Levels (GAL) to be achieved after completion of monitored natural attenuation from Enforcement Action Memorandum dated May 11, 2001; Equivalent to MCL/IDEM Tier I Default Criteria of Table 2-7-C of the October 2000 EE/CA and Table 4 of the Design Report.

3. J = Estimated concentration. 4. n/a = Not applicable

5. Samples collected in October 2002 were analyzed for the nine target COC only and not the full 8260 VOC list.

6. P&T Shut Down Criteria from Table 4 of the March 2004 Design Report. Values represent 10% of total VOC concentrations presented in Table 2-5 of the October 2000 EE/CA. For MW-27, MW-28, and MW-29, values provided represent 10% of total VOC concentrations from the 2012 sampling event (the most recent pre-pumping event). Please note that the GALs are the ultimate cleanup criteria after 10 years monitored natural attenuation as indicated in Note 2. As such, per Table 4 of the Design Report, P&T shutdown criteria are met when the wells in the plume either meet the GAL or show a 90% reduction in total VOC.

7. To provide a "cushion" toward assuring shut down compliance, McMillan-McGee Corp. ("MM"), April 23, 2018, Remedial Design Report, Third Site ERH provided for a slightly more stringent total VOC reduction value which was imposed upon MM through its Contract. That Report did not alter the original P&T shutdown criteria discussed in Note 6. Per the McMillan-McGee April 2018 ERH remedial design report, the revised P&T Shut Down Criteria for MW-27R is 742 ug/L.

8. MW-27R abandonded after the March 2018 sampling event due to ERH remedial activities in the DNAPL area.

9. MW-27R reinstalled by MM in May 2018 and designated as MW-27R-1. The new MW-27R-1 well screen interval is approx. 8-19 ft bgs; the screen interval for the well it replaced (MW-27R) was approx. 6-11 ft bgs.

10. MW-27R-1 abandoned due to incorrect screen interval. MM re-installed as MW-27R-2 in March 2019 as a stainless steel 2" well. 5-foot screen set from approximately 6-11'. March 2019 is first sampling event for this well.

11. The March 2020 data are preliminary and suject to validation.

Geosyntec consultants

ATTACHMENT A:

ED_012957A_00000701-00013

SHALLOW GROUNDWATER MONITORING WELL MW-27R -2

Date	Signature	Rig ID
3-22-2019	Jerry Bignall	7822
Monitoring Well	Monitoring Well Type	
MW-27R	SHALLOW GROUNDWATER	
Start Time	Completion Time	
1440	1847	

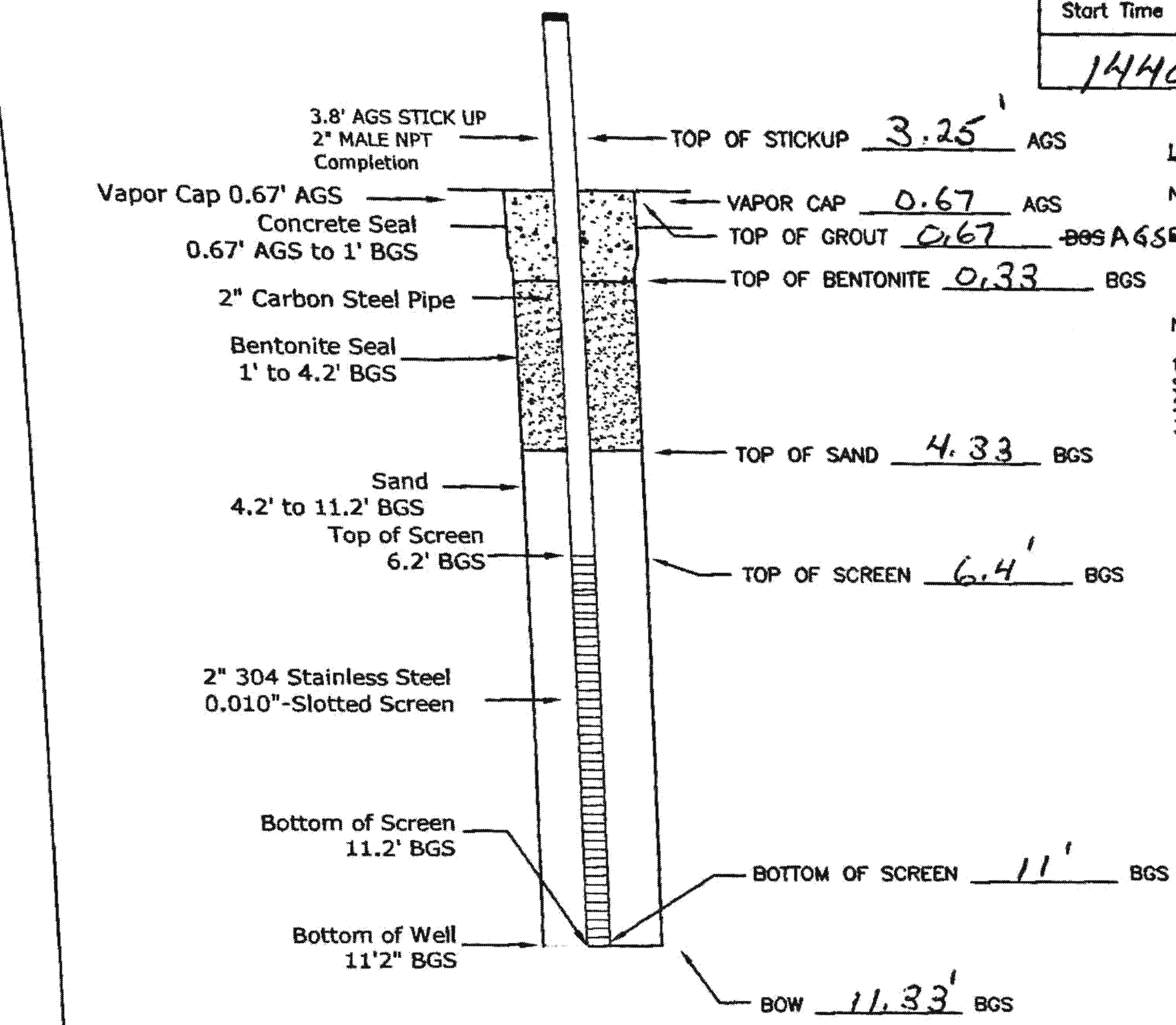

LOCATION INSTALLED:

NORTHING: N 40°01'35.9"

~~EASTING:~~ W 086° 16' 37.6"

NOTES:

1. 10-SLOT STAINLESS STEEL WELL SCREEN, MALE AND FEMALE THREADED ENDS
2. RISER PIPE IS CARBON STEEL
3. MINIMUM BORING DIAMETER IS 4"

ABBREVIATIONS

1. BOW – BOTTOM OF WELL

PID READINGS:

PEAK (ppm): 2.8
0–3' (ppm): 1.2
3–6' (ppm): 1.2
6–9' (ppm): 1.7
9–12' (ppm): 2.8

SITE MATERIAL TYPES:

1. GROUT: Fast Setting
   CEMENT TYPE USED: Premix
   QUANTITY: 1 bag
2. SAND:
   TYPE: #5
   QUANTITY: 2 bags
3. BENTONITE:
   CHIP SIZE USED: 3/8"
   QUANTITY: 2 bags

	Company	Name	Signature
EEI/	Mc2USA	Jerry Bignall	Jerry Bignall
	Terracon	Tyrone Blackstock	
	USACE	Mark Nichter	

McMILLAN-McGEE CORP.	Designed by MCMILLAN-MCGEE	Checked by EJR	Approved by DAR	File name THIRD-SITE-ERH	Date MAR/21/2019	Scale Not to Scale
	MONITORING_WELL			DRILLING:QA/QC		
				PROPRIETARY AND TRADE SECRET INFORMATION ANY USE OR REPRODUCTION OF THIS DOCUMENT, IN PART OR WHOLE, WITHOUT PRIOR EXPRESS WRITTEN PERMISSION IS STRICTLY PROHIBITED.	Edition 1	Sheet 1

Date	Signature	Rig ID
May 12/18	[signature]	T-05
Monitoring Well	Monitoring Well Type	
MW-27R-1	SHALLOW GROUNDWATER	
Start Time	Completion Time	
0850	0940	

SHALLOW GROUNDWATER MONITORING WELL

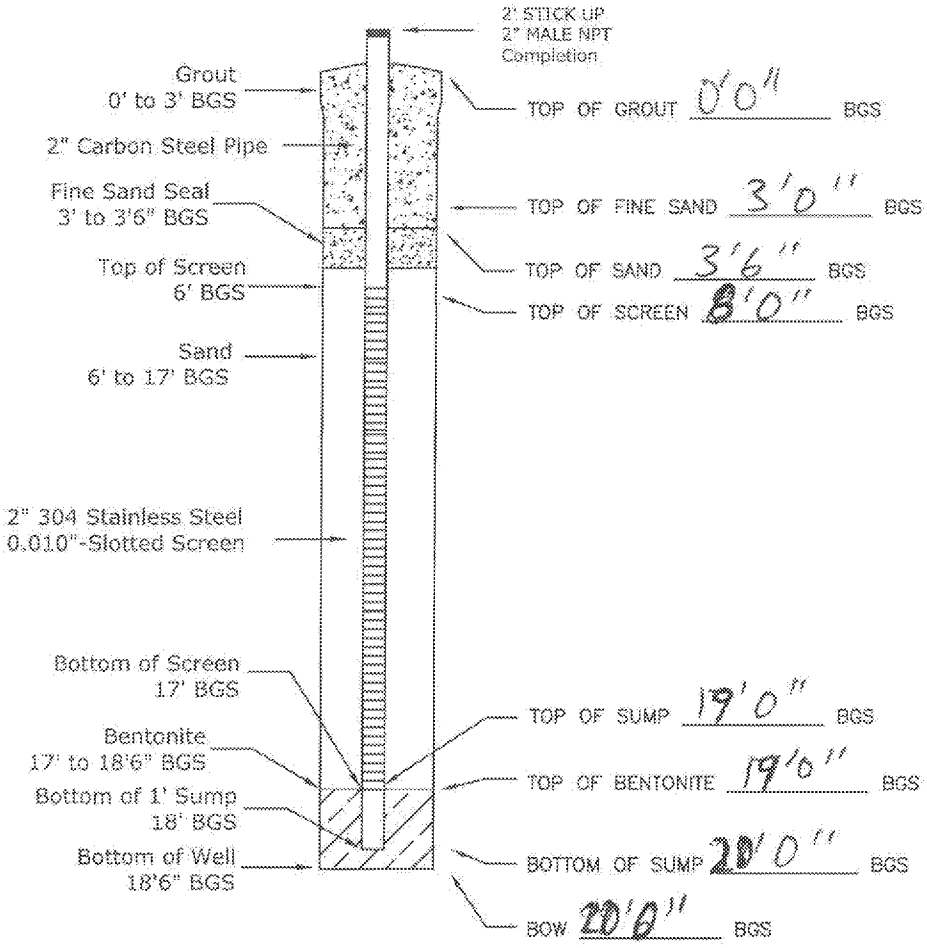

LOCATION INSTALLED:

NORTHING: _____

EASTING: _____

NOTES:

1. 10-SLOT STAINLESS STEEL WELL SCREEN, MALE AND FEMALE THREADED ENDS
2. RISER PIPE IS CARBON STEEL
3. MINIMUM BORING DIAMETER IS 4"

ABBREVIATIONS

1. BOW – BOTTOM OF WELL

PID READING:

PEAK (ppm): 1.2

SITE MATERIAL TYPES:

1. GROUT:
   CEMENT TYPE USED: Portland
   QUANTITY: TO SURFACE
2. SAND:
   TYPE: #7
   QUANTITY: 6 bags
3. FINE SAND:
   TYPE: #8
   QUANTITY: 1 bag
4. BENTONITE:
   CHIP SIZE USED: Medium
   QUANTITY: 1/16 bag

Company	Name	Signature
HRD Sonic	Trevor Rose	[signature]

Designed by	Checked by	Approved by	File name	Date	Scale
MCMILLAN-MCGEE	EJR	DAR	THIRD-SITE-ERH	MAR/7/2018	Not to Scale

MCMILLAN-MCGEE CORP.

MONITORING_WELL

DRILLING:QA/QC

PROPRIETARY AND TRADE SECRET INFORMATION
ANY USE OR REPRODUCTION OF THIS DOCUMENT, IN PART OR WHOLE, WITHOUT PRIOR EXPRESS WRITTEN PERMISSION IS STRICTLY PROHIBITED

Edition	Sheet
1	1

ENVIRON

ENVIRON
One Indiana Square
Suite 2335
Indianapolis, IN 46204

BORING NUMBER MW-27R

CLIENT Third Site Trustees
PROJECT NAME 3rd Site
PROJECT NUMBER 2167990
PROJECT LOCATION Zionsville, IN
DATE STARTED 9/27/12 **COMPLETED** 9/27/12
GROUND ELEVATION 882.15 ft **HOLE SIZE** 8 inches
DRILLING CONTRACTOR Earth Exploration
GROUND WATER LEVELS:
DRILLING METHOD Hollow Stem Auger
AT TIME OF DRILLING ---
LOGGED BY Matt Hennessy **CHECKED BY** Majory McCartney
AT END OF DRILLING ---
NOTES
AFTER DRILLING ---

DEPTH (ft)	SAMPLE TYPE NUMBER	BLOW COUNTS (N VALUE)	ENVIRONMENTAL DATA	GRAPHIC LOG	MATERIAL DESCRIPTION	
0	SS 50%		PID = 0.1		LEAN CLAY, (CL) 5 % sand, 95 % fines, dark brown, dry, medium stiff, low plasticity	
	SS 50%		PID = 0			
3.5					LEAN CLAY, (CL) 15 % sand, 85 % fines, dry, medium stiff, low plasticity	878.7
5	SS 50%		PID = 0			
	SS 50%		PID = 0.4			
7.0					LEAN CLAY, (CL) dark grayish green, moist, medium stiff, low plasticity	875.2
10	SS 100%		PID = 0.4			
11.0						871.2
	SS 100%		PID = 3.5		LEAN CLAY WITH SAND, (CL) 5 % sand, 95 % fines, moist, low plasticity	870.6
11.6						870.2
12.0					WELL GRADED SAND, (SW) 15 % gravel, 80 % sand, 5 % fines, light brown, well graded, coarse grained, saturated, loose	

Bottom of borehole at 12.0 feet.

WELL DIAGRAM

Casing Top Elev: 882.15 (ft)
Casing Type: 2" PVC Sch. 40

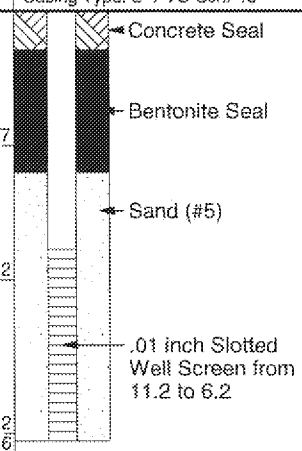

ENVIRONMENTAL BH - GINT STD US LAB.GDT - 12/6/12 16:41 - Z:\ACTIVE PROJECTS\TT\THIRD SITE\BORING AND WELL LOGS\MW-27R INSTALL.GPJ

ENVIRON
740 Waukegan Road, Suite 401
Deerfield, Illinois 60015

WELL CONSTRUCTION LOG

MONITORING WELL NO. MW27

TOTAL DEPTH: 12ft.

PROJECT INFORMATION

PROJECT:	Third Site
SITE LOCATION:	Zionsville, Indiana
JOB NO.:	216799H
LOGGED BY:	Doug Burge
DATE(S) DRILLED:	10/9/02

DRILLING INFORMATION

DRILLING CO.:	Earth Exploration
DRILLER:	Jay Jacobs
RIG TYPE:	
METHOD OF DRILLING:	Hollow Stem Auger
BORE HOLE DIAMETER:	Split Spoon

T.O.C. ELEVATION: 880.92

SURVEY COORDINATES:

USCS	GRAPHIC LOG	DEPTH (ft)	WELL CONSTRUCTION

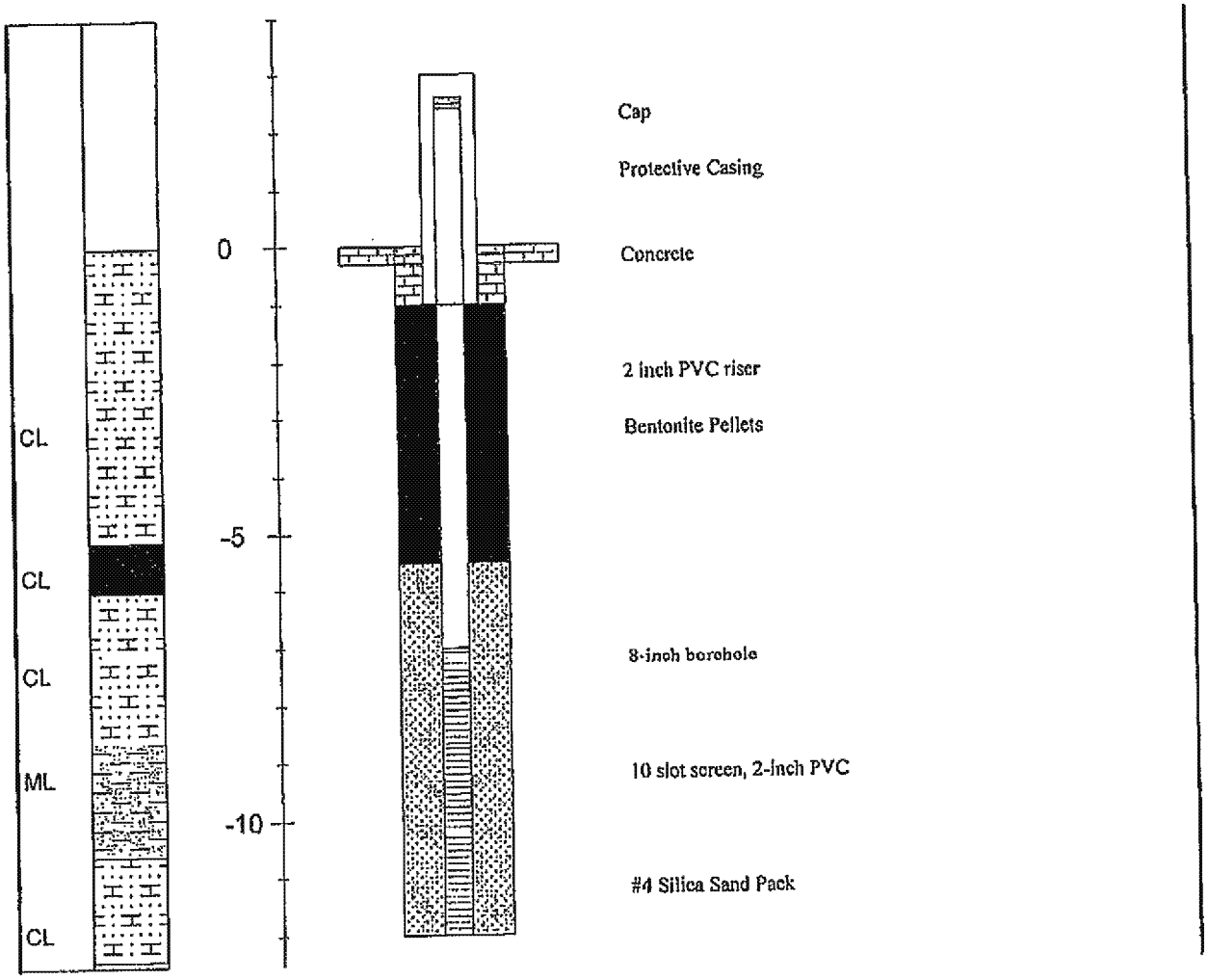

Geosyntec consultants

ATTACHMENT B:

ED_012957A_00000701-00018

Friday 3-22-19 37°-46° Partly Sunny

0730 Jerry On Site, Unlock office, Filled out daily H_2S report. Then start taking Perimeter fencing down, for rig access.

0808 Mark Nichter with USACE (Army Corps of Engineers) on site for oversight of well installation MW-27R. Mark gave me a hand in taking the fence apart. EEI-Terracon called they are waiting for the S.S. well screen to show up.

0835 EEI/Terracon are on their way, to the site After taking fence down, I have to disconnect the 4" lateral piping due to it is directly over the well MW-27R.

1020 Drill crew is on site. They unload their equipment.

1045 Had daily H_2S meeting.

1100 I moved the 4" lateral piping for rig access.,

1130 Moved 6'x10' 1" thick steel plate into position., Then disconnected the PDS's & the PDP.

1140 Moving Geoprobe (7822) into position.

1155 Began overdrilling MW-27R, Soil cuttings PID reading 1.0 PPM while in the breathing zone it is only 0.1 PPM

1230 Augers are down to 5' BGS & removed auger. Prepping to pull existing well.

1255 Removed old well from ground. PID got reading of 23 PPM from gloves of driller who was just ~~handeling~~ handling the well screen that had been down to 20'10".

~~1305~~ Moved old well material out of the area, PID readings in rig work area. 0.0 - 0.1 PPM.

3-22-19 Continued

1305 Placed Global Quartz Sand #4 in borehole so auger would set on it @ 4', Then they drilled down to 11.5' @ 13:25. I had looked at the coarse Sand #4 and had called Eric. He told me that #5 Sand was called for on the well specs. I informed the driller they NEED #5 Sand.

1340 Broke for Lunch while waiting for #5 Sand to be picked up then brought to the site.

1440 Back from Lunch, Drillers have already placed well in borehole, the riser was sticking up very high. I asked the driller how deep he was, 11.5' I informed him we need to be 12' from Top of Thermal cap. ~~we~~ We pulled the well out & tried drilling deeper. They only had 12' of augers and couldn't get past 11.5'

1525 Drillers went to get more augers. I measured the well material it is 15' 3/4" to Top of casing. The PID reading at the borehole is 0.4 ppm.

1630 Drillers back on site, pulling augers, replaced Knock out plug, then went back in the hole, and drilled to 12.5'

1700 Preparing to install the well, start installing. Sand packed to 4.33', placed bentonite chip seal 4.33 - 0.33'

1758 Well installed, cleaning up area, moved rig off location. Still need to mix & place concrete from 1'-0'. I went and turned PDP & PDS back on, reset breakers. Eric called and we have trouble with one Cat 5e cable, I worked on it for a while. Then told Eric

3-22-19 Cont.

I need to get the fence put back up.

1847 Well Complete, drill crew leaving site.

1855 Mark helped me get the steel plate back out.

Then we put the fencing back together

1945 Fencing together again. Mark & Jerry OFF Site.

3-22-19

Jerry Bigsell

Norman Bernstein <nwbernstein@nwbllc.co

ACE Field Notes: Third Site MW-27R

essage

Fri, Feb 21, 2020 at 9:36

, **Matthew** <ohl.matthew@epa.gov>
Andrew A Gremos <agremos@ramboll.com>, Norm Bernstein <nwbernstein@nwbllc.com>
"David A. Rountree" <drountree@mcmillan-mcgee.com>, "pracher@psrb.com" <pracher@psrb.com>, Eric Ringdahl <eringdahl@mcmillan-mcgee.com>, Brent Winder <bwinder@mcmillan-mcgee.com>, "Krueger, Thomas" <krueger.thomas@epa.gov>, Douglas Petroff <DPetroff@idem.in.gov
k Nichter <Mark.W.Nichter@usace.army.mil>

ood morning:

lere are the field notes from Mark Nichter of USACE.

hank you,

Matt

Matthew J. Ohl
Remedial Project Manager
United States Environmental Protection Agency
77 West Jackson Boulevard, SR-6J
Chicago, IL 60604-3590

Phone: 312.886.4442
Fax: 312.692.2447
E-mail: ohl.matthew@epa.gov

3/22/2019 – FIELD OVERSIGHT OF WELL INSTALLATION MW-27R AT THIRD SITE

0808 – ARRIVED ON SITE. MET WITH JERRY BANAZL (314-960-7272) OF MM2. JERRY ON SITE, WORKING TO DE-CONSTRUCT ERH SYSTEM & CLEAR PATH TO WELL MW-27R. NOTHING CHANGED ON SITE SINCE MY LAST SITE VISIT (LAST WEEK). DRILLING FIRM REPORTEDLY WAITING ON WELL SUPPLIES BEFORE THEY MOBILIZE TO SITE.

NOTE: MW-27R IS A PLUME #2 MONITORING WELL.
EXCEEDANCES: 1,1-DCE, CIS-1,2-DCE, TRANS-1,2-DCE, VC,
[illegible]

BLACKSTONE

- TERRACON
  - PLAN IS TO REMOVE EXISTING WELL, AND OVERDRILL W/ 4 1/4" AUGERS
  - WILL SET NEW WELL AT 12' BGS. (ORIGINAL AT 20' 10".)

10:45 AM. — SAFETY MEETING W/ JERRY & DRILLERS.

11:00 — JERRY WORKING TO REMOVE ADDITIONAL PIPING IN AREA OF MW-27R. [CALLED MATT DIAL, AND INFORMED HIM OF PLAN TO INSTALL SHALLOWER NEW WELL.]

11:40 — MOVING SEDPROBE INTO POSITION.

1155 — BEGAN OVERDRILLING MW-27R., ENCOUNTERED TOP WATER TABLE AT 9 FT. BGS., PID READING AT BOREHOLE 1 PPM.. ODOR PRESENT.; PID READING 0.1 PPM. IN BREATHING ZONE.

1230 — AUGERED DOWN 5' BGS, AND REMOVED AUGER. PREPARING TO REMOVE OLD WELL.

1255 — REMOVED OLD WELL FROM BOREHOLE. PID READING PEGGED AT 22 PPM. MOVED OUT OF BREATHING ZONE. PID CALIBRATED TO ISOBUTYL I.D.

1305 — PLACED GLOBAL QUARTZ SAND #4 (SIZE 8/17) IN BOREHOLE.

[PID METER IS MINIRAE 3000]. JERRY INFORMED DRILLERS THEY NEED TO USE #5 SIZE SAND PACK.

13:25 — RESUMED AUGERING BOREHOLE, TO ≈ 11.5'

13:48 — BROKE FOR LUNCH.

14:40 — RETURNED TO SITE, ATTEMPTED TO SET WELL, REDRILLING BOREHOLE.

[15' 3 1/4" MEASUREMENT ON RISER PIPE & SCREEN]

1525 — DRILLERS WENT FOR ADDITIONAL EQUIPMENT. PID READING AT BOREHOLE 0.4 PPM.

1630 – DRILLERS BACK ONSITE, PULLING AUGERS, RE-SET PLUG, AND ASSEMBLED BACK IN HOLE.

1700 – PREPARING TO INSTALL WELL.

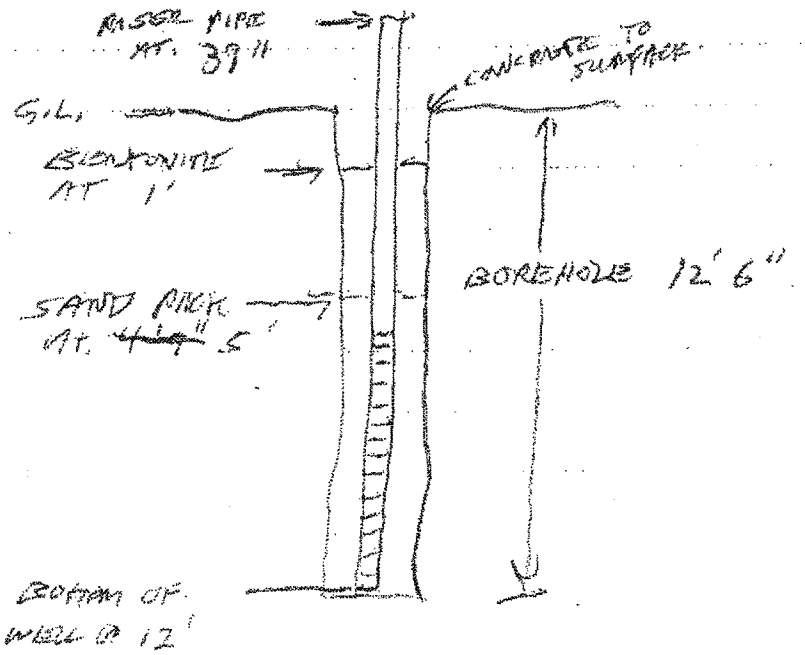

[NOTE: PRE-INSTALLATION MEASUREMENT ON RISER PIPE & SCREEN ASSEMBLY AT 15' 3".]

1758 – WELL INSTALLED W/ SAND PACK & BENTONITE. PREPARING TO GROUT WELL HEAD COMPLETION. (CONCRETE TO SURFACE).

1847 – WELL COMPLETE. DRILLERS LEAVING SITE.

1945 – LEFT SITE.

2300 – ARRIVED BACK AT OFFICE. DROPPED GSA VEHICLE OFF.

Ina W. Mullen

rom: Andrew A Gremos <agremos@ramboll.com>
ent: Friday, February 14, 2020 3:17 PM
o: David A. Rountree <drountree@mcmillan-mcgee.com>
c: 'Norm Bernstein' <nwbernstein@nwblic.com>; pracher@psrb.com; Eric Ringdahl <eringdahl@mcmillan-mcgee.com>; Ohl, Matthew <ohl.matthew@epa.gov>; Brent Winder <bwinder@mcmillan-mcgee.com>
ubject: RE: Third Site MW-27R

hanks David.

---

rom: David A. Rountree <drountree@mcmillan-mcgee.com>
ent: Friday, February 14, 2020 4:00 PM
o: Andrew A Gremos <agremos@ramboll.com>
c: 'Norm Bernstein' <nwbernstein@nwblic.com>; pracher@psrb.com; Eric Ringdahl <eringdahl@mcmillan-mcgee.com>; ohl.matthew <ohl.matthew@epa.gov>; Brent Winder <bwinder@mcmillan-mcgee.com>
ubject: Re: Third Site MW-27R

ndy, Norm,

he advisement of high PID readings doesn't accord with our records. Mark Nichter of the USACE was on site during the well installation; perhaps he has some notes regarding this.

Vell log and field notes attached.

avid A. Rountree

cMillan-McGee Corp

irect: +1 (403) 569-5116

obile: +1 (403) 921-0848

ax: +1 (403) 272-7201

895 35B Street Southeast

algary, Alberta T2B 3M9

anada

The best way out is always through." - Robert Frost

his email and attachments may contain confidential information intended solely for the addressee(s) as indicated above. If you are not the intended recipient of this document, please notify sender immediately and destroy all copies.

isclosure, reproduction, distribution or any other use is prohibited and unlawful. Thank you.

lease consider the environment before printing this email.

n 2020-02-14 1:32 p.m., Andrew A Gremos wrote:

David,

USEPA has raised questions regarding the MW-27R replacement well installed by M&M on or about March 22, 2019. We have looked through our files and can't find an installation/construction record for that monitoring well. Please provide us with a copy of that record. Also, we have been advised by USEPA of high PID readings and a need for evacuation during that monitoring well installation. Please provide us with a copy of field notes or other documentation collected during monitoring well installation.