DEPARTMENT OF THE NAVY
BASE REALIGNMENT AND CLOSURE
PROGRAM MANAGEMENT OFFICE WEST
1455 FRAZEE RD, SUITE 900
SAN DIEGO, CA 92108-4310

Ser BPMOW.cny0127
MAR 16 2012

Mr. Craig Cooper
U.S. Environmental Protection Agency, Region IX
75 Hawthorne Street
San Francisco, CA 94105-3901

Mr. Ryan Miya
Department of Toxic Substance Control
700 Heinz Avenue, Bldg. F, Suite 200
Berkeley, CA 94710

Mr. Larry Morgan
California Department of Public Health
1616 Capitol Avenue, MS 7402
P.O. Box 997377
Sacramento, CA 95899-7377

Dear Regulatory Team Members:

Please find enclosed the Final Radiological Removal Action Completion Report (RACR), Parcel UC-3, Hunters Point Naval Shipyard, San Francisco, California. Response to Comments (RTCs) from the draft version of this report is included as Appendix N. Technical review of the enclosed report has been completed by the Navy's Radiological Affairs Support Office.

As a point of clarification, the Navy anticipates Parcel UC-3 to be the future name of the utility corridor encompassing Crisp Road and the rail line that extends off the base, which is currently part of Parcel E. Parcel UC-3 will be separated from Parcel E after the Proposed Plan. For the purpose of this radiological RACR, the parcel name "UC-3" will be used to describe this portion of Parcel E. Please see Figure 1-2 of the RACR for location of Parcel UC-3.

The Navy requests a letter of concurrence on the enclosed RTCs and the Final Radiological RACR for Parcel UC-3 **no later than Monday, April 16, 2012**. If you have questions regarding the enclosed report, please contact Mr. Chris Yantos at (619) 532-0912, or Mr. Keith Forman at (619) 532-0913.

Sincerely,

KEITH FORMAN
BRAC Environmental Coordinator
By direction of the Director

Ser BPMOW.cny0127
MAR 1 6 2012

Enclosures: 1. Final Radiological Removal Action Completion Report, Parcel UC-3, Hunters Point Naval Shipyard, San Francisco, California.

Copy to:

Diane Silva (2 Hard Copies, 1 unbound, CD)
NAVFAC Southwest (Code EV33)
Naval Base San Diego
2965 Mole Rd., Bldg. 3519
San Diego, CA 92136

Laurie Lowman (Hard Copy and CD)
Building 1971
NWS P.O. Drawer 260
Yorktown, VA. 23691-0260

Amy Brownell (CD Only)
SF Department of Public Health
1390 Market St., Suite 210
San Francisco, Ca 94102

Elaine Warren (CD only)
Office of the City Attorney
City Hall, Room 234
1 Dr. Carlton B. Goodlett Place
San Francisco, CA 94102-4682

Leslie Lundgren (Hard Copy and CD)
150 Spear Street, Suite 750
San Francisco, CA 94105

Dorinda Shipman (Hard Copy and CD)
Treadwell and Rollo
555 Montgomery St., Suite 1300
San Francisco, CA 94111

Stephen Proud (CD Only)
Lennar/BVHP
1 California St., Suite 2700
San Francisco, CA 94111

Stan DeSouza (CD Only)
1680 Mission St., First Floor
San Francisco, CA 94103-2414

Karla Brasaemle (Hard Copy and CD)
90 New Montgomery St., Suite 710
San Francisco, CA 94105

Martha Walters (CD Only)
Representative for ArcEcology
1331 Evans Avenue
San Francisco, CA 94124

Michael Sharpless (CD Only)
Paul Hastings, et al.
55 2nd Street, 24th Floor
San Francisco, CA 94104-2635

Tamara Davidson (CD Only)
SF Health Department
101 Grove Street, Rm 217
San Francisco, CA 94102

Janice Torbet (Hard Copy and CD)
100 Larkin Street
Gov. Information Ctr., 5th Floor
San Francisco, CA 94102

Linda Malvino (Hard Copy and CD)
Mactec Engineering and Consulting, Inc.
1465 North McDowell Blvd, Suite 200
Petaluma, CA 94954

Randy Brandt (CD Only)
1111 Broadway, 6th Floor
Oakland, CA 94607

ED_006787_00017608-00002

Base Realignment and Closure
Program Management Office West
1455 Frazee Road, Suite 900
San Diego, California 92108-4310

CONTRACT NO. N62473-08-D-8823
CTO NO. 0003

FINAL

RADIOLOGICAL
REMOVAL ACTION COMPLETION REPORT

March 16, 2012

DCN: EMAC-8823-0003-0106

PARCEL UC3
HUNTERS POINT NAVAL SHIPYARD
SAN FRANCISCO, CALIFORNIA

Base Realignment and Closure
Program Management Office West
1455 Frazee Road, Suite 900
San Diego, California 92108-4310

CONTRACT NO. N62473-08-D-8823
CTO NO. 0003

FINAL
RADIOLOGICAL
REMOVAL ACTION COMPLETION REPORT
March 16, 2012

PARCEL UC3
HUNTERS POINT NAVAL SHIPYARD
SAN FRANCISCO, CALIFORNIA

DCN: EMAC-8823-0003-0106

TETRA TECH EC, INC.
1230 Columbia Street, Suite 750
San Diego, California 92101-8536

Bill Dougherty
TtEC Project Manager

3/16/12
Date

Erik Abkemeier, CHP, PE, CSP, CHMM
TtEC Radiation Safety Officer

3/16/12
Date

EXECUTIVE SUMMARY

The U.S. Department of the Navy (DON) directed the preparation of this Radiological Removal Action Completion Report (RACR) for the Parcel Utility Corridor 3 (UC3) storm drain and sanitary sewer radiologic time-critical removal action (TCRA) at Hunters Point Naval Shipyard (HPNS) located in San Francisco, California. The purpose of this Radiological RACR is to describe and summarize the results of the radiological work performed on Parcel UC3 to protect the public health and welfare, and the environment from actual or potential releases of radiologic contaminants and document the results of the implemented TCRA. Except in relation to reuse as potential backfill material or waste characterization for disposal of excavated soil derived from removal of the Parcel UC3 storm drain and sanitary sewer systems, this Radiological RACR does not address chemical contamination and does not include or affect any other designated HPNS parcels.

The defined Crisp Road (Work Area 16) property at HPNS to be designated as Parcel UC3 has not yet been established by the DON as a separate land parcel. Once the Proposed Plan is approved, the results of the implemented TCRA activities documented in this Radiological RACR will support preparation of the Parcel UC3 Record of Decision (ROD). For presentation in this Radiological RACR, the Crisp Road property designated as Parcel UC3 was further divided into Work Area 16 West, Work Area 16 Central, and Work Area 16 East. No buildings or former building sites were associated with Parcel UC3.

Parcel UC3 is located in the northwest portion of HPNS and forms the main traffic thoroughfare for tenant access and DON operations along with Robinson Street and Fisher and Spear Avenues. For presentation in this Radiological RACR, the radiological removal action activities performed follow the "Historical Radiological Assessment, Volume II" (HRA) prepared by the Naval Sea Systems Command in 2004 (NAVSEA 2004) and do not impact other portions of Parcel UC3 property that extend west of the Crisp Road, Griffith Street, and Palou Avenue intersection. This Radiological RACR is limited to the approximately 45,407 square meters (m^2) of Parcel UC3 that extends the length of Crisp Road at HPNS. Beginning at the intersection of Crisp Road, I Street, and Spear and 6th Avenues, the radiologically impacted storm drain and sanitary sewer systems removal action activities continued along Crisp Road toward the west and terminated near the HPNS west gate at the intersection of Crisp Road, Griffith Street, and Palou Avenue. No further radiologically impacted HPNS storm drain or sanitary sewer systems extend beyond this intersection.

Parcel UC3 is bounded on the north by the San Francisco Redevelopment Agency (SFRA) property (formerly Parcel A) currently under development. The topography of the SFRA property is hilly and separated from the flat lowland area comprising Parcel UC3 by intermittent

retaining walls at the base of the slope. On the south, Parcel UC3 is bounded by HPNS Parcels G and E, and by private property located within the City of San Francisco limits.

The present-day configuration of the storm drain and sanitary sewer systems at HPNS was the result of an evolutionary process that likely caused radiological contamination from the same sources to impact piping and other components of the storm drain and sanitary sewer systems. Because the storm drain and sanitary sewer pipelines were not sealed, some leaking was anticipated, and historical information indicated that the pipelines often were cleaned by power washing that may have forced radiological contamination into the surrounding soil. Based on historical documentation, the radionuclides of concern (ROCs) selected for the Parcel UC3 storm drain and sanitary sewer systems included cesium-137 (Cs-137), radium-226 (Ra-226), and strontium-90 (Sr-90).

Based on the radiological operational history described in the HRA (NAVSEA 2004) and site-specific investigative data, the DON determined that potential low-level radioactive contamination in some buildings, storm drain and sanitary sewer lines, soil, debris, and slag material at HPNS required a response action. This decision is documented in the final "Base-wide Radiological Removal Action, Action Memorandum" (AM) (DON 2006). The AM was revised and updated to implement the recommendations of the HRA (NAVSEA 2004). The release criteria and remediation goals for HPNS localized radioactive contamination established in the AM were considered to be the most conservative available. The radiological release criteria were based on the Nuclear Regulatory Commission 25 millirems per year (mrem/y) dose or were otherwise risk based.

Fieldwork for the Parcel UC3 storm drain and sanitary sewer TCRA was initiated on December 15, 2009 and continued through June 2011. Prior to initiating excavation of the storm drain and sanitary sewer systems, several utilities including water, natural gas, fiber optic communication lines, storm drain and sanitary sewer lines, and electrical power were relocated. Access roads were constructed to support tenant and DON operations following closure of Crisp Road.

Excavation of the Parcel UC3 storm drain and sanitary sewer systems was initiated on March 5, 2010 and the last truckload of soil was excavated on October 4, 2010. Excavation of the Parcel UC3 storm drain and sanitary sewer systems piping resulted in the designation of 21 trench survey units. In total, 18,363 linear feet of trench (inclusive of soil, pipes, and manholes) was excavated during the TCRA activities. The maximum depths of the excavated trenches ranged between 2 feet and 18 feet below ground surface. At the completion of the excavation activities, the total area of the excavated trench surfaces (exposed sidewalls and bottom) in Parcel UC3 was 16,068 m^2 with 9,212 linear feet of trench.

The soils overlying the storm drain and sanitary sewer pipes and approximately 1 foot of soil surrounding each pipe and manhole were excavated and transferred to radiological screening

yards (RSYs) for processing. This excavated soil often included small sections of crumbled pipe and crushed manhole pieces that were processed along with the soil. In total, 1,502 truckloads (approximately 18,024 cubic yards) of soil were excavated and transferred to the RSYs for radiological processing during the Parcel UC3 TCRA.

A total of 66 screening pads containing soil derived from the Parcel UC3 storm drain and sanitary sewer systems excavation activities were radiologically processed in the RSYs during the removal action. During radiological processing, surface surveys were conducted and soil samples were collected and submitted to the laboratory for analysis. Soils in the vicinity of contaminated samples were remediated. In total, 2,837 soil samples were collected from the Parcel UC3 excavated soil survey units radiologically processed in the RSYs during the removal action activities and analyzed by gamma spectroscopy. Approximately 789 cubic yards of soil that exceeded the radiological release criteria was remediated from these excavated soil survey units. The contaminated soils removed from the Parcel UC3 screening pads during processing were placed in low-level radioactive waste (LLRW) bins for off-site disposal by the DON radiological waste contractor. The radionuclide contamination concentrations identified in the soil samples collected from the Parcel UC3 screening pads processed in the RSYs were limited to Ra-226 and Cs-137. No concentrations above the release criterion were identified for Sr-90 in the excavated soil survey units processed in the RSYs. None of the final 18 systematic Final Status Survey (FSS) soil sample analytical results identified the presence of residual radioactivity above the release criteria in the excavated soil survey units for any ROC. The majority of the Parcel UC3 radiologically surveyed and released excavated soil survey units processed in the RSYs were backfilled into appropriate trenches with the concurrence of the Radiological Affairs Support Office.

Radiological surveys were performed for 251 sections of pipe removed from the Parcel UC3 trenches with no results indicating the presence of elevated concentrations. At the direction of the DON, no radiological surveys were performed on manholes excavated from the Parcel UC3 storm drain and sanitary sewer systems trenches due to the limited quantity removed and to expedite completion of the main HPNS traffic thoroughfare. The concrete and brick forming the walls of 41 manholes excavated from the Parcel UC3 trenches were crushed and the debris placed in LLRW bins for disposal by the DON radiological waste contractor.

A sufficient volume of sediment for sample collection and analysis was obtained from nine sections of pipe and seven manholes during the Parcel UC3 removal action for laboratory analysis. The analytical results identified the presence of Cs-137 contamination in four sections of pipe and two manholes. No Ra-226 or Sr-90 contamination was identified in any of the sediment samples analyzed. Pipes and manholes associated with sediment sample analytical results that exceeded the Cs-137 release criterion were placed in LLRW bins for off-site disposal by the DON radiological waste contractor.

The majority of the storm drain and sanitary sewer pipe sections and bricks and/or concrete that formed the manhole sidewalls were excavated; however, small sections of piping were left in place following the completion of the TCRA. Radiological surveys performed on the piping remaining in place did not identify elevated results. Based on these radiological survey results and other data generated during the TCRA activities, the DON concluded that the piping remaining in place was unlikely to be contaminated.

Numerous soil samples were collected from the sidewalls and bottoms of the 21 excavated trench survey units to determine whether radionuclide contamination was present above the release criteria. A total of 514 soil samples were collected from the exposed surfaces of the 21 designated trench survey units and analyzed by the laboratory. Based on the analytical results, approximately 1,090 cubic yards of soil was remediated from the Parcel UC3 trench survey units and either placed in LLRW bins for off-site disposal or transferred to the RSYs for radiological processing to reduce the overall volume of LLRW generated at HPNS. The LLRW bins were transported off-site by the DON radiological waste contractor to either the U.S. Ecology facility in Idaho or the Energy Solutions facility in Clive, Utah.

The objective of the storm drain and sanitary sewer FSS activities was to demonstrate that identified residual radioactivity levels inside the excavated trench and within the material used as backfill met the release criteria. These results were documented in Survey Unit Project Reports (SUPRs) prepared for each of the 21 trench survey units. Each of the Parcel UC3 draft SUPRs previously was provided to the U.S. Environmental Protection Agency, the California Department of Toxic Substances Control, and the Department of Public Health, Environmental Management Branch, who submitted comments that were addressed in the final SUPRs. Approval of the final SUPRs will occur as part of the regulatory review and concurrence with this Radiological RACR. During the Parcel UC3 TCRA, a total of 378 FSS soil samples were collected from the sidewalls and bottoms of each trench survey unit and analyzed by the laboratory. None of the 378 final FSS soil sample analytical results indicated the presence of residual radioactivity in the trench survey units above the release criteria for any ROC. These FSS results were then used for dose and risk modeling to facilitate regulatory agency concurrence for unrestricted radiological release.

The results of the modeling efforts for the 21 trench survey units in Parcel UC3 fall within the acceptable National Oil and Hazardous Substances Pollution Contingency Plan risk management range of 10^{-6} to 10^{-4}, which supports radiological free release. Based on the dose and risk modeling results, the highest net dose to workers or members of the public as a result of exposures to residual radioactive material in soil on Parcel UC3 was identified in Trench Survey Unit 182 at 6.088 mrem/y with an excess lifetime cancer risk of 9.672×10^{-5}.

ED_006787_00017608-00008

The environmental as low as reasonably achievable (ALARA) process was implemented for each of the 21 trench survey units in addition to the dose and risk modeling efforts. ALARA analyses were performed based on recent estimates of dose to the public from HPNS operations. Based on qualitative ALARA analyses, excavation projects that could cause the potential dose to the public to exceed 1 millirem (individual) or 10 person-rem (collective) are subjected to quantitative ALARA analyses. To date, no Parcel UC3 operations at HPNS have resulted in an individual dose to the public greater than 1 mrem or a collective dose greater than 10 person-rem. Qualitative ALARA analyses did not result in any gamma measurements above the investigation levels, and none of the FSS sample results identified residual radioactivity above the release criteria for any ROC. In addition, air sampling results did not exceed 10 percent of the derived air concentration and the processed personnel dosimetry badges did not identify a single gamma dose above background levels.

Archaeological monitoring for the Parcel UC3 storm drain and sanitary sewer systems TCRA was conducted along Crisp Road in August 2010 by qualified archaeologists and archaeological technicians. No cultural materials were observed during the monitoring activities and no cultural resources were encountered or disturbed during construction. Because no new resources were identified, no assessment or treatment actions were required.

Chemical contamination at HPNS is addressed through the Installation Restoration (IR) Program process. There are a total of three IR Program sites associated with the Parcel UC3 storm drain and sanitary sewer systems. Samples of excavated soil derived from IR Program sites were collected and sent to the off-site laboratory for chemical analysis to verify whether the excavated material met the established acceptance/reuse criteria. Based on the analytical results, soils that did not meet the appropriate criteria were stockpiled for collection and off-site disposal by the DON non-LLRW contractor, along with non-IR Program soil that exhibited odor or staining.

The objective of the TCRA was to protect the public health and welfare, and the environment from actual or potential releases of radiologic contaminants, prevent exposure to residual ROCs in concentrations that exceed remediation goals for the ingestion or inhalation exposure pathways, achieve radiological release for unrestricted use of Parcel UC3, and support preparation of the ROD. As demonstrated by the information presented in each of the 21 SUPRs and summarized in this Radiological RACR, none of the final 18 systematic FSS soil samples collected from each of the designated trench survey units or the excavated soil survey units/imported fill used as backfill material identified the presence of residual radioactivity above the release criteria established in the AM (DON 2006) for any ROC.

Based on the results of the storm drain and sanitary sewer systems TCRA, the analytical results for the final 18 systematic FSS soil samples collected from each of the 21 trench survey units, residual dose and risk modeling efforts, and the implementation of the ALARA process presented in the SUPRs, the DON's stated objective was achieved. The information presented in

this Radiological RACR and each of the 21 trench SUPRs confirms the DON's conclusion that Parcel UC3 is ready for unconditional, unrestricted radiological free release and supports preparation of the ROD and the Proposed Plan.

ED_006787_00017608-00010

TABLE OF CONTENTS

PAGE

EXECUTIVE SUMMARY ES-1

ABBREVIATIONS AND ACRONYMS xi

1.0 INTRODUCTION 1-1
- 1.1 HUNTERS POINT NAVAL SHIPYARD LOCATION AND DESCRIPTION 1-2
- 1.2 PARCEL UC3 SITE DESCRIPTION 1-2
- 1.3 PARCEL UC3 CURRENT AND FUTURE LAND USE 1-3
- 1.4 PHOTOGRAPHS 1-3
- 1.5 PURPOSE AND ORGANIZATION OF REPORT 1-3

2.0 BACKGROUND 2-1
- 2.1 HISTORY 2-1
- 2.2 CONCEPTUAL SITE MODEL 2-2
- 2.3 RELEASE CRITERIA, REMEDIATION GOALS, AND OBJECTIVE 2-3
- 2.4 SUPPORTING DOCUMENTS SUMMARY 2-4
  - 2.4.1 Base-wide Radiological Work Plan 2-4
  - 2.4.2 Base-wide Storm Drain and Sanitary Sewer Removal Work Plan 2-5
  - 2.4.3 Basewide Archaeological Monitoring and Discovery Plan 2-7
  - 2.4.4 Execution Plan 2-7
  - 2.4.5 Survey Unit Project Reports 2-8
  - 2.4.6 Final Survey Unit Project Reports Abstract 2-9
  - 2.4.7 U.S. Environmental Protection Agency Acceptance of On-Site Laboratory Results 2-10

3.0 STORM DRAIN AND SANITARY SEWER REMOVAL OVERVIEW 3-1
- 3.1 PRE-EXCAVATION FIELD ACTIVITIES 3-2
  - 3.1.1 Crisp Road Utility Relocation 3-3
- 3.2 PARCEL UC3 REMOVAL ACTION ACTIVITIES 3-5
  - 3.2.1 Soil Excavation 3-5
  - 3.2.2 Excavated Soil Radiological Processing 3-6
  - 3.2.3 Pipe and Manhole Survey Activities 3-8
  - 3.2.4 Pipe and Manhole Sediments 3-8
  - 3.2.5 Piping Remaining In Place 3-9
  - 3.2.6 Trench Sampling and Remediation Activities 3-9
  - 3.2.7 Trench Final Status Survey Activities 3-10
  - 3.2.8 Dose and Risk Modeling 3-11
  - 3.2.9 As Low As Reasonably Achievable Process 3-11
- 3.3 IMPORTED FILL 3-12
- 3.4 ARCHAEOLOGICAL MONITORING 3-12
- 3.5 INSTALLATION RESTORATION PROGRAM SITES 3-13

TABLE OF CONTENTS
(Continued)

PAGE

4.0 WORK AREA 16 WEST 4-1
4.1 TRENCH SURVEY UNIT 166 4-1
4.1.1 TU166 Removal Action Activities 4-2
4.1.2 TU166 Piping Remaining in Place 4-3
4.1.3 TU166 FSS Summary 4-3
4.1.4 TU166 Backfill Activities 4-4
4.2 TRENCH SURVEY UNIT 172 4-4
4.2.1 TU172 Removal Action Activities 4-4
4.2.2 TU172 Piping Remaining in Place 4-5
4.2.3 TU172 FSS Summary 4-5
4.2.4 TU172 Backfill Activities 4-6
4.3 TRENCH SURVEY UNIT 173 4-6
4.3.1 TU173 Removal Action Activities 4-6
4.3.2 TU173 Piping Remaining in Place 4-7
4.3.3 TU173 FSS Summary 4-8
4.3.4 TU173 Backfill Activities 4-8
4.4 TRENCH SURVEY UNIT 177 4-9
4.4.1 TU177 Removal Action Activities 4-9
4.4.2 TU177 Piping Remaining in Place 4-10
4.4.3 TU177 FSS Summary 4-11
4.4.4 TU177 Backfill Activities 4-11
4.5 TRENCH SURVEY UNIT 178 4-12
4.5.1 TU178 Removal Action Activities 4-12
4.5.2 TU178 Piping Remaining in Place 4-14
4.5.3 TU178 FSS Summary 4-14
4.5.4 TU178 Backfill Activities 4-15
4.6 TRENCH SURVEY UNIT 179 4-15
4.6.1 TU179 Removal Action Activities 4-16
4.6.2 TU179 Piping Remaining in Place 4-17
4.6.3 TU179 FSS Summary 4-17
4.6.4 TU179 Backfill Activities 4-18
4.7 TRENCH SURVEY UNIT 180 4-18
4.7.1 TU180 Removal Action Activities 4-19
4.7.2 TU180 Piping Remaining in Place 4-20
4.7.3 TU180 FSS Summary 4-20
4.7.4 TU180 Backfill Activities 4-20
4.8 TRENCH SURVEY UNIT 181 4-21
4.8.1 TU181 Removal Action Activities 4-22
4.8.2 TU181 Piping Remaining in Place 4-22
4.8.3 TU181 FSS Summary 4-23
4.8.4 TU181 Backfill Activities 4-23

TABLE OF CONTENTS
(Continued)

PAGE

5.0 WORK AREA 16 CENTRAL 5-1
5.1 TRENCH SURVEY UNIT 170 5-1
5.1.1 TU170 Removal Action Activities 5-2
5.1.2 TU170 Piping Remaining in Place 5-3
5.1.3 TU170 FSS Summary 5-3
5.1.4 TU170 Backfill Activities 5-4
5.2 TRENCH SURVEY UNIT 175 5-4
5.2.1 TU175 Removal Action Activities 5-5
5.2.2 TU175 Piping Remaining in Place 5-6
5.2.3 TU175 FSS Summary 5-6
5.2.4 TU175 Backfill Activities 5-7
5.3 TRENCH SURVEY UNIT 176 5-8
5.3.1 TU176 Removal Action Activities 5-8
5.3.2 TU176 Piping Remaining in Place 5-9
5.3.3 TU176 FSS Summary 5-9
5.3.4 TU176 Backfill Activities 5-10
5.4 TRENCH SURVEY UNIT 182 5-10
5.4.1 TU182 Removal Action Activities 5-11
5.4.2 TU182 Piping Remaining in Place 5-12
5.4.3 TU182 FSS Summary 5-12
5.4.4 TU182 Backfill Activities 5-12
5.5 TRENCH SURVEY UNIT 183 5-13
5.5.1 TU183 Removal Action Activities 5-14
5.5.2 TU183 Piping Remaining in Place 5-15
5.5.3 TU183 FSS Summary 5-15
5.5.4 TU183 Backfill Activities 5-15

6.0 WORK AREA 16 EAST 6-1
6.1 TRENCH SURVEY UNIT 169 6-1
6.1.1 TU169 Removal Action Activities 6-1
6.1.2 TU169 Piping Remaining in Place 6-3
6.1.3 TU169 FSS Summary 6-4
6.1.4 TU169 Backfill Activities 6-4
6.2 TRENCH SURVEY UNIT 174 6-5
6.2.1 TU174 Removal Action Activities 6-5
6.2.2 TU174 Piping Remaining in Place 6-6
6.2.3 TU174 FSS Summary 6-6
6.2.4 TU174 Backfill Activities 6-7
6.3 TRENCH SURVEY UNIT 184 6-8
6.3.1 TU184 Removal Action Activities 6-8
6.3.2 TU184 Piping Remaining in Place 6-9
6.3.3 TU184 FSS Summary 6-9

TABLE OF CONTENTS
(Continued)

PAGE

6.3.4 TU184 Backfill Activities 6-10
6.4 TRENCH SURVEY UNIT 185 6-11
6.4.1 TU185 Removal Action Activities 6-11
6.4.2 TU185 Piping Remaining in Place 6-12
6.4.3 TU185 FSS Summary 6-12
6.4.4 TU185 Backfill Activities 6-13
6.5 TRENCH SURVEY UNIT 187 6-13
6.5.1 TU187 Removal Action Activities 6-14
6.5.2 TU187 Piping Remaining in Place 6-15
6.5.3 TU187 FSS Summary 6-15
6.5.4 TU187 Backfill Activities 6-16
6.6 TRENCH SURVEY UNIT 188 6-17
6.6.1 TU188 Removal Action Activities 6-18
6.6.2 TU188 Piping Remaining in Place 6-18
6.6.3 TU188 FSS Summary 6-18
6.6.4 TU188 Backfill Activities 6-19
6.7 TRENCH SURVEY UNIT 189 6-20
6.7.1 TU189 Removal Action Activities 6-20
6.7.2 TU189 Piping Remaining in Place 6-21
6.7.3 TU189 FSS Summary 6-21
6.7.4 TU189 Backfill Activities 6-22
6.8 TRENCH SURVEY UNIT 190 6-22
6.8.1 TU190 Removal Action Activities 6-23
6.8.2 TU190 Piping Remaining in Place 6-24
6.8.3 TU190 FSS Summary 6-24
6.8.4 TU190 Backfill Activities 6-25

7.0 SITE RESTORATION AND INFILTRATION TRENCH CONSTRUCTION 7-1
7.1 SITE RESTORATION 7-1
7.2 TEMPORARY INFILTRATION TRENCH CONSTRUCTION 7-2

8.0 PARCEL UC3 REMOVAL ACTION COST SUMMARY 8-1

9.0 CONCLUSIONS AND RECOMMENDATION 9-1
9.1 RECOMMENDATION 9-6

10.0 REFERENCES 10-1

TABLE OF CONTENTS
(Continued)

TABLES

Table 2-1	Release Criteria (Action Memorandum)
Table 2-2	Storm Drain and Sanitary Sewer Release Criteria (Survey Unit Project Reports Abstract)
Table 3-1	Parcel UC3 Trench Survey Unit Data Summary
Table 3-2	Parcel UC3 Survey Units and Associated Trench Segment Data
Table 3-3	Parcel UC3 Excavated Soil Summary
Table 3-4	Parcel UC3 Radiological Screening Yard Excavated Soil Processing Summary
Table 3-5	Parcel UC3 Excavated Pipe and Manhole Radiological Surveys and Disposition Summary
Table 3-6	Parcel UC3 Pipe and Manhole Sediment Samples and Disposition Summary
Table 3-7	Parcel UC3 Storm Drain and Sanitary Sewer Piping Remaining In Place
Table 3-8	Parcel UC3 Trench Survey Unit Remediation Summary
Table 3-9	Parcel UC3 Installation Restoration Program Site Chemicals of Concern

FIGURES

Figure 1-1	Regional Location Map
Figure 1-2	Hunters Point Naval Shipyard Parcel Locations
Figure 3-1	Parcel UC3 Storm Drain and Sanitary Sewer Systems
Figure 3-2	Parcel UC3 Work Area Boundaries and Trench Survey Units
Figure 4-1	Work Area 16 West Trench Survey Units
Figure 5-1	Work Area 16 Central Trench Survey Units
Figure 5-2	Work Area 16 Central Elevated Sample Locations Prior to Remediation
Figure 6-1	Work Area 16 East Trench Survey Units
Figure 6-2	Work Area 16 East Elevated Sample Locations Prior to Remediation

TABLE OF CONTENTS
(Continued)

Figure 7-1 Infiltration Trench and Catch Basin Locations on Crisp Road

Figure 7-2 Catch Basin and Infiltration Trench Details

PHOTOGRAPHS

Photograph 1-1 Asphalt removal on Crisp Road prior to excavation of Parcel UC3 storm drain and sanitary sewer

Photograph 1-2 Excavation of Trench Survey Unit 166

Photograph 1-3 Excavation of pipe in trench segment 03-E16-00-1C on Crisp Road

Photograph 1-4 Field Engineers mapping Trench Survey Unit 174

Photograph 1-5 Back wall of Manhole MH502 left in place to avoid undermining retaining wall

Photograph 1-6 Pipe sections removed from Trench Survey Unit 166 and staged on plastic pending further activities

Photograph 1-7 Excavation of Trench Survey Unit 172

Photograph 1-8 Excavation of Trench Survey Unit 187

APPENDICES

Appendix A Final Survey Unit Project Reports Abstract (SUPRA) (on CD only)

- Final Survey Unit Project Reports Abstract, Revision 3
  DCN: EMAC-8823-0003-0100.R3
  NAVFAC Restoration Record Number N00217-003550

Appendix B Pipe and Manhole Radiological Survey Results (on CD only)

Appendix C Sediment Sample Laboratory Analytical Results (on CD only)

Appendix D EPA Acceptance of Hunters Point On-Site Laboratory Results for Radiological Analysis (on CD only)

Appendix E Installation Restoration Program Site Chemical Laboratory Analytical Results and Comparison (on CD only)

TABLE OF CONTENTS
(Continued)

Appendix F — Parcel UC3 West Survey Unit Project Reports (Trench Survey Units 166, 172, 173, 177, 178, 179, 180, and 181) (on CD only)

- Final Survey Unit 166 Project Report
  DCN: EMAC-8823-0003-0077
  NAVFAC Restoration Record Number N00217-002841
- Final Survey Unit 172 Project Report
  DCN: EMAC-8823-0003-0080
  NAVFAC Restoration Record Number N00217-002857
- Final Survey Unit 173 Project Report
  DCN: EMAC-8823-0003-0085
  NAVFAC Restoration Record Number N00217-002889
- Final Survey Unit 177 Project Report
  DCN: EMAC-8823-0003-0091
  NAVFAC Restoration Record Number N00217-003318
- Final Survey Unit 178 Project Report
  DCN: EMAC-8823-0003-0092
  NAVFAC Restoration Record Number N00217-003350
- Final Survey Unit 179 Project Report
  DCN: EMAC-8823-0003-0093
  NAVFAC Restoration Record Number N00217-003363
- Final Survey Unit 180 Project Report
  DCN: EMAC-8823-0003-0081
  NAVFAC Restoration Record Number N00217-002865
- Final Survey Unit 181 Project Report
  DCN: EMAC-8823-0003-0082
  NAVFAC Restoration Record Number N00217-002870

Appendix G — Parcel UC3 Central Survey Unit Project Reports (Trench Survey Units 170, 175, 176, 182, and 183) (on CD only)

- Final Survey Unit 170 Project Report
  DCN: EMAC-8823-0003-0079
  NAVFAC Restoration Record Number N00217-002856
- Final Survey Unit 175 Project Report
  DCN: EMAC-8823-0003-0087
  NAVFAC Restoration Record Number N00217-002894
- Final Survey Unit 176 Project Report
  DCN: EMAC-8823-0003-0088
  NAVFAC Restoration Record Number N00217-002900

ED_006787_00017608-00017

TABLE OF CONTENTS
(Continued)

- Final Survey Unit 182 Project Report
  DCN: EMAC-8823-0003-0094
  NAVFAC Restoration Record Number N00217-003393
- Final Survey Unit 183 Project Report
  DCN: EMAC-8823-0003-0095
  NAVFAC Restoration Record Number N00217-003407

Appendix H Parcel UC3 East Survey Unit Project Reports (Trench Survey Units 169, 174, 184, 185, 187, 188, 189, and 190) (on CD only)

- Final Survey Unit 169 Project Report
  DCN: EMAC-8823-0003-0078
  NAVFAC Restoration Record Number N00217-002842
- Final Survey Unit 174 Project Report
  DCN: EMAC-8823-0003-0086
  NAVFAC Restoration Record Number N00217-002893
- Final Survey Unit 184 Project Report
  DCN: EMAC-8823-0003-0096
  NAVFAC Restoration Record Number N00217-003442
- Final Survey Unit 185 Project Report
  DCN: EMAC-8823-0003-0083
  NAVFAC Restoration Record Number N00217-002871
- Final Survey Unit 187 Project Report
  DCN: EMAC-8823-0003-0097
  NAVFAC Restoration Record Number N00217-003448
- Final Survey Unit 188 Project Report
  DCN: EMAC-8823-0003-0084
  NAVFAC Restoration Record Number N00217-002885
- Final Survey Unit 189 Project Report
  DCN: EMAC-8823-0003-0098
  NAVFAC Restoration Record Number N00217-003460
- Final Survey Unit 190 Project Report
  DCN: EMAC-8823-0003-0099
  NAVFAC Restoration Record Number N00217-003465

Appendix I Parcel UC3 Swale Debris Radiological Survey Reports (on CD only)

Appendix J Compaction Test Results (on CD only)

TABLE OF CONTENTS
(Continued)

Appendix K — Final Parcel UC3 Crisp Road Utilities Completion Report (on CD only)

- Final Parcel UC3 Crisp Road Utilities Completion Report
  DCN: EMAC-8823-0003-0076
  NAVFAC Restoration Record Number N00217-003303

Appendix L — Final Archaeological Monitoring Summary Report (on CD only)

- Final Archaeological Monitoring Summary Report
  DCN: EMAC-8823-0003-0090
  NAVFAC Restoration Record Number N00217-003581

Appendix M — Imported Fill Laboratory Analytical Results and Data Evaluation (on CD only)

Appendix N — Response to Comments on the Draft Parcel UC3 RACR

This page intentionally left blank.

ED_006787_00017608-00020

ABBREVIATIONS AND ACRONYMS

ALARA	as low as reasonably achievable
AM	Action Memorandum
ARAR	applicable or relevant and appropriate requirement
ASTM	American Society for Testing and Materials
bgs	below ground surface
CDPH	California Department of Public Health, Environmental Management Branch
CERCLA	Comprehensive Environmental Response, Compensation, and Liability Act
CIP	cast iron pipe
Cs-137	cesium-137
CSM	Conceptual Site Model
CTO	Contract Task Order
DIP	ductile iron pipe
DON	Department of the Navy
DTSC	(California) Department of Toxic Substances Control
EPA	U.S. Environmental Protection Agency
FSS	Final Status Survey
GPS	Global Positioning System
HPNS	Hunters Point Naval Shipyard
HRA	Historical Radiological Assessment
IR	Installation Restoration
LLRW	low-level radioactive waste
m^2	square meter
MARSSIM	Multi-Agency Radiation Survey and Site Investigation Manual
MDL	method detection limit
mrem/y	millirems per year
NAVSEA	Naval Sea Systems Command
NCP	National Oil and Hazardous Substances Pollution Contingency Plan
NRC	Nuclear Regulatory Commission
NRDL	Naval Radiological Defense Laboratory

ED_006787_00017608-00021

ABBREVIATIONS AND ACRONYMS
(Continued)

pCi/g	picocuries per gram
Ra-226	radium-226
RACR	Removal Action Completion Report
RASO	Radiological Affairs Support Office
ROC	radionuclide of concern
ROD	Record of Decision
RSO	Radiation Safety Officer
RSY2	Radiological Screening Yard 2
RSY3	Radiological Screening Yard 3
RSY4	Radiological Screening Yard 4
SAP	Sampling and Analysis Plan
SARA	Superfund Amendments and Reauthorization Act of 1986
SFRA	San Francisco Redevelopment Agency
Sr-90	strontium-90
SUPR	Survey Unit Project Report
SUPRA	Survey Unit Project Reports Abstract
TCRA	time-critical removal action
TtEC	Tetra Tech EC, Inc.
TU	Trench Survey Unit
UC1	Utility Corridor 1
UC2	Utility Corridor 2
UC3	Utility Corridor 3
VCP	vitreous clay pipe
VSP	Visual Sample Plan

ED_006787_00017608-00022

1.0 INTRODUCTION

The U.S. Department of the Navy (DON) directed Tetra Tech EC, Inc. (TtEC) to prepare this Radiological Removal Action Completion Report (RACR) to describe and summarize the storm drain and sanitary sewer systems time-critical removal action (TCRA) activities performed for Parcel Utility Corridor 3 (UC3) within Hunters Point Naval Shipyard (HPNS) located in San Francisco, California. The Parcel UC3 radiological TCRA was performed to protect the public health and welfare, and the environment from actual or potential releases of radiologic contaminants. The results of the implemented TCRA activities are described in this Radiological RACR. Except in relation to reuse as potential backfill material or waste characterization for disposal of excavated soil derived from removal of the Parcel UC3 storm drain and sanitary sewer systems, this Radiological RACR does not address chemical contamination and does not include or affect any other designated HPNS parcels.

Although currently defined as Crisp Road (Work Area 16), the property at HPNS to be designated as Parcel UC3 has not yet been established by the DON as a separate land parcel. Once the Proposed Plan is approved, the results of the implemented TCRA activities documented in this Radiological RACR will support preparation of the Parcel UC3 Record of Decision (ROD). For presentation in this Radiological RACR, the Work Area 16 property defined as Crisp Road is referred to as Parcel UC3 and has been further divided into Work Area 16 West, Work Area 16 Central, and Work Area 16 East. No buildings or former building sites are associated with Parcel UC3.

The Parcel UC3 storm drain and sanitary sewer systems TCRA activities were directed by the DON, Naval Facilities Engineering Command Southwest with the support of the Radiological Affairs Support Office (RASO) under Contract No. N62473-08-D-8823 and Contract Task Order (CTO) No. 0003. The excavated soils removed from the Parcel UC3 storm drain and sanitary sewer systems trenches were processed in Radiological Screening Yard 2 (RSY2), Radiological Screening Yard 3 (RSY3), and Radiological Screening Yard 4 (RSY4) under multiple contracts and task orders including Contract No. N68711-98-D-5713 (CTO 0072), Contract No. N62473-07-D-3211 (CTO 0018), and Contract No. N62473-10-D-0809 (CTO 0004).

The Parcel UC3 storm drain and sanitary sewer systems TCRA was conducted in accordance with the requirements of the Comprehensive Environmental Response, Compensation, and Liability Act of 1980 (CERCLA) as amended by the Superfund Amendments and Reauthorization Act (SARA) of 1986 and, to the extent practicable, the National Oil and Hazardous Substances Pollution Contingency Plan (NCP).

1.1 HUNTERS POINT NAVAL SHIPYARD LOCATION AND DESCRIPTION

The HPNS site lies entirely within the corporate boundaries of the County of San Francisco, at the southeast corner of the City of San Francisco, California (Figure 1-1). The site encompasses approximately 848 acres including about 416 acres on land situated on a 2-mile-long promontory projecting southeastward into San Francisco Bay. The remaining 432 acres constitute the adjacent offshore areas.

In 1992, the DON divided HPNS into five contiguous parcels (A through E) to expedite remedial action activities and land reuse. Parcel F was designated in 1996 and encompasses the offshore areas and a small portion of the onshore areas adjacent to San Francisco Bay. The DON designated the landfill area in Parcel E as Parcel E-2 in September 2004. Subsequently, Parcel A was transferred to the City and County of San Francisco for redevelopment. In July 2008, the DON again divided HPNS into eight parcels (B, C, D-1, D-2, E, E-2, G, and F) and three utility corridors identified as Utility Corridor 1 (UC1), Utility Corridor 2 (UC2), and UC3 (Figure 1-2). Parcels B, C, D-1, D-2, E, E-2, G, UC1, UC2, and UC3 encompass the onshore areas.

Based on the HPNS radiological operational history described in the final "Historical Radiological Assessment, Volume II" (HRA) prepared by the Naval Sea Systems Command (NAVSEA) in 2004 (NAVSEA 2004) and site-specific investigative data, the DON determined that potential low-level radioactive contamination in soils and debris at HPNS required a response action. This decision is documented in the final "Base-wide Radiological Removal Action, Action Memorandum" (AM) (DON 2006). The AM was revised and updated to implement the recommendations of the HRA (NAVSEA 2004).

1.2 PARCEL UC3 SITE DESCRIPTION

Parcel UC3 is located in the northwest portion of HPNS and, along with Parcels UC1 and UC2, constitute the main traffic thoroughfare for tenant access and DON operations. This traffic thoroughfare consists of Robinson Street and Fisher Avenue (Parcel UC2), Spear Avenue (Parcel UC1), and Crisp Road (Parcel UC3). Figure 1-2 depicts the location of Parcel UC3 within the context of HPNS.

For presentation in this Radiological RACR, the radiological removal action activities performed follow the HRA (NAVSEA 2004) and do not impact other portions of Parcel UC3 property that extend west of the Crisp Road, Griffith Street, and Palou Avenue intersection. This Radiological RACR is limited to the approximately 45,407 square meters (m^2) of Parcel UC3 that extends the length of Crisp Road at HPNS. Beginning at the intersection of Crisp Road, I Street, and Spear and 6th Avenues, the radiologically impacted storm drain and sanitary sewer systems removal action activities continued along Crisp Road toward the west and terminated near the HPNS west gate at the intersection of Crisp Road, Griffith Street, and Palou Avenue. No further

radiologically impacted HPNS storm drain or sanitary sewer systems extend beyond this intersection.

Parcel UC3 is bounded on the north by the San Francisco Redevelopment Agency (SFRA) property (formerly Parcel A) currently under development and on the east by HPNS Parcel UC1. The topography of the SFRA property is hilly and separated from the flat lowland area comprising Parcel UC3 by intermittent retaining walls at the base of the slope. On the south, Parcel UC3 is bounded by HPNS Parcels G and E, and by private property located within the City of San Francisco limits.

The flat lowlands of Parcel UC3 were constructed by placing borrowed fill material from various sources, including crushed serpentinite bedrock from the adjacent highland and dredged sediments. The serpentinite bedrock and serpentine bedrock-derived fill material consist of minerals that naturally contain asbestos and relatively high concentrations of arsenic, manganese, nickel, and other metals. Surface elevations range between 0 and 5 feet above mean sea level and the Parcel UC3 ground surface is typically asphalt-paved and concrete-curbed. The Parcel UC3 ecology is limited to plant and animal species adapted to an industrial environment. No threatened or endangered species are known to inhabit Parcel UC3 or its immediate vicinity.

Three Installation Restoration (IR) Program sites are associated with Parcel UC3. These IR Program sites include IR-04, IR-56, and IR-74 and are discussed in Section 3.5 and in each of the affected trench survey unit sections of this Radiological RACR.

1.3 PARCEL UC3 CURRENT AND FUTURE LAND USE

Based on the HPNS Redevelopment Plan (SFRA 1997), Parcel UC3 will serve as an access street and utility corridor for future development. Currently, Parcel UC3 is asphalt-paved with concrete curbs and no buildings or former building sites are associated with the property.

1.4 PHOTOGRAPHS

The work performed during the Parcel UC3 TCRA was well documented using a photographic record. Photographs of typical operations, processes, and procedures performed during the Parcel UC3 radiological fieldwork are provided in this Radiological RACR prior to the appendices.

1.5 PURPOSE AND ORGANIZATION OF REPORT

The purpose of this Radiological RACR is to describe and summarize the results of the radiological work performed on Parcel UC3 to protect the public health and welfare, and the environment from actual or potential releases of radiologic contaminants and document the results to support preparation of the ROD. This Radiological RACR is organized as follows:

- Section 1.0 Introduction – Section 1.0 provides project information including descriptions of HPNS and Parcel UC3, the current and future land use of the property, fieldwork photographic documentation, and the purpose and organization of the Radiological RACR document.
- Section 2.0 Background – Section 2.0 places Parcel UC3 within context of HPNS by presenting an abbreviated history of the storm drain and sanitary sewer systems, discussing the transport of radionuclides at HPNS, identifying the release criteria and remediation goals, and summarizing the various documents that support the radiological work performed.
- Section 3.0 Storm Drain and Sanitary Sewer Removal Overview – Section 3.0 provides an overview of the Parcel UC3 storm drain and sanitary sewer TCRA. This section summarizes the procedures for performance of the work activities, identifies those activities common to each of the trench survey units, describes the archaeological monitoring results, and discusses the IR Program sites associated with Parcel UC3.
- Section 4.0 Work Area 16 West – Section 4.0 details the storm drain and sanitary sewer removal activities for Trench Survey Units 166, 172, 173, 177, 178, 179, 180, and 181.
- Section 5.0 Work Area 16 Central – Section 5.0 details the storm drain and sanitary sewer removal activities for Trench Survey Units 170, 175, 176, 182, and 183.
- Section 6.0 Work Area 16 East – Section 6.0 details the storm drain and sanitary sewer removal activities for Trench Survey Units 169, 174, 184, 185, 187, 188, 189, and 190.
- Section 7.0 Site Restoration and Infiltration Trench Construction – Section 7.0 describes the site restoration activities completed for Parcel UC3 including installation of the temporary stormwater swale system.
- Section 8.0 Parcel UC3 Removal Action Cost Summary – Section 8.0 summarizes the estimated costs associated with implementation and completion of the Parcel UC3 TCRA.
- Section 9.0 Conclusions and Recommendation – Section 9.0 presents the conclusions and recommendation for radiological release for unrestricted use of Parcel UC3.
- Section 10.0 References – Section 10.0 lists the documents and references cited in the Parcel UC3 Radiological RACR.
- Appendices A through N – The individual appendices present information and technical data gathered during performance of the storm drain and sanitary sewer TCRA activities that support the conclusions and recommendation presented in this Radiological RACR. The responses to comments on the draft Parcel UC3 RACR are provided in Appendix N.

ED_006787_00017608-00026

2.0 BACKGROUND

The following sections provide an abbreviated history and pertinent background information leading to the development of the HPNS Conceptual Site Model (CSM) and release criteria. Included are brief descriptions of the supporting documents and reports that guided the Parcel UC3 storm drain and sanitary sewer systems TCRA activities.

2.1 HISTORY

The DON obtained ownership of HPNS for shipbuilding, repair, and maintenance in 1940. HPNS began using radioactive materials in shipyard operations and Naval Radiological Defense Laboratory (NRDL) research projects in the early 1940s. Operations at HPNS included ship decontamination, repair, and dismantling activities that generated radium dial and sandblast grit waste streams. In addition, the DON managed a waste disposal program that included the removal of radioactive materials from HPNS. Between 1946 and 1947, HPNS operations included decontamination activities on ships used during OPERATION CROSSROADS nuclear weapons tests. NRDL activities and projects involved research into decontamination methods, personnel protection, development of radiation detection instrumentation, effects of radiation on living organisms and natural and synthetic materials, and experimentation in decontamination methodologies. The NRDL research projects ended in 1969, and the associated buildings were decontaminated and cleared for unrestricted reuse based on the standards in place at that time. The DON deactivated HPNS operations in 1974 and the property remained largely unused until 1976. HPNS was leased to Triple A Machine Shop, Inc., a private ship repair company, from 1976 to 1986 when its tenancy was terminated. The DON resumed its occupancy of HPNS in 1987.

The present-day configuration of the storm drain and sanitary sewer systems at HPNS is the result of an evolutionary process. These systems were originally designed and built in the 1940s as a combined system, using the same conveyance piping and 40 separate discharge outfalls into San Francisco Bay. This combined system grew in sections from the 1940s to its maximum size in 1958, when it underwent the first in a series of separation projects. The purpose of the separation projects was to provide for installation of dedicated sanitary sewer piping and pump stations that would discharge sanitary sewer effluent off-site to a publicly-owned treatment plant operated by the City and County of San Francisco. A sewage lift station was constructed specifically for conveyance of much of the sanitary sewage; however, stormwater flows from heavy rains would overwhelm the sewage lift station, and much of the sewage and stormwater diverted to various existing outfalls into the San Francisco Bay (DON 2008).

Separation of the storm drain and sanitary sewers involved installation of dedicated sanitary sewer collection piping or diversion structures within the combined system. A total of 28 San Francisco Bay outfalls were converted for exclusive use as stormwater outlets, while 12

ED_006787_00017608-00027

continued to serve as combined outlets. In 1973, the second separation project was undertaken including the removal of some of the stormwater outfalls from the South Basin area, just offshore from the Parcel E shoreline. The last of the separation projects was completed in 1976 and involved the installation of additional dedicated sanitary sewer piping. Complete separation of the combined systems was never achieved, and subsequent inspections revealed that cross-connections may still exist. Due to the evolutionary nature of the separation process, radiological contamination from the same sources may have impacted storm drain and sanitary sewer systems piping and other components.

As a result of historical radiological operations at HPNS, some buildings, storm drain and sanitary sewer lines, soil, debris, and slag material have indicated the potential presence of low-level radioactive contamination. Hazardous materials also have been found at HPNS. Pursuant to CERCLA as amended by SARA, HPNS was placed on the National Priorities List in 1989.

2.2 CONCEPTUAL SITE MODEL

Radioactive material consists of radionuclides that are unstable and undergo spontaneous transformations by releasing energy until a stable state is reached. This transformation process, or radioactive decay, is usually accompanied by the emission of charged particles (e.g., alpha and beta particles) or gamma rays. The radionuclides potentially present at HPNS likely were the result of:

- Burial along with excavated fill materials while increasing the footprint of HPNS
- Residue from decontamination of ships or workers
- Residual contamination as a result of NRDL experiments or tests in structures or land areas
- Residual contamination from shipyard operations
- Release into sanitary sewers and storm drains

The CSM is based on the supposition that radioactive materials likely were discharged from numerous locations throughout HPNS into the storm drain and sanitary sewer systems and may have been released into surrounding soils during the course of normal operations and maintenance or repair activities (DON 2008). Manholes at HPNS have been found to be constructed of concrete and/or brick and appeared to be porous, likely resulting in the transport of contamination into the surrounding soil. Piping at HPNS generally was composed of the following materials:

- Concrete
- Vitreous clay pipe (VCP)

ED_006787_00017608-00028

- Cast iron pipe (CIP)
- Ductile iron pipe (DIP)
- Steel
- Perforated metal
- Polyvinyl chloride plastic
- Concrete-encased VCP

Typically, pipe sections at HPNS were connected by unsealed slip fittings at joints. Some leakage from the piping was anticipated when the storm drain and sanitary sewer systems were installed. Historical information indicates that the storm drain and sanitary sewers often were cleaned by power washing that may have forced radiological contamination out of the piping into the surrounding soils. The most recent power washing event was performed at HPNS in 1999. Power washing of these old sewer systems may easily have caused further cracks or breaks in the piping and subsequent migration of contamination into the surrounding soil. The migration and extent of radiological soil contamination at HPNS likely depended on how and where releases from the storm drain and sanitary sewer systems occurred.

The HPNS storm drain and sanitary sewer systems TCRAs performed throughout Parcels B, C, D-2, G, UC1, UC2, and UC3 support the accuracy of the CSM. Similar types of fill materials were found in the excavated trenches and no waste materials were discovered during excavation. Identified radiological contamination primarily has been found in excavated soil at HPNS. There has been little indication of historical spills or accidental releases based on the historical research performed and radiologic site investigations (DON 2008).

2.3 RELEASE CRITERIA, REMEDIATION GOALS, AND OBJECTIVE

Based on the radiological operational history described in the final HRA, Volume II (NAVSEA 2004), the DON determined that low-level radioactive contamination potentially present in some buildings, storm drain and sanitary sewer lines, soil, debris, and slag material at HPNS required a response action. This decision was documented in the final AM (DON 2006). The purpose of the AM was to document the DON's decision to perform TCRAs at areas throughout HPNS that could contain localized radioactive contamination and substantially eliminate identified exposure pathways to surrounding populations and nearby ecosystems.

Presented in Appendix A of the AM (DON 2006), the DON identified the applicable or relevant and appropriate requirements (ARARs) for the HPNS removal actions. Only those standards identified by the State of California in a timely manner that were more stringent than federal requirements became ARARs. The remediation goals for localized radioactive contamination at

HPNS presented in the AM are considered to be the most conservative available and were developed based on the ARARs.

The property associated with Crisp Road (Work Area 16) has been designated as Parcel UC3 by the DON. However, Parcel UC3 has not yet been established by the DON as a separate HPNS parcel. Once the HPNS Proposed Plan is approved and Parcel UC3 established, the results of the implemented TCRA activities documented in this Radiological RACR will support preparation of the ROD. Since no ROD has been prepared by the DON at this time for Parcel UC3, the HPNS radiological release criteria established in the AM (DON 2006) were used as the remediation goals during the TCRA activities. The AM release criteria are presented in this Radiological RACR as Table 2-1.

The radiological release criteria established in the AM (DON 2006) were based on the Nuclear Regulatory Commission (NRC) 25 millirems per year (mrem/y) dose or were otherwise risk-based. Volume II of the HRA (NAVSEA 2004) listed cesium-137 (Cs-137), radium-226 (Ra-226), and strontium-90 (Sr-90) as the radionuclides of concern (ROCs) for the HPNS storm drain and sanitary sewer systems.

The objective of the TCRA was to protect the public health and welfare, and the environment from actual or potential releases of radiologic contaminants, prevent exposure to residual ROCs in concentrations that exceed remediation goals for the ingestion or inhalation exposure pathways, achieve radiological release for unrestricted use of Parcel UC3, and support the preparation of the ROD. This objective was achieved by meeting the release criteria and remediation goals identified in the AM (DON 2006).

2.4 SUPPORTING DOCUMENTS SUMMARY

The following sections summarize the relevant supporting plans and other documents necessary to facilitate and complete the Parcel UC3 radiological removal action activities. No deviations to these plans were implemented during the TCRA. Each of these supporting documents is incorporated by reference into this Radiological RACR and is available for review through the Administrative Record.

2.4.1 Base-wide Radiological Work Plan

The general radiological work performed at HPNS and other work control procedures were conducted in accordance with the final "Base-wide Radiological Work Plan, Revision 1, Hunters Point Shipyard, San Francisco, California" (Radiological Work Plan) (TtEC 2007b). This document provides guidance for:

- Radiological training

- Various work control procedures
- Radiological survey types and classifications
- Survey planning and implementation
- Results assessment
- Release criteria and investigation levels
- Field and laboratory instruments
- Decontamination and remediation
- Radioactive materials management
- Quality assurance and control

The procedures and methodologies outlined in the Radiological Work Plan are applicable to the general radiologic work performed for Parcel UC3, as well as other HPNS-wide support functions.

2.4.2 Base-wide Storm Drain and Sanitary Sewer Removal Work Plan

The HPNS radiologic work activities were performed in accordance with the "Base-Wide Storm Drain and Sanitary Sewer Removal Work Plan, Hunters Point Shipyard, San Francisco, California" (TtEC 2006a) and its subsequent revisions (TtEC 2007a; 2008a and b; 2010b), collectively referred to as the Work Plan throughout this Radiological RACR. The Work Plan presents the overall scope and approach for storm drain and sanitary sewer systems removal and radiological survey and release of the excavated trench areas at HPNS.

The general approach to removing and radiologically surveying the storm drain and sanitary sewer lines described in the Work Plan (TtEC 2010b) was to:

- Excavate soil to a minimum depth of 1 foot below the pipe
- Remove the pipelines
- Plug open sewer or storm drain lines left in place during the removal process to prevent water from entering or exiting pipes
- Conduct ex-situ radiological screening and sampling
- Perform Final Status Survey (FSS) activities on excavated soil and exposed excavation trench surfaces

Following an evaluation of the results of these activities and the removal of any identified radiological contamination, the trench survey unit excavations were backfilled and the site restored.

The Work Plan (TtEC 2010b) specifies the work to be performed for the storm drain and sanitary sewer systems FSS activities. FSSs for every excavated pipeline trench section included a 100 percent surface scan and the collection of systematic and biased static measurements, as appropriate. Following excavation, systematic soil samples were collected after establishing a grid that did not exceed 1,000 m^2 over the exposed trench surface. A minimum of 18 systematic sample locations, based on a random start point and a triangular grid pattern, were generated using Visual Sample Plan (VSP) software. Sample collection points were placed in the field using approved land surveying technologies and identified with the Global Positioning System (GPS). The systematic samples were analyzed for radionuclides by gamma spectroscopy with 10 percent of the samples being analyzed for Sr-90. An additional 10 percent of the samples were sent to the off-site laboratory for quality assurance verification. The FSS results were used for dose and risk modeling and evaluation of the results to facilitate regulatory agency concurrence for unrestricted radiological release.

The Work Plan provides the procedures and methodologies for performing the HPNS-wide storm drain and sanitary sewer systems removal actions including:

- Radiological Control Plan
- FSSs
- Field Implementation
- Waste Management Plan
- Environmental Protection Plan
- Sampling and Analysis Plan (SAP)
- Project Quality Control Plan
- Stormwater Pollution Prevention Plan

In accordance with the Work Plan (TtEC 2010b), most storm drain and sanitary sewer piping within each parcel or site were to be removed, although some piping may be left in place to be addressed at a later date and limited piping may be left in place permanently. Specifically, piping laterals originating at non-radiologically impacted buildings would only be removed within the first 10 feet of their union with a main trunk line. If radiological contamination was not present in this segment of the line, the exposed ends of the lateral were capped or plugged and the remaining portions left in place. If evidence of radiological contamination was encountered, the remaining lateral was removed to the extent practicable. In addition, piping located within 10 feet of a building or other obstruction was left in place to protect the integrity of the structure and to ensure the health and safety of workers and tenants.

2.4.3 Basewide Archaeological Monitoring and Discovery Plan

The final "Basewide Archaeological Monitoring and Discovery Plan" (Archaeological Plan) (TtEC 2009a) was prepared to apply to those activities agreed to by the DON and the California State Historic Preservation Office that will occur at HPNS under the 1998 Base Realignment and Closure program. The Archaeological Plan provided a context for the cultural resources of HPNS and guidance for archaeological monitoring during removal and remedial actions. To comply with the substantive requirements of Section 106 of the National Historic Preservation Act for removal and remedial actions undertaken at HPNS, the DON directed the preparation of the plan and monitoring of the fieldwork by a qualified archaeologist, as required on a case-by-case basis. The document delineated those areas at HPNS that required monitoring during preconstruction activities or because of archaeological sensitivity. In addition, the document outlined procedures for identifying and treating resources discovered during invasive field activities and the treatment of human remains and grave-associated artifacts. The results of the archaeological monitoring activities performed for Parcel UC3 are described in Section 3.4 of this Radiological RACR.

2.4.4 Execution Plan

The final "Execution Plan, Crisp Road, Sanitary Sewer and Storm Drain Removal" (Execution Plan) (TtEC 2010a) was prepared and submitted to the DON on January 25, 2010. This document provided site-specific information not included in the Radiological Work Plan (TtEC 2007b) or the Work Plan (TtEC 2010b) for the storm drain and sanitary sewer removal actions including:

- Control measures for diverting traffic while maintaining access for site tenants and other DON contractors during construction
- Integration of surface drainage with the existing stormwater systems in Parcel E
- Dust control and air monitoring requirements specific to the Parcel UC3 work locations
- Location of culturally sensitive areas and archaeological monitoring requirements

In addition, two additional documents specific to Parcel UC3 were developed and presented as attachments to the Execution Plan. These documents included:

- Attachment 1 – Project Quality Control Plan
- Attachment 2 – Design Plan Work Areas 16 and 22

The Execution Plan was prepared in accordance with the requirements specified in the HPNS Radiological Work Plan (TtEC 2007b) and the Work Plan (TtEC 2010b).

ED_006787_00017608-00033

The general excavation approach outlined in the Execution Plan was to remove the overlying pavement, excavate the soil, remove the storm drain and sanitary sewer piping, and continue excavation to a minimum depth of 1 foot below the pipe. Open storm drain or sanitary sewer lines left in place during the removal process were to be plugged to prevent water from entering or exiting the pipes.

2.4.4.1 Design Plan

The Design Plan for Work Areas 16 and 22 was presented in Attachment 2 to the Execution Plan (TtEC 2010a). The Design Plan identified the storm drain and sanitary sewer systems pipelines and manholes to be removed during the TCRA and provided construction procedures to accomplish these work activities. In addition, the Design Plan provided specific procedures for the construction of RSY4.

The Design Plan identified the extent of the storm drain and sanitary sewer systems to be removed and provided information regarding pipe size, flow direction, material type, and length. The detailed design drawings were based on 1995 engineering drawings provided by the DON. Existing topographic data were obtained from the HPNS Base Map (44 sheets) dated November 1, 1993 (Gahagan and Brian 1993). Detailed design drawings, HPNS construction specifications (TtEC 2009b), and descriptions of the fieldwork procedures and methods applicable to the storm drain and sanitary sewer systems TCRA activities were provided in the Design Plan.

2.4.5 Survey Unit Project Reports

The radiological details of the storm drain and sanitary sewer systems removal work completed for Parcel UC3 were provided in the final versions of the individual Survey Unit Project Report (SUPR) prepared for each of the designated trench survey units. Each of the Parcel UC3 draft SUPRs previously was provided to the U.S. Environmental Protection Agency (EPA), the California Department of Toxic Substances Control (DTSC), and the Department of Public Health, Environmental Management Branch (CDPH), who submitted comments that were addressed in the final SUPRs. Approval of the final SUPRs will occur as part of the regulatory review and concurrence with this Radiological RACR.

The individual SUPRs prepared for each of the storm drain and sanitary sewer systems trench survey units associated with Parcel UC3 presented radiological details and summarized the scope, approach, and survey results from the removal action activities. The objective of each SUPR was to demonstrate that identified residual radioactivity levels inside the excavated trench (exposed sidewalls and bottom) and within the materials used as backfill met the release criteria. Fieldwork and construction activities were briefly summarized in each SUPR; however, detailed information related to the fieldwork performed was presented in this Radiological RACR. Each SUPR presented relevant discussions and pertinent information including:

- FSS activities performed for the trench survey unit and selected backfill materials
- Laboratory analytical results and comparison of on-site and off-site analytical results
- Dose modeling with input parameters applying the default residential farmer scenario of 12 hours per day indoors and 6 hours per day outdoors occupancy and using the larger of the method detection limit (MDL) or reported activity
- Dose and risk modeling results
- Derived concentration guidelines, levels, and modeling
- The as low as reasonably achievable (ALARA) process, including identification and review of potential radiological impacts as well as discussions related to qualitative and quantitative ALARA analyses
- Recommendation for final unrestricted radiological release

A copy of each final Parcel UC3 SUPR is provided in Appendix F (Work Area 16 West), Appendix G (Work Area 16 Central), and Appendix H (Work Area 16 East).

2.4.6 Final Survey Unit Project Reports Abstract

The "Final Survey Unit Project Reports Abstract, Revision 3, Sanitary Sewer and Storm Drain Removal Project, Hunters Point Shipyard, San Francisco, California" (SUPRA) (TtEC 2011) was prepared to document activities performed under the Execution Plan (TtEC 2010b) at HPNS. This SUPRA is applicable to the storm drain and sanitary sewer TCRA activities performed at HPNS prior to December 31, 2010. To reduce the level of detail that typically would be redundant to each SUPR, the SUPRA was developed as an overarching document that provides information and details common to each of the numerous trench survey units throughout HPNS. The SUPRA is revised as state-of-the-art laboratory methodologies and quality assurance procedures are refined. This document is applicable to all HPNS storm drain and sanitary sewer systems SUPRs and data sets prepared for regulatory review. The SUPRA referenced in this Radiological RACR is provided in Appendix A.

The SUPRA provides a history of the storm drain and sanitary sewer systems at HPNS and documentation of the site's operational history. The SUPRA also presents detailed discussions and common information related to storm drain and sanitary sewer systems removal actions at HPNS including:

- Release limits
- ALARA process
- ROCs and associated release criteria
- Investigation levels for gamma scan surveys

- FSS objectives, design, and methodology
- RSY processing of peripheral material, overburden, and excavated soil
- Import fill sources, screening, and analytical results
- Reference areas
- Sample collection methodologies and laboratory analyses including gamma spectroscopy analysis flags
- Off-site laboratory selection
- Quality assurance, quality control, and comparative laboratory sample results
- Sr-90 analysis
- Uncertainty analysis
- Data assessment (verification, validation, and evaluation)
- Statistical tests
- Dose and risk modeling
- Final unrestricted radiological release criteria

The release criteria for storm drain and sanitary sewer systems ROCs, as presented in the SUPRA, are reproduced as Table 2-2 in this Radiological RACR and include residual doses for both outdoor workers and residents.

2.4.7 U.S. Environmental Protection Agency Acceptance of On-Site Laboratory Results

The EPA is the lead regulatory agency for the TCRAs performed at HPNS. To expedite and focus remediation efforts, a state-of-the-art on-site laboratory for radiological analysis was established at HPNS under contract to TtEC. At a meeting regarding radiological cleanup of HPNS in October 2009, the CDPH requested that the EPA submit a letter explaining their reasons for accepting the DON's on-site laboratory results to verify the completion of the radiological soil removal actions.

On December 15, 2009, the EPA provided the CDPH with an explanation as to why the DON's methods provided sufficient data quality to allow risk-based determinations that the results of the removal activities were protective of human health and the environment. The EPA performed an inspection and documented that the procedures, conduct, and operational performance of the on-site laboratory were exemplary and that every reasonable step was being taken to show that the site-specific remediation goal was being met. A copy of the EPA letter to CDPH is provided in Appendix D.

ED_006787_00017608-00036

3.0 STORM DRAIN AND SANITARY SEWER REMOVAL OVERVIEW

This section provides an overview of the storm drain and sanitary sewer systems TCRA completed for Parcel UC3. The purpose of this removal action was to meet the remediation goals established in the AM (DON 2006) and achieve the unrestricted radiological release of the Parcel UC3 storm drain and sanitary sewer systems. The remediation goals were developed to protect public health and welfare, and the environment from actual or potential exposure by physically removing the existing storm drain and sanitary sewer lines and disposing of the associated radioactive contaminants that exceed the radiological remediation goals. Meeting these goals substantially eliminates the potential migration of contaminated material within or outside these systems at HPNS.

The Parcel UC3 TCRA was performed under TtEC's United States NRC Service Provider Radioactive Material License. In accordance with NCP requirements, the ARARs for this removal action were presented in the AM (DON 2006). The radiological release criteria for HPNS, as established in the AM, are provided in Table 2-1 and the release criteria specifically for the storm drain and sanitary sewer removal actions, as presented in the SUPRA (Appendix A), are provided in Table 2-2.

The Parcel UC3 storm drain and sanitary sewer systems TCRA was initiated on December 15, 2009 and continued through June 2011. During the Parcel UC3 removal action, total of 21 trench survey units were designated. For presentation in this Radiological RACR, Parcel UC3 was divided into Work Areas 16 West, Central, and East as follows:

- Work Area 16 West
  - Trench Survey Unit 166 (TU166)
  - Trench Survey Unit 172 (TU172)
  - Trench Survey Unit 173 (TU173)
  - Trench Survey Unit 177 (TU177)
  - Trench Survey Unit 178 (TU178)
  - Trench Survey Unit 179 (TU179)
  - Trench Survey Unit 180 (TU180)
  - Trench Survey Unit 181 (TU181)
- Work Area 16 Central
  - Trench Survey Unit 170 (TU170)
  - Trench Survey Unit 175 (TU175)

ED_006787_00017608-00037

- Trench Survey Unit 176 (TU176)
- Trench Survey Unit 182 (TU182)
- Trench Survey Unit 183 (TU183)

- Work Area 16 East
  - Trench Survey Unit 169 (TU169)
  - Trench Survey Unit 174 (TU174)
  - Trench Survey Unit 184 (TU184)
  - Trench Survey Unit 185 (TU185)
  - Trench Survey Unit 187 (TU187)
  - Trench Survey Unit 188 (TU188)
  - Trench Survey Unit 189 (TU189)
  - Trench Survey Unit 190 (TU190)

Detailed discussions for each of the Parcel UC3 trench survey units are provided in Sections 4.0 (Work Area 16 West) through 6.0 (Work Area 16 East) of this Radiological RACR. The individual storm drain and sanitary sewer lines are depicted on Figure 3-1 and each trench survey unit is identified on Figure 3-2. Table 3-1 summarizes the activities performed for each trench survey unit along with the associated Work Area 16 designations, associated trench segment identification numbers, size, and pertinent data related to samples collected, contamination identified, remediation performed, and dose modeling results. The SUPRs for each of the 21 Parcel UC3 trench survey units are provided in Appendix F (Work Area 16 West), Appendix G (Work Area 16 Central), and Appendix H (Work Area 16 East).

3.1 PRE-EXCAVATION FIELD ACTIVITIES

Pre-excavation field activities for the Parcel UC3 removal action were initiated on December 15, 2009. Construction of RSY4 for radiologically processing excavated soil was initiated on March 11, 2010. Temporary fencing was installed or reconfigured around the work areas to incorporate Parcel UC3 into radiological control areas associated with the RSYs. Parcel UC1 was blocked and the HPNS gate at the west end of Crisp Road was closed. Traffic was rerouted through Parcels UC1 and UC2 in accordance with the approved traffic plan prior to beginning asphalt removal.

Railroad track was removed from within Parcel UC3 prior to initiating the storm drain and sanitary sewer systems excavation activities. Because the railroad track was removed from non-radiologically impacted areas, no surveys were required and the materials were staged for recycling during the pre-excavation activities. Alternate traffic routes were constructed in Parcel

UC3 for tenants along Palou Avenue during the pre-excavation activities. The overlying asphalt pavement along Crisp Road was removed prior to beginning excavation of the storm drain and sanitary sewer systems lines.

TtEC anticipated the potential presence of serpentinite rock in the Parcel UC3 subsurface soil formations. Additional dust mitigation measures were installed to reduce potential asbestos exposure to workers and the community prior to the excavation activities. These mitigation measures included continuous spraying by water trucks to minimize fugitive dust, applying fabric to temporary fences to reduce windblown particulates, and applying a surfactant to open trench surfaces.

Wind socks were installed to determine the prevailing wind direction and ensure proper placement of the radiological air monitoring equipment on a daily basis. Other air monitors were installed upwind and downwind of the excavation activities to measure airborne asbestos, particulates, lead, and magnesium. The air monitoring results were uploaded to the DON's website so that the information could be available to the general public at: http://www.bracpmo.navy.mil/basepage.aspx?baseid=45&state=&name=HPS. No radiological exceedances were identified during the Parcel UC3 field activities.

3.1.1 Crisp Road Utility Relocation

In May 2010, the DON directed TtEC to develop a plan for managing and relocating utilities along Crisp Road during the storm drain and sanitary sewer systems TCRA activities. This utility plan outlined the following:

- Tenant utility requirements
- Utility locations in relation to storm drain and sanitary sewer lines to be excavated during the Parcel UC3 TCRA
- The relocation of these utilities to minimize the potential adverse effects to current HPNS tenants and other users

As a major transportation thoroughfare that provides access to tenant and DON operations at HPNS, several utilities are associated with Parcel UC3. In several instances, tenants installed or modified utilities associated with their leaseholds that were affected by the storm drain and sanitary sewer systems TCRA along Crisp Road. The utilities affected included:

- Water
- Natural gas
- Fiber optic communication lines
- Sanitary sewer pipelines

- Stormwater drain lines
- Electrical power

Numerous meetings related to the Parcel UC3 storm drain and sanitary sewer systems removal action activities were conducted with the affected tenants and utility companies. These meetings resulted in a number of preliminary agreements related to utility modifications, access changes, relocation of utilities, and the excavation activities. The storm drain and sanitary sewer systems removal action required excavations up to 18-feet-deep parallel to the existing utilities.

The scheduling of construction activities was critical to ensure that utility relocation/service transfer occurred with minimal interruption in service during the Parcel UC3 storm drain and sanitary sewer systems TCRA activities. Work was scheduled so that new utility services were installed prior to the disconnection of existing services. Utility relocations consisted of the following activities:

- Removal of railroad track and crossties along Crisp Road
- Protection of Building 606 sanitary sewer force main
- Installation of utility poles
- Installation of lines for electric and telephone/communication services
- Installation of Buildings 606 and 815 water lines, including disconnection of existing service
- Natural gas services including installation at Building 830 and termination at Building 815
- Construction of access roads for Buildings 830/831 and 815
- Disconnection of the Building 815 sewer line, installation of portable restrooms, and reconnection to the sewer line following completion of the TCRA activities

The DON directed TtEC to prepare the final "Parcel UC3, Crisp Road, Utilities Completion Report" (Utilities Report) as the final as-built record of utilities along Crisp Road. This report included:

- A summary of the utility relocation activities
- Actual design and as-built drawings for the relocated utilities
- As-built and design specification for tenant access roads

A copy of the Utilities Report for Parcel UC3 is provided in Appendix K.

3.2 PARCEL UC3 REMOVAL ACTION ACTIVITIES

Excavation of the Parcel UC3 storm drain and sanitary sewer systems was initiated on March 5, 2010 in TU166 and the last truckload of soil was excavated from TU188 on October 4, 2010. In total, 16,378 linear feet of trench (inclusive of soil, pipes, and manholes) identified in the Execution Plan (TtEC 2010a) was excavated during the TCRA activities. Although not identified in the Execution Plan, an additional 1,985 linear feet of storm drain and sanitary sewer systems piping was discovered during the excavation activities and removed. These previously unidentified pipelines were assigned trench segment identification numbers and incorporated into appropriate trench survey units for the radiological survey activities.

There were 118 storm drain line segments and 52 sanitary sewer line segments associated with Parcel UC3 (Figure 3-1). Storm drain pipe excavated from Parcel UC3 consisted of 4-inch-diameter to 24-inch-diameter CIP, steel, concrete, and VCP located at depths ranging from 2 feet to 13 feet below ground surface (bgs). The sanitary sewer pipe excavated from Parcel UC3 was composed of 4-inch-diameter to 33-inch-diameter CIP, DIP, concrete, and VCP located at depths ranging from 2 feet to 17 feet bgs. Table 3-2 identifies each trench survey unit, trench segment, type of trench segment (storm or sanitary), pipe material and diameter, and minimum and maximum pipe depths.

A total of 21 trench survey units were designated during the Parcel UC3 TCRA activities. The maximum depths of the excavated trenches ranged between 2 feet and 18 feet bgs (Table 3-2). At the completion of excavation, the total area of the exposed trench surfaces in Parcel UC3 was 16,068 m^2 with 9,212 linear feet of trench (Table 3-1).

3.2.1 Soil Excavation

In accordance with the Execution Plan (TtEC 2010a), the soils overlying the storm drain and sanitary sewer pipes and approximately 1 foot of soil surrounding each pipe and manhole were excavated and transferred to either RSY2, RSY3, or RSY4 for radiological processing. The activities performed during radiological processing of the excavated soil are described in Section 3.2.2. The excavated soil often included small sections of crumbled pipe and crushed manhole pieces that were processed along with the soil. In total, 1,502 truckloads (approximately 18,024 cubic yards) of soil excavated during removal of the storm drain and sanitary sewer systems in Parcel UC3 were transferred to the RSYs for radiological processing. Table 3-3 summarizes each truckload of excavated soil generated during the storm drain and sanitary sewer systems removal action activities, indicates the associated screening pad, and identifies the unique excavated soil survey unit or "ES" number assigned to the soil placed on the screening pad for tracking radiological processing activities.

3.2.2 Excavated Soil Radiological Processing

Soil derived from the excavation of the Parcel UC3 storm drain and sanitary sewer systems was transported to RSY2, RSY3, or RSY4 and placed on designated screening pads for radiological processing. A total of 66 screening pads containing soil derived from the Parcel UC3 excavation activities were processed in the RSYs during the removal action. Once a screening pad reached capacity, the excavated material was spread on screening pads in lifts that did not exceed a thickness of 6 inches or 1,000 m^2 in area. The excavated soil on the screening pads was allowed to dewater prior to initiating radiological processing. Table 3-4 summarizes the excavated soil associated with Parcel UC3 processed in each of the RSYs and includes the unique excavated soil survey unit number (also referred to as the ES survey unit number), assigned RSY screening pad, associated IR Program site (if present), date on which the final gamma scan was performed, number of soil samples collected, identified ROC and analytical results when contamination was present, the estimated volume of soil remediated (if any), and final disposition of the excavated soil survey unit.

Radiological surface surveys were conducted, which consisted of a high-density gamma scan performed with the use of gamma scintillation detectors and supported by GPS equipment. A discussion of the various towed array systems used for scanning was provided in the Work Plan (TtEC 2010b) and the SUPRA (Appendix A). This survey process resulted in a 100 percent surface scan. Radioactive materials identified during the screening activities were collected, segregated, and stored in appropriate containers for subsequent disposal by the DON radiological waste contractor. Gamma scan data for each excavated soil stockpile used as backfill material are presented in the individual SUPRs included in Appendices F through H.

Areas of soil placed on the screening pads that showed the potential presence of radiation levels greater than the established investigation limits were further evaluated, and investigative soil samples were collected, as appropriate. Sample collection locations were based on a random start point using the most current version of VSP software. A minimum of 18 systematic soil samples were collected from each excavated soil survey unit placed on a screening pad and analyzed by the laboratory using gamma spectroscopy. Soil in the vicinity of any sample analytical result exceeding a radionuclide-specific release criterion was remediated. The release criteria for the storm drain and sanitary sewer TCRAs are provided in Table 2-2 and identified in the SUPRA (Appendix A).

Remediation was performed iteratively for the excavated soil survey unit materials on the screening pads until the soil samples analyzed after each remediation event showed results less than the radionuclide-specific release criterion. Following the collection and analysis of the final 18 FSS soil samples and with the concurrence of the RASO, each excavated soil survey unit was removed from the screening pad and stockpiled outside of the RSYs pending receipt of the Sr-90 analytical results. Once the laboratory analytical results were evaluated against the release

criteria (Table 2-2), a data package was prepared for the RASO's review. The RASO then concurred with whether or not the excavated soil survey unit was acceptable for use as backfill material. Only those excavated soil survey units that received concurrence from the RASO and were not chemically contaminated based on IR Program site analytical results were used as backfill material in the Parcel UC3 trench survey units.

In total, 2,837 soil samples were collected from the Parcel UC3 excavated soil survey units processed in the RSYs during the removal action activities. These soil samples were analyzed by gamma spectroscopy in the on-site laboratory with 10 percent sent to the off-site laboratory for Sr-90 analysis, and 10 percent sent off-site for quality assurance verification. Approximately 789 cubic yards of soil that exceeded the radiological release criteria was remediated from the excavated soil survey units processed in the RSYs. The remediated soil was placed in low-level radioactive waste (LLRW) bins for disposal by the DON radiological waste contractor. Radionuclide concentrations greater than the release criteria were limited to Ra-226 ranging from 1.4851 picocuries per gram (pCi/g) to 3.2976 pCi/g and Cs-137 ranging from 0.11349 pCi/g to 0.16916 pCi/g. No concentrations above the release criterion were identified for Sr-90 in the excavated soil survey units processed in the RSYs. None of the final 18 systematic FSS soil sample analytical results identified the presence of residual radioactivity above the release criteria in the excavated soil survey units for any ROC. The laboratory analytical results for the excavated soil survey units used as backfill material in the Parcel UC trench survey units were presented in the individual SUPRs provided in Appendix F (Work Area 16 West), Appendix G (Work Area 16 Central), and Appendix H (Work Area 16 East).

The majority of the Parcel UC3 radiologically surveyed and released soil processed in the RSYs was backfilled into appropriate trenches with the concurrence of the RASO. A total of five radiologically processed excavated soil survey units derived from IR Program Sites IR-04 and IR-56 soils that exceeded HPNS chemical release limits were disposed of off-site by the DON non-LLRW waste contractor with the concurrence of the RASO (Table 3-4). In addition, five ES survey units that were not derived from IR Program site soils were not acceptable for use as backfill material due to staining, odor, or as directed by the RASO. The chemically contaminated soils were staged pending off-site disposal and were subsequently transferred off-site by the DON non-LLRW contractor. The IR Program site chemical analytical results and identification of the elevated chemicals of concern are presented in Appendix E. Table 3-4 lists each of the processed excavated soil survey units that incorporate soil excavated from the Parcel UC3 storm drain and sanitary sewer systems as well as pertinent information related to radiological screening, contamination identified, soil remediated for disposal as LLRW, and final disposition of the soil.

3.2.3 Pipe and Manhole Survey Activities

While much of the piping excavated from Parcel UC3 disintegrated upon removal and was transferred along with the surrounding excavated soil for processing in the RSYs, a total of 260 pipe sections and 48 manholes were staged on plastic pending further activities. Radiological survey activities were performed during the Parcel UC3 TCRA for a total of 251 sections of pipe. The radiological surveys consisted of a 100 percent surface scan on each pipe section. In addition, two static measurements were recorded, and two swipe samples were collected and submitted to the on-site laboratory for analysis. The collected data were reviewed by the Radiation Safety Officer (RSO) to determine whether investigative levels had been exceeded. Because no elevated results were identified, each of the Parcel UC3 pipe sections surveyed was radiologically released for off-site disposal by the DON non-LLRW contractor or recycled. Table 3-5 identifies each pipe section surveyed during the Parcel UC3 removal action and indicates final disposition. The radiological survey results are provided in Appendix B.

At the direction of the DON, no radiological surveys were performed on manholes excavated from Parcel UC3 due to the limited quantity removed and to expedite completion of the main HPNS traffic thoroughfare. Consequently, no manhole survey results are associated with the Parcel UC3 piping. The concrete and brick forming the walls of 41 manholes were crushed and the debris placed in LLRW bins for disposal by the DON radiological waste contractor. Table 3-5 identifies each piping component excavated from Parcel UC3 that did not contain sediment and final disposition of the piping. The Parcel UC3 manhole debris was shipped off-site to either the U.S. Ecology facility in Idaho or the Energy Solutions facility in Clive, Utah by the DON radiological waste contractor.

3.2.4 Pipe and Manhole Sediments

A sufficient volume of sediment was collected from nine sections of pipe and seven manholes during the Parcel UC3 removal action. A total of 17 sediment samples were collected and submitted to the laboratory for analysis by gamma spectroscopy. The collected data were reviewed by the RSO to determine whether the release criteria had been exceeded. The analytical results identified the presence of Cs-137 contamination in four sections of pipe and two manholes. The highest Cs-137 sediment concentrations were identified at 0.22526 pCi/g in a pipe section excavated from trench segment 03-E16-00-1D and 0.33662 pCi/g in Manhole MH543. No Ra-226 or Sr-90 contamination was identified in any of the sediment samples analyzed. Pipes and manholes associated with sediment sample analytical results that exceeded the Cs-137 release criterion were placed in LLRW bins for off-site disposal by the DON radiological waste contractor. At the direction of the DON, the remaining five pipe sections and five manholes that did not contain contaminated sediments were also placed in LLRW bins to expedite the completion of the main traffic thoroughfare through HPNS. Table 3-6 summarizes the sediment sample analytical results and final disposition of the associated piping.

3.2.5 Piping Remaining In Place

The majority of the storm drain and sanitary sewer systems pipe sections and manholes were excavated during the Parcel UC3 TCRA activities. Small sections of piping were left in place following the completion of the removal action activities due to obstructions such as retaining walls and active utility lines or to avoid adversely affecting the structural integrity of buildings. Radiological surveys were performed on a number of the pipes remaining in place. The RSO did not identify the presence of elevated results in any of the pipes surveyed. The radiological survey results for the piping left in place are provided in Appendix B. Table 3-7 identifies the piping remaining in place on Parcel UC3 following the completion of the removal action and includes the associated trench survey units, trench segment or component, component type, and linear feet of pipe removed and remaining in place. Further details related to the piping left in place are provided in Sections 4.3.2, 4.4.2, 4.5.2, 4.6.2, and 6.2.2 of this Radiological RACR.

3.2.6 Trench Sampling and Remediation Activities

Numerous soil samples were collected from the exposed sidewalls and bottoms of the 21 excavated trench survey units to determine whether radionuclide contamination was present above the release criteria. Systematic soil sample locations were identified for each iterative round of sample collection using VSP software with a random start point on a triangular grid pattern. A minimum of 18 soil samples were collected from each trench survey unit and submitted under chain-of-custody to the laboratory for analysis by gamma spectroscopy. In addition, investigative samples were collected and analyzed, as directed by the RSO, based on the results of trench radiological surface scans and/or piping sediment sample analytical results. The collected soil samples were submitted to the laboratory for analysis by gamma spectroscopy with 10 percent sent to the off-site laboratory for Sr-90 analysis and 10 percent for quality assurance verification. Throughout this Radiological RACR, the term "laboratory" refers collectively to both the on-site and off-site laboratories and their respective functions unless otherwise specified.

During the Parcel UC3 TCRA, a total of 514 soil samples were collected from exposed surfaces of the 21 designated trench survey units and analyzed by the laboratory. Of these soil samples, a total of 136 were investigative and 378 were final systematic FSS soil samples. Throughout this Radiological RACR, "investigative" trench survey unit soil samples refers to any systematic, investigative, or verification soil sample that was not one of the final 18 FSS soil samples As indicated in Table 3-1, the highest Cs-137 and Ra-226 investigative soil sample analytical results were identified in TU169 at 0.17749 pCi/g and 4.1008 pCi/g, respectively.

Approximately 1,090 cubic yards of soil was remediated from the Parcel UC3 trench survey units and either placed in LLRW bins for off-site disposal or transferred to the RSYs for radiological processing to reduce the overall volume of LLRW generated at HPNS. The LLRW

bins were transported off-site by the DON radiological waste contractor to either the U.S. Ecology facility in Idaho or the Energy Solutions facility in Clive, Utah. Contaminant concentrations in trench survey unit soils ranged between 0.12702 and 0.17749 pCi/g for Cs-137 and between 1.5023 and 4.1008 pCi/g for Ra-226. The majority of the contaminated soil was remediated from TU169 located in Work Area 16 West. Table 3-8 lists each Parcel UC3 trench survey unit, the dates remediation was performed, estimated volume of soil remediated, and the LLRW bin or bins in which the contaminated material was placed.

3.2.7 Trench Final Status Survey Activities

The objective of the storm drain and sanitary sewer FSS activities was to demonstrate that identified residual radioactivity levels inside the excavated trench and within the materials used as backfill met the release criteria. The Execution Plan (TtEC 2010a) and the Work Plan (TtEC 2010b) specify the work to be performed for the storm drain and sanitary sewer FSS activities. The "Multi-Agency Radiation Survey and Site Investigation Manual" (MARSSIM) (DoD et al. 2000), the "Nonparametric Statistical Methodology for the Design and Analysis of the Final Status Decommissioning Survey Guide" (Survey Guide) (NUREG-1505; NRC 1998), and the "Minimum Detectable Concentrations with Typical Radiation Survey Instruments for Various Contaminants and Field Conditions Guide" (Field Conditions Guide) (NRC 1997) were used as guidance in designing the FSSs. In general, FSSs for every excavated trench survey unit included a 100 percent surface scan and systematic and biased static or direct measurements. Direct surface radiation measurements were collected at each systematic sample location prior to the collection of the soil sample to identify the potential presence of gross contamination.

Systematic soil samples were collected from the exposed sidewalls and bottom of each excavated trench survey unit after establishing a grid that did not exceed 1,000 m^2 over the trench surface. A minimum of 18 systematic and discrete soil samples were collected from each trench survey unit and submitted to the laboratory for analysis by gamma spectroscopy. In addition, 10 percent of the samples were analyzed for Sr-90 and an additional 10 percent of the samples were submitted to the off-site laboratory for quality assurance verification.

During the Parcel UC3 TCRA, a total of 378 FSS trench survey unit soil samples were collected and analyzed by the laboratory. The collected data were reviewed by the RSO to determine whether investigative levels had been exceeded. None of the 378 final FSS soil samples indicated the presence of residual radioactivity above the release criteria for any ROC. The laboratory analytical results for the trench survey unit FSS soil samples were presented in each of the 21 SUPRs provided in Appendix F (Work Area 16 West), Appendix G (Work Area 16 Central), and Appendix H (Work Area 16 East). The FSS results were used for dose and risk modeling to facilitate regulatory agency concurrence for unrestricted radiological release. Table 3-1 summarizes the Parcel UC3 trench survey unit FSS activities including the results of the dose and risk modeling efforts.

3.2.8 Dose and Risk Modeling

Survey units for FSS activities consisted of two different types: 1) trenches and 2) backfill material. Dose and risk modeling was performed for each of the 21 trench survey units using the default residential farmer scenario of 12 hours per day indoors and 6 hours per day outdoors occupancy provided in the most current version of RESRAD at the time of the modeling exercise. The backfill material and the trenches were modeled separately with input parameters using the larger of the MDL or reported activity concentrations. Radionuclide-specific release criteria were obtained from the AM (DON 2006) and were then modeled using RESRAD Version 6.4, based on the 25 mrem/y total effective dose equivalent or were otherwise risk-based; the final doses using the risk-based release criterion for HPNS were all less than this 25 mrem/y release criterion.

The results of the modeling efforts for each of the 21 designated trench survey units in Parcel UC3 fall within the acceptable NCP risk management range of 10^{-6} to 10^{-4}, which supports radiological free release. Dose and risk modeling was performed for each of the 21 trench survey units using the larger of the MDL or reported activity concentrations. Based on the dose and risk modeling results, the highest net dose to workers or members of the public as a result of exposures to residual radioactive material in soil on Parcel UC3 was identified in TU182 at 6.088 mrem/y with an excess lifetime cancer risk of 9.672×10^{-5}. Modeling is summarized separately for each Parcel UC3 trench survey unit in this Radiological RACR and a complete discussion of the dose and risk modeling results was presented in each SUPR provided in Appendices F (Work Area 16 West) through H (Work Area 16 East). Table 2-2 presents the storm drain and sanitary sewer removal action release criteria for each ROC including the residual doses for both outdoor workers and residents. A summary of the dose and risk modeling results for each trench survey unit is provided in Table 3-1.

3.2.9 As Low As Reasonably Achievable Process

As described in the SUPRA (Appendix A), the environmental ALARA process was implemented for each of the 21 trench survey units in addition to the dose and risk modeling efforts. The ALARA process was discussed in the individual SUPRs provided in Appendices F through H. ALARA analyses were performed based on recent estimates of dose to the public from HPNS operations. Based on qualitative ALARA analyses, excavation projects that could cause the potential dose to the public to exceed 1 millirem (individual) or 10 person-rem (collective) are subjected to quantitative ALARA analyses. To date, no operations at HPNS have resulted in an individual dose to the public greater than 1 mrem or a collective dose greater than 10 person-rem. Qualitative ALARA analyses did not result in any gamma measurements above the investigation levels, and none of the FSS sample results identified activity above the release criteria for any ROC. In addition, air sampling results did not exceed 10 percent of the derived air concentration and the processed personnel dosimetry badges did not identify a gamma dose

above background levels. A complete discussion of the ALARA process for each Parcel UC3 trench survey unit was provided in each SUPR (Appendices F through H).

3.3 IMPORTED FILL

The Parcel UC3 storm drain and sanitary sewer systems removal action necessitated the importation of appropriate soil for use as backfill material:

- When an insufficient volume of radiologically released excavated soil survey units that had been processed in the RSYs was available for these activities
- To account for the void created by removing the storm drain and sanitary sewer systems piping
- To replace the soil volumes removed during remediation activities
- To provide appropriate materials for proper compaction and roadway stability

The DON developed the "Hunters Point Shipyard Project Backfill Review and Acceptance Procedure HPO-Tt-0270" (HPNS HPO-Tt-0270) (TtEC 2006b) to describe the procedural requirements necessary to ensure that imported fill materials were adequately reviewed and accepted prior to being brought to HPNS. In addition, soil being screened for potential backfill material was sampled in accordance with specific instructions identified in the SAP, Appendix A of the Execution Plan (TtEC 2010a). Potential imported fill that did not meet the review and acceptance criteria was not transported to HPNS. The laboratory analytical results and data evaluation for the imported fill used as backfill material in Parcel UC3 are provided in Appendix M.

Imported fill was used as backfill material in the majority of the trench survey units as a supplement to the radiologically processed and free released excavated soil or as acceptable material for proper compaction to support roadway stability. A complete discussion of the imported fill material was provided in the SUPRA (Appendix A) including soil radiological analytical test results and acceptance criteria. The imported material used as backfill in Parcel UC3 was identified as "Mills Peninsula Hospital" soil in the SUPRA. Table 3-1 identifies the specific backfill material used in each Parcel UC3 trench survey unit including imported fill and radiologically surveyed and released excavated soil survey units.

3.4 ARCHAEOLOGICAL MONITORING

Archaeological monitoring for the Parcel UC3 storm drain and sanitary sewer systems TCRA was performed in accordance with the final Archaeological Plan (TtEC 2009a). Monitoring activities were conducted along Crisp Road in August 2010 by qualified archaeologists and archaeological technicians. Although previous research performed at HPNS in 1998 did not identify the presence of archaeological resources, four zones with the potential for subsurface

archaeological deposits were delineated at HPNS based on archival research. Only Zone 1 shellmound sites and Zone 2 historic buildings were identified as potentially located within the Parcel UC3 property boundary.

The designated archaeological monitor inspected ground surfaces within the archaeologically sensitive areas following the removal of the paved surfaces and during excavation activities. Soil exposures were inspected for signs of cultural materials, previous disturbance, fill, and bedrock and native soil exposures. Following excavation, soils were transported to screening pads in the RSYs and spread in lifts. The archaeological technicians surveyed these pads weekly to identify any cultural materials that may have been missed during the excavation process.

Daily cultural resource monitoring data sheets were filed with and reviewed by the Lead Archaeologist. Completed forms and the site visit log were included in Appendix B to the final Archaeological Monitoring Summary Report. These sheets included the location of the work monitored, the type of equipment used, site inspection observations, information on general soil morphology, and hours on-site.

No cultural materials were observed during the monitoring activities and no cultural resources were encountered or disturbed during construction. Because no new resources were identified, no assessment or treatment actions were required. The Archaeological Monitoring Summary Report is provided in Appendix L.

3.5 INSTALLATION RESTORATION PROGRAM SITES

Chemical contamination at HPNS is addressed through the IR Program process and is consistent with CERCLA as amended by SARA, and the NCP, to the extent practicable. Pursuant to Executive Order 12580, the DON is the lead agency responsible for implementation of the IR Program. The EPA, DTSC, Regional Water Quality Control Board, RASO, and the United States Fish and Wildlife Service (for sensitive species) provide regulatory oversight and guidance for CERCLA removal actions associated with the Parcel UC3 storm drain and sanitary sewer systems TCRA.

There are a total of three IR Program sites associated with the Parcel UC3 storm drain and sanitary sewer systems. The boundaries of these IR Program sites are identified on Figures 3-1 and 3-2. The individual Parcel UC3 IR Program sites and associated chemicals of concern are listed in Table 3-9. Throughout the excavation process, soils and piping were visually inspected for staining or odors regardless of whether removal occurred in an IR Program site. Materials that emitted odors or were stained as well as materials excavated from IR Program sites were segregated in the RSYs for further sampling and analysis to determine suitability for use as backfill material or waste characterization for disposal in accordance with HPNS HPO-Tt-0270 (TtEC 2006b) and the Execution Plan and SAP (TtEC 2010a). No sample collection activities or

laboratory analyses were performed during the Parcel UC3 removal action to meet any chemical remediation goals.

Samples of excavated soil derived from IR Program sites were collected and sent to the off-site laboratory for chemical analysis to verify whether the excavated material met the HPNS HPO-Tt-0270 (TtEC 2006b) acceptance/reuse criteria in accordance with the approved Execution Plan and SAP (TtEC 2010a). The Project Chemist compared the chemical analytical results with the applicable release criteria. Based on the analytical results, soils that did not meet the appropriate criteria were stockpiled for collection and off-site disposal by the DON non-LLRW contractor, along with non-IR Program soil that exhibited odor or staining. As indicated in Table 3-4, a number of excavated soil survey units processed in the RSYs were radiologically released, but were disposed of off-site by the DON non-LLRW contractor along with non-IR Program site soil that exhibited odor or staining. The chemical laboratory analytical results for each IR Program site associated with the excavation of the Parcel UC3 storm drain and sanitary sewer systems, the results of the data comparison with the appropriate release criteria, and the identification of the elevated chemicals of concern are provided in Appendix E.

ED_006787_00017608-00050

4.0 WORK AREA 16 WEST

Work Area 16 West is located at the west end of Parcel UC3 along Crisp Road (Figures 1-2, 3-2, and 4-1). This area is bounded on the north by the SFRA property (formerly Parcel A), on the east by Work Area 16 Central, on the south by private property located within the City of San Francisco, and on the west by the entrance gate to HPNS and Palou Avenue. The radiological work activities performed in Work Area 16 West included TU166, TU172, TU173, and TU177 through TU181. The following sections summarize the work activities completed in Work Area 16 West to support the recommended radiological release for unrestricted use of the Parcel UC3 property.

4.1 TRENCH SURVEY UNIT 166

TU166 is composed of six physically separate trench segments located in Work Areas 16 West, Central, and East (Figures 4-1, 5-1, and 6-1). The small trench sections that compose TU166 extend southward from Crisp Road within the Parcel UC3 property boundary (Figure 3-2). Although physically situated on the south sides of Work Areas 16 West, Central, and East, TU166 is included with Work Area 16 West for presentation in this Radiological RACR. TU166 connects to TU170, TU178, TU183, and TU187 on the north and terminates on the south at the Parcel UC3 property boundary. Small sections of TU166 are situated within IR Program Site IR-56. The chemicals of concern associated with IR-56 are listed in Table 3-9.

TU166 consists of nine storm drain trench segments and two sanitary sewer trench segments. As identified on Figures 4-1, 5-1, and 6-1, these trench segments include:

Storm Drain Trench Segments

- 03-E16-00-1D
- 03-E16-00-2P
- 03-E16-00-2T
- 03-E16-00-3J
- 03-E16-00-8A
- 03-E16-56-2P
- 03-E16-56-2T
- 03-E16-56-3J
- 03-E16-56-8A

Sanitary Sewer Trench Segments

- 03-E16-00-1B
- 03-E16-00-2E

Trench segments 03-E16-00-2E and -2P transitioned into TU170 on the north and trench segments 03-E16-00-1B and -1D continued into TU178 on the north. Trench segment 06-E16-00-2T continued into TU183 on the north and trench segments 03-E16-00-3J and -8A transitioned into TU187 on the north. With the exception of 03-E16-00-8A and 03-E16-56-8A, each of the trench segments associated with TU166 was identified in the Design Plan presented in Attachment 2 to the Execution Plan (TtEC 2010a). Trench segments 03-E16-00-8A and 03-E16-56-8A were discovered during excavation of trench segment 03-E16-00-3J.

4.1.1 TU166 Removal Action Activities

Excavation of TU166 was initiated on March 25, 2010 in trench segment 03-E16-56-2T. A total of 19 truckloads (approximately 228 cubic yards) of soil were excavated from TU166 during the TCRA activities (Table 3-3). Soil excavated from TU166 was radiologically processed in RSY2 (Table 3-4). Following the completion of excavation on August 17, 2010, TU166 exhibited an exposed surface area of 255 m^2 and was 134 linear feet in length (Table 3-1). The maximum excavated TU166 depth ranged between 5 feet and 11 feet bgs (Table 3-2).

During the Parcel UC3 TCRA, three sections of pipe were excavated from TU166 and placed on plastic pending further activities. The majority of the TU166 pipes disintegrated upon removal and the debris was transferred along with the surrounding excavated soil to RSY2 for processing. As indicated in Table 3-2, the sanitary sewer pipe excavated from trench segment 03-E16-00-1B was 6-inch-diameter VCP and the storm drain pipe removed from trench segments 03-E16-00-2T and 03-E16-56-2T was 8-inch-diameter VCP. The pipe removed from sanitary sewer trench segment 03-E16-00-2E was 8-inch-diameter CIP. The remainder of the trench segments associated with TU166 contained 8-inch-diameter to 18-inch-diameter concrete pipe. The TU166 pipes were found at depths ranging from 3 feet to 9 feet bgs.

A sufficient volume of sediment was available for sample collection and analysis in three pipe sections excavated from TU166 (Table 3-6). No radioactivity above the release criteria was identified in the sediment sample collected from pipe removed from trench segment 03-E16-00-2E (sample 03-PEMH515-015-01) for any ROC. However, Cs-137 contamination was identified in one sediment sample collected from a pipe excavated from trench segment 03-E16-00-1D (03-PEPI-0014-01) and one sediment sample collected from a pipe section removed from trench segment 03-E16-56-3J (03-PEPI-0015-01) at 0.22526 pCi/g and 0.23351 pCi/g, respectively. Both of the pipe sections containing contaminated sediments were placed in LLRW bins GFLU001279G11 for off-site disposal by the DON radiological waste contractor. The sediment sample laboratory analytical results are provided in Appendix C.

Radiological survey activities were not performed on the pipe section excavated from trench segment 03-E16-00-2E or any other pipes excavated from TU166. At the direction of the DON, this pipe section was placed in LLRW bin GFLU001279G11 on April 9, 2010 to expedite

completion of the main traffic corridor through HPNS. The final disposition of piping excavated from TU166 is identified in Table 3-6.

Due to the presence of Cs-137 contamination in two pipe sediment samples, six investigative soil samples were collected from TU166 and submitted to the laboratory for analysis. The analytical results for the six investigative samples did not identify the presence of radioactivity above the release criteria for any ROC. The laboratory reports were presented in Attachment 2 to the TU166 SUPR provided in Appendix F.

4.1.2 TU166 Piping Remaining in Place

No known storm drain or sanitary sewer piping associated with TU166 remained in place on Parcel UC3 following completion of the TCRA activities.

4.1.3 TU166 FSS Summary

The final 18 systematic FSS soil samples were collected from the exposed sidewalls and bottom of excavated TU166 and submitted to the laboratory for analysis by gamma spectroscopy on April 26, 2010. No radioactivity above the release criteria specified in the AM (DON 2006) was identified in the FSS soil samples for any ROC. The release criteria are identified in Tables 2-1 and 2-2. Figures 4-1, 5-1, and 6-1 depict the FSS sample collection locations in TU166. The laboratory analytical reports were presented in Attachment 2 to the TU166 SUPR provided in Appendix F.

TU166 was defined for the FSS as the sum of the trench unit and the backfill material composed of a volume of imported fill. The average net residual radioactivity concentrations for material used as backfill in Survey Unit 166 were 0.053 pCi/g for Cs-137, 0.070 pCi/g for Sr-90, and 0.373 pCi/g for Ra-226. The trench unit average net residual radioactivity concentrations were 0.057 pCi/g for Cs-137, 0.170 pCi/g for Sr-90, and 0.260 pCi/g for Ra-226. The activity used to model each radionuclide was based on the isotopic net concentration.

RESRAD modeling using the larger of the MDL or reported activity resulted in a net residual dose of 3.356 mrem/y with an increased cancer risk of 6.245×10^{-5} for the backfill material and 2.501 mrem/y with an increased cancer risk of 4.571×10^{-5} for the trench unit. The modeling parameters and results were presented in Attachments 4 and 5 to the TU166 SUPR (Appendix F).

The results of the modeling efforts determined that the potential TU166 dose due to activity concentrations greater than or equal to the MDL was 3.356 mrem/y with an increased cancer risk of 6.245×10^{-5}, which supports radiological free release, No further radiological action was recommended in the TU166 SUPR (Appendix F).

4.1.4 TU166 Backfill Activities

Imported fill was selected as the appropriate backfill material for TU166 because there were no suitable radiologically processed and released excavated soil survey units available. The radiological and chemical analytical reports for the imported fill are provided in Appendix M.

Concurrence to backfill TU166 was obtained from the RASO on May 21, 2010 and backfill activities commenced on June 23, 2010. Approximately 186 cubic yards of soil was placed in TU166 to grade followed by the application of road base material over the backfilled trench. Backfilling activities were completed on June 28, 2010. Backfill activities were performed in accordance with the HPNS Basewide Construction Specifications (TtEC 2009b). A summary of the activities performed to support the recommended radiological free release of TU166 is provided in Table 3-1.

4.2 TRENCH SURVEY UNIT 172

TU172 is located on the southeast side of Work Area 16 West along Crisp Road within Parcel UC3 (Figures 3-2 and 4-1). Formerly designated as part of TU170, TU172 was separated from TU170 on June 18, 2010 to facilitate the gas utility line reroute activities. TU172 connects to TU170 on the east. No pipe was found to the west of TU172 during the storm drain and sanitary sewer systems excavation activities. There are no IR Program sites associated with TU172.

TU172 consists of five storm drain trench segments and no sanitary sewer trench segments. As identified on Figure 4-1, these trench segments include:

- 03-E16-00-1Y
- 03-E16-00-8F
- 03-E16-00-8G
- 03-E16-00-8H
- 03-E16-00-8J

Trench segments 03-E16-00-1Y and -8F continued toward the east and transitioned into TU170. Only trench segment 03-E16-00-1Y was identified in the Design Plan presented in Attachment 2 to the Execution Plan (TtEC 2010a). The remaining trench segments were found during excavation of trench segment 03-E16-00-1Y.

4.2.1 TU172 Removal Action Activities

Excavation activities were initiated for TU172 on April 29, 2010 in trench segment 03-E16-00-1Y. A total of 22 truckloads (approximately 264 cubic yards) of soil were excavated from TU172 during the TCRA activities (Table 3-3). Soil excavated from TU172 was radiologically

processed in RSY2 (Table 3-4). Following the completion of excavation on June 18, 2010, TU172 had an exposed surface area of 314 m^2 and was 313 linear feet in length (Table 3-1). The maximum excavated TU172 depth ranged between 3 feet and 4 feet bgs (Table 3-2).

No sediment samples were collected and no radiological surveys were performed for the TU172 pipes. Consequently, there are no sediment sample or radiological survey results associated with TU172 piping. Pipes associated with TU172 crumbled upon removal and the debris was transferred along with the surrounding excavated soil to RSY2 for radiological processing. As indicated in Table 3-2, the storm drain pipe found in TU172 was 4-inch-diameter CIP located at depths of 3 feet to 4 feet bgs.

4.2.2 TU172 Piping Remaining in Place

No known storm drain or sanitary sewer piping associated with TU172 remained in place on Parcel UC3 following completion of the TCRA activities.

4.2.3 TU172 FSS Summary

The final 18 systematic FSS soil samples were collected from the exposed sidewalls and bottom of excavated TU172 and submitted to the laboratory for analysis by gamma spectroscopy on June 21, 2010. No radioactivity above the release criteria specified in the AM (DON 2006) was identified in the FSS soil samples for any ROC. The release criteria are identified in Tables 2-1 and 2-2. Figure 4-1 depicts the final 18 FSS sample collection locations in TU172. The laboratory analytical reports were presented in Attachment 2 to the TU172 SUPR provided in Appendix F.

For the FSS, TU172 was defined as the sum of the trench unit and the backfill material composed of a volume of imported fill. The average net residual radioactivity concentrations for material used as backfill in TU172 were 0.053 pCi/g for Cs-137, 0.070 pCi/g for Sr-90, and 0.373 pCi/g for Ra-226. The trench unit average net residual radioactivity concentrations were 0.045 pCi/g for Cs-137, 0.211 pCi/g for Sr-90, and 0.051 pCi/g for Ra-226. The activity used to model each radionuclide was based on the isotopic net concentration.

RESRAD modeling using the larger of the MDL or reported activity resulted in a net residual dose of 3.643 mrem/y with an increased cancer risk of 6.631×10^{-5} for the backfill material and 0.8232 mrem/y with an increased cancer risk of 1.343×10^{-5} for the trench unit. The modeling parameters and results were presented in Attachments 4 and 5 to the TU172 SUPR (Appendix F).

The results of the modeling efforts determined that the potential TU172 dose due to activity concentrations greater than or equal to the MDL was 3.643 mrem/y with an increased cancer risk of 6.631×10^{-5}, which supports radiological free release. No further radiological action was recommended in the TU172 SUPR (Appendix F).

4.2.4 TU172 Backfill Activities

Imported fill was selected as the appropriate backfill material for TU172 because there were no suitable radiologically processed and released excavated soil survey units available. The radiological and chemical analytical reports for the imported fill are provided in Appendix M.

The RASO concurred with backfilling TU172 on June 23, 2010 and backfill activities were initiated on July 7, 2010. Approximately 161 cubic yards of imported fill was placed in TU172 to grade followed by the application of road base material over the backfilled trench. Backfill activities were performed in accordance with the HPNS Basewide Construction Specifications (TtEC 2009b). TU172 backfill activities were completed on July 7, 2010. A summary of the activities performed to support the recommended radiological free release of TU172 is provided in Table 3-1.

4.3 TRENCH SURVEY UNIT 173

TU173 is located on the north side of Crisp Road at the east end of Work Area 16 West within Parcel UC3 (Figures 3-2 and 4-1). TU173 connects to TU182 (Work Area 16 Central) on the east and TU181 on the south. On the west, excavation of TU173 was terminated at a retaining wall on the SFRA property (formerly Parcel A). There are no IR Program Sites associated with TU173.

TU173 is composed of three storm drain trench segments and two sanitary sewer trench segments. As identified on Figure 4-1, these trench segments include:

<u>Storm Drain Trench Segments</u>

- 03-E16-00-1P
- 03-E16-00-1Q
- 03-E16-00-1R

<u>Sanitary Sewer Trench Segments</u>

- 03-E16-00-1J
- 03-E16-00-2A

Trench segments 03-E16-00-1P, -1Q, and -1R continued toward the south and transitioned into TU181. Trench segment 03-E16-00-2A extended into TU182 (Work Area 16 Central) on the east. Each of the trench segments associated with TU173 was identified in the Design Plan presented in Attachment 2 to the Execution Plan (TtEC 2010a).

4.3.1 TU173 Removal Action Activities

Excavation activities commenced for TU173 on July 22, 2010 in trench segment 03-E16-00-2A. A total of 52 truckloads (approximately 624 cubic yards) of soil were excavated from TU173 during the TCRA activities (Table 3-3). Soil excavated from TU173 was radiologically processed in both RSY2 and RSY3 (Table 3-4). Following the completion of excavation on August 26, 2010, TU173 exhibited an exposed surface area of 694 m^2 and was 485 linear feet in

ED_006787_00017608-00056

length (Table 3-1). The maximum excavated TU173 depth ranged between 3 feet and 7 feet bgs (Table 3-2).

No sediment samples were collected from the TU173 piping. Consequently, there are no sediment sample analytical results associated with TU173 piping. Pipes associated with TU173 disintegrated during removal and the debris was transferred along with the surrounding excavated soil to RSY2 and RSY3 for radiological processing. As indicated in Table 3-2, storm drain trench segments 03-E16-00-1P and -1Q contained 4-inch-diameter VCP and -1R contained 6-inch-diameter concrete pipe. Sanitary sewer trench segments 03-E16-00-1J and -2A contained 4-inch-diameter and 6-inch-diameter VCP. The TU173 pipes were found at depths ranging from 3 feet to 7 feet bgs.

Manhole MH510 was removed from TU173 during the storm drain and sanitary sewer excavation activities. An inadequate volume of sediment was available in Manhole MH510 for sample collection and analysis. At the direction of the DON, radiological survey activities were not performed on Manhole MH510 in an effort to expedite completion of the main traffic corridor through HPNS. As indicated in Table 3-5, the brick materials forming the sidewalls of Manhole MH510 were placed in LLRW bin BKRU025997G12 on August 13, 2010 for off-site disposal by the DON radiological waste contractor.

4.3.2 TU173 Piping Remaining in Place

During the Parcel UC3 TCRA, a total of 264 linear feet of sanitary sewer trench segment 03-E16-00-1J was removed. Excavation of this trench segment was interrupted to protect the storm water outfall adjacent to the SFRA property boundary on the north and was terminated on the west at the SFRA retaining wall. Consequently, 20 linear feet of trench segment 03-E16-00-1J near the storm water outfall and 10 linear feet near the SFRA retaining wall were left in place following the completion of the removal action (Table 3-7).

Radiological surveys were performed for the two sections of trench segment 03-E16-00-1J pipe remaining in place on Parcel UC3 on August 18 and 23, 2010 (survey numbers HPS-PEPIPE-081910-007 and -082310-008). The survey activities consisted of manual gamma scans, static measurements, and the collection of swipe samples. The survey results did not identify the presence of either fixed or removable radioactivity above the release criteria. The radiological survey results for the pipes remaining in place are provided in Appendix B.

The DON concluded that the TU173 sanitary sewer pipes remaining in place were unlikely to be contaminated. This conclusion was based on the removal of 264 linear feet of trench segment 03-E16-00-1J, radiological survey results for the pipes left in place, and the 18 FSS soil samples collected from the exposed trench sidewalls and bottom.

4.3.3 TU173 FSS Summary

The final 18 systematic FSS soil samples were collected from the exposed sidewalls and bottom of excavated TU173 and submitted to the laboratory for analysis on August 13, 2010. No radioactivity above the release criteria specified in the AM (DON 2006) was identified in the FSS soil samples for any ROC. The release criteria are identified in Tables 2-1 and 2-2. Figure 4-1 depicts the final 18 systematic FSS sample collection locations in TU173. The laboratory analytical reports were presented in Attachment 2 to the TU173 SUPR provided in Appendix F.

TU173 was defined for the FSS as the sum of the trench unit and the backfill material composed of both radiologically processed and released excavated soil survey units and a volume of imported fill. The average net residual radioactivity concentrations for material used as backfill in TU173 were 0.042 pCi/g for Cs-137, 0.097 pCi/g for Sr-90, and 0.198 pCi/g for Ra-226. The trench unit average net residual radioactivity concentrations were 0.031 pCi/g for Cs-137, 0.131 pCi/g for Sr-90, and 0.057 pCi/g for Ra-226. The activity used to model each radionuclide was based on the isotopic net concentration.

RESRAD modeling using the larger of the MDL or reported activity resulted in a net residual dose of 3.074 mrem/y with an increased cancer risk of 5.018×10^{-5} for the backfill material and 1.211 mrem/y with an increased cancer risk of 1.870×10^{-5} for the trench unit. The modeling parameters and results were presented in Attachments 7 and 8 to the TU173 SUPR (Appendix F).

The results of the modeling efforts determined that the potential TU173 dose due to activity concentrations greater than or equal to the MDL was 3.074 mrem/y with an increased cancer risk of 5.018×10^{-5}, which supports radiological free release. No further radiological action was recommended in the TU173 SUPR (Appendix F).

4.3.4 TU173 Backfill Activities

Radiologically processed and released excavated soil survey units and a volume of imported fill were selected as the backfill material for TU173. The excavated soil survey units selected included:

- ES-281
- ES-284

Radiological information related to the processing of these excavated soil survey units is summarized in Table 3-4 and their associated laboratory analytical results were discussed in the TU173 SUPR (Appendix F). The radiological and chemical analytical reports for the imported fill are provided in Appendix M.

The RASO concurred with backfilling TU173 on September 1, 2010 and backfilling operations commenced on October 10, 2011. Backfill activities were performed in accordance with the HPNS Basewide Construction Specifications (TtEC 2009b). Soil compaction testing for TU173 was performed and certification achieved on January 28, 2011. At the completion of the backfilling activities on January 28, 2011, approximately 555 cubic yards of soil had been placed in TU173. Soil compaction and site restoration activities are described in Section 7.0 and the compaction test reports are provided in Appendix J. Table 3-1 summarizes the activities performed to support the recommended radiological free release of TU173.

4.4 TRENCH SURVEY UNIT 177

TU177 is located at the west end of Work Area 16 West along the north side of Crisp Road within Parcel UC3 (Figures 3-2 and 4-1). TU177 connects to TU178 on the east and terminates on the west near the HPNS gate located at the intersection of Palou Avenue, Griffith Street, and Crisp Road. There are no IR Program sites associated with TU177.

TU177 is composed of two sanitary sewer trench segments and no storm drain trench segments. As identified on Figure 4-1, these trench segments include:

- 03-E16-00-1A
- 03-E16-00-8M

Trench segment 03-E16-00-1A continued toward the east and transitioned into TU178. Trench segment 03-E16-00-8M extended toward the east and transitioned from TU177 through TU183 (Work Area 16 Central). Only trench segment 03-E16-00-1A was identified in the Design Plan presented in Attachment 2 to the Execution Plan (TtEC 2010a). Trench segment 03-E16-00-8M was found during excavation of trench segment 03-E16-00-1A.

4.4.1 TU177 Removal Action Activities

Excavation of TU177 commenced on July 20, 2010 in trench segment 03-E16-00-8M. A total of 88 truckloads (approximately 1,056 cubic yards) of soil were excavated from TU177 during the TCRA activities (Table 3-3). Soil excavated from TU177 was radiologically processed in RSY2 (Table 3-4). Following the completion of excavation on August 19, 2010, TU177 had an exposed surface area of 906 m^2 and was 290 linear feet in length (Table 3-1). The maximum excavated TU177 depth ranged between 11 feet and 15 feet bgs (Table 3-2).

During the Parcel UC3 TCRA, 39 sections of pipe were excavated from TU177 and placed on plastic pending further activities. The debris from pipes that crumbled during removal was transferred along with the surrounding excavated soil to RSY2 for processing. As indicated in Table 3-2, trench segment 03-E16-00-1A contained 33-inch-diameter concrete pipe and trench

segment 03-E16-00-8M contained 16-inch-diameter DIP. The TU177 pipes were found at depths ranging from 8 feet to 13 feet bgs.

A sufficient volume of sediment for sample collection and analysis was not available in any of the pipe sections removed from TU177. Consequently, there are no sediment sample analytical results associated with this trench unit.

Radiological survey activities were performed for the 39 sections of pipe removed from trench segment 03-E16-00-8M during the Parcel UC3 TCRA activities (Table 3-5). Elevated results were not identified for any of the TU177 pipes surveyed. Each of the surveyed and released pipe sections associated with TU177 was placed in containers for metals recycling. Table 3-5 identifies the disposition of each of the TU177 pipes. Copies of the radiological survey reports are provided in Appendix B.

4.4.2 TU177 Piping Remaining in Place

A total of 359 linear feet of trench segment 03-E16-00-1A and 1,600 linear feet of trench segment -8M were excavated during the Parcel UC3 TCRA activities. Trench segment 03-E16-00-1A continued from TU177 into TU178 and trench segment -8M extended through several trench survey units including TU177 through TU183. Excavation of these trench segments was terminated on the west end of TU177 near the HPNS gate on Crisp Road to facilitate connections to the active existing pipes located at the SFRA property boundary. Based on historical drawings, an estimated 22 linear feet of each of these trench segments was left in place following the completion of the Parcel UC3 TCRA (Table 3-7). To ensure that no residual contamination was associated with these trench segments, radiological surveys were performed on August 11, 2010 (HPS-PEPIPE-081110-003). Since no radioactivity above the release criteria (Table 2-1) was identified during the survey activities, the pipe sections remaining in place were plugged with concrete. The radiological survey results for the pipes remaining in place are provided in Appendix B.

In addition, Manhole MH500 and an estimated 9 linear feet of trench segment 03-E16-00-1V were left in place on Parcel UC3 to facilitate connections to the active existing pipes located to the west of the HPNS gate on Crisp Road (Table 3-7). The 9 linear feet of trench segment 03-E16-00-1V extended to the west of Manhole MH500.

The DON concluded that the pipes associated with trench segments 03-E16-00-1A, -8M, -1V and Manhole MH500 were unlikely to be contaminated. In addition to the pipe radiological survey results, this conclusion was based on the soil sample analytical results for each of the trench surveys units located within Work Area 16 West.

4.4.3 TU177 FSS Summary

A total of 18 final systematic FSS soil samples were collected from the exposed sidewalls and bottom of excavated TU177 and submitted to the laboratory for analysis on August 20, 2010. No radioactivity above the release criteria specified in the AM (DON 2006) was identified in the FSS soil samples for any ROC. The release criteria are identified in Tables 2-1 and 2-2. Figure 4-1 depicts the FSS sample collection locations in TU177. The laboratory analytical reports were presented in Attachment 2 to the TU177 SUPR provided in Appendix F.

For the FSS, TU177 was defined as the sum of the trench unit and the backfill material composed of both radiologically processed and released excavated soil survey units and a volume of imported fill. The average net residual radioactivity concentrations for material used as backfill in TU177 were 0.048 pCi/g for Cs-137, 0.126 pCi/g for Sr-90, and 0.315 pCi/g for Ra-226. The trench unit average net residual radioactivity concentrations were 0.038 pCi/g for Cs-137, 0.129 pCi/g for Sr-90, and 0.254 pCi/g for Ra-226. The activity used to model each radionuclide was based on the isotopic net concentration.

RESRAD modeling using the larger of the MDL or reported activity resulted in a net residual dose of 5.65 mrem/y with an increased cancer risk of 8.950×10^{-5} for the backfill material and 4.655 mrem/y with an increased cancer risk of 7.342×10^{-5} for the trench unit. The modeling parameters and results were presented in Attachments 7 and 8 to the TU177 SUPR (Appendix F).

The results of the modeling efforts determined that the potential TU177 dose due to activity concentrations greater than or equal to the MDL was 5.65 mrem/y with an increased cancer risk of 8.950×10^{-5}, which supports radiological free release. No further radiological action was recommended in the TU177 SUPR (Appendix F).

4.4.4 TU177 Backfill Activities

Radiologically processed and released excavated soil survey units and a volume of imported fill were selected as the backfill material for TU177. The excavated soil survey units selected included:

- ES-313
- ES-316

Radiological information related to the processing of these excavated soil survey units is summarized in Table 3-4 and their associated laboratory analytical results were discussed in the TU177 SUPR (Appendix F). The radiological and chemical analytical reports for the imported fill are provided in Appendix M.

The RASO concurred with backfilling TU177 on October 28, 2010 and backfilling operations were initiated on November 3, 2010. Backfill activities were performed in accordance with the HPNS Basewide Construction Specifications (TtEC 2009b). Soil compaction testing for TU177 was performed on November 5, 2010. At the completion of backfilling activities on January 28, 2011, an estimated 1,275 cubic yards of soil had been placed in TU177. Soil compaction and site restoration activities are described in Section 7.0 and the compaction test reports are provided in Appendix J. Table 3-1 summarizes the activities performed to support the recommended radiological free release of TU177.

4.5 TRENCH SURVEY UNIT 178

TU178 is located toward the west end of Work Area 16 West along the north side of Crisp Road within Parcel UC3 (Figures 3-2 and 4-1). TU178 connects TU179 on the east, TU166 on the south, and TU177 on the west. There are no IR Program sites associated with TU178.

TU178 is composed of two storm drain trench segments and four sanitary sewer trench segments. As identified on Figure 4-1, these trench segments include:

Storm Drain Trench Segments	Sanitary Sewer Trench Segments
• 03-E16-00-1D	• 03-E16-00-1A
• 03-E16-00-8N	• 03-E16-00-1B
	• 03-E16-00-1C
	• 03-E16-00-8M

Trench segments 03-E16-00-1A and -8M extended toward the west and continued into TU177. Trench segments 03-E16-00-1B and -1D continued southward and transitioned into TU166. Trench segments 03-E16-00-1C and -8M extended toward the east and transitioned into TU179. With the exception of 03-E16-00-8M and -8N, each of the trench segments associated with TU178 was identified in the Design Plan presented in Attachment 2 to the Execution Plan (TtEC 2010a). Trench segments 03-E16-00-8M and -8N were found during excavation of trench segment -1C and -1D, respectively.

4.5.1 TU178 Removal Action Activities

Excavation activities commenced for TU178 on April 2, 2010 in trench segment 03-E16-00-1D. A total of 92 truckloads (approximately 1,104 cubic yards) of soil were excavated from TU178 during the TCRA activities (Table 3-3). Soil excavated from TU178 was radiologically processed in RSY2 and RSY3 (Table 3-4). Following the completion of excavation on August 20, 2010, TU178 exhibited an exposed surface area of 900 m^2 and 394 linear feet in length

(Table 3-1). The maximum excavated TU178 depth ranged between 4 feet and 16 feet bgs (Table 3-2).

During the Parcel UC3 TCRA, 18 sections of pipe and Manholes MH501 and MH502 were removed from TU178 and placed on plastic pending further activities. The majority of the TU178 pipes disintegrated upon removal and the debris was transferred along with the surrounding excavated soil to RSY2 or RSY3 for processing. As indicated in Table 3-2, trench segments 03-E16-00-1A, -1C, and -1D contained 16-inch-diameter or 33-inch-diameter concrete pipes located at depths between 3 feet and 13 feet bgs. Trench segment 03-E16-00-1B and -8N contained 6-inch-diameter and 8-inch-diameter VCP, respectively. The pipes in these trench segments were found at depths between 3 feet and 7 feet bgs. In addition, trench segment 03-E16-00-8M contained 16-inch-diameter DIP located at depths between 13 feet and 15 feet bgs.

A sufficient volume of sediment for sample collection and analysis was found in one pipe section excavated from trench segment 03-E16-00-1D (Table 3-6). No sediment samples were collected from Manholes MH501 or MH502 due to an insufficient volume of available material. The laboratory analytical reports identified the presence of Cs-137 above the release limit at 0.1222 pCi/g in the sediment sample collected from trench segment 03-E16-00-1D (03-PEPI-0021-01). The pipe section containing the contaminated sediment sample was placed in LLRW bin BKRU026202G3 on July 23, 2010 for off-site disposal by the DON radiological waste contractor. The sediment sample laboratory analytical results are provided in Appendix C.

Radiological survey activities were performed for the 18 sections of pipe excavated from trench segments 03-E16-00-1C, -1D, and -8M during the Parcel UC3 TCRA activities (Table 3-5). No elevated results were identified for any of the TU178 pipes surveyed. The TU178 surveyed and released pipes were either placed in containers for metals recycling or were transferred to the DON non-LLRW waste contractor for off-site disposal or recycling. Tables 3-5 and 3-6 identify the final disposition of the TU178 piping. Copies of the radiological survey reports are provided in Appendix B.

No survey activities were performed for Manhole MH501 during the Parcel UC3 TCRA. At the direction of the DON, the materials forming the sidewalls of this manhole was crushed and the debris placed in LLRW bins BKRU026470G13 and DB1142D2 on August 16, 2010 to expedite completion of the main traffic corridor through HPNS.

Due to the presence of Cs-137 contamination in one pipe sediment sample, 11 investigative soil samples were collected from TU178 and submitted to the laboratory for analysis. No radioactivity above the release criteria was identified in these investigative soil samples for any ROC. The laboratory analytical reports were presented in Attachment 2 of the TU178 SUPR provided in Appendix F.

4.5.2 TU178 Piping Remaining in Place

During excavation of TU178 storm drain and sanitary sewer pipes, the majority of the materials forming the sidewalls of Manhole MH502 were removed and placed on plastic pending further activities. The back wall of this manhole was left in place embedded in the retaining wall located on the SFRA property to the north since it could not be removed without adversely affecting the integrity of the retaining wall (Table 3-7). Radiological survey activities were performed for the portion of Manhole MH502 left in place on August 16, 2010 (HPS-PEPIPE-081610-005). Since no radioactivity above the release criteria was identified during the survey activities, the DON concluded that the back wall of MH502 left in place was unlikely to be contaminated. The radiological survey results for Manhole MH502 are provided in Appendix B.

4.5.3 TU178 FSS Summary

The final 18 systematic FSS soil samples were collected from the exposed sidewalls and bottom of excavated TU178 and submitted to the laboratory for analysis on August 24, 2010. No radioactivity above the release criteria specified in the AM (DON 2006) was identified in the FSS soil samples for any ROC. The release criteria are identified in Tables 2-1 and 2-2. Figure 4-1 depicts the FSS sample collection locations in TU178. The laboratory analytical reports were presented in Attachment 2 to the TU178 SUPR (Appendix F).

TU178 was defined for the FSS as the sum of the trench unit and the backfill material composed of both radiologically processed and released excavated soil survey units and a volume of imported fill. The average net residual radioactivity concentrations for material used as backfill in TU178 were 0.046 pCi/g for Cs-137, 0.115 pCi/g for Sr-90, and 0.295 pCi/g for Ra-226. The trench unit average net residual radioactivity concentrations were 0.037 pCi/g for Cs-137, 0.272 pCi/g for Sr-90, and 0.132 pCi/g for Ra-226. The activity used to model each radionuclide was based on the isotopic net concentration.

RESRAD modeling using the larger of the MDL or reported activity resulted in a net residual dose of 5.26 mrem/y with an increased cancer risk of 8.342×10^{-5} for the backfill material and 3.19 mrem/y with an increased cancer risk of 4.802×10^{-5} for the trench unit.

The results of the modeling efforts determined that the potential TU178 dose due to activity concentrations greater than or equal to the MDL was 5.26 mrem/y with an increased cancer risk of 8.342×10^{-5}, which supports radiological free release. No further radiological action was recommended in the TU178 SUPR (Appendix F).

4.5.4 TU178 Backfill Activities

Radiologically processed and released excavated soil survey units and a volume of imported fill were selected as the backfill material for TU178. The excavated soil survey units selected included:

- ES-287
- ES-288
- ES-299

Radiological information related to the processing of these excavated soil survey units is summarized in Table 3-4 and the associated laboratory analytical results were discussed in the TU178 SUPR (Appendix F). The radiological and chemical analytical reports for the imported fill are provided in Appendix M.

Concurrence with backfilling TU178 was obtained from the RASO on October 20, 2010 and backfilling commenced on November 2, 2010. Backfill activities were performed in accordance with the HPNS Basewide Construction Specifications (TtEC 2009b). Soil compaction testing for TU178 was performed on November 4, 2010. At the completion of backfilling activities on January 28, 2010, an estimated 1,297 cubic yards of soil had been placed in TU178. Soil compaction and site restoration activities are described in Section 7.0 and the compaction test reports are provided in Appendix J. Table 3-1 summarizes the activities performed to support the recommended radiological free release of TU178.

4.6 TRENCH SURVEY UNIT 179

TU179 is located in the central portion of Work Area 16 West along Crisp Road within Parcel UC3 (Figures 3-2 and 4-1). TU179 connects to TU180 on the east and TU178 on the west. On the north, TU179 terminates at the SFRA property boundary and on the south at the Parcel UC3 property boundary. There are no IR Program sites associated with TU179.

TU179 consists of five storm drain trench segments and three sanitary sewer trench segments. As identified on Figure 4-1, these trench segments include:

<u>Storm Drain Trench Segments</u>

- 03-E16-00-1E
- 03-E16-00-1F
- 03-E16-00-1G
- 03-E16-00-2W
- 03-E16-00-8O

<u>Sanitary Sewer Trench Segments</u>

- 03-E16-00-1C
- 03-E16-00-1H
- 03-E16-00-8M

Trench segment 03-E16-00-1C continued from TU178 into TU179 and trench segment -8M extended from TU177 through TU178, transitioned into TU179, and then continued into TU180. In addition, trench segments 03-E16-00-1F and -1H extended toward the east from TU177 into TU180. With the exception of 03-E16-00-8M and -8O, each of the trench segments associated with TU179 was identified in the Design Plan presented in Attachment 2 to the Execution Plan (TtEC 2010a). Trench segments 03-E16-00-8M and -8O were found during the TU179 excavation activities.

4.6.1 TU179 Removal Action Activities

Excavation activities for TU179 were initiated on April 2, 2010 in trench segment 03-E16-00-1E. A total of 71 truckloads (approximately 852 cubic yards) of soil were excavated from TU179 during the TCRA activities (Table 3-3). Soil excavated from TU179 was radiologically processed in RSY2 (Table 3-4). Following the completion of excavation on August 23, 2010, TU179 had an exposed surface area of 850 m^2 and was 517 linear feet in length (Table 3-1). The maximum excavated TU179 depth ranged between 4 feet and 14 feet bgs (Table 3-2).

A total of 10 sections of pipe and Manholes MH503, MH504, and MH505 were removed from TU179 and placed on plastic pending further activities during the Parcel UC3 TCRA. Piping that disintegrated during removal was transferred along with the surrounding soil to RSY2 for processing. As indicated in Table 3-2, trench segments 03-E16-00-1C, -1E, -1F, and -1H contained 18-inch-diameter to 33-inch-diameter concrete pipe located at depths between 6 feet and 11 feet bgs. Trench segments 03-E16-00-1G and -8O contained 8-inch-diameter VCP located at depths ranging from 5 feet to 12 feet bgs. Trench segment 03-E16-00-2W contained 6-inch-diameter CIP and -8M contained 16-inch-diameter DIP. The pipes in these trench segments were found at depths between 2 feet and 13 feet bgs.

No sediment samples were collected from the pipes or manholes associated with TU179 during the Parcel UC3 TCRA due to an insufficient volume of available material. Consequently, there are no sediment sample analytical results associated with TU179 piping.

Radiological survey activities were performed for 10 sections of pipe excavated from trench segments 03-E16-00-1C, -1F, and -8M during the Parcel UC3 TCRA activities (Table 3-5). No elevated results were identified for any of the TU179 pipes surveyed. Each of the TU179 surveyed and released pipes was either placed in containers for metals recycling or was transferred to the DON non-LLRW waste contractor for off-site disposal or recycling. Copies of the radiological survey reports are provided in Appendix B.

Manholes MH503, 504, and 505 were excavated from TU179 during the removal action activities. At the direction of the DON, no survey activities were performed for these manholes to expedite completion of the main traffic corridor through HPNS. Each of the TU179 manholes

was crushed and the debris placed into LLRW bins for off-site disposal by the DON radiological waste contractor. Tables 3-5 and 3-6 identify the final disposition of the TU179 piping.

4.6.2 TU179 Piping Remaining in Place

A total of 35 linear feet of storm drain trench segment 03-E16-00-1E was removed during the TU179 excavation activities prior to termination at the Parcel UC3 property boundary. Based on historical drawings, an estimated 21 linear feet of this trench segment was left in place to avoid adversely affecting the structural integrity of non-radiologically impacted Building 820 located on Parcel E (Table 3-7). To ensure that no residual contamination was associated with trench segment 03-E16-00-1E, radiological survey activities were performed for the section of pipe remaining in place (HPS-PEPIPE-081810-006). Since no radioactivity above the release criteria was identified during the survey activities, the DON concluded that the pipe remaining in place was unlikely to be contaminated. The radiological survey results for the pipe remaining in place are provided in Appendix B.

Based on historical drawings, an estimated 7 linear feet of storm drain trench segment 03-E16-00-1G was left in place on Parcel UC3 following the removal of 22 linear feet of this trench segment (Table 3-7). The 7 linear feet of this trench segment was left in place to avoid adversely affecting the structural integrity of the SFRA property retaining wall. Radiological survey activities were performed for the trench segment 03-E16-00-1G pipe remaining in place on August 19, 2010 (HPS-PEPIPE-081910-007). Since no activity above the release criteria was identified during the survey activities, the DON concluded that the pipe remaining in place was unlikely to be contaminated.

4.6.3 TU179 FSS Summary

At the conclusion of TU179 excavation, 18 systematic FSS soil samples were collected from the exposed sidewalls and bottom of TU179 and submitted to the laboratory for analysis on September 1, 2010. No radioactivity above the release criteria specified in the AM (DON 2006) was identified in the FSS soil samples for any ROC. The release criteria are identified in Tables 2-1 and 2-2. Figure 4-1 depicts the FSS sample collection locations in TU179. The laboratory analytical reports were presented in Attachment 2 to the TU179 SUPR provided in Appendix F.

TU179 was defined for the FSS as the sum of the trench unit and the backfill material composed of both radiologically processed and released excavated soil survey units and a volume of imported fill. The average net residual radioactivity concentrations for material used as backfill in TU179 were 0.048 pCi/g for Cs-137, 0.095 pCi/g for Sr-90, and 0.300 pCi/g for Ra-226. The trench unit average net residual radioactivity concentrations were 0.043 pCi/g for Cs-137, 0.175 pCi/g for Sr-90, and 0.157 pCi/g for Ra-226. The activity used to model each radionuclide was based on the isotopic net concentration.

RESRAD modeling using the larger of the MDL or reported activity resulted in a net residual dose of 5.08 mrem/y with an increased cancer risk of 8.139×10^{-5} for the backfill material and 3.125 mrem/y with an increased cancer risk of 4.862×10^{-5} for the trench unit. The modeling parameters and results were presented in Attachments 7 and 8 to the TU179 SUPR (Appendix F).

The results of the modeling efforts determined that the potential TU179 dose due to activity concentrations greater than or equal to the MDL was 5.08 mrem/y with an increased cancer risk of 8.139×10^{-5}, which supports radiological free release. No further radiological action was recommended in the TU179 SUPR (Appendix F).

4.6.4 TU179 Backfill Activities

Radiologically processed and released excavated soil survey units and a volume of imported fill were selected as the backfill materials for TU179. The excavated soil survey units selected included:

- ES-296
- ES-297

Radiological information related to the processing of these excavated soil survey units is summarized in Table 3-4 and their associated laboratory analytical results were discussed in the TU179 SUPR (Appendix F). The radiological and chemical analytical reports for the imported fill are provided in Appendix M.

The RASO concurred with backfilling TU179 on October 19, 2010 and backfilling operations were initiated on October 20, 2010. Backfill activities were performed in accordance with the HPNS Basewide Construction Specifications (TtEC 2009b). Soil compaction testing was performed on October 28, 2010 and November 4, 2010. At the completion of backfilling operations on January 28, 2011, an estimated 1,439 cubic yards of soil had been placed in TU179. Soil compaction and site restoration activities are described in Section 7.0 and the compaction test reports are provided in Appendix J. Table 3-1 summarizes the activities performed to support the recommended radiological free release of TU179.

4.7 TRENCH SURVEY UNIT 180

TU180 is located in the central portion of Work Area 16 West along Crisp Road within Parcel UC3 (Figures 3-2 and 4-1). TU180 connects to TU181 on the east and TU179 on the west. There are no IR Program sites associated with TU180.

TU180 consists of one storm drain trench segment and two sanitary sewer trench segments. As identified on Figure 4-1, these trench segments include:

Storm Drain Trench Segment	Sanitary Sewer Trench Segments
• 03-E16-00-1F	• 03-E16-00-1H
	• 03-E16-00-8M

Trench segments 03-E16-00-1F, -1H, and -8M continued to the west and east of TU180 and transitioned into TU179 and TU181, respectively. With the exception of 03-E16-00-8M, each of the trench segments associated with TU180 was identified in the Design Plan presented in Attachment 2 to the Execution Plan (TtEC 2010a). Trench segment 03-E16-00-8M was found during the Parcel UC3 TCRA excavation activities. Although identified in the Design Plan, trench segment 03-E16-00-1I and Manhole MH506 were not found during the TU180 activities after several excavation attempts. This trench segment and MH506 may have been removed during earlier HPNS activities.

4.7.1 TU180 Removal Action Activities

Excavation activities for TU180 commenced on August 18, 2010 in trench segment 03-E16-00-1H. A total of 67 truckloads (approximately 804 cubic yards) of soil were excavated from TU180 during the TCRA activities (Table 3-3). Soil excavated from TU180 was radiologically processed in RSY2 (Table 3-4). Following the completion of excavation on August 25, 2010, TU180 exhibited an exposed surface area of 857 m^2 and was 555 linear feet in length (Table 3-1). The maximum excavated TU180 depth ranged between 5 feet and 9 feet bgs (Table 3-2).

A total of 36 sections of pipe were removed from TU180 and placed on plastic pending further activities during the Parcel UC3 TCRA. No manholes were associated with TU180. Pipes that crumbled during removal were transferred along with the surrounding soil to RSY2 for processing. As indicated in Table 3-2, trench segments 03-E16-00-1F and -1H contained 18-inch-diameter and 24-inch-diameter concrete pipe located at depths between 5 feet and 7 feet bgs. Trench segment 03-E16-00-8M contained 16-inch-diameter DIP located at 4 feet bgs.

An insufficient volume of sediment was found in the TU180 pipes for sample collection and analysis. Consequently, there are no sediment sample analytical results associated with this trench survey unit.

Radiological survey activities were performed for 36 sections of pipe removed from trench segments 03-E16-00-1F, 1H, and 8M during the Parcel UC3 removal action (Table 3-5). No elevated results were identified for any of the TU180 pipes surveyed. Each of the TU180 surveyed and released pipes was either placed in containers for metal recycling or was transferred to the DON non-LLRW waste contractor for off-site disposal or recycling. Table 3-5 identifies the final disposition of the TU180 pipes. Copies of the radiological survey reports are provided in Appendix B.

4.7.2 TU180 Piping Remaining in Place

No known storm drain or sanitary sewer piping associated with TU180 remained in place on Parcel UC3 following completion of the TCRA activities.

4.7.3 TU180 FSS Summary

A total of 18 systematic FSS soil samples were collected from the exposed sidewalls and bottom of excavated TU180 and submitted to the laboratory for analysis on September 2, 2010. No radioactivity above the release criteria specified in the AM (DON 2006) was identified in the FSS soil samples for any ROC. The release criteria are identified in Tables 2-1 and 2-2. Figure 4-1 depicts the FSS sample collection locations in TU180. The laboratory analytical reports were presented in Attachment 2 to the TU180 SUPR provided in Appendix F.

For the FSS, TU180 was defined as the sum of the trench unit and the backfill material composed of both a radiologically processed and released excavated soil survey unit and a volume of imported fill. The average net residual radioactivity concentrations for material used as backfill in TU180 were 0.050 pCi/g for Cs-137, 0.078 pCi/g for Sr-90, and 0.337 pCi/g for Ra-226. The trench unit average net residual radioactivity concentrations were 0.040 pCi/g for Cs-137, 0.141 pCi/g for Sr-90, and 0.025 pCi/g for Ra-226. The activity used to model each radionuclide was based on the isotopic net concentration.

RESRAD modeling using the larger of the MDL or reported activity resulted in a net residual dose of 5.629 mrem/y with an increased cancer risk of 9.043×10^{-5} for the backfill material and 0.9581 mrem/y with an increased cancer risk of 1.380×10^{-5} for the trench unit. The modeling parameters and results were presented in Attachments 7 and 8 to the TU180 SUPR (Appendix F).

The results of the modeling efforts determined that the potential TU180 dose due to activity concentrations greater than or equal to the MDL was 5.629 mrem/y with an increased cancer risk of 9.043×10^{-5}, which supports radiological free release. No further radiological action was recommended in the TU180 SUPR (Appendix F).

4.7.4 TU180 Backfill Activities

Radiologically processed and released excavated soil survey unit ES-287 and a volume of imported fill were selected as the backfill materials for TU180. Radiological information related to the processing of this excavated soil survey unit is summarized in Table 3-4 and the associated laboratory analytical results were discussed in the TU180 SUPR (Appendix F). The radiological and chemical analytical reports for the imported fill are provided in Appendix M.

Concurrence with backfilling TU180 was obtained from the RASO on September 29, 2010 and backfill activities commenced on October 1, 2010. Backfill activities were performed in accordance with the HPNS Basewide Construction Specifications (TtEC 2009b). Soil

compaction testing was performed on October 11 and 15, 2010. At the completion of backfill activities on October 20, 2010, approximately 694 cubic yards of soil had been placed in TU180. Soil compaction and site restoration activities are described in Section 7.0 and the compaction test reports are provided in Appendix J. Table 3-1 summarizes the activities performed to support the recommended radiological free release of TU180.

4.8 TRENCH SURVEY UNIT 181

TU181 is located at the east end of Work Area 16 West along Crisp Road within Parcel UC3 (Figures 3-2 and 4-1). TU181 connects to TU173 on the north, TU182 on the east, TU170 and TU175 on the south (Work Area 16 Central), and TU180 on the west. There are no IR Program sites associated with TU181.

TU181 is composed of nine storm drain trench segments and two sanitary sewer trench segments. As identified on Figure 4-1, these trench segments include:

Storm Drain Trench Segments

- 03-E16-00-1F
- 03-E16-00-1P
- 03-E16-00-1Q
- 03-E16-00-1R
- 03-E16-00-1S
- 03-E16-00-1T
- 03-E16-00-1Z
- 03-E16-00-2B
- 03-E16-00-8K

Sanitary Sewer Trench Segments

- 03-E16-00-1H
- 03-E16-00-8M

Trench segment 03-E16-00-1F extended toward the west and continued into TU180. Trench segments 03-E16-00-1H and -8M continued toward the west and east and then transitioned into TU180 and TU182, respectively. Trench segments 03-E16-00-1P, -1Q, and -1R continued into TU173 on the north. Trench segments 03-E16-00-1Z and -2B extended toward the south and transitioned into TU170 and TU175, respectively. With the exception of 03-E16-00-8K and -8M, each of the trench segments associated with TU181 was identified in the Design Plan presented in Attachment 2 to the Execution Plan (TtEC 2010a). These trench segments were found during excavation of trench segment 03-E16-00-1H and -1R. Although identified in the Design Plan, trench segment 03-E16-00-1I was not found during the TU181 activities after several excavation attempts. This trench segment may have been removed during earlier HPNS activities.

4.8.1 TU181 Removal Action Activities

On August 5, 2010, excavation of TU181 was initiated in trench segment 03-E16-00-2B. A total of 83 truckloads (approximately 996 cubic yards) of soil were excavated from TU181 during the TCRA activities (Table 3-3). Soil excavated from TU181 was radiologically processed in RSY2 and RSY3 (Table 3-4). Following the completion of excavation on August 26, 2010, TU181 had an exposed surface area of 893 m^2 and was 710 linear feet in length (Table 3-1). The maximum excavated TU181 depth ranged between 5 feet and 10 feet bgs (Table 3-2).

During the TU181 storm drain and sanitary sewer removal activities, 44 sections of pipe and Manholes MH507, MH512, and MH513 were excavated and placed on plastic pending further activities. Pipes that disintegrated during removal were transferred along with the surrounding excavated soil to RSY2 and RSY3 for radiological processing. As indicated in Table 3-2, trench segments 03-E16-00-1P, -1Q, -1S, and -8K contained 4-inch-diameter and 6-inch-diameter VCP. Trench segment 03-E16-00-8M contained 16-inch-diameter DIP. The remaining TU181 trench segments contained 6-inch-diameter to 24-inch-diameter concrete pipe. The TU181 pipes were found between 4 feet and 9 feet bgs.

A sufficient volume of sediment for sample collection and analysis was found in Manholes MH512 and MH513 (Table 3-6). No sediment samples were collected from Manhole MH507 or any of the pipes associated with TU181 due to an insufficient volume of available material. The laboratory analytical reports for the manhole sediment samples did not identify the presence radioactivity above the release criteria for any ROC. Although no contamination was identified, the materials forming the walls of Manholes MH512 and MH513 as well as Manhole MH507 were crushed and the debris placed in LLRW bins for disposal by the DON radiological waste contractor. The sediment sample laboratory analytical results are provided in Appendix C.

Radiological survey activities were performed for 44 sections of pipe excavated from trench segments 03-E16-00-1F, -1H, and -8M during the Parcel UC3 TCRA activities (Table 3-5). No elevated results were identified for any of the TU181 pipe surveyed. Each of the surveyed and released pipes was either placed in containers for metals recycling or was transferred to the DON non-LLRW waste contractor for off-site disposal or recycling. Tables 3-5 and 3-6 identify the final disposition of the TU181 piping. The TU181 radiological survey reports are provided in Appendix B.

4.8.2 TU181 Piping Remaining in Place

No known storm drain or sanitary sewer piping associated with TU181 remained in place on Parcel UC3 following completion of the TCRA activities.

4.8.3 TU181 FSS Summary

Eighteen systematic FSS soil samples were collected from the exposed sidewalls and bottom of excavated TU181 on September 7, 2010 and submitted to the laboratory for analysis. No radioactivity above the release criteria specified in the AM (DON 2006) was identified in the FSS soil samples for any ROC. The release criteria are identified in Tables 2-1 and 2-2. Figure 4-1 depicts the FSS sample collection locations in TU181. The laboratory analytical reports were presented in Attachment 2 to the TU181 SUPR provided in Appendix F.

TU181 was defined for the FSS as the sum of the trench unit and the backfill material composed of both a radiologically processed and released excavated soil survey unit and a volume of imported fill. The average net residual radioactivity concentrations for material used as backfill in TU181 were 0.051 pCi/g for Cs-137, 0.086 pCi/g for Sr-90, and 0.337 pCi/g for Ra-226. The trench unit average net residual radioactivity concentrations were 0.045 pCi/g for Cs-137, 0.190 pCi/g for Sr-90, and 0.047 pCi/g for Ra-226. The activity used to model each radionuclide was based on the isotopic net concentration.

RESRAD modeling using the larger of the MDL or reported activity resulted in a net residual dose of 5.81 mrem/y with an increased cancer risk of 9.277×10^{-5} for the backfill material and 1.529 mrem/y with an increased cancer risk of 2.229×10^{-5} for the trench unit. The modeling parameters and results were presented in Attachments 7 and 8 to the TU181 SUPR (Appendix F).

The results of the modeling efforts determined that the potential TU181 dose due to activity concentrations greater than or equal to the MDL was 5.81 mrem/y with an increased cancer risk of 9.277×10^{-5}, which supports radiological free release. No further radiological action was recommended in the TU181 SUPR (Appendix F).

4.8.4 TU181 Backfill Activities

Radiologically processed and released excavated soil survey unit ES-293 and a volume of imported fill were selected as the backfill materials for TU181. Radiological information related to the processing of this excavated soil survey unit is summarized in Table 3-4 and the associated laboratory analytical results were discussed in the TU181 SUPR (Appendix F). The radiological and chemical analytical reports for the imported fill are provided in Appendix M.

The RASO concurred with backfilling TU181 on September 30, 2010 and backfilling operations were initiated on October 4, 2010. Backfill activities were performed in accordance with the HPNS Basewide Construction Specifications (TtEC 2009b). Soil compaction testing was performed for TU181 on October 11 and 15, 2010. At the completion of backfilling operations on October 20, 2010, an estimated 1,010 cubic yards of soil had been placed in TU181. Soil compaction and site restoration activities are described in Section 7.0 and the compaction test

reports are provided in Appendix J. Table 3-1 summarizes the activities performed to support the recommended radiological free release of TU181.

ED_006787_00017608-00074

5.0 WORK AREA 16 CENTRAL

Work Area 16 Central is located along Crisp Road within the central portion of Parcel UC3 (Figures 1-2, 3-2, and 5-1). This area is bounded on the north by the SFRA property (formerly Parcel A), on the east by Work Area 16 East, on the south by Parcel E, and on the west by Work Area 16 West. The radiological work activities performed in Work Area 16 Central included TU170, TU175, TU176, TU182, and TU183. The following sections summarize the work activities completed in Work Area 16 Central to support the recommended radiological release for unrestricted use of the Parcel UC3 property.

5.1 TRENCH SURVEY UNIT 170

TU170 is located in the central portion of Work Area 16 Central within Parcel UC3 along the south side of Crisp Road (Figures 3-2 and 5-1). TU170 connects to TU175, TU176, and TU181 (Work Area 16 West) on the north, TU169 (Work Area 16 East) on the east, TU166 (Work Area 16 West) on the south, and TU172 (Work Area 16 West) on the west. There are no IR Program sites associated with TU170.

TU170 is composed of 13 storm drain trench segments and no sanitary sewer trench segments. As identified on Figure 5-1, these storm drain trench segments include:

- 03-E16-00-1K
- 03-E16-00-1W
- 03-E16-00-1X
- 03-E16-00-1Y
- 03-E16-00-1Z
- 03-E16-00-2F
- 03-E16-00-2P
- 03-E16-00-8C
- 03-E16-00-8D
- 03-E16-00-8E
- 03-E16-00-8F
- 03-E16-00-8I
- 03-E16-00-8K

Trench segments 03-E16-00-1K and -8C extended toward the east and continued into TU169. Both trench segments 03-E16-00-1Y and -8F continued toward the west and transitioned into TU172. On the north, trench segments 06-E16-00-1Z and -8K continued into TU181 and -2F and -8I transitioned into TU175. Trench segment 03-E16-00-2P continued toward the south into TU169. Most of the TU170 trench segments were identified in the Design Plan presented in Attachment 2 to the Execution Plan (TtEC 2010a). Trench segments 03-E16-00-8C through -8F, -8I, and -8K were found during the TU170 excavation activities. Although identified in the Design Plan, trench segment 03-E16-00-1U pipe could not be found after several excavation attempts.

5.1.1 TU170 Removal Action Activities

Excavation activities were initiated for TU170 on April 1, 2010 in trench segment 03-E16-00-2P. A total of 68 truckloads (approximately 816 cubic yards) of soil were excavated from TU170 during the TCRA activities (Table 3-3). Soil excavated from TU170 was radiologically processed in RSY2 (Table 3-4). Following the completion of excavation on June 22, 2010, TU170 had an exposed surface area of 751 m^2 and was 700 linear feet in length (Table 3-1). The maximum excavated TU170 depth ranged between 3 feet and 8 feet bgs (Table 3-2).

During the Parcel UC3 TCRA, one section of pipe removed from trench segment 03-E16-00-1Y and Manholes MH508, MH509, and MH637 were removed from TU170 and placed on plastic pending further activities. The majority of the pipes excavated from TU170 disintegrated during removal and were transferred along with the surrounding soil to RSY2 for radiological processing. As indicated in Table 3-2, trench segments 03-E16-00-1Z, -2F, -2P, and -8I contained 14-inch-diameter to 18-inch-diameter concrete pipe located at depths between 3 feet and 7 feet bgs. Trench segment 03-E16-00-8K contained 6-inch-diameter VCP located at depths between 3 feet and 5 feet bgs. The remainder of the trench segments contained 4-inch-diameter CIP located between 2 feet and 4 feet bgs.

No sediment samples were collected from Manholes MH508, MH509, or MH637 due to an insufficient volume of available material. A sufficient volume of sediment for sample collection and analysis was found in one pipe section (sample 03-PEPI-0020-01) removed from trench segment 03-E16-00-1Y (Table 3-6). Although the laboratory analytical report did not identify the presence of radioactivity above the release criteria in the sediment sample for any ROC, this pipe section was crushed and the debris placed in LLRW bins GFLU001053G11 and GFLU001200G11 on May 3, 2010 for off-site disposal by the DON radiological waste contractor. The sediment sample laboratory analytical results are provided in Appendix C.

Radiological survey activities were not performed for any of the piping associated with TU170. At the direction of the DON, the materials forming the sidewalls of Manholes MH508, MH509, and MH637 were crushed and placed in LLRW bins to expedite completion of the main traffic corridor through HPNS. The final disposition of piping excavated from TU170 is identified in Tables 3-5 and 3-6.

A concrete swale associated with TU170 was identified during the storm drain and sanitary sewer excavation activities. The swale materials were removed from TU170 on June 7, 2010 and the concrete debris placed on plastic pending further activities. Radiological survey activities were performed for the swale debris on June 10 and July 13, 2010 (HPS-A-TU170-001 and -002). No radioactivity above the release criteria was associated with the survey results and the material was radiologically released as non-LLRW. The radiologically surveyed and

ED_006787_00017608-00076

released concrete debris was transferred to the DON non-LLRW waste contractor for off-site disposal or recycling. The survey reports are provided in Appendix I.

Three biased soil samples were collected from TU170 based on the results of surface scanning activities and submitted to the laboratory for analysis. The analytical results for one soil sample identified the presence of Ra-226 radioactivity above the release limit at 1.5028 pCi/g. Based on this result, an estimated 1.5 cubic yards of soil was removed from the vicinity of the contaminated sample point and placed in LLRW bin BKRU026440G11 for off-site disposal by the DON radiological waste contractor (Table 3-8). Following this remediation effort, three verification soil samples were collected on May 28, 2010 and analyzed by the laboratory. Due to the continued presence of Ra-226 contamination in two of the soil samples at 2.1485 pCi/g and 2.8570 pCi/g, an additional 1.5 cubic yards of soil was removed from TU170 on June 8, 2010. The contaminated soil was placed in LLRW bin BFLU000396G13 (Table 3-8). Three verification soil samples were collected following this remediation effort and submitted to the laboratory for analysis. The analytical results identified the continued presence of Ra-226 activity above the release limit in one soil sample at 2.0407 pCi/g.

Due to the continued presence of Ra-226 contamination in TU170, an estimated 258 cubic yards of soil was removed in June 2010 and transferred to RSY2 for radiological processing. On June 18, 2010, a portion of TU170 was reassigned to TU172 to facilitate the gas utility line reroute activities. Following this change, an additional 273 cubic yards of soil was removed from TU170 and transferred to RSY2 for processing. In RSY2, the soil removed from TU170 was assigned to excavated soil survey units ES-281 and ES-284 for radiological processing (Table 3-4). On June 23, 2010, three verification soil samples were collected from TU170 at the completion of the remediation activities. No radioactivity above the release criteria was identified in the verification soil sample laboratory analytical results.

In total, 12 investigative soil samples (including investigative and verification samples) were collected prior to the final 18 systematic FSS samples and roughly 534 cubic yards of soil was remediated from TU170 during the Parcel UC3 TCRA. Figure 5-2 depicts the approximate locations of the contaminated soil samples in TU170 prior to remediation.

5.1.2 TU170 Piping Remaining in Place

No known storm drain or sanitary sewer piping associated with TU170 remained in place on Parcel UC3 following completion of the TCRA activities.

5.1.3 TU170 FSS Summary

Eighteen systematic FSS soil samples were collected from the exposed sidewalls and bottom of excavated TU170 on June 25, 2010 and submitted to the laboratory for analysis. No radioactivity above the release criteria specified in the AM (DON 2006) was identified in the

FSS soil samples for any ROC. The release criteria are identified in Tables 2-1 and 2-2. Figure 5-1 depicts the FSS sample collection locations in TU170. The laboratory analytical reports were presented in Attachment 2 to the TU170 SUPR provided in Appendix G.

TU170 was defined for the FSS as the sum of the trench unit and the backfill material composed of a volume of imported fill. The average net residual radioactivity concentrations for material used as backfill in TU170 were 0.053 pCi/g for Cs-137, 0.070 pCi/g for Sr-90, and 0.373 pCi/g for Ra-226. The trench unit average net residual radioactivity concentrations were 0.038 pCi/g for Cs-137, 0.206 pCi/g for Sr-90, and 0.016 pCi/g for Ra-226. The activity used to model each radionuclide was based on the isotopic net concentration.

RESRAD modeling using the larger of the MDL or reported activity resulted in a net residual dose of 5.685 mrem/y with an increased cancer risk of 9.306×10^{-5} for the backfill material and 0.9309 mrem/y with an increased cancer risk of 1.293×10^{-5} for the trench unit. The modeling parameters and results were presented in Attachments 4 and 5 to the TU170 SUPR (Appendix G).

The results of the modeling efforts determined that the potential TU170 dose due to activity concentrations greater than or equal to the MDL was 5.685 mrem/y with an increased cancer risk of 9.306×10^{-5}, which supports radiological free release. No further radiological action was recommended in the TU170 SUPR (Appendix G).

5.1.4 TU170 Backfill Activities

Imported fill was selected as the appropriate backfill material for TU170 because there were no suitable radiologically processed and released excavated soil survey units available. The radiological and chemical analytical reports for the imported fill are provided in Appendix M.

The RASO concurred with backfilling TU170 on August 5, 2010 and backfilling operations commenced the same day. Approximately 481 cubic yards of soil was placed in TU170 to grade followed by the application of road base material over the backfilled trench. Backfill activities were performed in accordance with the HPNS Basewide Construction Specifications (TtEC 2009b). Backfilling activities were completed for TU170 on August 9, 2010. A summary of the activities performed to support the recommended radiological free release of TU170 is provided in Table 3-1.

5.2 TRENCH SURVEY UNIT 175

TU175 is located at the west end of Work Area 16 Central within Parcel UC3 and on the south side of Crisp Road (Figures 3-2 and 5-1). TU175 connects to TU182 on the north, TU176 on the west, TU170 and TU166 on the south, and TU181 (Work Area 16 West) on the west. There are no IR Program sites associated with TU175.

ED_006787_00017608-00078

TU175 consists of six storm drain trench segments and one sanitary sewer trench segment. As identified on Figure 5-1, these trench segments include:

Storm Drain Trench Segments

- 03-E16-00-2B
- 03-E16-00-2D
- 03-E16-00-2F
- 03-E16-00-2G
- 03-E16-00-8I
- 03-E16-00-8L

Sanitary Sewer Trench Segment

- 03-E16-00-2E

Trench segment 03-E16-00-2B continued toward the west and transitioned into TU181 (Work Area 16 West). Trench segments 03-E16-00-2D, -2E, and -8L extended toward the north and continued into TU182. Trench segment 03-E16-00-2E also continued south into TU166 (Work Area 16 West). Trench segments 03-E16-00-2F and -8I extended toward the south and transitioned into TU170 and -2G continued toward the east into TU176. With the exception of 03-E16-00-8I and -8L, each of the trench segments associated with TU175 was identified in the Design Plan presented in Attachment 2 to the Execution Plan (TtEC 2010a). Trench segments 03-E16-00-8I and -8L were found during excavation of Manhole MH515.

5.2.1 TU175 Removal Action Activities

Excavation activities commenced for TU175 on May 17, 2010 in trench segment 03-E16-00-2F. A total of 93 truckloads (approximately 1,116 cubic yards) of soil were excavated from TU175 during the TCRA activities (Table 3-3). Soil excavated from TU175 was radiologically processed in both RSY2 and RSY3 (Table 3-4). Following the completion of excavation on August 9, 2010, TU175 exhibited an exposed surface area of 908 m^2 and was 378 linear feet in length (Table 3-1). The maximum excavated TU175 depth ranged between 5 feet and 12 feet bgs (Table 3-2).

The TU175 pipes crumbled during removal and were transferred along with the surrounding excavated soil to RSY2 or RSY3 for radiological processing. As indicated in Table 3-2, trench segment 03-E16-00-2E contained 8-inch-diameter CIP located at 4 feet bgs. The remainder of the TU175 pipe was 14-inch-diameter and 24-inch-diameter concrete located at depths between 7 feet and 11 feet bgs.

Manhole MH515 was removed from TU175 on August 9, 2010 and placed on plastic pending further activities. As indicated in Table 3-6, a sufficient volume of sediment for sample collection and analysis was found in Manhole MH515 (sample 03-PEMH515-015-01).

No sediment samples were collected from any of the TU175 pipes due to an insufficient volume of available material. Although the laboratory analytical report did not identify the presence of radioactivity above the release criteria in the sediment sample for any ROC, the materials forming Manhole MH515 were crushed and the debris placed in LLRW bin BKRU026096G3 on August 12, 2010 for off-site disposal by the DON radiological waste contractor. The sediment sample laboratory analytical results are provided in Appendix C.

Radiological survey activities were not performed for any of the piping associated with TU175. Consequently, no survey results related to TU175 piping were available.

Eighteen systematic soil samples were collected from TU175 on August 18, 2010 and submitted to the laboratory for analysis. The analytical results for one soil sample identified the presence of Ra-226 activity above the release limit at 1.6068 pCi/g. Based on this result, and estimated 2 cubic yards of soil was removed from the vicinity of the contaminated sample and placed in LLRW bin MHFU001330G11 for off-site disposal by the DON radiological waste contractor (Table 3-8). Following this remediation effort, a total of three verification soil samples were collected on August 23, 2010 and analyzed by the laboratory. No radioactivity above the release criteria was identified in the verification soil sample laboratory analytical results.

In total, 21 investigative soil samples (including systematic and verification samples) were collected prior to the final 18 systematic FSS samples and an estimated 2 cubic yards of soil was remediated from TU175 during the Parcel UC3 TCRA activities. Figure 5-2 depicts the approximate locations of the contaminated soil samples in TU175 prior to remediation.

5.2.2 TU175 Piping Remaining in Place

No known storm drain or sanitary sewer piping associated with TU175 remained in place on Parcel UC3 following completion of the TCRA activities.

5.2.3 TU175 FSS Summary

On August 27, 2010, 18 systematic FSS soil samples were collected from the exposed sidewalls and bottom of excavated TU175 and submitted to the laboratory for analysis. No radioactivity above the release criteria specified in the AM (DON 2006) was identified in the FSS soil samples for any ROC. The release criteria are identified in Tables 2-1 and 2-2. Figure 5-1 depicts the FSS sample collection locations in TU175. The laboratory analytical reports were presented in Attachment 2 to the TU175 SUPR provided in Appendix G.

For the FSS, TU175 was defined as the sum of the trench unit and the backfill material composed of both radiologically processed and released excavated soil survey units and a volume of imported fill. The average net residual radioactivity concentrations for material used as backfill in TU175 were 0.048 pCi/g for Cs-137, 0.093 pCi/g for Sr-90, and 0.313 pCi/g for

ED_006787_00017608-00080

Ra-226. The trench unit average net residual radioactivity concentrations were 0.036 pCi/g for Cs-137, 0.206 pCi/g for Sr-90, and 0.050 pCi/g for Ra-226. The activity used to model each radionuclide was based on the isotopic net concentration.

RESRAD modeling using the larger of the MDL or reported activity resulted in a net residual dose of 5.505 mrem/y with an increased cancer risk of 8.755×10^{-5} for the backfill material and 1.638 mrem/y with an increased cancer risk of 2.379×10^{-5} for the trench unit. The modeling parameters and results were presented in Attachments 7 and 8 to the TU175 SUPR (Appendix G).

The results of the modeling efforts determined that the potential TU175 dose due to activity concentrations greater than or equal to the MDL was 5.505 mrem/y with an increased cancer risk of 8.755×10^{-5}, which supports radiological free release. No further radiological action was recommended in the TU175 SUPR (Appendix G).

5.2.4 TU175 Backfill Activities

Radiologically processed and released excavated soil survey units and a volume of imported fill were selected as the backfill material for TU175. The excavated soil survey units selected included:

- ES-319
- ES-320

Radiological information related to the processing of these excavated soil survey units is summarized in Table 3-4 and the associated laboratory analytical results were discussed in the TU175 SUPR (Appendix G). The radiological and chemical analytical reports for the imported fill are provided in Appendix M.

Concurrence to backfill TU175 was obtained from the RASO on November 17, 2010 and backfilling operations commenced the following day. Backfill activities were performed in accordance with the HPNS Basewide Construction Specifications (TtEC 2009b). Soil compaction testing was performed on January 19 and 20, 2011. At the completion of the backfilling activities on January 20, 2011, approximately 1,333 cubic yards of soil had been placed in TU175. Soil compaction and site restoration activities are described in Section 7.0 and the compaction test reports are provided in Appendix J. Table 3-1 summarizes the activities performed to support the recommended radiological free release of TU175.

5.3 TRENCH SURVEY UNIT 176

TU176 is located in the central portion Work Area 16 Central within Parcel UC3 along Crisp Road (Figures 3-2 and 5-1). TU176 connects to TU183 on the north and east, TU170 on the south, and TU175 on the west. There are no IR Program sites associated with TU176.

TU176 is composed of four storm drain trench segments and no sanitary sewer trench segments. As identified on Figure 5-1, these storm drain trench segments include:

- 03-E16-00-2G
- 03-E16-00-2O
- 03-E16-00-2V
- 03-E16-00-3A

Trench segment 03-E16-00-2G extended toward the east and continued into TU175. Trench segments 03-E16-00-2O and -3A transitioned into TU183 on the north and east. Each of the trench segments associated with TU176 was identified in the Design Plan presented in Attachment 2 to the Execution Plan (TtEC 2010a).

5.3.1 TU176 Removal Action Activities

Excavation activities were initiated for TU176 on August 9, 2010 in trench segment 03-E16-00-2G. A total of 76 truckloads (approximately 912 cubic yards) of soil were excavated from TU176 during the TCRA activities (Table 3-3). Soil excavated from TU176 was radiologically processed in RSY2 (Table 3-4). Following the completion of excavation on August 11, 2010, TU176 had an exposed surface area of 913 m^2 and was 335 linear feet in length (Table 3-1). The maximum excavated TU176 depth ranged between 11 feet and 12 feet bgs (Table 3-2).

The TU176 pipes disintegrated during removal and were transferred along with the surrounding excavated soil to RSY2 for radiological processing. As indicated in Table 3-2, trench segments 03-E16-00-2G and -3A contained 24-inch-diameter concrete pipe and -2O and -2V contained 14-inch-diameter concrete pipe. The pipes associated with TU176 were found at depths between 9 feet and 11 feet bgs.

No sediment samples were collected from any of the TU176 pipes due to an insufficient volume of available material. Manhole MH523 was removed from TU176 on August 10, 2010 and placed on plastic pending further activities. As indicated in Table 3-6, a sufficient volume of sediment for sample collection and analysis was found in Manhole MH523 (sample 03-PEMH523-016-01). Although the laboratory analytical results did not identify the presence of radioactivity above the release criteria in the sediment sample for any ROC, the materials forming Manhole MH523 were crushed and the debris placed in LLRW bins BKRU025997G12

ED_006787_00017608-00082

and BKRU026096G3 on August 12, 2010 for off-site disposal by the DON radiological waste contractor. The sediment sample laboratory analytical results are provided in Appendix C.

Radiological survey activities were not performed for any of the piping associated with TU176. Consequently, no survey results related to this trench survey unit were available.

5.3.2 TU176 Piping Remaining in Place

No known storm drain or sanitary sewer piping associated with TU176 remained in place on Parcel UC3 following completion of the TCRA activities.

5.3.3 TU176 FSS Summary

A total of 18 systematic FSS soil samples were collected from the exposed sidewalls and bottom of excavated TU176 on August 19, 2010 and submitted to the laboratory for analysis. No radioactivity above the release criteria specified in the AM (DON 2006) was identified in the FSS soil samples for any ROC. The release criteria are identified in Tables 2-1 and 2-2. Figure 5-1 depicts the FSS sample collection locations in TU176. The laboratory analytical reports were presented in Attachment 2 to the TU176 SUPR provided in Appendix G.

TU176 was defined for the FSS as the sum of the trench unit and the backfill material composed of both radiologically processed and released excavated soil survey units and a volume of imported fill. The average net residual radioactivity concentrations for material used as backfill in TU176 were 0.050 pCi/g for Cs-137, 0.104 pCi/g for Sr-90, and 0.340 pCi/g for Ra-226. The trench unit average net residual radioactivity concentrations were 0.036 pCi/g for Cs-137, 0.177 pCi/g for Sr-90, and -0.020 pCi/g for Ra-226. The activity used to model each radionuclide was based on the isotopic net concentration.

RESRAD modeling using the larger of the MDL or reported activity resulted in a net residual dose of 6.008 mrem/y with an increased cancer risk of 9.545×10^{-5} for the backfill material and 0.7256 mrem/y with an increased cancer risk of 9.434×10^{-6} for the trench unit. The modeling parameters and results were presented in Attachments 7 and 8 to the TU176 SUPR (Appendix G).

The results of the modeling efforts determined that the potential TU176 dose due to activity concentrations greater than or equal to the MDL was 6.008 mrem/y with an increased cancer risk of 9.545×10^{-5}, which supports radiological free release. No further radiological action was recommended in the TU176 SUPR (Appendix G).

5.3.4 TU176 Backfill Activities

Radiologically processed and released excavated soil survey units and a volume of imported fill were selected as the backfill materials for TU176. The excavated soil survey units selected included:

- ES-281
- ES-285
- ES-300

Radiological information related to the processing of these excavated soil survey units is summarized in Table 3-4 and the associated laboratory analytical results were discussed in the TU176 SUPR (Appendix G). The radiological and chemical analytical reports for the imported fill are provided in Appendix M.

The RASO concurred with backfilling TU176 on November 9, 2010 and backfill activities were initiated on November 17, 2010. Backfill activities were performed in accordance with the HPNS Basewide Construction Specifications (TtEC 2009b). Soil compaction testing was performed on January 22, 24, and 25, 2011. At the completion of backfilling activities on January 25, 2011, approximately 1,295 cubic yards of soil had been placed in TU176. Soil compaction and site restoration activities are described in Section 7.0 and the compaction test reports are provided in Appendix J. Table 3-1 summarizes the activities performed to support the recommended radiological free release of TU176.

5.4 TRENCH SURVEY UNIT 182

TU182 is located at the west end of Work Area 16 Central within Parcel UC3 on the north side of Crisp Road (Figures 3-2 and 5-1). TU182 connects to TU173 and TU181 (Work Area 16 West) on the west, TU183 on the east, and TU175 on the south. There are no IR Program sites associated with TU182.

TU182 is composed of three storm drain trench segments and five sanitary sewer trench segments. As identified on Figure 5-1, these trench segments include:

<u>Storm Drain Trench Segments</u>

- 03-E16-00-2D
- 03-E16-00-8L
- 03-E16-00-8P

<u>Sanitary Sewer Trench Segments</u>

- 03-E16-00-1H
- 03-E16-00-2A
- 03-E16-00-2C
- 03-E16-00-2E
- 03-E16-00-8M

Trench segments 03-E16-00-1H and -8M extended from TU181 on the west, through TU182, and then transitioned into TU183 on the east. Trench segment 03-E16-00-2A extended toward the west into TU173. Trench segment 03-E16-00-2C continued into TU183 on the east and -2D, -2E, and -8L extended toward the south and transitioned into TU175. The majority of the TU182 trench segments were identified in the Design Plan presented in Attachment 2 to the Execution Plan (TtEC 2010a). Trench segments 03-E16-00-8L, -8M, and -8P were found during excavation of Manholes MH514, MH639, and MH640.

5.4.1 TU182 Removal Action Activities

Excavation activities were initiated for TU182 on April 2, 2010 in trench segment 03-E16-00-2E. A total of 85 truckloads (approximately 1,020 cubic yards) of soil were excavated from TU182 during the TCRA activities (Table 3-3). Soil excavated from TU182 was radiologically processed in RSY2 (Table 3-4). Following the completion of excavation on August 30, 2010, TU182 exhibited an exposed surface area of 929 m^2 and was 504 linear feet in length (Table 3-1). The maximum excavated TU182 depth ranged between 4 feet and 12 feet bgs (Table 3-2).

During the Parcel UC3 TCRA, 65 sections of pipe and Manholes MH514, MH639, and MH640 were removed from TU182 and placed on plastic pending further activities. Pipes that crumbled during removal were transferred along with the surrounding excavated soil to RSY2 for radiological processing. As indicated in Table 3-2, trench segments 03-E16-00-1H, -2D, and -8L contained 14-inch-diameter and 24-inch-diameter concrete pipe. Trench segments 03-E16-00-2A, -2C and -8P contained 6-inch-diameter VCP. In addition, trench segment 03-E16-00-2E contained 8-inch diameter CIP and -8M contained 16-inch-diameter DIP. The TU182 pipes were found at depths ranging from 2 feet to 12 feet bgs.

An insufficient volume of sediment was available in the piping removed from TU182 for sample collection and analysis. Consequently, no sediment sample analytical results are associated with this trench survey unit.

Radiological survey activities were performed for 65 sections of pipe removed from trench segments 03-E16-00-1H and -8M (Table 3-5). Elevated results were not identified for any of the TU182 pipes surveyed. Each of the surveyed and released pipe sections associated with TU182 was either placed in containers for metals recycling or were transferred to the DON non-LLRW waste contractor for off-site disposal or recycling. The radiological survey reports are provided in Appendix B.

No radiological surveys were performed for Manholes MH514, MH639, or MH640 during the Parcel UC3 TCRA activities. At the direction of the DON, the materials forming the walls of these manholes were crushed and placed in LLRW bin DB1149D4 on August 30, 2010 to

expedite completion of the main traffic corridor through HPNS. Table 3-5 identifies the disposition of each of the TU182 pipes and manholes.

5.4.2 TU182 Piping Remaining in Place

No known storm drain or sanitary sewer piping associated with TU182 remained in place on Parcel UC3 following completion of the TCRA activities.

5.4.3 TU182 FSS Summary

Eighteen systematic soil samples were collected from the exposed sidewalls and bottom of excavated TU182 on August 9, 2010 and submitted to the laboratory for analysis. No radioactivity above the release criteria specified in the AM (DON 2006) was identified in the FSS soil samples for any ROC. The release criteria are identified in Tables 2-1 and 2-2. Figure 5-1 depicts the FSS sample collection locations in TU182. The laboratory analytical reports were presented in Attachment 2 to the TU182 SUPR provided in Appendix G.

TU182 was defined for the FSS as the sum of the trench unit and the backfill material composed of both a radiologically processed and released excavated soil survey unit and a volume of imported fill. The average net residual radioactivity concentrations for material used as backfill in TU182 were 0.051 pCi/g for Cs-137, 0.089 pCi/g for Sr-90, and 0.344 pCi/g for Ra-226. The trench unit average net residual radioactivity concentrations were 0.035 pCi/g for Cs-137, 0.173 pCi/g for Sr-90, and 0.121 pCi/g for Ra-226. The activity used to model each radionuclide was based on the isotopic net concentration.

RESRAD modeling using the larger of the MDL or reported activity resulted in a net residual dose of 6.088 mrem/y with an increased cancer risk of 9.672×10^{-5} for the backfill material and 2.709 mrem/y with an increased cancer risk of 4.131×10^{-5} for the trench unit. The modeling parameters and results were presented in Attachments 7 and 8 to the TU182 SUPR (Appendix G).

The results of the modeling efforts determined that the potential TU182 dose due to activity concentrations greater than or equal to the MDL was 6.088 mrem/y with an increased cancer risk of 9.672×10^{-5}, which supports radiological free release. No further radiological action was recommended in the TU182 SUPR (Appendix G).

5.4.4 TU182 Backfill Activities

Radiologically processed and released excavated soil survey unit ES-323 and a volume of imported fill were selected as the backfill materials for TU182. Radiological information related to the processing of ES-323 is summarized in Table 3-4 and the associated laboratory analytical

results were discussed in the TU182 SUPR (Appendix G). The radiological and chemical analytical reports for the imported fill are provided in Appendix M.

Concurrence to backfill TU182 was obtained from the RASO on November 22, 2010 and backfill operations were initiated on December 1, 2010. Backfill activities were performed in accordance with the HPNS Basewide Construction Specifications (TtEC 2009b). Soil compaction testing was performed on January 20 and 21, 2011. At the completion of backfilling activities on January 21, 2011, approximately 1,173 cubic yards of soil had been placed in TU182. Soil compaction and site restoration activities are described in Section 7.0 and the compaction test reports are provided in Appendix J. Table 3-1 summarizes the activities performed to support the recommended radiological free release of TU182.

5.5 TRENCH SURVEY UNIT 183

TU183 is located at the east end of Work Area 16 Central within Parcel UC3 on the north side of Crisp Road (Figures 3-2 and 5-1). TU183 connects to TU182 on the west, TU184 (Work Area 16 East) on the east, and TU166 (Work Area 16 West) and TU176 on the south. Several TU183 trench segments are situated within IR Program Site IR-74. The chemicals of concern associated with IR-74 are listed in Table 3-9.

TU183 consists of seven storm drain trench segments and eight sanitary sewer trench segments. As identified on Figure 5-1, these trench segments include:

Storm Drain Trench Segments	Sanitary Sewer Trench Segments
• 03-E16-00-2N	• 03-E16-00-1H
• 03-E16-00-2O	• 03-E16-00-2C
• 03-E16-00-2T	• 03-E16-00-2S
• 03-E16-00-3A	• 03-E16-00-3B
• 03-E16-74-2J	• 03-E16-00-3D
• 03-E16-74-2L	• 03-E16-00-8M
• 03-E16-74-2M	• 03-E16-74-2Q
	• 03-E16-74-2S

Trench segment 03-E16-00-1H extended from TU182 on the west, through TU183, and then continued into TU184 (Work Area 16 East). Trench segments 03-E16-00-2C and -8M extended from TU182 toward the east and transitioned into TU183. Trench segments 03-E16-00-2O and -3A continued south into TU176 and -2T extended toward the south into TU166 (Work Area 16 West). Trench segments 03-E16-00-3A and -3D transitioned into TU184. The majority of the TU183 trench segments were identified in the Design Plan presented in Attachment 2 to the

Execution Plan (TtEC 2010a). Trench segment 03-E16-00-8M was found during the excavation of Manhole MH641 and trench segment 03-E16-00-1H.

5.5.1 TU183 Removal Action Activities

Excavation activities were initiated for TU183 on April 1, 2010 in trench segment 03-E16-00-2T. A total of 89 truckloads (approximately 1,068 cubic yards) of soil were excavated from TU183 during the TCRA activities (Table 3-3). Soil excavated from TU183 was radiologically processed in both RSY2 and RSY3 (Table 3-4). Following the completion of excavation on September 1, 2010, TU183 had an exposed surface area of 891 m^2 and was 425 linear feet in length (Table 3-1). The maximum excavated TU183 depth ranged between 3 feet and 12 feet bgs (Table 3-2).

During the Parcel UC3 TCRA, 20 sections of pipe and Manholes MH520, MH521, MH522, MH525, MH526, and MH641 were removed from TU183 and placed on plastic pending further activities. Pipes that disintegrated during removal were transferred along with the surrounding excavated soil to RSY2 and RSY3 for radiological processing. As indicated in Table 3-2, trench segments 03-E16-00-1H and -3A contained 24-inch-diameter concrete pipe. Trench segments 03-E16-00-2O and 03-E16-74-2M contained 14-inch-diameter concrete pipe. In addition, trench segment 03-E16-00-8M contained 16-inch-diameter DIP and 03-E16-74-2L contained 4-inch-diameter CIP. The remaining trench segments associated with TU183 contained 6-inch-diameter and 8-inch-diameter VCP. The TU183 pipes were found at depths between 3 feet and 10 feet bgs.

An insufficient volume of sediment was available in the piping removed from TU183 for sample collection and analysis. Consequently, no sediment sample analytical results are associated with this trench survey unit.

Radiological survey activities were performed for 20 sections of pipe removed from trench segment 03-E16-00-1H (Table 3-5). Elevated results were not identified for any of the TU183 pipes surveyed. Each of the surveyed and released pipe sections associated with TU183 was transferred to the DON non-LLRW waste contractor for off-site disposal or recycling. The radiological survey reports are provided in Appendix B.

No radiological surveys were performed for Manholes MH520, MH521, MH522, MH525, MH526, or MH641 during the Parcel UC3 TCRA activities. At the direction of the DON, the materials forming the walls of these manholes were crushed and the debris placed in LLRW bins in August 2010 to expedite completion of the main traffic corridor through HPNS. Table 3-5 identifies the disposition of the TU183 pipes and manholes.

5.5.2 TU183 Piping Remaining in Place

No known storm drain or sanitary sewer piping associated with TU183 remained in place on Parcel UC3 following completion of the TCRA activities.

5.5.3 TU183 FSS Summary

On September 14, 2010, 18 systematic FSS soil samples were collected from the exposed sidewalls and bottom of excavated TU183 and submitted to the laboratory for analysis. No radioactivity above the release criteria specified in the AM (DON 2006) was identified in the FSS soil samples for any ROC. The release criteria are identified in Tables 2-1 and 2-2. Figure 5-1 depicts the FSS sample collection locations in TU183. The laboratory analytical reports were presented in Attachment 2 to the TU183 SUPR provided in Appendix G.

For the FSS, TU183 was defined as the sum of the trench unit and the backfill material composed of both radiologically processed and released excavated soil survey units and a volume of imported fill. The average net residual radioactivity concentrations for material used as backfill in TU183 were 0.049 pCi/g for Cs-137, 0.103 pCi/g for Sr-90, and 0.312 pCi/g for Ra-226. The trench unit average net residual radioactivity concentrations were 0.049 pCi/g for Cs-137, 0.186 pCi/g for Sr-90, and 0.062 pCi/g for Ra-226. The activity used to model each radionuclide was based on the isotopic net concentration.

RESRAD modeling using the larger of the MDL or reported activity resulted in a net residual dose of 5.459 mrem/y with an increased cancer risk of 8.691×10^{-5} for the backfill material and 1.76 mrem/y with an increased cancer risk of 2.608×10^{-5} for the trench unit. The modeling parameters and results were presented in Attachments 7 and 8 to the TU183 SUPR (Appendix G).

The results of the modeling efforts determined that the potential TU183 dose due to activity concentrations greater than or equal to the MDL was 5.459 mrem/y with an increased cancer risk of 8.691×10^{-5}, which supports radiological free release. No further radiological action was recommended in the TU183 SUPR (Appendix G).

5.5.4 TU183 Backfill Activities

Radiologically processed and released excavated soil survey units and a volume of imported fill were selected as the backfill material for TU183. The excavated soil survey units selected included:

- ES-288
- ES-303

Radiological information related to the processing of these excavated soil survey units is summarized in Table 3-4 and the associated laboratory analytical results were discussed in the TU183 SUPR (Appendix G). The radiological and chemical analytical reports for the imported fill are provided in Appendix M.

The RASO concurred with backfilling TU183 on November 24, 2010 and backfill operations commenced on November 30, 2010. Backfill activities were performed in accordance with the HPNS Basewide Construction Specifications (TtEC 2009b). Soil compaction testing was performed on January 21, 22, and 25, 2011. At the completion of backfill operations on January 25, 2011, approximately 1,394 cubic yards of soil had been placed in TU183. Soil compaction and site restoration activities are described in Section 7.0 and the compaction test reports are provided in Appendix J. Table 3-1 summarizes the activities performed to support the recommended radiological free release of TU183.

ED_006787_00017608-00090

6.0 WORK AREA 16 EAST

Work Area 16 East is located at the east end of Crisp Road within the eastern portion of Parcel UC3 (Figures 1-2, 3-2, and 6-1). It is bounded on the north by the SFRA property (formerly Parcel A), on the east by Parcel UC1, on the south by Parcel E, and on the west by Work Area 16 Central. The radiological work activities performed in Work Area 16 East included TU169, TU174, TU184, TU185, and TU187 through TU190. The following sections summarize the work activities completed in Work Area 16 East to support the recommended radiological release for unrestricted use of the Parcel UC3 property.

6.1 TRENCH SURVEY UNIT 169

TU169 is located is located at the east end of Work Area 16 East within Parcel UC3 along the south side of Crisp Road (Figures 3-2 and 6-1). TU169 connects to TU170 (Work Area 16 Central) on the east, TU166 (Work Area 16 West) on the south, TU184 on the north and south, TU187 on the north, and TU188 on the north, east, and south. At its east end, two sections of TU169 were physically separated by a short road to preserve construction access to Crisp Road. Subsequently, this short road segment was excavated and designated as TU190. TU190 is discussed in Section 6.8. There are no IR Program sites associated with TU169.

TU169 is composed of seven storm drain trench segments and no sanitary sewer trench segments. As identified on Figure 6-1, these storm drain trench segments include:

- 03-E16-00-1K
- 03-E16-00-3I
- 03-E16-00-3J
- 03-E16-00-3M
- 03-E16-00-3N
- 03-E16-00-8B
- 03-E16-00-8C

Trench segments 03-E16-00-1K, -8C, and -8I extended toward the west and transitioned into TU170 (Work Area 16 Central). Trench segment 03-E16-00-3J extended toward the south and north into TU166 and TU187. Trench segments 03-E16-00-3N and -8B extended through TU190 and -3M transitioned into TU188. With the exception of 03-E16-00-8B and -8C, each of the trench segments associated with TU169 was identified in the Design Plan presented in Attachment 2 to the Execution Plan (TtEC 2010a). Trench segments 03-E16-00-8B and -8C were found during excavation of Manholes MH543 and MH636.

6.1.1 TU169 Removal Action Activities

Excavation activities for TU169 were initiated on April 22, 2010 in trench segment 03-E16-00-3N. A total of 61 truckloads (approximately 732 cubic yards) of soil were excavated from

ED_006787_00017608-00091

TU169 during the TCRA activities (Table 3-3). Soil excavated from TU169 was radiologically processed in RSY2 (Table 3-4). Following the completion of excavation and remediation on June 28, 2010, TU169 had an exposed surface area of 973 m^2 and was 962 linear feet in length (Table 3-1). The maximum excavated TU169 depth ranged between 2 feet and 11 feet bgs (Table 3-2).

During the Parcel UC3 TCRA, two sections of pipe and Manholes MH543 and MH636 were removed from TU169 and placed on plastic pending further activities. The majority of the pipes excavated from TU169 disintegrated during removal and were transferred along with the surrounding soil to RSY2 for radiological processing. As indicated in Table 3-2, trench segments 03-E16-00-3I and -3J contained 16-inch-diameter concrete pipe located at 9 feet bgs. The remainder of the TU169 trench segments contained 4-inch-diameter CIP found at depths between 2 feet and 4 feet bgs.

A sufficient volume of sediment for sample collection and analysis was found in one pipe section removed from trench segment 03-E16-00-1K (sample 03-PEPI-0019-01) and one pipe section excavated from trench segment 03-E16-00-3N (sample 03-PEPI-0018-01) (Table 3-6). In addition, a sufficient volume of sediment for sample collection was found in Manholes MH543 (sample 03-PEMH543-013-01) and MH636 (sample 03-PEMH636-014-01). The laboratory analytical results did not identify the presence of radioactivity above the release criteria for any ROC in the sediment sample collected from the trench segment 03-E16-00-3N CIP. The analytical results did identify the presence of Cs-137 contamination in the pipe removed from trench segment 03-E16-00-1K at 0.12991 pCi/g and in Manholes MH543 and MH636 at 0.33662 pCi/g and 0.20938 pCi/g, respectively. Both of these pipes and the two manholes were placed in LLRW bins for off-site disposal by the DON radiological waste contractor. The sediment sample laboratory analytical results are provided in Appendix C.

Radiological survey activities were not performed for any of the piping associated with TU169. Consequently, no survey results are associated with this trench survey unit. The final disposition of piping excavated from TU169 is identified in Table 3-6.

A concrete swale associated with TU169 was identified during the storm drain and sanitary sewer excavation activities. The swale materials were removed from TU169 on June 7, 2010 and the concrete debris placed on plastic pending further activities. Radiological survey activities were performed for the swale debris on June 9, 2010 (HPS-A-TU169-001). No radioactivity above the release criteria was associated with the survey results and the material was released as non-LLRW. The radiologically surveyed and released concrete swale debris was transferred to the DON non-LLRW waste contractor for off-site disposal or recycling. The survey reports are provided in Appendix I.

Due to the presence of Cs-137 contamination in the sediment samples collected from pipe excavated from trench segment 03-E16-00-1K and Manholes MH543 and MH636, five investigative soil samples were collected from TU169 in the general vicinity of the pipe section and the two manholes containing contaminated sediments on May 24, 2010 and submitted to the laboratory for analysis. The analytical results identified the presence of Ra-226 activity above the release limit in one sample at 1.7723 pCi/g. Based on this result, an estimated 1.5 cubic yards of soil was removed from TU169 on June 1, 2010. The remediated soil was placed in LLRW bin BKRU026440G11 (Table 3-8). Three verification soil samples were collected and submitted to the laboratory for analysis following the remediation efforts. No radioactivity above the release criteria was identified in the three verification soil samples for any ROC.

Eighteen systematic soil samples were collected from the sidewalls and bottom of TU169 on June 4, 2010 and submitted to the laboratory for analysis. The analytical results identified the presence of Ra-226 activity above the release limit in 12 soil samples ranging from 1.5023 pCi/g to 4.1008 pCi/g, and Cs-137 contamination in two soil samples at 0.12702 pCi/g and 0.17749 pCi/g. Based on these results, an estimated 552 cubic yards of soil was excavated from TU169 and transferred to RSY2 for radiological processing (Table 3-8). Table 3-4 summarizes the radiological processing activities and results. Following the mass remediation activities, 33 verification soil samples were collected on June 28, 2010 and analyzed by the laboratory. The analytical results did not identify the presence of contamination above the release criteria.

On July 1, 2010, 18 systematic soil samples were collected from the sidewalls and bottom of TU169 and submitted to the laboratory for analysis. The analytical results identified the presence of Cs-137 contamination in one soil sample at 0.12591 pCi/g. Approximately 0.5 cubic yards of soil was remediated from the area around the contaminated sample (Table 3-8). The contaminated soil was placed in LLRW bin BKRU026468G9 for off-site disposal by the DON radiological waste contractor. Following the remediation efforts, three verification soil samples were collected on July 8, 2010, and analyzed by the laboratory. No radioactivity above the release criteria was identified in the verification soil samples for any ROC.

In total, 80 investigative soil samples (including investigative, systematic, and verification samples) were collected prior to the final 18 systematic FSS samples and an estimated 554 cubic yards of soil was remediated from TU169 during the Parcel UC3 TCRA. Figure 6-2 depicts the approximate locations of the TU169 contaminated soil samples prior to remediation.

6.1.2 TU169 Piping Remaining in Place

No known storm drain or sanitary sewer piping associated with TU169 remained in place on Parcel UC3 following completion of the TCRA activities.

6.1.3 TU169 FSS Summary

Eighteen systematic FSS soil samples were collected from the exposed sidewalls and bottom of excavated TU169 on July 12, 2010 and submitted to the laboratory for analysis. No radioactivity above the release criteria specified in the AM (DON 2006) was identified in the FSS soil samples for any ROC. The release criteria are identified in Tables 2-1 and 2-2. Figure 6-1 depicts the FSS sample collection locations in TU169. The laboratory analytical reports were presented in Attachment 2 to the TU169 SUPR provided in Appendix H.

TU169 was defined for the FSS as the sum of the trench unit and the backfill material composed of both a radiologically processed and released excavated soil survey unit and a volume of imported fill. The average net residual radioactivity concentrations for material used as backfill in TU169 were 0.050 pCi/g for Cs-137, 0.128 pCi/g for Sr-90, and 0.285 pCi/g for Ra-226. The trench unit average net residual radioactivity concentrations were 0.033 pCi/g for Cs-137, 0.208 pCi/g for Sr-90, and 0.034 pCi/g for Ra-226. The activity used to model each radionuclide was based on the isotopic net concentration.

RESRAD modeling using the larger of the MDL or reported activity resulted in a net residual dose of 5.43 mrem/y with an increased cancer risk of 8.510×10^{-5} for the backfill material and 1.461 mrem/y with an increased cancer risk of 2.063×10^{-5} for the trench unit. The modeling parameters and results were presented in Attachments 7 and 8 to the TU169 SUPR (Appendix H).

The results of the modeling efforts determined that the potential TU169 dose due to activity concentrations greater than or equal to the MDL was 5.43 mrem/y with an increased cancer risk of 8.510×10^{-5}, which supports radiological free release. No further radiological action was recommended in the TU169 SUPR (Appendix H).

6.1.4 TU169 Backfill Activities

Radiologically processed and released excavated soil survey unit ES-271 and a volume of imported fill were selected as the backfill materials for TU169. Radiological information related to the processing of ES-271 is summarized in Table 3-4 and the associated laboratory analytical results were discussed in the TU169 SUPR (Appendix H). The radiological and chemical analytical reports for the imported fill are provided in Appendix M.

The RASO concurred with backfilling TU169 on August 4, 2010 and backfilling operations commenced the following day. Approximately 560 cubic yards of soil was placed in TU169 to grade followed by the application of road base material over the backfilled trench. Backfill operations were performed in accordance with the HPNS Basewide Construction Specifications (TtEC 2009b). Backfilling operations were completed on August 10, 2010. A summary of the

ED_006787_00017608-00094

activities performed to support the recommended radiological free release of TU169 is provided in Table 3-1.

6.2 TRENCH SURVEY UNIT 174

TU174 is located at the west end of Work Area 16 East within Parcel UC3 along the north side of Crisp Road and immediately south of non-radiologically impacted Building 815 (Figures 3-2 and 6-1). TU174 connects to TU187 on the east and south, TU184 on the south, and terminates on the west at Manhole MH528. No additional pipe was found to the west of Manhole MH528. The majority of TU174 is situated within IR Program Site IR-74. The chemicals of concern associated with IR-74 are listed in Table 3-9.

TU174 is composed of six storm drain trench segments and one sanitary sewer trench segment. As identified on Figure 6-1, these trench segments include:

Storm Drain Trench Segments

- 03-E16-00-3L
- 03-E16-74-1A
- 03-E16-74-2R
- 03-E16-74-3C
- 03-E16-74-3J
- 03-E16-74-8A

Sanitary Sewer Trench Segment

- 03-E16-74-3G

Trench segment 03-E16-00-3L continued toward the east and transitioned into TU187 and trench segment 03-E16-74-3C extended toward the south into TU184. With the exception of 03-E16-74-8A, each of the trench segments associated with TU174 was identified in the Design Plan presented in Attachment 2 to the Execution Plan (TtEC 2010a). Trench segment 03-E16-74-8A was found during excavation of Manhole MH638.

6.2.1 TU174 Removal Action Activities

Excavation activities were initiated for TU174 on August 3, 2010 in trench segment 03-E16-74-3J. A total of 37 truckloads (approximately 444 cubic yards) of soil were excavated from TU174 and transferred to RSY3 (Table 3-4). Following the completion of excavation on August 4, 2010, TU174 had an exposed surface area of 472 m^2 and was 376 linear feet in length (Table 3-1). The maximum excavated TU174 depth ranged between 4 feet and 9 feet bgs (Table 3-2).

The TU174 pipes disintegrated during removal and were transferred along with the surrounding excavated soil to RSY3 for radiological processing. As indicated in Table 3-2, trench segments 03-E16-74-1A and -2R contained 15-inch-diameter VCP located at depths from 4 feet to 6 feet

ED_006787_00017608-00095

bgs. Trench segment 03-E16-74-3G contained 4-inch-diameter CIP located at 3 feet bgs. The remainder of the trench segments contained 15-inch-diameter concrete pipe located at depths ranging from 5 feet to 7 feet bgs.

Manholes MH528 and MH638 were removed from TU174 on August 4, 2010 and placed on plastic pending further activities. An insufficient volume of sediment was found in these manholes for sample collection and analysis. Consequently, no sediment sample analytical results are associated with TU174. At the direction of the DON, the materials forming the walls of manholes MH528 and MH638 were crushed and the debris placed in LLRW bins for off-site disposal by the DON radiological waste contractor to expedite the completion of the main HPNS traffic corridor. The disposition of the TU174 manholes is provided in Table 3-5.

6.2.2 TU174 Piping Remaining in Place

During the Parcel UC3 TCRA, 94 linear feet of trench segment 03-E16-74-3J was removed. A total of 4 linear feet of storm drain pipe from this trench segment was left in place following the completion of the removal action to avoid adversely affecting the active utility corridor associated with Building 815 located on the SFRA property to the north (Table 3-7).

Radiological survey activities were performed for the trench segment 03-E16-74-3J pipe remaining in place on August 12, 2010 (survey number HPS-PEPIPE-081210-004). The survey activities consisted of manual gamma scans, static measurements, and the collection of swipe samples. The survey results did not identify the presence of either fixed or removable radioactivity above the release criteria. The radiological survey results for the pipe remaining in place are provided in Appendix B.

The DON concluded that the TU174 pipe remaining in place was unlikely to be contaminated. This conclusion was based on the removal of 94 linear feet of trench segment 03-E16-74-3J, radiological survey results for the pipe left in place, and the 18 FSS soil samples collected from the excavated trench sidewalls and bottom.

6.2.3 TU174 FSS Summary

The 18 systematic FSS soil samples were collected from the sidewalls and bottom of excavated TU174 and submitted to the laboratory for analysis on August 17, 2010. No radioactivity above the release criteria specified in the AM (DON 2006) was identified in the FSS soil samples for any ROC. The release criteria are identified in Tables 2-1 and 2-2. Figure 6-1 depicts the FSS sample collection locations in TU174. The laboratory analytical reports were presented in Attachment 2 to the TU174 SUPR provided in Appendix H.

For the FSS, TU174 was defined as the sum of the trench unit and the backfill material composed of both radiologically processed and released excavated soil survey units and a

volume of imported fill. The average net residual radioactivity concentrations for material used as backfill in TU174 were 0.040 pCi/g for Cs-137, 0.129 pCi/g for Sr-90, and 0.222 pCi/g for Ra-226. The trench unit average net residual radioactivity concentrations were 0.042 pCi/g for Cs-137, 0.153 pCi/g for Sr-90, and 0.015 pCi/g for Ra-226. The activity used to model each radionuclide was based on the isotopic net concentration.

RESRAD modeling using the larger of the MDL or reported activity resulted in a net residual dose of 2.803 mrem/y with an increased cancer risk of 4.787×10^{-5} for the backfill material and 0.5389 mrem/y with an increased cancer risk of 7.922×10^{-6} for the trench unit. The modeling parameters and results were presented in Attachments 7 and 8 to the TU174 SUPR (Appendix H).

The results of the modeling efforts determined that the potential TU174 dose due to activity concentrations greater than or equal to the MDL was 2.803 mrem/y with an increased cancer risk of 4.787×10^{-5}, which supports radiological free release. No further radiological action was recommended in the TU174 SUPR (Appendix H).

6.2.4 TU174 Backfill Activities

Radiologically processed and released excavated soil survey units and a volume of imported fill were selected as the backfill materials for TU174. The excavated soil survey units selected included:

- ES-294
- ES-295

Radiological information related to the processing of these excavated soil survey units is summarized in Table 3-4 and the associated laboratory analytical results were discussed in the TU174 SUPR (Appendix H). The radiological and chemical analytical reports for the imported fill are provided in Appendix M.

Concurrence to backfill TU174 was obtained from the RASO on November 3, 2010. Backfill activities were initiated on November 13, 2010 and completed on December 2, 2010. Approximately 375 cubic yards of soil was placed in TU174 to grade followed by the application of road base material over the backfilled trench. Backfill activities were performed in accordance with the HPNS Basewide Construction Specifications (TtEC 2009b). A summary of the activities performed to support the recommended radiological free release of TU174 is provided in Table 3-1.

6.3 TRENCH SURVEY UNIT 184

TU184 is located at the west end of Work Area 16 East within Parcel UC3 along Crisp Road (Figures 3-2 and 6-1). This trench unit is physically separated into two sections. The north section of TU184 connects to TU174 on the north, TU183 (Work Area 16 Central) on the west, and TU187 on the east and south. The southern section of TU184 connects to TU183 (Work Area 16 Central) on the west and terminates at Manhole MH529 on the east. On the south, the south section of TU184 was terminated within Parcel E to complete removal of a concrete pipe grouted into a steel jacket. Small segments of TU184 are situated within IR Program Sites IR-56 and IR-74. The chemicals of concern associated with IR-56 and IR-74 are listed in Table 3-9.

TU184 consists of six storm drain trench segments and four sanitary sewer trench segments. As identified on Figure 6-1, these trench segments include:

Storm Drain Trench Segments	Sanitary Sewer Trench Segments
• 03-E16-00-2U	• 03-E16-00-1H
• 03-E16-00-3A	• 03-E16-00-3D
• 03-E16-00-3I	• 03-E16-00-3E
• 03-E16-56-2U	• 03-E16-00-3H
• 03-E16-74-3C	
• 03-E16-74-3F	

Trench segment 03-E16-00-1H continued into TU183 on the west and transitioned into TU187 on the east. Trench segments 03-E16-00-3A and -3D extended toward the west into TU183. Trench segments 03-E16-00-3E and -3I transitioned into TU187 and trench segment 03-E16-74-3C continued into TU174. Each of the trench segments associated with TU184 was identified in the Design Plan presented in Attachment 2 to the Execution Plan (TtEC 2010a).

6.3.1 TU184 Removal Action Activities

Excavation activities were initiated for TU184 on April 5, 2010 in trench segment 03-E16-56-2U. A total of 116 truckloads (approximately 1,392 cubic yards) of soil were excavated from TU184 during the TCRA activities (Table 3-3). Soil excavated from TU184 was radiologically processed in both RSY2 and RSY3 (Table 3-4). Following the completion of excavation on September 2, 2010, TU184 had an exposed surface area of 918 m^2 and was 409 linear feet in length (Table 3-1). The maximum excavated TU184 depth ranged between 4 feet and 12 feet bgs (Table 3-2).

During the Parcel UC3 TCRA, five sections of pipe and Manholes MH529, MH530, and MH531 were removed from TU184 and placed on plastic pending further activities. The majority of the

ED_006787_00017608-00098

pipes removed from TU184 crumbled during excavation and were transferred to RSY2 or RSY3 along with the surrounding excavated soil for radiological processing. As indicated in Table 3-2, trench segments 03-E16-00-3D and -3E contained 8-inch-diameter VCP located at depths ranging from 7 feet to 8 feet bgs. Trench segments 03-E16-00-3H and 03-E16-74-3F contained 4-inch-diameter and 8-inch-diameter CIP located at depths between 3 feet and 7 feet bgs. Trench segment -3-E16-74-3C contained 15-inch-diameter VCP found at 7 feet bgs. The remainder of the TU184 pipes were 16-inch-diameter and 24-inch-diameter concrete located at depths ranging from 4 feet to 10 feet bgs.

A sufficient volume of sediment was identified in one pipe section removed from trench segment 03-E16-00-1H for sample collection and analysis. Two sediment samples were collected from this pipe section and submitted to the laboratory for analysis (Table 3-6). Although the sediment sample analytical results did not identify the presence of contamination for any ROC, this pipe was placed in LLRW bin DB1150D4 for disposal by the DON radiological waste contractor. The sediment sample laboratory analytical reports are provided in Appendix C.

Radiological survey activities were performed for four sections of pipe removed from trench segment 03-E16-00-1H during the Parcel UC3 TCRA activities (Table 3-5). No elevated results were identified for any of the TU184 pipes surveyed. The TU184 pipes were transferred to the DON non-LLRW waste contractor for off-site disposal or recycling. Copies of the TU184 survey reports are provided in Appendix B.

No survey activities were performed for Manholes MH529, MH530, or MH531 during the Parcel UC3 TCRA and an insufficient volume of sediment was available for sample collection and analysis. At the direction of the DON, the materials forming the walls of these manholes were crushed and the debris placed in LLRW bins DB1138D4 and DB1181D3 on September 2, 2010 to expedite completion of the main traffic corridor through HPNS. Tables 3-5 and 3-6 identify the final disposition of the TU184 piping.

6.3.2 TU184 Piping Remaining in Place

No known storm drain or sanitary sewer piping associated with TU184 remained in place on Parcel UC3 following the completion of the TCRA.

6.3.3 TU184 FSS Summary

A total of 18 systematic FSS soil samples were collected from the sidewalls and bottom of TU184 and submitted to the laboratory for analysis on September 17, 2010. No radioactivity above the release criteria specified in the AM (DON 2006) was identified in the FSS soil samples for any ROC. The release criteria are identified in Tables 2-1 and 2-2. Figure 6-1 depicts the FSS sample collection locations in TU184. The laboratory analytical reports were presented in Attachment 2 to the TU184 SUPR provided in Appendix H.

TU184 was defined for the FSS as the sum of the trench unit and the backfill material composed of both radiologically processed and released excavated soil survey units and a volume of imported fill. The average net residual radioactivity concentrations for material used as backfill in TU184 were 0.046 pCi/g for Cs-137, 0.129 pCi/g for Sr-90, and 0.285 pCi/g for Ra-226. The trench unit average net residual radioactivity concentrations were 0.038 pCi/g for Cs-137, 0.295 pCi/g for Sr-90, and 0.040 pCi/g for Ra-226. The activity used to model each radionuclide was based on the isotopic net concentration.

RESRAD modeling using the larger of the MDL or reported activity resulted in a net residual dose of 5.218 mrem/y with an increased cancer risk of 8.234×10^{-5} for the backfill material and 1.824 mrem/y with an increased cancer risk of 2.559×10^{-5} for the trench unit. The modeling parameters and results were presented in Attachments 7 and 8 to the TU184 SUPR (Appendix H).

The results of the modeling efforts determined that the potential TU184 dose due to activity concentrations greater than or equal to the MDL was 5.218 mrem/y with an increased cancer risk of 8.234×10^{-5}, which supports radiological free release. No further radiological action was recommended in the TU184 SUPR (Appendix H).

6.3.4 TU184 Backfill Activities

Radiologically processed and released excavated soil survey units and a volume of imported fill were selected as the backfill materials for TU184. The excavated soil survey units selected included:

- ES-310
- ES-315
- ES-316
- ES-320
- ES-326

Radiological information related to the processing of these excavated soil survey units is summarized in Table 3-4 and the associated laboratory analytical results were discussed in the TU184 SUPR (Appendix H). The radiological and chemical analytical reports for the imported fill are provided in Appendix M.

The RASO concurred with backfilling TU184 on December 6, 2010 and backfill operations commenced on January 6, 2011. Backfill activities were performed in accordance with the HPNS Basewide Construction Specifications (TtEC 2009b). Soil compaction testing was performed on January 17 and 18, 2011. At the completion of the backfill operations on January

ED_006787_00017608-00100

18, 2011, approximately 1,303 cubic yards of soil had been placed in TU184. Soil compaction and site restoration activities are described in Section 7.0 and the compaction test reports are provided in Appendix J. Table 3-1 summarizes the activities performed to support the recommended radiological free release of TU184.

6.4 TRENCH SURVEY UNIT 185

TU185 is located at the southeast end of Work Area 16 East within Parcel UC3 at the convergence of Crisp Road, Spear and 6th Avenues, and I Street (Figures 3-2 and 6-1). TU185 connects to TU188 on the north, Trench Survey Units 168 and 171 (Parcel UC1) on the east, and terminates on the south at the Parcel UC3 property boundary. There are no IR Program sites associated with TU185.

TU185 is composed of nine storm drain trench segments and four sanitary sewer trench segments. As identified on Figure 6-1, these trench segments include:

Storm Drain Trench Segments

- 03-E16-00-4P
- 03-E16-00-5A
- 03-E16-00-5B
- 03-E16-00-5C
- 03-E16-00-5E
- 03-E16-00-5G
- 03-E16-00-5J
- 03-E16-00-5K
- 03-E16-00-5L

Sanitary Sewer Trench Segments

- 03-E16-00-5D
- 03-E16-00-5F
- 03-E16-00-5H
- 03-E16-00-5I

Trench segments 03-E16-00-4P and -5A continued toward the north and transitioned into TU188. Each of the trench segments associated with TU185 was identified in the Design Plan presented in Attachment 2 to the Execution Plan (TtEC 2010A).

6.4.1 TU185 Removal Action Activities

Excavation activities were initiated for TU185 on September 9, 2010 in trench segments 03-E16-00-4P and -5I. A total of 103 truckloads (approximately 1,236 cubic yards) of soil were excavated from TU185 during the TCRA activities (Table 3-3). Soil excavated from TU185 was radiologically processed in both RSY2 and RSY3 (Table 3-4). Following the completion of excavation on September 15, 2010, TU185 exhibited an exposed surface area of 814 m^2 and was

301 linear feet in length (Table 3-1). The maximum excavated TU185 depth ranged between 6 feet and 18 feet bgs (Table 3-2).

During the Parcel UC3 TCRA, six manholes were removed from TU185 and placed on plastic pending further activities. The pipes associated with TU185 crumbled during removal and were transferred along with the surrounding excavated soil to RSY2 or RSY3 for radiological processing. As indicated in Table 3-2, the pipes contained in trench segments 03-E16-00-4P, -5B, -5D, -5F, -5G, -5I, and -5L were 8-inch-diameter to 24-inch-diameter VCP located at depths between 5 feet and 13 feet bgs. The remaining trench segments contained 10-inch-diameter to 21-inch-diameter concrete pipe found at depths between 6 feet and 17 feet bgs.

An insufficient volume of sediment was found in the pipes and manholes associated with TU185 for sample collection and analysis and no radiological surveys were performed for the excavated manholes. Consequently, no sediment sample analytical or radiological survey results are associated with this trench survey unit.

Manholes MH549, MH550, MH551, MH571, MH572, and MH573 were removed from TU185 during the excavation activities. At the direction of the DON, the materials forming the walls of these manholes were crushed and the debris placed in LLRW bins in September 2010 to expedite completion of the main traffic corridor through HPNS. Table 3-5 identifies the final disposition of the TU185 manholes.

6.4.2 TU185 Piping Remaining in Place

No known storm drain or sanitary sewer piping associated with TU185 remained in place on Parcel UC3 following the completion of the TCRA.

6.4.3 TU185 FSS Summary

Eighteen systematic FSS soil samples were collected from the sidewalls and bottom of excavated TU185 and submitted to the laboratory for analysis on September 24, 2010. No radioactivity above the release criteria specified in the AM (DON 2006) was identified in the FSS soil samples for any ROC. The release criteria are identified in Tables 2-1 and 2-2. Figure 6-1 depicts the FSS sample collection locations in TU185. The laboratory analytical reports were presented in Attachment 2 to the TU185 SUPR provided in Appendix H.

For the FSS, TU185 was defined as the sum of the trench unit and the backfill material composed of both radiologically processed and released excavated soil survey units and a volume of imported fill. The average net residual radioactivity concentrations for material used as backfill in TU185 were 0.048 pCi/g for Cs-137, 0.118 pCi/g for Sr-90, and 0.304 pCi/g for Ra-226. The trench unit average net residual radioactivity concentrations were 0.039 pCi/g for

Cs-137, 0.296 pCi/g for Sr-90, and 0.098 pCi/g for Ra-226. The activity used to model each radionuclide was based on the isotopic net concentration.

RESRAD modeling using the larger of the MDL or reported activity resulted in a net residual dose of 5.078 mrem/y with an increased cancer risk of 8.156×10^{-5} for the backfill material and 2.534 mrem/y with an increased cancer risk of 3.780×10^{-5} for the trench unit. The modeling parameters and results were presented in Attachments 7 and 8 to the TU185 SUPR (Appendix H).

The results of the modeling efforts determined that the potential TU185 dose due to activity concentrations greater than or equal to the MDL was 5.078 mrem/y with an increased cancer risk of 8.156×10^{-5}, which supports radiological free release. No further radiological action was recommended in the TU185 SUPR (Appendix H).

6.4.4 TU185 Backfill Activities

Radiologically processed and released excavated soil survey units and a volume of imported fill were selected as the backfill materials for TU185. The excavated soil survey units selected included:

- ES-298
- ES-304
- ES-310

Radiological information related to the processing of these excavated soil survey units is summarized in Table 3-4 and the associated laboratory analytical results were discussed in the TU185 SUPR (Appendix H). The radiological and chemical analytical reports for the imported fill are provided in Appendix M.

Concurrence to backfill TU185 was obtained from the RASO on October 27, 2010 and backfill activities were initiated on November 9, 2010. Backfill activities were performed in accordance with the HPNS Basewide Construction Specifications (TtEC 2009b). Soil compaction testing was performed on November 12, 15, and 17, 2010. At the completion of the backfill activities on November 18, 2010, approximately 1,814 cubic yards of soil had been placed in TU185. Soil compaction and site restoration activities are described in Section 7.0 and the compaction test reports are provided in Appendix J. Table 3-1 summarizes the activities performed to support the recommended radiological free release of TU185.

6.5 TRENCH SURVEY UNIT 187

TU187 is located in the central portion of Work Area 16 East along Crisp Road within Parcel UC3 (Figures 3-2 and 6-1). TU187 connects to TU174 on the north, TU189 on the east, TU166

and TU169 on the south, and TU184 on the west. There are no IR Program sites associated with TU187.

TU187 is composed of nine storm drain trench segments and two sanitary sewer trench segments. As identified on Figure 6-1, these trench segments include:

Storm Drain Trench Segments

- 03-E16-00-3I
- 03-E16-00-3J
- 03-E16-00-3K
- 03-E16-00-3L
- 03-E16-00-3O
- 03-E16-00-3R
- 03-E16-00-4A
- 03-E16-00-8A
- 03-E16-00-8Q

Sanitary Sewer Trench Segments

- 03-E16-00-1H
- 03-E16-00-3E

Trench segments 03-E16-00-1H and -3E continued from TU184 on the west through TU187, and then extended into TU189 on the east. Trench segment 03-E16-00-3I continued toward the west and transitioned into TU184. Trench segment 03-E16-00-3J transitioned into both TU166 (Work Area 16 West) and TU169. Trench segment 03-E16-00-3L continued toward the north into TU174 and -4A transitioned into TU189 on the east. Trench segment 03-E16-00-8A extended toward the south and transitioned into TU166 (Work Area 16 West). With the exception of 03-E16-00-8A and -8Q, each of the trench segments associated with TU187 was identified in the Design Plan presented in Attachment 2 to the Execution Plan (TtEC 2010a). Trench segments 03-E16-00-8A and -8Q were found during excavation of Manhole MH532.

6.5.1 TU187 Removal Action Activities

Excavation activities were initiated for TU187 on September 1, 2010 in trench segment 03-E16-00-1H. A total of 81 truckloads (approximately 972 cubic yards) of soil were excavated from TU187 during the TCRA activities (Table 3-3). Soil excavated from TU187 was radiologically processed in RSY2 and RSY4 (Table 3-4). Following the completion of excavation on September 28, 2010, TU187 had an exposed surface area of 757 m^2 and was 376 linear feet in length (Table 3-1). The maximum excavated TU187 depth ranged between 5 feet and 11 feet bgs (Table 3-2).

During the Parcel UC3 TCRA, 15 sections of pipe and Manholes MH532, MH533, and MH534 were removed from TU187 and placed on plastic pending further activities. The majority of the

ED_006787_00017608-00104

pipes removed from TU187 disintegrated during excavation and were transferred to RSY2 or RSY4 along with the surrounding excavated soil for radiological processing. As indicated in Table 3-2, trench segments 03-E16-00-3E and -4A contained 8-inch-diameter and 12-inch-diameter VCP found at depths between 4 feet and 9 feet bgs. Trench segment 03-E16-00-3R contained 4-inch-diameter CIP found at 5 feet bgs. The remaining trench segments contained 15-inch-diameter to 24-inch-diameter concrete pipe located at depths between 4 feet and 9 feet bgs.

A sufficient volume of sediment for sample collection and analysis was found in one section of pipe removed from trench segment 03-E16-00-1H and Manhole MH533 (Table 3-6). No radioactivity above the release criteria was identified in the sediment samples. At the direction of the DON, the pipe section from trench segment 03-E16-00-1H and the material forming the walls of Manhole MH533 were crushed and the debris placed in LLRW bins for off-site disposal. The sediment sample laboratory analytical reports are provided in Appendix C.

Radiological survey activities were performed for 14 sections of pipe removed from trench segment 03-E16-00-1H (Table 3-5). No elevated results were identified for any of the TU187 pipes surveyed. Based on these results, the TU187 pipe sections were transferred to the DON non-LLRW waste contractor for off-site disposal or recycling. Copies of the TU187 radiological survey reports are presented in Appendix B.

No survey activities were performed for Manholes MH532 or MH534 during the Parcel UC3 TCRA and an insufficient volume of sediment was available for sample collection and analysis. At the direction of the DON, the materials forming the walls of these manholes were crushed and the debris placed in LLRW bins DB1181D3 and BKRU026401 to expedite completion of the main traffic corridor through HPNS. Tables 3-5 and 3-6 identify the final disposition of the TU187 piping.

Due to the presence of Cs-137 contamination in one pipe section removed from adjacent TU166, one investigative soil sample was collected from TU187 and analyzed by the laboratory. No radioactivity above the release criteria was identified in this investigative soil sample.

6.5.2 TU187 Piping Remaining in Place

No known storm drain or sanitary sewer piping associated with TU187 remained in place on Parcel UC3 following the completion of the TCRA.

6.5.3 TU187 FSS Summary

A total of 18 systematic FSS soil samples were collected from the exposed sidewalls and bottom of excavated TU187 and submitted to the laboratory for analysis on October 5, 2010. No radioactivity above the release criteria specified in the AM (DON 2006) was identified in the FSS soil samples for any ROC. The release criteria are identified in Tables 2-1 and 2-2. Figure

6-1 depicts the FSS sample collection locations in TU187. The laboratory analytical reports were presented in Attachment 2 to the TU187 SUPR provided in Appendix H.

TU187 was defined for the FSS as the sum of the trench unit and the backfill material composed of both radiologically processed and released excavated soil survey units and a volume of imported fill. The average net residual radioactivity concentrations for material used as backfill in TU187 were 0.049 pCi/g for Cs-137, 0.095 pCi/g for Sr-90, and 0.326 pCi/g for Ra-226. The trench unit average net residual radioactivity concentrations were 0.036 pCi/g for Cs-137, 0.290 pCi/g for Sr-90, and -0.002 pCi/g for Ra-226. The activity used to model each radionuclide was based on the isotopic net concentration.

RESRAD modeling using the larger of the MDL or reported activity resulted in a net residual dose of 5.101 mrem/y with an increased cancer risk of 8.304×10^{-5} for the backfill material and 0.9596 mrem/y with an increased cancer risk of 1.239×10^{-5} for the trench unit. The modeling parameters and results were presented in Attachments 7 and 8 to the TU187 SUPR (Appendix H).

The results of the modeling efforts determined that the potential TU187 dose due to activity concentrations greater than or equal to the MDL was 5.101 mrem/y with an increased cancer risk of 8.304×10^{-5}, which supports radiological free release. No further radiological action was recommended in the TU187 SUPR (Appendix H).

6.5.4 TU187 Backfill Activities

Radiologically processed and released excavated soil survey units and a volume of imported fill were selected as the backfill materials for TU187. The excavated soil survey units selected included:

- ES-307
- ES-309

Radiological information related to the processing of these excavated soil survey units is summarized in Table 3-4 and the associated laboratory analytical results were discussed in the TU187 SUPR (Appendix H). The radiological and chemical analytical reports for the imported fill are provided in Appendix M.

The RASO concurred with backfilling TU187 on January 6, 2011 and backfill operations commenced on January 11, 2011. Backfill activities were performed in accordance with the HPNS Basewide Construction Specifications (TtEC 2009b). Soil compaction testing was performed on January 13, 17, and 18, 2011. At the completion of backfill operations on January 18, 2011, approximately 987 cubic yards of soil had been placed in TU187. Soil compaction and

site restoration activities are described in Section 7.0 and the compaction test reports are provided in Appendix J. Table 3-1 summarizes the activities performed to support the recommended radiological free release of TU187.

6.6 TRENCH SURVEY UNIT 188

TU188 is located at the east end of Work Area 16 East within Parcel UC3 at the intersection of Crisp Road, Spear and 6th Avenues, and I Street (Figures 3-2 and 6-1). TU188 terminates at the Parcel UC3 property boundary on the north. On the east, TU188 connects to Trench Survey Unit 168 located on adjacent Parcel UC1 (Spear Avenue). TU188 connects to TU185 on the south and TU169 and TU190 on the west. Small segments of TU188 are situated within IR Program Site IR-04. The chemicals of concern associated with IR-04 are listed in Table 3-9.

TU188 is composed of ten storm drain trench segments and three sanitary sewer trench segments. As identified on Figure 6-1, these trench segments include:

Storm Drain Trench Segments

- 03-E16-00-3M
- 03-E16-00-4F
- 03-E16-00-4G
- 03-E16-00-4H
- 03-E16-00-4M
- 03-E16-00-4N
- 03-E16-00-4O
- 03-E16-00-4P
- 03-E16-00-5A
- 03-E16-04-4G

Sanitary Sewer Trench Segments

- 03-E16-00-1H
- 03-E16-00-4D
- 03-E16-00-4E

Trench segments 03-E16-00-1H and -4D continued into TU190 on the west. Trench segment 03-E16-00-3M transitioned into TU169 on the west and trench segments -4P and -5A extended into TU185 on the south. Each of trench segments associated with TU188 was identified in the Design Plan presented in Attachment 2 to the Execution Plan (TtEC 2010a). Although identified in the Design Plan, trench segments 03-E16-00-4J, -4K, and -4L could not be found after several excavation attempts. These trench segments may have been removed during previous HPNS activities.

6.6.1 TU188 Removal Action Activities

Excavation activities were initiated for TU188 on September 9, 2010 in trench segments 03-E16-00-4G and -4P. A total of 86 truckloads (approximately 1,032 cubic yards) of soil were excavated from TU188 during the TCRA activities (Table 3-3). Soil excavated from TU188 was radiologically processed in RSY2, RSY3, and RSY4 (Table 3-4). Following the completion of excavation on October 4, 2010, TU188 exhibited an exposed surface area of 870 m^2 and was 453 linear feet in length (Table 3-1). The maximum excavated TU188 depth ranged between 5 feet and 13 feet bgs (Table 3-2).

During the Parcel UC3 TCRA, Manholes MH539, MH540, MH541, MH542, and MH544 were removed from TU188 and placed on plastic pending further activities. The pipes associated with TU188 disintegrated during removal and were transferred along with the surrounding excavated soil to RSY2, RSY3, or RSY4 for radiological processing. As indicated in Table 3-2, trench segment 03-E16-00-3M contained 4-inch-diameter CIP at a depth of 5 feet bgs. Trench segments 03-E16-00-4D, -4E, -4F, -4H, -4M, -4O, and -4P contained 6-inch-diameter to 12-inch-diameter VCP located at depths between 4 feet and 13 feet bgs. The remainder of the TU188 trench segments contained 10-inch-diameter and 24-inch-diameter concrete pipe located at depths ranging from 6 feet to 12 feet bgs.

An insufficient volume of sediment was found in the TU188 piping for sample collection and analysis. Consequently, no sediment sample analytical results are associated with TU188 piping.

Radiological survey activities were not performed on Manholes MH539, MH540, MH541, MH542, or MH544. At the direction of the DON, the materials forming the walls of these manholes were crushed and the debris placed in LLRW bins in October 2010 to expedite completion of the main traffic corridor through HPNS. The final disposition of these manholes is identified in Table 3-5.

One investigative soil sample was collected from TU188 due to the presence of Cs-137 contamination in sediment samples collected from piping in adjacent TU169 to the west. No radioactivity above the release criteria was identified in this investigative soil sample for any ROC.

6.6.2 TU188 Piping Remaining in Place

No known storm drain or sanitary sewer piping associated with TU188 remained in place on Parcel UC3 following the completion of the TCRA.

6.6.3 TU188 FSS Summary

Eighteen systematic FSS soil samples were collected from the sidewalls and bottom of excavated TU188 and submitted to the laboratory for analysis on October 6, 2010. No radioactivity above

the release criteria specified in the AM (DON 2006) was identified in the FSS soil samples for any ROC. The release criteria are identified in Tables 2-1 and 2-2. Figure 6-1 depicts the FSS sample collection locations in TU188. The laboratory analytical reports were presented in Attachment 2 to the TU188 SUPR provided in Appendix H.

For the FSS, TU188 was defined as the sum of the trench unit and the backfill material composed of both radiologically processed and released excavated soil survey units and a volume of imported fill. The average net residual radioactivity concentrations for material used as backfill in TU188 were 0.049 pCi/g for Cs-137, 0.114 pCi/g for Sr-90, and 0.314 pCi/g for Ra-226. The trench unit average net residual radioactivity concentrations were 0.044 pCi/g for Cs-137, 0.239 pCi/g for Sr-90, and 0.107 pCi/g for Ra-226. The activity used to model each radionuclide was based on the isotopic net concentration.

RESRAD modeling using the larger of the MDL or reported activity resulted in a net residual dose of 5.446 mrem/y with an increased cancer risk of 8.683×10^{-5} for the backfill material and 2.615 mrem/y with an increased cancer risk of 3.938×10^{-5} for the trench unit. The modeling parameters and results were presented in Attachments 7 and 8 to the TU188 SUPR (Appendix H).

The results of the modeling efforts determined that the potential TU188 dose due to activity concentrations greater than or equal to the MDL was 5.446 mrem/y with an increased cancer risk of 8.683×10^{-5}, which supports radiological free release. No further radiological action was recommended in the TU188 SUPR (Appendix H).

6.6.4 TU188 Backfill Activities

Radiologically processed and released excavated soil survey units and a volume of imported fill were selected as the backfill materials for TU188. The excavated soil survey units selected included:

- ES-293
- ES-305
- ES-318

Radiological information related to the processing of these excavated soil survey units is summarized in Table 3-4 and the associated laboratory analytical results were discussed in the TU188 SUPR (Appendix H). The radiological and chemical analytical reports for the imported fill are provided in Appendix M.

Concurrence with backfilling TU188 was obtained from the RASO on November 8, 2010 and backfill activities commenced the same day. Backfill activities were performed in accordance

with the HPNS Basewide Construction Specifications (TtEC 2009b). Soil compaction testing was performed on November 12, 15 and 17, 2010. At the completion of the backfill activities on November 18, 2010, approximately 1,331 cubic yards of soil had been placed in TU188. Soil compaction and site restoration activities are described in Section 7.0 and the compaction test reports are provided in Appendix J. Table 3-1 summarizes the activities performed to support the recommended radiological free release of TU188.

6.7 TRENCH SURVEY UNIT 189

TU189 is located in the central portion of Work Area 16 East within Parcel UC3 along the north side of Crisp Road (Figures 3-2 and 6-1). TU189 is connected to TU187 on the west and TU190 on the east. On the north, TU189 terminates at the Parcel UC3 property boundary. No IR Program sites are associated with TU189.

TU189 is composed of two storm drain trench segments and four sanitary sewer trench segments. As identified on Figure 6-1, these trench segments include:

Storm Drain Trench Segments	Sanitary Sewer Trench Segments
• 03-E16-00-4A	• 03-E16-00-1H
• 03-E16-00-4C	• 03-E16-00-3E
	• 03-E16-00-3Q
	• 03-E16-00-4B

Trench segment 03-E16-00-1H extended from TU187 on the west, through TU189, and transitioned into TU190 on the east. Trench segments 03-E16-00-3E and -4A continued west into TU187. Trench segment 03-E16-00-4B transitioned on the east into TU190. Each of the trench segments associated with TU189 was identified in the Design Plan presented in Attachment 2 to the Execution Plan (TtEC 2010a).

6.7.1 TU189 Removal Action Activities

Excavation activities were initiated for TU189 on September 28, 2010 in trench segment 03-E16-00-1H A total of 70 truckloads (approximately 840 cubic yards) of soil were excavated from TU189 during the TCRA activities (Table 3-3). Soil excavated from TU189 was radiologically processed in RSY3 and RSY4 (Table 3-4). Following the completion of excavation on September 30, 2011, TU189 exhibited an exposed surface area of 623 m^2 and was 345 linear feet in length (Table 3-1). The maximum excavated TU189 depth ranged between 4 feet and 10 feet bgs (Table 3-2).

Three manholes were removed from TU189 during the TCRA activities and placed on plastic pending further activities. The TU189 pipes crumbled during removal and were transferred

along with the surrounding excavated soil to RSY3 and RSY4 for processing. As indicated in Table 3-2, trench segment 03-E16-00-1H contained 24-inch-diameter concrete pipe found at a depth of 8 feet bgs. Trench segment 03-E16-00-4C contained 4-inch-diameter steel pipe located at a depth of 5 feet bgs. The remaining trench segments contained 8-inch-diameter to 12-inch-diameter VCP found at depths ranging from 3 feet to 9 feet bgs.

An insufficient volume of sediment was found in the TU189 piping for sample collection and analysis. Consequently, no sediment sample analytical results are associated with TU189.

Manholes MH535, MH536, and MH537 were removed from TU189 during the Parcel UC3 removal action activities; however, no radiological survey activities were performed. At the direction of the DON, the materials forming the walls of these manholes were crushed and the debris placed in LLRW bins BKRU025503G12, BKRU0236354G12, and BKRU026401 in October 2010 to expedite completion of the main traffic corridor through HPNS. Table 3-5 identifies the final disposition of the TU189 manholes.

6.7.2 TU189 Piping Remaining in Place

No known storm drain or sanitary sewer piping associated with TU189 remained in place on Parcel UC3 following the completion of the TCRA.

6.7.3 TU189 FSS Summary

A total of 18 systematic FSS soil samples were collected from the exposed sidewalls and bottom of excavated TU189 on October 15, 2010 and submitted to the laboratory for analysis. No radioactivity above the release criteria specified in the AM (DON 2006) was identified in the FSS soil samples for any ROC. The release criteria are identified in Tables 2-1 and 2-2. Figure 6-1 depicts the FSS sample collection locations in TU189. The laboratory analytical reports were presented in Attachment 2 to the TU189 SUPR provided in Appendix H.

For the FSS, TU189 was defined as the sum of the trench unit and the backfill material composed of both a radiologically processed and released excavated soil survey unit and a volume of imported fill. The average net residual radioactivity concentrations for material used as backfill in TU189 were 0.051 pCi/g for Cs-137, 0.119 pCi/g for Sr-90, and 0.325 pCi/g for Ra-226. The trench unit average net residual radioactivity concentrations were 0.029 pCi/g for Cs-137, 0.177 pCi/g for Sr-90, and -0.001 pCi/g for Ra-226. The activity used to model each radionuclide was based on the isotopic net concentration.

RESRAD modeling using the larger of the MDL or reported activity resulted in a net residual dose of 4.599 mrem/y with an increased cancer risk of 7.650×10^{-5} for the backfill material and 0.5024 mrem/y with an increased cancer risk of 6.556×10^{-6} for the trench unit. The modeling

parameters and results were presented in Attachments 7 and 8 to the TU189 SUPR (Appendix H).

The results of the modeling efforts determined that the potential TU189 dose due to activity concentrations greater than or equal to the MDL was 4.599 mrem/y with an increased cancer risk of 7.650×10^{-5}, which supports radiological free release. No further radiological action was recommended in the TU189 SUPR (Appendix H).

6.7.4 TU189 Backfill Activities

Radiologically processed and released excavated soil survey unit ES-322 and a volume of imported fill were selected as the backfill materials for TU189. Radiological information related to the processing of ES-322 is summarized in Table 3-4 and the associated laboratory analytical results were discussed in the TU189 SUPR (Appendix H). The radiological and chemical analytical reports for the imported fill are provided in Appendix M.

The RASO concurred with backfilling TU189 on December 6, 2010 and backfill activities were initiated on January 8, 2011. Approximately 659 cubic yards of soil was placed in TU189 to grade followed by the application of road base material over the backfilled trench. Backfill activities were performed in accordance with the HPNS Basewide Construction Specifications (TtEC 2009b). Backfill activities were completed for TU189 on January 11, 2011. A summary of the activities performed to support the recommended radiological free release of TU189 is provided in Table 3-1.

6.8 TRENCH SURVEY UNIT 190

TU190 is composed of two physically separate trench segments located in Work Area 16 East within Parcel UC3 along the north and south sides of Crisp Road (Figures 3-2 and 6-1). The northern portion of TU190 connects to TU189 on the west and TU188 on the east and terminates on the north at the Parcel UC3 property boundary. The southern portion of TU190 connects to TU169 on the west and east and terminates on the south at the Parcel UC3 property boundary. No IR Program sites are associated with TU190.

TU190 is composed of two storm drain trench segments and three sanitary sewer trench segments. As identified on Figure 6-1, these trench segments include:

<u>Storm Drain Trench Segments</u>

- 03-E16-00-3N
- 03-E16-00-8B

<u>Sanitary Sewer Trench Segments</u>

- 03-E16-00-1H
- 03-E16-00-4B
- 03-E16-00-4D

Trench segment 03-E16-00-1H extended from TU189 on the west, through TU190, and transitioned into TU188 on the east. Trench segments 03-E16-00-3N and -8B continued into TU169 on the west and east. Trench segment 03-E16-00-4B transitioned into TU189 on the west and trench segment -4D extended into TU188 on the east. With the exception of 03-E16-00-8B, each of the trench segments associated with TU190 was identified in the Design Plan presented in Attachment 2 to the Execution Plan (TtEC 2010a). Trench segment 03-E16-00-8B was found during excavation of TU169.

6.8.1 TU190 Removal Action Activities

Excavation activities were initiated for TU190 on September 14, 2010 in trench segment 03-E16-00-3N. A total of 43 truckloads (approximately 516 cubic yards) of soil were excavated from TU190 during the TCRA activities (Table 3-3). Soil excavated from TU190 was radiologically processed in RSY3 and RSY4 (Table 3-4). Following the completion of excavation on September 30, 2010, TU190 exhibited an exposed surface area of 580 m^2 and was 250 linear feet in length (Table 3-1). The maximum excavated TU190 depth ranged between 3 feet and 10 feet bgs (Table 3-2).

During the Parcel UC3 TCRA, one manhole was excavated from TU190 and placed on plastic pending further activities. The TU190 pipes disintegrated during removal and the debris was transferred along with the surrounding excavated soil to RSY3 or RSY4 for radiological processing. As indicated in Table 3-2, trench segment 03-E16-00-1H contained 24-inch-diameter concrete pipe found at a depth of 8 feet bgs. Trench segments 03-E16-00-3N and -8B contained 4-inch-diameter CIP located at depths ranging from 3 feet to 4 feet bgs. The remaining trench segments contained 10-inch-diameter VCP located at a depth of 9 feet bgs.

An insufficient volume of sediment was found in the TU190 piping during the Parcel UC3 TCRA activities for sample collection and analysis. Consequently, no sediment sample analytical results are associated with TU190 piping.

Manhole MH538 was removed from TU190 on September 30, 2010; however, no radiological survey activities were performed. At the direction of the DON, the materials forming the walls of Manhole MH538 were crushed and the debris placed in LLRW bins to expedite completion of the main traffic corridor through HPNS. The final disposition of Manhole MH538 is identified in Table 3-5.

A concrete swale associated with TU190 was identified during the storm drain and sanitary sewer excavation activities. The swale materials were removed in October 2010 and the concrete debris placed on plastic pending further activities. Radiological survey activities were performed for the swale debris on October 13, 2010 (HPS-A-TU190-001). No radioactivity above the release criteria was associated with the survey results and the debris was released as

non-LLRW. The radiologically surveyed and released concrete debris was transferred to the DON non-LLRW contractor for off-site disposal or recycling. The concrete swale survey reports are provided in Appendix I.

Four investigative soil samples were collected from TU190 due to the presence of Cs-137 contamination in the adjacent TU169 sediment samples. No radioactivity above the release criteria was identified in the investigative sample analytical results for any ROC.

6.8.2 TU190 Piping Remaining in Place

No known storm drain or sanitary sewer piping associated with TU190 remained in place on Parcel UC3 following completion of the TCRA activities.

6.8.3 TU190 FSS Summary

Eighteen systematic FSS soil samples were collected from the exposed sidewalls and bottom of excavated TU190 on October 12, 2010 and submitted to the laboratory for analysis. No radioactivity above the release criteria specified in the AM (DON 2006) was identified in the FSS soil samples for any ROC. The release criteria are identified in Tables 2-1 and 2-2. Figure 6-1 depicts the FSS sample collection locations in TU190. The laboratory analytical reports were presented in Attachment 2 to the TU190 SUPR provided in Appendix H.

For the FSS, TU190 was defined as the sum of the trench unit and the backfill material composed of both a radiologically processed and released excavated soil survey unit and a volume of imported fill. The average net residual radioactivity concentrations for material used as backfill in TU190 were 0.050 pCi/g for Cs-137, 0.082 pCi/g for Sr-90, and 0.346 pCi/g for Ra-226. The trench unit average net residual radioactivity concentrations were 0.026 pCi/g for Cs-137, 0.227 pCi/g for Sr-90, and -0.108 pCi/g for Ra-226. The activity used to model each radionuclide was based on the isotopic net concentration.

RESRAD modeling using the larger of the MDL or reported activity resulted in a net residual dose of 4.59 mrem/y with an increased cancer risk of 7.748×10^{-5} for the backfill material and 0.5835 mrem/y with an increased cancer risk of 7.559×10^{-6} for the trench unit. The modeling parameters and results were presented in Attachments 7 and 8 to the TU190 SUPR (Appendix H).

The results of the modeling efforts determined that the potential TU190 dose due to activity concentrations greater than or equal to the MDL was 4.59 mrem/y with an increased cancer risk of 7.748×10^{-5}, which supports radiological free release. No further radiological action was recommended in the TU190 SUPR (Appendix H).

6.8.4 TU190 Backfill Activities

Radiologically processed and released excavated soil survey unit ES-312 and a volume of imported fill were selected as the backfill materials for TU190. Radiological information related to the processing of ES-312 is summarized in Table 3-4 and the associated laboratory analytical results were discussed in the TU190 SUPR (Appendix H). The radiological and chemical analytical reports for the imported fill are provided in Appendix M.

Concurrence to backfill TU190 was obtained from the RASO on January 6, 2011. Backfilling operations commenced on January 8, 2011 and were completed on January 11, 2011. Approximately 635 cubic yards of soil was placed in TU190 to grade followed by the application of road base material over the backfilled trench. Backfill activities were performed in accordance with the HPNS Basewide Construction Specifications (TtEC 2009b). Site restoration activities are described in Section 7.0. A summary of the activities performed to support the recommended radiological free release of TU190 is provided in Table 3-1.

ED_006787_00017608-00115

This page intentionally left blank.

ED_006787_00017608-00116

7.0 SITE RESTORATION AND INFILTRATION TRENCH CONSTRUCTION

Site restoration and temporary infiltration trench activities were performed following the completion of the Parcel UC3 storm drain and sanitary sewer systems excavation and backfill activities. These activities are described in the following sections.

7.1 SITE RESTORATION

Backfill and compaction activities for the Parcel UC3 storm drain and sanitary sewer excavations were performed in accordance with the Execution Plan (TtEC 2010a) and the Basewide Construction Specifications (TtEC 2009b).

For elevations 3 feet to 4 feet bgs and deeper, backfill material was placed in 2-foot-thick loose lifts using radiologically surveyed and released excavated soil, imported fill, or a combination of the two. The backfill soil placed in the trench survey units was then compacted by pressing the material down using mechanical compaction equipment. This process was repeated until the appropriate elevation and slope were achieved at approximately 4 feet below the final grade in roadway trenches and 0.5 foot below the final grade in non-roadway trenches. The remaining 4 feet was backfilled with imported fill for the roadway trenches and with previously removed and crushed asphalt material for the non-roadway trenches.

To ensure that the imported fill would meet compaction requirements, the soil was visually inspected prior to placement to verify that it consisted of well-graded sands and gravels that did not contain particles greater than 2 inches in diameter. Samples of the imported fill were evaluated using the American Society for Testing and Materials (ASTM) D422 sieve analysis method and ASTM D1557 maximum density testing at a frequency of one sample per 5,000 cubic yards. These data were used to determine the compaction of the backfill material via neutron densitometry.

Once the proper elevation and slope were achieved in the roadway trenches, the imported fill was placed in 1-foot lifts using a single drum vibratory roller for each lift. Compaction testing was performed for each 1-foot lift depth interval with a minimum rate of one test per every 50 linear feet of backfilled trench to verify that a relative compaction of 95 percent or greater was achieved. Compaction testing was performed in accordance with ASTM Standard D6938-08a (ASTM 2008). The compaction test reports are provided in Appendix J.

Stockpiled road base (recycled asphalt) material was placed over the compacted imported fill in roadway areas followed by 4 inches of new asphalt to restore Crisp Road to levels consistent with pre-excavation levels and surrounding unexcavated conditions. In addition, a double yellow

ED_006787_00017608-00117

center line and two white roadway edge lines were painted on the street in accordance with the Manual on Uniform Traffic Control Devices for Streets and Highways Revision 2 (DOT 2007) to complete the restoration activities.

7.2 TEMPORARY INFILTRATION TRENCH CONSTRUCTION

To temporarily replace the removed Parcel UC3 underground storm drain systems, a surface-based system consisting of infiltration trenches and catch basins was installed to drain stormwater runoff from Crisp Road, upgradient properties, and the adjacent SFRA property (formerly Parcel A). The stormwater runoff drained into the new catch basins that tie into the infiltration trenches and the Parcel E drainage system. The temporary infiltration trench system is depicted on Figure 7-1. The design calculations were based on 1.3 inches of rainfall per hour. The constructed system can drain a maximum of 5 acres per infiltration trench. During site restoration activities, Crisp Road was graded specifically to direct stormwater flow. Existing curbing was used to direct stormwater east along Crisp Road. The catch basins have the same capacity as the previously removed catch basins.

The stormwater system included the construction of four infiltration trenches and the installation of seven catch basins for Parcel UC3. These infiltration trenches were designed to collect stormwater runoff from Building 815 to the north and the roadway. The first infiltration trench was constructed on the south side of Crisp Road, north of Building 830. The second infiltration trench was constructed on the south side of Crisp Road, across the road from the southwest corner of Building 815. The remaining infiltration trench, also located on the south side of Crisp Road, was installed in two segments and is connected by a new 12-inch-diameter high-density polyethylene corrugated pipe. Details for infiltration trench construction were presented in Execution Plan (TtEC 2010a) and the drainage details are depicted on Figure 7-2.

The infiltration trenches were 4 feet in depth, lined with non-woven geotextile, and filled with 1.5-inch to 2.5-inch-diameter drain rock. The first infiltration trench measured 10 feet wide by 130 feet in length. This particular trench was designed for a drainage area 36,646 square feet in size, designated as A1, and consisted of a typical catch basin connection to the infiltration trench. The second infiltration trench measured 9 feet by 145 feet and supported a drainage area 34,731 square feet in size, designated as A2, in addition to the roof drains from Building 815. This consisted of the building draining from existing building pipe into a catch basin connecting to the infiltration trench. The third infiltration trench measured 7 feet by 88 feet and the fourth trench measured 7 feet by 100 feet. These trenches were designed to drain an area 39,435 square feet in size, designated as A3. Stormwater runoff that remained is caught in the catch basin located at the east end of Crisp Road that connects to the existing Parcel E active drainage system.

The design also included the installation of seven new catch basins located along the northern Crisp Road boundary to effectively capture stormwater and surface flow from the SFRA

property (two catch basins) and the roadway (five catch basins). The depth of the catch basins varied based on the existing tie-in pipes from the SFRA property. The catch basins were comprised of precast concrete and welded galvanized grates. Each of the catch basins was rated for H-20 traffic loading.

ED_006787_00017608-00119

This page intentionally left blank.

ED_006787_00017608-00120

8.0 PARCEL UC3 REMOVAL ACTION COST SUMMARY

This section provides a summary of the estimated costs incurred in performing the Parcel UC3 removal action activities. The cost of the removal action is approximate due to numerous factors including changes in contract vehicles and overlapping removal action activities performed for other HPNS parcels within the same period of time.

ACTIVITY	ESTIMATED COST	
Storm Drain and Sanitary Sewer Removal	$	3,570,991
Remediation (including laboratory costs)	$	2,280,923
Parcel UC3 Site Restoration and Infiltration Trench	$	989,314
LLRW Disposal	$	40,856
Estimated Total	$	6,882,084

This page intentionally left blank.

ED_006787_00017608-00122

9.0 CONCLUSIONS AND RECOMMENDATION

The Parcel UC3 Radiological RACR was prepared at the direction of the DON to describe and summarize the storm drain and sanitary sewer TCRA activities performed for Parcel UC3 to protect the public health and welfare, and the environment from actual or potential releases of radiologic contaminants and document the results of the implemented radiological removal action. The Parcel UC3 storm drain and sanitary sewer TCRA activities were directed by the DON with the support of the RASO. This TCRA was conducted in accordance with the requirements of CERCLA as amended by SARA and, to the practicable, the NCP. Except in relation to reuse as potential backfill material or waste characterization for disposal of excavated soil derived from removal of the Parcel UC3 storm drain and sanitary sewer systems, this Radiological RACR did not address chemical contamination and did not include or affect any other designated HPNS parcels.

The defined Crisp Road (Work Area 16) property at HPNS to be designated as Parcel UC3 has not yet been established by the DON as a separate land parcel. Once the Proposed Plan is approved, the results of the implemented TCRA activities documented in this Radiological RACR will support preparation of the Parcel UC3 ROD. For presentation in this Radiological RACR, the Crisp Road property designated as Parcel UC3 was further divided into Work Area 16 West, Work Area 16 Central, and Work Area 16 East. No buildings or former building sites were associated with Parcel UC3.

The radiological removal action activities described and summarized in this Radiological RACR followed the HRA (NAVSEA 2004) and do not impact other portions of Parcel UC3 property that extend west of the Crisp Road, Griffith Street, and Palou Avenue intersection. This Radiological RACR was limited to the approximately 45,407 m^2 of Parcel UC3 that extends the length of Crisp Road at HPNS. Beginning at the intersection of Crisp Road, I Street, and Spear and 6th Avenues, the radiologically impacted storm drain and sanitary sewer systems removal action activities continued along Crisp Road toward the west and terminated near the HPNS west gate at the intersection of Crisp Road, Griffith Street, and Palou Avenue. No further radiologically impacted HPNS storm drain or sanitary sewer systems extend beyond this intersection.

Parcel UC3 is bounded on the north by the SFRA property (formerly Parcel A) and on the east by HPNS Parcel UC1. The topography of the SFRA property is hilly and separated from the flat lowland area comprising Parcel UC3 by intermittent retaining walls at the base of the slope. On the south, Parcel UC3 is bounded by HPNS Parcels G and E, and by private property located within the City of San Francisco limits.

ED_006787_00017608-00123

Based on its radiological operational history and site-specific investigative data, the DON determined that potential low-level radioactive contamination in some buildings, storm drain and sanitary sewer lines, soil, debris, and slag material at HPNS required a response action. This decision was documented in the AM (DON 2006). The purpose of the AM was to document the DON's decision to perform TCRAs at areas throughout HPNS that could contain localized radioactive contamination and substantially eliminate identified exposure pathways to surrounding populations and nearby ecosystems. The DON identified the ARARs for the HPNS removal actions in the AM. The release criteria and remediation goals for HPNS localized radioactive contamination were developed based on the ARARs and were considered to be the most conservative available. The AM was revised and updated to implement the recommendations identified in Volume II of the HRA (NAVSEA 2004). Since no Parcel UC3 ROD has been prepared by the DON at this time, the HPNS radiological release criteria established in the AM (DON 2006) were used as the remediation goals during the TCRA activities.

The present-day configuration of the storm drain and sanitary sewer systems was the result of an evolutionary process that likely caused radiological contamination from the same sources to impact piping and other components of the storm drain and sanitary sewer systems. The CSM (DON 2008) is based on the supposition that radioactive materials likely were discharged from numerous locations throughout HPNS into the storm drain and sanitary sewer systems and may have been released into surrounding soils during the course of normal operations and maintenance or repair activities. Because the storm drain and sanitary sewer pipelines were not sealed, some leaking was anticipated, and historical information indicates that the pipelines often were cleaned by power washing that may have forced radiological contamination into the surrounding soil. The storm drain and sanitary sewer removal actions performed to date support the accuracy of the CSM. Based on historical documentation presented in the HRA (NAVSEA 2004), the ROCs selected for the Parcel UC3 storm drain and sanitary sewer systems included Cs-137, Ra-226, and Sr-90.

Fieldwork for the Parcel UC3 storm drain and sanitary sewer TCRA was initiated on December 15, 2009 and continued through June 2011. Construction of RSY4 for radiologically processing excavated soil was initiated on March 11, 2010. Prior to initiating excavation of the storm drain and sanitary sewer systems, several utilities including water, natural gas, fiber optic communication lines, storm drain and sanitary sewer lines, and electrical power were relocated. In addition, access roads were constructed to support tenant and DON operations following closure of Crisp Road.

Excavation of the Parcel UC3 storm drain and sanitary sewer systems was initiated on March 5, 2010 in TU166 and the last truckload of soil was excavated from TU188 on October 4, 2010. Excavation of the Parcel UC3 storm drain and sanitary sewers resulted in the designation of 21

ED_006787_00017608-00124

trench survey units divided into Work Area 16 West (TU166, TU172, TU173, TU177, TU178, TU179, TU180, and TU181), Work Area 16 Central (TU170, TU175, TU176, TU182, and TU183), and Work Area 16 East (TU169, TU174, TU184, TU185, TU187, TU188, TU189, and TU190) for presentation in this Radiological RACR. In total, 18,363 linear feet of trench (inclusive of soil, pipes, and manholes) was excavated during the TCRA activities. The maximum depths of the excavated trenches ranged between 2 feet and 18 feet bgs. At the completion of excavation, the total area of the exposed trench surfaces (sidewalls and bottoms) in Parcel UC3 was 16,068 m^2 with 9,212 linear feet of trench.

The soils overlying the storm drain and sanitary sewer pipes and approximately 1 foot of soil surrounding each pipe and manhole were excavated and transferred to the RSYs for radiological processing. The excavated soil often included small sections of crumbled pipe and crushed manhole pieces that were processed along with the soil. In total, 1,502 truckloads (approximately 18,024 cubic yards) of soil were excavated and transferred to the RSYs for processing during the Parcel UC3 TCRA.

A total of 66 screening pads containing soil derived from the Parcel UC3 storm drain and sanitary sewer excavation activities were processed in the RSYs. During processing, radiological surface surveys were conducted and soil samples collected and submitted to the laboratory for analysis. Any soil sample result exceeding a radionuclide-specific release criterion was remediated. In total, 2,837 soil samples were collected from the Parcel UC3 excavated soil survey units processed in the RSYs during the removal action activities and analyzed by gamma spectroscopy. Based on the analytical results, approximately 789 cubic yards of soil that exceeded the radiological release criteria was remediated from these excavated soil survey units. Radionuclide concentrations greater than the release criteria were limited to Ra-226 ranging from 1.4851 pCi/g to 3.2976 pCi/g and Cs-137 ranging from 0.11349 pCi/g to 0.16916 pCi/g. No concentrations above the radionuclide-specific release criterion were identified for Sr-90 in the soil samples collected from the excavated soil survey units processed in the RSYs. The majority of the Parcel UC3 radiologically surveyed and released excavated soil survey units processed in the RSYs was backfilled into appropriate trenches with the concurrence of the RASO. A total of five radiologically processed excavated soil survey units derived from IR Program Sites IR-04 and IR-56 soils that exceeded HPNS chemical release limits were disposed of off-site by the DON non-LLRW waste contractor with the concurrence of the RASO.

During the TCRA, 260 pipe sections and 48 manholes were removed from the Parcel UC3 trenches and staged on plastic pending further activities. Radiological surveys were performed for 251 sections of pipe with no results indicating the presence of elevated concentrations. At the direction of the DON, no radiological surveys were performed on manholes excavated from Parcel UC3 due to the limited quantity removed and to expedite completion of the main HPNS

traffic thoroughfare. The concrete and brick forming the walls of 41 manholes were crushed and the debris placed in LLRW bins for disposal by the DON radiological waste contractor.

A sufficient volume of sediment was collected from nine sections of pipe and seven manholes during the Parcel UC3 removal action. A total of 17 sediment samples were collected and submitted to the laboratory for analysis by gamma spectroscopy. The analytical results identified the presence of Cs-137 contamination in four sections of pipe and two manholes. The highest Cs-137 sediment concentrations were identified at 0.22526 pCi/g in a pipe section excavated from trench segment 03-E16-00-1D and at 0.33662 pCi/g in Manhole MH543. No Ra-226 or Sr-90 contamination was identified in any of the sediment samples analyzed. Pipes and manholes associated with sediment sample analytical results that exceeded the Cs-137 release criterion were placed in LLRW bins for off-site disposal by the DON radiological waste contractor.

The majority of the storm drain and sanitary sewer pipe sections and manholes were excavated; however, small sections of piping were left in place following the completion of the TCRA. Radiological surveys were performed on a number of these pipes left in place with no elevated results identified. Based on the survey results and other data generated during the TCRA activities, the DON concluded that the piping remaining in place was unlikely to be radiologically contaminated.

Numerous soil samples were collected from the exposed sidewalls and bottoms of the 21 excavated trench survey units to determine whether radionuclide contamination was present above the release criteria. A total of 514 soil samples (136 investigative and 378 systematic FSS samples) were collected from the 21 designated trench survey units and analyzed by the laboratory. The highest Cs-137 and Ra-226 investigative soil sample analytical results were identified in TU169 at 0.17749 pCi/g and 4.1008 pCi/g, respectively. Based on the analytical results, approximately 1,090 cubic yards of soil was remediated from the Parcel UC3 trench survey units and either placed in LLRW bins for off-site disposal or transferred to the RSYs for radiological processing to reduce the overall volume of LLRW generated at HPNS. The LLRW bins were transported off-site by the DON radiological waste contractor to either the U.S. Ecology facility in Idaho or the Energy Solutions facility in Clive, Utah. Contaminant concentrations in trench survey unit soils ranged between 0.12702 and 0.17749 pCi/g for Cs-137 and between 1.5023 and 4.1008 pCi/g for Ra-226. The majority of the contaminated soil was remediated from TU169 located in Work Area 16 West. None of the final 18 systematic FSS soil samples collected from each of the 21 excavated trenches identified the presence of residual radioactivity above the release criteria for any ROC. The laboratory analytical results for the final 18 systematic FSS soil samples were presented in each of the 21 SUPRs provided in Appendix F (Work Area 16 West), Appendix G (Work Area 16 Central), and Appendix H (Work Area 16 East).

The objective of the storm drain and sanitary sewer FSS activities was to demonstrate that identified residual radioactivity levels inside the excavated trench and within the materials used as backfill met the release criteria. During the Parcel UC3 TCRA, a total of 378 FSS trench soil samples were collected from the exposed sidewalls and bottoms of the 21 trench survey units and analyzed by the laboratory. None of the FSS soil samples indicated the presence of residual radioactivity above the release criteria for any ROC. These FSS results were used for dose and risk modeling to facilitate regulatory agency concurrence for unrestricted radiological release. The radiological details of the storm drain and sanitary sewer removal work completed for Parcel UC3 and the laboratory analytical results for the final FSS soil samples collected from the trenches and the excavated soil survey units and/or imported fill used as backfill material were provided in each of the SUPRs included in Appendices F through H.

The DON submitted the 21 SUPRs included in Appendices F through H to the EPA, DTSC, and CDPH requesting concurrence for unrestricted radiological release based on the results presented in each document and the information provided in this Radiological RACR. Each of the Parcel UC3 draft SUPRs previously was provided to the EPA, DTSC, and the CDPH, who submitted comments that were addressed in the final SUPRs. Approval of the final SUPRs will occur as part of the review and regulatory concurrence with this Radiological RACR.

The Parcel UC3 radiological fieldwork performed supports the accuracy of the CSM. Similar types of fill materials were found during excavation activities and no radioactive waste materials were discovered. Identified radiological contamination was found primarily in excavated soil and there was little indication of historical spills or accidental releases based on historical research and radiologically impacted site investigations.

Survey units for FSS activities consisted of two different types: 1) trenches and 2) backfill material. Dose and risk modeling was performed for each of the 21 trench survey units using the default residential farmer scenario of 12 hours per day indoors and 6 hours per day outdoors occupancy provided in the most current version of RESRAD at the time of the modeling exercise. The backfill material and the trenches were modeled separately with input parameters using the larger of the MDL or reported activity concentrations. The results of the modeling efforts for the 21 trench survey units in Parcel UC3 fall within the acceptable NCP risk management range of 10^{-6} to 10^{-4}, which supports radiological free release. Based on the dose and risk modeling results, the highest net dose to workers or members of the public as a result of exposures to residual radioactive material in soil on Parcel UC3 was identified in TU182 at 6.088 mrem/y with an excess lifetime cancer risk of 9.672×10^{-5}.

The environmental ALARA process was implemented for each of the 21 trench survey units in addition to the dose and risk modeling efforts. ALARA analyses were performed based on recent estimates of dose to the public from HPNS operations. Based on qualitative ALARA analyses, excavation projects that could cause the potential dose to the public to exceed 1 millirem

ED_006787_00017608-00127

(individual) or 10 person-rem (collective) are subjected to quantitative ALARA analyses. To date, no operations at HPNS have resulted in an individual dose to the public greater than 1 mrem or a collective dose greater than 10 person-rem. Qualitative ALARA analyses did not result in any gamma measurements above the investigation levels, and none of the FSS sample results identified radioactivity above the release criteria for any ROC. In addition, air monitoring results did not exceed 10 percent of the derived air concentration and the processed personnel dosimetry badges did not identify a gamma dose above background levels.

Archaeological monitoring for the Parcel UC3 storm drain and sanitary sewer TCRA was performed in accordance with the final Archaeological Plan (TtEC 2009a). Monitoring activities were conducted along Crisp Road in August 2010 by qualified archaeologists and archaeological technicians. No cultural materials were observed during the monitoring activities and no cultural resources were encountered or disturbed during construction. Because no new resources were identified, no assessment or treatment actions were required.

Chemical contamination at HPNS is addressed through the IR Program process and is consistent with CERCLA as amended by SARA, and the NCP, to the extent practicable. There are a total of three IR Program sites associated with the Parcel UC3 storm drain and sanitary sewers. Samples of excavated soil derived from IR Program sites were collected and sent to the off-site laboratory for chemical analysis to verify whether the excavated material met the remediation criteria in accordance with the approved Execution Plan (TtEC 2010a). Based on the analytical results, soil that did not meet the appropriate criteria was stockpiled for collection and off-site disposal by the DON non-LLRW contractor, along with non-IR Program soil that exhibited odor or staining.

9.1 RECOMMENDATION

The objective of the TCRA was to protect the public health and welfare, and the environment from actual or potential releases of radiologic contaminants, prevent exposure to residual ROCs in concentrations that exceed remediation goals for the ingestion or inhalation exposure pathways, achieve radiological release for unrestricted use of Parcel UC3, and support preparation of the ROD. The DON achieved this objective. As demonstrated by the information presented in each of the SUPRs and summarized in this Radiological RACR, none of the 378 final systematic FSS soil samples collected from the 21 excavated trench survey units or the excavated soil survey units/imported fill used as backfill material identified the presence of residual radioactivity above the release criteria established in the AM (DON 2006) for any ROC. The laboratory analytical results for the final 18 systematic FSS soil samples were presented in each of the 21 SUPRs provided in Appendix F (Work Area 16 West), Appendix G (Work Area 16 Central), and Appendix H (Work Area 16 East).

ED_006787_00017608-00128

The information presented in this Radiological RACR and each of the 21 SUPRs confirms the DON's conclusion that the Parcel UC3 removal action resulted in a reduction of the potential risks to levels below remediation goals. Based on the results of the storm drain and sanitary sewer systems TCRA, residual dose and risk modeling efforts, and the implementation of the ALARA process presented in the SUPRs, the DON's stated objective was achieved. The documentation provided in this Radiological RACR supports preparation of the ROD and the Proposed Plan. Parcel UC3 is ready for unconditional, unrestricted radiological free release.

ED_006787_00017608-00129

This page intentionally left blank.

ED_006787_00017608-00130

10.0 REFERENCES

ASTM (American Society for Testing and Materials). 2008. Standard Test Method for In-Place Density and Water Content of Soil and Soil-Aggregate by Nuclear Methods (Shallow Depth). Standard Practice D6938 - 08a. ASTM International, West Conshohocken, Pennsylvania.

DoD (Department of Defense), Department of Energy, Nuclear Regulatory Commission, and U.S. Environmental Protection Agency. 2000. Multi-Agency Radiation Survey and Site Investigation Manual (MARSSIM), NUREG-1575, Revision 1. August.

DON (Department of the Navy). 2006. Final Base-wide Radiological Removal Action, Action Memorandum – Revision 2006, Hunters Point Shipyard, San Francisco, California.

————. 2008. Memorandum: Conceptual Site Model for the Removal of the Sanitary and Storm Sewers at Hunters Point Shipyard, San Francisco, California. December 11.

DOT (U.S. Department of Transportation, Federal Highway Administration). 2007. Manual on Uniform Traffic Control Devices for Streets and Highways, Revision 2.

EPA (U.S. Environmental Protection Agency). 2000. Radionuclides Notice of Data Availability Technical Support Document. Targeting and Analysis Branch, Standards and Risk Management Division, Office of Groundwater and Drinking Water, EPA. March.

Gahagan and Brian. 1993. Hunters Point Naval Shipyard, San Francisco, California – Base Map. 44 sheets. Prepared for the DON Western Division. November 1.

NAVSEA (Naval Sea Systems Command). 2004. Final Hunters Point Shipyard Historical Radiological Assessment, Volume II. August 31.

NRC (Nuclear Regulatory Commission). 1997. Minimum Detectable Concentrations with Typical Radiation Survey Instruments for Various Contaminants and Field Conditions. NUREG/CR-1507. Final.

————. 1998. A Nonparametric Statistical Methodology for the Design and Analysis of the Final Status Decommissioning Survey. NUREG-1505. Revision 1.

SFRA (San Francisco Redevelopment Agency). 1997. Hunters Point Shipyard Redevelopment Plan. July 14.

TtEC (Tetra Tech EC, Inc.). 2006a. Base-wide Storm Drain and Sanitary Sewer Removal Work Plan, Hunters Points Shipyard, San Francisco, California.

————. 2006b. Hunters Point Shipyard Project, Backfill Review and Acceptance Instruction, Revision 0. April 12.

————. 2007a. Final Project Work Plan, Revision 1. Base-wide Storm Drain and Sanitary Sewer Removal, Hunters Point Shipyard, San Francisco, California.

————. 2007b. Base-wide Radiological Work Plan, Revision 1. Hunters Point Shipyard, San Francisco, California. October 5.

———————. 2008a. Final Project Work Plan, Revision 2. Base-wide Storm Drain and Sanitary Sewer Removal, Hunters Point Shipyard, San Francisco, California. May 16.

———————. 2008b. Final Project Work Plan, Revision 3. Base-wide Storm Drain and Sanitary Sewer Removal, Hunters Point Shipyard, San Francisco, California. November 30.

———————. 2009a. Final Basewide Archaeological Monitoring and Discovery Plan. Hunters Point Naval Shipyard, San Francisco County, California. April.

———————. 2009b. Basewide Construction Specifications. Sanitary Sewer and Storm Drain Removal and Site Restoration, Hunters Point Shipyard, San Francisco, California. December 7.

———————. 2010a. Final Execution Plan. Crisp Road, Sanitary Sewer and Storm Drain Removal, Hunters Point Shipyard, San Francisco, California. January 25.

———————. 2010b. Final Project Work Plan, Revision 4. Base-Wide Storm Drain and Sanitary Sewer, Hunters Point Shipyard, San Francisco, California. July 30.

———————. 2011. Final Survey Unit Project Reports Abstract, Revision 3. Sanitary Sewer and Storm Drain Removal Project, Hunters Point Shipyard, San Francisco, California. July 7.

TtEMI (Tetra Tech EM, Inc.). 2000. Radiological Removal Action, Action Memorandum, HPS, San Francisco, California. August 17.

———————. 2001. Basewide Radiological Removal Action, Action Memorandum, HPS, San Francisco, California. November 19.

TABLES

This page intentionally left blank.

TABLE 2-1

RELEASE CRITERIA (ACTION MEMORANDUM)

Radionuclide	Surfaces			Soil[d] (pCi/g)				Water[h] (pCi/L)
	Equipment, Waste (dpm/100 cm^2)[a]	Structures (dpm/100 cm^2)[b]	Residual Dose (mrem/yr)[c]	Outdoor Worker (pCi/g)[e]	Residual Dose (mrem/yr)[c]	Residential (pCi/g)[e]	Residual Dose (mrem/yr)[c]	
Americium-241	100	100	18.7	5.67	0.8661	1.36	24.84	15
Cesium-137	5,000	5,000	1.72	0.113	0.2142	0.113	0.2561	119
Cobalt-60	5,000	5,000	6.01	0.0602	0.5164	0.0361	0.3918	100
Europium-152	5,000	5,000	3.21	0.13[f]	0.5018	0.13[f]	0.502	60
Europium-154	5,000	5,000	3.49	0.23[f]	0.9593	0.23[f]	0.9599	200
Plutonium-239	100	100	18.1	14.0	1.743	2.59	1.138	15
Radium-226	100	100	0.612	1.0[g]	6.342	1.0[g]	14.59	5[i]
Strontium-90	1,000	1,000	0.685	10.8	0.1931	0.331	1.648	8
Thorium-232	1,000	36.5	24.9	2.7	24.91	1.69	25	15
Tritium	5,000	5,000	0.00053	4.23	0.00179	2.28	0.05263	20,000
Uranium-235+D	5,000	488	25	0.398	0.178	0.195	0.8453	30

Reference: *Final Base-wide Radiological Removal Action, Action Memorandum - Revision 2006, Hunters Point Shipyard, San Francisco, CA (DON 2006).*

Notes:

[a] These limits are based on AEC *Regulatory Guide 1.86* (AEC 1974). Limits for removable surface activity are 20 percent of these values.

[b] These limits are based on 25 mrem/yr, using RESRAD-Build Version 3.3 or *Regulatory Guide 1.86* (AEC 1974), whichever is lower.

[c] The resulting dose is based on modeling using RESRAD-Build Version 3.3 or RESRAD Version 6.3, with radon pathways turned off.

[d] EPA PRGs for two future-use scenarios.

[e] The on-site and off-site laboratory will ensure that the MDA meets the listed release criteria by increasing sample size or counting time as necessary. The MDA is defined as the lowest net response level, in counts, that can be seen with a fixed level of certainty, customarily 95 percent. The MDA is calculated per sample by considering background counts, amount of sample used, and counting time.

[f] Based on EPA-decay corrected PRGs for commercial reuse and a previous action memorandum (TtEMI 2000 and 2001).

[g] Limit is 1 pCi/g above background, per agreement with EPA.

TABLE 2-1

RELEASE CRITERIA (ACTION MEMORANDUM)

Notes (Continued):

[h] Release criteria for water have been derived from Radionuclides Notice of Data Availability Technical Document, (EPA 2000) by comparing the limits from two criteria and using the most conservative limit.

[i] Limit is for total radium concentration.

Abbreviations and Acronyms:

AEC – Atomic Energy Commission
cm^2 – square centimeter
DON – U.S. Department of the Navy
dpm – disintegrations per minute
EPA – U.S. Environmental Protection Agency
MDA – minimum detectable activity
mrem/yr – millirems per year
pCi/g – picocuries per gram
pCi/L – picocuries per liter
PRG – preliminary remediation goal
TtEMI – Tetra Tech EM, Inc.

TABLE 2-2

STORM DRAIN AND SANITARY SEWER RELEASE CRITERIA (SURVEY UNIT PROJECT REPORTS ABSTRACT)

Radionuclide	Soil			
	Outdoor Worker (pCi/g)	Residual Dose (mrem/yr)[a]	Residential (pCi/g)	Residual Dose (mrem/yr)[a]
Cesium-137	0.113	0.2142	0.113	0.2561
Radium-226	1.0[b]	6.342	1.0[b]	14.59
Strontium-90	10.8	0.1931	0.331	1.648

***Reference*:** Table 2-2 of the SUPRA (TtEC 2011).

Notes:

a The resulting dose is based on modeling using RESRAD Version 6.3, with radon pathways turned off.

b Limit is 1 pCi/g above background, per agreement with EPA.

Abbreviations and Acronyms:

EPA – U.S. Environmental Protection Agency
mrem/yr – millirems per year
pCi/g – picocuries per gram
SUPRA – Survey Unit Project Reports Abstract
TtEC – Tetra Tech EC, Inc.

This page intentionally left blank.

TABLE 3-1

PARCEL UC3 TRENCH SURVEY UNIT DATA SUMMARY

Trench Survey Unit	Work Area	Associated Trench Segments	Surface Area (m^2)	Linear Feet	Total Soil Samples Collected	Elevated ROC	Elevated Soil Samples (pCi/g)	Total Soil Volume Remediated (cy)	Survey Unit Backfill Data				Comments	Net Residual Dose/Risk	Recommendation
									Backfill Material Source	Estimated Backfill Quantity (cy)	Date RASO Concurred	Date Backfill Complete			
TU166	16 West	03-E16-00-1B 03-E16-00-1D 03-E16-00-2E 03-E16-00-2P 03-E16-00-2T 03-E16-00-3J 03-E16-00-8A 03-E16-56-2P 03-E16-56-2T 03-E16-56-3J 03-E16-56-8A	255	134	24	NA	NA	0	Imported fill	186	21-May-10	28-Jun-10	A total of six investigative soil samples were collected based on the presence of Cs-137 contamination in two pipe sediment samples.	Modeling using the larger of the MDL or reported activity resulted in a net residual dose of 3.356 mrem/y with an increased cancer risk of 6.245×10^{-5} for the backfill material and 2.501 mrem/y with an increased cancer risk of 4.571×10^{-5} for the trench unit.	By achieving the release criteria and based on the modeled net residual dose and risk, no further radiological action is recommended.
TU169	16 East	03-E16-00-1K 03-E16-00-3I 03-E16-00-3J 03-E16-00-3M 03-E16-00-3N 03-E16-00-8B 03-E16-00-8C	973	962	98	Cs-137 Ra-226	0.12702 0.17749 1.5023 to 4.1008	554	ES-271 and Imported fill	560	4-Aug-10	10-Aug-10	A total of five investigative soil samples were collected based on the presence of Cs-137 contamination in one pipe and two manhole sediment samples.	Modeling using the larger of the MDL or reported activity resulted in a net residual dose of 5.43 mrem/y with an increased cancer risk of 8.510×10^{-5} for the backfill material and 1.461 mrem/y with an increased cancer risk of 2.063×10^{-5} for the trench unit.	By achieving the release criteria and based on the modeled net residual dose and risk, no further radiological action is recommended.
TU170	16 Central	03-E16-00-1K 03-E16-00-1W 03-E16-00-1X 03-E16-00-1Y 03-E16-00-1Z 03-E16-00-2F 03-E16-00-2P 03-E16-00-8C 03-E16-00-8D 03-E16-00-8E 03-E16-00-8F 03-E16-00-8I 03-E16-00-8K	751	700	30	Ra-226	1.5028 2.0407 2.1485 2.8570	534	Imported fill	481	5-Aug-10	9-Aug-10	A total of three investigative soil samples were collected based on trench scan results.	Modeling using the larger of the MDL or reported activity resulted in a net residual dose of 5.685 mrem/y with an increased cancer risk of 9.306×10^{-5} for the backfill material and 0.9309 mrem/y with an increased cancer risk of 1.293×10^{-5} for the trench unit.	By achieving the release criteria and based on the modeled net residual dose and risk, no further radiological action is recommended.

TABLE 3-1

PARCEL UC3 TRENCH SURVEY UNIT DATA SUMMARY

Trench Survey Unit	Work Area	Associated Trench Segments	Surface Area (m^2)	Linear Feet	Total Soil Samples Collected	Elevated ROC	Elevated Soil Samples (pCi/g)	Total Soil Volume Remediated (cy)	Survey Unit Backfill Data				Comments	Net Residual Dose/Risk	Recommendation
									Backfill Material Source	Estimated Backfill Quantity (cy)	Date RASO Concurred	Date Backfill Complete			
TU172	16 West	03-E16-00-1Y 03-E16-00-8F 03-E16-00-8G 03-E16-00-8H 03-E16-00-8J	314	313	18	NA	NA	0	Imported fill	161	23-Jun-10	7-Jul-10	NA	Modeling using the larger of the MDL or reported activity resulted in a net residual dose of 3.643 mrem/y with an increased cancer risk of 6.631×10^{-5} for the backfill material and 0.8232 mrem/y with an increased cancer risk of 1.343×10^{-5} for the trench unit.	By achieving the release criteria and based on the modeled net residual dose and risk, no further radiological action is recommended.
TU173	16 West	03-E16-00-1J 03-E16-00-1P 03-E16-00-1Q 03-E16-00-1R 03-E16-00-2A	694	485	18	NA	NA	0	ES-281 ES-284 and Imported fill	555	1-Sep-10	28-Jan-11	NA	Modeling using the larger of the MDL or reported activity resulted in a net residual dose of 3.074 mrem/y with an increased cancer risk of 5.018×10^{-5} for the backfill material and 1.211 mrem/y with an increased cancer risk of 1.870×10^{-5} for the trench unit.	By achieving the release criteria and based on the modeled net residual dose and risk, no further radiological action is recommended.
TU174	16 East	03-E16-00-3L 03-E16-74-1A 03-E16-74-2R 03-E16-74-3C 03-E16-74-3G 03-E16-74-3J 03-E16-74-8A	472	376	18	NA	NA	0	ES-294 ES-295 and Imported fill	375	3-Nov-10	2-Dec-10	NA	Modeling using the larger of the MDL or reported activity resulted in a net residual dose of 2.803 mrem/y with an increased cancer risk of 4.787×10^{-5} for the backfill material and 0.5389 mrem/y with an increased cancer risk of 7.922×10^{-6} for the trench unit.	By achieving the release criteria and based on the modeled net residual dose and risk, no further radiological action is recommended.

TABLE 3-1

PARCEL UC3 TRENCH SURVEY UNIT DATA SUMMARY

Trench Survey Unit	Work Area	Associated Trench Segments	Surface Area (m^2)	Linear Feet	Total Soil Samples Collected	Elevated ROC	Elevated Soil Samples (pCi/g)	Total Soil Volume Remediated (cy)	Survey Unit Backfill Data				Comments	Net Residual Dose/Risk	Recommendation
									Backfill Material Source	Estimated Backfill Quantity (cy)	Date RASO Concurred	Date Backfill Complete			
TU175	16 Central	03-E16-00-2B 03-E16-00-2D 03-E16-00-2E 03-E16-00-2F 03-E16-00-2G 03-E16-00-8I 03-E16-00-8L	908	378	39	Ra-226	1.6068	2	ES-319 ES-320 and Imported fill	1,333	17-Nov-10	20-Jan-11	NA	Modeling using the larger of the MDL or reported activity resulted in a net residual dose of 5.505 mrem/y with an increased cancer risk of 8.755×10^{-5} for the backfill material and 1.638 mrem/y with an increased cancer risk of 2.379×10^{-5} for the trench unit.	By achieving the release criteria and based on the modeled net residual dose and risk, no further radiological action is recommended.
TU176	16 Central	03-E16-00-2G 03-E16-00-2O 03-E16-00-2V 03-E16-00-3A	913	335	18	NA	NA	0	ES-281 ES-285 ES-300 and Imported fill	1,295	9-Nov-10	25-Jan-11	NA	Modeling using the larger of the MDL or reported activity resulted in a net residual dose of 6.008 mrem/y with an increased cancer risk of 9.545×10^{-5} for the backfill material and 0.7256 mrem/y with an increased cancer risk of 9.434×10^{-6} for the trench unit.	By achieving the release criteria and based on the modeled net residual dose and risk, no further radiological action is recommended.
TU177	16 West	03-E16-00-1A 03-E16-00-8M	906	290	18	NA	NA	0	ES-313 ES-316 and Imported fill	1,275	28-Oct-10	28-Jan-11	NA	Modeling using the larger of the MDL or reported activity resulted in a net residual dose of 5.65 mrem/y with an increased cancer risk of 8.950×10^{-5} for the backfill material and 4.655 mrem/y with an increased cancer risk of 7.342×10^{-5} for the trench unit.	By achieving the release criteria and based on the modeled net residual dose and risk, no further radiological action is recommended.

TABLE 3-1

PARCEL UC3 TRENCH SURVEY UNIT DATA SUMMARY

Trench Survey Unit	Work Area	Associated Trench Segments	Surface Area (m^2)	Linear Feet	Total Soil Samples Collected	Elevated ROC	Elevated Soil Samples (pCi/g)	Total Soil Volume Remediated (cy)	Survey Unit Backfill Data				Comments	Net Residual Dose/Risk	Recommendation
									Backfill Material Source	Estimated Backfill Quantity (cy)	Date RASO Concurred	Date Backfill Complete			
TU178	16 West	03-E16-00-1A 03-E16-00-1B 03-E16-00-1C 03-E16-00-1D 03-E16-00-8M 03-E16-00-8N	900	394	29	NA	NA	0	ES-287 ES-288 ES-299 and Imported fill	1,297	20-Oct-10	28-Jan-11	A total of 11 investigative soil samples were collected based on Cs-137 contamination in one pipe sediment sample.	Modeling using the larger of the MDL or reported activity resulted in a net residual dose of 5.26 mrem/y with an increased cancer risk of 8.342×10^{-5} for the backfill material and 3.19 mrem/y with an increased cancer risk of 4.802×10^{-5} for the trench unit.	By achieving the release criteria and based on the modeled net residual dose and risk, no further radiological action is recommended.
TU179	16 West	03-E16-00-1C 03-E16-00-1E 03-E16-00-1F 03-E16-00-1G 03-E16-00-1H 03-E16-00-2W 03-E16-00-8M 03-E16-00-8O	850	517	18	NA	NA	0	ES-296 ES-297 and Imported fill	1,439	19-Oct-10	28-Jan-11	NA	Modeling using the larger of the MDL or reported activity resulted in a net residual dose of 5.08 mrem/y with an increased cancer risk of 8.139×10^{-5} for the backfill material and 3.125 mrem/y with an increased cancer risk of 4.862×10^{-5} for the trench unit.	By achieving the release criteria and based on the modeled net residual dose and risk, no further radiological action is recommended.
TU180	16 West	03-E16-00-1F 03-E16-00-1H 03-E16-00-8M	857	555	18	NA	NA	0	ES-287 and Imported fill	694	29-Sep-10	20-Oct-10	NA	Modeling using the larger of the MDL or reported activity resulted in a net residual dose of 5.629 mrem/y with an increased cancer risk of 9.043×10^{-5} for the backfill material and 0.9581 mrem/y with an increased cancer risk of 1.380×10^{-5} for the trench unit.	By achieving the release criteria and based on the modeled net residual dose and risk, no further radiological action is recommended.

TABLE 3-1

PARCEL UC3 TRENCH SURVEY UNIT DATA SUMMARY

Trench Survey Unit	Work Area	Associated Trench Segments	Surface Area (m^2)	Linear Feet	Total Soil Samples Collected	Elevated ROC	Elevated Soil Samples (pCi/g)	Total Soil Volume Remediated (cy)	Survey Unit Backfill Data				Comments	Net Residual Dose/Risk	Recommendation
									Backfill Material Source	Estimated Backfill Quantity (cy)	Date RASO Concurred	Date Backfill Complete			
TU181	16 West	03-E16-00-1F 03-E16-00-H 03-E16-00-1P 03-E16-00-1Q 03-E16-00-1R 03-E16-00-1S 03-E16-00-1T 03-E16-00-1Z 03-E16-00-2B 03-E16-00-8K 03-E16-00-8M	893	710	18	NA	NA	0	ES-293 and Imported fill	1,010	30-Sep-10	20-Oct-10	NA	Modeling using the larger of the MDL or reported activity resulted in a net residual dose of 5.81 mrem/y with an increased cancer risk of 9.277×10^{-5} for the backfill material and 1.529 mrem/y with an increased cancer risk of 2.229×10^{-5} for the trench unit.	By achieving the release criteria and based on the modeled net residual dose and risk, no further radiological action is recommended.
TU182	16 Central	03-E16-00-1H 03-E16-00-2A 03-E16-00-2C 03-E16-00-2D 03-E16-00-2E 03-E16-00-8L 03-E16-00-8M 03-E16-00-8P	929	504	18	NA	NA	0	ES-323 and Imported fill	1,173	22-Nov-10	21-Jan-11	NA	Modeling using the larger of the MDL or reported activity resulted in a net residual dose of 6.088 mrem/y with an increased cancer risk of 9.672×10^{-5} for the backfill material and 2.709 mrem/y with an increased cancer risk of 4.131×10^{-5} for the trench unit.	By achieving the release criteria and based on the modeled net residual dose and risk, no further radiological action is recommended.

TABLE 3-1

PARCEL UC3 TRENCH SURVEY UNIT DATA SUMMARY

Trench Survey Unit	Work Area	Associated Trench Segments	Surface Area (m^2)	Linear Feet	Total Soil Samples Collected	Elevated ROC	Elevated Soil Samples (pCi/g)	Total Soil Volume Remediated (cy)	Survey Unit Backfill Data				Comments	Net Residual Dose/Risk	Recommendation
									Backfill Material Source	Estimated Backfill Quantity (cy)	Date RASO Concurred	Date Backfill Complete			
TU183	16 Central	03-E16-00-1H 03-E16-00-2C 03-E16-00-2N 03-E16-00-2O 03-E16-00-2S 03-E16-00-2T 03-E16-00-3A 03-E16-00-3B 03-E16-00-3D 03-E16-00-8M 03-E16-74-2J 03-E16-74-2L 03-E16-74-2M 03-E16-74-2Q 03-E16-74-2S	891	425	18	NA	NA	0	ES-288 ES-303 and Imported fill	1,394	24-Nov-10	25-Jan-11	NA	Modeling using the larger of the MDL or reported activity resulted in a net residual dose of 5.459 mrem/y with an increased cancer risk of 8.691×10^{-5} for the backfill material and 1.76 mrem/y with an increased cancer risk of 2.608×10^{-5} for the trench unit.	By achieving the release criteria and based on the modeled net residual dose and risk, no further radiological action is recommended.
TU184	16 East	03-E16-00-1H 03-E16-00-2U 03-E16-00-3A 03-E16-00-3D 03-E16-00-3E 03-E16-00-3H 03-E16-00-3I 03-E16-56-2U 03-E16-74-3C 03-E16-74-3F	918	409	18	NA	NA	0	ES-310 ES-315 ES-316 ES-320 ES-326 and Imported fill	1,303	6-Dec-10	18-Jan-11	NA	Modeling using the larger of the MDL or reported activity resulted in a net residual dose of 5.218 mrem/y with an increased cancer risk of 8.234×10^{-5} for the backfill material and 1.824 mrem/y with an increased cancer risk of 2.559×10^{-5} for the trench unit.	By achieving the release criteria and based on the modeled net residual dose and risk, no further radiological action is recommended.

TABLE 3-1

PARCEL UC3 TRENCH SURVEY UNIT DATA SUMMARY

Trench Survey Unit	Work Area	Associated Trench Segments	Surface Area (m^2)	Linear Feet	Total Soil Samples Collected	Elevated ROC	Elevated Soil Samples (pCi/g)	Total Soil Volume Remediated (cy)	Survey Unit Backfill Data				Comments	Net Residual Dose/Risk	Recommendation
									Backfill Material Source	Estimated Backfill Quantity (cy)	Date RASO Concurred	Date Backfill Complete			
TU185	16 East	03-E16-00-4P 03-E16-00-5A 03-E16-00-5B 03-E16-00-5C 03-E16-00-5D 03-E16-00-5E 03-E16-00-5F 03-E16-00-5G 03-E16-00-5H 03-E16-00-5I 03-E16-00-5J 03-E16-00-5K 03-E16-00-5L	814	301	18	NA	NA	0	ES-298 ES-304 ES-310 and Imported fill	1,814	27-Oct-10	18-Nov-10	NA	Modeling using the larger of the MDL or reported activity resulted in a net residual dose of 5.078 mrem/y with an increased cancer risk of 8.156×10^{-5} for the backfill material and 2.534 mrem/y with an increased cancer risk of 3.780×10^{-5} for the trench unit.	By achieving the release criteria and based on the modeled net residual dose and risk, no further radiological action is recommended.
TU187	16 East	03-E16-00-1H 03-E16-00-3E 03-E16-00-3I 03-E16-00-3J 03-E16-00-3K 03-E16-00-3L 03-E16-00-3O 03-E16-00-3R 03-E16-00-4A 03-E16-00-8A 03-E16-00-8Q	757	376	19	NA	NA	0	ES-307 ES-309 and Imported fill	987	6-Jan-11	18-Jan-11	One investigative soil sample was collected due to the presence of Cs-137 contamination identified in a pipe sediment sample removed from adjacent TU166.	Modeling using the larger of the MDL or reported activity resulted in a net residual dose of 5.101 mrem/y with an increased cancer risk of 8.304×10^{-5} for the backfill material and 0.9596 mrem/y with an increased cancer risk of 1.239×10^{-5} for the trench unit.	By achieving the release criteria and based on the modeled net residual dose and risk, no further radiological action is recommended.

TABLE 3-1

PARCEL UC3 TRENCH SURVEY UNIT DATA SUMMARY

Trench Survey Unit	Work Area	Associated Trench Segments	Surface Area (m^2)	Linear Feet	Total Soil Samples Collected	Elevated ROC	Elevated Soil Samples (pCi/g)	Total Soil Volume Remediated (cy)	Survey Unit Backfill Data				Comments	Net Residual Dose/Risk	Recommendation
									Backfill Material Source	Estimated Backfill Quantity (cy)	Date RASO Concurred	Date Backfill Complete			
TU188	16 East	03-E16-00-1H 03-E16-00-3M 03-E16-00-4D 03-E16-00-4E 03-E16-00-4F 03-E16-00-4G 03-E16-00-4H 03-E16-00-4M 03-E16-00-4N 03-E16-00-4O 03-E16-00-4P 03-E16-00-5A 03-E16-04-4G	870	453	19	NA	NA	0	ES-293 ES-305 ES-318 and Imported fill	1,331	8-Nov-10	18-Nov-10	One investigative soil sample was collected due to the presence of Cs-137 contamination identified in sediment samples collected from adjacent TU169 piping.	Modeling using the larger of the MDL or reported activity resulted in a net residual dose of 5.446 mrem/y with an increased cancer risk of 8.683×10^{-5} for the backfill material and 2.615 mrem/y with an increased cancer risk of 3.938×10^{-5} for the trench unit.	By achieving the release criteria and based on the modeled net residual dose and risk, no further radiological action is recommended.
TU189	16 East	03-E16-00-1H 03-E16-00-3E 03-E16-00-3Q 03-E16-00-4A 03-E16-00-4B 03-E16-00-4C	623	345	18	NA	NA	0	ES-322 and Imported fill	659	6-Dec-10	11-Jan-11	NA	Modeling using the larger of the MDL or reported activity resulted in a net residual dose of 4.599 mrem/y with an increased cancer risk of 7.650×10^{-5} for the backfill material and 0.5024 mrem/y with an increased cancer risk of 6.556×10^{-6} for the trench unit.	By achieving the release criteria and based on the modeled net residual dose and risk, no further radiological action is recommended.

TABLE 3-1

PARCEL UC3 TRENCH SURVEY UNIT DATA SUMMARY

Trench Survey Unit	Work Area	Associated Trench Segments	Surface Area (m^2)	Linear Feet	Total Soil Samples Collected	Elevated ROC	Elevated Soil Samples (pCi/g)	Total Soil Volume Remediated (cy)	Survey Unit Backfill Data				Comments	Net Residual Dose/Risk	Recommendation
									Backfill Material Source	Estimated Backfill Quantity (cy)	Date RASO Concurred	Date Backfill Complete			
TU190	16 East	03-E16-00-1H 03-E16-00-3N 03-E16-00-4B 03-E16-00-4D 03-E16-00-8B	580	250	22	NA	NA	0	ES-312 and Imported fill	635	6-Jan-11	11-Jan-11	Four investigative soil samples were collected and analyzed due to the presence of Cs-137 contamination in sediment samples collected from adjacent TU169 piping.	Modeling using the larger of the MDL or reported activity resulted in a net residual dose of 4.59 mrem/y with an increased cancer risk of 7.748×10^{-5} for the backfill material and 0.5835 mrem/y with an increased cancer risk of 7.559×10^{-6} for the trench unit.	By achieving the release criteria and based on the modeled net residual dose and risk, no further radiological action is recommended.

Notes:

[a] Mills Peninsula Hospital imported fill

Abbreviations and Acronyms:

Cs-137 – cesium-137
cy – cubic yard
EPA – U.S. Environmental Protection Agency
ES – Excavated Soil Survey Unit
LLRW – low-level radioactive waste
m^2 – square meter
MDL – method detection limit
MH – manhole
mrem/y – millirems per year
NA – not applicable
pCi/g – picocuries per gram
Ra-226 – radium-226
RASO – Radiological Affairs Support Office
ROC – radionuclide of concern
TU – Trench Survey Unit

This page intentionally left blank.

TABLE 3-2

PARCEL UC3 SURVEY UNITS AND ASSOCIATED TRENCH SEGMENT DATA

Trench Survey Unit	Trench Segment Identification Number	Segment Type	Pipe Material	Pipe Diameter (inches)	Minimum Pipe Depth (feet)	Maximum Pipe Depth (feet)	Minimum Trench Depth (feet)	Maximum Trench Depth (feet)
TU166	03-E16-00-1B	Sanitary Sewer	VCP	6	6	6	7	7
TU166	03-E16-00-1D	Storm Drain	Concrete	16	5	5	6	6
TU166	03-E16-00-2E	Sanitary Sewer	CIP	8	3	4	4	5
TU166	03-E16-00-2P	Storm Drain	Concrete	18	5	6	6	7
TU166	03-E16-00-2T	Storm Drain	VCP	8	6	6	7	7
TU166	03-E16-00-3J	Storm Drain	Concrete	16	9	9	11	11
TU166	03-E16-00-8A	Storm Drain	Concrete	16	9	9	11	11
TU166	03-E16-56-2P	Storm Drain	Concrete	18	5	6	6	7
TU166	03-E16-56-2T	Storm Drain	VCP	8	6	6	7	7
TU166	03-E16-56-3J	Storm Drain	Concrete	16	9	9	11	11
TU166	03-E16-56-8A	Storm Drain	Concrete	16	9	9	11	11
TU169	03-E16-00-1K	Storm Drain	CIP	4	2	4	2	4
TU169	03-E16-00-3I	Storm Drain	Concrete	16	9	9	11	11
TU169	03-E16-00-3J	Storm Drain	Concrete	16	9	9	11	11
TU169	03-E16-00-3M	Storm Drain	CIP	4	6	6	6	6
TU169	03-E16-00-3N	Storm Drain	CIP	4	2	3	3	4
TU169	03-E16-00-8B	Storm Drain	CIP	4	2	3	3	4
TU169	03-E16-00-8C	Storm Drain	CIP	4	2	4	2	4
TU170	03-E16-00-1K	Storm Drain	CIP	4	4	4	4	4
TU170	03-E16-00-1W	Storm Drain	CIP	4	2	4	3	4
TU170	03-E16-00-1X	Storm Drain	CIP	4	3	3	3	4
TU170	03-E16-00-1Y	Storm Drain	CIP	4	3	3	3	3
TU170	03-E16-00-1Z	Storm Drain	Concrete	14	7	7	8	8

TABLE 3-2

PARCEL UC3 SURVEY UNITS AND ASSOCIATED TRENCH SEGMENT DATA

Trench Survey Unit	Trench Segment Identification Number	Segment Type	Pipe Material	Pipe Diameter (inches)	Minimum Pipe Depth (feet)	Maximum Pipe Depth (feet)	Minimum Trench Depth (feet)	Maximum Trench Depth (feet)
TU170	03-E16-00-2F	Storm Drain	Concrete	14	3	7	4	8
TU170	03-E16-00-2P	Storm Drain	Concrete	18	6	6	7	7
TU170	03-E16-00-8C	Storm Drain	CIP	4	4	4	4	4
TU170	03-E16-00-8D	Storm Drain	CIP	4	2	4	3	4
TU170	03-E16-00-8E	Storm Drain	CIP	4	3	3	3	4
TU170	03-E16-00-8F	Storm Drain	CIP	4	3	3	3	3
TU170	03-E16-00-8I	Storm Drain	Concrete	14	3	7	4	8
TU170	03-E16-00-8K	Storm Drain	VCP	6	3	5	4	6
TU172	03-E16-00-1Y	Storm Drain	CIP	4	3	3	3	3
TU172	03-E16-00-8F	Storm Drain	CIP	4	3	3	3	3
TU172	03-E16-00-8G	Storm Drain	CIP	4	3	3	3	4
TU172	03-E16-00-8H	Storm Drain	CIP	4	3	3	3	4
TU172	03-E16-00-8J	Storm Drain	CIP	4	3	4	3	4
TU173	03-E16-00-1J	Sanitary Sewer	VCP	4	3	5	3	5
TU173	03-E16-00-1P	Storm Drain	VCP	4	4	5	4	5
TU173	03-E16-00-1Q	Storm Drain	VCP	4	4	5	4	5
TU173	03-E16-00-1R	Storm Drain	Concrete	6	5	6	5	6
TU173	03-E16-00-2A	Sanitary Sewer	VCP	6	7	7	7	7
TU174	03-E16-00-3L	Storm Drain	Concrete	15	5	6	6	7
TU174	03-E16-74-1A	Storm Drain	Concrete	15	7	7	9	9
TU174	03-E16-74-2R	Storm Drain	VCP	15	5	5	7	7
TU174	03-E16-74-3C	Storm Drain	VCP	15	4	6	5	8
TU174	03-E16-74-3G	Sanitary Sewer	CIP	4	3	3	4	4

TABLE 3-2

PARCEL UC3 SURVEY UNITS AND ASSOCIATED TRENCH SEGMENT DATA

Trench Survey Unit	Trench Segment Identification Number	Segment Type	Pipe Material	Pipe Diameter (inches)	Minimum Pipe Depth (feet)	Maximum Pipe Depth (feet)	Minimum Trench Depth (feet)	Maximum Trench Depth (feet)
TU174	03-E16-74-3J	Storm Drain	Concrete	15	5	5	6	6
TU174	03-E16-74-8A	Storm Drain	Concrete	15	7	7	9	9
TU175	03-E16-00-2B	Storm Drain	Concrete	24	7	9	9	11
TU175	03-E16-00-2D	Storm Drain	Concrete	14	11	11	12	12
TU175	03-E16-00-2E	Sanitary Sewer	CIP	8	4	4	5	5
TU175	03-E16-00-2F	Storm Drain	Concrete	14	11	11	12	12
TU175	03-E16-00-2G	Storm Drain	Concrete	24	9	10	11	12
TU175	03-E16-00-8I	Storm Drain	Concrete	14	11	11	12	12
TU175	03-E16-00-8L	Storm Drain	Concrete	14	11	11	12	12
TU176	03-E16-00-2G	Storm Drain	Concrete	24	9	10	11	12
TU176	03-E16-00-2O	Storm Drain	Concrete	14	11	11	12	12
TU176	03-E16-00-2V	Storm Drain	Concrete	14	11	11	12	12
TU176	03-E16-00-3A	Storm Drain	Concrete	24	10	10	12	12
TU177	03-E16-00-1A	Sanitary Sewer	Concrete	33	8	12	11	15
TU177	03-E16-00-8M	Sanitary Sewer	DIP	16	10	13	11	15
TU178	03-E16-00-1A	Sanitary Sewer	Concrete	33	12	13	15	16
TU178	03-E16-00-1B	Sanitary Sewer	VCP	6	7	7	7	7
TU178	03-E16-00-1C	Sanitary Sewer	Concrete	33	12	13	15	16
TU178	03-E16-00-1D	Storm Drain	Concrete	16	3	6	4	7
TU178	03-E16-00-8M	Sanitary Sewer	DIP	16	13	15	15	16
TU178	03-E16-00-8N	Storm Drain	VCP	8	3	3	4	4
TU179	03-E16-00-1C	Sanitary Sewer	Concrete	33	8	11	11	14
TU179	03-E16-00-1E	Storm Drain	Concrete	18	6	6	7	8

TABLE 3-2

PARCEL UC3 SURVEY UNITS AND ASSOCIATED TRENCH SEGMENT DATA

Trench Survey Unit	Trench Segment Identification Number	Segment Type	Pipe Material	Pipe Diameter (inches)	Minimum Pipe Depth (feet)	Maximum Pipe Depth (feet)	Minimum Trench Depth (feet)	Maximum Trench Depth (feet)
TU179	03-E16-00-1F	Storm Drain	Concrete	18	6	7	7	8
TU179	03-E16-00-1G	Storm Drain	VCP	8	12	12	13	13
TU179	03-E16-00-1H	Sanitary Sewer	Concrete	24	6	6	8	8
TU179	03-E16-00-2W	Storm Drain	CIP	6	4	10	5	10
TU179	03-E16-00-8M	Sanitary Sewer	DIP	16	2	13	4	14
TU179	03-E16-00-8O	Storm Drain	VCP	8	5	9	6	10
TU180	03-E16-00-1F	Storm Drain	Concrete	18	6	7	7	9
TU180	03-E16-00-1H	Sanitary Sewer	Concrete	24	5	6	7	8
TU180	03-E16-00-8M	Sanitary Sewer	DIP	16	4	4	5	5
TU181	03-E16-00-1F	Storm Drain	Concrete	18	7	9	9	10
TU181	03-E16-00-1H	Sanitary Sewer	Concrete	24	4	5	6	7
TU181	03-E16-00-1P	Storm Drain	VCP	4	8	8	8	8
TU181	03-E16-00-1Q	Storm Drain	VCP	4	8	8	8	8
TU181	03-E16-00-1R	Storm Drain	Concrete	6	8	8	8	8
TU181	03-E16-00-1S	Storm Drain	VCP	6	8	8	8	8
TU181	03-E16-00-1T	Storm Drain	Concrete	12	7	8	8	9
TU181	03-E16-00-1Z	Storm Drain	Concrete	14	7	7	8	8
TU181	03-E16-00-2B	Storm Drain	Concrete	24	8	8	10	10
TU181	03-E16-00-8K	Storm Drain	VCP	6	8	9	8	9
TU181	03-E16-00-8M	Sanitary Sewer	DIP	16	4	4	5	5
TU182	03-E16-00-1H	Sanitary Sewer	Concrete	24	2	5	4	7
TU182	03-E16-00-2A	Sanitary Sewer	VCP	6	5	5	5	6
TU182	03-E16-00-2C	Sanitary Sewer	VCP	6	5	7	5	7

TABLE 3-2

PARCEL UC3 SURVEY UNITS AND ASSOCIATED TRENCH SEGMENT DATA

Trench Survey Unit	Trench Segment Identification Number	Segment Type	Pipe Material	Pipe Diameter (inches)	Minimum Pipe Depth (feet)	Maximum Pipe Depth (feet)	Minimum Trench Depth (feet)	Maximum Trench Depth (feet)
TU182	03-E16-00-2D	Storm Drain	Concrete	14	7	8	8	9
TU182	03-E16-00-2E	Sanitary Sewer	CIP	8	3	6	4	7
TU182	03-E16-00-8L	Storm Drain	Concrete	14	7	8	8	9
TU182	03-E16-00-8M	Sanitary Sewer	DIP	16	3	6	4	7
TU182	03-E16-00-8P	Storm Drain	VCP	6	12	12	12	12
TU183	03-E16-00-1H	Sanitary Sewer	Concrete	24	5	6	7	8
TU183	03-E16-00-2C	Sanitary Sewer	VCP	6	7	8	7	8
TU183	03-E16-00-2N	Storm Drain	VCP	6	5	5	5	5
TU183	03-E16-00-2O	Storm Drain	Concrete	14	4	4	5	5
TU183	03-E16-00-2S	Sanitary Sewer	VCP	6	5	5	5	5
TU183	03-E16-00-2T	Storm Drain	VCP	8	6	6	7	7
TU183	03-E16-00-3A	Storm Drain	Concrete	24	10	10	12	12
TU183	03-E16-00-3B	Sanitary Sewer	VCP	8	6	6	7	7
TU183	03-E16-00-3D	Sanitary Sewer	VCP	8	7	8	8	9
TU183	03-E16-00-8M	Sanitary Sewer	DIP	16	6	7	7	8
TU183	03-E16-74-2J	Storm Drain	VCP	6	3	5	3	5
TU183	03-E16-74-2L	Storm Drain	CIP	4	5	5	5	5
TU183	03-E16-74-2M	Storm Drain	Concrete	14	4	4	5	5
TU183	03-E16-74-2Q	Sanitary Sewer	VCP	6	5	5	5	5
TU183	03-E16-74-2S	Sanitary Sewer	VCP	6	5	5	5	5
TU184	03-E16-00-1H	Sanitary Sewer	Concrete	24	6	6	8	8
TU184	03-E16-00-2U	Storm Drain	Concrete	24	6	10	8	12
TU184	03-E16-00-3A	Storm Drain	Concrete	24	6	6	8	8

TABLE 3-2

PARCEL UC3 SURVEY UNITS AND ASSOCIATED TRENCH SEGMENT DATA

Trench Survey Unit	Trench Segment Identification Number	Segment Type	Pipe Material	Pipe Diameter (inches)	Minimum Pipe Depth (feet)	Maximum Pipe Depth (feet)	Minimum Trench Depth (feet)	Maximum Trench Depth (feet)
TU184	03-E16-00-3D	Sanitary Sewer	VCP	8	7	7	8	8
TU184	03-E16-00-3E	Sanitary Sewer	VCP	8	8	8	9	9
TU184	03-E16-00-3H	Sanitary Sewer	CIP	4	3	3	4	4
TU184	03-E16-00-3I	Storm Drain	Concrete	16	4	4	6	6
TU184	03-E16-56-2U	Storm Drain	Concrete	24	10	10	12	12
TU184	03-E16-74-3C	Storm Drain	VCP	15	6	7	8	8
TU184	03-E16-74-3F	Storm Drain	CIP	8	7	7	8	8
TU185	03-E16-00-4P	Storm Drain	VCP	12	6	6	7	7
TU185	03-E16-00-5A	Storm Drain	Concrete	10	6	6	7	7
TU185	03-E16-00-5B	Storm Drain	VCP	8	6	6	7	7
TU185	03-E16-00-5C	Storm Drain	Concrete	10	7	7	8	8
TU185	03-E16-00-5D	Sanitary Sewer	VCP	10	7	7	8	8
TU185	03-E16-00-5E	Storm Drain	Concrete	21	6	6	8	8
TU185	03-E16-00-5F	Sanitary Sewer	VCP	10	7	12	8	13
TU185	03-E16-00-5G	Storm Drain	VCP	15	6	13	7	14
TU185	03-E16-00-5H	Sanitary Sewer	Concrete	18	13	17	14	18
TU185	03-E16-00-5I	Sanitary Sewer	VCP	24	9	11	11	13
TU185	03-E16-00-5J	Storm Drain	Concrete	10	6	8	7	9
TU185	03-E16-00-5K	Storm Drain	Concrete	10	7	8	8	9
TU185	03-E16-00-5L	Storm Drain	VCP	8	5	5	6	6
TU187	03-E16-00-1H	Sanitary Sewer	Concrete	24	7	8	9	10
TU187	03-E16-00-3E	Sanitary Sewer	VCP	8	8	9	9	10
TU187	03-E16-00-3I	Storm Drain	Concrete	16	4	4	5	5

TABLE 3-2

PARCEL UC3 SURVEY UNITS AND ASSOCIATED TRENCH SEGMENT DATA

Trench Survey Unit	Trench Segment Identification Number	Segment Type	Pipe Material	Pipe Diameter (inches)	Minimum Pipe Depth (feet)	Maximum Pipe Depth (feet)	Minimum Trench Depth (feet)	Maximum Trench Depth (feet)
TU187	03-E16-00-3J	Storm Drain	Concrete	16	9	9	11	11
TU187	03-E16-00-3K	Storm Drain	Concrete	15	4	9	5	10
TU187	03-E16-00-3L	Storm Drain	Concrete	15	4	6	5	7
TU187	03-E16-00-3O	Storm Drain	Concrete	15	6	6	8	8
TU187	03-E16-00-3R	Storm Drain	CIP	4	5	5	5	5
TU187	03-E16-00-4A	Storm Drain	VCP	12	4	7	5	8
TU187	03-E16-00-8A	Storm Drain	Concrete	16	9	9	11	11
TU187	03-E16-00-8Q	Storm Drain	Concrete	15	4	9	5	10
TU188	03-E16-00-1H	Sanitary Sewer	Concrete	24	8	11	10	13
TU188	03-E16-00-3M	Storm Drain	CIP	4	5	5	5	5
TU188	03-E16-00-4D	Sanitary Sewer	VCP	10	9	9	10	10
TU188	03-E16-00-4E	Sanitary Sewer	VCP	10	12	12	13	13
TU188	03-E16-00-4F	Storm Drain	VCP	8	7	7	8	8
TU188	03-E16-00-4G	Storm Drain	Concrete	10	7	7	8	8
TU188	03-E16-00-4H	Storm Drain	VCP	8	12	12	13	13
TU188	03-E16-00-4M	Storm Drain	VCP	6	13	13	13	13
TU188	03-E16-00-4N	Storm Drain	Concrete	10	7	12	8	13
TU188	03-E16-00-4O	Storm Drain	VCP	12	4	4	5	5
TU188	03-E16-00-4P	Storm Drain	VCP	12	4	6	5	7
TU188	03-E16-00-5A	Storm Drain	Concrete	10	6	6	7	7
TU188	03-E16-04-4G	Storm Drain	Concrete	10	7	7	8	8
TU189	03-E16-00-1H	Sanitary Sewer	Concrete	24	8	8	10	10
TU189	03-E16-00-3E	Sanitary Sewer	VCP	8	9	9	10	10

TABLE 3-2

PARCEL UC3 SURVEY UNITS AND ASSOCIATED TRENCH SEGMENT DATA

Trench Survey Unit	Trench Segment Identification Number	Segment Type	Pipe Material	Pipe Diameter (inches)	Minimum Pipe Depth (feet)	Maximum Pipe Depth (feet)	Minimum Trench Depth (feet)	Maximum Trench Depth (feet)
TU189	03-E16-00-3Q	Sanitary Sewer	VCP	8	8	8	9	9
TU189	03-E16-00-4A	Storm Drain	VCP	12	3	8	4	9
TU189	03-E16-00-4B	Sanitary Sewer	VCP	10	9	9	10	10
TU189	03-E16-00-4C	Storm Drain	Steel	4	5	5	5	5
TU190	03-E16-00-1H	Sanitary Sewer	Concrete	24	8	8	10	10
TU190	03-E16-00-3N	Storm Drain	CIP	4	3	4	3	4
TU190	03-E16-00-4B	Sanitary Sewer	VCP	10	9	9	10	10
TU190	03-E16-00-4D	Sanitary Sewer	VCP	10	9	9	10	10
TU190	03-E16-00-8B	Storm Drain	CIP	4	3	4	3	4

Abbreviations and Acronyms:

CIP – cast iron pipe
DIP – ductile iron pipe
TU – Trench Survey Unit
VCP – vitreous clay pipe

TABLE 3-3

PARCEL UC3 EXCAVATED SOIL SUMMARY

Trench Survey Unit Identification No.	Trench Segment	Truck Load No.	RSY[a] Screening Pad	Assigned ES Identification No.	Date Excavated
TU166	03-E16-00-1B	04	C24	ES-307	16-Aug-10
TU166	03-E16-00-1D	15	C25	ES-308	17-Aug-10
TU166	03-E16-00-1D	16	C26	ES-309	17-Aug-10
TU166	03-E16-00-2E	01	C12	ES-271	02-Apr-10
TU166	03-E16-00-3J	01	C12	ES-271	06-Apr-10
TU166	03-E16-56-2P	01	C32	ES-271	01-Apr-10
TU166	03-E16-56-2P	02	C32	ES-271	01-Apr-10
TU166	03-E16-56-2T	01	C32	ES-271	25-Mar-10
TU166	03-E16-56-2T	02	C32	ES-271	25-Mar-10
TU166	03-E16-56-2T	03	C32	ES-271	01-Apr-10
TU166	03-E16-56-2T	04	C32	ES-271	01-Apr-10
TU166	03-E16-56-3J	01	C32	ES-271	06-Apr-10
TU166	03-E16-56-3J	02	C32	ES-271	06-Apr-10
TU166	03-E16-56-3J	03	C32	ES-271	06-Apr-10
TU166	03-E16-56-3J	04	C32	ES-271	06-Apr-10
TU166	03-E16-56-3J	05	C32	ES-271	06-Apr-10
TU166	03-E16-56-3J	06	C32	ES-271	06-Apr-10
TU166	03-E16-56-3J	07	C32	ES-271	06-Apr-10
TU166	03-E16-56-3J	08	C32	ES-271	06-Apr-10
TU169	03-E16-00-1K	01	C30	ES-278	23-Apr-10
TU169	03-E16-00-1K	02	C30	ES-278	23-Apr-10
TU169	03-E16-00-1K	03	C30	ES-278	26-Apr-10
TU169	03-E16-00-1K	04	C30	ES-278	26-Apr-10
TU169	03-E16-00-1K	05	C30	ES-278	26-Apr-10
TU169	03-E16-00-1K	06	C30	ES-278	26-Apr-10
TU169	03-E16-00-1K	07	C30	ES-278	26-Apr-10
TU169	03-E16-00-1K	08	C30	ES-278	26-Apr-10
TU169	03-E16-00-1K	09	C30	ES-278	26-Apr-10
TU169	03-E16-00-1K	10	C30	ES-278	26-Apr-10
TU169	03-E16-00-1K	11	C30	ES-278	26-Apr-10
TU169	03-E16-00-1K	12	C30	ES-278	26-Apr-10
TU169	03-E16-00-3J	02	C12	ES-271	06-Apr-10
TU169	03-E16-00-3N	01	C30	ES-278	22-Apr-10
TU169	03-E16-00-3N	02	C30	ES-278	22-Apr-10
TU169	03-E16-00-3N	03	C30	ES-278	22-Apr-10
TU169	03-E16-00-3N	04	C30	ES-278	22-Apr-10
TU169	03-E16-00-3N	05	C30	ES-278	22-Apr-10
TU169	03-E16-00-3N	06	C30	ES-278	22-Apr-10

TABLE 3-3

PARCEL UC3 EXCAVATED SOIL SUMMARY

Trench Survey Unit Identification No.	Trench Segment	Truck Load No.	RSY[a] Screening Pad	Assigned ES Identification No.	Date Excavated
TU169	03-E16-00-3N	07	C30	ES-278	22-Apr-10
TU169	03-E16-00-3N	08	C30	ES-278	22-Apr-10
TU169	03-E16-00-3N	09	C30	ES-278	23-Apr-10
TU169	03-E16-00-3N	10	C30	ES-278	23-Apr-10
TU169	03-E16-00-3N	11	C30	ES-278	23-Apr-10
TU169	03-E16-00-3N	12	C30	ES-278	23-Apr-10
TU169	03-E16-00-3N	13	C30	ES-278	23-Apr-10
TU169	03-E16-00-3N	14	C30	ES-278	23-Apr-10
TU169	03-E16-00-3N	15	C30	ES-278	23-Apr-10
TU169	03-E16-00-3N	16	C29	ES-279	13-May-10
TU169	03-E16-00-3N	17	C29	ES-279	13-May-10
TU169	03-E16-00-3N	18	C11	ES-285	23-Jun-10
TU169	03-E16-00-3N	19	C11	ES-285	23-Jun-10
TU169	03-E16-00-3N	20	C11	ES-285	24-Jun-10
TU169	03-E16-00-3N	21	C11	ES-285	24-Jun-10
TU169	03-E16-00-3N	22	C11	ES-285	24-Jun-10
TU169	03-E16-00-3N	23	C11	ES-285	24-Jun-10
TU169	03-E16-00-3N	24	C11	ES-285	24-Jun-10
TU169	03-E16-00-3N	25	C11	ES-285	24-Jun-10
TU169	03-E16-00-3N	26	C11	ES-285	24-Jun-10
TU169	03-E16-00-3N	27	C11	ES-285	24-Jun-10
TU169	03-E16-00-3N	28	C11	ES-285	24-Jun-10
TU169	03-E16-00-3N	29	C11	ES-285	24-Jun-10
TU169	03-E16-00-3N	30	C11	ES-285	24-Jun-10
TU169	03-E16-00-3N	31	C11	ES-285	24-Jun-10
TU169	03-E16-00-3N	32	C11	ES-285	25-Jun-10
TU169	03-E16-00-3N	33	C11	ES-285	25-Jun-10
TU169	03-E16-00-3N	34	C11	ES-285	25-Jun-10
TU169	03-E16-00-3N	35	C11	ES-285	25-Jun-10
TU169	03-E16-00-3N	36	C21	ES-286	25-Jun-10
TU169	03-E16-00-3N	37	C21	ES-286	25-Jun-10
TU169	03-E16-00-3N	38	C21	ES-286	25-Jun-10
TU169	03-E16-00-3N	39	C21	ES-286	25-Jun-10
TU169	03-E16-00-3N	40	C21	ES-286	25-Jun-10
TU169	03-E16-00-3N	41	C21	ES-286	28-Jun-10
TU169	03-E16-00-3N	42	C21	ES-286	28-Jun-10
TU169	03-E16-00-3N	43	C21	ES-286	28-Jun-10
TU169	03-E16-00-3N	44	C21	ES-286	28-Jun-10

TABLE 3-3

PARCEL UC3 EXCAVATED SOIL SUMMARY

Trench Survey Unit Identification No.	Trench Segment	Truck Load No.	RSY[a] Screening Pad	Assigned ES Identification No.	Date Excavated
TU169	03-E16-00-3N	45	C21	ES-286	28-Jun-10
TU169	03-E16-00-3N	46	C21	ES-286	28-Jun-10
TU169	03-E16-00-3N	47	C21	ES-286	28-Jun-10
TU169	03-E16-00-3N	48	C21	ES-286	28-Jun-10
TU170	03-E16-00-1K	13	C10	ES-281	14-Jun-10
TU170	03-E16-00-1K	14	C10	ES-281	14-Jun-10
TU170	03-E16-00-1K	15	C09	ES-284	22-Jun-10
TU170	03-E16-00-1K	16	C09	ES-284	22-Jun-10
TU170	03-E16-00-1K	17	C09	ES-284	22-Jun-10
TU170	03-E16-00-1K	18	C09	ES-284	22-Jun-10
TU170	03-E16-00-1K	19	C09	ES-284	22-Jun-10
TU170	03-E16-00-1K	20	C09	ES-284	22-Jun-10
TU170	03-E16-00-1K	21	C09	ES-284	23-Jun-10
TU170	03-E16-00-1K	22	C09	ES-284	23-Jun-10
TU170	03-E16-00-1K	23	C11	ES-285	23-Jun-10
TU170	03-E16-00-1K	24	C11	ES-285	23-Jun-10
TU170	03-E16-00-1K	25	C11	ES-285	23-Jun-10
TU170	03-E16-00-1K	26	C11	ES-285	23-Jun-10
TU170	03-E16-00-1K	27	C11	ES-285	23-Jun-10
TU170	03-E16-00-1K	28	C11	ES-285	23-Jun-10
TU170	03-E16-00-1K	29	C11	ES-285	23-Jun-10
TU170	03-E16-00-1U	01	C12	ES-271	01-Apr-10
TU170	03-E16-00-1W	01	C29	ES-279	28-Apr-10
TU170	03-E16-00-1W	02	C29	ES-279	28-Apr-10
TU170	03-E16-00-1W	03	C29	ES-279	28-Apr-10
TU170	03-E16-00-1W	04	C29	ES-279	28-Apr-10
TU170	03-E16-00-1W	05	C29	ES-279	28-Apr-10
TU170	03-E16-00-1W	06	C29	ES-279	28-Apr-10
TU170	03-E16-00-1W	07	C29	ES-279	28-Apr-10
TU170	03-E16-00-1W	08	C29	ES-279	14-May-10
TU170	03-E16-00-1W	09	C29	ES-279	14-May-10
TU170	03-E16-00-1W	10	C29	ES-279	14-May-10
TU170	03-E16-00-1W	11	C10	ES-281	14-Jun-10
TU170	03-E16-00-1W	12	C10	ES-281	14-Jun-10
TU170	03-E16-00-1W	13	C10	ES-281	14-Jun-10
TU170	03-E16-00-1W	14	C10	ES-281	14-Jun-10
TU170	03-E16-00-1W	15	C10	ES-281	14-Jun-10
TU170	03-E16-00-1W	16	C10	ES-281	14-Jun-10

TABLE 3-3

PARCEL UC3 EXCAVATED SOIL SUMMARY

Trench Survey Unit Identification No.	Trench Segment	Truck Load No.	RSY[a] Screening Pad	Assigned ES Identification No.	Date Excavated
TU170	03-E16-00-1W	17	C10	ES-281	14-Jun-10
TU170	03-E16-00-1W	18	C10	ES-281	14-Jun-10
TU170	03-E16-00-1W	19	C10	ES-281	14-Jun-10
TU170	03-E16-00-1W	20	C10	ES-281	15-Jun-10
TU170	03-E16-00-1W	21	C09	ES-284	21-Jun-10
TU170	03-E16-00-1W	22	C09	ES-284	21-Jun-10
TU170	03-E16-00-1W	23	C09	ES-284	22-Jun-10
TU170	03-E16-00-1W	24	C09	ES-284	22-Jun-10
TU170	03-E16-00-1W	25	C09	ES-284	22-Jun-10
TU170	03-E16-00-1W	26	C09	ES-284	22-Jun-10
TU170	03-E16-00-1X	01	C29	ES-279	28-Apr-10
TU170	03-E16-00-1X	02	C29	ES-279	29-Apr-10
TU170	03-E16-00-1X	03	C29	ES-279	29-Apr-10
TU170	03-E16-00-1X	04	C29	ES-279	29-Apr-10
TU170	03-E16-00-1X	05	C29	ES-279	29-Apr-10
TU170	03-E16-00-1X	06	C29	ES-279	29-Apr-10
TU170	03-E16-00-1X	07	C10	ES-281	21-Jun-10
TU170	03-E16-00-1X	08	C10	ES-281	21-Jun-10
TU170	03-E16-00-1X	09	C10	ES-281	21-Jun-10
TU170	03-E16-00-1X	10	C09	ES-284	21-Jun-10
TU170	03-E16-00-1X	11	C09	ES-284	21-Jun-10
TU170	03-E16-00-1X	12	C09	ES-284	21-Jun-10
TU170	03-E16-00-1X	13	C09	ES-284	21-Jun-10
TU170	03-E16-00-1X	14	C09	ES-284	21-Jun-10
TU170	03-E16-00-1X	15	C09	ES-284	21-Jun-10
TU170	03-E16-00-1X	16	C09	ES-284	21-Jun-10
TU170	03-E16-00-1X	17	C09	ES-284	21-Jun-10
TU170	03-E16-00-1X	18	C09	ES-284	21-Jun-10
TU170	03-E16-00-1X	19	C09	ES-284	21-Jun-10
TU170	03-E16-00-1Y	06	C10	ES-281	17-May-10
TU170	03-E16-00-1Y	07	C10	ES-281	17-May-10
TU170	03-E16-00-2P	01	C12	ES-271	01-Apr-10
TU170	03-E16-00-8G	03	C10	ES-281	15-Jun-10
TU170	03-E16-00-8G	04	C10	ES-281	15-Jun-10
TU172	03-E16-00-1Y	01	C29	ES-279	29-Apr-10
TU172	03-E16-00-1Y	02	C29	ES-279	29-Apr-10
TU172	03-E16-00-1Y	03	C29	ES-279	30-Apr-10
TU172	03-E16-00-1Y	04	C29	ES-279	30-Apr-10

TABLE 3-3

PARCEL UC3 EXCAVATED SOIL SUMMARY

Trench Survey Unit Identification No.	Trench Segment	Truck Load No.	RSY[a] Screening Pad	Assigned ES Identification No.	Date Excavated
TU172	03-E16-00-1Y	05	C29	ES-279	17-May-10
TU172	03-E16-00-1Y	08	C10	ES-281	15-Jun-10
TU172	03-E16-00-1Y	09	C10	ES-281	15-Jun-10
TU172	03-E16-00-1Y	10	C10	ES-281	16-Jun-10
TU172	03-E16-00-1Y	11	C10	ES-281	16-Jun-10
TU172	03-E16-00-1Y	12	C10	ES-281	16-Jun-10
TU172	03-E16-00-1Y	13	C10	ES-281	17-Jun-10
TU172	03-E16-00-1Y	14	C10	ES-281	17-Jun-10
TU172	03-E16-00-1Y	15	C10	ES-281	17-Jun-10
TU172	03-E16-00-1Y	16	C10	ES-281	17-Jun-10
TU172	03-E16-00-1Y	17	C09	ES-284	18-Jun-10
TU172	03-E16-00-1Y	18	C09	ES-284	18-Jun-10
TU172	03-E16-00-1Y	19	C09	ES-284	18-Jun-10
TU172	03-E16-00-1Y	20	C09	ES-284	18-Jun-10
TU172	03-E16-00-1Y	21	C09	ES-284	18-Jun-10
TU172	03-E16-00-1Y	22	C29	ES-284	18-Jun-10
TU172	03-E16-00-8G	01	C29	ES-279	30-Apr-10
TU172	03-E16-00-8G	02	C29	ES-279	04-May-10
TU173	03-E16-00-1J	01	D09	ES-288	02-Aug-10
TU173	03-E16-00-1J	02	D09	ES-288	02-Aug-10
TU173	03-E16-00-1J	03	D09	ES-288	02-Aug-10
TU173	03-E16-00-1J	04	D09	ES-288	02-Aug-10
TU173	03-E16-00-1J	05	D09	ES-288	02-Aug-10
TU173	03-E16-00-1J	06	D09	ES-288	02-Aug-10
TU173	03-E16-00-1J	07	D09	ES-288	02-Aug-10
TU173	03-E16-00-1J	08	D09	ES-288	02-Aug-10
TU173	03-E16-00-1J	09	D09	ES-288	02-Aug-10
TU173	03-E16-00-1J	10	D09	ES-288	02-Aug-10
TU173	03-E16-00-1J	11	D09	ES-288	02-Aug-10
TU173	03-E16-00-1J	12	D09	ES-288	02-Aug-10
TU173	03-E16-00-1J	13	D09	ES-288	02-Aug-10
TU173	03-E16-00-1J	14	D09	ES-288	02-Aug-10
TU173	03-E16-00-1J	15	D09	ES-288	02-Aug-10
TU173	03-E16-00-1J	16	D09	ES-288	02-Aug-10
TU173	03-E16-00-1J	17	D09	ES-288	02-Aug-10
TU173	03-E16-00-1J	18	D09	ES-288	02-Aug-10
TU173	03-E16-00-1J	19	C18	ES-299	10-Aug-10
TU173	03-E16-00-1J	20	C17	ES-300	10-Aug-10

TABLE 3-3

PARCEL UC3 EXCAVATED SOIL SUMMARY

Trench Survey Unit Identification No.	Trench Segment	Truck Load No.	RSY[a] Screening Pad	Assigned ES Identification No.	Date Excavated
TU173	03-E16-00-2A	01	C21	ES-286	22-Jul-10
TU173	03-E16-00-2A	02	C21	ES-286	22-Jul-10
TU173	03-E16-00-2A	03	C21	ES-286	22-Jul-10
TU173	03-E16-00-2A	04	D10	ES-287	22-Jul-10
TU173	03-E16-00-2A	05	D10	ES-287	22-Jul-10
TU173	03-E16-00-2A	06	D10	ES-287	22-Jul-10
TU173	03-E16-00-2A	07	D10	ES-287	22-Jul-10
TU173	03-E16-00-2A	08	D10	ES-287	22-Jul-10
TU173	03-E16-00-2A	09	D10	ES-287	22-Jul-10
TU173	03-E16-00-2A	10	D10	ES-287	22-Jul-10
TU173	03-E16-00-2A	11	D10	ES-287	22-Jul-10
TU173	03-E16-00-2A	12	D10	ES-287	22-Jul-10
TU173	03-E16-00-2A	13	D10	ES-287	22-Jul-10
TU173	03-E16-00-2A	14	D10	ES-287	22-Jul-10
TU173	03-E16-00-2A	15	D10	ES-287	22-Jul-10
TU173	03-E16-00-2A	16	D10	ES-287	22-Jul-10
TU173	03-E16-00-2A	17	D10	ES-287	22-Jul-10
TU173	03-E16-00-2A	18	D10	ES-287	22-Jul-10
TU173	03-E16-00-2A	19	D10	ES-287	22-Jul-10
TU173	03-E16-00-2A	20	D10	ES-287	22-Jul-10
TU173	03-E16-00-2A	21	D10	ES-287	22-Jul-10
TU173	03-E16-00-2A	22	D10	ES-287	22-Jul-10
TU173	03-E16-00-2A	23	D10	ES-287	22-Jul-10
TU173	03-E16-00-2A	24	D10	ES-287	22-Jul-10
TU173	03-E16-00-2A	25	D10	ES-287	22-Jul-10
TU173	03-E16-00-2A	26	D10	ES-287	22-Jul-10
TU173	03-E16-00-2A	27	D10	ES-287	22-Jul-10
TU173	03-E16-00-2A	28	C17	ES-300	10-Aug-10
TU173	03-E16-00-2A	29	C35	ES-318	26-Aug-10
TU173	03-E16-00-2A	30	C36	ES-319	26-Aug-10
TU173	03-E16-00-2A	31	C36	ES-319	26-Aug-10
TU173	03-E16-00-2A	32	C36	ES-319	26-Aug-10
TU174	03-E16-00-3L	01	D09	ES-288	04-Aug-10
TU174	03-E16-00-3L	02	D09	ES-288	04-Aug-10
TU174	03-E16-00-3L	03	D08	ES-293	04-Aug-10
TU174	03-E16-00-3L	04	D08	ES-293	04-Aug-10
TU174	03-E16-00-3L	05	D08	ES-293	04-Aug-10
TU174	03-E16-74-3C	01	D01	ES-294	03-Aug-10

TABLE 3-3

PARCEL UC3 EXCAVATED SOIL SUMMARY

Trench Survey Unit Identification No.	Trench Segment	Truck Load No.	RSY[a] Screening Pad	Assigned ES Identification No.	Date Excavated
TU174	03-E16-74-3C	02	D01	ES-294	03-Aug-10
TU174	03-E16-74-3C	03	D01	ES-294	03-Aug-10
TU174	03-E16-74-3C	04	D01	ES-294	03-Aug-10
TU174	03-E16-74-3C	05	D01	ES-294	03-Aug-10
TU174	03-E16-74-3C	06	D01	ES-294	03-Aug-10
TU174	03-E16-74-3C	07	D01	ES-294	03-Aug-10
TU174	03-E16-74-3C	08	D01	ES-294	03-Aug-10
TU174	03-E16-74-3C	09	D01	ES-294	03-Aug-10
TU174	03-E16-74-3C	10	D01	ES-294	03-Aug-10
TU174	03-E16-74-3C	11	D01	ES-294	03-Aug-10
TU174	03-E16-74-3C	12	D01	ES-294	03-Aug-10
TU174	03-E16-74-3C	13	D01	ES-294	03-Aug-10
TU174	03-E16-74-3C	14	D01	ES-294	03-Aug-10
TU174	03-E16-74-3C	15	D01	ES-294	03-Aug-10
TU174	03-E16-74-3C	16	D01	ES-294	03-Aug-10
TU174	03-E16-74-3C	17	D01	ES-294	03-Aug-10
TU174	03-E16-74-3C	18	D01	ES-294	03-Aug-10
TU174	03-E16-74-3C	19	D01	ES-294	03-Aug-10
TU174	03-E16-74-3C	20	D01	ES-294	03-Aug-10
TU174	03-E16-74-3C	21	D01	ES-294	03-Aug-10
TU174	03-E16-74-3G	01	D01	ES-294	04-Aug-10
TU174	03-E16-74-3J	01	D01	ES-294	04-Aug-10
TU174	03-E16-74-3J	02	D01	ES-294	04-Aug-10
TU174	03-E16-74-3J	03	D01	ES-294	04-Aug-10
TU174	03-E16-74-3J	04	D01	ES-294	04-Aug-10
TU174	03-E16-74-3J	05	D06	ES-295	04-Aug-10
TU174	03-E16-74-3J	06	D06	ES-295	04-Aug-10
TU174	03-E16-74-3J	07	D06	ES-295	04-Aug-10
TU174	03-E16-74-3J	08	D06	ES-295	04-Aug-10
TU174	03-E16-74-3J	09	D06	ES-295	04-Aug-10
TU174	03-E16-74-3J	10	D06	ES-295	04-Aug-10
TU175	03-E16-00-2B	02	D08	ES-293	05-Aug-10
TU175	03-E16-00-2B	03	D08	ES-293	05-Aug-10
TU175	03-E16-00-2B	04	D08	ES-293	05-Aug-10
TU175	03-E16-00-2B	05	D08	ES-293	05-Aug-10
TU175	03-E16-00-2B	06	D08	ES-293	05-Aug-10
TU175	03-E16-00-2B	07	D08	ES-293	05-Aug-10
TU175	03-E16-00-2B	08	D08	ES-293	05-Aug-10

TABLE 3-3

PARCEL UC3 EXCAVATED SOIL SUMMARY

Trench Survey Unit Identification No.	Trench Segment	Truck Load No.	RSY[a] Screening Pad	Assigned ES Identification No.	Date Excavated
TU175	03-E16-00-2B	09	D08	ES-293	05-Aug-10
TU175	03-E16-00-2B	10	D08	ES-293	05-Aug-10
TU175	03-E16-00-2B	11	D08	ES-293	05-Aug-10
TU175	03-E16-00-2B	12	D08	ES-293	05-Aug-10
TU175	03-E16-00-2B	13	D08	ES-293	05-Aug-10
TU175	03-E16-00-2B	14	D08	ES-293	05-Aug-10
TU175	03-E16-00-2B	15	D08	ES-293	05-Aug-10
TU175	03-E16-00-2B	16	D08	ES-293	05-Aug-10
TU175	03-E16-00-2B	17	D08	ES-293	05-Aug-10
TU175	03-E16-00-2B	18	D08	ES-293	06-Aug-10
TU175	03-E16-00-2B	19	D08	ES-293	06-Aug-10
TU175	03-E16-00-2B	20	D08	ES-293	06-Aug-10
TU175	03-E16-00-2B	21	D08	ES-293	06-Aug-10
TU175	03-E16-00-2B	22	D07	ES-296	06-Aug-10
TU175	03-E16-00-2B	23	D07	ES-296	06-Aug-10
TU175	03-E16-00-2B	24	D07	ES-296	06-Aug-10
TU175	03-E16-00-2B	25	D07	ES-296	06-Aug-10
TU175	03-E16-00-2B	26	D07	ES-296	06-Aug-10
TU175	03-E16-00-2B	27	D07	ES-296	06-Aug-10
TU175	03-E16-00-2B	28	D07	ES-296	06-Aug-10
TU175	03-E16-00-2B	29	D07	ES-296	06-Aug-10
TU175	03-E16-00-2B	30	D07	ES-296	06-Aug-10
TU175	03-E16-00-2B	31	D07	ES-296	06-Aug-10
TU175	03-E16-00-2B	32	D07	ES-296	06-Aug-10
TU175	03-E16-00-2B	33	D07	ES-296	06-Aug-10
TU175	03-E16-00-2B	34	D07	ES-296	06-Aug-10
TU175	03-E16-00-2B	35	D07	ES-296	06-Aug-10
TU175	03-E16-00-2B	36	D07	ES-296	06-Aug-10
TU175	03-E16-00-2B	37	D07	ES-296	06-Aug-10
TU175	03-E16-00-2B	38	D07	ES-296	06-Aug-10
TU175	03-E16-00-2B	39	D07	ES-296	06-Aug-10
TU175	03-E16-00-2B	40	D07	ES-296	06-Aug-10
TU175	03-E16-00-2B	41	D07	ES-296	06-Aug-10
TU175	03-E16-00-2B	42	D07	ES-296	06-Aug-10
TU175	03-E16-00-2B	43	D07	ES-296	06-Aug-10
TU175	03-E16-00-2B	44	D07	ES-296	06-Aug-10
TU175	03-E16-00-2B	45	D07	ES-296	06-Aug-10
TU175	03-E16-00-2B	46	D07	ES-296	06-Aug-10

TABLE 3-3

PARCEL UC3 EXCAVATED SOIL SUMMARY

Trench Survey Unit Identification No.	Trench Segment	Truck Load No.	RSY[a] Screening Pad	Assigned ES Identification No.	Date Excavated
TU175	03-E16-00-2B	47	C20	ES-297	06-Aug-10
TU175	03-E16-00-2B	48	C20	ES-297	06-Aug-10
TU175	03-E16-00-2B	49	C20	ES-297	06-Aug-10
TU175	03-E16-00-2B	50	C20	ES-297	06-Aug-10
TU175	03-E16-00-2B	51	C20	ES-297	06-Aug-10
TU175	03-E16-00-2B	52	C20	ES-297	06-Aug-10
TU175	03-E16-00-2B	53	C20	ES-297	06-Aug-10
TU175	03-E16-00-2B	54	C20	ES-297	06-Aug-10
TU175	03-E16-00-2B	55	C20	ES-297	06-Aug-10
TU175	03-E16-00-2B	56	C20	ES-297	06-Aug-10
TU175	03-E16-00-2B	57	C20	ES-297	06-Aug-10
TU175	03-E16-00-2B	58	C20	ES-297	06-Aug-10
TU175	03-E16-00-2B	59	C20	ES-297	06-Aug-10
TU175	03-E16-00-2B	60	C20	ES-297	06-Aug-10
TU175	03-E16-00-2B	61	C20	ES-297	06-Aug-10
TU175	03-E16-00-2B	62	C20	ES-297	06-Aug-10
TU175	03-E16-00-2B	63	C20	ES-297	06-Aug-10
TU175	03-E16-00-2B	64	C20	ES-297	06-Aug-10
TU175	03-E16-00-2B	65	C20	ES-297	09-Aug-10
TU175	03-E16-00-2B	66	C20	ES-297	09-Aug-10
TU175	03-E16-00-2B	67	C20	ES-297	09-Aug-10
TU175	03-E16-00-2B	68	C20	ES-297	09-Aug-10
TU175	03-E16-00-2B	69	C20	ES-297	09-Aug-10
TU175	03-E16-00-2B	70	C20	ES-297	09-Aug-10
TU175	03-E16-00-2B	71	C20	ES-297	09-Aug-10
TU175	03-E16-00-2B	72	C19	ES-298	09-Aug-10
TU175	03-E16-00-2B	73	C19	ES-298	09-Aug-10
TU175	03-E16-00-2B	74	C19	ES-298	09-Aug-10
TU175	03-E16-00-2B	75	C19	ES-298	09-Aug-10
TU175	03-E16-00-2B	76	C19	ES-298	09-Aug-10
TU175	03-E16-00-2B	77	C19	ES-298	09-Aug-10
TU175	03-E16-00-2B	78	C19	ES-298	09-Aug-10
TU175	03-E16-00-2B	79	C19	ES-298	09-Aug-10
TU175	03-E16-00-2B	80	C19	ES-298	09-Aug-10
TU175	03-E16-00-2B	81	C19	ES-298	09-Aug-10
TU175	03-E16-00-2F	01	C29	ES-279	17-May-10
TU175	03-E16-00-2G	01	C19	ES-298	09-Aug-10
TU175	03-E16-00-2G	02	C19	ES-298	09-Aug-10

TABLE 3-3

PARCEL UC3 EXCAVATED SOIL SUMMARY

Trench Survey Unit Identification No.	Trench Segment	Truck Load No.	RSY[a] Screening Pad	Assigned ES Identification No.	Date Excavated
TU175	03-E16-00-2G	03	C19	ES-298	09-Aug-10
TU175	03-E16-00-2G	04	C19	ES-298	09-Aug-10
TU175	03-E16-00-2G	05	C19	ES-298	09-Aug-10
TU175	03-E16-00-2G	06	C19	ES-298	09-Aug-10
TU175	03-E16-00-2G	07	C19	ES-298	09-Aug-10
TU175	03-E16-00-2G	08	C19	ES-298	09-Aug-10
TU175	03-E16-00-2G	09	C19	ES-298	09-Aug-10
TU175	03-E16-00-2G	10	C19	ES-298	09-Aug-10
TU175	03-E16-00-2G	11	C19	ES-298	09-Aug-10
TU175	03-E16-00-2G	12	C19	ES-298	09-Aug-10
TU176	03-E16-00-2G	13	C19	ES-298	09-Aug-10
TU176	03-E16-00-2G	14	C19	ES-298	09-Aug-10
TU176	03-E16-00-2G	15	C19	ES-298	09-Aug-10
TU176	03-E16-00-2G	16	C18	ES-299	09-Aug-10
TU176	03-E16-00-2G	17	C18	ES-299	09-Aug-10
TU176	03-E16-00-2G	18	C18	ES-299	09-Aug-10
TU176	03-E16-00-2G	19	C18	ES-299	09-Aug-10
TU176	03-E16-00-2G	20	C18	ES-299	09-Aug-10
TU176	03-E16-00-2G	21	C18	ES-299	09-Aug-10
TU176	03-E16-00-2G	22	C18	ES-299	09-Aug-10
TU176	03-E16-00-2G	23	C18	ES-299	09-Aug-10
TU176	03-E16-00-2G	24	C18	ES-299	09-Aug-10
TU176	03-E16-00-2G	25	C18	ES-299	09-Aug-10
TU176	03-E16-00-2G	26	C18	ES-299	09-Aug-10
TU176	03-E16-00-2G	27	C18	ES-299	10-Aug-10
TU176	03-E16-00-2G	28	C18	ES-299	10-Aug-10
TU176	03-E16-00-2G	29	C18	ES-299	10-Aug-10
TU176	03-E16-00-2G	30	C18	ES-299	10-Aug-10
TU176	03-E16-00-2G	31	C18	ES-299	10-Aug-10
TU176	03-E16-00-2G	32	C18	ES-299	10-Aug-10
TU176	03-E16-00-2G	33	C18	ES-299	10-Aug-10
TU176	03-E16-00-2G	34	C18	ES-299	10-Aug-10
TU176	03-E16-00-2G	35	C18	ES-299	10-Aug-10
TU176	03-E16-00-2G	36	C18	ES-299	10-Aug-10
TU176	03-E16-00-2G	37	C18	ES-299	10-Aug-10
TU176	03-E16-00-2G	38	C18	ES-299	10-Aug-10
TU176	03-E16-00-2G	39	C18	ES-299	10-Aug-10
TU176	03-E16-00-2G	40	C17	ES-300	10-Aug-10

TABLE 3-3

PARCEL UC3 EXCAVATED SOIL SUMMARY

Trench Survey Unit Identification No.	Trench Segment	Truck Load No.	RSY[a] Screening Pad	Assigned ES Identification No.	Date Excavated
TU176	03-E16-00-2G	41	C17	ES-300	10-Aug-10
TU176	03-E16-00-2G	42	C17	ES-300	10-Aug-10
TU176	03-E16-00-2G	43	C17	ES-300	10-Aug-10
TU176	03-E16-00-2G	44	C17	ES-300	10-Aug-10
TU176	03-E16-00-2G	45	C17	ES-300	10-Aug-10
TU176	03-E16-00-2G	46	C17	ES-300	10-Aug-10
TU176	03-E16-00-2G	47	C17	ES-300	10-Aug-10
TU176	03-E16-00-2G	48	C17	ES-300	10-Aug-10
TU176	03-E16-00-2G	49	C17	ES-300	10-Aug-10
TU176	03-E16-00-2G	50	C17	ES-300	10-Aug-10
TU176	03-E16-00-2G	51	C17	ES-300	10-Aug-10
TU176	03-E16-00-2G	52	C17	ES-300	10-Aug-10
TU176	03-E16-00-2G	53	C17	ES-300	10-Aug-10
TU176	03-E16-00-2G	54	C17	ES-300	10-Aug-10
TU176	03-E16-00-2G	55	C17	ES-300	10-Aug-10
TU176	03-E16-00-2G	56	C17	ES-300	10-Aug-10
TU176	03-E16-00-2G	57	C17	ES-300	10-Aug-10
TU176	03-E16-00-2G	58	C17	ES-300	10-Aug-10
TU176	03-E16-00-2G	59	C17	ES-300	10-Aug-10
TU176	03-E16-00-2G	60	C17	ES-300	10-Aug-10
TU176	03-E16-00-2G	61	C17	ES-300	10-Aug-10
TU176	03-E16-00-2G	62	C17	ES-300	10-Aug-10
TU176	03-E16-00-2G	63	C16	ES-301	10-Aug-10
TU176	03-E16-00-2G	64	C16	ES-301	10-Aug-10
TU176	03-E16-00-2G	65	C16	ES-301	10-Aug-10
TU176	03-E16-00-3A	01	C16	ES-301	10-Aug-10
TU176	03-E16-00-3A	02	C16	ES-301	10-Aug-10
TU176	03-E16-00-3A	03	C16	ES-301	10-Aug-10
TU176	03-E16-00-3A	04	C16	ES-301	10-Aug-10
TU176	03-E16-00-3A	05	C16	ES-301	10-Aug-10
TU176	03-E16-00-3A	06	C16	ES-301	10-Aug-10
TU176	03-E16-00-3A	07	C16	ES-301	10-Aug-10
TU176	03-E16-00-3A	08	C16	ES-301	10-Aug-10
TU176	03-E16-00-3A	09	C16	ES-301	10-Aug-10
TU176	03-E16-00-3A	10	C16	ES-301	10-Aug-10
TU176	03-E16-00-3A	11	C16	ES-301	10-Aug-10
TU176	03-E16-00-3A	12	C16	ES-301	10-Aug-10
TU176	03-E16-00-3A	13	C16	ES-301	10-Aug-10

TABLE 3-3

PARCEL UC3 EXCAVATED SOIL SUMMARY

Trench Survey Unit Identification No.	Trench Segment	Truck Load No.	RSY[a] Screening Pad	Assigned ES Identification No.	Date Excavated
TU176	03-E16-00-3A	14	C16	ES-301	10-Aug-10
TU176	03-E16-00-3A	15	C16	ES-301	10-Aug-10
TU176	03-E16-00-3A	16	C16	ES-301	10-Aug-10
TU176	03-E16-00-3A	17	C16	ES-301	10-Aug-10
TU176	03-E16-00-3A	18	C16	ES-301	10-Aug-10
TU176	03-E16-00-3A	19	C16	ES-301	10-Aug-10
TU176	03-E16-00-3A	20	C16	ES-301	10-Aug-10
TU176	03-E16-00-3A	21	C16	ES-301	10-Aug-10
TU176	03-E16-00-3A	22	C16	ES-301	11-Aug-10
TU176	03-E16-00-3A	23	C15	ES-302	11-Aug-10
TU177	03-E16-00-1A	01	C15	ES-302	12-Aug-10
TU177	03-E16-00-1A	02	C15	ES-302	12-Aug-10
TU177	03-E16-00-1A	03	C15	ES-302	12-Aug-10
TU177	03-E16-00-1A	04	C15	ES-302	12-Aug-10
TU177	03-E16-00-1A	05	C14	ES-303	12-Aug-10
TU177	03-E16-00-1A	06	C14	ES-303	12-Aug-10
TU177	03-E16-00-1A	07	C14	ES-303	12-Aug-10
TU177	03-E16-00-1A	08	C14	ES-303	12-Aug-10
TU177	03-E16-00-1A	09	C14	ES-303	12-Aug-10
TU177	03-E16-00-1A	10	C14	ES-303	12-Aug-10
TU177	03-E16-00-1A	11	C14	ES-303	12-Aug-10
TU177	03-E16-00-1A	12	C14	ES-303	12-Aug-10
TU177	03-E16-00-1A	13	C14	ES-303	12-Aug-10
TU177	03-E16-00-1A	14	C14	ES-303	12-Aug-10
TU177	03-E16-00-1A	15	C14	ES-303	12-Aug-10
TU177	03-E16-00-1A	16	C14	ES-303	12-Aug-10
TU177	03-E16-00-1A	17	C14	ES-303	12-Aug-10
TU177	03-E16-00-1A	18	C14	ES-303	12-Aug-10
TU177	03-E16-00-1A	19	C14	ES-303	12-Aug-10
TU177	03-E16-00-1A	20	C14	ES-303	12-Aug-10
TU177	03-E16-00-1A	21	C14	ES-303	12-Aug-10
TU177	03-E16-00-1A	22	C14	ES-303	12-Aug-10
TU177	03-E16-00-1A	23	C14	ES-303	12-Aug-10
TU177	03-E16-00-1A	24	C14	ES-303	12-Aug-10
TU177	03-E16-00-1A	25	C14	ES-303	12-Aug-10
TU177	03-E16-00-1A	26	C14	ES-303	12-Aug-10
TU177	03-E16-00-1A	27	C14	ES-303	12-Aug-10
TU177	03-E16-00-1A	28	C14	ES-303	12-Aug-10

TABLE 3-3

PARCEL UC3 EXCAVATED SOIL SUMMARY

Trench Survey Unit Identification No.	Trench Segment	Truck Load No.	RSY[a] Screening Pad	Assigned ES Identification No.	Date Excavated
TU177	03-E16-00-1A	29	C14	ES-303	12-Aug-10
TU177	03-E16-00-1A	30	C13	ES-304	12-Aug-10
TU177	03-E16-00-1A	31	C13	ES-304	12-Aug-10
TU177	03-E16-00-1A	32	C13	ES-304	12-Aug-10
TU177	03-E16-00-1A	33	C13	ES-304	12-Aug-10
TU177	03-E16-00-1A	34	C13	ES-304	12-Aug-10
TU177	03-E16-00-1A	35	C13	ES-304	12-Aug-10
TU177	03-E16-00-1A	36	C13	ES-304	12-Aug-10
TU177	03-E16-00-1A	37	C13	ES-304	12-Aug-10
TU177	03-E16-00-1A	38	C13	ES-304	12-Aug-10
TU177	03-E16-00-1A	39	C13	ES-304	12-Aug-10
TU177	03-E16-00-1A	40	C13	ES-304	12-Aug-10
TU177	03-E16-00-1A	41	C13	ES-304	12-Aug-10
TU177	03-E16-00-1A	42	C13	ES-304	12-Aug-10
TU177	03-E16-00-1A	43	C13	ES-304	12-Aug-10
TU177	03-E16-00-1A	44	C13	ES-304	12-Aug-10
TU177	03-E16-00-1A	45	C13	ES-304	12-Aug-10
TU177	03-E16-00-1A	46	C13	ES-304	12-Aug-10
TU177	03-E16-00-1A	47	C13	ES-304	12-Aug-10
TU177	03-E16-00-1A	48	C13	ES-304	12-Aug-10
TU177	03-E16-00-1A	49	C13	ES-304	12-Aug-10
TU177	03-E16-00-1A	50	C13	ES-304	12-Aug-10
TU177	03-E16-00-1A	51	C13	ES-304	13-Aug-10
TU177	03-E16-00-1A	52	C13	ES-304	13-Aug-10
TU177	03-E16-00-1A	53	C13	ES-304	13-Aug-10
TU177	03-E16-00-1A	54	C13	ES-304	13-Aug-10
TU177	03-E16-00-1A	55	C22	ES-305	13-Aug-10
TU177	03-E16-00-1A	56	C22	ES-305	13-Aug-10
TU177	03-E16-00-1A	57	C22	ES-305	13-Aug-10
TU177	03-E16-00-1A	58	C22	ES-305	13-Aug-10
TU177	03-E16-00-1A	59	C22	ES-305	13-Aug-10
TU177	03-E16-00-1A	60	C22	ES-305	13-Aug-10
TU177	03-E16-00-1A	61	C22	ES-305	13-Aug-10
TU177	03-E16-00-1A	62	C22	ES-305	13-Aug-10
TU177	03-E16-00-1A	63	C22	ES-305	13-Aug-10
TU177	03-E16-00-1A	64	C22	ES-305	13-Aug-10
TU177	03-E16-00-1A	65	C22	ES-305	13-Aug-10
TU177	03-E16-00-1A	66	C22	ES-305	13-Aug-10

TABLE 3-3

PARCEL UC3 EXCAVATED SOIL SUMMARY

Trench Survey Unit Identification No.	Trench Segment	Truck Load No.	RSY[a] Screening Pad	Assigned ES Identification No.	Date Excavated
TU177	03-E16-00-1A	67	C22	ES-305	13-Aug-10
TU177	03-E16-00-1A	68	C22	ES-305	13-Aug-10
TU177	03-E16-00-1A	69	C22	ES-305	13-Aug-10
TU177	03-E16-00-1A	70	C22	ES-305	13-Aug-10
TU177	03-E16-00-1A	71	C22	ES-305	13-Aug-10
TU177	03-E16-00-1A	72	C22	ES-305	13-Aug-10
TU177	03-E16-00-1A	73	C22	ES-305	13-Aug-10
TU177	03-E16-00-1A	74	C22	ES-305	13-Aug-10
TU177	03-E16-00-1A	75	C22	ES-305	13-Aug-10
TU177	03-E16-00-1A	76	C22	ES-305	13-Aug-10
TU177	03-E16-00-8M	01	C21	ES-286	20-Jul-10
TU177	03-E16-00-8M	02	C21	ES-286	20-Jul-10
TU177	03-E16-00-8M	03	C21	ES-286	20-Jul-10
TU177	03-E16-00-8M	04	C21	ES-286	20-Jul-10
TU177	03-E16-00-8M	05	C21	ES-286	20-Jul-10
TU177	03-E16-00-8M	06	C21	ES-286	20-Jul-10
TU177	03-E16-00-8M	07	C21	ES-286	20-Jul-10
TU177	03-E16-00-8M	08	C21	ES-286	20-Jul-10
TU177	03-E16-00-8M	09	C21	ES-286	20-Jul-10
TU177	03-E16-00-8M	10	C21	ES-286	20-Jul-10
TU177	03-E16-00-8M	11	C26	ES-309	17-Aug-10
TU177	03-E16-00-8M	12	C28	ES-311	19-Aug-10
TU178	03-E16-00-1A	77	C22	ES-305	13-Aug-10
TU178	03-E16-00-1A	78	C22	ES-305	13-Aug-10
TU178	03-E16-00-1A	79	C22	ES-305	13-Aug-10
TU178	03-E16-00-1A	80	C22	ES-305	13-Aug-10
TU178	03-E16-00-1A	81	C22	ES-305	13-Aug-10
TU178	03-E16-00-1A	82	C23	ES-306	13-Aug-10
TU178	03-E16-00-1A	83	C23	ES-306	13-Aug-10
TU178	03-E16-00-1A	84	C23	ES-306	13-Aug-10
TU178	03-E16-00-1A	85	C23	ES-306	13-Aug-10
TU178	03-E16-00-1A	86	C23	ES-306	13-Aug-10
TU178	03-E16-00-1A	87	C23	ES-306	13-Aug-10
TU178	03-E16-00-1A	88	C23	ES-306	13-Aug-10
TU178	03-E16-00-1A	89	C23	ES-306	13-Aug-10
TU178	03-E16-00-1A	90	C23	ES-306	13-Aug-10
TU178	03-E16-00-1A	91	C23	ES-306	13-Aug-10
TU178	03-E16-00-1B	01	C31	ES-276	16-Apr-10

TABLE 3-3

PARCEL UC3 EXCAVATED SOIL SUMMARY

Trench Survey Unit Identification No.	Trench Segment	Truck Load No.	RSY[a] Screening Pad	Assigned ES Identification No.	Date Excavated
TU178	03-E16-00-1B	02	D10	ES-287	23-Jul-10
TU178	03-E16-00-1B	03	D10	ES-287	23-Jul-10
TU178	03-E16-00-1C	01	C23	ES-306	13-Aug-10
TU178	03-E16-00-1C	02	C23	ES-306	13-Aug-10
TU178	03-E16-00-1C	03	C23	ES-306	13-Aug-10
TU178	03-E16-00-1C	04	C23	ES-306	13-Aug-10
TU178	03-E16-00-1C	05	C23	ES-306	13-Aug-10
TU178	03-E16-00-1C	06	C23	ES-306	13-Aug-10
TU178	03-E16-00-1C	07	C23	ES-306	13-Aug-10
TU178	03-E16-00-1C	08	C23	ES-306	13-Aug-10
TU178	03-E16-00-1C	09	C23	ES-306	13-Aug-10
TU178	03-E16-00-1C	10	C23	ES-306	13-Aug-10
TU178	03-E16-00-1C	11	C23	ES-306	16-Aug-10
TU178	03-E16-00-1C	12	C23	ES-306	16-Aug-10
TU178	03-E16-00-1C	13	C23	ES-306	16-Aug-10
TU178	03-E16-00-1C	14	C23	ES-306	16-Aug-10
TU178	03-E16-00-1C	15	C23	ES-306	16-Aug-10
TU178	03-E16-00-1C	16	C23	ES-306	16-Aug-10
TU178	03-E16-00-1C	17	C23	ES-306	16-Aug-10
TU178	03-E16-00-1C	18	C24	ES-307	16-Aug-10
TU178	03-E16-00-1C	19	C24	ES-307	16-Aug-10
TU178	03-E16-00-1C	20	C24	ES-307	16-Aug-10
TU178	03-E16-00-1C	21	C24	ES-307	16-Aug-10
TU178	03-E16-00-1C	22	C24	ES-307	16-Aug-10
TU178	03-E16-00-1C	23	C24	ES-307	16-Aug-10
TU178	03-E16-00-1C	24	C24	ES-307	16-Aug-10
TU178	03-E16-00-1C	25	C24	ES-307	16-Aug-10
TU178	03-E16-00-1C	26	C24	ES-307	16-Aug-10
TU178	03-E16-00-1C	27	C24	ES-307	16-Aug-10
TU178	03-E16-00-1C	28	C24	ES-307	16-Aug-10
TU178	03-E16-00-1C	29	C24	ES-307	16-Aug-10
TU178	03-E16-00-1C	30	C24	ES-307	16-Aug-10
TU178	03-E16-00-1C	31	C24	ES-307	16-Aug-10
TU178	03-E16-00-1C	32	C24	ES-307	16-Aug-10
TU178	03-E16-00-1C	33	C24	ES-307	16-Aug-10
TU178	03-E16-00-1C	34	C24	ES-307	16-Aug-10
TU178	03-E16-00-1C	35	C24	ES-307	16-Aug-10
TU178	03-E16-00-1C	36	C24	ES-307	16-Aug-10

TABLE 3-3

PARCEL UC3 EXCAVATED SOIL SUMMARY

Trench Survey Unit Identification No.	Trench Segment	Truck Load No.	RSY[a] Screening Pad	Assigned ES Identification No.	Date Excavated
TU178	03-E16-00-1C	37	C24	ES-307	16-Aug-10
TU178	03-E16-00-1C	38	C24	ES-307	16-Aug-10
TU178	03-E16-00-1C	39	C25	ES-308	16-Aug-10
TU178	03-E16-00-1C	40	C25	ES-308	16-Aug-10
TU178	03-E16-00-1C	41	C25	ES-308	16-Aug-10
TU178	03-E16-00-1C	42	C25	ES-308	16-Aug-10
TU178	03-E16-00-1C	43	C25	ES-308	16-Aug-10
TU178	03-E16-00-1C	44	C25	ES-308	17-Aug-10
TU178	03-E16-00-1C	45	C25	ES-308	17-Aug-10
TU178	03-E16-00-1C	46	C25	ES-308	17-Aug-10
TU178	03-E16-00-1C	47	C25	ES-308	17-Aug-10
TU178	03-E16-00-1C	48	C25	ES-308	17-Aug-10
TU178	03-E16-00-1C	49	C25	ES-308	17-Aug-10
TU178	03-E16-00-1C	50	C25	ES-308	17-Aug-10
TU178	03-E16-00-1D	01	C12	ES-271	02-Apr-10
TU178	03-E16-00-1D	02	C12	ES-271	05-Apr-10
TU178	03-E16-00-1D	03	C12	ES-271	05-Apr-10
TU178	03-E16-00-1D	04	D10	ES-287	23-Jul-10
TU178	03-E16-00-1D	05	D09	ES-288	23-Jul-10
TU178	03-E16-00-1D	06	D09	ES-288	23-Jul-10
TU178	03-E16-00-1D	07	D09	ES-288	23-Jul-10
TU178	03-E16-00-1D	08	D09	ES-288	23-Jul-10
TU178	03-E16-00-1D	09	D09	ES-288	23-Jul-10
TU178	03-E16-00-1D	10	C24	ES-307	16-Aug-10
TU178	03-E16-00-1D	11	C24	ES-307	16-Aug-10
TU178	03-E16-00-1D	12	C24	ES-307	16-Aug-10
TU178	03-E16-00-1D	13	C24	ES-307	16-Aug-10
TU178	03-E16-00-1D	14	C24	ES-307	16-Aug-10
TU178	03-E16-00-8M	13	C28	ES-311	19-Aug-10
TU178	03-E16-00-8M	14	C28	ES-311	19-Aug-10
TU178	03-E16-00-8M	15	C28	ES-311	19-Aug-10
TU178	03-E16-00-8M	16	C28	ES-311	19-Aug-10
TU178	03-E16-00-8M	17	C31	ES-314	20-Aug-10
TU178	03-E16-00-8M	18	C31	ES-314	20-Aug-10
TU178	03-E16-00-8M	19	C31	ES-314	20-Aug-10
TU178	03-E16-00-8M	20	C31	ES-314	20-Aug-10
TU178	03-E16-00-8M	21	C31	ES-314	20-Aug-10
TU178	03-E16-00-8M	22	C31	ES-314	20-Aug-10

TABLE 3-3

PARCEL UC3 EXCAVATED SOIL SUMMARY

Trench Survey Unit Identification No.	Trench Segment	Truck Load No.	RSY[a] Screening Pad	Assigned ES Identification No.	Date Excavated
TU179	03-E16-00-1C	51	C25	ES-308	17-Aug-10
TU179	03-E16-00-1C	52	C25	ES-308	17-Aug-10
TU179	03-E16-00-1C	53	C25	ES-308	17-Aug-10
TU179	03-E16-00-1C	54	C25	ES-308	17-Aug-10
TU179	03-E16-00-1C	55	C25	ES-308	17-Aug-10
TU179	03-E16-00-1C	56	C25	ES-308	17-Aug-10
TU179	03-E16-00-1C	57	C25	ES-308	17-Aug-10
TU179	03-E16-00-1C	58	C25	ES-308	17-Aug-10
TU179	03-E16-00-1C	59	C25	ES-308	17-Aug-10
TU179	03-E16-00-1C	60	C25	ES-308	17-Aug-10
TU179	03-E16-00-1C	61	C25	ES-308	17-Aug-10
TU179	03-E16-00-1C	62	C25	ES-308	17-Aug-10
TU179	03-E16-00-1C	63	C25	ES-308	17-Aug-10
TU179	03-E16-00-1C	64	C26	ES-309	17-Aug-10
TU179	03-E16-00-1C	65	C26	ES-309	17-Aug-10
TU179	03-E16-00-1C	66	C26	ES-309	17-Aug-10
TU179	03-E16-00-1C	67	C26	ES-309	17-Aug-10
TU179	03-E16-00-1C	68	C26	ES-309	17-Aug-10
TU179	03-E16-00-1C	69	C26	ES-309	17-Aug-10
TU179	03-E16-00-1C	70	C26	ES-309	17-Aug-10
TU179	03-E16-00-1C	71	C26	ES-309	17-Aug-10
TU179	03-E16-00-1C	72	C26	ES-309	17-Aug-10
TU179	03-E16-00-1C	73	C26	ES-309	17-Aug-10
TU179	03-E16-00-1C	74	C26	ES-309	17-Aug-10
TU179	03-E16-00-1C	75	C26	ES-309	17-Aug-10
TU179	03-E16-00-1C	76	C26	ES-309	17-Aug-10
TU179	03-E16-00-1C	77	C26	ES-309	17-Aug-10
TU179	03-E16-00-1C	78	C26	ES-309	17-Aug-10
TU179	03-E16-00-1C	79	C26	ES-309	17-Aug-10
TU179	03-E16-00-1C	80	C26	ES-309	17-Aug-10
TU179	03-E16-00-1C	81	C26	ES-309	17-Aug-10
TU179	03-E16-00-1C	82	C26	ES-309	17-Aug-10
TU179	03-E16-00-1C	83	C26	ES-309	17-Aug-10
TU179	03-E16-00-1C	84	C26	ES-309	17-Aug-10
TU179	03-E16-00-1C	85	C26	ES-309	17-Aug-10
TU179	03-E16-00-1C	86	C26	ES-309	17-Aug-10
TU179	03-E16-00-1C	87	C27	ES-310	17-Aug-10
TU179	03-E16-00-1E	01	C12	ES-271	02-Apr-10

TABLE 3-3

PARCEL UC3 EXCAVATED SOIL SUMMARY

Trench Survey Unit Identification No.	Trench Segment	Truck Load No.	RSY[a] Screening Pad	Assigned ES Identification No.	Date Excavated
TU179	03-E16-00-1F	01	C27	ES-310	18-Aug-10
TU179	03-E16-00-1F	02	C27	ES-310	18-Aug-10
TU179	03-E16-00-1F	03	C27	ES-310	18-Aug-10
TU179	03-E16-00-1F	04	C27	ES-310	18-Aug-10
TU179	03-E16-00-1F	05	C27	ES-310	18-Aug-10
TU179	03-E16-00-1F	06	C27	ES-310	18-Aug-10
TU179	03-E16-00-1F	07	C27	ES-310	18-Aug-10
TU179	03-E16-00-1F	08	C27	ES-310	18-Aug-10
TU179	03-E16-00-1F	09	C27	ES-310	18-Aug-10
TU179	03-E16-00-1F	10	C27	ES-310	18-Aug-10
TU179	03-E16-00-1F	11	C27	ES-310	18-Aug-10
TU179	03-E16-00-1F	12	C28	ES-311	18-Aug-10
TU179	03-E16-00-1F	13	C28	ES-311	18-Aug-10
TU179	03-E16-00-1F	14	C28	ES-311	18-Aug-10
TU179	03-E16-00-1F	15	C28	ES-311	18-Aug-10
TU179	03-E16-00-1F	16	C28	ES-311	18-Aug-10
TU179	03-E16-00-1F	17	C28	ES-311	18-Aug-10
TU179	03-E16-00-1F	18	C28	ES-311	18-Aug-10
TU179	03-E16-00-1F	19	C28	ES-311	18-Aug-10
TU179	03-E16-00-1F	20	C28	ES-311	18-Aug-10
TU179	03-E16-00-1F	21	C28	ES-311	18-Aug-10
TU179	03-E16-00-1F	22	C28	ES-311	18-Aug-10
TU179	03-E16-00-1F	23	C29	ES-312	19-Aug-10
TU179	03-E16-00-1F	24	C29	ES-312	19-Aug-10
TU179	03-E16-00-1F	25	C29	ES-312	19-Aug-10
TU179	03-E16-00-1H	10	C27	ES-310	18-Aug-10
TU179	03-E16-00-1H	11	C27	ES-310	18-Aug-10
TU179	03-E16-00-1H	12	C27	ES-310	18-Aug-10
TU179	03-E16-00-8M	23	C31	ES-314	20-Aug-10
TU179	03-E16-00-8M	24	C32	ES-315	20-Aug-10
TU179	03-E16-00-8M	25	C32	ES-315	20-Aug-10
TU179	03-E16-00-8M	26	C32	ES-315	23-Aug-10
TU179	03-E16-00-8M	27	C32	ES-315	23-Aug-10
TU180	03-E16-00-1F	26	C29	ES-312	19-Aug-10
TU180	03-E16-00-1F	27	C29	ES-312	19-Aug-10
TU180	03-E16-00-1F	28	C29	ES-312	19-Aug-10
TU180	03-E16-00-1F	29	C29	ES-312	19-Aug-10
TU180	03-E16-00-1F	30	C29	ES-312	19-Aug-10

TABLE 3-3

PARCEL UC3 EXCAVATED SOIL SUMMARY

Trench Survey Unit Identification No.	Trench Segment	Truck Load No.	RSY[a] Screening Pad	Assigned ES Identification No.	Date Excavated
TU180	03-E16-00-1F	31	C29	ES-312	19-Aug-10
TU180	03-E16-00-1F	32	C29	ES-312	19-Aug-10
TU180	03-E16-00-1F	33	C29	ES-312	19-Aug-10
TU180	03-E16-00-1F	34	C29	ES-312	19-Aug-10
TU180	03-E16-00-1F	35	C29	ES-312	19-Aug-10
TU180	03-E16-00-1F	36	C29	ES-312	19-Aug-10
TU180	03-E16-00-1F	37	C29	ES-312	19-Aug-10
TU180	03-E16-00-1F	38	C29	ES-312	19-Aug-10
TU180	03-E16-00-1F	39	C29	ES-312	19-Aug-10
TU180	03-E16-00-1F	40	C29	ES-312	19-Aug-10
TU180	03-E16-00-1F	41	C29	ES-312	19-Aug-10
TU180	03-E16-00-1F	42	C29	ES-312	19-Aug-10
TU180	03-E16-00-1F	43	C29	ES-312	19-Aug-10
TU180	03-E16-00-1F	44	C29	ES-312	19-Aug-10
TU180	03-E16-00-1F	45	C29	ES-312	19-Aug-10
TU180	03-E16-00-1F	46	C29	ES-312	19-Aug-10
TU180	03-E16-00-1F	47	C29	ES-312	19-Aug-10
TU180	03-E16-00-1F	48	C30	ES-313	19-Aug-10
TU180	03-E16-00-1F	49	C30	ES-313	19-Aug-10
TU180	03-E16-00-1F	50	C30	ES-313	20-Aug-10
TU180	03-E16-00-1F	51	C30	ES-313	20-Aug-10
TU180	03-E16-00-1F	52	C30	ES-313	20-Aug-10
TU180	03-E16-00-1F	53	C30	ES-313	20-Aug-10
TU180	03-E16-00-1F	54	C30	ES-313	20-Aug-10
TU180	03-E16-00-1F	55	C30	ES-313	20-Aug-10
TU180	03-E16-00-1F	56	C30	ES-313	20-Aug-10
TU180	03-E16-00-1F	57	C30	ES-313	20-Aug-10
TU180	03-E16-00-1F	58	C30	ES-313	20-Aug-10
TU180	03-E16-00-1F	59	C30	ES-313	20-Aug-10
TU180	03-E16-00-1F	60	C30	ES-313	20-Aug-10
TU180	03-E16-00-1H	01	C27	ES-310	18-Aug-10
TU180	03-E16-00-1H	02	C27	ES-310	18-Aug-10
TU180	03-E16-00-1H	03	C27	ES-310	18-Aug-10
TU180	03-E16-00-1H	04	C27	ES-310	18-Aug-10
TU180	03-E16-00-1H	05	C27	ES-310	18-Aug-10
TU180	03-E16-00-1H	06	C27	ES-310	18-Aug-10
TU180	03-E16-00-1H	07	C27	ES-310	18-Aug-10
TU180	03-E16-00-1H	08	C27	ES-310	18-Aug-10

TABLE 3-3

PARCEL UC3 EXCAVATED SOIL SUMMARY

Trench Survey Unit Identification No.	Trench Segment	Truck Load No.	RSY[a] Screening Pad	Assigned ES Identification No.	Date Excavated
TU180	03-E16-00-1H	09	C27	ES-310	18-Aug-10
TU180	03-E16-00-1H	13	C27	ES-310	18-Aug-10
TU180	03-E16-00-1H	14	C28	ES-311	19-Aug-10
TU180	03-E16-00-1H	15	C28	ES-311	19-Aug-10
TU180	03-E16-00-1H	16	C28	ES-311	19-Aug-10
TU180	03-E16-00-1H	17	C28	ES-311	19-Aug-10
TU180	03-E16-00-1H	18	C28	ES-311	19-Aug-10
TU180	03-E16-00-1H	19	C28	ES-311	19-Aug-10
TU180	03-E16-00-1H	20	C28	ES-311	19-Aug-10
TU180	03-E16-00-1H	21	C28	ES-311	19-Aug-10
TU180	03-E16-00-1H	22	C28	ES-311	19-Aug-10
TU180	03-E16-00-1H	23	C31	ES-314	20-Aug-10
TU180	03-E16-00-1H	24	C31	ES-314	20-Aug-10
TU180	03-E16-00-1H	25	C31	ES-314	20-Aug-10
TU180	03-E16-00-1H	26	C31	ES-314	20-Aug-10
TU180	03-E16-00-1H	27	C31	ES-314	20-Aug-10
TU180	03-E16-00-8M	28	C32	ES-315	23-Aug-10
TU180	03-E16-00-8M	29	C32	ES-315	23-Aug-10
TU180	03-E16-00-8M	30	C33	ES-316	24-Aug-10
TU180	03-E16-00-8M	31	C33	ES-316	24-Aug-10
TU180	03-E16-00-8M	32	C34	ES-317	24-Aug-10
TU180	03-E16-00-8M	33	C34	ES-317	25-Aug-10
TU180	03-E16-00-8M	34	C34	ES-317	25-Aug-10
TU180	03-E16-00-8M	35	C34	ES-317	25-Aug-10
TU181	03-E16-00-1F	61	C30	ES-313	20-Aug-10
TU181	03-E16-00-1F	62	C30	ES-313	20-Aug-10
TU181	03-E16-00-1F	63	C30	ES-313	20-Aug-10
TU181	03-E16-00-1F	64	C30	ES-313	20-Aug-10
TU181	03-E16-00-1F	65	C30	ES-313	20-Aug-10
TU181	03-E16-00-1F	66	C30	ES-313	20-Aug-10
TU181	03-E16-00-1F	67	C30	ES-313	20-Aug-10
TU181	03-E16-00-1F	68	C30	ES-313	20-Aug-10
TU181	03-E16-00-1F	69	C30	ES-313	20-Aug-10
TU181	03-E16-00-1F	70	C30	ES-313	20-Aug-10
TU181	03-E16-00-1F	71	C30	ES-313	20-Aug-10
TU181	03-E16-00-1F	72	C30	ES-313	20-Aug-10
TU181	03-E16-00-1F	73	C33	ES-316	23-Aug-10
TU181	03-E16-00-1F	74	C33	ES-316	23-Aug-10

TABLE 3-3

PARCEL UC3 EXCAVATED SOIL SUMMARY

Trench Survey Unit Identification No.	Trench Segment	Truck Load No.	RSY[a] Screening Pad	Assigned ES Identification No.	Date Excavated
TU181	03-E16-00-1F	75	C33	ES-316	23-Aug-10
TU181	03-E16-00-1F	76	C33	ES-316	23-Aug-10
TU181	03-E16-00-1F	77	C33	ES-316	23-Aug-10
TU181	03-E16-00-1F	78	C33	ES-316	23-Aug-10
TU181	03-E16-00-1F	79	C33	ES-316	23-Aug-10
TU181	03-E16-00-1F	80	C33	ES-316	23-Aug-10
TU181	03-E16-00-1H	28	C31	ES-314	20-Aug-10
TU181	03-E16-00-1H	29	C31	ES-314	20-Aug-10
TU181	03-E16-00-1H	30	C31	ES-314	20-Aug-10
TU181	03-E16-00-1H	31	C31	ES-314	20-Aug-10
TU181	03-E16-00-1H	32	C31	ES-314	20-Aug-10
TU181	03-E16-00-1H	33	C31	ES-314	20-Aug-10
TU181	03-E16-00-1H	34	C31	ES-314	20-Aug-10
TU181	03-E16-00-1H	35	C31	ES-314	20-Aug-10
TU181	03-E16-00-1H	36	C31	ES-314	20-Aug-10
TU181	03-E16-00-1H	37	C32	ES-315	20-Aug-10
TU181	03-E16-00-1H	38	C32	ES-315	20-Aug-10
TU181	03-E16-00-1H	39	C32	ES-315	23-Aug-10
TU181	03-E16-00-1H	40	C32	ES-315	23-Aug-10
TU181	03-E16-00-1H	41	C32	ES-315	23-Aug-10
TU181	03-E16-00-1H	42	C32	ES-315	23-Aug-10
TU181	03-E16-00-1H	43	C32	ES-315	23-Aug-10
TU181	03-E16-00-1H	44	C32	ES-315	23-Aug-10
TU181	03-E16-00-1H	45	C32	ES-315	23-Aug-10
TU181	03-E16-00-1H	46	C32	ES-315	23-Aug-10
TU181	03-E16-00-1H	47	C32	ES-315	23-Aug-10
TU181	03-E16-00-1H	48	C32	ES-315	23-Aug-10
TU181	03-E16-00-1H	49	C32	ES-315	23-Aug-10
TU181	03-E16-00-1H	50	C32	ES-315	23-Aug-10
TU181	03-E16-00-1H	51	C32	ES-315	23-Aug-10
TU181	03-E16-00-1H	52	C32	ES-315	23-Aug-10
TU181	03-E16-00-1H	53	C32	ES-315	23-Aug-10
TU181	03-E16-00-1H	54	C32	ES-315	23-Aug-10
TU181	03-E16-00-1H	55	C32	ES-315	23-Aug-10
TU181	03-E16-00-1H	56	C33	ES-316	23-Aug-10
TU181	03-E16-00-1H	57	C33	ES-316	24-Aug-10
TU181	03-E16-00-1H	58	C33	ES-316	24-Aug-10
TU181	03-E16-00-1H	59	C33	ES-316	24-Aug-10

TABLE 3-3

PARCEL UC3 EXCAVATED SOIL SUMMARY

Trench Survey Unit Identification No.	Trench Segment	Truck Load No.	RSY[a] Screening Pad	Assigned ES Identification No.	Date Excavated
TU181	03-E16-00-1H	60	C33	ES-316	24-Aug-10
TU181	03-E16-00-1H	61	C33	ES-316	24-Aug-10
TU181	03-E16-00-1H	62	C33	ES-316	24-Aug-10
TU181	03-E16-00-1H	63	C33	ES-316	24-Aug-10
TU181	03-E16-00-1H	64	C33	ES-316	24-Aug-10
TU181	03-E16-00-1H	65	C33	ES-316	24-Aug-10
TU181	03-E16-00-1T	01	C33	ES-316	24-Aug-10
TU181	03-E16-00-1T	02	C33	ES-316	24-Aug-10
TU181	03-E16-00-1T	03	C34	ES-317	24-Aug-10
TU181	03-E16-00-1T	04	C34	ES-317	24-Aug-10
TU181	03-E16-00-1T	05	C34	ES-317	24-Aug-10
TU181	03-E16-00-1T	06	C34	ES-317	24-Aug-10
TU181	03-E16-00-1T	07	C34	ES-317	24-Aug-10
TU181	03-E16-00-1T	08	C34	ES-317	24-Aug-10
TU181	03-E16-00-1T	09	C34	ES-317	24-Aug-10
TU181	03-E16-00-1T	10	C34	ES-317	24-Aug-10
TU181	03-E16-00-1T	11	C34	ES-317	24-Aug-10
TU181	03-E16-00-2B	01	D08	ES-293	05-Aug-10
TU181	03-E16-00-8M	36	C34	ES-317	25-Aug-10
TU181	03-E16-00-8M	37	C35	ES-318	25-Aug-10
TU181	03-E16-00-8M	38	C35	ES-318	25-Aug-10
TU181	03-E16-00-8M	39	C35	ES-318	25-Aug-10
TU181	03-E16-00-8M	40	C35	ES-318	25-Aug-10
TU181	03-E16-00-8M	41	C35	ES-318	26-Aug-10
TU181	03-E16-00-8M	42	C35	ES-318	26-Aug-10
TU181	03-E16-00-8M	43	C35	ES-318	26-Aug-10
TU181	03-E16-00-8M	44	C35	ES-318	26-Aug-10
TU181	03-E16-00-8M	45	C35	ES-318	26-Aug-10
TU181	03-E16-00-8M	46	C36	ES-319	26-Aug-10
TU181	03-E16-00-8M	47	C36	ES-319	26-Aug-10
TU181	03-E16-00-8M	48	C36	ES-319	26-Aug-10
TU182	03-E16-00-1H	66	C33	ES-316	24-Aug-10
TU182	03-E16-00-1H	67	C33	ES-316	24-Aug-10
TU182	03-E16-00-1H	68	C33	ES-316	24-Aug-10
TU182	03-E16-00-1H	69	C34	ES-317	24-Aug-10
TU182	03-E16-00-1H	70	C34	ES-317	25-Aug-10
TU182	03-E16-00-1H	71	C34	ES-317	25-Aug-10
TU182	03-E16-00-1H	72	C34	ES-317	25-Aug-10

TABLE 3-3

PARCEL UC3 EXCAVATED SOIL SUMMARY

Trench Survey Unit Identification No.	Trench Segment	Truck Load No.	RSY[a] Screening Pad	Assigned ES Identification No.	Date Excavated
TU182	03-E16-00-1H	73	C34	ES-317	25-Aug-10
TU182	03-E16-00-1H	74	C34	ES-317	25-Aug-10
TU182	03-E16-00-1H	75	C34	ES-317	25-Aug-10
TU182	03-E16-00-1H	76	C34	ES-317	25-Aug-10
TU182	03-E16-00-1H	77	C34	ES-317	25-Aug-10
TU182	03-E16-00-1H	78	C34	ES-317	25-Aug-10
TU182	03-E16-00-1H	79	C34	ES-317	25-Aug-10
TU182	03-E16-00-1H	80	C35	ES-318	25-Aug-10
TU182	03-E16-00-1H	81	C35	ES-318	25-Aug-10
TU182	03-E16-00-1H	82	C35	ES-318	25-Aug-10
TU182	03-E16-00-1H	83	C35	ES-318	25-Aug-10
TU182	03-E16-00-1H	84	C35	ES-318	25-Aug-10
TU182	03-E16-00-1H	85	C35	ES-318	25-Aug-10
TU182	03-E16-00-1H	86	C35	ES-318	25-Aug-10
TU182	03-E16-00-1H	87	C35	ES-318	25-Aug-10
TU182	03-E16-00-1H	88	C35	ES-318	25-Aug-10
TU182	03-E16-00-1H	89	C35	ES-318	26-Aug-10
TU182	03-E16-00-1H	90	C35	ES-318	26-Aug-10
TU182	03-E16-00-1H	91	C35	ES-318	26-Aug-10
TU182	03-E16-00-1H	92	C35	ES-318	26-Aug-10
TU182	03-E16-00-1H	93	C35	ES-318	26-Aug-10
TU182	03-E16-00-1H	94	C35	ES-318	26-Aug-10
TU182	03-E16-00-1H	95	C36	ES-319	26-Aug-10
TU182	03-E16-00-1H	96	C36	ES-319	26-Aug-10
TU182	03-E16-00-1H	97	C36	ES-319	26-Aug-10
TU182	03-E16-00-1H	98	C36	ES-319	26-Aug-10
TU182	03-E16-00-1H	99	C36	ES-319	26-Aug-10
TU182	03-E16-00-1H	100	C36	ES-319	26-Aug-10
TU182	03-E16-00-1H	101	C36	ES-319	26-Aug-10
TU182	03-E16-00-1H	102	C36	ES-319	26-Aug-10
TU182	03-E16-00-1H	103	C36	ES-319	26-Aug-10
TU182	03-E16-00-1H	104	C36	ES-319	26-Aug-10
TU182	03-E16-00-1H	105	C37	ES-320	26-Aug-10
TU182	03-E16-00-1H	106	C37	ES-320	27-Aug-10
TU182	03-E16-00-1H	107	C37	ES-320	27-Aug-10
TU182	03-E16-00-1H	108	C37	ES-320	27-Aug-10
TU182	03-E16-00-1H	109	C37	ES-320	27-Aug-10
TU182	03-E16-00-1H	110	C37	ES-320	27-Aug-10

TABLE 3-3

PARCEL UC3 EXCAVATED SOIL SUMMARY

Trench Survey Unit Identification No.	Trench Segment	Truck Load No.	RSY[a] Screening Pad	Assigned ES Identification No.	Date Excavated
TU182	03-E16-00-1H	111	C37	ES-320	27-Aug-10
TU182	03-E16-00-2A	33	C36	ES-319	26-Aug-10
TU182	03-E16-00-2A	34	C36	ES-319	26-Aug-10
TU182	03-E16-00-2A	35	C36	ES-319	26-Aug-10
TU182	03-E16-00-2A	36	C36	ES-319	26-Aug-10
TU182	03-E16-00-2A	37	C36	ES-319	26-Aug-10
TU182	03-E16-00-2A	38	C36	ES-319	26-Aug-10
TU182	03-E16-00-2A	39	C36	ES-319	26-Aug-10
TU182	03-E16-00-2C	01	C37	ES-320	27-Aug-10
TU182	03-E16-00-2C	02	C37	ES-320	27-Aug-10
TU182	03-E16-00-2C	03	C37	ES-320	27-Aug-10
TU182	03-E16-00-2C	04	C37	ES-320	27-Aug-10
TU182	03-E16-00-2C	05	C37	ES-320	27-Aug-10
TU182	03-E16-00-2C	06	C37	ES-320	27-Aug-10
TU182	03-E16-00-2C	07	C10	ES-321	27-Aug-10
TU182	03-E16-00-2C	08	C10	ES-321	27-Aug-10
TU182	03-E16-00-2C	09	C10	ES-321	27-Aug-10
TU182	03-E16-00-2C	10	C10	ES-321	30-Aug-10
TU182	03-E16-00-2C	11	C10	ES-321	30-Aug-10
TU182	03-E16-00-2C	12	C10	ES-321	30-Aug-10
TU182	03-E16-00-2C	13	C11	ES-322	30-Aug-10
TU182	03-E16-00-2D	01	C36	ES-319	26-Aug-10
TU182	03-E16-00-2E	02	C12	ES-271	02-Apr-10
TU182	03-E16-00-8M	49	C36	ES-319	26-Aug-10
TU182	03-E16-00-8M	50	C37	ES-320	26-Aug-10
TU182	03-E16-00-8M	51	C37	ES-320	27-Aug-10
TU182	03-E16-00-8M	52	C37	ES-320	27-Aug-10
TU182	03-E16-00-8M	53	C37	ES-320	27-Aug-10
TU182	03-E16-00-8M	54	C37	ES-320	27-Aug-10
TU182	03-E16-00-8M	55	C37	ES-320	27-Aug-10
TU182	03-E16-00-8M	56	C37	ES-320	27-Aug-10
TU182	03-E16-00-8M	57	C10	ES-321	27-Aug-10
TU182	03-E16-00-8M	58	C10	ES-321	27-Aug-10
TU182	03-E16-00-8M	59	C10	ES-321	27-Aug-10
TU182	03-E16-00-8M	60	C10	ES-321	27-Aug-10
TU182	03-E16-00-8M	61	C10	ES-321	27-Aug-10
TU182	03-E16-00-8M	62	C10	ES-321	30-Aug-10
TU182	03-E16-00-8M	63	C10	ES-321	30-Aug-10

TABLE 3-3

PARCEL UC3 EXCAVATED SOIL SUMMARY

Trench Survey Unit Identification No.	Trench Segment	Truck Load No.	RSY[a] Screening Pad	Assigned ES Identification No.	Date Excavated
TU182	03-E16-00-8M	64	C10	ES-321	30-Aug-10
TU182	03-E16-00-8M	65	C11	ES-322	30-Aug-10
TU183	03-E16-00-1H	112	C37	ES-320	27-Aug-10
TU183	03-E16-00-1H	113	C37	ES-320	27-Aug-10
TU183	03-E16-00-1H	114	C37	ES-320	27-Aug-10
TU183	03-E16-00-1H	115	C37	ES-320	27-Aug-10
TU183	03-E16-00-1H	116	C37	ES-320	27-Aug-10
TU183	03-E16-00-1H	117	C10	ES-321	27-Aug-10
TU183	03-E16-00-1H	118	C10	ES-321	27-Aug-10
TU183	03-E16-00-1H	119	C10	ES-321	27-Aug-10
TU183	03-E16-00-1H	120	C10	ES-321	27-Aug-10
TU183	03-E16-00-1H	121	C10	ES-321	27-Aug-10
TU183	03-E16-00-1H	122	C10	ES-321	27-Aug-10
TU183	03-E16-00-1H	123	C10	ES-321	27-Aug-10
TU183	03-E16-00-1H	124	C10	ES-321	30-Aug-10
TU183	03-E16-00-1H	125	C10	ES-321	30-Aug-10
TU183	03-E16-00-1H	126	C10	ES-321	30-Aug-10
TU183	03-E16-00-1H	127	C10	ES-321	30-Aug-10
TU183	03-E16-00-1H	128	C11	ES-322	30-Aug-10
TU183	03-E16-00-1H	129	C11	ES-322	30-Aug-10
TU183	03-E16-00-1H	130	C11	ES-322	30-Aug-10
TU183	03-E16-00-1H	131	C11	ES-322	30-Aug-10
TU183	03-E16-00-1H	132	C11	ES-322	30-Aug-10
TU183	03-E16-00-1H	133	C11	ES-322	30-Aug-10
TU183	03-E16-00-1H	134	C11	ES-322	30-Aug-10
TU183	03-E16-00-1H	135	C11	ES-322	31-Aug-10
TU183	03-E16-00-1H	136	C11	ES-322	31-Aug-10
TU183	03-E16-00-1H	137	C11	ES-322	31-Aug-10
TU183	03-E16-00-1H	138	C11	ES-322	31-Aug-10
TU183	03-E16-00-1H	139	C12	ES-323	31-Aug-10
TU183	03-E16-00-1H	140	C12	ES-323	31-Aug-10
TU183	03-E16-00-1H	141	C12	ES-323	31-Aug-10
TU183	03-E16-00-1H	142	C12	ES-323	31-Aug-10
TU183	03-E16-00-1H	143	C12	ES-323	31-Aug-10
TU183	03-E16-00-1H	144	C12	ES-323	31-Aug-10
TU183	03-E16-00-1H	145	C12	ES-323	31-Aug-10
TU183	03-E16-00-1H	146	C12	ES-323	31-Aug-10
TU183	03-E16-00-2C	14	C11	ES-322	30-Aug-10

TABLE 3-3

PARCEL UC3 EXCAVATED SOIL SUMMARY

Trench Survey Unit Identification No.	Trench Segment	Truck Load No.	RSY[a] Screening Pad	Assigned ES Identification No.	Date Excavated
TU183	03-E16-00-2C	15	C11	ES-322	30-Aug-10
TU183	03-E16-00-2C	16	C11	ES-322	30-Aug-10
TU183	03-E16-00-2C	17	C11	ES-322	30-Aug-10
TU183	03-E16-00-2C	18	C11	ES-322	30-Aug-10
TU183	03-E16-00-2T	01	C12	ES-271	01-Apr-10
TU183	03-E16-00-3A	24	C15	ES-302	11-Aug-10
TU183	03-E16-00-3A	25	C15	ES-302	11-Aug-10
TU183	03-E16-00-3A	26	C15	ES-302	11-Aug-10
TU183	03-E16-00-3A	27	C15	ES-302	11-Aug-10
TU183	03-E16-00-3A	28	C15	ES-302	11-Aug-10
TU183	03-E16-00-3A	29	C15	ES-302	11-Aug-10
TU183	03-E16-00-3A	30	C15	ES-302	11-Aug-10
TU183	03-E16-00-3A	31	C15	ES-302	11-Aug-10
TU183	03-E16-00-3A	32	C15	ES-302	11-Aug-10
TU183	03-E16-00-3A	33	C15	ES-302	11-Aug-10
TU183	03-E16-00-3A	34	C15	ES-302	11-Aug-10
TU183	03-E16-00-3A	35	C15	ES-302	11-Aug-10
TU183	03-E16-00-3A	36	C15	ES-302	11-Aug-10
TU183	03-E16-00-3A	37	C15	ES-302	11-Aug-10
TU183	03-E16-00-3A	38	C15	ES-302	11-Aug-10
TU183	03-E16-00-3A	39	C15	ES-302	11-Aug-10
TU183	03-E16-00-3A	40	C15	ES-302	11-Aug-10
TU183	03-E16-00-3A	41	C15	ES-302	11-Aug-10
TU183	03-E16-00-3A	42	C15	ES-302	11-Aug-10
TU183	03-E16-00-3A	43	C15	ES-302	11-Aug-10
TU183	03-E16-00-3A	44	C09	ES-324	01-Sep-10
TU183	03-E16-00-3A	45	C09	ES-324	01-Sep-10
TU183	03-E16-00-3A	46	C09	ES-324	01-Sep-10
TU183	03-E16-00-3B	01	C11	ES-322	30-Aug-10
TU183	03-E16-00-3B	02	C11	ES-322	31-Aug-10
TU183	03-E16-00-3B	03	C11	ES-322	31-Aug-10
TU183	03-E16-00-3B	04	C12	ES-323	31-Aug-10
TU183	03-E16-00-3B	05	C12	ES-323	31-Aug-10
TU183	03-E16-00-3B	06	C12	ES-323	31-Aug-10
TU183	03-E16-00-3B	07	C12	ES-323	31-Aug-10
TU183	03-E16-00-3D	01	C12	ES-323	31-Aug-10
TU183	03-E16-00-3D	02	C12	ES-323	31-Aug-10
TU183	03-E16-00-3D	03	C12	ES-323	31-Aug-10

TABLE 3-3

PARCEL UC3 EXCAVATED SOIL SUMMARY

Trench Survey Unit Identification No.	Trench Segment	Truck Load No.	RSY[a] Screening Pad	Assigned ES Identification No.	Date Excavated
TU183	03-E16-00-3D	04	C12	ES-323	31-Aug-10
TU183	03-E16-00-3D	05	C12	ES-323	31-Aug-10
TU183	03-E16-00-3D	06	C12	ES-323	01-Sep-10
TU183	03-E16-00-8M	66	C11	ES-322	30-Aug-10
TU183	03-E16-00-8M	67	C11	ES-322	30-Aug-10
TU183	03-E16-00-8M	68	C11	ES-322	30-Aug-10
TU183	03-E16-00-8M	69	C11	ES-322	30-Aug-10
TU183	03-E16-74-2M	01	D06	ES-295	30-Aug-10
TU183	03-E16-74-2M	02	D06	ES-295	30-Aug-10
TU183	03-E16-74-2M	03	D06	ES-295	30-Aug-10
TU183	03-E16-74-2M	04	D06	ES-295	31-Aug-10
TU183	03-E16-74-2M	05	D06	ES-295	31-Aug-10
TU183	03-E16-74-2M	06	D06	ES-295	31-Aug-10
TU183	03-E16-74-2Q	01	D06	ES-295	31-Aug-10
TU183	03-E16-74-2Q	02	D06	ES-295	31-Aug-10
TU184	03-E16-00-1H	147	C12	ES-323	01-Sep-10
TU184	03-E16-00-1H	148	C12	ES-323	01-Sep-10
TU184	03-E16-00-1H	149	C12	ES-323	01-Sep-10
TU184	03-E16-00-1H	150	C12	ES-323	01-Sep-10
TU184	03-E16-00-1H	166	C20	ES-325	02-Sep-10
TU184	03-E16-00-1H	167	C20	ES-325	02-Sep-10
TU184	03-E16-00-1H	168	C20	ES-325	02-Sep-10
TU184	03-E16-00-1H	169	C20	ES-325	02-Sep-10
TU184	03-E16-00-1H	170	C01	ES-326	02-Sep-10
TU184	03-E16-00-1H	171	C01	ES-326	02-Sep-10
TU184	03-E16-00-1H	172	C01	ES-326	02-Sep-10
TU184	03-E16-00-1H	173	C01	ES-326	02-Sep-10
TU184	03-E16-00-1H	174	C01	ES-326	02-Sep-10
TU184	03-E16-00-1H	175	C01	ES-326	02-Sep-10
TU184	03-E16-00-1H	176	C01	ES-326	02-Sep-10
TU184	03-E16-00-1H	177	C01	ES-326	02-Sep-10
TU184	03-E16-00-1H	178	C01	ES-326	02-Sep-10
TU184	03-E16-00-1H	179	C01	ES-326	02-Sep-10
TU184	03-E16-00-1H	180	C01	ES-326	02-Sep-10
TU184	03-E16-00-1H	181	C02	ES-327	02-Sep-10
TU184	03-E16-00-1H	182	C02	ES-327	02-Sep-10
TU184	03-E16-00-1H	183	C02	ES-327	02-Sep-10
TU184	03-E16-00-1H	184	C02	ES-327	02-Sep-10

TABLE 3-3

PARCEL UC3 EXCAVATED SOIL SUMMARY

Trench Survey Unit Identification No.	Trench Segment	Truck Load No.	RSY[a] Screening Pad	Assigned ES Identification No.	Date Excavated
TU184	03-E16-00-1H	185	C02	ES-327	02-Sep-10
TU184	03-E16-00-1H	186	C02	ES-327	02-Sep-10
TU184	03-E16-00-1H	187	C02	ES-327	02-Sep-10
TU184	03-E16-00-1H	188	C02	ES-327	02-Sep-10
TU184	03-E16-00-2U	01	C12	ES-271	05-Apr-10
TU184	03-E16-00-2U	02	C12	ES-271	05-Apr-10
TU184	03-E16-00-2U	03	C12	ES-271	05-Apr-10
TU184	03-E16-00-2U	04	C12	ES-271	05-Apr-10
TU184	03-E16-00-3A	47	C09	ES-324	01-Sep-10
TU184	03-E16-00-3A	48	C09	ES-324	01-Sep-10
TU184	03-E16-00-3A	49	C09	ES-324	01-Sep-10
TU184	03-E16-00-3A	50	C09	ES-324	01-Sep-10
TU184	03-E16-00-3A	51	C09	ES-324	01-Sep-10
TU184	03-E16-00-3A	52	C09	ES-324	01-Sep-10
TU184	03-E16-00-3A	53	C09	ES-324	01-Sep-10
TU184	03-E16-00-3A	54	C09	ES-324	01-Sep-10
TU184	03-E16-00-3A	55	C09	ES-324	01-Sep-10
TU184	03-E16-00-3A	56	C09	ES-324	01-Sep-10
TU184	03-E16-00-3A	57	C09	ES-324	01-Sep-10
TU184	03-E16-00-3D	07	C12	ES-323	01-Sep-10
TU184	03-E16-00-3D	08	C12	ES-323	01-Sep-10
TU184	03-E16-00-3D	09	C12	ES-323	01-Sep-10
TU184	03-E16-00-3D	10	C09	ES-324	01-Sep-10
TU184	03-E16-00-3D	11	C09	ES-324	01-Sep-10
TU184	03-E16-00-3D	12	C09	ES-324	01-Sep-10
TU184	03-E16-00-3D	13	C09	ES-324	01-Sep-10
TU184	03-E16-00-3D	14	C20	ES-325	01-Sep-10
TU184	03-E16-00-3D	15	C20	ES-325	01-Sep-10
TU184	03-E16-00-3D	16	C20	ES-325	01-Sep-10
TU184	03-E16-00-3D	17	C20	ES-325	01-Sep-10
TU184	03-E16-00-3D	18	C20	ES-325	01-Sep-10
TU184	03-E16-00-3D	19	C20	ES-325	02-Sep-10
TU184	03-E16-00-3D	20	C20	ES-325	02-Sep-10
TU184	03-E16-00-3E	01	C20	ES-325	02-Sep-10
TU184	03-E16-00-3E	02	C20	ES-325	02-Sep-10
TU184	03-E16-56-2U	01	C32	ES-270	05-Apr-10
TU184	03-E16-56-2U	02	C32	ES-270	05-Apr-10
TU184	03-E16-56-2U	03	C32	ES-270	05-Apr-10

TABLE 3-3

PARCEL UC3 EXCAVATED SOIL SUMMARY

Trench Survey Unit Identification No.	Trench Segment	Truck Load No.	RSY[a] Screening Pad	Assigned ES Identification No.	Date Excavated
TU184	03-E16-56-2U	04	C32	ES-270	05-Apr-10
TU184	03-E16-56-2U	05	C32	ES-270	05-Apr-10
TU184	03-E16-56-2U	06	C32	ES-270	05-Apr-10
TU184	03-E16-56-2U	07	C32	ES-270	05-Apr-10
TU184	03-E16-56-2U	08	D04	ES-290	26-Jul-10
TU184	03-E16-56-2U	09	D04	ES-290	26-Jul-10
TU184	03-E16-56-2U	10	D04	ES-290	26-Jul-10
TU184	03-E16-56-2U	11	D04	ES-290	27-Jul-10
TU184	03-E16-56-2U	12	D04	ES-290	27-Jul-10
TU184	03-E16-56-2U	13	D04	ES-290	27-Jul-10
TU184	03-E16-56-2U	14	D04	ES-290	27-Jul-10
TU184	03-E16-56-2U	15	D04	ES-290	27-Jul-10
TU184	03-E16-56-2U	16	D04	ES-290	27-Jul-10
TU184	03-E16-56-2U	17	D04	ES-290	27-Jul-10
TU184	03-E16-56-2U	18	D04	ES-290	27-Jul-10
TU184	03-E16-56-2U	19	D04	ES-290	27-Jul-10
TU184	03-E16-56-2U	20	D04	ES-290	27-Jul-10
TU184	03-E16-56-2U	21	D04	ES-290	27-Jul-10
TU184	03-E16-56-2U	22	D04	ES-290	27-Jul-10
TU184	03-E16-56-2U	23	D04	ES-290	27-Jul-10
TU184	03-E16-56-2U	24	D04	ES-290	27-Jul-10
TU184	03-E16-56-2U	25	D04	ES-290	27-Jul-10
TU184	03-E16-56-2U	26	D04	ES-290	27-Jul-10
TU184	03-E16-56-2U	27	D04	ES-290	27-Jul-10
TU184	03-E16-56-2U	28	D04	ES-290	28-Jul-10
TU184	03-E16-56-2U	29	D04	ES-290	28-Jul-10
TU184	03-E16-56-2U	30	D04	ES-290	28-Jul-10
TU184	03-E16-56-2U	31	D04	ES-290	28-Jul-10
TU184	03-E16-56-2U	32	D04	ES-290	28-Jul-10
TU184	03-E16-56-2U	33	D04	ES-290	28-Jul-10
TU184	03-E16-56-2U	34	D04	ES-290	28-Jul-10
TU184	03-E16-56-2U	35	D03	ES-291	28-Jul-10
TU184	03-E16-56-2U	36	D03	ES-291	28-Jul-10
TU184	03-E16-56-2U	37	D03	ES-291	28-Jul-10
TU184	03-E16-56-2U	38	D03	ES-291	28-Jul-10
TU184	03-E16-56-2U	39	D03	ES-291	28-Jul-10
TU184	03-E16-56-2U	40	D03	ES-291	28-Jul-10
TU184	03-E16-56-2U	41	D03	ES-291	28-Jul-10

TABLE 3-3

PARCEL UC3 EXCAVATED SOIL SUMMARY

Trench Survey Unit Identification No.	Trench Segment	Truck Load No.	RSY[a] Screening Pad	Assigned ES Identification No.	Date Excavated
TU184	03-E16-56-2U	42	D03	ES-291	28-Jul-10
TU184	03-E16-56-2U	43	D03	ES-291	28-Jul-10
TU184	03-E16-56-2U	44	D03	ES-291	28-Jul-10
TU184	03-E16-56-2U	45	D03	ES-291	28-Jul-10
TU184	03-E16-56-2U	46	D03	ES-291	28-Jul-10
TU184	03-E16-56-2U	47	D03	ES-291	28-Jul-10
TU184	03-E16-56-2U	48	D02	ES-292	28-Jul-10
TU184	03-E16-56-2U	49	D02	ES-292	28-Jul-10
TU184	03-E16-56-2U	50	D02	ES-292	28-Jul-10
TU184	03-E16-56-2U	51	D02	ES-292	28-Jul-10
TU184	03-E16-56-2U	52	D02	ES-292	28-Jul-10
TU184	03-E16-56-2U	53	D02	ES-292	28-Jul-10
TU184	03-E16-56-2U	54	D02	ES-292	28-Jul-10
TU184	03-E16-74-3F	01	D06	ES-295	02-Sep-10
TU184	03-E16-74-3F	02	D06	ES-295	02-Sep-10
TU184	03-E16-74-3F	03	D06	ES-295	02-Sep-10
TU184	03-E16-74-3F	04	D06	ES-295	02-Sep-10
TU185	03-E16-00-4P	01	C02	ES-327	09-Sep-10
TU185	03-E16-00-5B	01	D09	ES-329	10-Sep-10
TU185	03-E16-00-5B	02	D09	ES-329	10-Sep-10
TU185	03-E16-00-5C	01	D09	ES-329	10-Sep-10
TU185	03-E16-00-5C	02	D09	ES-329	10-Sep-10
TU185	03-E16-00-5C	03	D09	ES-329	10-Sep-10
TU185	03-E16-00-5C	04	D09	ES-329	10-Sep-10
TU185	03-E16-00-5D	01	D09	ES-329	10-Sep-10
TU185	03-E16-00-5D	02	D09	ES-329	10-Sep-10
TU185	03-E16-00-5D	03	D09	ES-329	10-Sep-10
TU185	03-E16-00-5D	04	D09	ES-329	10-Sep-10
TU185	03-E16-00-5E	01	D09	ES-329	10-Sep-10
TU185	03-E16-00-5E	02	D09	ES-329	10-Sep-10
TU185	03-E16-00-5E	03	D09	ES-329	10-Sep-10
TU185	03-E16-00-5E	04	D09	ES-329	10-Sep-10
TU185	03-E16-00-5E	05	D09	ES-329	10-Sep-10
TU185	03-E16-00-5E	06	D09	ES-329	10-Sep-10
TU185	03-E16-00-5E	07	D08	ES-330	10-Sep-10
TU185	03-E16-00-5E	08	D08	ES-330	10-Sep-10
TU185	03-E16-00-5E	09	D08	ES-330	13-Sep-10
TU185	03-E16-00-5E	10	D03	ES-333	15-Sep-10

TABLE 3-3

PARCEL UC3 EXCAVATED SOIL SUMMARY

Trench Survey Unit Identification No.	Trench Segment	Truck Load No.	RSY[a] Screening Pad	Assigned ES Identification No.	Date Excavated
TU185	03-E16-00-5E	11	D03	ES-333	15-Sep-10
TU185	03-E16-00-5E	12	D03	ES-333	15-Sep-10
TU185	03-E16-00-5E	13	D03	ES-333	15-Sep-10
TU185	03-E16-00-5E	14	D04	ES-334	15-Sep-10
TU185	03-E16-00-5E	15	D04	ES-334	15-Sep-10
TU185	03-E16-00-5E	16	D04	ES-334	15-Sep-10
TU185	03-E16-00-5F	01	D08	ES-330	10-Sep-10
TU185	03-E16-00-5F	02	D08	ES-330	10-Sep-10
TU185	03-E16-00-5F	03	D08	ES-330	10-Sep-10
TU185	03-E16-00-5F	04	D08	ES-330	10-Sep-10
TU185	03-E16-00-5F	05	D08	ES-330	10-Sep-10
TU185	03-E16-00-5G	01	D08	ES-330	13-Sep-10
TU185	03-E16-00-5G	02	D08	ES-330	13-Sep-10
TU185	03-E16-00-5G	03	D08	ES-330	13-Sep-10
TU185	03-E16-00-5G	04	D08	ES-330	13-Sep-10
TU185	03-E16-00-5G	05	D08	ES-330	13-Sep-10
TU185	03-E16-00-5G	06	D02	ES-332	13-Sep-10
TU185	03-E16-00-5G	07	D02	ES-332	13-Sep-10
TU185	03-E16-00-5G	08	D02	ES-332	13-Sep-10
TU185	03-E16-00-5G	09	D02	ES-332	13-Sep-10
TU185	03-E16-00-5G	10	D02	ES-332	13-Sep-10
TU185	03-E16-00-5G	11	D02	ES-332	13-Sep-10
TU185	03-E16-00-5H	01	D08	ES-330	13-Sep-10
TU185	03-E16-00-5H	02	D08	ES-330	13-Sep-10
TU185	03-E16-00-5H	03	D08	ES-330	13-Sep-10
TU185	03-E16-00-5H	04	D08	ES-330	13-Sep-10
TU185	03-E16-00-5H	05	D08	ES-330	13-Sep-10
TU185	03-E16-00-5H	06	D02	ES-332	13-Sep-10
TU185	03-E16-00-5H	07	D02	ES-332	13-Sep-10
TU185	03-E16-00-5H	08	D02	ES-332	13-Sep-10
TU185	03-E16-00-5H	09	D02	ES-332	13-Sep-10
TU185	03-E16-00-5H	10	D02	ES-332	13-Sep-10
TU185	03-E16-00-5H	11	D02	ES-332	13-Sep-10
TU185	03-E16-00-5H	12	D02	ES-332	14-Sep-10
TU185	03-E16-00-5H	13	D02	ES-332	14-Sep-10
TU185	03-E16-00-5H	14	D02	ES-332	14-Sep-10
TU185	03-E16-00-5H	15	D02	ES-332	14-Sep-10
TU185	03-E16-00-5H	16	D02	ES-332	14-Sep-10

TABLE 3-3

PARCEL UC3 EXCAVATED SOIL SUMMARY

Trench Survey Unit Identification No.	Trench Segment	Truck Load No.	RSY[a] Screening Pad	Assigned ES Identification No.	Date Excavated
TU185	03-E16-00-5H	17	D02	ES-332	14-Sep-10
TU185	03-E16-00-5H	18	D02	ES-332	14-Sep-10
TU185	03-E16-00-5H	19	D02	ES-332	14-Sep-10
TU185	03-E16-00-5H	20	D02	ES-332	14-Sep-10
TU185	03-E16-00-5I	01	C02	ES-327	09-Sep-10
TU185	03-E16-00-5I	02	C02	ES-327	09-Sep-10
TU185	03-E16-00-5I	03	C02	ES-327	09-Sep-10
TU185	03-E16-00-5I	04	C02	ES-327	09-Sep-10
TU185	03-E16-00-5I	05	C02	ES-327	09-Sep-10
TU185	03-E16-00-5I	06	D09	ES-329	10-Sep-10
TU185	03-E16-00-5I	07	D09	ES-329	10-Sep-10
TU185	03-E16-00-5I	08	D09	ES-329	10-Sep-10
TU185	03-E16-00-5I	09	D03	ES-333	14-Sep-10
TU185	03-E16-00-5I	10	D03	ES-333	14-Sep-10
TU185	03-E16-00-5I	11	D03	ES-333	14-Sep-10
TU185	03-E16-00-5I	12	D03	ES-333	14-Sep-10
TU185	03-E16-00-5I	13	D03	ES-333	14-Sep-10
TU185	03-E16-00-5I	14	D03	ES-333	14-Sep-10
TU185	03-E16-00-5I	15	D03	ES-333	15-Sep-10
TU185	03-E16-00-5I	16	D03	ES-333	15-Sep-10
TU185	03-E16-00-5I	17	D03	ES-333	15-Sep-10
TU185	03-E16-00-5I	18	D03	ES-333	15-Sep-10
TU185	03-E16-00-5I	19	D03	ES-333	15-Sep-10
TU185	03-E16-00-5I	20	D03	ES-333	15-Sep-10
TU185	03-E16-00-5J	01	D08	ES-330	13-Sep-10
TU185	03-E16-00-5J	02	D08	ES-330	13-Sep-10
TU185	03-E16-00-5J	03	D08	ES-330	13-Sep-10
TU185	03-E16-00-5J	04	D08	ES-330	13-Sep-10
TU185	03-E16-00-5J	05	D08	ES-330	13-Sep-10
TU185	03-E16-00-5J	06	D08	ES-330	13-Sep-10
TU185	03-E16-00-5K	01	D09	ES-329	10-Sep-10
TU185	03-E16-00-5K	02	D09	ES-329	10-Sep-10
TU185	03-E16-00-5K	03	D09	ES-329	10-Sep-10
TU185	03-E16-00-5K	04	D09	ES-329	10-Sep-10
TU185	03-E16-00-5K	05	D09	ES-329	10-Sep-10
TU185	03-E16-00-5K	06	D09	ES-329	10-Sep-10
TU185	03-E16-00-5K	07	D08	ES-330	10-Sep-10
TU185	03-E16-00-5K	08	D08	ES-330	10-Sep-10

TABLE 3-3

PARCEL UC3 EXCAVATED SOIL SUMMARY

Trench Survey Unit Identification No.	Trench Segment	Truck Load No.	RSY[a] Screening Pad	Assigned ES Identification No.	Date Excavated
TU185	03-E16-00-5K	09	D03	ES-333	15-Sep-10
TU185	03-E16-00-5K	10	D03	ES-333	15-Sep-10
TU185	03-E16-00-5K	11	D03	ES-333	15-Sep-10
TU185	03-E16-00-5K	12	D03	ES-333	15-Sep-10
TU185	03-E16-00-5K	13	D03	ES-333	15-Sep-10
TU185	03-E16-00-5K	14	D03	ES-333	15-Sep-10
TU187	03-E16-00-1H	151	C09	ES-324	01-Sep-10
TU187	03-E16-00-1H	152	C09	ES-324	01-Sep-10
TU187	03-E16-00-1H	153	C09	ES-324	01-Sep-10
TU187	03-E16-00-1H	154	C09	ES-324	01-Sep-10
TU187	03-E16-00-1H	155	C09	ES-324	01-Sep-10
TU187	03-E16-00-1H	156	C09	ES-324	01-Sep-10
TU187	03-E16-00-1H	157	C09	ES-324	01-Sep-10
TU187	03-E16-00-1H	158	C20	ES-325	01-Sep-10
TU187	03-E16-00-1H	159	C20	ES-325	01-Sep-10
TU187	03-E16-00-1H	160	C20	ES-325	01-Sep-10
TU187	03-E16-00-1H	161	C20	ES-325	01-Sep-10
TU187	03-E16-00-1H	162	C20	ES-325	01-Sep-10
TU187	03-E16-00-1H	163	C20	ES-325	01-Sep-10
TU187	03-E16-00-1H	164	C20	ES-325	01-Sep-10
TU187	03-E16-00-1H	165	C20	ES-325	01-Sep-10
TU187	03-E16-00-1H	189	E27	ES-336	28-Sep-10
TU187	03-E16-00-1H	190	E27	ES-336	28-Sep-10
TU187	03-E16-00-1H	191	E27	ES-336	28-Sep-10
TU187	03-E16-00-1H	192	E27	ES-336	28-Sep-10
TU187	03-E16-00-1H	193	E27	ES-336	28-Sep-10
TU187	03-E16-00-1H	194	E27	ES-336	28-Sep-10
TU187	03-E16-00-1H	195	E27	ES-336	28-Sep-10
TU187	03-E16-00-1H	196	E27	ES-336	28-Sep-10
TU187	03-E16-00-1H	197	E27	ES-336	28-Sep-10
TU187	03-E16-00-1H	198	E27	ES-336	28-Sep-10
TU187	03-E16-00-1H	199	E27	ES-336	28-Sep-10
TU187	03-E16-00-1H	200	E27	ES-336	28-Sep-10
TU187	03-E16-00-1H	201	E29	ES-337	28-Sep-10
TU187	03-E16-00-1H	202	E29	ES-337	28-Sep-10
TU187	03-E16-00-1H	203	E29	ES-337	28-Sep-10
TU187	03-E16-00-1H	204	E29	ES-337	28-Sep-10
TU187	03-E16-00-1H	205	E29	ES-337	28-Sep-10

TABLE 3-3

PARCEL UC3 EXCAVATED SOIL SUMMARY

Trench Survey Unit Identification No.	Trench Segment	Truck Load No.	RSY[a] Screening Pad	Assigned ES Identification No.	Date Excavated
TU187	03-E16-00-3E	03	C20	ES-325	02-Sep-10
TU187	03-E16-00-3E	04	C20	ES-325	02-Sep-10
TU187	03-E16-00-3E	05	C20	ES-325	02-Sep-10
TU187	03-E16-00-3E	06	C20	ES-325	02-Sep-10
TU187	03-E16-00-3E	07	C01	ES-326	02-Sep-10
TU187	03-E16-00-3E	08	C01	ES-326	02-Sep-10
TU187	03-E16-00-3E	09	C01	ES-326	02-Sep-10
TU187	03-E16-00-3E	10	C01	ES-326	02-Sep-10
TU187	03-E16-00-3E	11	C01	ES-326	02-Sep-10
TU187	03-E16-00-3E	12	C01	ES-326	02-Sep-10
TU187	03-E16-00-3E	13	C01	ES-326	02-Sep-10
TU187	03-E16-00-3E	14	C01	ES-326	02-Sep-10
TU187	03-E16-00-3E	15	C01	ES-326	02-Sep-10
TU187	03-E16-00-3E	16	C01	ES-326	02-Sep-10
TU187	03-E16-00-3E	17	C01	ES-326	02-Sep-10
TU187	03-E16-00-3E	18	C01	ES-326	02-Sep-10
TU187	03-E16-00-3E	19	C02	ES-327	02-Sep-10
TU187	03-E16-00-3E	20	C02	ES-327	02-Sep-10
TU187	03-E16-00-3E	21	C02	ES-327	02-Sep-10
TU187	03-E16-00-3E	22	C02	ES-327	02-Sep-10
TU187	03-E16-00-3E	23	E27	ES-336	28-Sep-10
TU187	03-E16-00-3E	24	E27	ES-336	28-Sep-10
TU187	03-E16-00-3E	25	E27	ES-336	28-Sep-10
TU187	03-E16-00-3E	26	E27	ES-336	28-Sep-10
TU187	03-E16-00-3E	27	E27	ES-336	28-Sep-10
TU187	03-E16-00-3E	28	E27	ES-336	28-Sep-10
TU187	03-E16-00-3E	29	E27	ES-336	28-Sep-10
TU187	03-E16-00-3E	30	E27	ES-336	28-Sep-10
TU187	03-E16-00-3E	31	E29	ES-337	28-Sep-10
TU187	03-E16-00-3E	32	E29	ES-337	28-Sep-10
TU187	03-E16-00-3E	33	E29	ES-337	28-Sep-10
TU187	03-E16-00-3E	34	E29	ES-337	28-Sep-10
TU187	03-E16-00-3E	35	E29	ES-337	28-Sep-10
TU187	03-E16-00-3E	36	E29	ES-337	28-Sep-10
TU187	03-E16-00-3J	03	C02	ES-327	08-Sep-10
TU187	03-E16-00-3J	04	C02	ES-327	08-Sep-10
TU187	03-E16-00-3J	05	C02	ES-327	08-Sep-10
TU187	03-E16-00-3L	06	D04	ES-334	27-Sep-10

TABLE 3-3

PARCEL UC3 EXCAVATED SOIL SUMMARY

Trench Survey Unit Identification No.	Trench Segment	Truck Load No.	RSY[a] Screening Pad	Assigned ES Identification No.	Date Excavated
TU187	03-E16-00-3L	07	D04	ES-334	27-Sep-10
TU187	03-E16-00-3L	08	D04	ES-334	27-Sep-10
TU187	03-E16-00-3L	09	D04	ES-334	27-Sep-10
TU187	03-E16-00-3L	10	D04	ES-334	27-Sep-10
TU187	03-E16-00-3L	11	D04	ES-334	28-Sep-10
TU187	03-E16-00-3L	12	D04	ES-334	28-Sep-10
TU187	03-E16-00-3L	13	D04	ES-334	28-Sep-10
TU187	03-E16-00-3L	14	D04	ES-334	28-Sep-10
TU187	03-E16-00-3L	15	D04	ES-334	28-Sep-10
TU187	03-E16-00-3L	16	D04	ES-334	28-Sep-10
TU187	03-E16-00-4A	01	D04	ES-334	28-Sep-10
TU188	03-E16-00-1H	255	E17	ES-342	01-Oct-10
TU188	03-E16-00-1H	256	E17	ES-342	01-Oct-10
TU188	03-E16-00-1H	257	E17	ES-342	01-Oct-10
TU188	03-E16-00-1H	258	E17	ES-342	01-Oct-10
TU188	03-E16-00-1H	259	E17	ES-342	01-Oct-10
TU188	03-E16-00-1H	260	E17	ES-342	01-Oct-10
TU188	03-E16-00-1H	261	E17	ES-342	01-Oct-10
TU188	03-E16-00-1H	262	E17	ES-342	01-Oct-10
TU188	03-E16-00-1H	263	E17	ES-342	01-Oct-10
TU188	03-E16-00-1H	264	E17	ES-342	01-Oct-10
TU188	03-E16-00-1H	265	E17	ES-342	01-Oct-10
TU188	03-E16-00-1H	266	E17	ES-342	01-Oct-10
TU188	03-E16-00-1H	267	E16	ES-343	04-Oct-10
TU188	03-E16-00-1H	268	E16	ES-343	04-Oct-10
TU188	03-E16-00-1H	269	E15	ES-344	04-Oct-10
TU188	03-E16-00-1H	270	E15	ES-344	04-Oct-10
TU188	03-E16-00-4E	01	E17	ES-342	01-Oct-10
TU188	03-E16-00-4E	02	E17	ES-342	01-Oct-10
TU188	03-E16-00-4E	03	E17	ES-342	01-Oct-10
TU188	03-E16-00-4E	04	E17	ES-342	01-Oct-10
TU188	03-E16-00-4E	05	E17	ES-342	01-Oct-10
TU188	03-E16-00-4E	06	E17	ES-342	01-Oct-10
TU188	03-E16-00-4E	07	E17	ES-342	01-Oct-10
TU188	03-E16-00-4E	08	E17	ES-342	01-Oct-10
TU188	03-E16-00-4E	09	E17	ES-342	01-Oct-10
TU188	03-E16-00-4E	10	E17	ES-342	01-Oct-10
TU188	03-E16-00-4E	11	E17	ES-342	01-Oct-10

TABLE 3-3

PARCEL UC3 EXCAVATED SOIL SUMMARY

Trench Survey Unit Identification No.	Trench Segment	Truck Load No.	RSY[a] Screening Pad	Assigned ES Identification No.	Date Excavated
TU188	03-E16-00-4E	12	E16	ES-343	01-Oct-10
TU188	03-E16-00-4E	13	E16	ES-343	01-Oct-10
TU188	03-E16-00-4E	14	E16	ES-343	04-Oct-10
TU188	03-E16-00-4E	15	E16	ES-343	04-Oct-10
TU188	03-E16-00-4E	16	E16	ES-343	04-Oct-10
TU188	03-E16-00-4E	17	E15	ES-344	04-Oct-10
TU188	03-E16-00-4F	01	E19	ES-340	30-Sep-10
TU188	03-E16-00-4F	02	E19	ES-340	30-Sep-10
TU188	03-E16-00-4G	01	C02	ES-327	09-Sep-10
TU188	03-E16-00-4G	02	C02	ES-327	09-Sep-10
TU188	03-E16-00-4G	03	C02	ES-327	09-Sep-10
TU188	03-E16-00-4G	04	D10	ES-328	09-Sep-10
TU188	03-E16-00-4G	05	D10	ES-328	09-Sep-10
TU188	03-E16-00-4G	06	D10	ES-328	09-Sep-10
TU188	03-E16-00-4G	07	D10	ES-328	09-Sep-10
TU188	03-E16-00-4G	08	D10	ES-328	09-Sep-10
TU188	03-E16-00-4G	09	D10	ES-328	09-Sep-10
TU188	03-E16-00-4G	10	D10	ES-328	09-Sep-10
TU188	03-E16-00-4G	11	D10	ES-328	09-Sep-10
TU188	03-E16-00-4G	12	D10	ES-328	10-Sep-10
TU188	03-E16-00-4G	13	D10	ES-328	10-Sep-10
TU188	03-E16-00-4G	14	D10	ES-328	10-Sep-10
TU188	03-E16-00-4G	15	D04	ES-334	16-Sep-10
TU188	03-E16-00-4G	16	D04	ES-334	16-Sep-10
TU188	03-E16-00-4G	17	D04	ES-334	16-Sep-10
TU188	03-E16-00-4G	18	D04	ES-334	16-Sep-10
TU188	03-E16-00-4G	19	D04	ES-334	16-Sep-10
TU188	03-E16-00-4G	20	D04	ES-334	16-Sep-10
TU188	03-E16-00-4G	21	E18	ES-341	01-Oct-10
TU188	03-E16-00-4G	22	E18	ES-341	01-Oct-10
TU188	03-E16-00-4G	23	E18	ES-341	01-Oct-10
TU188	03-E16-00-4G	24	E18	ES-341	01-Oct-10
TU188	03-E16-00-4G	25	E17	ES-342	01-Oct-10
TU188	03-E16-00-4G	26	E17	ES-342	01-Oct-10
TU188	03-E16-00-4N	01	E19	ES-340	30-Sep-10
TU188	03-E16-00-4N	02	E19	ES-340	30-Sep-10
TU188	03-E16-00-4O	01	E18	ES-341	30-Sep-10
TU188	03-E16-00-4O	02	E18	ES-341	30-Sep-10

TABLE 3-3

PARCEL UC3 EXCAVATED SOIL SUMMARY

Trench Survey Unit Identification No.	Trench Segment	Truck Load No.	RSY[a] Screening Pad	Assigned ES Identification No.	Date Excavated
TU188	03-E16-00-4O	03	E18	ES-341	01-Oct-10
TU188	03-E16-00-4O	04	E18	ES-341	01-Oct-10
TU188	03-E16-00-4O	05	E18	ES-341	01-Oct-10
TU188	03-E16-00-4P	02	C02	ES-327	09-Sep-10
TU188	03-E16-00-4P	03	D10	ES-328	09-Sep-10
TU188	03-E16-00-4P	04	D10	ES-328	09-Sep-10
TU188	03-E16-00-4P	05	D10	ES-328	09-Sep-10
TU188	03-E16-00-4P	06	D10	ES-328	09-Sep-10
TU188	03-E16-00-4P	07	D10	ES-328	09-Sep-10
TU188	03-E16-00-4P	08	D10	ES-328	09-Sep-10
TU188	03-E16-00-4P	09	D10	ES-328	09-Sep-10
TU188	03-E16-00-4P	10	D10	ES-328	09-Sep-10
TU188	03-E16-00-4P	11	D10	ES-328	09-Sep-10
TU188	03-E16-00-4P	12	D10	ES-328	09-Sep-10
TU188	03-E16-00-4P	13	D10	ES-328	10-Sep-10
TU188	03-E16-00-4P	14	D10	ES-328	10-Sep-10
TU188	03-E16-00-4P	15	D10	ES-328	10-Sep-10
TU188	03-E16-00-4P	16	D04	ES-334	16-Sep-10
TU188	03-E16-00-4P	17	D04	ES-334	16-Sep-10
TU188	03-E16-00-4P	18	E18	ES-341	30-Sep-10
TU188	03-E16-04-4G	01	E05	ES-449	10-Sep-10
TU189	03-E16-00-1H	206	E29	ES-337	28-Sep-10
TU189	03-E16-00-1H	207	E29	ES-337	29-Sep-10
TU189	03-E16-00-1H	208	E29	ES-337	29-Sep-10
TU189	03-E16-00-1H	209	E29	ES-337	29-Sep-10
TU189	03-E16-00-1H	210	E29	ES-337	29-Sep-10
TU189	03-E16-00-1H	211	E29	ES-337	29-Sep-10
TU189	03-E16-00-1H	212	E29	ES-337	29-Sep-10
TU189	03-E16-00-1H	213	E26	ES-338	29-Sep-10
TU189	03-E16-00-1H	214	E26	ES-338	29-Sep-10
TU189	03-E16-00-1H	215	E26	ES-338	29-Sep-10
TU189	03-E16-00-1H	216	E26	ES-338	29-Sep-10
TU189	03-E16-00-1H	217	E26	ES-338	29-Sep-10
TU189	03-E16-00-1H	218	E26	ES-338	29-Sep-10
TU189	03-E16-00-1H	219	E26	ES-338	29-Sep-10
TU189	03-E16-00-1H	220	E26	ES-338	29-Sep-10
TU189	03-E16-00-1H	221	E26	ES-338	29-Sep-10
TU189	03-E16-00-1H	222	E26	ES-338	29-Sep-10

TABLE 3-3

PARCEL UC3 EXCAVATED SOIL SUMMARY

Trench Survey Unit Identification No.	Trench Segment	Truck Load No.	RSY[a] Screening Pad	Assigned ES Identification No.	Date Excavated
TU189	03-E16-00-1H	223	E26	ES-338	29-Sep-10
TU189	03-E16-00-1H	224	E26	ES-338	29-Sep-10
TU189	03-E16-00-1H	225	E20	ES-339	29-Sep-10
TU189	03-E16-00-1H	226	E20	ES-339	29-Sep-10
TU189	03-E16-00-1H	227	E20	ES-339	29-Sep-10
TU189	03-E16-00-3E	37	E29	ES-337	28-Sep-10
TU189	03-E16-00-3E	38	E29	ES-337	28-Sep-10
TU189	03-E16-00-3E	39	E29	ES-337	29-Sep-10
TU189	03-E16-00-3E	40	E29	ES-337	29-Sep-10
TU189	03-E16-00-3E	41	E29	ES-337	29-Sep-10
TU189	03-E16-00-3E	42	E29	ES-337	29-Sep-10
TU189	03-E16-00-4A	02	D04	ES-334	28-Sep-10
TU189	03-E16-00-4A	03	D04	ES-334	28-Sep-10
TU189	03-E16-00-4A	04	E27	ES-336	28-Sep-10
TU189	03-E16-00-4A	05	E27	ES-336	28-Sep-10
TU189	03-E16-00-4A	06	E27	ES-336	28-Sep-10
TU189	03-E16-00-4A	07	E27	ES-336	28-Sep-10
TU189	03-E16-00-4A	08	E27	ES-336	28-Sep-10
TU189	03-E16-00-4A	09	E26	ES-338	29-Sep-10
TU189	03-E16-00-4A	10	E26	ES-338	29-Sep-10
TU189	03-E16-00-4A	11	E26	ES-338	29-Sep-10
TU189	03-E16-00-4A	12	E26	ES-338	29-Sep-10
TU189	03-E16-00-4A	13	E26	ES-338	29-Sep-10
TU189	03-E16-00-4A	14	E26	ES-338	29-Sep-10
TU189	03-E16-00-4A	15	E20	ES-339	29-Sep-10
TU189	03-E16-00-4A	16	E20	ES-339	29-Sep-10
TU189	03-E16-00-4A	17	E20	ES-339	29-Sep-10
TU189	03-E16-00-4A	18	E20	ES-339	29-Sep-10
TU189	03-E16-00-4A	19	E20	ES-339	29-Sep-10
TU189	03-E16-00-4A	20	E20	ES-339	29-Sep-10
TU189	03-E16-00-4A	21	E20	ES-339	30-Sep-10
TU189	03-E16-00-4A	22	E20	ES-339	30-Sep-10
TU189	03-E16-00-4A	23	E20	ES-339	30-Sep-10
TU189	03-E16-00-4A	24	E20	ES-339	30-Sep-10
TU189	03-E16-00-4A	25	E20	ES-339	30-Sep-10
TU189	03-E16-00-4A	26	E20	ES-339	30-Sep-10
TU189	03-E16-00-4A	27	E20	ES-339	30-Sep-10
TU189	03-E16-00-4A	28	E19	ES-340	30-Sep-10

TABLE 3-3

PARCEL UC3 EXCAVATED SOIL SUMMARY

Trench Survey Unit Identification No.	Trench Segment	Truck Load No.	RSY[a] Screening Pad	Assigned ES Identification No.	Date Excavated
TU189	03-E16-00-4A	29	E19	ES-340	30-Sep-10
TU189	03-E16-00-4A	30	E19	ES-340	30-Sep-10
TU189	03-E16-00-4A	31	E19	ES-340	30-Sep-10
TU189	03-E16-00-4A	32	E19	ES-340	30-Sep-10
TU189	03-E16-00-4B	01	E29	ES-337	29-Sep-10
TU189	03-E16-00-4B	02	E26	ES-338	29-Sep-10
TU189	03-E16-00-4B	03	E26	ES-338	29-Sep-10
TU189	03-E16-00-4D	01	E19	ES-340	30-Sep-10
TU189	03-E16-00-4D	02	E19	ES-340	30-Sep-10
TU189	03-E16-00-4D	03	E19	ES-340	30-Sep-10
TU189	03-E16-00-4D	04	E19	ES-340	30-Sep-10
TU189	03-E16-00-4D	05	E19	ES-340	30-Sep-10
TU189	03-E16-00-4D	06	E18	ES-341	30-Sep-10
TU189	03-E16-00-4D	07	E18	ES-341	30-Sep-10
TU189	03-E16-00-4D	08	E18	ES-341	30-Sep-10
TU190	03-E16-00-1H	228	E20	ES-339	29-Sep-10
TU190	03-E16-00-1H	229	E20	ES-339	29-Sep-10
TU190	03-E16-00-1H	230	E20	ES-339	29-Sep-10
TU190	03-E16-00-1H	231	E20	ES-339	29-Sep-10
TU190	03-E16-00-1H	232	E20	ES-339	30-Sep-10
TU190	03-E16-00-1H	233	E20	ES-339	30-Sep-10
TU190	03-E16-00-1H	234	E20	ES-339	30-Sep-10
TU190	03-E16-00-1H	235	E20	ES-339	30-Sep-10
TU190	03-E16-00-1H	236	E20	ES-339	30-Sep-10
TU190	03-E16-00-1H	237	E19	ES-340	30-Sep-10
TU190	03-E16-00-1H	238	E19	ES-340	30-Sep-10
TU190	03-E16-00-1H	239	E19	ES-340	30-Sep-10
TU190	03-E16-00-1H	240	E19	ES-340	30-Sep-10
TU190	03-E16-00-1H	241	E19	ES-340	30-Sep-10
TU190	03-E16-00-1H	242	E19	ES-340	30-Sep-10
TU190	03-E16-00-1H	243	E19	ES-340	30-Sep-10
TU190	03-E16-00-1H	244	E19	ES-340	30-Sep-10
TU190	03-E16-00-1H	245	E19	ES-340	30-Sep-10
TU190	03-E16-00-1H	246	E19	ES-340	30-Sep-10
TU190	03-E16-00-1H	247	E19	ES-340	30-Sep-10
TU190	03-E16-00-1H	248	E18	ES-341	30-Sep-10
TU190	03-E16-00-1H	249	E18	ES-341	30-Sep-10
TU190	03-E16-00-1H	250	E18	ES-341	30-Sep-10

TABLE 3-3

PARCEL UC3 EXCAVATED SOIL SUMMARY

Trench Survey Unit Identification No.	Trench Segment	Truck Load No.	RSY[a] Screening Pad	Assigned ES Identification No.	Date Excavated
TU190	03-E16-00-1H	251	E18	ES-341	30-Sep-10
TU190	03-E16-00-1H	252	E18	ES-341	30-Sep-10
TU190	03-E16-00-1H	253	E18	ES-341	30-Sep-10
TU190	03-E16-00-1H	254	E18	ES-341	30-Sep-10
TU190	03-E16-00-3N	49	D02	ES-332	14-Sep-10
TU190	03-E16-00-3N	50	D02	ES-332	14-Sep-10
TU190	03-E16-00-3N	51	D02	ES-332	14-Sep-10
TU190	03-E16-00-3N	52	D03	ES-333	14-Sep-10
TU190	03-E16-00-3N	53	D03	ES-333	14-Sep-10
TU190	03-E16-00-3N	54	D03	ES-333	14-Sep-10
TU190	03-E16-00-4B	04	E26	ES-338	29-Sep-10
TU190	03-E16-00-4B	05	E26	ES-338	29-Sep-10
TU190	03-E16-00-4B	06	E26	ES-338	29-Sep-10
TU190	03-E16-00-4B	07	E26	ES-338	29-Sep-10
TU190	03-E16-00-4B	08	E26	ES-338	29-Sep-10
TU190	03-E16-00-4D	09	E18	ES-341	30-Sep-10
TU190	03-E16-00-4D	10	E18	ES-341	30-Sep-10
TU190	03-E16-00-4D	11	E18	ES-341	30-Sep-10
TU190	03-E16-00-4D	12	E18	ES-341	30-Sep-10
TU190	03-E16-00-4D	13	E18	ES-341	30-Sep-10

Notes:

[a] The "C" designation indicates the soil was processed in RSY2; the "D" designation indicates the soil was processed in RSY3; the "E" designation indicates the soil was processed in RSY4.

Abbreviations and Acronyms:

ES – Excavated Soil Survey Unit
RSY – Radiological Screening Yard
TU – Trench Survey Unit

TABLE 3-4

PARCEL UC3 RADIOLOGICAL SCREENING YARD EXCAVATED SOIL PROCESSING SUMMARY

ES Survey Unit ID	Screening Pad Number[a]	Associated IR Site	Date Gamma Scan Performed	Total Soil Samples Collected	Identified ROC	Elevated Sample Results (pCi/g)	Estimated Soil Volume Remediated (cy)	ES Survey Unit Disposition
ES-270	C32	56	04-Jun-10	20	NA	NA	0	Non-LLRW[b]
ES-271	C12	00	07-Apr-10	71	Ra-226	1.7800 to 2.6227	27	Backfilled[c]
ES-272	C21	00	09-Apr-10	46	Ra-226	1.8639 to 2.4842	18	Backfilled[c]
ES-276	C31	00	19-Apr-10	21	NA	NA	0	Backfilled[c]
ES-278	C30	00	30-Apr-10	36	Cs-137 Ra-226	0.11942 to 0.14983 1.5265 to 2.3502	200	LLRW[d]
ES-279	C29	00	24-May-10	36	Cs-137 Ra-226	0.13556 to 0.16916 1.5157 to 3.2976	200	Non-LLRW[b]
ES-281	C10	00	23-Jun-10	86	Cs-137 Ra-226	0.11923 1.4898 to 1.9504	18	Backfilled[c]
ES-284	C09	00	24-Jun-10	94	Cs-137 Ra-226	0.11849 to 0.16759 1.4907 to 2.2774	92	Backfilled[c]
ES-285	C11	00	07-Jul-10	72	Cs-137 Ra-226	0.12011 1.5902 to 1.9331	19	Backfilled[c]
ES-286	C21	00	26-Jul-10	84	Ra-226	1.5246 to 1.8952	20.5	Non-LLRW[b]
ES-287	D10	00	26-Jul-10	53	Ra-226	1.5723	2.5	Backfilled[c]
ES-288	D09	00	09-Aug-10	36	NA	NA	0	Backfilled[c]
ES-290	D04	56	29-Jul-10	20	NA	NA	0	Non-LLRW[b]
ES-291	D03	56	06-Aug-10	24	Cs-137	0.11349	3	Non-LLRW[b]
ES-292	D02	56	06-Aug-10	20	NA	NA	0	Non-LLRW[b]
ES-293	D08	00	09-Aug-10	34	NA	NA	0	Backfilled[c]
ES-294	D01	74	06-Aug-10	54	Ra-226	1.5049	2	Backfilled[c]

TABLE 3-4

PARCEL UC3 RADIOLOGICAL SCREENING YARD EXCAVATED SOIL PROCESSING SUMMARY

ES Survey Unit ID	Screening Pad Number[a]	Associated IR Site	Date Gamma Scan Performed	Total Soil Samples Collected	Identified ROC	Elevated Sample Results (pCi/g)	Estimated Soil Volume Remediated (cy)	ES Survey Unit Disposition
ES-295	D06	74	09-Sep-10	20	NA	NA	0	Backfilled[c]
ES-296	D07	00	10-Aug-10	36	NA	NA	0	Backfilled[c]
ES-297	C20	00	10-Aug-10	36	NA	NA	0	Backfilled[c]
ES-298	C19	00	12-Aug-10	58	Cs-137	0.11508	2	Backfilled[c]
ES-299	C18	00	12-Aug-10	36	NA	NA	0	Backfilled[c]
ES-300	C17	00	12-Aug-10	32	NA	NA	0	Backfilled[c]
ES-301	C16	00	13-Aug-10	83	Ra-226	1.4908 to 1.7591	18	Backfilled[c]
ES-302	C15	00	13-Aug-10	83	Ra-226	1.5278 to 1.7658	12.5	Backfilled[c]
ES-303	C14	00	16-Aug-10	36	NA	NA	0	Backfilled[c]
ES-304	C13	00	17-Aug-10	61	Ra-226	1.7451 to 1.8353	6	Backfilled[c]
ES-305	C22	00	17-Aug-10	68	Cs-137 Ra-226	0.11390 to 0.11807 1.5808 to 1.7448	10	Backfilled[c]
ES-306	C23	00	18-Aug-10	79	Ra-226	1.5562 to 1.5808	9.5	Non-LLRW[b]
ES-307	C24	00	18-Aug-10	54	Ra-226	1.9608	2	Backfilled[c]
ES-308	C25	00	19-Aug-10	58	Ra-226	1.5187	1	Backfilled[c]
ES-309	C26	00	19-Aug-10	58	Ra-226	1.7424 to 1.8429	7	Backfilled[c]
ES-310	C27	00	20-Aug-10	36	NA	NA	0	Backfilled[c]
ES-311	C28	00	23-Aug-10	58	Ra-226	1.8950	1.5	Backfilled[c]
ES-312	C29	00	23-Aug-10	56	Ra-226	1.7799	1	Backfilled[c]
ES-313	C30	00	26-Aug-10	32	NA	NA	0	Backfilled[c]
ES-314	C31	00	27-Aug-10	58	Ra-226	1.4851	1	Backfilled[c]

TABLE 3-4

PARCEL UC3 RADIOLOGICAL SCREENING YARD EXCAVATED SOIL PROCESSING SUMMARY

ES Survey Unit ID	Screening Pad Number[a]	Associated IR Site	Date Gamma Scan Performed	Total Soil Samples Collected	Identified ROC	Elevated Sample Results (pCi/g)	Estimated Soil Volume Remediated (cy)	ES Survey Unit Disposition
ES-315	C32	00	27-Aug-10	34	NA	NA	0	Backfilled[c]
ES-316	C33	00	31-Aug-10	27	NA	NA	0	Backfilled[c]
ES-317	C34	00	31-Aug-10	23	NA	NA	0	Backfilled[c]
ES-318	C35	00	31-Aug-10	20	NA	NA	0	Backfilled[c]
ES-319	C36	00	02-Sep-10	36	NA	NA	0	Backfilled[c]
ES-320	C37	00	02-Sep-10	36	NA	NA	0	Backfilled[c]
ES-321	C10	00	08-Sep-10	21	NA	NA	0	Backfilled[c]
ES-322	C11	00	08-Sep-10	20	NA	NA	0	Backfilled[c]
ES-323	C12	00	07-Sep-10	24	NA	NA	0	Backfilled[c]
ES-324	C09	00	07-Sep-10	20	NA	NA	0	Backfilled[c]
ES-325	C20	00	10-Sep-10	20	NA	NA	0	Backfilled[c]
ES-326	C01	00	15-Sep-10	20	NA	NA	0	Backfilled[c]
ES-327	C02	00	15-Sep-10	56	Ra-226	1.5889	3	Backfilled[c]
ES-328	D10	00	16-Sep-10	78	Ra-226	1.4920 to 1.8707	28	Non-LLRW[b]
ES-329	D09	00	16-Sep-10	44	Ra-226	1.5218	3	Backfilled[c]
ES-330	D08	00	17-Sep-10	30	NA	NA	0	LLRW[d]
ES-332	D02	00	22-Sep-10	69	Ra-226	1.5277 to 1.5830	5	Released[e]
ES-333	D03	00	22-Sep-10	23	NA	NA	0	Released[e]
ES-334	D04	00	08-Oct-10	83	Ra-226	1.4860 to 2.2370	20	Backfilled[c]
ES-336	E27	00	11-Oct-10	56	Ra-226	1.5460 to 2.8920	45	Released[e]
ES-337	E29	00	14-Oct-10	36	NA	NA	0	Backfilled[c]

TABLE 3-4

PARCEL UC3 RADIOLOGICAL SCREENING YARD EXCAVATED SOIL PROCESSING SUMMARY

ES Survey Unit ID	Screening Pad Number[a]	Associated IR Site	Date Gamma Scan Performed	Total Soil Samples Collected	Identified ROC	Elevated Sample Results (pCi/g)	Estimated Soil Volume Remediated (cy)	ES Survey Unit Disposition
ES-338	E26	00	15-Oct-10	36	NA	NA	0	Released[e]
ES-339	E20	00	15-Oct-10	47	Ra-226	1.6940 to 2.3800	11	Released[e]
ES-340	E19	00	26-Oct-10	20	NA	NA	0	Released[e]
ES-341	E18	00	18-Oct-10	22	NA	NA	0	Released[e]
ES-342	E17	00	18-Oct-10	24	NA	NA	0	Released[e]
ES-343	E16B	00	26-Oct-10	19	NA	NA	0	Released[e]
ES-344	E16A	00	26-Oct-10	20	NA	NA	0	Non-LLRW[b]
ES-449	E05	04	NA	28	NA	NA	0	Non-LLRW[b]

Notes:

[a] The "C" designation indicates the soil was processed in RSY2; the "D" designation indicates the soil was processed in RSY3; the "E" designation indicates the soil was processed in RSY4.

[b] Radiologically surveyed and released excavated soil disposed of off-site by the DON non-LLRW waste contractor with the concurrence of the RASO.

[c] Radiologically surveyed and released and backfilled into one or more trench survey units.

[d] Based on contaminated survey and sample result data, entire volume of excavated soil on screening pad was placed in LLRW bins for disposal at either the U.S. Ecology facility in Idaho or the Energy Solutions facility in Clive, Utah.

[e] Radiologically surveyed and released with the concurrence of the RASO; staged in stockpile area pending use as HPNS backfill material.

Abbreviations and Acronyms:

Cs-137 – cesium-137
cy – cubic yards
DON – Department of the Navy
ES – Excavated Soil Survey Unit
HPNS – Hunters Point Naval Shipyard
IR – Installation Restoration
LLRW – low-level radioactive waste
NA – not applicable
Non-LLRW – non-low-level radioactive waste
pCi/g – picocuries per gram
Ra-226 – radium-226
RASO – Radiological Affairs Support Office
ROC – radionuclide of concern
RSY2 – Radiological Screening Yard 2
RSY3 – Radiological Screening Yard 3
RSY4 – Radiological Screening Yard 4

TABLE 3-5

PARCEL UC3 EXCAVATED PIPE AND MANHOLE RADIOLOGICAL SURVEYS AND DISPOSITION SUMMARY

Trench Segment	Section No.	Date Excavated	Description			Radiological Survey				Disposition		
			Length (feet)	Diameter (inches)	Material Type	Date Performed	Survey Report No.	Survey Results	Concur-Swipe	Date Transferred	Waste Type	LLRW Bin No.
03-E16-00-1W	MH637	14-May-10	NA	NA	Concrete	NA	NA	NA	NA	14-May-10	NA[a]	GFLU001127G12 GFLU001163G11
03-E16-00-1X	MH509	17-May-10	NA	NA	Concrete	NA	NA	NA	NA	17-May-10	NA[a]	GFLU001127G12
03-E16-00-1Y	MH508	17-May-10	NA	NA	Concrete	NA	NA	NA	NA	17-May-10	NA[a]	GFLU001163G11 GFLU001183G12
03-E16-00-1J	MH510	10-Aug-10	NA	NA	Brick	NA	NA	NA	NA	13-Aug-10	NA[a]	BKRU025997G12
03-E16-74-3C	MH528	04-Aug-10	NA	NA	Concrete	NA	NA	NA	NA	4-Aug-10	NA[a]	GFLU001233G4
03-E16-74-3J	MH638	04-Aug-10	NA	NA	Concrete	NA	NA	NA	NA	4-Aug-10	NA[a]	DB1185D3
03-E16-00-8M	02	20-Jul-10	18	16	DIP	26-Aug-10	HPS-PEPIPE-082610-009	Released[b]	31-Aug-10	31-Aug-10	Non-LLRW	NA[c]
03-E16-00-8M	03	20-Jul-10	18	16	DIP	26-Aug-10	HPS-PEPIPE-082610-009	Released[b]	31-Aug-10	31-Aug-10	Non-LLRW	NA[c]
03-E16-00-8M	04	12-Aug-10	18	16	DIP	26-Aug-10	HPS-PEPIPE-082610-009	Released[b]	31-Aug-10	31-Aug-10	Non-LLRW	NA[c]
03-E16-00-8M	05	12-Aug-10	18	16	DIP	26-Aug-10	HPS-PEPIPE-082610-009	Released[b]	31-Aug-10	31-Aug-10	Non-LLRW	NA[c]
03-E16-00-8M	06	12-Aug-10	18	16	DIP	26-Aug-10	HPS-PEPIPE-082610-009	Released[b]	31-Aug-10	31-Aug-10	Non-LLRW	NA[c]
03-E16-00-8M	07	12-Aug-10	18	16	DIP	26-Aug-10	HPS-PEPIPE-082610-009	Released[b]	31-Aug-10	31-Aug-10	Non-LLRW	NA[c]
03-E16-00-8M	08	12-Aug-10	18	16	DIP	26-Aug-10	HPS-PEPIPE-082610-009	Released[b]	31-Aug-10	31-Aug-10	Non-LLRW	NA[c]
03-E16-00-8M	09	12-Aug-10	18	16	DIP	26-Aug-10	HPS-PEPIPE-082610-009	Released[b]	31-Aug-10	31-Aug-10	Non-LLRW	NA[c]
03-E16-00-8M	10	12-Aug-10	18	16	DIP	26-Aug-10	HPS-PEPIPE-082610-009	Released[b]	31-Aug-10	31-Aug-10	Non-LLRW	NA[c]
03-E16-00-8M	11	12-Aug-10	18	16	DIP	26-Aug-10	HPS-PEPIPE-082610-009	Released[b]	31-Aug-10	31-Aug-10	Non-LLRW	NA[c]
03-E16-00-8M	12	12-Aug-10	18	16	DIP	26-Aug-10	HPS-PEPIPE-082610-009	Released[b]	31-Aug-10	31-Aug-10	Non-LLRW	NA[c]
03-E16-00-8M	13	12-Aug-10	18	16	DIP	26-Aug-10	HPS-PEPIPE-082610-009	Released[b]	31-Aug-10	31-Aug-10	Non-LLRW	NA[c]
03-E16-00-8M	14	13-Aug-10	18	16	DIP	26-Aug-10	HPS-PEPIPE-082610-009	Released[b]	31-Aug-10	31-Aug-10	Non-LLRW	NA[c]
03-E16-00-8M	15	13-Aug-10	18	16	DIP	26-Aug-10	HPS-PEPIPE-082610-009	Released[b]	31-Aug-10	31-Aug-10	Non-LLRW	NA[c]
03-E16-00-8M	16	13-Aug-10	18	16	DIP	26-Aug-10	HPS-PEPIPE-082610-009	Released[b]	31-Aug-10	31-Aug-10	Non-LLRW	NA[c]
03-E16-00-8M	17	13-Aug-10	18	16	DIP	26-Aug-10	HPS-PEPIPE-082610-009	Released[b]	31-Aug-10	31-Aug-10	Non-LLRW	NA[c]
03-E16-00-8M	18	13-Aug-10	18	16	DIP	27-Aug-10	HPS-PEPIPE-082710-010	Released[b]	31-Aug-10	31-Aug-10	Non-LLRW	NA[c]
03-E16-00-8M	19	13-Aug-10	18	16	DIP	27-Aug-10	HPS-PEPIPE-082710-010	Released[b]	31-Aug-10	31-Aug-10	Non-LLRW	NA[c]
03-E16-00-8M	20	13-Aug-10	18	16	DIP	27-Aug-10	HPS-PEPIPE-082710-010	Released[b]	31-Aug-10	31-Aug-10	Non-LLRW	NA[c]
03-E16-00-8M	21	13-Aug-10	18	16	DIP	27-Aug-10	HPS-PEPIPE-082710-010	Released[b]	31-Aug-10	31-Aug-10	Non-LLRW	NA[c]
03-E16-00-8M	22	16-Aug-10	18	16	DIP	27-Aug-10	HPS-PEPIPE-082710-010	Released[b]	31-Aug-10	31-Aug-10	Non-LLRW	NA[c]
03-E16-00-8M	23	16-Aug-10	18	16	DIP	27-Aug-10	HPS-PEPIPE-082710-010	Released[b]	31-Aug-10	31-Aug-10	Non-LLRW	NA[c]
03-E16-00-8M	24	16-Aug-10	18	16	DIP	27-Aug-10	HPS-PEPIPE-082710-010	Released[b]	31-Aug-10	31-Aug-10	Non-LLRW	NA[c]
03-E16-00-8M	25	16-Aug-10	18	16	DIP	27-Aug-10	HPS-PEPIPE-082710-010	Released[b]	31-Aug-10	31-Aug-10	Non-LLRW	NA[c]

TABLE 3-5

PARCEL UC3 EXCAVATED PIPE AND MANHOLE RADIOLOGICAL SURVEYS AND DISPOSITION SUMMARY

Trench Segment	Section No.	Date Excavated	Description			Radiological Survey				Disposition		
			Length (feet)	Diameter (inches)	Material Type	Date Performed	Survey Report No.	Survey Results	Concur-Swipe	Date Transferred	Waste Type	LLRW Bin No.
03-E16-00-8M	26	16-Aug-10	18	16	DIP	27-Aug-10	HPS-PEPIPE-082710-010	Released[b]	31-Aug-10	31-Aug-10	Non-LLRW	NA[c]
03-E16-00-8M	27	16-Aug-10	18	16	DIP	27-Aug-10	HPS-PEPIPE-082710-010	Released[b]	31-Aug-10	31-Aug-10	Non-LLRW	NA[c]
03-E16-00-8M	28	16-Aug-10	18	16	DIP	27-Aug-10	HPS-PEPIPE-082710-010	Released[b]	31-Aug-10	31-Aug-10	Non-LLRW	NA[c]
03-E16-00-8M	29	17-Aug-10	18	16	DIP	27-Aug-10	HPS-PEPIPE-082710-010	Released[b]	31-Aug-10	31-Aug-10	Non-LLRW	NA[c]
03-E16-00-8M	30	17-Aug-10	18	16	DIP	27-Aug-10	HPS-PEPIPE-082710-010	Released[b]	31-Aug-10	31-Aug-10	Non-LLRW	NA[c]
03-E16-00-8M	31	14-Aug-10	18	16	DIP	31-Aug-10	HPS-PEPIPE-083110-011	Released[b]	1-Sep-10	1-Sep-10	Non-LLRW	NA[c]
03-E16-00-8M	32	14-Aug-10	18	16	DIP	31-Aug-10	HPS-PEPIPE-083110-011	Released[b]	1-Sep-10	1-Sep-10	Non-LLRW	NA[c]
03-E16-00-8M	33	14-Aug-10	18	16	DIP	31-Aug-10	HPS-PEPIPE-083110-011	Released[b]	1-Sep-10	1-Sep-10	Non-LLRW	NA[c]
03-E16-00-8M	34	14-Aug-10	18	16	DIP	31-Aug-10	HPS-PEPIPE-083110-011	Released[b]	1-Sep-10	1-Sep-10	Non-LLRW	NA[c]
03-E16-00-8M	35	14-Aug-10	18	16	DIP	31-Aug-10	HPS-PEPIPE-083110-011	Released[b]	1-Sep-10	1-Sep-10	Non-LLRW	NA[c]
03-E16-00-8M	36	14-Aug-10	18	16	DIP	31-Aug-10	HPS-PEPIPE-083110-011	Released[b]	1-Sep-10	1-Sep-10	Non-LLRW	NA[c]
03-E16-00-8M	37	14-Aug-10	18	16	DIP	31-Aug-10	HPS-PEPIPE-083110-011	Released[b]	1-Sep-10	1-Sep-10	Non-LLRW	NA[c]
03-E16-00-8M	38	14-Aug-10	18	16	DIP	31-Aug-10	HPS-PEPIPE-083110-011	Released[b]	1-Sep-10	1-Sep-10	Non-LLRW	NA[c]
03-E16-00-8M	39	14-Aug-10	18	16	DIP	31-Aug-10	HPS-PEPIPE-083110-011	Released[b]	1-Sep-10	1-Sep-10	Non-LLRW	NA[c]
03-E16-00-8M	40	14-Aug-10	18	16	DIP	31-Aug-10	HPS-PEPIPE-083110-011	Released[b]	1-Sep-10	1-Sep-10	Non-LLRW	NA[c]
03-E16-00-1A	MH501	13-Aug-10	NA	NA	Concrete	NA	NA	NA	NA	16-Aug-10	NA[a]	BKRU026470G13 DB1142D2
03-E16-00-1C	01	17-Aug-10	9	33	Concrete	31-Aug-10	HPS-PEPIPE-083110-012	Released[b]	2-Sep-10	7-Sep-10	Non-LLRW	NA[d]
03-E16-00-1C	02	17-Aug-10	9	33	Concrete	31-Aug-10	HPS-PEPIPE-083110-012	Released[b]	2-Sep-10	7-Sep-10	Non-LLRW	NA[d]
03-E16-00-1C	03	17-Aug-10	9	33	Concrete	31-Aug-10	HPS-PEPIPE-083110-012	Released[b]	2-Sep-10	7-Sep-10	Non-LLRW	NA[d]
03-E16-00-1D	03	16-Aug-10	3	16	Concrete	31-Aug-10	HPS-PEPIPE-083110-012	Released[b]	2-Sep-10	7-Sep-10	Non-LLRW	NA[d]
03-E16-00-1D	04	16-Aug-10	3	16	Concrete	31-Aug-10	HPS-PEPIPE-083110-012	Released[b]	2-Sep-10	7-Sep-10	Non-LLRW	NA[d]
03-E16-00-1D	05	16-Aug-10	3	16	Concrete	31-Aug-10	HPS-PEPIPE-083110-012	Released[b]	2-Sep-10	7-Sep-10	Non-LLRW	NA[d]
03-E16-00-1D	06	16-Aug-10	3	16	Concrete	31-Aug-10	HPS-PEPIPE-083110-012	Released[b]	2-Sep-10	7-Sep-10	Non-LLRW	NA[d]
03-E16-00-1D	MH502	16-Aug-10	NA	NA	Concrete	16-Aug-10	HPS-PEPIPE-081610-005	Released[b]	31-Aug-10	14-Sep-10	Non-LLRW	NA[d]
03-E16-00-8M	41	20-Aug-10	18	16	DIP	31-Aug-10	HPS-PEPIPE-083110-013	Released[b]	2-Sep-10	2-Sep-10	Non-LLRW	NA[c]
03-E16-00-8M	42	20-Aug-10	18	16	DIP	31-Aug-10	HPS-PEPIPE-083110-013	Released[b]	2-Sep-10	2-Sep-10	Non-LLRW	NA[c]
03-E16-00-8M	43	20-Aug-10	18	16	DIP	31-Aug-10	HPS-PEPIPE-083110-013	Released[b]	2-Sep-10	2-Sep-10	Non-LLRW	NA[c]
03-E16-00-8M	44	20-Aug-10	18	16	DIP	31-Aug-10	HPS-PEPIPE-083110-013	Released[b]	2-Sep-10	2-Sep-10	Non-LLRW	NA[c]
03-E16-00-8M	45	20-Aug-10	18	16	DIP	31-Aug-10	HPS-PEPIPE-083110-013	Released[b]	2-Sep-10	2-Sep-10	Non-LLRW	NA[c]
03-E16-00-8M	46	20-Aug-10	18	16	DIP	31-Aug-10	HPS-PEPIPE-083110-013	Released[b]	2-Sep-10	2-Sep-10	Non-LLRW	NA[c]

TABLE 3-5

PARCEL UC3 EXCAVATED PIPE AND MANHOLE RADIOLOGICAL SURVEYS AND DISPOSITION SUMMARY

Trench Segment	Section No.	Date Excavated	Description			Radiological Survey				Disposition		
			Length (feet)	Diameter (inches)	Material Type	Date Performed	Survey Report No.	Survey Results	Concur-Swipe	Date Transferred	Waste Type	LLRW Bin No.
03-E16-00-8M	47	20-Aug-10	18	16	DIP	31-Aug-10	HPS-PEPIPE-083110-013	Released[b]	2-Sep-10	2-Sep-10	Non-LLRW	NA[c]
03-E16-00-8M	48	20-Aug-10	18	16	DIP	31-Aug-10	HPS-PEPIPE-083110-013	Released[b]	2-Sep-10	2-Sep-10	Non-LLRW	NA[c]
03-E16-00-8M	49	20-Aug-10	18	16	DIP	31-Aug-10	HPS-PEPIPE-083110-013	Released[b]	2-Sep-10	2-Sep-10	Non-LLRW	NA[c]
03-E16-00-8M	50	20-Aug-10	18	16	DIP	31-Aug-10	HPS-PEPIPE-083110-013	Released[b]	2-Sep-10	2-Sep-10	Non-LLRW	NA[c]
03-E16-00-8M	51	20-Aug-10	18	16	DIP	31-Aug-10	HPS-PEPIPE-083110-013	Released[b]	2-Sep-10	2-Sep-10	Non-LLRW	NA[c]
03-E16-00-8M	52	20-Aug-10	18	16	DIP	31-Aug-10	HPS-PEPIPE-083110-013	Released[b]	2-Sep-10	2-Sep-10	Non-LLRW	NA[c]
03-E16-00-1C	04	17-Aug-10	9	33	Concrete	31-Aug-10	HPS-PEPIPE-083110-012	Released[b]	2-Sep-10	7-Sep-10	Non-LLRW	NA[d]
03-E16-00-1F	01	19-Aug-10	10	24	Concrete	09-Sep-10	HPS-PEPIPE-090910-020	Released[b]	14-Sep-10	16-Sep-10	Non-LLRW	NA[d]
03-E16-00-1F	02	19-Aug-10	10	24	Concrete	09-Sep-10	HPS-PEPIPE-090910-020	Released[b]	14-Sep-10	16-Sep-10	Non-LLRW	NA[d]
03-E16-00-1F	03	19-Aug-10	10	24	Concrete	09-Sep-10	HPS-PEPIPE-090910-020	Released[b]	14-Sep-10	16-Sep-10	Non-LLRW	NA[d]
03-E16-00-1F	MH503	18-Aug-10	NA	NA	Concrete	NA	NA	NA	NA	25-Aug-10	NA[a]	GFLU001183G13 MHFU001330G11
03-E16-00-1H	MH505	19-Aug-10	NA	NA	Concrete	NA	NA	NA	NA	23-Aug-10	NA[a]	BFLU000377G12
03-E16-00-2W	MH504	17-Aug-10	NA	NA	Concrete	NA	NA	NA	NA	30-Aug-10	NA[a]	DB1149D4
03-E16-00-8M	53	20-Aug-10	18	16	DIP	31-Aug-10	HPS-PEPIPE-083110-013	Released[b]	2-Sep-10	2-Sep-10	Non-LLRW	NA[c]
03-E16-00-8M	54	20-Aug-10	18	16	DIP	31-Aug-10	HPS-PEPIPE-083110-013	Released[b]	2-Sep-10	2-Sep-10	Non-LLRW	NA[c]
03-E16-00-8M	55	20-Aug-10	18	16	DIP	31-Aug-10	HPS-PEPIPE-083110-013	Released[b]	2-Sep-10	2-Sep-10	Non-LLRW	NA[c]
03-E16-00-8M	56	20-Aug-10	18	16	DIP	31-Aug-10	HPS-PEPIPE-083110-013	Released[b]	2-Sep-10	2-Sep-10	Non-LLRW	NA[c]
03-E16-00-8M	57	20-Aug-10	18	16	DIP	31-Aug-10	HPS-PEPIPE-083110-013	Released[b]	2-Sep-10	2-Sep-10	Non-LLRW	NA[c]
03-E16-00-8M	58	20-Aug-10	18	16	DIP	31-Aug-10	HPS-PEPIPE-083110-013	Released[b]	2-Sep-10	2-Sep-10	Non-LLRW	NA[c]
03-E16-00-1F	04	19-Aug-10	10	24	Concrete	09-Sep-10	HPS-PEPIPE-090910-020	Released[b]	14-Sep-10	16-Sep-10	Non-LLRW	NA[d]
03-E16-00-1F	05	19-Aug-10	10	24	Concrete	09-Sep-10	HPS-PEPIPE-090910-020	Released[b]	14-Sep-10	16-Sep-10	Non-LLRW	NA[d]
03-E16-00-1F	06	19-Aug-10	10	24	Concrete	09-Sep-10	HPS-PEPIPE-090910-020	Released[b]	14-Sep-10	16-Sep-10	Non-LLRW	NA[d]
03-E16-00-1F	07	19-Aug-10	10	24	Concrete	09-Sep-10	HPS-PEPIPE-090910-020	Released[b]	14-Sep-10	16-Sep-10	Non-LLRW	NA[d]
03-E16-00-1F	08	19-Aug-10	10	24	Concrete	09-Sep-10	HPS-PEPIPE-090910-020	Released[b]	14-Sep-10	16-Sep-10	Non-LLRW	NA[d]
03-E16-00-1F	09	19-Aug-10	10	24	Concrete	09-Sep-10	HPS-PEPIPE-090910-020	Released[b]	14-Sep-10	16-Sep-10	Non-LLRW	NA[d]
03-E16-00-1F	10	19-Aug-10	10	24	Concrete	09-Sep-10	HPS-PEPIPE-090910-020	Released[b]	14-Sep-10	16-Sep-10	Non-LLRW	NA[d]
03-E16-00-1F	11	19-Aug-10	10	24	Concrete	09-Sep-10	HPS-PEPIPE-090910-020	Released[b]	14-Sep-10	16-Sep-10	Non-LLRW	NA[d]
03-E16-00-1F	12	19-Aug-10	10	24	Concrete	09-Sep-10	HPS-PEPIPE-090910-020	Released[b]	14-Sep-10	16-Sep-10	Non-LLRW	NA[d]
03-E16-00-1F	13	19-Aug-10	10	24	Concrete	09-Sep-10	HPS-PEPIPE-090910-020	Released[b]	14-Sep-10	16-Sep-10	Non-LLRW	NA[d]
03-E16-00-1F	14	19-Aug-10	10	24	Concrete	09-Sep-10	HPS-PEPIPE-090910-020	Released[b]	14-Sep-10	16-Sep-10	Non-LLRW	NA[d]

TABLE 3-5

PARCEL UC3 EXCAVATED PIPE AND MANHOLE RADIOLOGICAL SURVEYS AND DISPOSITION SUMMARY

Trench Segment	Section No.	Date Excavated	Description			Radiological Survey				Disposition		
			Length (feet)	Diameter (inches)	Material Type	Date Performed	Survey Report No.	Survey Results	Concur-Swipe	Date Transferred	Waste Type	LLRW Bin No.
03-E16-00-1F	15	19-Aug-10	10	24	Concrete	09-Sep-10	HPS-PEPIPE-090910-020	Released[b]	14-Sep-10	16-Sep-10	Non-LLRW	NA[d]
03-E16-00-1F	16	19-Aug-10	10	24	Concrete	09-Sep-10	HPS-PEPIPE-090910-020	Released[b]	14-Sep-10	16-Sep-10	Non-LLRW	NA[d]
03-E16-00-1F	17	19-Aug-10	10	24	Concrete	09-Sep-10	HPS-PEPIPE-090910-020	Released[b]	14-Sep-10	16-Sep-10	Non-LLRW	NA[d]
03-E16-00-1F	18	19-Aug-10	10	24	Concrete	09-Sep-10	HPS-PEPIPE-090910-020	Released[b]	14-Sep-10	16-Sep-10	Non-LLRW	NA[d]
03-E16-00-1F	19	20-Aug-10	10	24	Concrete	09-Sep-10	HPS-PEPIPE-090910-021	Released[b]	14-Sep-10	16-Sep-10	Non-LLRW	NA[d]
03-E16-00-1F	20	20-Aug-10	10	24	Concrete	09-Sep-10	HPS-PEPIPE-090910-021	Released[b]	14-Sep-10	16-Sep-10	Non-LLRW	NA[d]
03-E16-00-1F	21	20-Aug-10	10	24	Concrete	09-Sep-10	HPS-PEPIPE-090910-021	Released[b]	14-Sep-10	16-Sep-10	Non-LLRW	NA[d]
03-E16-00-1F	22	20-Aug-10	10	24	Concrete	09-Sep-10	HPS-PEPIPE-090910-021	Released[b]	14-Sep-10	16-Sep-10	Non-LLRW	NA[d]
03-E16-00-1F	23	20-Aug-10	10	24	Concrete	09-Sep-10	HPS-PEPIPE-090910-021	Released[b]	14-Sep-10	16-Sep-10	Non-LLRW	NA[d]
03-E16-00-1F	24	20-Aug-10	10	24	Concrete	09-Sep-10	HPS-PEPIPE-090910-021	Released[b]	14-Sep-10	16-Sep-10	Non-LLRW	NA[d]
03-E16-00-1F	25	20-Aug-10	10	24	Concrete	09-Sep-10	HPS-PEPIPE-090910-021	Released[b]	14-Sep-10	16-Sep-10	Non-LLRW	NA[d]
03-E16-00-1F	26	20-Aug-10	10	24	Concrete	09-Sep-10	HPS-PEPIPE-090910-021	Released[b]	14-Sep-10	16-Sep-10	Non-LLRW	NA[d]
03-E16-00-1F	27	20-Aug-10	10	24	Concrete	09-Sep-10	HPS-PEPIPE-090910-021	Released[b]	14-Sep-10	16-Sep-10	Non-LLRW	NA[d]
03-E16-00-1H	02	20-Aug-10	12	24	Concrete	07-Sep-10	HPS-PEPIPE-090710-016	Released[b]	9-Sep-10	9-Sep-10	Non-LLRW	NA[d]
03-E16-00-1H	03	20-Aug-10	12	24	Concrete	07-Sep-10	HPS-PEPIPE-090710-016	Released[b]	9-Sep-10	9-Sep-10	Non-LLRW	NA[d]
03-E16-00-1H	04	20-Aug-10	12	24	Concrete	07-Sep-10	HPS-PEPIPE-090710-016	Released[b]	9-Sep-10	9-Sep-10	Non-LLRW	NA[d]
03-E16-00-1H	05	20-Aug-10	12	24	Concrete	07-Sep-10	HPS-PEPIPE-090710-016	Released[b]	9-Sep-10	9-Sep-10	Non-LLRW	NA[d]
03-E16-00-1H	06	20-Aug-10	12	24	Concrete	07-Sep-10	HPS-PEPIPE-090710-016	Released[b]	9-Sep-10	9-Sep-10	Non-LLRW	NA[d]
03-E16-00-8M	59	25-Aug-10	18	16	DIP	01-Sep-10	HPS-PEPIPE-090110-014	Released[b]	8-Sep-10	8-Sep-10	Non-LLRW	NA[c]
03-E16-00-8M	60	25-Aug-10	18	16	DIP	01-Sep-10	HPS-PEPIPE-090110-014	Released[b]	8-Sep-10	8-Sep-10	Non-LLRW	NA[c]
03-E16-00-8M	61	25-Aug-10	18	16	DIP	01-Sep-10	HPS-PEPIPE-090110-014	Released[b]	8-Sep-10	8-Sep-10	Non-LLRW	NA[c]
03-E16-00-8M	62	25-Aug-10	18	16	DIP	01-Sep-10	HPS-PEPIPE-090110-014	Released[b]	8-Sep-10	8-Sep-10	Non-LLRW	NA[c]
03-E16-00-8M	63	25-Aug-10	18	16	DIP	01-Sep-10	HPS-PEPIPE-090110-014	Released[b]	8-Sep-10	8-Sep-10	Non-LLRW	NA[c]
03-E16-00-8M	64	25-Aug-10	18	16	DIP	01-Sep-10	HPS-PEPIPE-090110-014	Released[b]	8-Sep-10	8-Sep-10	Non-LLRW	NA[c]
03-E16-00-8M	65	25-Aug-10	18	16	DIP	01-Sep-10	HPS-PEPIPE-090110-014	Released[b]	8-Sep-10	8-Sep-10	Non-LLRW	NA[c]
03-E16-00-1F	28	20-Aug-10	10	24	Concrete	09-Sep-10	HPS-PEPIPE-090910-021	Released[b]	14-Sep-10	16-Sep-10	Non-LLRW	NA[d]
03-E16-00-1F	29	20-Aug-10	10	24	Concrete	09-Sep-10	HPS-PEPIPE-090910-021	Released[b]	14-Sep-10	16-Sep-10	Non-LLRW	NA[d]
03-E16-00-1F	30	20-Aug-10	10	24	Concrete	09-Sep-10	HPS-PEPIPE-090910-021	Released[b]	14-Sep-10	16-Sep-10	Non-LLRW	NA[d]
03-E16-00-1F	31	20-Aug-10	10	24	Concrete	09-Sep-10	HPS-PEPIPE-090910-021	Released[b]	14-Sep-10	16-Sep-10	Non-LLRW	NA[d]
03-E16-00-1F	32	20-Aug-10	10	24	Concrete	09-Sep-10	HPS-PEPIPE-090910-021	Released[b]	14-Sep-10	16-Sep-10	Non-LLRW	NA[d]
03-E16-00-1F	33	20-Aug-10	10	24	Concrete	09-Sep-10	HPS-PEPIPE-090910-021	Released[b]	14-Sep-10	16-Sep-10	Non-LLRW	NA[d]

TABLE 3-5

PARCEL UC3 EXCAVATED PIPE AND MANHOLE RADIOLOGICAL SURVEYS AND DISPOSITION SUMMARY

Trench Segment	Section No.	Date Excavated	Description			Radiological Survey				Disposition		
			Length (feet)	Diameter (inches)	Material Type	Date Performed	Survey Report No.	Survey Results	Concur-Swipe	Date Transferred	Waste Type	LLRW Bin No.
03-E16-00-1F	34	20-Aug-10	10	24	Concrete	09-Sep-10	HPS-PEPIPE-090910-021	Released[b]	14-Sep-10	16-Sep-10	Non-LLRW	NA[d]
03-E16-00-1F	35	20-Aug-10	10	24	Concrete	09-Sep-10	HPS-PEPIPE-090910-021	Released[b]	14-Sep-10	16-Sep-10	Non-LLRW	NA[d]
03-E16-00-1F	36	20-Aug-10	10	24	Concrete	09-Sep-10	HPS-PEPIPE-090910-021	Released[b]	14-Sep-10	16-Sep-10	Non-LLRW	NA[d]
03-E16-00-1F	MH507	23-Aug-10	NA	NA	Concrete	NA	NA	NA	NA	31-Aug-10	NA[a]	GFLU001225G3 GFLU001231G7
03-E16-00-1H	07	20-Aug-10	12	24	Concrete	07-Sep-10	HPS-PEPIPE-090710-016	Released[b]	9-Sep-10	10-Sep-10	Non-LLRW	NA[d]
03-E16-00-1H	08	20-Aug-10	12	24	Concrete	07-Sep-10	HPS-PEPIPE-090710-016	Released[b]	9-Sep-10	10-Sep-10	Non-LLRW	NA[d]
03-E16-00-1H	09	20-Aug-10	12	24	Concrete	07-Sep-10	HPS-PEPIPE-090710-016	Released[b]	9-Sep-10	10-Sep-10	Non-LLRW	NA[d]
03-E16-00-1H	10	20-Aug-10	12	24	Concrete	07-Sep-10	HPS-PEPIPE-090710-016	Released[b]	9-Sep-10	10-Sep-10	Non-LLRW	NA[d]
03-E16-00-1H	11	20-Aug-10	12	24	Concrete	07-Sep-10	HPS-PEPIPE-090710-016	Released[b]	9-Sep-10	10-Sep-10	Non-LLRW	NA[d]
03-E16-00-1H	12	20-Aug-10	12	24	Concrete	07-Sep-10	HPS-PEPIPE-090710-016	Released[b]	9-Sep-10	10-Sep-10	Non-LLRW	NA[d]
03-E16-00-1H	13	20-Aug-10	12	24	Concrete	07-Sep-10	HPS-PEPIPE-090710-016	Released[b]	9-Sep-10	10-Sep-10	Non-LLRW	NA[d]
03-E16-00-1H	14	20-Aug-10	12	24	Concrete	07-Sep-10	HPS-PEPIPE-090710-016	Released[b]	9-Sep-10	10-Sep-10	Non-LLRW	NA[d]
03-E16-00-1H	15	20-Aug-10	12	24	Concrete	07-Sep-10	HPS-PEPIPE-090710-016	Released[b]	9-Sep-10	10-Sep-10	Non-LLRW	NA[d]
03-E16-00-1H	16	20-Aug-10	12	24	Concrete	07-Sep-10	HPS-PEPIPE-090710-016	Released[b]	9-Sep-10	10-Sep-10	Non-LLRW	NA[d]
03-E16-00-1H	17	20-Aug-10	12	24	Concrete	07-Sep-10	HPS-PEPIPE-090710-016	Released[b]	9-Sep-10	10-Sep-10	Non-LLRW	NA[d]
03-E16-00-1H	18	20-Aug-10	12	24	Concrete	07-Sep-10	HPS-PEPIPE-090710-016	Released[b]	9-Sep-10	10-Sep-10	Non-LLRW	NA[d]
03-E16-00-1H	19	20-Aug-10	12	24	Concrete	07-Sep-10	HPS-PEPIPE-090710-016	Released[b]	9-Sep-10	10-Sep-10	Non-LLRW	NA[d]
03-E16-00-1H	75	23-Aug-10	12	24	Concrete	11-Oct-10	HPS-PEPIPE-101110-022	Released[b]	14-Oct-10	14-Oct-10	Non-LLRW	NA[d]
03-E16-00-1H	76	23-Aug-10	12	24	Concrete	11-Oct-10	HPS-PEPIPE-101110-022	Released[b]	14-Oct-10	14-Oct-10	Non-LLRW	NA[d]
03-E16-00-1H	77	23-Aug-10	12	24	Concrete	11-Oct-10	HPS-PEPIPE-101110-022	Released[b]	14-Oct-10	14-Oct-10	Non-LLRW	NA[d]
03-E16-00-1H	78	23-Aug-10	12	24	Concrete	11-Oct-10	HPS-PEPIPE-101110-022	Released[b]	14-Oct-10	14-Oct-10	Non-LLRW	NA[d]
03-E16-00-1H	79	23-Aug-10	12	24	Concrete	11-Oct-10	HPS-PEPIPE-101110-022	Released[b]	14-Oct-10	14-Oct-10	Non-LLRW	NA[d]
03-E16-00-1H	80	23-Aug-10	12	24	Concrete	11-Oct-10	HPS-PEPIPE-101110-022	Released[b]	14-Oct-10	14-Oct-10	Non-LLRW	NA[d]
03-E16-00-1H	81	23-Aug-10	12	24	Concrete	11-Oct-10	HPS-PEPIPE-101110-022	Released[b]	14-Oct-10	14-Oct-10	Non-LLRW	NA[d]
03-E16-00-1H	82	23-Aug-10	12	24	Concrete	11-Oct-10	HPS-PEPIPE-101110-022	Released[b]	14-Oct-10	14-Oct-10	Non-LLRW	NA[d]
03-E16-00-1H	83	23-Aug-10	12	24	Concrete	11-Oct-10	HPS-PEPIPE-101110-022	Released[b]	14-Oct-10	14-Oct-10	Non-LLRW	NA[d]
03-E16-00-1H	84	24-Aug-10	12	24	Concrete	11-Oct-10	HPS-PEPIPE-101110-022	Released[b]	14-Oct-10	14-Oct-10	Non-LLRW	NA[d]
03-E16-00-1H	85	24-Aug-10	12	24	Concrete	11-Oct-10	HPS-PEPIPE-101110-022	Released[b]	14-Oct-10	14-Oct-10	Non-LLRW	NA[d]
03-E16-00-8M	66	25-Aug-10	18	16	DIP	01-Sep-10	HPS-PEPIPE-090110-014	Released[b]	8-Sep-10	8-Sep-10	Non-LLRW	NA[c]
03-E16-00-8M	67	25-Aug-10	18	16	DIP	01-Sep-10	HPS-PEPIPE-090110-014	Released[b]	8-Sep-10	8-Sep-10	Non-LLRW	NA[c]

TABLE 3-5

PARCEL UC3 EXCAVATED PIPE AND MANHOLE RADIOLOGICAL SURVEYS AND DISPOSITION SUMMARY

Trench Segment	Section No.	Date Excavated	Description			Radiological Survey				Disposition		
			Length (feet)	Diameter (inches)	Material Type	Date Performed	Survey Report No.	Survey Results	Concur-Swipe	Date Transferred	Waste Type	LLRW Bin No.
03-E16-00-8M	68	25-Aug-10	18	16	DIP	01-Sep-10	HPS-PEPIPE-090110-014	Released[b]	8-Sep-10	8-Sep-10	Non-LLRW	NA[c]
03-E16-00-8M	69	25-Aug-10	18	16	DIP	01-Sep-10	HPS-PEPIPE-090110-014	Released[b]	8-Sep-10	8-Sep-10	Non-LLRW	NA[c]
03-E16-00-8M	70	25-Aug-10	18	16	DIP	01-Sep-10	HPS-PEPIPE-090110-014	Released[b]	8-Sep-10	8-Sep-10	Non-LLRW	NA[c]
03-E16-00-8M	71	25-Aug-10	18	16	DIP	01-Sep-10	HPS-PEPIPE-090110-014	Released[b]	8-Sep-10	8-Sep-10	Non-LLRW	NA[c]
03-E16-00-8M	72	25-Aug-10	18	16	DIP	01-Sep-10	HPS-PEPIPE-090110-014	Released[b]	8-Sep-10	8-Sep-10	Non-LLRW	NA[c]
03-E16-00-8M	73	25-Aug-10	18	16	DIP	01-Sep-10	HPS-PEPIPE-090110-014	Released[b]	8-Sep-10	8-Sep-10	Non-LLRW	NA[c]
03-E16-00-8M	74	25-Aug-10	18	16	DIP	01-Sep-10	HPS-PEPIPE-090110-014	Released[b]	8-Sep-10	8-Sep-10	Non-LLRW	NA[c]
03-E16-00-8M	75	25-Aug-10	18	16	DIP	01-Sep-10	HPS-PEPIPE-090110-014	Released[b]	8-Sep-10	8-Sep-10	Non-LLRW	NA[c]
03-E16-00-8M	76	25-Aug-10	18	16	DIP	01-Sep-10	HPS-PEPIPE-090110-014	Released[b]	8-Sep-10	8-Sep-10	Non-LLRW	NA[c]
03-E16-00-1H	100	25-Aug-10	12	24	Concrete	12-Oct-10	HPS-PEPIPE-101210-023	Released[b]	14-Oct-10	14-Oct-10	Non-LLRW	NA[d]
03-E16-00-1H	101	25-Aug-10	12	24	Concrete	12-Oct-10	HPS-PEPIPE-101210-023	Released[b]	14-Oct-10	14-Oct-10	Non-LLRW	NA[d]
03-E16-00-1H	102	25-Aug-10	12	24	Concrete	12-Oct-10	HPS-PEPIPE-101210-023	Released[b]	14-Oct-10	14-Oct-10	Non-LLRW	NA[d]
03-E16-00-1H	103	25-Aug-10	12	24	Concrete	12-Oct-10	HPS-PEPIPE-101210-023	Released[b]	14-Oct-10	14-Oct-10	Non-LLRW	NA[d]
03-E16-00-1H	104	25-Aug-10	12	24	Concrete	12-Oct-10	HPS-PEPIPE-101210-023	Released[b]	14-Oct-10	14-Oct-10	Non-LLRW	NA[d]
03-E16-00-1H	105	25-Aug-10	12	24	Concrete	12-Oct-10	HPS-PEPIPE-101210-023	Released[b]	14-Oct-10	14-Oct-10	Non-LLRW	NA[d]
03-E16-00-1H	106	25-Aug-10	12	24	Concrete	12-Oct-10	HPS-PEPIPE-101210-023	Released[b]	14-Oct-10	14-Oct-10	Non-LLRW	NA[d]
03-E16-00-1H	107	25-Aug-10	12	24	Concrete	12-Oct-10	HPS-PEPIPE-101210-023	Released[b]	14-Oct-10	14-Oct-10	Non-LLRW	NA[d]
03-E16-00-1H	108	25-Aug-10	12	24	Concrete	12-Oct-10	HPS-PEPIPE-101210-023	Released[b]	14-Oct-10	14-Oct-10	Non-LLRW	NA[d]
03-E16-00-1H	109	25-Aug-10	12	24	Concrete	12-Oct-10	HPS-PEPIPE-101210-023	Released[b]	14-Oct-10	14-Oct-10	Non-LLRW	NA[d]
03-E16-00-1H	110	26-Aug-10	12	24	Concrete	12-Oct-10	HPS-PEPIPE-101210-023	Released[b]	14-Oct-10	14-Oct-10	Non-LLRW	NA[d]
03-E16-00-1H	111	26-Aug-10	12	24	Concrete	13-Oct-10	HPS-PEPIPE-101310-024	Released[b]	14-Oct-10	19-Oct-10	Non-LLRW	NA[d]
03-E16-00-1H	112	26-Aug-10	12	24	Concrete	13-Oct-10	HPS-PEPIPE-101310-024	Released[b]	14-Oct-10	19-Oct-10	Non-LLRW	NA[d]
03-E16-00-1H	113	26-Aug-10	12	24	Concrete	13-Oct-10	HPS-PEPIPE-101310-024	Released[b]	14-Oct-10	19-Oct-10	Non-LLRW	NA[d]
03-E16-00-1H	114	26-Aug-10	12	24	Concrete	13-Oct-10	HPS-PEPIPE-101310-024	Released[b]	14-Oct-10	19-Oct-10	Non-LLRW	NA[d]
03-E16-00-1H	20	25-Aug-10	12	24	Concrete	08-Sep-10	HPS-PEPIPE-090810-017	Released[b]	9-Sep-10	10-Sep-10	Non-LLRW	NA[d]
03-E16-00-1H	21	25-Aug-10	12	24	Concrete	08-Sep-10	HPS-PEPIPE-090810-017	Released[b]	9-Sep-10	10-Sep-10	Non-LLRW	NA[d]
03-E16-00-1H	22	25-Aug-10	12	24	Concrete	08-Sep-10	HPS-PEPIPE-090810-017	Released[b]	9-Sep-10	10-Sep-10	Non-LLRW	NA[d]
03-E16-00-1H	23	25-Aug-10	12	24	Concrete	08-Sep-10	HPS-PEPIPE-090810-017	Released[b]	9-Sep-10	10-Sep-10	Non-LLRW	NA[d]
03-E16-00-1H	24	25-Aug-10	12	24	Concrete	08-Sep-10	HPS-PEPIPE-090810-017	Released[b]	9-Sep-10	10-Sep-10	Non-LLRW	NA[d]
03-E16-00-1H	25	25-Aug-10	12	24	Concrete	08-Sep-10	HPS-PEPIPE-090810-017	Released[b]	9-Sep-10	10-Sep-10	Non-LLRW	NA[d]
03-E16-00-1H	26	25-Aug-10	12	24	Concrete	08-Sep-10	HPS-PEPIPE-090810-017	Released[b]	9-Sep-10	10-Sep-10	Non-LLRW	NA[d]

TABLE 3-5

PARCEL UC3 EXCAVATED PIPE AND MANHOLE RADIOLOGICAL SURVEYS AND DISPOSITION SUMMARY

Trench Segment	Section No.	Date Excavated	Description			Radiological Survey				Disposition		
			Length (feet)	Diameter (inches)	Material Type	Date Performed	Survey Report No.	Survey Results	Concur-Swipe	Date Transferred	Waste Type	LLRW Bin No.
03-E16-00-1H	27	25-Aug-10	12	24	Concrete	08-Sep-10	HPS-PEPIPE-090810-017	Released[b]	9-Sep-10	10-Sep-10	Non-LLRW	NA[d]
03-E16-00-1H	28	25-Aug-10	12	24	Concrete	08-Sep-10	HPS-PEPIPE-090810-017	Released[b]	9-Sep-10	10-Sep-10	Non-LLRW	NA[d]
03-E16-00-1H	29	25-Aug-10	12	24	Concrete	08-Sep-10	HPS-PEPIPE-090810-017	Released[b]	9-Sep-10	10-Sep-10	Non-LLRW	NA[d]
03-E16-00-1H	30	25-Aug-10	12	24	Concrete	08-Sep-10	HPS-PEPIPE-090810-017	Released[b]	9-Sep-10	10-Sep-10	Non-LLRW	NA[d]
03-E16-00-1H	31	25-Aug-10	12	24	Concrete	08-Sep-10	HPS-PEPIPE-090810-017	Released[b]	9-Sep-10	10-Sep-10	Non-LLRW	NA[d]
03-E16-00-1H	32	25-Aug-10	12	24	Concrete	08-Sep-10	HPS-PEPIPE-090810-017	Released[b]	9-Sep-10	10-Sep-10	Non-LLRW	NA[d]
03-E16-00-1H	33	25-Aug-10	12	24	Concrete	08-Sep-10	HPS-PEPIPE-090810-017	Released[b]	9-Sep-10	10-Sep-10	Non-LLRW	NA[d]
03-E16-00-1H	34	25-Aug-10	12	24	Concrete	08-Sep-10	HPS-PEPIPE-090810-017	Released[b]	9-Sep-10	10-Sep-10	Non-LLRW	NA[d]
03-E16-00-1H	35	25-Aug-10	12	24	Concrete	08-Sep-10	HPS-PEPIPE-090810-017	Released[b]	9-Sep-10	10-Sep-10	Non-LLRW	NA[d]
03-E16-00-1H	36	25-Aug-10	12	24	Concrete	08-Sep-10	HPS-PEPIPE-090810-017	Released[b]	9-Sep-10	10-Sep-10	Non-LLRW	NA[d]
03-E16-00-1H	37	25-Aug-10	12	24	Concrete	08-Sep-10	HPS-PEPIPE-090810-017	Released[b]	9-Sep-10	10-Sep-10	Non-LLRW	NA[d]
03-E16-00-1H	38	27-Aug-10	12	24	Concrete	08-Sep-10	HPS-PEPIPE-090810-018	Released[b]	14-Sep-10	15-Sep-10	Non-LLRW	NA[d]
03-E16-00-1H	39	27-Aug-10	12	24	Concrete	08-Sep-10	HPS-PEPIPE-090810-018	Released[b]	14-Sep-10	15-Sep-10	Non-LLRW	NA[d]
03-E16-00-1H	40	27-Aug-10	12	24	Concrete	08-Sep-10	HPS-PEPIPE-090810-018	Released[b]	14-Sep-10	15-Sep-10	Non-LLRW	NA[d]
03-E16-00-1H	41	27-Aug-10	12	24	Concrete	08-Sep-10	HPS-PEPIPE-090810-018	Released[b]	14-Sep-10	15-Sep-10	Non-LLRW	NA[d]
03-E16-00-1H	42	27-Aug-10	12	24	Concrete	08-Sep-10	HPS-PEPIPE-090810-018	Released[b]	14-Sep-10	15-Sep-10	Non-LLRW	NA[d]
03-E16-00-1H	43	27-Aug-10	12	24	Concrete	08-Sep-10	HPS-PEPIPE-090810-018	Released[b]	14-Sep-10	15-Sep-10	Non-LLRW	NA[d]
03-E16-00-1H	86	24-Aug-10	12	24	Concrete	11-Oct-10	HPS-PEPIPE-101110-022	Released[b]	14-Oct-10	14-Oct-10	Non-LLRW	NA[d]
03-E16-00-1H	87	25-Aug-10	12	24	Concrete	11-Oct-10	HPS-PEPIPE-101110-022	Released[b]	14-Oct-10	14-Oct-10	Non-LLRW	NA[d]
03-E16-00-1H	88	25-Aug-10	12	24	Concrete	11-Oct-10	HPS-PEPIPE-101110-022	Released[b]	14-Oct-10	14-Oct-10	Non-LLRW	NA[d]
03-E16-00-1H	89	25-Aug-10	12	24	Concrete	11-Oct-10	HPS-PEPIPE-101110-022	Released[b]	14-Oct-10	14-Oct-10	Non-LLRW	NA[d]
03-E16-00-1H	90	25-Aug-10	12	24	Concrete	11-Oct-10	HPS-PEPIPE-101110-022	Released[b]	14-Oct-10	14-Oct-10	Non-LLRW	NA[d]
03-E16-00-1H	91	25-Aug-10	12	24	Concrete	11-Oct-10	HPS-PEPIPE-101110-022	Released[b]	14-Oct-10	14-Oct-10	Non-LLRW	NA[d]
03-E16-00-1H	92	25-Aug-10	12	24	Concrete	11-Oct-10	HPS-PEPIPE-101110-022	Released[b]	14-Oct-10	14-Oct-10	Non-LLRW	NA[d]
03-E16-00-1H	93	26-Aug-10	12	24	Concrete	12-Oct-10	HPS-PEPIPE-101210-023	Released[b]	14-Oct-10	14-Oct-10	Non-LLRW	NA[d]
03-E16-00-1H	94	26-Aug-10	12	24	Concrete	12-Oct-10	HPS-PEPIPE-101210-023	Released[b]	14-Oct-10	14-Oct-10	Non-LLRW	NA[d]
03-E16-00-1H	95	26-Aug-10	12	24	Concrete	12-Oct-10	HPS-PEPIPE-101210-023	Released[b]	14-Oct-10	14-Oct-10	Non-LLRW	NA[d]
03-E16-00-1H	96	26-Aug-10	12	24	Concrete	12-Oct-10	HPS-PEPIPE-101210-023	Released[b]	14-Oct-10	14-Oct-10	Non-LLRW	NA[d]
03-E16-00-1H	97	26-Aug-10	12	24	Concrete	12-Oct-10	HPS-PEPIPE-101210-023	Released[b]	14-Oct-10	14-Oct-10	Non-LLRW	NA[d]
03-E16-00-1H	98	26-Aug-10	12	24	Concrete	12-Oct-10	HPS-PEPIPE-101210-023	Released[b]	14-Oct-10	14-Oct-10	Non-LLRW	NA[d]
03-E16-00-1H	99	26-Aug-10	12	24	Concrete	12-Oct-10	HPS-PEPIPE-101210-023	Released[b]	14-Oct-10	14-Oct-10	Non-LLRW	NA[d]

TABLE 3-5

PARCEL UC3 EXCAVATED PIPE AND MANHOLE RADIOLOGICAL SURVEYS AND DISPOSITION SUMMARY

Trench Segment	Section No.	Date Excavated	Description			Radiological Survey				Disposition		
			Length (feet)	Diameter (inches)	Material Type	Date Performed	Survey Report No.	Survey Results	Concur-Swipe	Date Transferred	Waste Type	LLRW Bin No.
03-E16-00-2A	MH514	26-Aug-10	NA	NA	Concrete	NA	NA	Released[b]	NA	30-Aug-10	NA[a]	DB1149D4
03-E16-00-2D	MH639	26-Aug-10	NA	NA	Concrete	NA	NA	NA	NA	30-Aug-10	NA[a]	DB1149D4
03-E16-00-8M	77	27-Aug-10	18	16	DIP	02-Sep-10	HPS-PEPIPE-090210-015	Released[b]	9-Sep-10	9-Sep-10	Non-LLRW	NA[c]
03-E16-00-8M	78	27-Aug-10	18	16	DIP	02-Sep-10	HPS-PEPIPE-090210-015	Released[b]	9-Sep-10	9-Sep-10	Non-LLRW	NA[c]
03-E16-00-8M	79	27-Aug-10	18	16	DIP	02-Sep-10	HPS-PEPIPE-090210-015	Released[b]	9-Sep-10	9-Sep-10	Non-LLRW	NA[c]
03-E16-00-8M	80	27-Aug-10	18	16	DIP	02-Sep-10	HPS-PEPIPE-090210-015	Released[b]	9-Sep-10	9-Sep-10	Non-LLRW	NA[c]
03-E16-00-8M	81	27-Aug-10	18	16	DIP	02-Sep-10	HPS-PEPIPE-090210-015	Released[b]	9-Sep-10	9-Sep-10	Non-LLRW	NA[c]
03-E16-00-8M	82	27-Aug-10	18	16	DIP	02-Sep-10	HPS-PEPIPE-090210-015	Released[b]	9-Sep-10	9-Sep-10	Non-LLRW	NA[c]
03-E16-00-8M	83	27-Aug-10	18	16	DIP	02-Sep-10	HPS-PEPIPE-090210-015	Released[b]	9-Sep-10	9-Sep-10	Non-LLRW	NA[c]
03-E16-00-8M	84	27-Aug-10	18	16	DIP	02-Sep-10	HPS-PEPIPE-090210-015	Released[b]	9-Sep-10	9-Sep-10	Non-LLRW	NA[c]
03-E16-00-8M	85	27-Aug-10	18	16	DIP	02-Sep-10	HPS-PEPIPE-090210-015	Released[b]	9-Sep-10	9-Sep-10	Non-LLRW	NA[c]
03-E16-00-8M	86	27-Aug-10	18	16	DIP	02-Sep-10	HPS-PEPIPE-090210-015	Released[b]	9-Sep-10	9-Sep-10	Non-LLRW	NA[c]
03-E16-00-8M	87	27-Aug-10	18	16	DIP	02-Sep-10	HPS-PEPIPE-090210-015	Released[b]	9-Sep-10	9-Sep-10	Non-LLRW	NA[c]
03-E16-00-8M	88	27-Aug-10	18	16	DIP	02-Sep-10	HPS-PEPIPE-090210-015	Released[b]	9-Sep-10	9-Sep-10	Non-LLRW	NA[c]
03-E16-00-8P	MH640	26-Aug-10	NA	NA	Concrete	NA	NA	NA	NA	30-Aug-10	NA[a]	DB1149D4
03-E16-00-1H	115	27-Aug-10	12	24	Concrete	13-Oct-10	HPS-PEPIPE-101310-024	Released[b]	19-Oct-10	21-Oct-10	Non-LLRW	NA[d]
03-E16-00-1H	116	27-Aug-10	12	24	Concrete	13-Oct-10	HPS-PEPIPE-101310-024	Released[b]	19-Oct-10	21-Oct-10	Non-LLRW	NA[d]
03-E16-00-1H	117	27-Aug-10	12	24	Concrete	13-Oct-10	HPS-PEPIPE-101310-024	Released[b]	19-Oct-10	21-Oct-10	Non-LLRW	NA[d]
03-E16-00-1H	118	27-Aug-10	12	24	Concrete	13-Oct-10	HPS-PEPIPE-101310-024	Released[b]	19-Oct-10	21-Oct-10	Non-LLRW	NA[d]
03-E16-00-1H	119	27-Aug-10	12	24	Concrete	13-Oct-10	HPS-PEPIPE-101310-024	Released[b]	19-Oct-10	21-Oct-10	Non-LLRW	NA[d]
03-E16-00-1H	120	27-Aug-10	12	24	Concrete	13-Oct-10	HPS-PEPIPE-101310-024	Released[b]	19-Oct-10	21-Oct-10	Non-LLRW	NA[d]
03-E16-00-1H	121	27-Aug-10	12	24	Concrete	13-Oct-10	HPS-PEPIPE-101310-024	Released[b]	19-Oct-10	21-Oct-10	Non-LLRW	NA[d]
03-E16-00-1H	122	27-Aug-10	12	24	Concrete	13-Oct-10	HPS-PEPIPE-101310-024	Released[b]	19-Oct-10	21-Oct-10	Non-LLRW	NA[d]
03-E16-00-1H	44	27-Aug-10	12	24	Concrete	08-Sep-10	HPS-PEPIPE-090810-018	Released[b]	14-Sep-10	15-Sep-10	Non-LLRW	NA[d]
03-E16-00-1H	45	27-Aug-10	12	24	Concrete	08-Sep-10	HPS-PEPIPE-090810-018	Released[b]	14-Sep-10	15-Sep-10	Non-LLRW	NA[d]
03-E16-00-1H	46	27-Aug-10	12	24	Concrete	08-Sep-10	HPS-PEPIPE-090810-018	Released[b]	14-Sep-10	15-Sep-10	Non-LLRW	NA[d]
03-E16-00-1H	47	27-Aug-10	12	24	Concrete	08-Sep-10	HPS-PEPIPE-090810-018	Released[b]	14-Sep-10	15-Sep-10	Non-LLRW	NA[d]
03-E16-00-1H	48	27-Aug-10	12	24	Concrete	08-Sep-10	HPS-PEPIPE-090810-018	Released[b]	14-Sep-10	15-Sep-10	Non-LLRW	NA[d]
03-E16-00-1H	49	27-Aug-10	12	24	Concrete	08-Sep-10	HPS-PEPIPE-090810-018	Released[b]	14-Sep-10	15-Sep-10	Non-LLRW	NA[d]
03-E16-00-1H	50	27-Aug-10	12	24	Concrete	08-Sep-10	HPS-PEPIPE-090810-018	Released[b]	14-Sep-10	15-Sep-10	Non-LLRW	NA[d]
03-E16-00-1H	51	27-Aug-10	12	24	Concrete	08-Sep-10	HPS-PEPIPE-090810-018	Released[b]	14-Sep-10	15-Sep-10	Non-LLRW	NA[d]

TABLE 3-5

PARCEL UC3 EXCAVATED PIPE AND MANHOLE RADIOLOGICAL SURVEYS AND DISPOSITION SUMMARY

Trench Segment	Section No.	Date Excavated	Description			Radiological Survey				Disposition		
			Length (feet)	Diameter (inches)	Material Type	Date Performed	Survey Report No.	Survey Results	Concur-Swipe	Date Transferred	Waste Type	LLRW Bin No.
03-E16-00-1H	52	27-Aug-10	12	24	Concrete	08-Sep-10	HPS-PEPIPE-090810-018	Released[b]	14-Sep-10	15-Sep-10	Non-LLRW	NA[d]
03-E16-00-1H	53	27-Aug-10	12	24	Concrete	08-Sep-10	HPS-PEPIPE-090810-018	Released[b]	14-Sep-10	15-Sep-10	Non-LLRW	NA[d]
03-E16-00-1H	54	27-Aug-10	12	24	Concrete	08-Sep-10	HPS-PEPIPE-090810-018	Released[b]	14-Sep-10	15-Sep-10	Non-LLRW	NA[d]
03-E16-00-1H	55	27-Aug-10	12	24	Concrete	08-Sep-10	HPS-PEPIPE-090810-018	Released[b]	14-Sep-10	15-Sep-10	Non-LLRW	NA[d]
03-E16-00-2C	MH522	30-Aug-10	NA	NA	Concrete	NA	NA	Released[b]	NA	31-Aug-10	NA[a]	GFLU001225G3
03-E16-00-2N	MH521	30-Aug-10	NA	NA	Concrete	NA	NA	NA	NA	31-Aug-10	NA[a]	GFLU001228G9
03-E16-00-3B	MH526	31-Aug-10	NA	NA	Concrete	NA	NA	NA	NA	31-Aug-10	NA[a]	GFLU001225G3
03-E16-00-8M	MH641	30-Aug-10	NA	NA	Concrete	NA	NA	NA	NA	31-Aug-10	NA[a]	GFLU001228G9
03-E16-74-2J	MH520	31-Aug-10	NA	NA	Concrete	NA	NA	NA	NA	31-Aug-10	NA[a]	GFLU001228G9
03-E16-74-2Q	MH525	31-Aug-10	NA	NA	Concrete	NA	NA	NA	NA	31-Aug-10	NA[a]	GFLU001231G7
03-E16-00-1H	56	01-Sep-10	12	24	Concrete	08-Sep-10	HPS-PEPIPE-090810-019	Released[b]	14-Sep-10	15-Sep-10	Non-LLRW	NA[d]
03-E16-00-1H	57	01-Sep-10	12	24	Concrete	08-Sep-10	HPS-PEPIPE-090810-019	Released[b]	14-Sep-10	15-Sep-10	Non-LLRW	NA[d]
03-E16-00-1H	58	01-Sep-10	12	24	Concrete	08-Sep-10	HPS-PEPIPE-090810-019	Released[b]	14-Sep-10	15-Sep-10	Non-LLRW	NA[d]
03-E16-00-1H	59	01-Sep-10	12	24	Concrete	08-Sep-10	HPS-PEPIPE-090810-019	Released[b]	14-Sep-10	15-Sep-10	Non-LLRW	NA[d]
03-E16-00-3A	MH529	01-Sep-10	NA	NA	Concrete	NA	NA	NA	NA	2-Sep-10	NA[a]	DB1138D4
03-E16-00-3D	MH531	02-Sep-10	NA	NA	Concrete	NA	NA	NA	NA	2-Sep-10	NA[a]	DB1181D3
03-E16-74-3F	MH530	02-Sep-10	NA	NA	Concrete	NA	NA	NA	NA	2-Sep-10	NA[a]	DB1138D4
03-E16-00-5B	MH549	10-Sep-10	NA	NA	Concrete	NA	NA	NA	NA	14-Sep-10	NA[a]	GFLU001170G14
03-E16-00-5D	MH551	10-Sep-10	NA	NA	Concrete	NA	NA	NA	NA	15-Sep-10	NA[a]	BKRU026414G13
03-E16-00-5E	MH550	13-Sep-10	NA	NA	Concrete	NA	NA	NA	NA	15-Sep-10	NA[a]	BKRU026414G13
03-E16-00-5F	MH571	13-Sep-10	NA	NA	Concrete	NA	NA	NA	NA	16-Sep-10	NA[a]	GFLU001237G13 GFLU001244G8
03-E16-00-5J	MH572	13-Sep-10	NA	NA	Concrete	NA	NA	NA	NA	15-Sep-10	NA[a]	BKRU026414G13 GFLU001237G13 GFLU001244G8
03-E16-00-5L	MH573	10-Sep-10	NA	NA	Concrete	NA	NA	NA	NA	15-Sep-10	NA[a]	BKRU026414G13 GFLU001244G8
03-E16-00-1H	60	01-Sep-10	12	24	Concrete	08-Sep-10	HPS-PEPIPE-090810-019	Released[b]	14-Sep-10	15-Sep-10	Non-LLRW	NA[d]
03-E16-00-1H	61	01-Sep-10	12	24	Concrete	08-Sep-10	HPS-PEPIPE-090810-019	Released[b]	14-Sep-10	15-Sep-10	Non-LLRW	NA[d]
03-E16-00-1H	62	01-Sep-10	12	24	Concrete	08-Sep-10	HPS-PEPIPE-090810-019	Released[b]	14-Sep-10	15-Sep-10	Non-LLRW	NA[d]
03-E16-00-1H	63	01-Sep-10	12	24	Concrete	08-Sep-10	HPS-PEPIPE-090810-019	Released[b]	14-Sep-10	15-Sep-10	Non-LLRW	NA[d]
03-E16-00-1H	64	01-Sep-10	12	24	Concrete	08-Sep-10	HPS-PEPIPE-090810-019	Released[b]	14-Sep-10	15-Sep-10	Non-LLRW	NA[d]

TABLE 3-5

PARCEL UC3 EXCAVATED PIPE AND MANHOLE RADIOLOGICAL SURVEYS AND DISPOSITION SUMMARY

Trench Segment	Section No.	Date Excavated	Description			Radiological Survey				Disposition		
			Length (feet)	Diameter (inches)	Material Type	Date Performed	Survey Report No.	Survey Results	Concur-Swipe	Date Transferred	Waste Type	LLRW Bin No.
03-E16-00-1H	65	01-Sep-10	12	24	Concrete	08-Sep-10	HPS-PEPIPE-090810-019	Released[b]	14-Sep-10	15-Sep-10	Non-LLRW	NA[d]
03-E16-00-1H	66	01-Sep-10	12	24	Concrete	08-Sep-10	HPS-PEPIPE-090810-019	Released[b]	14-Sep-10	15-Sep-10	Non-LLRW	NA[d]
03-E16-00-1H	67	01-Sep-10	12	24	Concrete	08-Sep-10	HPS-PEPIPE-090810-019	Released[b]	14-Sep-10	15-Sep-10	Non-LLRW	NA[d]
03-E16-00-1H	68	01-Sep-10	12	24	Concrete	08-Sep-10	HPS-PEPIPE-090810-019	Released[b]	14-Sep-10	15-Sep-10	Non-LLRW	NA[d]
03-E16-00-1H	69	01-Sep-10	12	24	Concrete	08-Sep-10	HPS-PEPIPE-090810-019	Released[b]	14-Sep-10	15-Sep-10	Non-LLRW	NA[d]
03-E16-00-1H	70	01-Sep-10	12	24	Concrete	08-Sep-10	HPS-PEPIPE-090810-019	Released[b]	14-Sep-10	15-Sep-10	Non-LLRW	NA[d]
03-E16-00-1H	71	01-Sep-10	12	24	Concrete	08-Sep-10	HPS-PEPIPE-090810-019	Released[b]	14-Sep-10	15-Sep-10	Non-LLRW	NA[d]
03-E16-00-1H	72	01-Sep-10	12	24	Concrete	08-Sep-10	HPS-PEPIPE-090810-019	Released[b]	14-Sep-10	15-Sep-10	Non-LLRW	NA[d]
03-E16-00-1H	73	01-Sep-10	12	24	Concrete	08-Sep-10	HPS-PEPIPE-090810-019	Released[b]	14-Sep-10	15-Sep-10	Non-LLRW	NA[d]
03-E16-00-3R	MH534	28-Sep-10	NA	NA	Concrete	NA	NA	NA	NA	5-Oct-10	NA[a]	BKRU026401
03-E16-74-3J	MH532	02-Sep-10	NA	NA	Concrete	NA	NA	NA	NA	2-Sep-10	NA[a]	DB1181D3
03-E16-00-4E	MH541	04-Oct-10	NA	NA	Concrete	NA	NA	NA	NA	4-Oct-10	NA[a]	BKRU026401 GFLU001163G12
03-E16-00-4G	MH539	01-Oct-10	NA	NA	Concrete	NA	NA	NA	NA	8-Oct-10	NA[a]	GFLU001073G9
03-E16-00-4H	MH540	01-Oct-10	NA	NA	Concrete	NA	NA	NA	NA	4-Oct-10	NA[a]	BKRU026401
03-E16-00-4O	MH542	01-Oct-10	NA	NA	Concrete	NA	NA	NA	NA	4-Oct-10	NA[a]	GFLU001163G12
03-E16-00-4P	MH544	30-Sep-10	NA	NA	Concrete	NA	NA	NA	NA	8-Oct-10	NA[a]	GFLU001073G9
03-E16-00-3E	MH535	29-Sep-10	NA	NA	Concrete	NA	NA	NA	NA	8-Oct-10	NA[a]	BKRU025503G12 BKRU026354G12
03-E16-00-4A	MH536	28-Sep-10	NA	NA	Brick	NA	NA	NA	NA	5-Oct-10	NA[a]	BKRU026401
03-E16-00-4C	MH537	29-Sep-10	NA	NA	Concrete	NA	NA	NA	NA	5-Oct-10	NA[a]	BKRU026401
03-E16-00-4B	MH538	30-Sep-10	NA	NA	Concrete	NA	NA	NA	NA	8-Oct-10	NA[a]	BKRU025503G12 BKRU026354G12

Notes:

[a] Not applicable; piping was disposed of as LLRW to facilitate completion of the main HPNS traffic corridor and since no radiological surveys were performed and no solid samples were collected, no data were available to indicate whether the piping was LLRW or non-LLRW.

[b] Radiologically surveyed and released.

[c] Not applicable; surveyed and released for metals recycling.

[d] Not applicable; surveyed and released to DON non-LLRW contractor for off-site disposal or recycling.

Abbreviations and Acronyms:

DIP – ductile iron pipe
DON – Department of the Navy
HPNS – Hunters Point Naval Shipyard
LLRW – low-level radioactive waste
MH – manhole
NA – not applicable
Non-LLRW – non-low-level radioactive waste

TABLE 3-6

PARCEL UC3 PIPE AND MANHOLE SEDIMENT SAMPLES AND DISPOSITION SUMMARY

Trench Survey Unit	Trench Segment Identification	Section No.	Date Excavated	Description			Sediment Sample					Disposition		
				Length (feet)	Diameter (inches)	Material Type	Date Collected	Sample Identification No.	No. of Samples	Elevated ROC	Results (pCi/g)	Date Transferred	Waste Type	LLRW Bin No.
TU166	03-E16-00-1D	01	05-Apr-10	3	16	Concrete	5-Apr-10	03-PEPI-0014-01	1	Cs-137	0.22526	09-Apr-10	LLRW[a]	GFLU001279G11
TU166	03-E16-00-2E	01	02-Apr-10	6	8	CIP	2-Apr-10	03-PEPI-0013-01	1	NA	NA	09-Apr-10	Non-LLRW[b]	GFLU001279G11
TU166	03-E16-56-3J	01	06-Apr-10	8	16	Concrete	6-Apr-10	03-PEPI-0015-01	1	Cs-137	0.23351	07-Apr-10	LLRW[a]	GFLU001279G11
TU169	03-E16-00-1K	01	26-Apr-10	8	4	CIP	26-Apr-10	03-PEPI-0019-01	1	Cs-137	0.12991	26-Apr-10	LLRW[a]	MHFU001340G12
TU169	03-E16-00-3N	01	22-Apr-10	8	4	CIP	22-Apr-10	03-PEPI-0018-01	1	NA	NA	22-Apr-10	Non-LLRW[b]	GFLU001204G11 MHFU001330G10
TU169	03-E16-00-3N	MH543	22-Apr-10	NA	NA	Brick	22-Apr-10	03-PEMH543-013-01	1	Cs-137	0.33662	22-Apr-10	LLRW[a]	GFLU001204G11 MHFU001330G10
TU169	03-E16-00-3N	MH636	13-May-10	NA	NA	Concrete	23-Apr-10	03-PEMH636-014-01	1	Cs-137	0.20938	14-May-10	LLRW[a]	GFLU001127G12 GFLU001163G11
TU170	03-E16-00-1Y	01	30-Apr-10	6	4	Steel	30-Apr-10	03-PEPI-0020-01	1	NA	NA	03-May-10	Non-LLRW[b]	GFLU001053G11 GFLU001200G11
TU175	03-E16-00-2B	MH515	09-Aug-10	NA	NA	Concrete	09-Aug-10	03-PEMH515-015-01	1	NA	NA	12-Aug-10	Non-LLRW[b]	BKRU026096G3
TU176	03-E16-00-2G	MH523	10-Aug-10	NA	NA	Concrete	10-Aug-10	03-PEMH523-016-01	1	NA	NA	12-Aug-10	Non-LLRW[b]	BKRU025997G12 BKRU026096G3
TU178	03-E16-00-1D	02	23-Jul-10	3	16	Concrete	23-Jul-10	03-PEPI-0021-01	1	Cs-137	0.1222	23-Jul-10	LLRW[a]	BKRU026202G3
TU181	03-E16-00-1R	MH512	24-Aug-10	NA	NA	Brick	24-Aug-10	03-PEMH512-018-01	1	NA	NA	30-Aug-10	Non-LLRW[b]	GFLU001228G9 MHFU001653G9
TU181	03-E16-00-1T	MH513	24-Aug-10	NA	NA	Concrete	24-Aug-10	03-PEMH513-017-01	1	NA	NA	30-Aug-10	Non-LLRW[b]	GFLU001228G9 MHFU001653G9
TU184	03-E16-00-1H	01	01-Sep-10	12	24	Concrete	01-Sep-10	03-PEPI-0022-01 03-PEPI-0022-02	2	NA	NA	01-Sep-10	Non-LLRW[b]	DB1150D4
TU187	03-E16-00-1H	74	28-Sep-10	12	24	Concrete	28-Sep-10	03-PEPI-0023-01	1	NA	NA	05-Oct-10	Non-LLRW[b]	BKRU026401
TU187	03-E16-00-3L	MH533	28-Sep-10	NA	NA	Brick	28-Sep-10	03-PEMH533-019-01	1	NA	NA	11-Oct-10	Non-LLRW[b]	BKRU025503G12 BKRU026354G12

Notes:

[a] LLRW bins were disposed of off-site at either the U.S. Ecology facility in Idaho or the Energy Solutions facility in Clive, Utah.

[b] Non-LLRW indicates that no radiological contamination was identified; however, piping was disposed of in LLRW bins to expedite completion of the main traffic corridor through HPNS.

Abbreviations and Acronyms:

CIP – cast iron pipe
Cs-137 – cesium-137
HPNS – Hunters Point Naval Shipyard
LLRW – low-level radioactive waste
MH – manhole
NA – not applicable
Non-LLRW – non-low-level radioactive waste
pCi/g – picocuries per gram
ROC – radionuclide of concern
TU – Trench Survey Unit

This page intentionally left blank.

TABLE 3-7

PARCEL UC3
STORM DRAIN AND SANITARY SEWER PIPING REMAINING IN PLACE

Trench Survey Unit	Trench Segment or Component Remaining in Place	Component Type	Linear Feet of Pipe	
			Remaining In Place	Removed
TU173	03-E16-00-1J	Sanitary Sewer	30[a]	264
TU174	03-E16-74-3J	Storm Drain	4[a]	94
TU177	03-E16-00-1A	Sanitary Sewer	22[b]	359
	03-E16-00-1V	Storm Drain	9[b]	0
	MH500	Manhole	NA	NA
	03-E16-00-8M	Sanitary Sewer	22[b]	1,600
TU178	MH502[c]	Manhole	NA	NA
TU179	03-E16-00-1E	Storm Drain	21[a]	35
	03-E16-00-1G	Storm Drain	7[b]	22

Notes:

[a] Linear feet is an engineering estimate based on field observations.

[b] Linear feet is estimated based on historical drawings.

[c] The back wall of MH502 was left in place since it was embedded in the SFRA property retaining wall; the remainder of MH502 was removed and radiologically surveyed with no elevated results.

Abbreviations and Acronyms:

MH – manhole
NA – not applicable
SFRA – San Francisco Redevelopment Agency
TU – Trench Survey Unit

This page intentionally left blank.

TABLE 3-8

PARCEL UC3 TRENCH SURVEY UNIT REMEDIATION SUMMARY

Trench Survey Unit No.	Trench Segment	Date Removed	Soil Removed (cy)	LLRW Bin No.[a] or ES Number
TU169	03-E16-00-3N	01-Jun-10	1.5	BKRU026440G11
TU169	03-E16-00-1K	22-Jun-10	72	ES-284
TU169	03-E16-00-1K	23-Jun-10	24	ES-284
TU169	03-E16-00-1K	23-Jun-10	84	ES-285
TU169	03-E16-00-3N	23-Jun-10	24	ES-285
TU169	03-E16-00-3N	24-Jun-10	144	ES-285
TU169	03-E16-00-3N	25-Jun-10	60	ES-286
TU169	03-E16-00-3N	25-Jun-10	48	ES-285
TU169	03-E16-00-3N	28-Jun-10	96	ES-286
TU169	03-E16-00-3N	08-Jul-10	0.5	BKRU026468G9
TU170	03-E16-00-1K	28-May-10	1.5	BKRU026440G11
TU170	03-E16-00-1K	08-Jun-10	1.5	BFLU000396G13
TU170	03-E16-00-1K	14-Jun-10	24	ES-281
TU170	03-E16-00-1W	14-Jun-10	108	ES-281
TU170	03-E16-00-1W	15-Jun-10	12	ES-281
TU170	03-E16-00-1Y	15-Jun-10	24	ES-281
TU170	03-E16-00-8G	15-Jun-10	24	ES-281
TU170	03-E16-00-1Y	16-Jun-10	30	ES-281
TU170	03-E16-00-1Y	17-Jun-10	36	ES-281
TU170	03-E16-00-1Y	18-Jun-10	66	ES-284
TU170	03-E16-00-1W	21-Jun-10	15	ES-284
TU170	03-E16-00-1X	21-Jun-10	36	ES-281
TU170	03-E16-00-1X	21-Jun-10	108	ES-284
TU170	03-E16-00-1W	22-Jun-10	48	ES-284
TU175	03-E16-00-2B	23-Aug-10	2	MHFU001330G11

Notes:

[a] LLRW bins were disposed of off-site at either the U.S. Ecology facility in Idaho or the Energy Solutions facility in Clive, Utah.

Abbreviations and Acronyms:

cy – cubic yard
ES – Excavated Soil Survey Unit
LLRW – low-level radioactive waste
TU – Trench Survey Unit

This page intentionally left blank.

TABLE 3-9

PARCEL UC3 INSTALLATION RESTORATION PROGRAM SITE CHEMICALS OF CONCERN

Site	Area	VOCs	SVOCs	PAHs	PCBs	TOG	TPH	TPH-d	TPH-g	Metals
IR-04	Scrap Yard	S/GW	S	S	S	S/GW	NA	S/GW	S/GW	S/GW
IR-56	Railroad tracks and yard south of Crisp Road	S/GW	S	S	NA	S	GW	NA	NA	S/GW
IR-74	Building 815 (FUDs)	NA	S	NA	NA	NA	S	NA	NA	NA

Abbreviations and Acronyms:
FUDS – Formerly Utilized Defense Site
GW – groundwater
IR – Installation Restoration
NA – not applicable
PAH – polynuclear aromatic hydrocarbon
PCB – polychlorinated biphenyl
S – soil
SVOC – semivolatile organic compound
TOG – total oil and grease
TPH – total petroleum hydrocarbons
TPH-d – total petroleum hydrocarbons quantified as diesel
TPH-g – total petroleum hydrocarbons quantified as gasoline
VOC – volatile organic compound

This page intentionally left blank.

FIGURES

This page intentionally left blank.

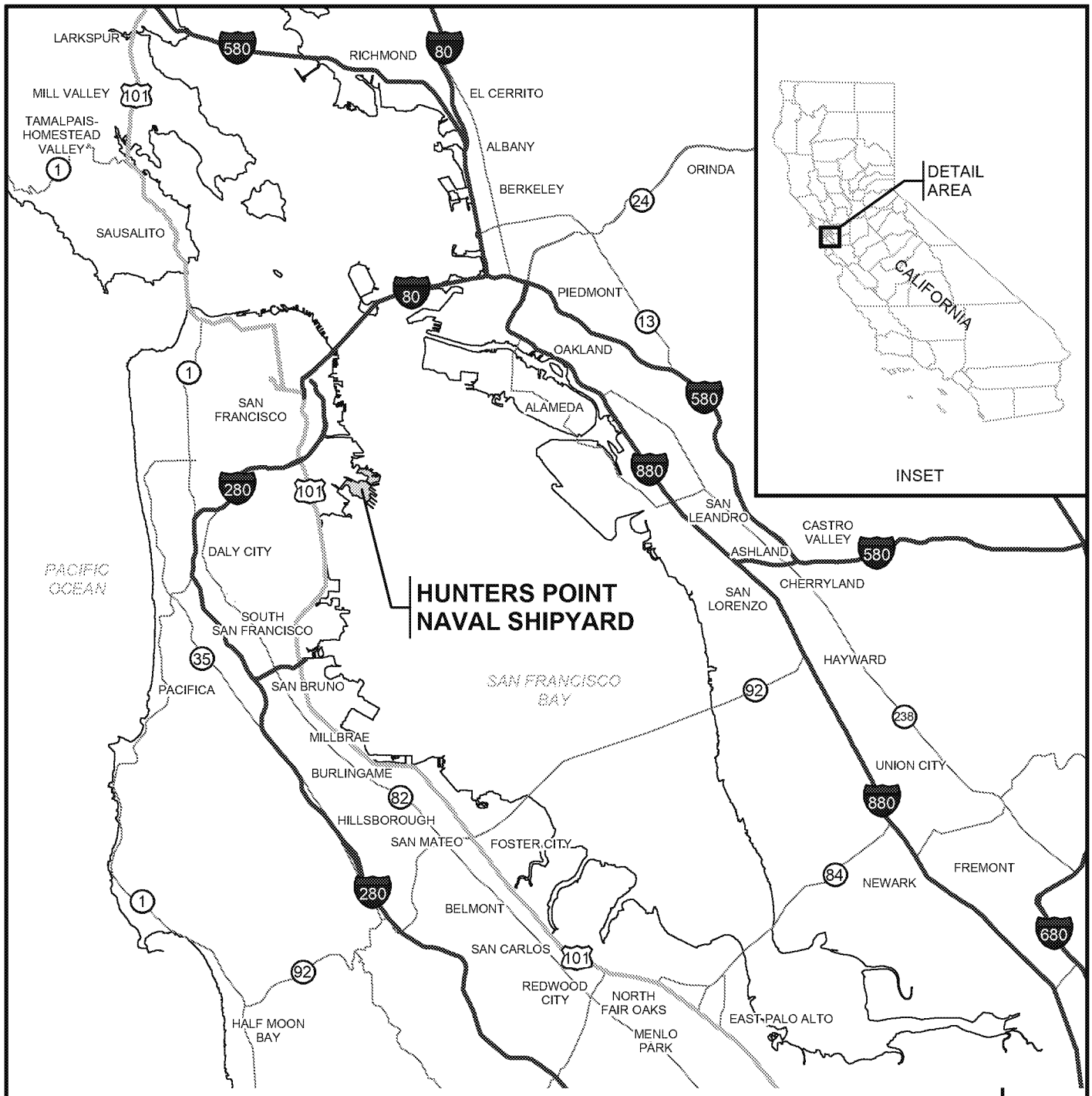

LEGEND

- STATE HIGHWAY
- US HIGHWAY
- INTERSTATE HIGHWAY
- HUNTERS POINT NAVAL SHIPYARD
- WATER

BASE REALIGNMENT AND CLOSURE
PROGRAM MANAGEMENT OFFICE WEST
SAN DIEGO, CALIFORNIA

PARCEL UC3
RADIOLOGICAL REMOVAL ACTION COMPLETION REPORT

FIGURE 1-1
REGIONAL LOCATION MAP

HUNTERS POINT NAVAL SHIPYARD, SAN FRANCISCO, CALIFORNIA

REVIEW: A
AUTHOR: MS
DCN: EMAC-8823-0003-0106
FILE NUMBER: 120015R7475.mxd

TETRA TECH EC, INC.

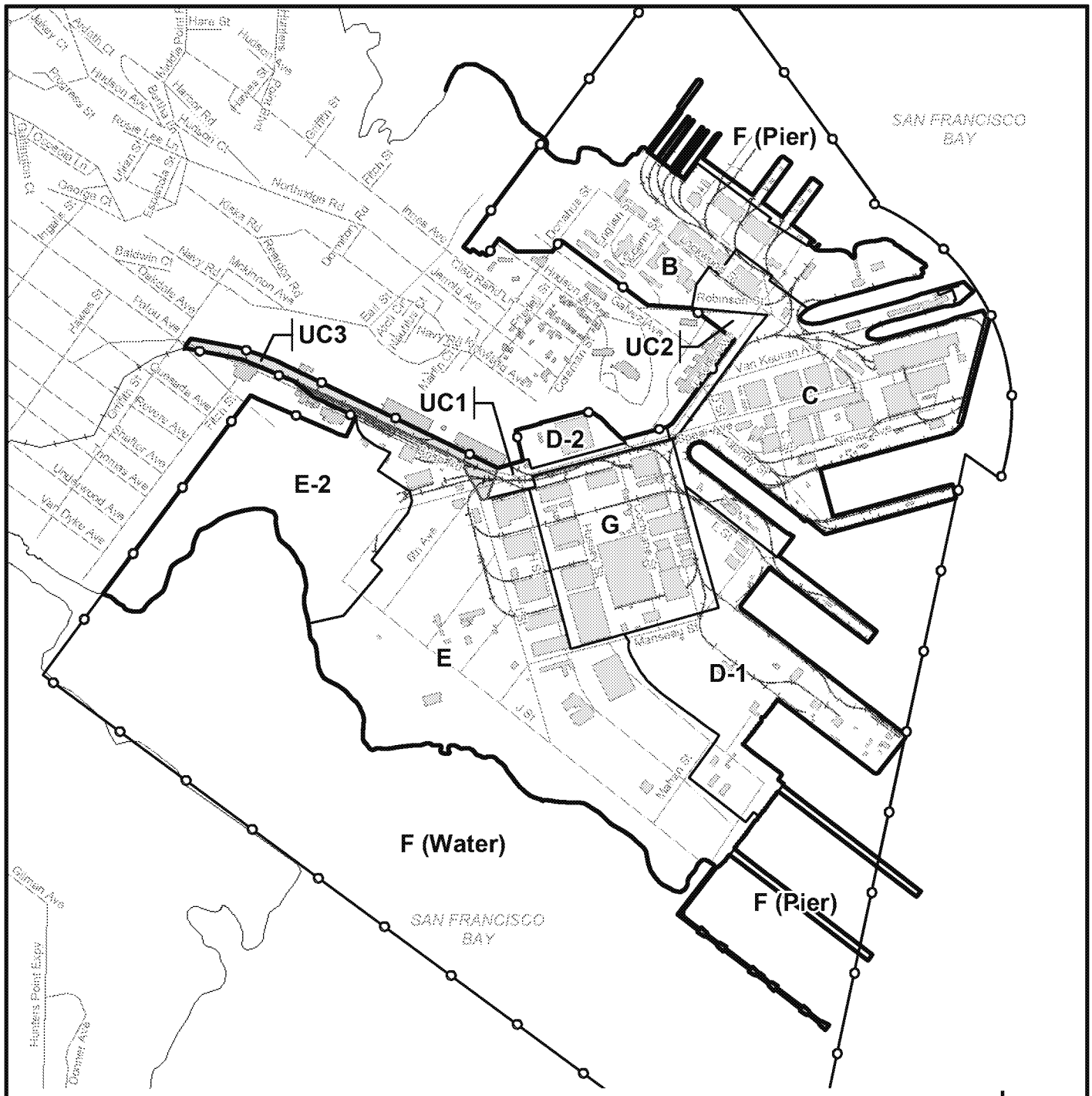

LEGEND

- ROAD
- RAILROAD
- NAVY PROPERTY BOUNDARY
- BUILDING
- PARCEL UC3
- PARCEL
- HUNTERS POINT NAVAL SHIPYARD BOUNDARY
- WATER

600 0 600 1,200 Feet

N

BASE REALIGNMENT AND CLOSURE
PROGRAM MANAGEMENT OFFICE WEST
SAN DIEGO, CALIFORNIA

PARCEL UC3
RADIOLOGICAL REMOVAL ACTION COMPLETION REPORT

FIGURE 1-2
HUNTERS POINT NAVAL SHIPYARD PARCEL LOCATIONS
HUNTERS POINT NAVAL SHIPYARD, SAN FRANCISCO, CALIFORNIA

REVIEW: A
AUTHOR: MS
DCN: EMAC-8823-0003-0106
FILE NUMBER: 120015S7476.mxd

TETRA TECH EC, INC.

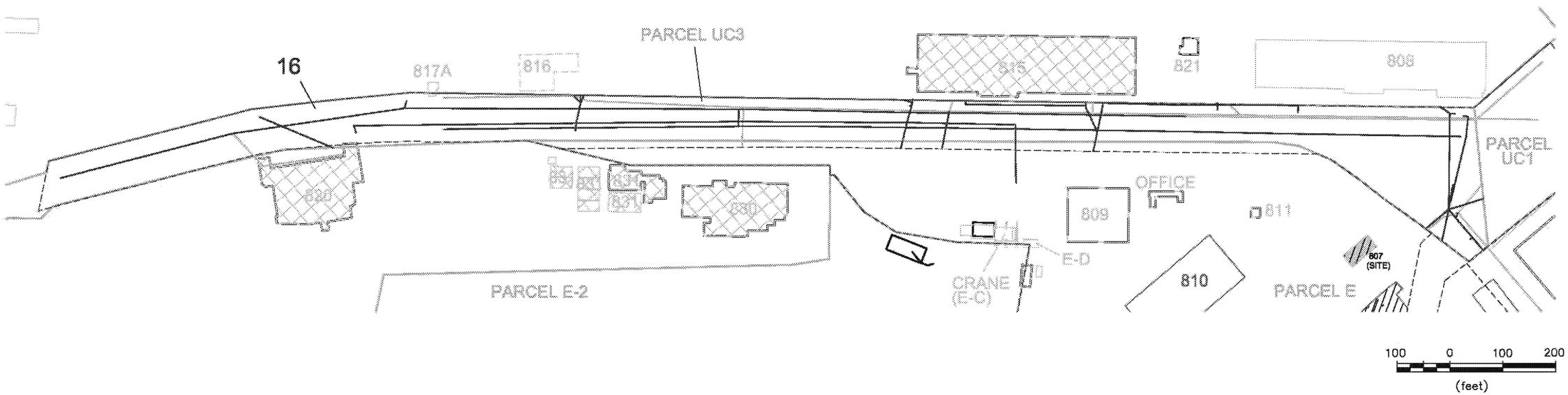

LEGEND

- SANITARY SEWER
- STORM DRAIN
- WORK AREA BOUNDARY
- 16 — WORK AREA NUMBER
- PARCEL BOUNDARY
- 810 — IMPACTED BUILDING AND BUILDING NUMBER
- 808 — NON-IMPACTED BUILDING AND BUILDING NUMBER
- 815 — IMPACTED FUD SITE (FORMERLY USED DEFENSE SITE) AND BUILDING NUMBER
- 807 — DEMOLISHED IMPACTED BUILDING AND PREVIOUS BUILDING NUMBER
- 816 — IMPACTED BUILDING THAT OBTAINED REGULATORY RELEASE AND BUILDING NUMBER

BASE REALIGNMENT AND CLOSURE
PROGRAM MANAGEMENT OFFICE WEST
SAN DIEGO, CALIFORNIA

PARCEL UC3 RADIOLOGICAL REMOVAL ACTION COMPLETION REPORT

FIGURE 3-1

PARCEL UC3 STORM DRAIN AND SANITARY SEWER SYSTEMS

HUNTERS POINT NAVAL SHIPYARD, SAN FRANCISCO, CA

REVISION:
AUTHOR: A.CRABTREE
DCN: EMAC-8823-0003-0106
FILE: SEE BELOW

TETRA TECH EC, INC.

\\Ecis143fs2\projects\CAD Project Files\CT0 003 Parcel UC3 RACR Cad files\PARCEL UC3 RACR FIGURE 3-1_02-02-12.dwg

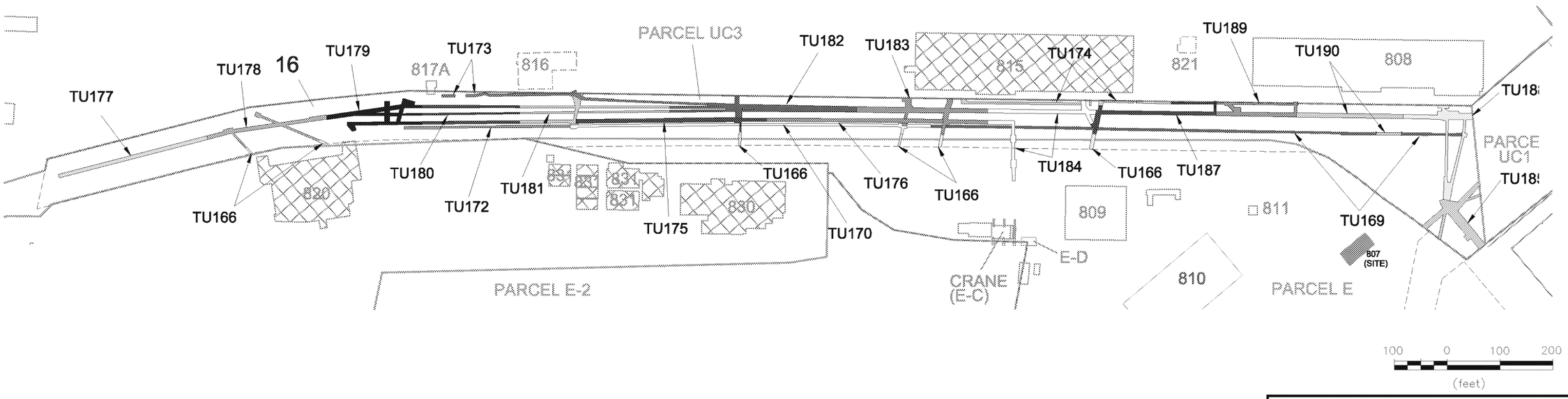

BASE REALIGNMENT AND CLOSURE
PROGRAM MANAGEMENT OFFICE WEST
SAN DIEGO, CALIFORNIA

PARCEL UC3 RADIOLOGICAL REMOVAL ACTION COMPLETION REPORT

FIGURE 3-2

PARCEL UC3 WORK AREA BOUNDARIES AND TRENCH SURVEY UNITS

HUNTERS POINT NAVAL SHIPYARD, SAN FRANCISCO, CA

REVISION:
AUTHOR: A.CRABTREE
DCN: EMAC-8823-0003-0106
FILE: SEE BELOW

TETRA TECH EC, INC.

P:\CAD Project Files\CT0 003 Parcel UC3 RACR Cad files\PARCEL UC3 RACR FIGURE 3-2_02-02-12.dwg

LEGEND

- FINAL STATUS SURVEY SAMPLE LOCATION (WALL SAMPLES PROJECTED TO EDGE OF TRENCH BASE)
- MH505 — MANHOLE (REMOVED)
- ROAD
- TU — TRENCH SURVEY UNIT
- 816 — NON-IMPACTED BUILDING AND BUILDING NUMBER
- 820 — FORMERLY USED DEFENSE SITE
- 16 — WORK AREA BOUNDARY
- WATER

TRENCH ID

XX-XXX-XX-XX

- SEGMENT NUMBER
- IR SITE ID, 00 IF NON-IR SITE
- WORK/BUILDING AREA
- CTO OR TO NUMBER

NOTE:

NO ELEVATED TRENCH UNIT INVESTIGATION ANALYTICAL RESULTS IDENTIFIED IN WORK AREA 16 WEST

N

40 0 40 80 Feet

BASE REALIGNMENT AND CLOSURE
PROGRAM MANAGEMENT OFFICE WEST
SAN DIEGO, CALIFORNIA

PARCEL UC3
RADIOLOGICAL REMOVAL ACTION COMPLETION REPORT

FIGURE 4-1
WORK AREA 16 WEST
TRENCH SURVEY UNITS
HUNTERS POINT NAVAL SHIPYARD, SAN FRANCISCO, CALIFORNIA

REVIEW: D
AUTHOR: MS
DCN: EMAC-8823-0003-0106
FILE NUMBER: 120015L7477.mxd

TETRA TECH EC, INC.

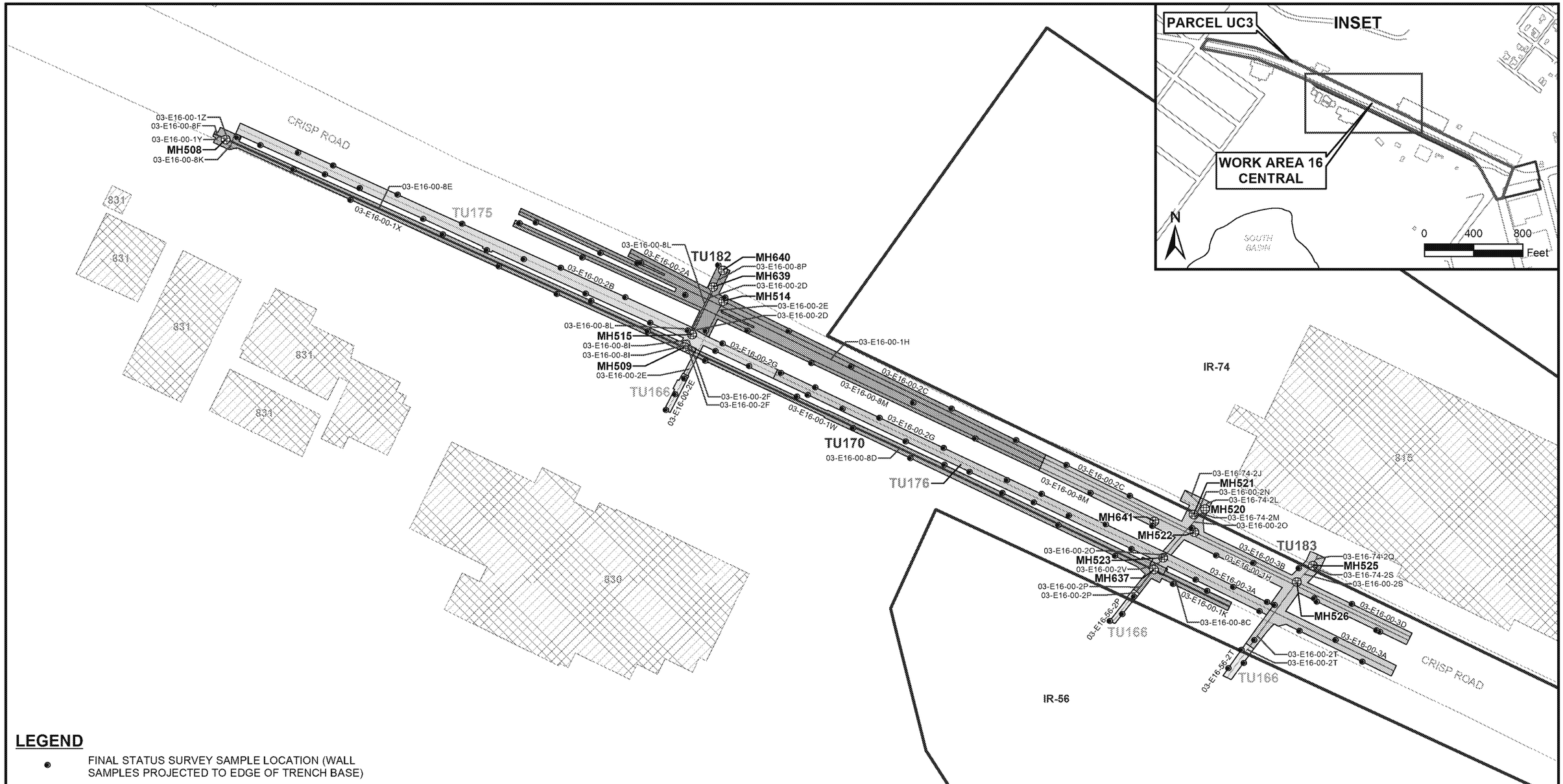

LEGEND

- FINAL STATUS SURVEY SAMPLE LOCATION (WALL SAMPLES PROJECTED TO EDGE OF TRENCH BASE)
- MH540 — MANHOLE (REMOVED)
- ROAD
- TU — TRENCH SURVEY UNIT
- IR-56 — INSTALLATION RESTORATION SITE AND SITE NUMBER
- 815 — FORMERLY USED DEFENSE SITE
- 16 — WORK AREA BOUNDARY
- WATER

TRENCH ID

XX-XXX-XX-XX

- SEGMENT NUMBER
- IR SITE ID, 00 IF NON-IR SITE
- WORK/BUILDING AREA
- CTO OR TO NUMBER

N

30 0 30 60 Feet

BASE REALIGNMENT AND CLOSURE
PROGRAM MANAGEMENT OFFICE WEST
SAN DIEGO, CALIFORNIA

PARCEL UC3
RADIOLOGICAL REMOVAL ACTION COMPLETION REPORT
FIGURE 5-1
WORK AREA 16 CENTRAL
TRENCH SURVEY UNITS
HUNTERS POINT NAVAL SHIPYARD, SAN FRANCISCO, CALIFORNIA

REVIEW: C
AUTHOR: MS
DCN: EMAC-8823-0003-0106
FILE NUMBER: 120015L7478.mxd

TETRA TECH EC, INC.

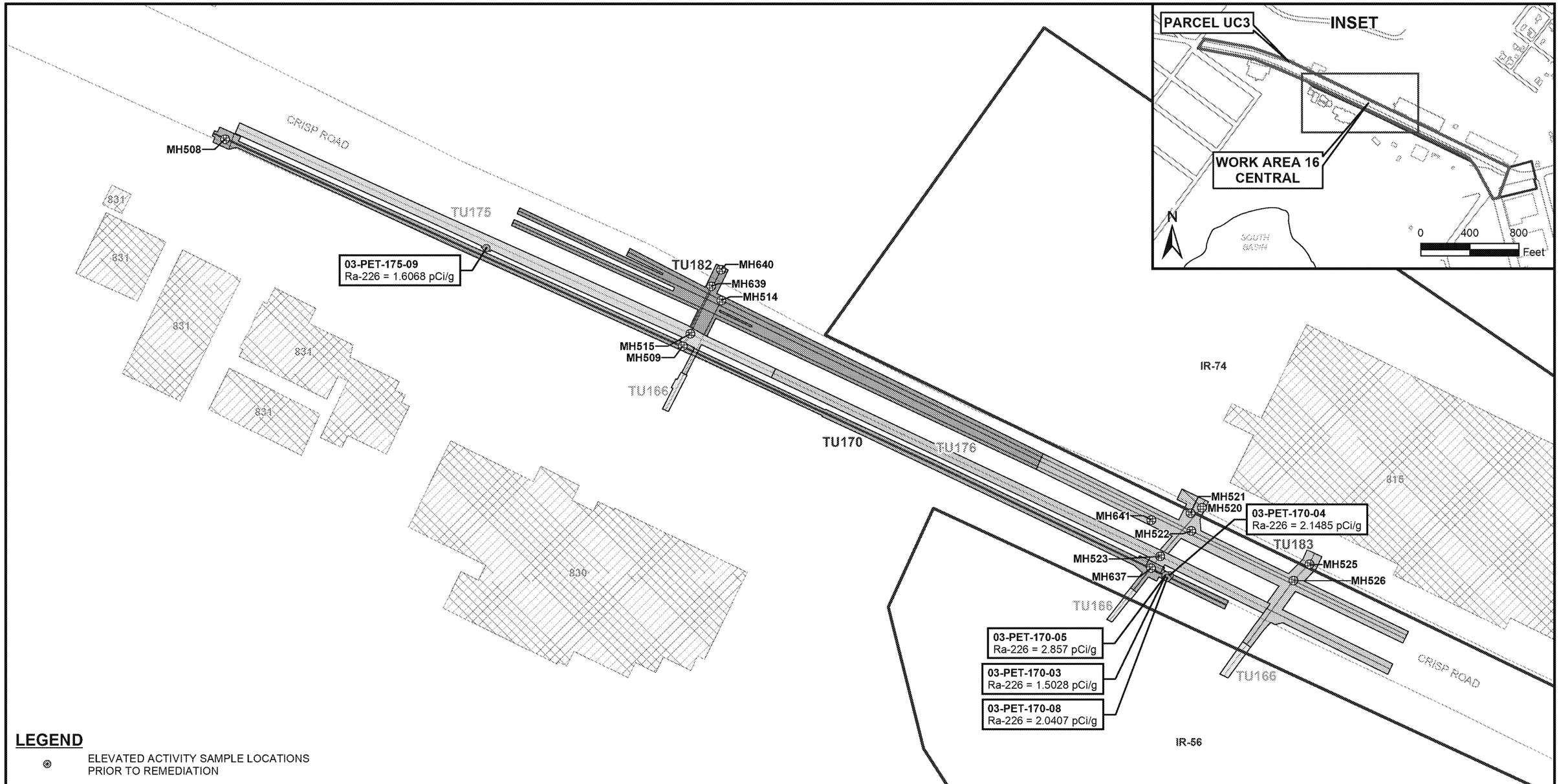

LEGEND

- ELEVATED ACTIVITY SAMPLE LOCATIONS PRIOR TO REMEDIATION
- MH540 — MANHOLE (REMOVED)
- ROAD
- TU — TRENCH SURVEY UNIT
- IR-56 — INSTALLATION RESTORATION SITE AND SITE NUMBER
- 816 — FORMERLY USED DEFENSE SITE
- 16 — WORK AREA BOUNDARY
- WATER

NOTES:

pCi/g - picocuries per gram

Ra-226 - radium-226

SAMPLE ID → 03-PET-170-05
RESULT → Ra-226 = 2.857 pCi/G

N

30 0 30 60 Feet

BASE REALIGNMENT AND CLOSURE
PROGRAM MANAGEMENT OFFICE WEST
SAN DIEGO, CALIFORNIA

PARCEL UC3
RADIOLOGICAL REMOVAL ACTION COMPLETION REPORT
FIGURE 5-2
WORK AREA 16 CENTRAL
ELEVATED SAMPLE LOCATIONS PRIOR TO REMEDIATION
HUNTERS POINT NAVAL SHIPYARD, SAN FRANCISCO, CALIFORNIA

REVIEW: B
AUTHOR: MS
DCN: EMAC-8823-0003-0106
FILE NUMBER: 120015A7479.mxd

TETRA TECH EC, INC.

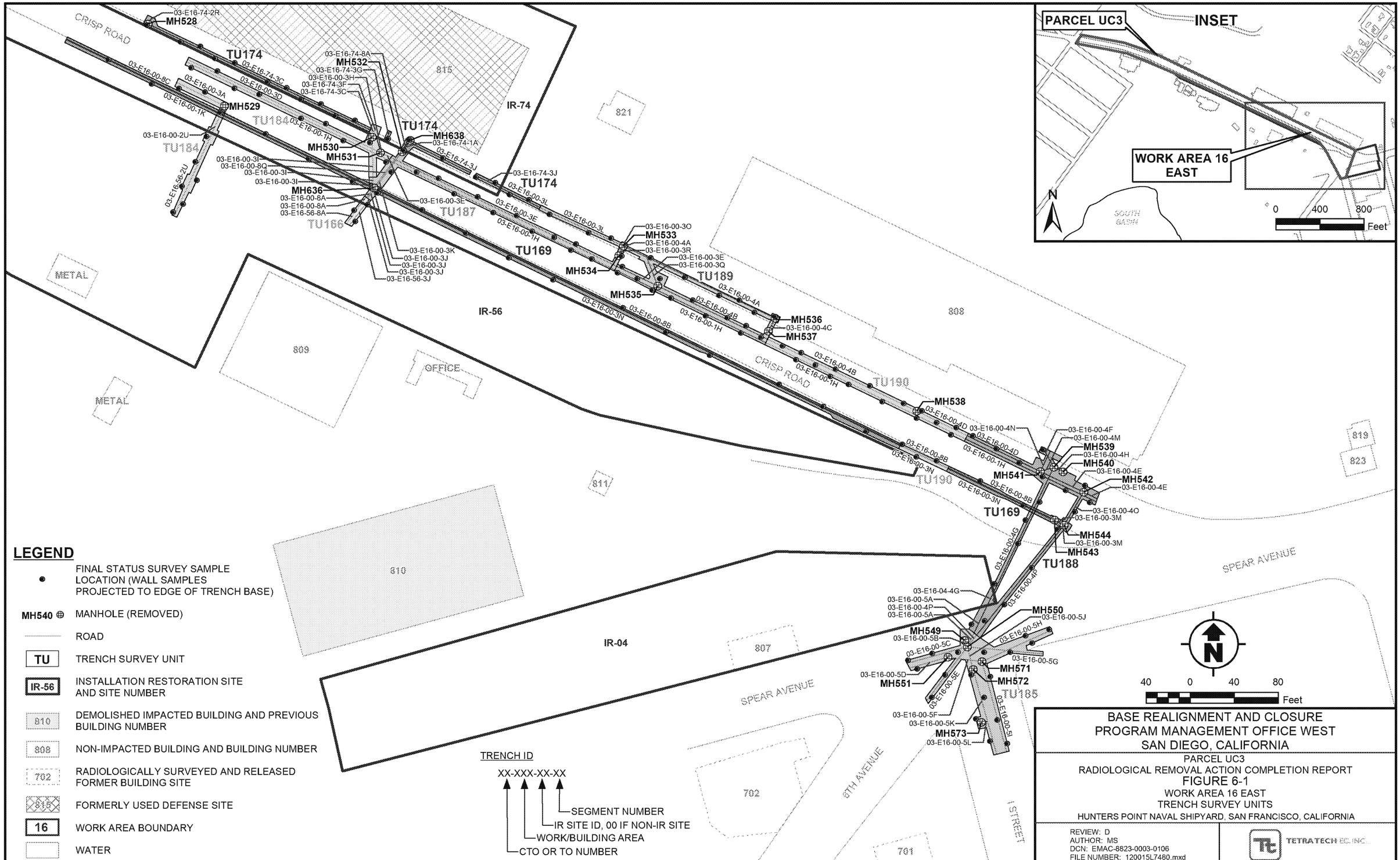

BASE REALIGNMENT AND CLOSURE
PROGRAM MANAGEMENT OFFICE WEST
SAN DIEGO, CALIFORNIA

PARCEL UC3
RADIOLOGICAL REMOVAL ACTION COMPLETION REPORT
FIGURE 6-1
WORK AREA 16 EAST
TRENCH SURVEY UNITS
HUNTERS POINT NAVAL SHIPYARD, SAN FRANCISCO, CALIFORNIA

REVIEW: D
AUTHOR: MS
DCN: EMAC-8823-0003-0106
FILE NUMBER: 120015L7480.mxd

TETRA TECH EC, INC.

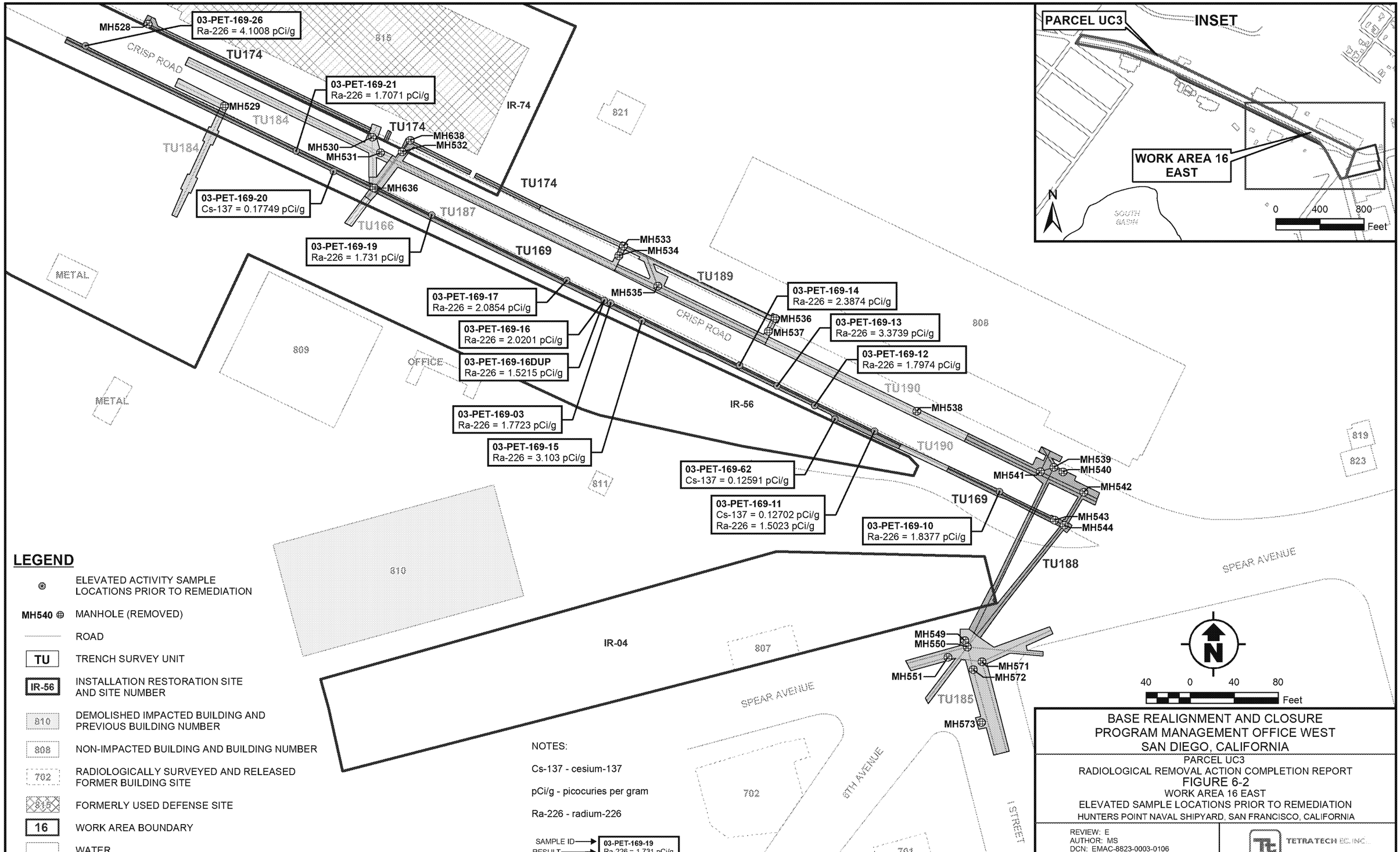
03-PET-169-26
Ra-226 = 4.1008 pCi/g
MH528
CRISP ROAD
TU174
816
03-PET-169-21
Ra-226 = 1.7071 pCi/g
MH529
TU184
IR-74
821
TU174
MH638
MH532
MH530
MH531
TU184
MH636
03-PET-169-20
Cs-137 = 0.17749 pCi/g
TU174
TU187
TU166
03-PET-169-19
Ra-226 = 1.731 pCi/g
TU169
MH533
MH534
TU189
METAL
03-PET-169-17
Ra-226 = 2.0854 pCi/g
MH535
03-PET-169-14
Ra-226 = 2.3874 pCi/g
MH536
MH537
03-PET-169-13
Ra-226 = 3.3739 pCi/g
03-PET-169-16
Ra-226 = 2.0201 pCi/g
CRISP ROAD
808
809
03-PET-169-16DUP
Ra-226 = 1.5215 pCi/g
OFFICE
03-PET-169-12
Ra-226 = 1.7974 pCi/g
TU190
METAL
IR-56
MH538
03-PET-169-03
Ra-226 = 1.7723 pCi/g
819
03-PET-169-15
Ra-226 = 3.103 pCi/g
TU190
823
MH539
MH540
03-PET-169-62
Cs-137 = 0.12591 pCi/g
MH541
MH542
811
TU169
03-PET-169-11
Cs-137 = 0.12702 pCi/g
Ra-226 = 1.5023 pCi/g
MH543
MH544
03-PET-169-10
Ra-226 = 1.8377 pCi/g
TU188
810
SPEAR AVENUE
IR-04
807
MH549
MH550
MH571
MH572
MH551
TU185
SPEAR AVENUE
MH573
702
6TH AVENUE
I STREET
701
PARCEL UC3
INSET
WORK AREA 16 EAST
N
SOUTH BASIN
0 400 800
Feet
N
40 0 40 80
Feet
LEGEND
ELEVATED ACTIVITY SAMPLE LOCATIONS PRIOR TO REMEDIATION
MH540 MANHOLE (REMOVED)
ROAD
TU TRENCH SURVEY UNIT
IR-56 INSTALLATION RESTORATION SITE AND SITE NUMBER
810 DEMOLISHED IMPACTED BUILDING AND PREVIOUS BUILDING NUMBER
808 NON-IMPACTED BUILDING AND BUILDING NUMBER
702 RADIOLOGICALLY SURVEYED AND RELEASED FORMER BUILDING SITE
816 FORMERLY USED DEFENSE SITE
16 WORK AREA BOUNDARY
WATER
NOTES:
Cs-137 - cesium-137
pCi/g - picocuries per gram
Ra-226 - radium-226
SAMPLE ID 03-PET-169-19
RESULT Ra-226 = 1.731 pCi/g
BASE REALIGNMENT AND CLOSURE
PROGRAM MANAGEMENT OFFICE WEST
SAN DIEGO, CALIFORNIA
PARCEL UC3
RADIOLOGICAL REMOVAL ACTION COMPLETION REPORT
FIGURE 6-2
WORK AREA 16 EAST
ELEVATED SAMPLE LOCATIONS PRIOR TO REMEDIATION
HUNTERS POINT NAVAL SHIPYARD, SAN FRANCISCO, CALIFORNIA
REVIEW: E
AUTHOR: MS
DCN: EMAC-8823-0003-0106
FILE NUMBER: 120015A7481.mxd
TETRATECH EC, INC.

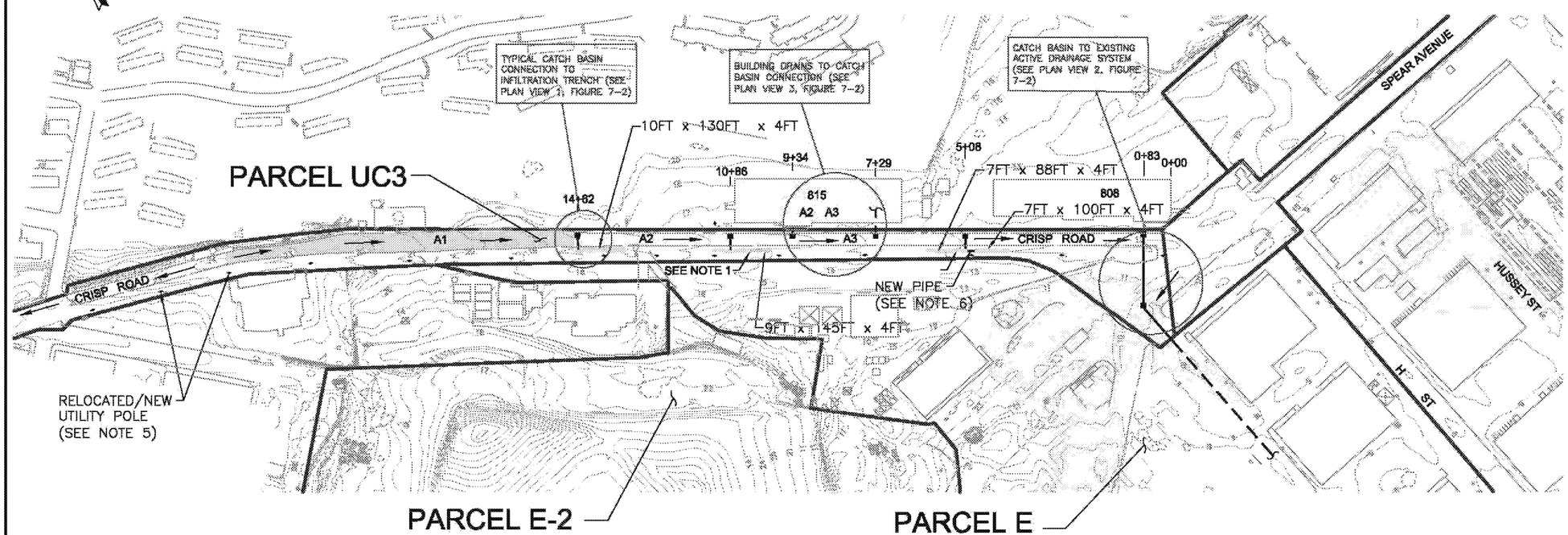

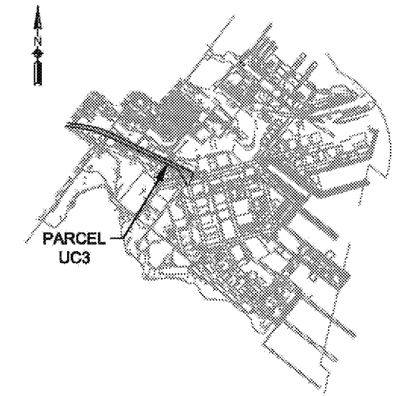

KEY PLAN

LEGEND

	PARCEL BOUNDARY
25	CONTOUR LINES WITH ELEVATION IN FEET RELATIVE TO VERTICAL DATUM NAV83
	EXISTING ACTIVE DRAINAGE LINE
	NEW PIPE
808	EXISTING BUILDING
■	NEW CATCH BASIN
⊸	NEW UTILITY POLE
10FT X 130FT X 4FT	INFILTRATION TRENCH (WIDTH, LENGTH, AND DEPTH IN FEET)
FT	FOOT
→	WATER FLOW LINE
	GROUNDWATER PLUMES
A1	DRAINAGE AREA 1 36,646 SQUARE FEET
A2	DRAINAGE AREA 2 34,731 SQUARE FEET
A3	DRAINAGE AREA 3 39,435 SQUARE FEET

NOTES:

1. FOUR INFILTRATION TRENCHES WERE BUILT TO DRAIN CRISP ROAD AND PART OF SAN FRANCISCO REDEVELOPMENT AGENCY (FORMERLY PARCEL A).
2. FIELD ENGINEER TO APPROVE INSTALLATIONS AND CONNECTIONS TO EXISTING/NEW DRAINAGE SYSTEM.
3. SEE FIGURE 7–2 FOR CATCH BASIN AND INFILTRATION TRENCH DETAILS.
4. THE INFILTRATION TRENCHES ARE LOCATED AT LEAST 8 FEET FROM THE UTILITY POLES.
5. UTILITY POLES WERE RELOCATED AWAY FROM EXCAVATION AREA ON CRISP ROAD AND AWAY FROM NEW INFILTRATION TRENCH BY PACIFIC GAS AND ELECTRIC (PG&E).
6. INFILTRATION TRENCH INSTALLED IN TWO SECTIONS (CONNECTED BY 12 INCH DIAMETER PIPE) TO PROTECT STABILITY OF UTILITY POLE.

150 0 150 300
(feet)

BASE REALIGNMENT AND CLOSURE
PROGRAM MANAGEMENT OFFICE WEST
SAN DIEGO, CALIFORNIA

PARCEL UC3 RADIOLOGICAL REMOVAL ACTION COMPLETION REPORT

FIGURE 7-1

INFILTRATION TRENCH AND CATCH BASIN LOCATIONS ON CRISP ROAD

HUNTERS POINT NAVAL SHIPYARD, SAN FRANCISCO, CA

REVISION:
AUTHOR: A.CRABTREE
DCN: EMAC–8823–0003–0106
FILE: SEE BELOW

TETRA TECH EC, INC.

\\Ecis143fs2\projects\CTO-03 CAD Files\DWG files\CTO 03 Crisp Road RACR_Figure 7-1_02-02-12.dwg

2/2/12

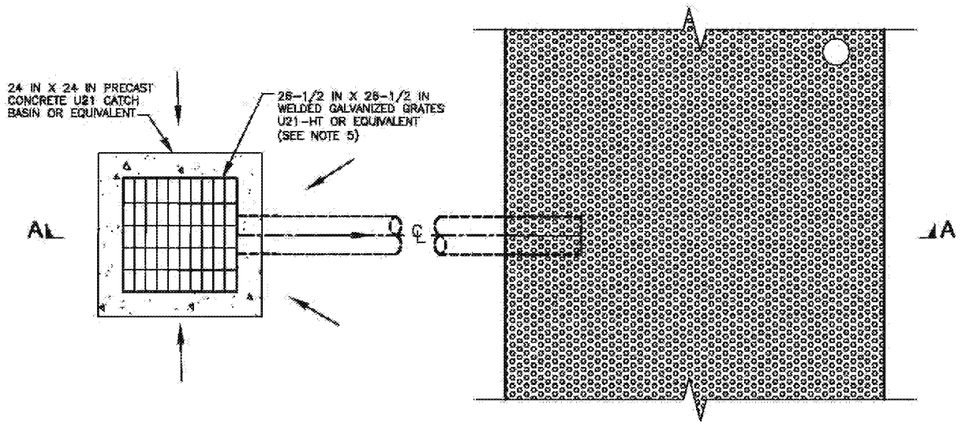

PLAN VIEW 1: CATCH BASIN CONNECTION TO INFILTRATION TRENCH
NTS

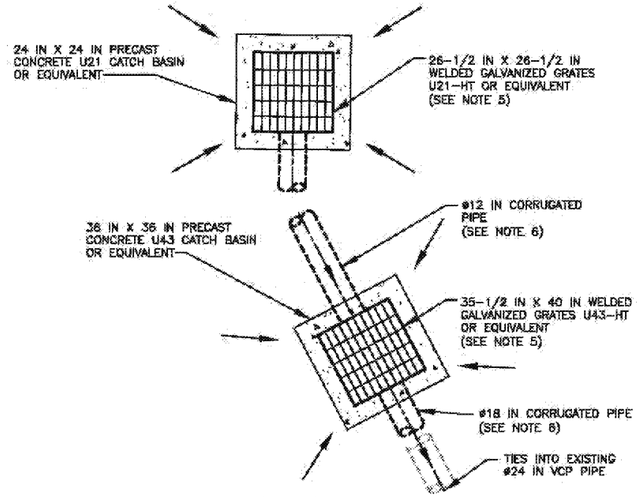

PLAN VIEW 2: CATCH BASIN TO EXISTING ACTIVE DRAINAGE SYSTEM
NTS

NOTES:

1. STORMWATER FLOW FROM PARCEL UC3 (CRISP ROAD) IS ROUTED TO NEW CATCH BASIN AND TIES INTO INFILTRATION TRENCHES AND PARCEL E DRAINAGE SYSTEM.
2. ALL WORK SHALL COMPLY WITH THE HUNTERS POINT SHIPYARD BASE-WIDE STORM DRAIN AND SANITARY SEWER REMOVAL PROJECT WORK PLAN (JULY 30, 2010) AND CRISP ROAD SANITARY SEWER AND STORM DRAIN REMOVAL EXECUTION PLAN (JANUARY 25, 2010) PREPARED BY TETRA TECH EC, INC. FIELD CHANGES, DESIGN CHANGES AND ANY DEVIATIONS SHALL BE APPROVED BY TETRA TECH EC, INC. ENGINEERING.
3. FIELD ENGINEER TO APPROVE FINAL INSTALLATIONS AND CONNECTIONS TO EXISTING/NEW DRAINAGE SYSTEM.
4. DEPTH OF CATCH BASINS WILL VARY BASED ON EXISTING TIE IN PIPES FROM SFRA PROPERTY.
5. ALL GRATES ARE RATED FOR H-20 TRAFFIC LOADING.
6. ALL PIPES ARE HDPE SMOOTH CORRUGATED WITH A MINIMUM SLOPE OF 0.10%.
7. THE LENGTH AND WIDTH OF THE INFILTRATION TRENCHES ARE SHOWN IN FIGURE 7-1.

LEGEND:

WATER FLOW DIRECTION

ø – DIAMETER
FT – FOOT
IN – INCH
HDPE – HIGH DENSITY POLYETHYLENE PIPE
MIN – MINIMUM
PVC – POLYVINYL CHLORIDE PIPE
VCP – VITREOUS CLAY PIPE

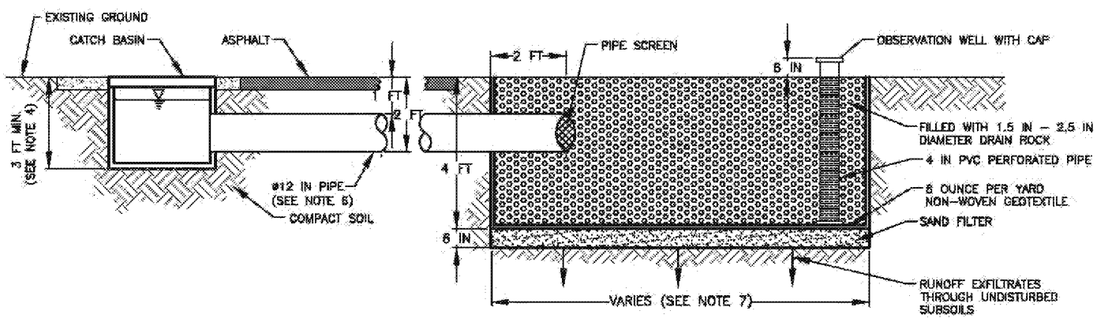

SECTION A-A
NTS

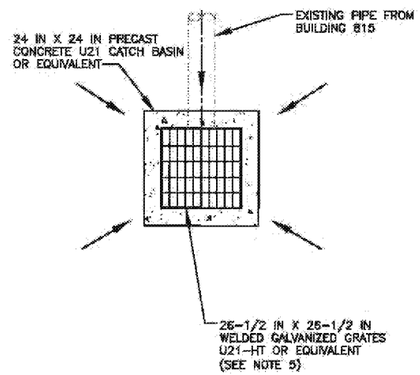

PLAN VIEW 3: BUILDING DRAINS TO CATCH BASIN CONNECTION
NTS

BASE REALIGNMENT AND CLOSURE
PROGRAM MANAGEMENT OFFICE WEST
SAN DIEGO, CALIFORNIA

PARCEL UC3 RADIOLOGICAL REMOVAL ACTION COMPLETION REPORT

FIGURE 7-2

CATCH BASIN AND INFILTRATION TRENCH DETAILS

HUNTERS POINT NAVAL SHIPYARD, SAN FRANCISCO, CA

REVISION:
AUTHOR: A.CRABTREE
DCN: EMAC-8823-0003-0106
FILE: SEE BELOW

TETRA TECH EC, INC.

PHOTOGRAPHS

This page intentionally left blank.

Photograph 1-1: Asphalt removal on Crisp Road prior to excavation of Parcel UC3 storm drain and sanitary sewer.

Photograph 1-2: Excavation of Trench Survey Unit 166.

Photograph 1-3: Excavation of pipe in trench segment 03-E16-00-1C on Crisp Road.

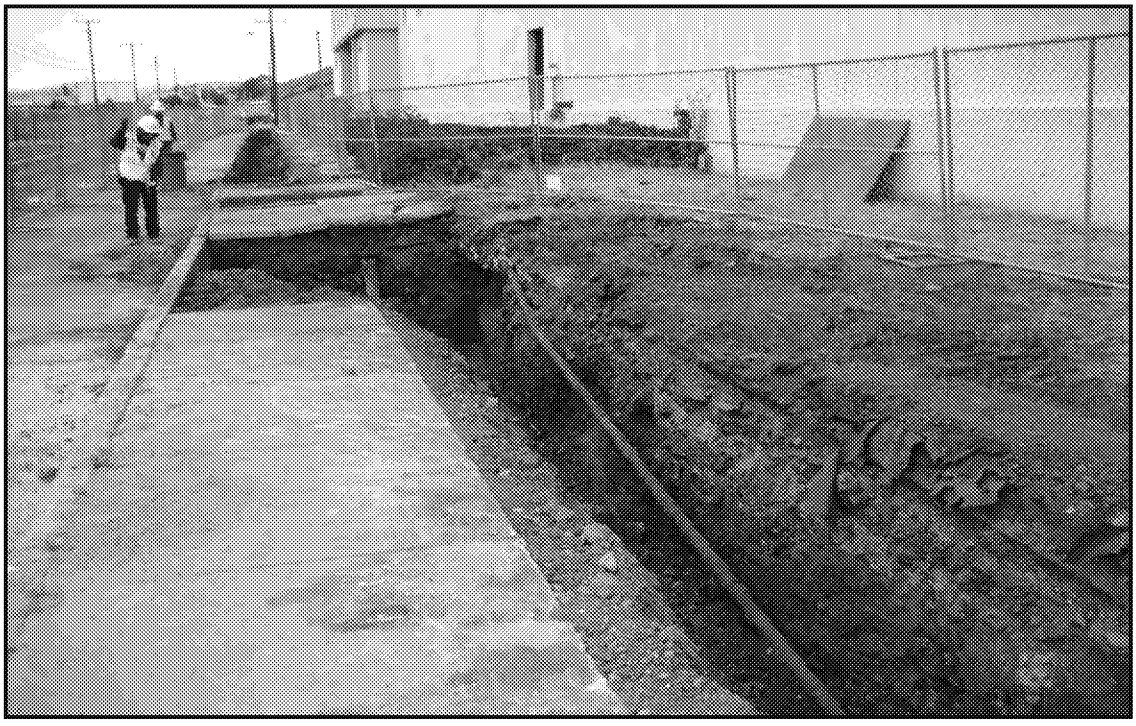

Photograph 1-4: Field Engineers mapping Trench Survey Unit 174.

Photograph 1-5: Back wall of Manhole MH502 left in place to avoid undermining retaining wall.

Photograph 1-6: Pipe sections removed from Trench Survey Unit 166 and staged on plastic pending further activities.

Photograph 1- 7: Excavation of Trench Survey Unit 172.

Photograph 1-8: Excavation of Trench Survey Unit 187.

APPENDIX A

FINAL SURVEY UNIT PROJECT REPORTS ABSTRACT (SUPRA)
(DCN: EMAC-8823-0003-0100.R3)
(on CD only)

This page intentionally left blank.

FINAL SURVEY UNIT PROJECT REPORTS ABSTRACT
REVISION 3
DCN: EMAC-8823-0003-0100.R3
Revision 3 to ECSD-RACIV-07-0207
July 7, 2011

NAVFAC Restoration Record Number
N00217-003550

DEPARTMENT OF THE NAVY
BASE REALIGNMENT AND CLOSURE
PROGRAM MANAGEMENT OFFICE WEST
1455 FRAZEE RD, SUITE 900
SAN DIEGO, CA 92108-4310

Ser BPMOW.cny/0706
JUL 7 2011

Mr. Mark Ripperda (SFD 8-1)
U.S. Environmental Protection Agency, Region IX
75 Hawthorne Street
San Francisco, CA 94105-3901

Mr. Larry Morgan
California Department of Public Health
1616 Capitol Avenue, MS 7405
P.O. Box 997377
Sacramento, CA 95899-7377

Dear Regulatory Team Members:

Enclosed please find the Final Survey Units Project Reports Abstract, Revision 3 (SUPRA), Sanitary Sewer and Storm Drain Removal Project, Hunters Point Shipyard, San Francisco, California. This revision to the SUPRA is a result of a Survey Unit Project Report (SUPR) "prototype" that was agreed upon by the California Department of Public Health in August 2010. All SUPR reports dated after August 2010 incorporate the "prototype" changes, however, the SUPRA was never updated accordingly. The SUPRA is a reference document in the SUPR reports. This document is being submitted for your records only.

If you have any questions regarding the enclosed document, please contact Mr. Chris Yantos at (619) 532-0912, or Mr. Keith Forman at (619) 532-0913 at your earliest convenience.

Sincerely,

KEITH FORMAN
BRAC Environmental Coordinator
By direction of the Director

Enclosure: 1. Final, Survey Units Project Reports Abstract, Revision 3 Sanitary Sewer and Storm Drain Removal, Hunters Point Shipyard, San Francisco, California, July 2011.

Copy to:

Diane Silva (2 Hard Copies, 1 unbound, CD)
NAVFAC Southwest (Code EV33)
Naval Base San Diego
2965 Mole Rd., Bldg. 3519
San Diego, CA 92136

Laurie Lowman (3 Hard Copies and 3 CDs)
Building 1971
NWS P.O. Drawer 260
Yorktown, VA. 23691-0260

Amy Brownell (CD Only)
SF Department of Public Health
1390 Market St., Suite 210
San Francisco, Ca 94102

Elaine Warren (CD only)
Office of the City Attorney
City Hall, Room 234
1 Dr. Carlton B. Goodlett Place
San Francisco, CA 94102-4682

Leslie Lundgren (Hard Copy and CD)
33 New Montgomery Street, Suite 2000
San Francisco, CA 94105

Dorinda Shipman (Hard Copy and CD)
Treadwell and Rollo
555 Montgomery St., Suite 1300
San Francisco, CA 94111

Stephen Proud (CD Only)
Lennar/BVHP
1 California St., Suite 2700
San Francisco, CA 94111

Stan DeSouza (CD Only)
1680 Mission St., First Floor
San Francisco, CA 94103-2414

Karla Brasaemle (Hard Copy and CD)
90 New Montgomery St., Suite 710
San Francisco, CA 94105

Ryan Miya (Hard Copy and CD)
Department of Toxic Substance Control
700 Heinz Avenue, Bldg. F, Suite 200
Berkeley, CA 94710

Michael Sharpless (CD Only)
Paul Hastings, et al.
55 2nd Street, 24th Floor
San Francisco, CA 94104-2635

Tamara Davidson (CD Only)
SF Health Department
101 Grove Street, Rm 217
San Francisco, CA 94102

Janice Torbet (Hard Copy and CD)
100 Larkin Street
Gov. Information Ctr., 5th Floor
San Francisco, CA 94102

Linda Malvino (Hard Copy and CD)
Mactec Engineering and Consulting, Inc.
1465 North McDowell Blvd, Suite 200
Petaluma, CA 94954

Michael McGowan (CD only)
1331 Evans Avenue
San Francisco, CA 94124

Randy Brandt (CD Only)
1111 Broadway, 6th Floor
Oakland, CA 94607

ED_006787_00017608-00242

Base Realignment and Closure
Program Management Office West
1455 Frazee Road, Suite 900
San Diego, California 92108-4310

CONTRACT NO. N62473-08-D-8823
CTO NO. 0003

FINAL

SURVEY UNIT PROJECT REPORTS ABSTRACT
REVISION 3

July 7, 2011

DCN: EMAC-8823-0003-0100.R3
Revision 3 to ECSD-RACIV-07-0207

SANITARY SEWER AND STORM DRAIN REMOVAL PROJECT
HUNTERS POINT SHIPYARD
SAN FRANCISCO, CALIFORNIA

Base Realignment and Closure
Program Management Office West
1455 Frazee Road, Suite 900
San Diego, California 92108-4310

CONTRACT NO. N62473-08-D-8823
CTO NO. 0003

FINAL

SURVEY UNIT PROJECT REPORTS ABSTRACT

REVISION 3

July 7, 2011

SANITARY SEWER AND STORM DRAIN REMOVAL PROJECT
HUNTERS POINT SHIPYARD
SAN FRANCISCO, CALIFORNIA

DCN: EMAC-8823-0003-0100.R3
Revision 3 to ECSD-RACIV-07-0207

Prepared by:

TETRA TECH EC, INC.
1230 Columbia Street, Suite 750
San Diego, California 92101-8536

Daryl DeLong
Technical Lead

Bill Dougherty
Project Manager

Erik Abkemeier
Radiation Safety Officer

TABLE OF CONTENTS

PAGE

ABBREVIATIONS AND ACRONYMS v

1.0 INTRODUCTION 1-1
1.1 PURPOSE 1-1
1.2 BACKGROUND 1-1

2.0 RELEASE CRITERIA 2-1
2.1 RELEASE LIMITS 2-1
2.2 AS LOW AS REASONABLY ACHIEVABLE 2-1
2.3 ENVIRONMENTAL ALARA PROCESS 2-2
2.3.1 Identification of Potential Radiological Impacts 2-2
2.3.2 Review of Radiological Impacts 2-2
2.3.3 Performance of Qualitative ALARA Analyses 2-3
2.3.4 Performance of Quantitative ALARA Analyses 2-3
2.4 RADIONUCLIDES OF CONCERN 2-4
2.5 RELEASE CRITERIA FOR RADIONUCLIDES OF CONCERN 2-5
2.6 INVESTIGATION LEVEL FOR GAMMA SCAN SURVEYS 2-5

3.0 FINAL STATUS SURVEYS 3-1
3.1 OBJECTIVE OF THE FINAL STATUS SURVEYS 3-1
3.2 SURVEY UNITS 3-1
3.2.1 Trench Survey Units 3-1
3.2.2 Overburden Survey Units 3-2
3.2.3 Peripheral Soils 3-4
3.2.4 Excavated Soil Survey Units 3-4
3.2.5 Soil Scanning at the Radiological Screening Yard 3-4
3.2.6 Import Fill 3-7
3.3 REFERENCE AREA 3-7

4.0 LABORATORY ANALYSIS 4-1
4.1 SAMPLE PREPARATION 4-1
4.2 GAMMA SPECTROSCOPY ANALYSIS 4-1
4.3 GAMMA SPECTROSCOPY ANALYSIS FLAGS 4-2
4.4 QUALITY ASSURANCE GAMMA SPECTROSCOPY ANALYSIS 4-4
4.5 SELECTION OF THE OFF-SITE LABORATORY 4-4
4.5.1 Detection of Radium-226 at the On-Site Laboratory 4-4
4.5.2 Evaluation of Eberline Services 4-6
4.5.3 Initial Evaluation of TestAmerica 4-6
4.5.4 Selection of TestAmerica as the QA/QC Laboratory 4-7
4.6 LABORATORY COMPARISON 4-7
4.7 STRONTIUM-90 ANALYSIS 4-9
4.8 COUNTING UNCERTAINTY 4-9

TABLE OF CONTENTS
(Continued)

PAGE

4.9 DATA ASSESSMENT 4-11
4.9.1 Data Verification 4-12
4.9.2 Data Validation 4-12
4.9.3 Data Evaluation 4-12
4.9.4 Data Quality Assessment 4-12
4.9.5 Interim Data Quality Assessment 4-15
4.9.6 Ongoing Data Quality Assessment 4-19

5.0 STATISTICAL TESTS 5-1
5.1 DECISION ERRORS 5-1
5.2 COMPARATIVE DESCRIPTIVES TEST 5-2
5.3 WILCOXON RANK-SUM TEST 5-2
5.3.1 Determining the Numbers of Data Points for the WRS Test 5-2
5.3.2 Determining Data Points for Small Areas of Elevated Activity 5-4

6.0 DOSE MODELING 6-1

7.0 RECOMMENDATION OF FINAL UNRESTRICTED RELEASE 7-1

8.0 REFERENCES 8-1

TABLES

Table 2-1 Radionuclides of Concern 2-4

Table 2-2 Release Criteria 2-5

Table 3-1 Class 1 Soil Measurements – Import Fill 1 3-8

Table 3-2 Class 1 Soil Measurements – Import Fill 2 3-9

Table 3-3 Class 1 Soil Measurements – Background Reference Area 3-10

Table 4-1 Summary of Library for Gamma Spectroscopy Analysis at the On-Site Laboratory 4-3

Table 4-2 Comparison of On-Site Laboratory and NIST Traceable Radium-226 Standard Results 4-5

Table 4-3 Comparison of Eberline Services and NIST Traceable Radium-226 Standard Results 4-7

TABLE OF CONTENTS
(Continued)

PAGE

Table 4-4 Summary of NIST Traceable Radium-226 Standard Results 4-8

Table 4-5 Reference Area Laboratory Results Comparison (pCi/g) 4-9

Table 4-6 On-Site Laboratory Soil Measurements Uncertainty Estimate 4-11

Table 4-7 Eberline Services Laboratory Duplicate Results Comparison (pCi/g) 4-14

Table 4-8 TestAmerica Laboratory Duplicate Results Comparison (pCi/g) 4-15

Table 4-9 TestAmerica and Eberline Services, Laboratory Duplicate Results Comparison (pCi/g) 4-16

Table 4-10 TestAmerica and On-Site Laboratory, Laboratory Duplicate Results Comparison (pCi/g) 4-17

Table 4-11 TestAmerica and On-Site Laboratory, Second Sample Comparison 4-18

Table 4-12 TestAmerica and On-Site Laboratory, QA Analysis of HPS Lab Ra-226 and TA Bi-214 Results 4-19

Table 4-13 TestAmerica and On-Site Laboratory, QA of HPS Lab Ra-226 and TA Bi-214 Tuna Can Results 4-20

Table 4-14 TestAmerica and On-Site Laboratory, QA Analysis of TA Bi-214 and Bi-214 Tuna Can Results 4-21

FIGURES

Figure 3-1 Overburden Unit Sampling Diagram 3-3

Figure 3-2 Excavated Soil Unit Sampling Diagram 3-5

TABLE OF CONTENTS
(Continued)

ATTACHMENTS

Attachment 1	Import Fill Material Sample Results
Attachment 2	Reference Area Sample Results
Attachment 3	Radium-226 Standard Sample Results
Attachment 4	On-Site Laboratory Reports from Uncertainty Estimate Test
Attachment 5	Laboratory Duplicate Sample Results
Attachment 6	Off-Site Laboratory Sample Results
Attachment 7	Additional Laboratory Comparison Results
Attachment 8	Radium-226 and Bismuth-214 QA Comparison
Attachment 9	Off-Site Laboratory Standard Sample Result Using Bismuth-214

ABBREVIATIONS AND ACRONYMS

μR/h	microroentgen per hour
ALARA	as low as reasonably achievable
AM	Action Memorandum
^{214}Bi	bismuth-214
CDPH	California Department of Public Health
COC	chain of custody
cpm	counts per minute
^{137}Cs	cesium-137
CTO	contract task order
DON	Department of the Navy
DQA	data quality assessment
DQO	data quality objective
EPA	U.S. Environmental Protection Agency
ESU	excavated soil unit
FSS	Final Status Survey
GPS	global positioning system
HPGe	high-purity germanium
HPS	Hunters Point Shipyard
HRA	Historical Radiological Assessment
IQR	interquartile range
keV	kiloelectron volt
LBGR	lower boundary of the gray region
LLRW	low-level radioactive waste
LMI	Ludlum Measurements, Inc.
MARSSIM	Multi-Agency Radiation Survey and Site Investigation Manual
MCA	multi-channel analyzer
MDA	minimum detectable activity
NaI	sodium iodide
NIST	National Institute of Standards and Technology

ABBREVIATIONS AND ACRONYMS
(Continued)

NRC	Nuclear Regulatory Commission
^{214}Pb	lead-214
pCi/g	picocuries per gram
QA	quality assurance
QC	quality control
^{226}Ra	radium-226
RASO	Radiological Affairs Support Office
ROC	radionuclide of concern
RPD	relative percent difference
RSO	Radiation Safety Officer
RSY	Radiological Screening Yard
SAP	Sampling and Analysis Plan
SOP	standard operating procedure
^{90}Sr	strontium-90
SUPR	Survey Unit Project Report
^{235}U	uranium-235
VSP	Visual Sample Plan
WRS	Wilcoxon Rank-Sum

ED_006787_00017608-00250

1.0 INTRODUCTION

1.1 PURPOSE

This Survey Unit Project Reports (SUPRs) Abstract was prepared to document work conducted under the final Base-wide Storm Drain and Sanitary Sewer Removal Work Plan (TtEC 2006) and final Base-wide Storm Drain and Sanitary Sewer Removal Work Plan – Revision 4 (TtEC 2010) (Work Plan) at Hunters Point Shipyard (HPS), San Francisco, California. This Abstract summarizes the scope, approach, and radiological surveys used during removal of the sanitary sewer and storm drains located within HPS prior to December 31, 2010. This Abstract will be applicable to all associated SUPRs and data sets prepared for regulatory review unless otherwise noted.

The previous version of this document (revision 2 to the final) was prepared under Contract No. N68711-98-D-5713, Contract Task Order (CTO) No. 0072. This document (revision 3 to the final) was prepared under Contract No. N62473-08-D-8823, CTO No. 0003.

1.2 BACKGROUND

Based on the site's operational history described in the final Historical Radiological Assessment (HRA), Volume II (NAVSEA 2004) and site-specific investigative data, the Department of the Navy (DON) determined that the HPS sanitary sewer and storm drain systems contain radioactive contamination in soils and debris requiring a response action. This decision is documented in the final Base-wide Radiological Removal Action, Action Memorandum (AM) – Revision 2006 (DON 2006), which was created to implement the recommendations of the HRA.

HPS is a site where radioactive materials have been used or stored, where known spills, discharges, or other instances involving radioactive materials have occurred, and where radioactive materials might have been disposed of or buried. The sanitary sewer and storm drain systems have a potential for general radioactive material contamination based on the site operating history or known contamination detected during previous radiation surveys.

The DON initiated this removal action for the extraction of piping systems and soil containing radioactive contaminants that may be present in or around the sanitary sewer and storm drain systems. This removal action will serve to eliminate the potential threat posed by future migration and/or off-site release of radioactive material present at the site to the surrounding environment. Currently, such a release could occur as a result of wastewater or stormwater transport, erosion, weathering, seismic events, or biological activity.

The HRA (NAVSEA 2004) states that the present-day configuration of the sanitary sewer and storm drain systems is the result of an evolutionary process. This system was originally designed and built in the 1940s as a combined system, using the same conveyance piping and 40 separate discharge outfalls into San Francisco Bay.

This combined system grew in sections from the 1940s to its maximum size in 1958, when it underwent the first in a series of separation projects. The Building 819 pump station was constructed for conveyance of much of the sanitary sewage from HPS to the City of San Francisco treatment works, and separation of the systems took place in the industrial areas and the southwest area of HPS. Separation of the systems involved installation of dedicated sanitary sewer collection piping or diversion structures within the combined system piping that normally directed all combined flows through the Building 819 pump station. However, during storm events, stormwater flows would overwhelm Building 819, and much of the sewage and stormwater was diverted to various existing outfalls into the bay. Twenty-eight bay outfalls were converted to exclusive use for stormwater outlets, while 12 continued to serve as combined sanitary and stormwater sewer outlets.

A second segregation project, undertaken in 1973, provided some additional separation of the combined systems. The last of the separation projects performed in 1976 involved the installation of additional dedicated sanitary sewer piping. Complete separation of the combined systems was never achieved. Due to the evolutionary nature of the separation process, radiological contamination from the same source could have impacted the piping and other components of both systems.

2.0 RELEASE CRITERIA

2.1 RELEASE LIMITS

The DON is taking steps to ensure that residual radioactivity at an area will not result in individuals being exposed to unacceptable levels of radiation or radioactive materials. Regulatory agencies establish radiation dose standards based on risk considerations and scientific data relating dose to risk. Residual levels of radioactive material that correspond to allowable radiation dose standards are derived by analysis of various pathways and scenarios such as direct exposure, inhalation, and ingestion.

These levels, known as release limits, are presented in terms of soil activity concentration. Release limits usually refer to average levels of radiation or radioactivity above appropriate background levels. Release limits applicable to soil are expressed in units of activity concentration, picocuries per gram (pCi/g). The development of release limits is often an iterative process, where the release limits selected or developed are modified as additional site-specific information is obtained. The development of final cleanup levels was based on the Nuclear Regulatory Commission's (NRC's) screening levels, the U.S. Environmental Protection Agency's (EPA's) preliminary remediation goals, or agreements between the DON and regulatory agencies as documented in the AM.

2.2 AS LOW AS REASONABLY ACHIEVABLE

As low as reasonably achievable (ALARA) is a philosophy of striving for excellence in the practice of health physics and is an important aspect of radiation-safety regulations. The National Council on Radiation Protection and Measurements has stated, "ALARA is simply the continuation of good radiation-protection programs and practices which traditionally have been effective in keeping the average and individual exposures for monitored workers well below the limits" (NCRP 1993). The application of ALARA clearly includes the consideration of economic and social factors, and thus will inherently be different for different sources or facilities.

The ALARA concept is founded in the professional judgment of radiation-safety managers and personnel and is not, therefore, able to be used as a measure as to whether or not a particular radiation-safety program is adequate in comparison with other programs. Additionally, the ALARA concept does not provide a numerical limit below which the ALARA concept is achieved.

2.3 ENVIRONMENTAL ALARA PROCESS

This section describes the steps taken to implement the environmental ALARA policy:

1. Identification of Potential Radiological Impacts
2. Review of Radiological Impacts
3. Performance of Qualitative ALARA Analyses
4. Performance of Quantitative ALARA Analyses

2.3.1 Identification of Potential Radiological Impacts

Each new radiological operation is subjected to ALARA reviews before work begins to ensure that radiation exposures to workers, the public, and the environment meet ALARA principles. ALARA reviews are conducted for all operations, practices, and procedures that have potential for individual or collective doses to workers. Reviews culminate in changes or additions to work planning documents, standard operating procedures (SOPs), and radiological work permits.

These documents are used to identify activities that have potential for radiological environmental impacts and could require environmental ALARA analysis. If a radiological impact is identified that could impact the environment significantly, the Radiation Safety Officer (RSO) communicates the impact to the work staff and the Radiological Affairs Support Office (RASO).

2.3.2 Review of Radiological Impacts

Radiological impacts to the environment, workers, and the public from field operations are assessed for compliance with ALARA principles. Results from radiological survey activities, and air, soil, sediment, and water samples are used to assess the radiological impacts of HPS activities.

Determination of environmental radiological impacts from radiological activities is performed using nine methods: 1) air monitoring stations located around the excavation site perimeter to track radiological impacts; 2) field monitoring and sampling to identify areas requiring additional remediation; 3) remediation of contaminated areas at or above the release criteria; 4) control of radiologically impacted areas and work sites; 5) frisking of personnel and examining equipment leaving a radiologically controlled area; 6) use of release criteria that equate to dose and risk; 7) review of historical radiological operations to allow complete investigation of all areas of radiological concern; 8) complete characterization of radiologically impacted sites to ensure complete removal of radioactive material above the release criteria; and 9) dosimetry worn by personnel to measure time-averaged doses from gamma radiation.

2.3.3 Performance of Qualitative ALARA Analyses

Laboratory analyses are performed for 19 different isotopes to ensure that any possible radioactive contamination is identified. After each excavation is completed, the qualitative radiological impacts from operations are evaluated by performing a dose and risk assessment. The results of analysis and assessments are provided to the RASO and regulatory agencies for review.

2.3.4 Performance of Quantitative ALARA Analyses

Based on qualitative ALARA analyses, excavation projects that could cause a potential dose to the public are subjected to quantitative ALARA analyses using the steps described below.

Quantitative ALARA analyses include societal, technological, economic, and public policy considerations. In addition, these ALARA analyses consider NRC guidance for performing the following environmental ALARA assessments:

- Identification of possible radiation protection systems, such as alternative operating methods or controls, that are reasonably achievable. The options should range from the most rudimentary (base case) to the most technologically sophisticated systems.
- Quantification of exposures and doses to workers and the public in the vicinity of the work through air monitoring and dosimetry.
- Quantification of the economic factors, including the costs of purchasing, installing, operating, and maintaining the radiological equipment, and the potential health effects associated with the exposure of people and any other direct or indirect cost resulting from exposures to radiation during investigations and/or remediations.
- Identification and estimation of other health and non-health detriments and benefits, such as equipment loss and accidents.
- Evaluation of process alternatives using a quantitative cost-benefit analysis, when possible. When evaluations included assumptions, judgments, and limitations that could be quantified, and potential doses were well below the dose limit, qualitative analyses were used with full documentation.
- Implementation of the ALARA principles and monitoring of the results.

The following specific factors are used in performing a quantitative ALARA analysis:

- Dose to workers, the public, and the environment before and during work processes
- Residual dose to the local population
- Applicable alternative processes (treatments, operating methods, or controls) for site investigations or remediations

ED_006787_00017608-00255

- Costs for each alternative evaluated
- Societal and environmental (positive and negative) impacts associated with alternatives

Based on recent estimates of dose to the public from HPS operations, only qualitative ALARA analyses were required. Much of the data and analysis used for environmental ALARA evaluations is developed as part of the routine work processes.

To ensure that ALARA levels are met, removal actions conducted in accordance with the AM are designed to 1) substantially reduce ionizing radiation below cleanup goals and 2) eliminate identified pathways of exposure to ionizing radiation.

2.4 RADIONUCLIDES OF CONCERN

As listed in Table 3-1 of the Work Plan (TtEC 2008), the primary radionuclides of concern (ROCs) for most survey units were cesium-137 (^{137}Cs), radium-226 (^{226}Ra), and strontium-90 (^{90}Sr). Table 2-1 lists those ROCs. The principal types of radiation (alpha, beta, and gamma) and associated half-lives are also identified for measurement purposes.

TABLE 2-1

RADIONUCLIDES OF CONCERN

Radionuclide	Half-life	Radiations
Radium-226	1,600 years	Alpha (α)/gamma (γ)
Strontium-90	28.6 years	Beta (β^-)
Cesium-137	30.17 years	Beta/gamma (β^-,γ)

Exceptions to the ROCs will be individually noted in the specific SUPR, as necessary. One hundred percent of the samples collected were analyzed by gamma spectroscopy at the HPS on-site laboratory. Ten percent of the samples were also analyzed for ^{90}Sr.

The presence of ^{90}Sr would primarily be attributed to fission products associated with OPERATIONS CROSSROADS and decontamination of ships that participated in atomic weapons testing. Since ^{137}Cs would have also been present, any sample containing activity greater than the release criteria for ^{137}Cs will also be analyzed for ^{90}Sr.

2.5 RELEASE CRITERIA FOR RADIONUCLIDES OF CONCERN

Radionuclide-specific release criteria were obtained for each ROC using the criteria established by the NRC and EPA, as discussed in Section 2.1 above. The release criteria are shown in Table 2-2. Survey units for the sanitary sewer and storm drain removal project are considered acceptable when the radionuclide concentrations meet the soil release criteria defined in Table 2-2.

TABLE 2-2

RELEASE CRITERIA

Radionuclide	Soil			
	Outdoor Worker (pCi/g)	Residual Dose (mrem/yr)[a]	Residential (pCi/g)	Residual Dose (mrem/yr)[a]
Cesium-137	0.113	0.2142	0.113	0.2561
Radium-226	1.0[b]	6.342	1.0[b]	14.59
Strontium-90	10.8	0.1931	0.331	1.648

Notes:

[a] The resulting dose is based on modeling using RESRAD Version 6.3, with radon pathways turned off.
[b] Limit is 1 pCi/g above background, per agreement with EPA.

Abbreviations and Acronyms:

EPA – U.S. Environmental Protection Agency
mrem/yr – millirems per year
pCi/g – picocuries per gram

2.6 INVESTIGATION LEVEL FOR GAMMA SCAN SURVEYS

Investigation levels are specific levels of radioactivity used to indicate when additional investigation may be necessary. Investigation levels also serve as a quality control (QC) check. For example, in addition to indicating potential contamination, a measurement that exceeds the investigation level may have indicated a failing instrument.

When determining an investigation level using a statistical based parameter (for example, standard deviation), the following may be considered: survey objectives, underlying radionuclide distributions (normal, log-normal, nonparametric), data population descriptors (standard deviation, mean, median), and prior survey and historical information.

When an investigation level was exceeded, the measurement would have been confirmed to ensure that the initial measurement actually exceeds a particular investigation level.

This involved taking further measurements to confirm the initial result and, as appropriate, to quantify the area of elevated residual radioactivity.

The investigation level for gamma surveys was established as the reference area mean + 3 σ where σ is the standard deviation of the gamma readings in the reference area.

3.0 FINAL STATUS SURVEYS

The Multi-Agency Radiation Survey and Site Investigation Manual (MARSSIM) (NUREG-1575; DoD et al. 2000), the Nonparametric Statistical Methodology for the Design and Analysis of the Final Status Decommissioning Survey Guide (NUREG-1505; NRC 1998), and the Minimum Detectable Concentrations with Typical Radiation Survey Instruments for Various Contaminants and Field Conditions Guide (NUREG-1507; NRC 1997) were used as guidance in designing and conducting the Final Status Surveys (FSSs).

3.1 OBJECTIVE OF THE FINAL STATUS SURVEYS

The objective of the FSS was to demonstrate that identified residual radioactivity levels inside the excavated trench and subsequent overburden soils to be used as backfill met the release criteria. In demonstrating that this objective was met, the null hypothesis (H_o) was tested for residual contamination that exceeds the release criteria. The alternative hypothesis (H_a) was stated as residual contamination that meets the release criteria.

3.2 SURVEY UNITS

Sanitary sewer and storm drain systems were divided into manageable work areas, as designated in the specific design and work plans that are submitted for regulatory review. Smaller survey units were identified within each work area. There were three types of survey units: trench, overburden, and excavated soil. Trench survey units are survey units constructed by the surface area remaining as sanitary sewers and storm drain lines, as well as surrounding soil, are removed. An overburden survey unit is created by taking surrounding soil on the HPS site that is potentially used for fill material in a trench survey unit following its radiological release and placing it in 6-inch-thick "lifts" to be surveyed to verify its acceptability as fill material. Excavated soil survey units are created from the soil excavated during stormwater and sanitary sewer drain removal, so that the soil can be surveyed to determine its acceptability for use as fill material. Although the size of each survey unit may vary, each received the same scan survey and systematic sampling frequency.

3.2.1 Trench Survey Units

Scan surveys and systematic sampling were performed for each identified survey unit. Trench survey units varied in size but did not exceed 1,000 square meters in surface area. Systematically located post-excavation samples were collected after establishing a grid using Visual Sample Plan (VSP). Additional surveys may have been performed if the investigation levels were exceeded.

Accessible surface areas of each trench unit were scanned using Ludlum Model 44-10 2-inch by 2-inch sodium iodide (NaI) scintillation detectors coupled to Ludlum Model 2350-1 data loggers. The scan surveys were performed at a rate of approximately 0.08 meter per second with the detector held approximately 10 centimeters (4 inches) above the trench sidewalls and floor as appropriate. The detector was moved back and forth across the travel path while scanning, producing a serpentine scan pattern. Areas of elevated activity identified during the scan survey were investigated further. Trench unit scan survey data are provided as an attachment to each individual SUPR.

Each trench unit was mapped using computer-aided design technologies. First, the trench centerline was plotted, and then the extent of the trench excavation was drawn, with walls splayed out flat, into a two-dimensional plane. The design was then extracted into VSP to determine the locations of systematic sample points.

A minimum of 18 systematic sample locations, based on a random start point and the triangular grid pattern, were generated using VSP and are provided in each SUPR. Sample collection points were placed in the field using approved land surveying technologies and identified with the global positioning system (GPS).

3.2.2 Overburden Survey Units

During the course of excavation of Parcel B sanitary sewer and storm drain lines, the soils from excavations not in the immediate 1-foot vicinity of sewer or storm drain piping were removed to dewatering/screening pads located in the Radiological Screening Yard (RSY). Peripheral soils, as discussed in Section 3.2.3, may have also been added to the overburden unit. The soils were then spread out in lifts not to exceed 6 inches in thickness and 1,000 square meters in total surface area. Each of these areas was then assigned an incremental number and was identified as an overburden unit.

The gamma scan data for each overburden unit used as backfill will be presented as an attachment to each SUPR, as applicable.

The entire area of each overburden unit was plotted in VSP, and 18 systematic sampling locations were determined using a random start point on a triangular grid pattern. Typical systematic sampling locations used for each overburden unit are shown on Figure 3-1.

FIGURE 3-1

OVERBURDEN UNIT SAMPLING DIAGRAM

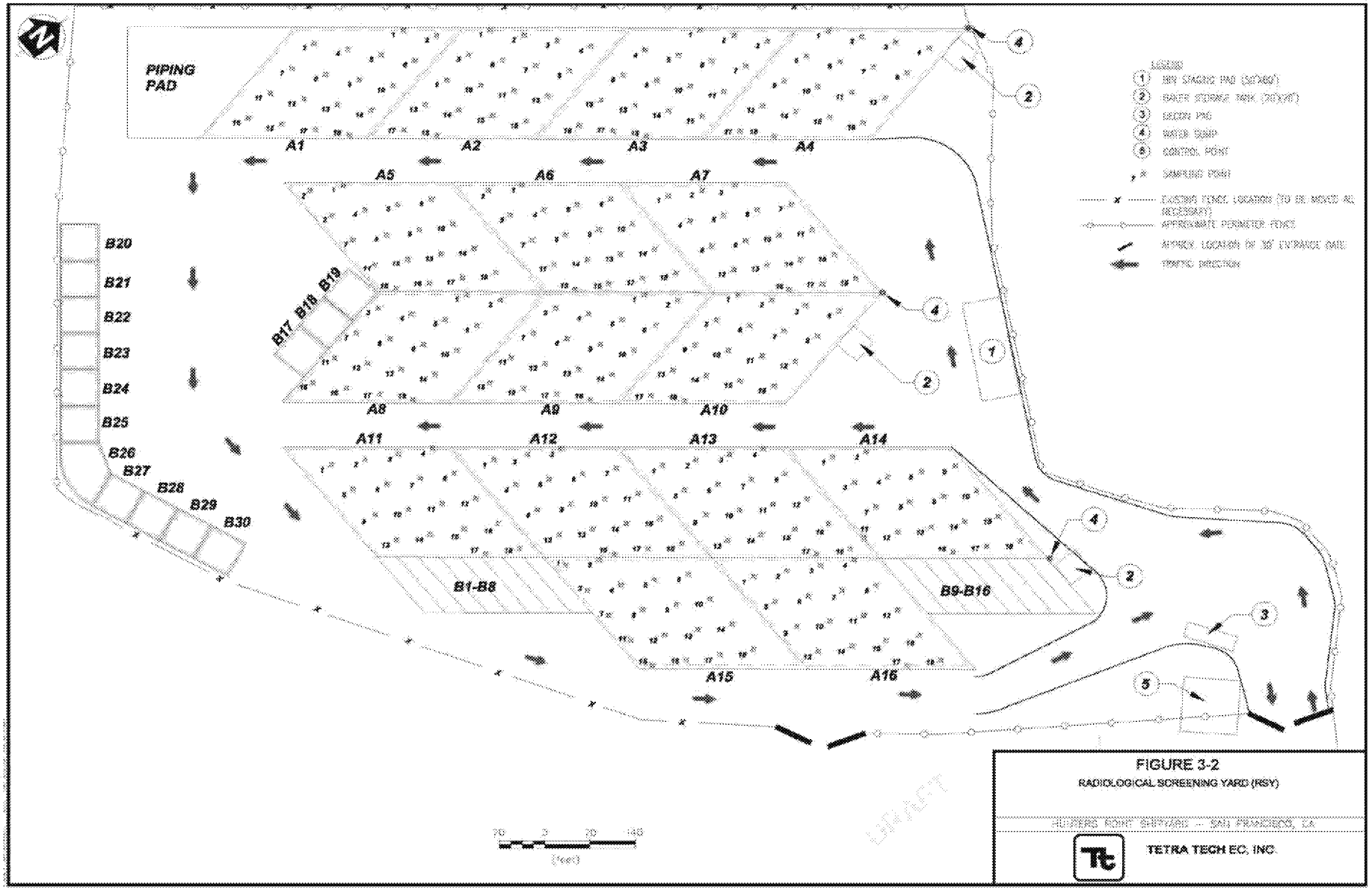

3.2.3 Peripheral Soils

Specific to Parcel B, peripheral soils (those within the 1-foot vicinity of sewer or storm drain piping) were stockpiled separately in approximately 12-cubic-yard piles on peripheral pads. Each 12-cubic-yard stockpile was hand-surveyed after spreading into lifts not to exceed 6 inches. These surveys were performed manually for gamma radiation as detailed in Section 3.2.1.

A minimum of two samples were taken from each 6-inch lift. The samples were collected at the location exhibiting the highest gamma radiation measurement. Additional samples were collected at locations where the investigation level was exceeded.

Once surveys and sampling of peripherals were completed, with specific concurrence from the TtEC RSO and the RASO, the soils were consolidated with other overburden stockpiles and screened as described in Section 3.2.2.

If a peripheral pile was identified as low-level radioactive waste (LLRW), it was disposed of and the trench segment where the peripheral soil originated was sampled in 3-foot intervals to identify the extent of trench contamination, if any.

For radiological release, a single survey unit was the sum of the trench unit that was excavated and the overburden unit(s) soils that were reused to backfill the trench. Each individual trench unit and overburden unit was systematically sampled independently. Maps detailing the general location of trench units are provided individually with each SUPR.

3.2.4 Excavated Soil Survey Units

During the course of excavation from Parcels C, D-1, D-2, E, E-2, G, and Utility Corridor sanitary sewer and storm drain lines, the soils from these excavations were removed to dewatering/screening pads located in the RSY. The soils were then spread out in lifts not to exceed 6 inches in thickness and 1,000 square meters in total surface area. Each of these areas was then assigned an incremental number and identified as an excavated soil unit (ESU).

The gamma scan data for each ESU are presented as an attachment to each SUPR, as applicable.

The entire area of each ESU was plotted in VSP, and 18 systematic sampling locations were determined using a random start point on a triangular grid pattern. Typical systematic sampling locations used for each ESU are shown on Figure 3-2. The final sampling locations of ESUs are provided in each SUPR, as applicable.

3.2.5 Soil Scanning at the Radiological Screening Yard

Each overburden unit or ESU was scanned using a towed array system. To date, there have been three such systems in use at HPS.

FIGURE 3-2
EXCAVATED SOIL UNIT SAMPLING DIAGRAM

The first of such system consisted of a Ludlum Model 4612 instrument that features a single channel analyzer assembly equipped with a programmable computer that streamlines all operation parameters. Four arrays of three Ludlum Model 44-10 scintillation detectors spaced 12 inches apart were connected to the Ludlum 4612. The Ludlum 4612 was connected to a GPS receiver, which was used to correlate logged data points to specific coordinates. This instrument array was positioned behind the back of a tow vehicle so as to "follow behind" the path of the vehicle. Survey lanes were approximately 1 meter wide.

The towed array mechanism logged measurements at a 6-second integrated count time every 4 feet with each detector elevated approximately 10 centimeters (4 inches) above the ground. The data were reviewed to determine if additional biased sampling would be necessary.

The second scanning system used a RSI-700 mobile radiation detection system that featured a multi-channel analyzer (MCA) gamma ray spectrometer controller equipped with two 4- by 4- by 16-inch NaI scintillation detectors. The RSI-700 system was designed to measure and record radiation measurements from a moving platform and incorporated a GPS receiver, which was used to correlate logged data points to specific coordinates. This instrument array was positioned behind the back of a tow vehicle so as to "follow behind" the path of the vehicle. Survey lanes were approximately 1 meter wide.

The two detectors were installed in series, to function as one 4- by 4- by 32-inch detector in the system software. The towed array mechanism logged measurements at a 1-second integrated count time every 0.5 meter with the detectors elevated approximately 10 cm above the ground. The data were reviewed to determine if additional biased sampling was necessary.

The system currently in use is the Drive Over Array M251. The M251 system is constructed with a 40- by 6- by 2-inch gamma scintillation detector provided by Ludlum Measurements, Inc. (LMI), coupled to an LMI Model 2350-1 Data Logger, with positioning provided by a Trimble® ProXT GPS. The system integrates both GPS and counts from the detector using Trimble's TerraSync system (via Bluetooth® technology). The M251 is designed to measure both gamma radiation and GPS accurately.

The GPS was selected based on the ability to reliably measure position within 1 meter (and typically within 30 centimeters). The detector was chosen to provide a wide angle of scan in a rugged and reliable package. Scan speeds of the system are limited to an average of 0.3 meter per second with a detector height of 10 centimeters, which are consistent with the detector height presented in NUREG-1507, and are slow enough to provide adequate data acquisition over each pad. The system was constructed on a portable trailer, coupled to a 20-horsepower John Deere tractor.

3.2.6 Import Fill

In June 2006, a local source of import fill material was found in the Millbrae, California, area. This soil was screened both chemically and radiologically before being delivered for use as residential fill material at HPS. This import fill material met the standards specified in Section 4.2 of the Sampling and Analysis Plan (SAP) (TtEC 2008), and approximately 12,000 cubic yards of the material was stockpiled at HPS.

In February 2007, another local source of import fill material was found in the Burlingame, California, area from the expansion of the Mills Hospital facility. This soil was screened both chemically and radiologically before being delivered for use as residential fill material at HPS. This import fill material met the standards specified in Section 4.2 of the SAP (TtEC 2008), and approximately 100,000 cubic yards of the material was stockpiled at HPS.

Eighteen random soil samples were collected from the import fill stockpile and the samples were analyzed by gamma spectroscopy. The results of the 18 random soil samples are used when performing dose modeling and statistical analysis when import fill material was used to backfill a trench. When import fill was used, the results from statistical tests based on these soil samples are included in lieu of overburden unit statistics provided in a SUPR.

The import fill material gamma spectroscopy and ^{90}Sr results are provided in Attachment 1. Table 3-1 provides a summary of the results of the import fill from the Millbrae source, and Table 3-2 provides a summary of the results of the import fill from the Burlingame source.

3.3 REFERENCE AREA

Reference area samples for the sanitary sewer and storm drain removal project were obtained in April 2006 in an area of the Building 813 parking lot in Parcel D-2. Building 813 was identified in the HRA as being impacted, but the parking lot area was not identified as being impacted, and is considered of like material to that encountered in the soils in survey units. Eighteen samples were collected systematically from this area for reference area purposes. All 18 samples were analyzed at the on-site laboratory by gamma spectroscopy. Ten percent of samples (two samples total) were also analyzed for ^{90}Sr at the on-site laboratory. The reference area samples provided a basis for net activity concentration. Background activity for ^{226}Ra was determined to be 0.485 pCi/g, placing the release criterion at 1.485 pCi/g of ^{226}Ra.

The reference area gamma spectroscopy and ^{90}Sr results are provided in Attachment 2. A summary of the results is provided in Table 3-3.

TABLE 3-1

Class 1 Soil Measurements - Import Fill 1

Sample No.	Date	Time	^{137}Cs	Flag	MDL	≥MDL	^{90}Sr	Flag	MDL	≥MDL	^{226}Ra	Flag	MDL	≥MDL
			Results (pCi/g)											
1	7/27/2006	13:00:00	0.018	A	0.036	0.036					0.094	A	0.758	0.758
2	7/27/2006	13:10:00	-0.032	#B	0.042	0.042					-0.278	#B	0.936	0.936
3	7/27/2006	13:20:00	-0.021	#B	0.048	0.048					-0.314	#B	0.816	0.816
4	7/27/2006	13:30:00	-0.025	#B	0.037	0.037					0.284	B	0.821	0.821
5	7/27/2006	13:40:00	0.033	A	0.035	0.035	0.041		0.049	0.049	0.816		0.777	0.816
6	7/27/2006	13:50:00	-0.042	#B	0.035	0.035					-0.948	#B	0.848	0.848
7	7/27/2006	14:00:00	-0.004	#B	0.039	0.039					-0.201	#B	0.814	0.814
8	7/27/2006	14:10:00	-0.039	#B	0.043	0.043					-0.224	#B	0.947	0.947
9	7/27/2006	14:20:00	0.009	A	0.044	0.044					0.683	A	0.926	0.926
10	7/27/2006	14:30:00	-0.027	#B	0.043	0.043					-1.084	#B	1.120	1.120
11	7/27/2006	14:40:00	-0.039	#B	0.043	0.043					0.634	A	0.874	0.874
12	7/27/2006	14:50:00	-0.045	#B	0.029	0.029	0.015		0.054	0.054	-0.426	#B	0.746	0.746
13	7/27/2006	15:00:00	0.006	A	0.032	0.032					0.533	A	0.561	0.561
14	7/27/2006	15:10:00	-0.028	#A	0.050	0.050					-1.297	#B	1.090	1.090
15	7/27/2006	15:20:00	-0.005	#B	0.049	0.049					0.681	A	1.050	1.050
16	7/27/2006	15:30:00	-0.035	#B	0.048	0.048					0.040	A	0.893	0.893
17	7/27/2006	15:40:00	-0.030	#A	0.047	0.047					-0.894	#B	1.060	1.060
18	7/27/2006	15:50:00	-0.008	#B	0.043	0.043					0.184	A	1.130	1.130
		mean				**0.041**				**0.052**				**0.900**
		std dev				**0.006**				**0.004**				**0.149**
		median				**0.043**				**0.052**				**0.884**

Notes:

Information concerning flags associated with the on-site laboratory data can be found in Section 4.3, and a discussion of uncertainty can be found in Section 4.8.

Abbreviations and Acronyms:

^{137}Cs – cesium-137
MDL – minimum detectable limit
pCi/g – picocuries per gram
^{226}Ra – radium-226
^{90}Sr – strontium-90
std dev – standard deviation

TABLE 3-2

Class 1 Soil Measurements - Import Fill 2

Sample No.	Date	Time	^{137}Cs	Flag	MDL	≥MDL	^{90}Sr	Flag	MDL	≥MDL	^{226}Ra	Flag	MDL	≥MDL
			Results (pCi/g)											
1	2/19/2007	7:30:00	0.062		0.036	0.062					0.028	A	1.070	1.070
2	2/19/2007	7:40:00	0.089	#	0.041	0.089					0.562	#A	1.080	1.080
3	2/19/2007	7:50:00	-0.060	#B	0.054	0.054					-0.513	#B	1.140	1.140
4	2/19/2007	8:00:00	-0.009	#B	0.050	0.050					1.022	B	1.350	1.350
5	2/19/2007	8:10:00	-0.024	#B	0.051	0.051					0.291	B	1.150	1.150
6	2/19/2007	8:20:00	-0.050	#B	0.061	0.061	-0.003		0.068	0.068	-0.012	#B	1.280	1.280
7	2/19/2007	8:30:00	-0.040	#B	0.044	0.044					1.005	F	0.959	1.005
8	2/19/2007	8:40:00	-0.057	#B	0.052	0.052					0.221	B	1.100	1.100
9	2/19/2007	8:50:00	0.038		0.019	0.038					-0.408	#B	0.881	0.881
10	2/19/2007	9:00:00	0.037	#	0.034	0.037					-0.498	#B	0.932	0.932
11	2/19/2007	9:10:00	-0.056	#B	0.055	0.055					-1.169	#B	0.971	0.971
12	2/19/2007	9:20:00	0.006	B	0.043	0.043					0.587	B	1.070	1.070
13	2/19/2007	9:30:00	-0.050	#B	0.040	0.040					-0.061	#B	0.842	0.842
14	2/19/2007	9:40:00	0.025	B	0.043	0.043					1.291		1.020	1.291
15	2/19/2007	9:50:00	0.007	B	0.058	0.058					-1.372	#B	1.190	1.190
16	2/19/2007	10:00:00	-0.004	#B	0.059	0.059	0.016		0.072	0.072	0.858	B	0.996	0.996
17	2/19/2007	10:10:00	0.027	B	0.052	0.052					-0.434	#B	1.120	1.120
18	2/19/2007	10:20:00	-0.072	#B	0.059	0.059					0.126	B	1.220	1.220
		mean				**0.053**				**0.070**				**1.094**
		std dev				**0.012**				**0.003**				**0.141**
		median				**0.052**				**0.070**				**1.090**

Notes:

Information concerning flags associated with the on-site laboratory data can be found in Section 4.3, and a discussion of uncertainty can be found in Section 4.8.

Abbreviations and Acronyms:

^{137}Cs – cesium-137
MDL – minimum detectable limit
pCi/g – picocuries per gram
^{226}Ra – radium-226
^{90}Sr – strontium-90
std dev – standard deviation

TABLE 3-3

Class 1 Soil Measurements - Background Reference Area

Sample No.	Date	Time	^{137}Cs	Flag	MDL	≥MDL	^{90}Sr	Flag	MDL	≥MDL	^{226}Ra	Flag	MDL	≥MDL
			Results (pCi/g)											
1	4/26/2006	12:00:00	-0.029	#B	0.038	0.038					0.202	A	0.700	0.700
2	4/26/2006	12:00:00	-0.063	#A	0.044	0.044					0.230	A	0.641	0.641
3	4/26/2006	12:00:00	-0.035	#B	0.036	0.036					0.219	A	0.633	0.633
4	4/26/2006	12:00:00	0.028	A	0.033	0.033					0.198	A	0.773	0.773
5	4/26/2006	12:00:00	-0.049	#A	0.042	0.042	-0.204		0.194	0.194	0.296	A	0.647	0.647
6	4/26/2006	12:00:00	-0.013	#B	0.036	0.036	-0.123		0.194	0.194	0.569	A	0.609	0.609
7	4/26/2006	12:00:00	0.057		0.033	0.057					0.767		0.669	0.767
8	4/26/2006	12:00:00	-0.079	#A	0.040	0.040					0.621		0.597	0.621
9	4/26/2006	12:00:00	-0.023	#B	0.039	0.039					0.233	A	0.633	0.633
10	4/26/2006	12:00:00	-0.020	#B	0.038	0.038					0.671	A	0.876	0.876
11	4/26/2006	12:00:00	-0.062	#A	0.042	0.042					1.228		0.621	1.228
12	4/26/2006	12:00:00	0.000	#B	0.041	0.041					0.548	A	0.570	0.570
13	4/26/2006	12:00:00	-0.072	#A	0.049	0.049					0.604	A	0.737	0.737
14	4/26/2006	12:00:00	0.002	A	0.040	0.040					0.400	A	0.807	0.807
15	4/26/2006	12:00:00	-0.035	#B	0.042	0.042					0.442	A	0.594	0.594
16	4/26/2006	12:00:00	-0.059	#A	0.045	0.045					0.224	A	0.777	0.777
17	4/26/2006	12:00:00	0.012	A	0.031	0.031					0.788		0.665	0.788
18	4/26/2006	12:00:00	0.021	A	0.033	0.033					0.482	A	0.580	0.580
		mean				**0.040**				**0.194**				**0.721**
		std dev				**0.006**				**0.000**				**0.155**
		median				**0.040**				**0.194**				**0.674**

Notes:

Information concerning flags associated with the on-site laboratory data can be found in Section 4.3, and a discussion of uncertainty can be found in Section 4.8.

Abbreviations and Acronyms:

^{137}Cs – cesium-137
MDL – minimum detectable limit
pCi/g – picocuries per gram
^{226}Ra – radium-226
^{90}Sr – strontium-90
std dev – standard deviation

4.0 LABORATORY ANALYSIS

4.1 SAMPLE PREPARATION

Samples for radiological analysis were collected in the field by trained and qualified radiological technicians. When soil samples were collected in the field, they were first processed through a colander apparatus to eliminate foreign objects and large debris. If the samples were acceptable for processing, an adequate amount of the sample was then placed into the geometry used by the on-site laboratory for analysis. However, if, in the opinion of the field technician, the sample was saturated beyond 10 percent moisture content by weight (as may be indicated by a failure to pass material through the colander apparatus), then approximately four times the amount of sample needed for analysis was placed into a ZipLoc® bag for subsequent drying by laboratory personnel.

The field technician who collected the sample turned the samples over to the on-site laboratory using the chain-of-custody (COC) procedure described in the SAP (TtEC 2008). Each sample is verified to contain identical information on the sample container and the associated COC form when received at the laboratory.

Once the samples were received by the on-site laboratory, each sample was verified to contain less than 10 percent moisture content by weight when massed. Samples with moisture in excess of the 10 percent limit were dried in a laboratory oven. Once the moisture content was determined to be less than 10 percent, the sample was passed through consecutively smaller sieves, ending at a number 40, to screen for any foreign materials that may have been present. An aliquot of the remaining materials was then placed into the geometry necessary for analysis by the laboratory team.

The area where samples were received and staged for analysis is a secured area with access restricted to laboratory team members or their immediate supervisors.

4.2 GAMMA SPECTROSCOPY ANALYSIS

Gamma spectroscopy analysis was performed using EG&G ORTEC® detector systems equipped with beryllium end caps (windows), which allowed for enhanced quantification of low-energy gammas (such as ^{226}Ra). Hardware features included a high-purity germanium (HPGe) gamma photon detector supported by an MCA and analysis software. Instrument hardware was calibrated using a multi-energy National Institute of Standards and Technology (NIST)-traceable source ranging from 50 kiloelectron volts (keV) to 2.6 mega electron volts. All results were reported in pCi/g. The Laboratory Manager reviewed all data results, including energy spectrums, for quality assurance (QA) and to verify count integration, efficiency, and

background corrections, as well as the identification of overlapping peaks. If there was any question on the analysis results, the sample was counted for a longer interval.

Additional reviews consisted of ensuring that 100 percent of the data complies with the method- and project-specific requirements as outlined in the SAP (TtEC 2008). QA data reviews included checking for compliance with the required QC practices, SOPs, and method and project requirements.

Compilations of statistical summary tables were reviewed and checked for trends prior to presenting the data to the RASO for final concurrence. The RASO then reviewed the data prior to concurring on release of material, backfilling of trenches, or disposal as LLRW.

A summary of typical library peaks used for identification may be seen in Table 4-1.

4.3 GAMMA SPECTROSCOPY ANALYSIS FLAGS

The gamma vision software produces a report once the analysis is complete. Each report is typically eight pages long, with a summary provided on the last page. The summary reports are then presented for each sample in the individual SUPR. The summary reports also identify flags (or symbols) that may be associated with each radionuclide, if appropriate. These flags and their associated meanings are presented below and do not necessarily specify that the data are not valid:

- **# – All peaks for activity calculation had bad shape.** The peak did not have a proper Poisson shape. These peaks are suspect, and the activity was calculated using a Simpson's Rule type of approximation.
- *** – Activity omitted from total.** The total activity is the scaled sum of the decay-corrected activity, if present, or the time-of-count activity. If the total activity was reported with a * symbol, this will indicate that the activity reported for some of the nuclides was not included in the total activity of the sample. The two instances in which a sample will report a total activity with a * symbol are discussed below.
- **& – Activity omitted from total and all peaks had bad shape.** This flag is used when the nuclide was not found and the peak did not have a proper Poisson shape. In short, the & symbol is used instead of two separate flags (< and # symbols). Nuclides identified with a & symbol are not included in the total activity of the sample.
- **< – MDA value printed.** If the nuclide was not found, the minimum detectable activity (MDA) value was printed with a < symbol after the nuclide name, and no uncertainty is reported. Nuclides identified with a < symbol are not included in the total activity.
- **A – Activity printed, but activity < MDA.** The activity calculation performed on the peaks for the isotope of concern yields a lower value than the calculation for the MDA. This identifies that a calculation was performed and the peaks were found, but the resulting activity was lower than the MDA.

TABLE 4-1

SUMMARY OF LIBRARY FOR GAMMA SPECTROSCOPY ANALYSIS AT THE ON-SITE LABORATORY

Nuclide	Energy	Percent	Half-life		Nuclide	Energy	Percent	Half-life		Nuclide	Energy	Percent	Half-life	
Ac-228	338.40	12.01%	6.13	hr	Cs-137	661.66	84.62%	30.1	y	Pb-214	77.11	10.70%	26.8	min
Ac-228	463.00	4.40%	6.13	hr	Eu-152	121.78	29.24%	12.7	y	Pb-214	87.20	3.70%	26.8	min
Ac-228	794.95	4.25%	6.13	hr	Eu-152	344.30	27.00%	12.7	y	Pb-214	241.92	7.47%	26.8	min
Ac-228	911.07	29.00%	6.13	hr	Eu-152	411.09	2.26%	12.7	y	Pb-214	295.22	19.20%	26.8	min
Ac-228	968.90	17.46%	6.13	hr	Eu-152	778.90	12.99%	12.7	y	Pb-214	351.99	37.10%	26.8	min
Am-241	26.99	2.50%	433	Y	Eu-152	964.00	14.58%	12.7	y	Pb-214	785.95	1.09%	26.8	min
Am-241	59.54	36.30%	433	Y	Eu-152	1408.08	21.21%	12.7	y	Ra-226	186.20	3.28%	1600	y
Bi-212	727.17	11.80%	60.55	min	Eu-154	123.10	40.46%	8.5	y	Th-230	67.67	0.37%	7.54E+04	y
Bi-212	785.42	2.00%	60.55	min	Eu-154	723.30	19.70%	8.5	y	Th-230	143.87	0.05%	7.54E+04	y
Bi-212	1620.56	2.75%	60.55	min	Eu-154	1274.80	35.50%	8.5	y	Th-230	253.73	0.01%	7.54E+04	y
Bi-214	609.32	46.09%	19.9	min	K-40	1460.80	10.70%	1.28E+09	y	Th-234	63.29	4.84%	578.4	hr
Bi-214	665.45	1.56%	19.9	min	Pa-234	131.28	20.00%	6.7	hr	Th-234	92.80	2.77%	578.4	hr
Bi-214	768.36	4.89%	19.9	min	Pa-234	883.24	15.00%	6.7	hr	Tl-208	583.14	86.00%	3.1	min
Bi-214	934.05	3.17%	19.9	min	Pa-234	946.00	12.00%	6.7	hr	Tl-208	860.47	12.00%	3.1	min
Bi-214	1120.28	15.04%	19.9	min	Pb-210	46.54	4.25%	22.3	y	Tl-208	2614.47	100.00%	3.1	min
Bi-214	1377.65	4.02%	19.9	min	Pb-212	74.81	9.60%	10.64	hr	U-235	143.76	10.50%	3.80E+06	y
Bi-214	1407.98	2.48%	19.9	min	Pb-212	77.11	17.50%	10.64	hr	U-235	163.35	4.70%	3.80E+06	y
Bi-214	1509.19	2.19%	19.9	min	Pb-212	87.20	6.30%	10.64	hr	U-235	185.05	54.00%	3.80E+06	y
Bi-214	1764.51	15.92%	19.9	min	Pb-212	238.63	43.10%	10.64	hr					
Co-60	1173.23	99.86%	5.272	Y	Pb-212	300.09	3.27%	10.64	hr					
Co-60	1332.51	99.98%	5.272	Y										

Abbreviations and Acronyms:

Ac-228 – actinium-228
Am-241 – americium-241
Bi-212 – bismuth-212
Bi-214 – bismuth-214
Co-60 – cobalt-60
Cs-137 – cesium-137
Eu-152 – europium-152
Eu-154 – europium-154
hr – hour
K-40 – potassium-40
min – minute
Pa-234 – proactinium-234
Pb-210 – lead-210
Pb-212 – lead-212
Pb-214 – lead 214
Ra-226 – radium-226
Th-230 – thorium-230
Th-234 – thorium-234
Tl-208 – thallium-208
U-235 – uranium-235
Y – year

- **B – Activity < MDA and failed test.** The peak was not statistically differentiable from background, and the background value was considered valid—activities reported with these codes should only be considered as < MDA values.
- **C – Area < Critical level.** The area of the peak was determined not to be statistically significant. The peak is not statistically differentiable from background.
- **F – Failed fraction or key line test.** The most abundant peak for the particular isotope was not observed in the correct proportions relative to other peaks, either high or low. The activity was determined using the most conservative estimate relative to using either the primary peak only or the secondary peaks only.
- **H – Half-life limit exceeded.** This flag would only show up on an old sample or a laboratory calibration standard with radioisotopes that are short lived. The date the sample was collected or the calibration standard was made is input into the software program. If an isotope is identified that has exceeded 12 half-lives from the time of collection, this flag will show up for that isotope.

4.4 QUALITY ASSURANCE GAMMA SPECTROSCOPY ANALYSIS

Samples were selected for QA purposes to ensure that the data quality objectives (DQOs) established in the SAP (TtEC 2008) were being met by the on-site laboratory. As required by the SAP, a minimum of 10 percent of samples for each type of analysis were sent to the off-site laboratory for independent verification of results. QA sample selection criteria included:

- Ten percent of all samples across all projects
- Ten percent of samples used to recommend unrestricted release of a survey unit, namely samples associated with the FSS sampling event

Samples were selected based on indications of activity that are generally near the release criteria for the particular project. This objective ensured that the on-site laboratory met the DQOs specified.

Starting in July 2008, the independent cross reference QA analyses were performed by TestAmerica (formerly Severn-Trent Laboratories) in St. Louis, Missouri. TestAmerica is a National Voluntary Laboratory Accreditation Program and Utah certified laboratory.

4.5 SELECTION OF THE OFF-SITE LABORATORY

4.5.1 Detection of Radium-226 at the On-Site Laboratory

During the performance of gamma spectroscopy, ^{226}Ra activity can be quantified by two different methods. The method used by the DON was identification of the 186.2 keV energy peak, and the in-growth method is based on calculations from identification of the ^{226}Ra daughters, bismuth-214 (^{214}Bi) and lead-214 (^{214}Pb). The DON considers quantification of the

activity using the 186.2 keV peak to be a more cost-effective method and as reliable a means of analysis as the in-growth method.

Gamma spectroscopy at the on-site laboratory was performed using HPGe detectors with beryllium end caps using Gamma Vision software. These systems were able to achieve the minimum detection limits necessary to quantify ^{226}Ra activity using the 186.2 keV peak after analysis for 2,700 seconds (45 minutes). Upon completion of data acquisition, analysis software processed spectral regions of interest around specified energy ranges, which allowed for identification and quantification of the nuclides of potential concern and their associated progeny. In addition, analysis and review of the data addressed count integration, efficiency, and background corrections, and the processing of overlapping spectral peaks.

As part of the on-going internal QC of the on-site laboratory, the DON purchased a NIST-certified standard of ^{226}Ra from Eckert & Ziegler, Inc., in March 2008. The certified quantity of ^{226}Ra was 29.959 pCi/g (the lowest activity the vendor could certify without extraordinary effort), with a relative uncertainty of 3.3 percent. The standard was delivered in a container similar to that used at HPS with a density of about 1.6 grams per milliliter (equivalent to NUREG-1507 soil). The standard was analyzed by all gamma spectroscopy systems at HPS, and the results using the on-site method of detection of ^{226}Ra were within the relative uncertainty of the standard. The relative percent difference (RPD) between the certified activity and the activity reported from each detector ranged from 0.29 to 3.06. Table 4-2 summarizes the results and associated RPD.

TABLE 4-2

COMPARISON OF ON-SITE LABORATORY AND NIST TRACEABLE RADIUM-226 STANDARD RESULTS

NIST Traceable ^{226}Ra Standard (29.959 pCi/g)								
Count	Detector	1	2	3	4	5	6	7
1st Count Feb 08	Activity (pCi/g)	30.689	30.127	30.234	30.047	30.179	30.890	30.781
	RPD	2.41	0.56	0.91	0.29	0.73	3.06	2.71

Abbreviations and Acronyms:

NIST – National Institute of Standards and Technology
pCi/g – picocuries per gram
^{226}Ra – radium-226
RPD – relative percent difference

4.5.2 Evaluation of Eberline Services

Eberline Services used HPGe detectors with aluminum caps for performance of gamma spectroscopy activities associated with this project. The use of aluminum end caps decreases the ability of the system to differentiate the low-energy gamma rays produced by some radioisotopes. As a result, Eberline Services counted sewer project samples for 200 to 1,000 minutes in order to achieve the required reporting limits. Despite the longer count time, the equipment could not adequately differentiate between the 185.05 and 186.2 keV peaks associated with uranium-235 (^{235}U) and ^{226}Ra, respectively. Therefore, Eberline Services based ^{226}Ra activity on mathematical formulae (the alternate method), which used both ^{214}Bi and ^{214}Pb activity (assumed to be in secular equilibrium).

The DON sent the 30 pCi/g ^{226}Ra standard (discussed above) to Eberline Services as a "blind" (unknown to the laboratory) QC check. Eberline Services (using the in-growth method) reported ^{226}Ra activity at 11.7 pCi/g, about an RPD of 88 lower than certified value of the standard. Based on the low standard results and due to the questions concerning the validity of the Eberline QA analyses, the DON sent additional samples (slightly more than 10 percent) that were processed by Eberline Services to TestAmerica for follow-up QA checks to ensure the data received from Eberline Services were still valid. The selection of samples ensured that at least one sample from each trench unit where overburden material was used as backfill underwent additional QA.

Eberline Services returned the 30 pCi/g standard to the on-site laboratory. All available systems again analyzed the standard to determine the status of the standard. Again, all available gamma spectroscopy systems indicated activity within the reported tolerance of the standard. The RPD between the certified activity and the activity reported from each detector ranged from 0.34 to 2.35, with an RPD between the first and second count between 0.18 and 3.04. Table 4-3 summarizes the results and associated RPDs.

Note that the ^{226}Ra standard was not reanalyzed on the third gamma spectroscopy system because the detector was not available due to maintenance issues.

4.5.3 Initial Evaluation of TestAmerica

Gamma spectroscopy at the TestAmerica laboratory was performed using HPGe detectors with beryllium end caps using Gamma Vision software. TestAmerica based ^{226}Ra activity initially on mathematical formulae (the in-growth method), which used both ^{214}Bi and ^{214}Pb activity (assumed to be in secular equilibrium), but later switched to using the 186.2 keV peak at the request of the DON. The DON specifically chose to use TestAmerica due to the similarity of equipment, analysis engines, software, and price.

TABLE 4-3

COMPARISON OF EBERLINE SERVICES AND NIST TRACEABLE RADIUM-226 STANDARD RESULTS

NIST Traceable ^{226}Ra Standard (29.959 pCi/g)								
Count	Detector	1	2	3	4	5	6	7
2nd Count April 08	Activity (pCi/g)	29.825	30.072	N/A	30	29.276	30.670	30.420
	RPD	0.45	0.38	N/A	0.34	2.31	2.35	1.53
RPD Between 1st and 2nd Count		2.86	0.18	N/A	0.05	3.04	0.71	1.18

Abbreviations and Acronyms:

N/A – not available
NIST – National Institute of Standards and Technology
pCi/g – picocuries per gram
^{226}Ra – radium-226
RPD – relative percent difference

After receiving the 30 pCi/g ^{226}Ra standard (as discussed in Section 4.5.2) and reanalysis by the on-site laboratory, the 30 pCi/g standard was sent to TestAmerica for analysis. Results from this analysis (using the 186.2 keV method) was 29.93 pCi/g with an RPD of the certified value at 0.1.

The results of the standard analysis and resulting RPD from all laboratories are summarized in Table 4-4. Individual gamma spectroscopy reports, including the off-site laboratory result, can be found in Attachment 3.

4.5.4 Selection of TestAmerica as the QA/QC Laboratory

Based on the similarity of gamma spectroscopy systems between TestAmerica and the on-site laboratory, and the use of the direct measurement of ^{226}Ra at the 186.20 keV energy, the DON replaced Eberline Services with TestAmerica as the primary choice for QA/QC verification of the on-site laboratory. However, TestAmerica subsequently reverted to the in-growth method, which used both ^{214}Bi and ^{214}Pb activity (assumed to be in secular equilibrium) as described in Section 4.9.6.

4.6 LABORATORY COMPARISON

Data from the on-site and off-site gamma spectroscopy analysis were compared, and the acceptance criterion of RPD for each on-site and off-site laboratory pair was established at 30 in instances where both activities were reported above the quantification or reporting limit (with no associated disqualifying flags). When off-site laboratory results are less than the on-site

ED_006787_00017608-00275

TABLE 4-4

SUMMARY OF NIST TRACEABLE RADIUM-226 STANDARD RESULTS

NIST Traceable ^{226}Ra Standard (29.959 pCi/g)								
Count	Detector	1	2	3	4	5	6	7
1st Count Feb 08	Activity (pCi/g)	30.689	30.127	30.234	30.047	30.179	30.890	30.781
	RPD	2.41	0.56	0.91	0.29	0.73	3.06	2.71
Eberline Services	Activity (pCi/g)	11.70						
	RPD	87.66						
TestAmerica Services	Activity (pCi/g)	29.93						
	RPD	0.10						
RPD On-site vs Eberline		89.59	88.11	88.40	87.90	88.25	90.12	89.83
RPD On-site vs TestAmerica		2.50	0.66	1.01	0.39	0.83	3.16	2.80

Abbreviations and Acronyms:

NIST – National Institute of Standards and Technology
pCi/g – picocuries per gram
^{226}Ra – radium-226
RPD – relative percent difference

laboratory results, an RPD greater than 30 will not be investigated since the on-site laboratory results are used for decision making and are biased high by design. Any off-site laboratory result greater than the on-site laboratory result with an RPD greater than 30 will require an investigation to resolve the discrepancy. Any subsequent actions, if necessary, are discussed in each individual SUPR.

For background measurements, different counting times and analysis processes were used, and there was not a direct correlation between the results from the on-site and off-site laboratory. However, the highest ^{226}Ra activity reported by the off-site laboratory was 0.307 pCi/g, which is well below the release criteria and well below the MDA for the same sample processed in the on-site laboratory. The Laboratory Manager and RSO compared analysis results to determine whether or not there could be any difference that would question the validity of the on-site laboratory data. The Laboratory Manager and the RSO concluded that the results were acceptable. A summary of the on-site and off-site (Eberline Services) laboratory results for the reference area samples is provided in Table 4-5.

ED_006787_00017608-00276

TABLE 4-5

Reference Area Laboratory Results Comparison (pCi/g)

Sample ID	On-site Laboratory						Off-site Laboratory (QA)					
	^{137}Cs			^{226}Ra			^{137}Cs			^{226}Ra		
	Activity	MDA	2σ Error	Activity	MDA	2σ Error	Activity	MDA	2σ Error	Activity	MDA	2σ Error
6NPBRAO-007	0.057	0.033	0.040	0.767	0.669	0.839	U	0.045	N/A	0.307	0.086	0.100
6NPBRAO-016	-0.059	0.045	-0.124	0.224	0.777	0.901	U	0.015	N/A	0.188	0.027	0.050

Abbreviations and Acronyms:

^{137}Cs – cesium-137
MDA – minimum detectable activity
N/A – 2 sigma error not reported since the activity was less than the MDA
pCi/g – picocuries per gram
QA – quality assurance
^{226}Ra – radium-226
U – activity not reported since it was less than MDA

4.7 STRONTIUM-90 ANALYSIS

The approved subcontractor procedure describes a method for separation and isotopic measurement of ^{90}Sr in various media through the use of a specialized cation resin. The extraction system in the proprietary specialized resin is 1.0 molar 4,4'(5')-di-t-butylcyclohexano 18-crown-6 (crown ether) in 1-octanol. A 40 percent loading of this organic solution is loaded onto an inert chromatographic support. The bed density of strontium resin is approximately 0.35 gram per milliliter. The radioactive ^{90}Sr is separated using the specialized resin prior to gas proportional counting. Small amounts of ^{90}Sr tracer are used to monitor method yields and correct results to improve precision and accuracy. Note that in some cases, ^{90}Sr is analyzed for "total Sr," which includes ^{89}Sr and ^{90}Sr. If this total Sr result is less than the ^{90}Sr release criterion, this result is conservatively reported at the ^{90}Sr result. However, if the total Sr result is larger than the ^{90}Sr result, the sample will be further analyzed using the ^{90}Sr sample analysis procedure described above.

The results of ^{90}Sr analysis were reported in pCi/g and are included as an attachment to each SUPR. Any sample exhibiting ^{137}Cs activity greater than the release criteria was also analyzed for ^{90}Sr.

A minimum of 10 percent of samples were randomly chosen for ^{90}Sr analysis at the on-site or off-site laboratory.

4.8 COUNTING UNCERTAINTY

Measurement of radioactivity has some degree of inherent uncertainty. The uncertainty quoted is the standard deviation of the average, obtained from the statistical uncertainties of the individual measurements. This uncertainty results from the combination of all possible inaccuracies in the

ED_006787_00017608-00277

measurement process, including such factors as the reading of the result, peak integration interpretation, peak background determination, the calibration of the measurement device, numerical rounding errors, and the random nature of radioactivity. Individual radioactivity measurements are accompanied by a plus or minus (±) value, which is an uncertainty term known as either the two-sigma counting error or the total propagated analytical uncertainty.

An additional problem is that there is only a single low energy gamma associated with ^{226}Ra, and its comparison to the background continuum is the only method to quantify efficiency. This leads to a mathematical weakness for calculating uncertainties, and uncertainties will be calculated high when the activity is near background levels. Therefore, extra attention to background quantification and frequency is imperative.

Total propagated uncertainty includes both counting uncertainty and analytical uncertainty. Because measuring a radionuclide requires a process of counting random radioactive emissions from a sample, the counting uncertainty gives information on what the measurement might be if the same sample were counted again under identical conditions. The counting uncertainty implies that approximately 95 percent of the time, a recount of the same sample would give a value somewhere between the reported value minus the counting uncertainty and the reported value plus the counting uncertainty.

The uncertainty in the background is not as simple because the background is a calculated number. The background area uncertainty is the uncertainty in the channels used to calculate the end points of the background multiplied by the ratio of the number of channels in the peak to the number of channels used to calculate the background. For wide peaks and low counts per channel, there is high uncertainty in the calculated background.

To better understand the effect of background uncertainty coupled with the ^{226}Ra counting uncertainty, the on-site laboratory identified a sample that had ^{226}Ra activity present above the MDA but below the release criteria and performed an empirical test. The sample was analyzed ten different times on the same detector. Results of the analysis indicated that the average ^{226}Ra activity reported was 1.353 pCi/g with an average reported counting uncertainty of 1.170 pCi/g. However, the standard deviation of the ^{226}Ra activity was 0.034, while the standard deviation of the counting uncertainty was 0.054. These data tend to show that the real uncertainty for accuracy and reproducibility associated with the reported ^{226}Ra activity is quite low in comparison to the reported uncertainty. This information is summarized in Table 4-6. Individual laboratory data are provided in Attachment 4.

Values in the tables provided in the SUPR that are less than the counting uncertainty indicate that the reported result might have come from a sample with no radioactivity. Such values are considered below detection. Also note that each radioactive measurement has the random background radioactivity of the measuring instrument subtracted, and the uncertainty of this individual background measurement is also a part of the counting uncertainty. Therefore,

negative results and negative uncertainties are possible, especially when the sample has very little radioactivity.

TABLE 4-6

On-Site Laboratory Soil Measurements Uncertainty Estimate

Sample No.	Date	Time	^{226}Ra	MDA	Counting Uncertainty
1	7/21/2008	10:08:00	1.333	0.925	1.168
2	7/21/2008	10:08:00	1.390	1.030	1.238
3	7/21/2008	10:08:00	1.305	0.972	1.221
4	7/21/2008	10:08:00	1.416	0.945	1.133
5	7/21/2008	10:08:00	1.332	0.953	1.147
6	7/21/2008	10:08:00	1.320	1.040	1.264
7	7/21/2008	10:08:00	1.366	0.922	1.157
8	7/21/2008	10:08:00	1.339	0.886	1.104
9	7/21/2008	10:08:00	1.359	0.902	1.115
10	7/21/2008	10:08:00	1.368	0.969	1.150
		mean	**1.353**	**0.954**	**1.170**
		std dev	**0.034**	**0.051**	**0.054**
		median	**1.349**	**0.949**	**1.154**

Notes:

The unit of measure is pCi/g.

Abbreviations and Acronyms:

MDA – minimum detectable activity
pCi/g – picocuries per gram
^{226}Ra – radium-226
std dev – standard deviation

In some instances, results approach a "zero" relative to the background determined for each channel of the gamma spectroscopy system. Because of this, in a few instances, the counting statistics increase without bound as the limit approaches zero. While not desirable, with activities approaching indistinguishability from the background of the gamma spectroscopy system, the counting uncertainty approaches an unusually large activity.

4.9 DATA ASSESSMENT

Laboratory data were assessed to determine whether the objectives of the survey process were met. The assessment process consisted of four data phases: verification, validation, evaluation, and quality assessment. The assessment of HPS laboratory data ensured the objective of the survey, final unrestricted release, was met.

4.9.1 Data Verification

Data verification ensured that the requirements were implemented as prescribed. Data verification activities included inspections of the laboratory, verifying that documented QC checks were performed on laboratory equipment in accordance with the appropriate SOP, technical reviews of data, and audits as appropriate.

4.9.2 Data Validation

As stated in the SAP (TtEC 2008), there are no standards for data validation of radiological analyses. Therefore, guidance documents and modified functional guidelines were used in validation of radiological data. Data not meeting method and/or SAP specifications were flagged as estimated or rejected.

RPD requirements for the on-site laboratory are provided in Table A.7-3 of the SAP (TtEC 2008). In addition, Section 7.2.4.1 of the SAP states that results reported greater than the MDA were to be used for the assessment of the precision requirements. The laboratory duplicate selection process was designed to be "blind" so that the process also applies to results that were less than the MDA. Specific laboratory duplicates are provided in SUPRs. Discussions concerning the on-site laboratory duplicate will only be provided if an investigation was necessary due to the accuracy of the result.

4.9.3 Data Evaluation

On-site radiochemical and laboratory data were evaluated prior to submittal to the RASO. The evaluation of data was based on method requirements and results of QC checks, the level of contamination of method blanks and method spikes (as appropriate), and the overall indication of interference due to contamination. The data qualifiers, if used, were listed at the bottom of the data report. If the data were determined to be acceptable for use, no qualifiers appear. ^{90}Sr results that did not indicate activity did not use qualifiers.

4.9.4 Data Quality Assessment

Data quality assessment (DQA) is a scientific and statistical evaluation that indicates whether the data are of the right type, quality, and quantity to support their intended use. DQA provides the assessment needed to decide if the planning objectives were met. All data presented in the SUPRs were subject to the DQA process, and the data were determined suitable for use.

During the course of work, extensive DQA was performed for the samples collected and processed at the on-site laboratory. The DON, in a response to a specific request, analyzed additional duplicate pairs of samples that have indicated ^{226}Ra above the MDA to illustrate the on-site laboratory's precision. Results for these 32 duplicate pairs of different samples that indicated activity near the ^{226}Ra action level are provided in Attachment 5, along with a summary. These duplicate pairs were analyzed across all gamma spectroscopy systems, and the

data were previously provided to the State of California Department of Public Health (CDPH). All samples indicated ^{226}Ra RPD less than 30, with a maximum RPD of 18, indicating a very high level of precision at the on-site laboratory.

Additionally, 10 of the 32 duplicate samples were sent to the off-site laboratory (Eberline Services) for a comparison evaluation. A bias between methods or laboratories can be viable for comparison purposes, if it is a consistent bias. The typical approach is to construct a scatter plot for the results of the different methods or laboratories and fit the data to a function that can then be used for data comparison between methods or laboratories. However, in this case, some results, including some of the higher selected on-site laboratory duplicate sample results for ^{226}Ra, are below the reporting limit or are nondetect for the off-site laboratory, which has a much lower MDA. Essentially, this appears to show that the two laboratory-specific implementations of the chosen methods are not comparable, even when one attempts to take the relative bias into consideration.

Results of the sample comparison are summarized in Table 4-7. Off-site laboratory data are provided in Attachment 6.

Due to the large RPDs between the on-site laboratory and Eberline Services, the DON decided to send the 10 duplicate samples to another outside laboratory (TestAmerica) in an effort to validate the data set. TestAmerica, like Eberline Services, based ^{226}Ra activity on mathematical formulae that used ^{214}Bi activity (assumed to be in secular equilibrium). However, using the in-growth method, all results for ^{226}Ra were identified as having activity present above the MDA, and the RPD was at 86.85 or below for all samples results. This appears to show that the three laboratory-specific implementations of the chosen methods are somewhat comparable. As identified in Table 4-8, the RPD between the on-site laboratory results and results from TestAmerica after a 30-minute count time were in better agreement than the RPD between Eberline Services and the on-site laboratory results provided in Table 4-7.

To further assess the data quality, a comparison of the two off-site laboratories' methods of using the same process for estimating the ^{226}Ra activity based on the ^{214}Bi activity was performed. Results of the comparison, as identified in Table 4-9, showed that the RPD between the two off-site laboratories was from not applicable (for samples that were reported as a nondetect) to 93.02. This appears to show that the two off-site laboratory-specific implementations of the same method were less comparable than the on-site laboratory and TestAmerica results.

Results of the off-site laboratory sample comparison are summarized in Table 4-9.

Since the TestAmerica gamma spectroscopy systems were similar to the systems used at the on-site laboratory, the DON requested that TestAmerica reanalyze the duplicate samples using the 186.2 keV peak. TestAmerica was able to achieve the minimum detection limits necessary to

TABLE 4-7

Eberline Services
Laboratory Duplicate Results Comparison (pCi/g)

Sample ID	On-site Laboratory				Eberline Services					
	Count Time (seconds)	^{226}Ra			Count Time (minutes)	^{226}Ra			Relative Percent Difference	
		Activity	MDA	2σ Error		Activity	MDA	2σ Error	Onsite Lab	Onsite vs Offsite
6PBFS-055-105	2700	2.310	0.872	1.126	815	0.645	0.026	0.100	4.28	112.69
6PBFS-055-105dup		2.213	0.905	1.168						
6PBFS-055-109	2700	3.450	1.250	1.603	276	0.632	0.053	0.110	6.89	138.08
6PBFS-055-109dup		3.221	1.150	1.504						
6PBFS-055-110	2700	3.103	1.070	1.380	216	U	0.128	N/A	3.35	N/A
6PBFS-055-110dup		3.001	1.120	1.445						
70-PD-C0080-42	2700	2.687	0.929	1.282	231	0.387	0.080	0.120	18.30	149.65
70-PD-C0080-42dup		2.237	0.843	1.164						
70-PD-C0081-26	2700	2.463	0.968	1.236	921	0.608	0.036	0.100	10.54	120.79
70-PD-C0081-26dup		2.737	1.070	1.364						
70-PDT-085-30	2700	2.875	1.240	1.551	202	0.906	0.064	0.150	2.34	104.15
70-PDT-085-30dup		2.809	1.260	1.610						
70-PDT-085-31	2700	3.599	1.090	1.487	206	U	1.800	N/A	0.94	N/A
70-PDT-085-31dup		3.565	1.030	1.400		0.875	0.091	0.160		
70-PDT-085-33	5400	2.566	0.807	1.061	1016	0.862	0.037	0.140	3.70	99.42
70-PDT-085-33dup		2.473	0.818	1.043						
70-PDT-086-33	2700	2.480	1.000	1.316	1015	U	0.058	N/A	4.56	N/A
70-PDT-086-33dup		2.370	0.929	1.253						
70-PDT-086-61	2700	2.608	1.110	1.403	1015	0.542	0.042	0.120	0.73	131.17
70-PDT-086-61dup		2.627	1.060	1.315						

Abbreviations and Acronyms:

MDA – minimum detectable activity
N/A – 2 sigma error not reported since the activity was less than MDA
pCi/g – picocuries per gram
^{226}Ra – radium-226
U – activity not reported since it was less than MDA

quantify ^{226}Ra activity using the 186.2 keV peak with an analysis time of no more than 2 hours. Results of the comparison, as identified in Table 4-10, showed that the RPD between the on-site and off-site laboratories using this method was between 0.08 and 36.64. This appears to show that the off-site laboratory-specific implementations of the same method were more comparable than the previous method discussed earlier.

Results of the sample comparison and associated RPD are summarized in Table 4-10.

TestAmerica began analysis to verify QA/QC for the on-site laboratory using the 186 keV method in the fall of 2008, with the initial results shown in Table 4-10. The second analyses confirmation package matched very well, with all but one RPD less than 30 as required by the SAP. The TestAmerica internal duplicate analyses also matched and met the RPD requirements. For all analyses where the on-site laboratory reported results less than the release criteria,

ED_006787_00017608-00282

TABLE 4-8

TestAmerica
Laboratory Duplicate Results Comparison (pCi/g)

Sample ID	On-site Laboratory				TestAmerica					
	Count Time (seconds)	^{226}Ra			Count Time (minutes)	^{226}Ra			Relative Percent Difference	
		Activity	MDA	2σ Error		Activity	MDA	2σ Error	Onsite Lab	Onsite vs Offsite
6PBFS-055-105	2700	2.310	0.872	1.126	30	1.050	0.140	0.200	4.28	75.00
6PBFS-055-105dup		2.213	0.905	1.168						
6PBFS-055-109	2700	3.450	1.250	1.603	30	1.640	0.120	0.250	6.89	71.13
6PBFS-055-109dup		3.221	1.150	1.504						
6PBFS-055-110	2700	3.103	1.070	1.380	30	1.540	0.160	0.280	3.35	67.32
6PBFS-055-110dup		3.001	1.120	1.445						
70-PD-C0080-42	2700	2.687	0.929	1.282	30	1.060	0.160	0.220	18.30	86.85
70-PD-C0080-42dup		2.237	0.843	1.164						
70-PD-C0081-26	2700	2.463	0.968	1.236	30	1.200	0.200	0.270	10.54	68.94
70-PD-C0081-26dup		2.737	1.070	1.364						
70-PDT-085-30	2700	2.875	1.240	1.551	30	1.710	0.110	0.250	2.34	50.82
70-PDT-085-30dup		2.809	1.260	1.610						
70-PDT-085-31	2700	3.599	1.090	1.487	30	1.620	0.210	0.310	0.94	75.84
70-PDT-085-31dup		3.565	1.030	1.400						
70-PDT-085-33	5400	2.566	0.807	1.061	30	1.880	0.160	0.300	3.70	30.86
70-PDT-085-33dup		2.473	0.818	1.043						
70-PDT-086-33	2700	2.480	1.000	1.316	30	1.470	0.120	0.250	4.56	51.15
70-PDT-086-33dup		2.370	0.929	1.253						
70-PDT-086-61	2700	2.608	1.110	1.403	30	1.340	0.140	0.240	0.73	64.23
70-PDT-086-61dup		2.627	1.060	1.315		1.110	0.180	0.200		

Abbreviations and Acronyms:

MDA – minimum detectable activity
N/A – 2 sigma error not reported since the activity was less than the MDA
pCi/g – picocuries per gram
^{226}Ra – radium-226

TestAmerica also reported results less than the release criteria, confirming that the on-site laboratory is reporting conservatively high as designed. Results of the second sample comparison and associated RPD are summarized in Table 4-11.

4.9.5 Interim Data Quality Assessment

Following the analysis of the initial two QA/QC confirmation packages, one sample from each Parcel B trench unit (62 in all) was sent to TestAmerica for analysis. Prior to receipt of those samples, TestAmerica installed a modified version of ORTEC Gammavision analysis software to further enhance their ability to analyze environmental levels of ^{226}Ra using the 186 keV method. The intent of the modification was to better identify and separate the conflicting peaks of ^{235}U at 185.7 keV and ^{226}Ra at 186.2 keV. The modified software did not produce the anticipated enhanced results. In fact, subsequent analyses following installation of the modified software showed a sporadic tendency to incorporate the natural ^{235}U contribution to the ^{226}Ra activity.

ED_006787_00017608-00283

TABLE 4-9

TestAmerica and Eberline Services
Laboratory Duplicate Results Comparison (pCi/g)

Sample ID	TestAmerica				Eberline Services				
	Count Time (minutes)	^{226}Ra			Count Time (minutes)	^{226}Ra			Relative Percent Difference
		Activity	MDA	2σ Error		Activity	MDA	2σ Error	
6PBFS-055-105	30	1.050	0.140	0.200	815	0.645	0.026	0.100	47.79
6PBFS-055-109	30	1.640	0.120	0.250	276	0.632	0.053	0.110	88.73
6PBFS-055-110	30	1.540	0.160	0.280	216	U	0.128	N/A	N/A
70-PD-C0080-42	30	1.060	0.160	0.220	231	0.387	0.080	0.120	93.02
70-PD-C0081-26	30	1.200	0.200	0.270	921	0.608	0.036	0.100	65.49
70-PDT-085-30	30	1.710	0.110	0.250	202	0.906	0.064	0.150	61.47
70-PDT-085-31	30	1.620	0.210	0.310	206	U	1.800	N/A	N/A
70-PDT-085-31dup						0.875	0.091	0.160	
70-PDT-085-33	30	1.880	0.160	0.300	1016	0.862	0.037	0.140	74.25
70-PDT-086-33	30	1.470	0.120	0.250	1015	U	0.058	N/A	N/A
70-PDT-086-61	30	1.340	0.140	0.240	1015	0.542	0.042	0.120	84.80
70-PDT-086-61dup		1.110	0.180	0.200					

Abbreviations and Acronyms:

MDA – minimum detectable activity
N/A – 2 sigma error not reported since the activity was less than the MDA
pCi/g – picocuries per gram
^{226}Ra – radium-226
U – activity not reported since it was less than MDA

This resulted in statistically significant variations from both the HPS laboratory results and with TestAmerica's in-house duplicate analysis. A summary of the sample comparison is provided in Attachment 7.

Review of data provided in Attachment 7 generally indicated that the off-site laboratory method using the 186 keV method for the ^{226}Ra gamma peak was biased high relative to and less reproducible than the on-site 186 keV method. This is likely due to interference from ^{235}U activity being less well accounted for or separated in the off-site method after recent analysis system changes at the off-site laboratory. This situation caused the DON to conduct additional investigations and to decide to use the in-growth method data from the off-site laboratory for comparison.

ED_006787_00017608-00284

TABLE 4-10

TestAmerica and On-Site Laboratory

Laboratory Duplicate Results Comparison (pCi/g)

Sample ID	On-site Laboratory				TestAmerica					
	Count Time (seconds)	^{226}Ra			Count Time (minutes)	^{226}Ra			Relative Percent Difference	
		Activity	MDA	2σ Error		Activity	MDA	2σ Error	Onsite Lab	Onsite vs Offsite
6PBFS-055-105	2700	2.310	0.872	1.126	60	2.500	1.600	1.200	4.28	7.90
6PBFS-055-105dup		2.213	0.905	1.168						
6PBFS-055-109	2700	3.450	1.250	1.603	60	2.500	1.800	1.200	6.89	31.94
6PBFS-055-109dup		3.221	1.150	1.504						
6PBFS-055-110	2700	3.103	1.070	1.380	60	2.500	1.400	1.000	3.35	21.51
6PBFS-055-110dup		3.001	1.120	1.445						
70-PD-C0080-42	2700	2.687	0.929	1.282	60	2.300	1.500	1.100	18.30	15.54
70-PD-C0080-42dup		2.237	0.843	1.164						
70-PD-C0081-26	2700	2.463	0.968	1.236	60	1.700	1.700	1.100	10.54	36.64
70-PD-C0081-26dup		2.737	1.070	1.364						
70-PDT-085-30	2700	2.875	1.240	1.551	60	2.400	2.100	1.400	2.34	18.01
70-PDT-085-30dup		2.809	1.260	1.610						
70-PDT-085-31	2700	3.599	1.090	1.487	60	3.100	1.900	1.400	0.94	14.89
70-PDT-085-31dup		3.565	1.030	1.400						
70-PDT-085-33	5400	2.566	0.807	1.061	60	3.000	2.200	1.500	3.70	15.59
70-PDT-085-33dup		2.473	0.818	1.043						
70-PDT-086-33	2700	2.480	1.000	1.316	120	2.120	1.100	0.800	4.56	15.67
70-PDT-086-33dup		2.370	0.929	1.253						
70-PDT-086-61	2700	2.608	1.110	1.403	120	2.610	1.300	0.980	0.73	0.08
70-PDT-086-61dup		2.627	1.060	1.315		2.300	1.200	0.870		

Abbreviations and Acronyms:

MDA – minimum detectable activity
N/A – 2 sigma error not reported since the activity was less than the MDA
pCi/g – picocuries per gram
^{226}Ra – radium-226

To ensure the in-growth method could be considered a viable comparison option, the DON requested that TestAmerica reanalyze the 30 pCi/g ^{226}Ra standard. Results from this analysis (using the in-growth method) was 25.9 pCi/g with an RPD of the certified value at 14.53. A summary of the sample comparison using the in-growth method is provided in Attachment 8. The laboratory report for the standard reanalysis is provided in Attachment 9.

Twelve of those samples were selected for further comparison and additional analyses by TestAmerica. A summary of the 12 sample results comparison is provided in Table 4-12.

All but 2 of the 12 sample results identified ^{214}Bi activity less than the ^{226}Ra activity reported by the on-site laboratory. In the case of the two off-site laboratory samples with ^{214}Bi activity greater than the on-site laboratory ^{226}Ra activity, the RPDs were well within 30.

ED_006787_00017608-00285

TABLE 4-11

TestAmerica and On-Site Laboratory Second Sample Comparison

Sample ID	On-site Laboratory			Off-site Laboratory			RPD
	^{226}Ra			^{226}Ra			
	Activity	MDA	2σ Error	Activity	MDA	2σ Error	^{226}Ra
6PBFS-031-03	-0.276	1.150	-1.774	0.880	0.670	0.450	
6PBFS-031-14	-0.133	0.837	-1.081	0.740	0.820	0.520	
6PBFS-032-04	0.610	1.030	1.212	1.140	0.820	0.550	
6PBFS-032-12	0.311	1.150	1.304	1.250	0.730	0.520	
6PBOPA07-011-141-08	1.124	1.010	1.186	0.120	0.740	0.420	
6PBOPA07-011-141-17	0.245	1.150	1.323	0.940	0.660	0.130	
6PBFS-034-03	-1.015	0.847	-2.500	0.000	0.700	3.100	
6PBFS-034-13	-0.469	0.852	-1.638	0.760	0.570	0.380	
6PBOPA01-009-136-03	-0.437	1.120	-1.782	0.920	0.760	0.500	
6PBOPA01-009-136-10	-0.970	1.180	-3.324	1.330	0.830	0.580	
6PBOPA16-008-137-03	-0.190	1.220	-1.607	0.000	0.560	0.150	
6PBOPA16-008-137-12	-0.713	0.877	-2.147	0.020	0.700	0.410	
6PBOPA03-011-144-02	0.396	0.738	0.825	0.800	0.780	0.510	
6PBOPA03-011-144-15	-1.120	0.905	-4.710	0.360	0.540	0.330	
6PBFS-035-117	3.195	1.050	1.298	4.400	1.300	1.200	31.74
6PBFS-035-126	0.310	1.130	1.306	0.750	0.600	0.400	
6PBFS-035-129	-0.926	1.160	-3.576	0.640	0.720	0.450	
6PBOPA03-011-144-02	0.396	0.738	0.825	0.800	0.780	0.510	
6PBOPA03-011-144-15	-1.120	0.905	-4.710	0.360	0.540	0.330	
6PBOPA02-009-172-10	1.282	0.954	1.132	1.100	0.790	0.530	15.29
6PBOPA02-009-172-18	1.386	0.943	1.130	1.240	0.770	0.540	11.14
6PBFS-038-02	0.936	1.070	1.272	1.230	0.760	0.530	
6PBFS-038-17	-0.296	1.120	-1.651	1.270	0.630	0.470	
6PBOPA02-009-172-10	1.282	0.954	1.132	1.100	0.790	0.530	15.29
6PBOPA02-009-172-18	1.386	0.943	1.130	1.240	0.770	0.540	11.14
6PBAB-116-04	0.223	1.080	1.233	0.970	0.800	0.530	
6PBAB-116-16	1.401	1.240	1.485	1.440	0.720	0.540	2.72
6PB142-SU1-024	-1.165	0.846	-6.127	0.290	0.650	0.390	
6PB142-SU1-031	-0.629	1.070	-2.115	0.290	0.540	0.320	
6PB142-SU2-020	-1.081	1.260	-4.036	0.510	0.600	0.370	
6PB142-SU2-032	-1.310	1.090	-6.495	0.000	0.590	0.200	
6PB142-SU3-027	-0.252	1.070	-1.493	0.000	1.000	0.580	
6PB142-SU3-044	-0.704	1.000	-2.392	0.000	0.660	0.390	
72-M-114-RA-04	1.383	0.930	1.109	1.060	0.760	0.520	26.43
72-M-114-RA-10	0.773	0.964	1.125	1.010	0.660	0.460	
72-M-114-01-003	0.545	1.330	1.525	0.140	0.710	0.410	
72-M-114-01-008	-0.939	1.100	-2.983	1.160	0.750	0.660	
72-M-114-02-001	-0.852	0.962	-2.173	0.600	0.650	0.410	
72-M-114-02-014	1.113	1.020	1.203	1.040	0.740	0.500	6.77

Notes:

The unit of measure is in pCi/g. Values in red exceed the release criteria for that radionuclide of concern.

Abbreviations and Acronyms:

MDA – minimum detectable activity
^{226}Ra – radium-226
pCi/g – picocuries per gram
RPD – relative percent difference

ED_006787_00017608-00286

TABLE 4-12

TestAmerica and On-Site Laboratory QA Analysis of HPS Lab Ra-226 and TA Bi-214 Results

Sample ID	On-site Laboratory				Original Container Off-site Laboratory (QA)				RPD
	Count Time (min)	^{226}Ra			Count Time (min)	^{214}Bi			
		Activity	MDA	2σ Error		Activity	MDL	2σ Error	
6PBFS-004-15	90	1.114	0.839	1.009	90	1.060	0.110	0.140	4.98
6PBFS-005-115	45	0.926	0.860	1.018	90	1.000	0.100	0.140	7.66
6PBFS-010-31	90	1.488	0.807	0.976	90	1.050	0.110	0.140	34.52
6PBFS-014-111	45	1.123	0.846	1.015	90	0.730	0.080	0.110	42.45
6PBFS-026-12	45	0.725	0.691	0.804	90	0.418	0.088	0.098	53.71
6PBFS-029-13	90	1.149	0.969	1.139	90	0.830	0.140	0.150	32.27
6PBFS-037-54	90	1.083	0.702	0.840	90	0.990	0.100	0.140	9.01
6PBFS-040-50	45	1.421	1.120	1.352	90	1.000	0.100	0.140	34.77
6PBFS-043-115	90	1.057	0.833	1.000	90	0.870	0.080	0.120	19.39
6PBFS-045-152	90	1.012	0.775	0.914	90	0.600	0.110	0.120	51.12
6PBFS-056-93	45	1.035	0.851	1.000	90	1.160	0.130	0.160	11.40
6PBFS-058-63	90	0.746	0.685	0.814	90	0.500	0.090	0.100	39.52

Notes:

The unit of measure is in pCi/g. Values in red exceed the release criteria for that radionuclide of concern.

Abbreviations and Acronyms:

^{214}Bi – bismuth-214
HPS – Hunters Point Shipyard
MDA – minimum detectable activity
MDL – method detection limit
min – minute
pCi/g – picocuries per gram
QA – quality assurance
^{226}Ra – radium-226
RPD – relative percent difference
TA – TestAmerica

4.9.6 Ongoing Data Quality Assessment

Currently, TestAmerica is performing QA/QC analysis using the in-growth method. This has resulted in significantly lower RPDs than occurred with comparison of analysis from the modified software using the 186 keV method. However, the RPDs are not as low as the original RPDs when TestAmerica was using the original software and performing the 186 keV method. These data were summarized and sent to the CDPH for review (provided in Attachments 7 and 8).

Based upon review of the in-growth method results by the CDPH, it was recommended to reanalyze a dozen samples after sealing them into the typical tuna cans used by the off-site laboratory given the difference in results seen between the on-site 186 keV results and the off-site in-growth results. This reanalysis occurred after the samples were placed in the standard off-site laboratory tuna can geometry, which were sealed according to the off-site laboratory

procedures and held for in-growth. The same 12 samples identified in Table 4-12 were used for this test so that additional comparisons could be made.

All but 2 of the 12 sample results identified ^{214}Bi activity less than the ^{226}Ra activity reported by the on-site laboratory. In the case of the two off-site laboratory samples with ^{214}Bi activity greater than the on-site laboratory ^{226}Ra activity, the RPDs were well within 30. Results of the analysis are provided in Table 4-13.

TABLE 4-13

TestAmerica and On-Site Laboratory QA of HPS Lab Ra-226 and TA Bi-214 Tuna Can Results

Sample ID	On-site Laboratory				Reprocessed Off-site Laboratory (Tuna Can)				RPD
	Count Time (min)	^{226}Ra			Count Time (min)	^{214}Bi			
		Activity	MDA	2σ Error		Activity	MDL	2σ Error	
6PBFS-004-15	90	1.114	0.839	1.009	60	0.870	0.090	0.220	24.61
6PBFS-005-115	45	0.926	0.860	1.018	60	0.640	0.070	0.150	36.55
6PBFS-010-31	90	1.488	0.807	0.976	60	1.200	0.070	0.200	21.44
6PBFS-014-111	45	1.123	0.846	1.015	60	0.570	0.060	0.150	65.36
6PBFS-026-12	45	0.725	0.691	0.804	60	0.380	0.060	0.120	62.44
6PBFS-029-13	90	1.149	0.969	1.139	60	1.160	0.070	0.210	0.92
6PBFS-037-54	90	1.083	0.702	0.840	60	0.910	0.060	0.170	17.40
6PBFS-040-50	45	1.421	1.120	1.352	60	0.890	0.070	0.170	45.95
6PBFS-043-115	90	1.057	0.833	1.000	60	0.630	0.080	0.190	50.60
6PBFS-045-152	90	1.012	0.775	0.914	60	0.730	0.090	0.210	32.38
6PBFS-056-93	45	1.035	0.851	1.000	60	1.240	0.070	0.200	18.03
6PBFS-058-63	90	0.746	0.685	0.814	60	0.420	0.060	0.110	55.95

Notes:

The unit of measure is pCi/g. Values in red exceed the release criteria for that radionuclide of concern.

Abbreviations and Acronyms:

^{214}Bi – bismuth-214
HPS – Hunters Point Shipyard
MDA – minimum detectable activity
MDL – method detection limit
min – minute
pCi/g – picocuries per gram
QA – quality assurance
^{226}Ra – radium-226
RPD – relative percent difference
TA – TestAmerica

A comparison of these 12 samples was made to identify how well the in-growth method could be performed using the on-site laboratory sample containers. All but three of the sample had RPDs within 30. Of the three sample results that did not have an RPD of less than or equal to 30,

only one of the tuna can results had slightly higher ^{214}Bi activity. Results of the analysis are provided in Table 4-14.

TABLE 4-14

TestAmerica and On-Site Laboratory QA Analysis of TA Bi-214 and Bi-214 Tuna Can Results

Sample ID	Original Off-site Laboratory (QA)				Reprocessed Off-site Laboratory (Tuna Can)				RPD
	Count Time (min)	^{214}Bi			Count Time (min)	^{214}Bi			
		Activity	MDA	2σ Error		Activity	MDL	2σ Error	
6PBFS-004-15	90	1.060	0.110	0.140	60	0.870	0.090	0.220	19.69
6PBFS-005-115	90	1.000	0.100	0.140	60	0.640	0.070	0.150	43.90
6PBFS-010-31	90	1.050	0.110	0.140	60	1.200	0.070	0.200	13.33
6PBFS-014-111	90	0.730	0.080	0.110	60	0.570	0.060	0.150	24.62
6PBFS-026-12	90	0.418	0.088	0.098	60	0.380	0.060	0.120	9.52
6PBFS-029-13	90	0.830	0.140	0.150	60	1.160	0.070	0.210	33.17
6PBFS-037-54	90	0.990	0.100	0.140	60	0.910	0.060	0.170	8.42
6PBFS-040-50	90	1.000	0.100	0.140	60	0.890	0.070	0.170	11.64
6PBFS-043-115	90	0.870	0.080	0.120	60	0.630	0.080	0.190	32.00
6PBFS-045-152	90	0.600	0.110	0.120	60	0.730	0.090	0.210	19.55
6PBFS-056-93	90	1.160	0.130	0.160	60	1.240	0.070	0.200	6.67
6PBFS-058-63	90	0.500	0.090	0.100	60	0.420	0.060	0.110	17.39

Notes:

The unit of measure is pCi/g.

Abbreviations and Acronyms:

^{214}Bi – bismuth-214
MDA – minimum detectable activity
MDL – method detection limit
min – minute
QA – quality assurance
^{226}Ra – radium-226
RPD – relative percent difference
TA – TestAmerica

The analytical comparison between counting geometries using the in-growth method has been completed. No significant high or low bias was noted when comparing TestAmerica's ^{226}Ra results using the tape-sealed plastic container versus the mechanically sealed tuna can. The RPDs were at approximately 30 percent or less with the exception of one sample with an RPD of 44, whose activity was well below the release criteria. The DON considers these results acceptable and concludes that the two counting geometries are comparable and either is valid to use for ^{226}Ra analysis using ^{214}Bi in-growth at the off-site QA laboratory.

ED_006787_00017608-00289

The on-site laboratory analysis of ^{226}Ra in soil using the 186 keV gamma is accurate but biased conservatively high. One source of the potential high bias is the inability to completely separate the ^{235}U 185.7 keV gamma ray from the ^{226}Ra 186.2 keV and over reporting the additional ^{235}U activity. The inability to separate the two gamma rays could also lead to a low bias if actual ^{226}Ra activity is attributed to the ^{235}U peak and subtracted out. The HPS on-site Laboratory Manager has made every effort to ensure that the potential low bias has been effectively eliminated by: 1) adding more channels per keV to better refine the ^{235}U and ^{226}Ra separation, 2) closely monitoring the spectra for any energy drift that could add bias, and 3) thoroughly characterizing each remediation location for the potential to contain ^{235}U activity.

Even though the potential for low bias has been minimized, the DON still chooses to make its remediation decisions based on either a Critical Level MDA calculation or the result itself, to ensure it errs to the conservative side. The decision to use the Critical Level calculation for the MDA also adds a high bias to the on-site ^{226}Ra activities. When the on-site ^{226}Ra 186 keV analysis is compared to ^{214}Bi in-growth analysis conducted by the off-site QA laboratory using either the plastic cup or the tuna can geometry, a slight high bias in activity exists for the 186 keV analysis. It should be noted that both the in-growth and the 186 keV analysis methodologies produce acceptable results when analyzing the known 30 pCi/g source. The high bias on-site when analyzing low activity samples is therefore, by design, due to conservatism and was anticipated.

5.0 STATISTICAL TESTS

Once the sample data were determined to be below the release criteria, two statistical tests were performed on the sample data: comparative descriptives and Wilcoxon Rank-Sum (WRS) tests. Statistical tests that are based on the assumption that observations of the sample data follow a known distribution are known as parametric tests. When the distributional assumptions can be met, the observations are measured on a continuous scale.

Conversely, statistical tests that make few or no assumptions about the distribution of the observations are known as distribution-free or nonparametric tests. Nonparametric tests are useful when the requirements of the parametric test cannot be met. For example, if observations were only measured on a categorical scale, the sample size may be too small, or other distributional assumptions may not be valid. In many situations, nonparametric tests are the only option, since most nonparametric tests do not have a parametric equivalent.

Statistical tests of radioanalytical results, where greater than 40 percent of the results are less than the MDA, are not valid. Because the vast majority of sample radioanalytical results were below the MDA, and all final status survey results were below the respective radionuclide-specific release criteria, statistical tests were not included in the SUPRs. However, the following sections describe the methodology for determining the required number of sampling points necessary for statistical testing of a survey unit as exceeding a release criterion.

5.1 DECISION ERRORS

There are two types of decision errors that were used when performing the statistical tests outlined in this SUPR Abstract. The first type of decision error, called a Type I error, occurs when the null hypothesis is rejected when it is actually true. This type of error is sometimes called a "false positive." The probability of a Type I error is denoted by an α. The Type I error is often referred to as the significance level or size of the test.

The second type of decision error, called a Type II error, occurs when the null hypothesis is not rejected when it is actually false. This type of error is sometimes called a "false negative." The probability of a Type II error is denoted by a β. The power of a statistical test is defined as the probability of rejecting the null hypothesis when it is actually false. It is numerically equal to $1-\beta$, where β is the Type II error rate.

Each survey was designed to limit Type I and Type II errors to a maximum probability of 5 percent. It was important to minimize the chances of concluding that a survey unit met the release criteria (reject the null hypothesis) when it actually exceeded the limits (Type I error),

ED_006787_00017608-00291

and concluding that a survey unit exceeded the release criteria (accept the null hypothesis) when it actually met the limits (Type II error).

5.2 COMPARATIVE DESCRIPTIVES TEST

Descriptive statistics illustrate the observations of one or more samples. The test compared the central location and distribution of many samples side by side, optionally split by the categories of a factor. The test included multiple box-plots and summary statistics. Summary statistics were presented for numeric evaluation with charts for visual assessment.

Parametric and nonparametric summary statistics are presented for each variable to indicate the central tendency and the scatter/dispersion of the observations. Vertical box-plots are shown side-by-side for easy comparison of differences between the variables.

A categorical scale variable was measured so the effect or influence on other variables was assessed.

Comparative descriptives show vertical box-plots for each sample, side by side for comparison. The blue line series indicate parametric statistics with the diamond identifying the mean and the requested confidence interval around the mean, while the notched line indicate the requested parametric percentile range. The notched box and whiskers show nonparametric statistics with the notched box identifying the median, lower and upper quartiles, and the confidence interval around the median, while the dotted line connects the nearest observations within 1.5 interquartile ranges (IQR) of the lower and upper quartiles. The + and ○ symbols indicate possible outliers that were observations more than 1.5 IQR (near outliers) and more than 3.0 IQR (far outliers) from the quartiles, respectively.

5.3 WILCOXON RANK-SUM TEST

The WRS test is designed to test a hypothesis about the location of a population distribution. It is most often used to test the hypothesis about a population median and often involves the use of matched pairs. For example, reference area and survey unit data were tested for a median difference of zero. This test is also a nonparametric test that may be used when it is only necessary, or possible, to know if observed differences between two conditions were significant. The WRS test is structured to denote change in magnitude, as opposed to any attempt at the quantitative measurement.

5.3.1 Determining the Numbers of Data Points for the WRS Test

Since the ROCs were present in background, N is calculated in the manner specified for the WRS test using Equation 5-1:

Equation 5-1

$$N = \left(\frac{\left(Z_{1-\alpha} + Z_{1-\beta}\right)^2}{3\left(P_r - 0.5\right)^2} \right)(1.2)$$

Where:

$Z_{1-\alpha}$ = 1.645 Type I decision error level
$Z_{1-\beta}$ = 1.645 Type II decision error level
P_r = 0.997658 random measurement probability
[from Table 5.1 in MARSSIM (NUREG-1575; DoD et al. 2000)]
(1.2) = 20% increase in number of samples over the minimum

The variable used to calculate N not already specified in the Work Plan (TtEC 2008) was the random measurement probability P_r. P_r in Equation 5-1 above is based on the relative shift. The relative shift is equal to Δ/σ, where Δ was equal to the release criterion minus the lower boundary of the gray region (LBGR), and σ was an estimate of the standard deviation of the measured values in a survey unit. The LBGR was the net median concentration of the contaminant in the survey unit. When this value was unknown, half the value of the release criterion was used as the LBGR, as suggested in MARSSIM (NUREG-1575; DoD et al. 2000). Likewise, σ was assigned the value of the standard deviation of the measurement values in the reference area.

Using Equation 5-2 below, the value for Δ was derived by converting the release criterion from pCi/g to counts per minute (cpm). To perform this conversion, an arbitrary concentration of ^{226}Ra is divided by the associated exposure rate produced by this concentration of ^{226}Ra. The resulting number was then divided by the average net cpm per microentgen per hour (µR/h) for the detectors on the towed array. Once this number was derived, the release criterion of 1.0 pCi/g for ^{226}Ra was divided by this number.

Equation 5-2

$$RC\,in\,cpm = \frac{RC}{AC/ER * 1/CR}$$

Where:

RC = release criterion (pCi/g)
AC = arbitrary concentration of ^{226}Ra (pCi/g)
ER = exposure rate for 1 pCi/g ^{226}Ra calculated by Microshield®
CR = counts per minute per µR/h for the detector

Where:

RC = 1.0
AC = 1
ER = 0.7384
CR = 900

The values used for these parameters to determine a P_r were 664 cpm for the release criterion. Taking half of this value, 332 cpm for Δ, and using 74.2 cpm for σ, N was calculated as nine samples when using Equation 5-1.

5.3.2 Determining Data Points for Small Areas of Elevated Activity

The statistical test described above evaluated whether or not the residual radioactivity in the survey unit exceeded the release criterion for contamination conditions that were approximately uniform across the survey unit. To obtain reasonable assurance that any small areas of elevated residual radioactivity were not missed during the survey, the total number of samples was increased. Equation 5-3 was used to determine the number of samples. The required number of samples n_{EA} was developed for an area of elevated activity based on a survey unit size of 1,000 square meters and a triangular grid with spacing, L, of 8 meters. Substituting these values into the following equation, n_{EA} was calculated to be 18.

Equation 5-3

$$L = \sqrt{\frac{A}{0.866\, n_{EA}}}$$

Where:

L = length of spacing (meters)
0.866 = factor presented in MARSSIM
A = surface area of the survey unit (1,000 square meters)
n_{EA} = number of samples

6.0 DOSE MODELING

The intent of a SUPR is to achieve unrestricted release for the associated survey unit. In doing so, the most conservative approach was used to model the area using the most current version of RESRAD. The default residential farmer scenario was used with only two minor changes: the actual surface area of the trench unit was used (in square meters) and the net concentrations above background were used (survey unit mean isotopic concentration minus background mean isotopic concentration).

In addition, modeling was performed using the mean concentrations of ^{137}Cs, ^{226}Ra (with the lead-210 daughter), and ^{90}Sr using the actual activity and substituting in the MDA value if the reported activity was less than the MDA. The activity used to model each radionuclide was based on the isotopic net concentration (survey unit mean isotopic concentration minus background mean isotopic concentration). No background is subtracted from the ^{137}Cs or ^{90}Sr values, as these radionuclides are not naturally occurring or expected at drain piping depths from global fallout from nuclear weapons testing.

The default parameters included external and inhalation exposures and exposure from the following ingestion pathways: drinking water, food grown with contaminated irrigation water, food grown on contaminated soil, fish, and inadvertent ingestion of soil. Land-based foods considered were leafy vegetables, root vegetables, fruit, grain, beef, poultry, milk, and eggs. Animal feeds included fresh forage, as well as stored grain, and hay. This was the most conservative scenario as it assumed that persons living on the site can use the land for any purpose without land use restrictions.

If none of the concentrations for the ROCs for the specific survey unit were greater than zero, the net dose and increased health risk for the survey unit were expected to be negligible, and no further modeling was determined to be reasonable or prudent.

The final dose and health risk modeling summary, if needed, will be included in each SUPR. Demonstration of both a net residual dose of less than 15 millirems per year and a net increased health risk of less than 3×10^{-4} to the average member of the critical group (or member of the public) will be considered sufficient for unrestricted release of the survey unit.

This page intentionally left blank.

7.0 RECOMMENDATION OF FINAL UNRESTRICTED RELEASE

A SUPR will be prepared for each survey unit with recommendations for free release. Each SUPR will provide general background information about the trench unit and associated overburden unit(s) or ESU(s) that are part of the survey unit package. Any exceptions to the ROC will be addressed in each SUPR.

A discussion of the FSS will include the activities performed for the trench unit and each overburden unit, ESU, or import fill that was used for backfill. The discussion will include results of the soil samples. Gamma scan data will be provided as attachments in each SUPR.

The version of RESRAD used and the results of the dose and risk modeling will be provided as an attachment and discussed in each SUPR.

This page intentionally left blank.

8.0 REFERENCES

DoD (Department of Defense), Department of Energy, Nuclear Regulatory Commission, and U.S. Environmental Protection Agency. 2000. Multi-Agency Radiation Survey and Site Investigation Manual (MARSSIM). NUREG-1575. August.

DON (Department of the Navy). 2006. Final Base-wide Radiological Removal Action, Action Memorandum – Revision 2006, Hunters Point Shipyard, San Francisco, California.

NAVSEA (Naval Sea Systems Command). 2004. Final Historical Radiological Assessment, Volume II.

NRC (Nuclear Regulatory Commission). 1998. Nonparametric Statistical Methodology for the Design and Analysis of the Final Status Decommissioning Survey Guide (NUREG)-1505).

——————. 1997. Minimum Detectable Concentrations with Typical Radiation Survey Instruments for Various Contaminants and Field Conditions Guide (NUREG-1507).

TtEC (Tetra Tech EC, Inc.). 2006. Final Base-wide Storm Drain and Sanitary Sewer Removal Work Plan, Hunters Point Shipyard, San Francisco, California.

——————. 2010. Final Project Work Plan, Revision 4. Base-wide Storm Drain and Sanitary Sewer Removal, Hunters Point Shipyard, San Francisco, California. June 30.

This page intentionally left blank.

ATTACHMENT 1

IMPORT FILL MATERIAL SAMPLE RESULTS

This page intentionally left blank.

ORTEC g v - i (3263) wan32 G53W2.03 27-JUL-2006 22:12:46 Page 1
New World Technology Spectrum name: 3N003301.An1

Sample description
Parcel B 6PBIF001-001 403g
7/27/06 13:00

Acquisition information
Start time: 27-Jul-2006 21:25:16
Live time: 2700
Real time: 2702

- -

***** S U M M A R Y O F N U C L I D E S I N S A M P L E *****

Nuclide		Activity picoCi/g	Time of Count Uncertainty picoCi/g	2 Sigma Total picoCi/g	MDA picoCi/g
Ac-228	#B	-6.8078E-02	-4.6390E-02	-4.6459E-02	0.202E+00
AM-241	#A	4.1666E-02	1.0775E-01	1.0776E-01	0.809E-01
Bi-212	F	4.6195E-01	3.0090E-01	3.0139E-01	0.187E+00
BI-214	F	3.2513E-01	1.6096E-01	1.6141E-01	0.105E+00
CO-60	#B	-7.1417E-03	-2.2420E-02	-2.2421E-02	0.245E-01
Cs-137	A	1.7828E-02	3.8166E-02	3.8172E-02	0.360E-01
EU-152	C	2.5108E-01	1.5638E-01	1.5666E-01	0.577E-01
EU-154	B	4.8473E-02	6.4945E-02	6.4970E-02	0.525E-01
K-40		8.5450E+00	1.4896E+00	1.5229E+00	0.102E+01
PA-234	#B	-7.8198E-02	4.5513E+02	4.5513E+02	0.127E+00
Pb-210	A	4.2247E-01	1.2874E+00	1.2875E+00	0.977E+00
PB-212		4.6587E-01	1.0497E-01	1.0638E-01	0.690E-01
PB-214		2.7873E-01	1.3471E-01	1.3511E-01	0.101E+00
RA-226	A	9.3770E-02	8.4801E-01	8.4802E-01	0.758E+00
Th-230	#B	-2.0672E+00	-1.4703E+01	-1.4704E+01	0.785E+01
TH-234	A	5.0775E-01	6.2926E-01	6.2954E-01	0.764E+00
Tl-208	B	8.6630E-02	4.2087E-02	4.2210E-02	0.113E+00
U-235	#B	-1.3852E-02	-9.9436E-02	-9.9437E-02	0.484E-01

- All peaks for activity calculation had bad shape.
* - Activity omitted from total
& - Activity omitted from total and all peaks had bad shape.
< - MDA value printed.
A - Activity printed, but activity < MDA.
B - Activity < MDA and failed test.
C - Area < Critical level.
F - Failed fraction or key line test.
H - Halflife limit exceeded

---------- S U M M A R Y ----------

Total Activity (41.7 to 2660.8 keV) 1.0076658E+01 picoCi/g

Laboratory: New World Technology

ORTEC g v - i (3263) wan32 G53W2.06 27-JUL-2006 22:40:35 Page 1
New World Technology Spectrum name: 5N000389.An1

Sample description
Parcel B 6PBIF001-002 408g
7/27/06 13:10

Acquisition information
Start time: 27-Jul-2006 21:55:26
Live time: 2700
Real time: 2703

- -

***** S U M M A R Y O F N U C L I D E S I N S A M P L E *****

Nuclide		Time of Count Activity pCi/g	Uncertainty Counting pCi/g	2 Sigma Total pCi/g	MDA pCi/g
Ac-228	F	1.8030E-01	1.9816E-01	1.9827E-01	0.178E+00
AM-241	#B	-7.6393E-02	-3.4829E-01	-3.4830E-01	0.972E-01
Bi-212	#F	7.4694E-01	3.8574E-01	3.8674E-01	0.178E+00
BI-214	F	3.1694E-01	1.2507E-01	1.2562E-01	0.969E-01
CO-60	#F	6.7710E-02	3.6213E-02	3.6300E-02	0.159E-01
CS-137	#B	-3.2019E-02	-2.2011E-01	-2.2012E-01	0.418E-01
EU-152	#B	8.1405E-02	7.8862E-02	7.8920E-02	0.869E-01
EU-154	F	1.2739E-01	7.8348E-02	7.8489E-02	0.495E-01
K-40		9.0457E+00	1.5648E+00	1.6002E+00	0.997E+00
Pa-234	B	1.1695E-02	1.2635E-01	1.2635E-01	0.104E+00
Pb-210	#	0.0000E+00	0.0000E+00	0.0000E+00	0.000E+00
Pb-212	F	2.9426E-01	1.0439E-01	1.0496E-01	0.833E-01
PB-214	F	5.7138E-01	1.6016E-01	1.6155E-01	0.801E-01
RA-226	#B	-2.7840E-01	-1.5801E+00	-1.5801E+00	0.936E+00
Th-230	#B	-1.0872E+01	-3.9742E+01	-3.9744E+01	0.871E+01
Th-234	F	1.2621E+00	7.0114E-01	7.0269E-01	0.911E+00
Tl-208		1.6707E-01	7.0097E-02	7.0369E-02	0.937E-01
U-235	#B	-7.7247E-01	-1.6976E+00	-1.6979E+00	0.101E+00

- All peaks for activity calculation had bad shape.
* - Activity omitted from total
& - Activity omitted from total and all peaks had bad shape.
< - MDA value printed.
A - Activity printed, but activity < MDA.
B - Activity < MDA and failed test.
C - Area < Critical level.
F - Failed fraction or key line test.
H - Halflife limit exceeded

---------- S U M M A R Y ----------

Total Activity (53.5 to 3408.3 keV) 1.1210009E+01 pCi/g

Laboratory: New World Technology

ORTEC g v - i (3263) wan32 G53W2.03 27-JUL-2006 23:01:38 Page 1
New World Technology Spectrum name: 3N003302.An1

Sample description
Parcel B 6PBIF001-003 376g
7/27/06 13:20

Acquisition information
Start time: 27-Jul-2006 22:16:33
Live time: 2700
Real time: 2702

- -

***** S U M M A R Y O F N U C L I D E S I N S A M P L E *****

Nuclide		Time of Count Activity picoCi/g	Uncertainty Counting picoCi/g	2 Sigma Total picoCi/g	MDA picoCi/g
Ac-228	F	3.2329E-01	2.1883E-01	2.1916E-01	0.183E+00
AM-241	#B	-3.0891E-02	-2.6131E-01	-2.6131E-01	0.683E-01
Bi-212	B	1.5535E-01	3.2245E-01	3.2250E-01	0.251E+00
BI-214	F	2.5105E-01	1.3101E-01	1.3134E-01	0.102E+00
CO-60	#A	1.0177E-02	2.7963E-02	2.7966E-02	0.327E-01
Cs-137	#B	-2.0701E-02	-9.9049E-02	-9.9052E-02	0.479E-01
EU-152	F	1.0210E-01	1.2910E-01	1.2916E-01	0.812E-01
EU-154	#B	-2.7170E-02	-6.7432E+00	-6.7432E+00	0.478E-01
K-40		9.0226E+00	1.5888E+00	1.6237E+00	0.110E+01
PA-234	#B	-2.1441E-02	-2.0542E-01	-2.0542E-01	0.105E+00
Pb-210	#A	9.0562E-01	1.3178E+00	1.3182E+00	0.997E+00
PB-212		3.9531E-01	1.0708E-01	1.0807E-01	0.749E-01
PB-214		3.3500E-01	1.7747E-01	1.7790E-01	0.119E+00
RA-226	#B	-3.1380E-01	-1.4668E+00	-1.4669E+00	0.816E+00
Th-230	B	3.8499E+00	3.2475E+00	3.2507E+00	0.788E+01
TH-234		8.3972E-01	9.4216E-01	9.4267E-01	0.794E+00
Tl-208	B	-4.2043E-02	-4.3580E-02	-4.3608E-02	0.111E+00
U-235	B	-1.0971E-02	-6.6520E-02	-6.6521E-02	0.432E-01

- All peaks for activity calculation had bad shape.
* - Activity omitted from total
& - Activity omitted from total and all peaks had bad shape.
< - MDA value printed.
A - Activity printed, but activity < MDA.
B - Activity < MDA and failed test.
C - Area < Critical level.
F - Failed fraction or key line test.
H - Halflife limit exceeded

---------- S U M M A R Y ----------

Total Activity (41.7 to 2660.8 keV) 1.1166934E+01 picoCi/g

Laboratory: New World Technology

ORTEC g v - i (3263) wan32 G53W2.06 27-JUL-2006 23:28:49 Page 1
New World Technology Spectrum name: 5N000390.An1

Sample description
Parcel B 6PBIF001-004 465g
7/27/06 13:30

Acquisition information
Start time: 27-Jul-2006 22:43:39
Live time: 2700
Real time: 2703

- -

***** S U M M A R Y O F N U C L I D E S I N S A M P L E *****

Nuclide		Time of Count Activity pCi/g	Uncertainty Counting pCi/g	2 Sigma Total pCi/g	MDA pCi/g
Ac-228	#F	1.4083E-01	1.5962E-01	1.5971E-01	0.135E+00
AM-241	#B	-2.4980E-02	-2.2663E-01	-2.2663E-01	0.106E+00
Bi-212	F	6.0429E-01	2.9775E-01	2.9859E-01	0.177E+00
BI-214	F	4.3774E-01	1.3692E-01	1.3788E-01	0.820E-01
CO-60	#B	-9.8409E-03	3.6874E+01	3.6874E+01	0.140E-01
CS-137	#B	-2.4586E-02	-1.4517E-01	-1.4518E-01	0.365E-01
EU-152	F	1.2600E-01	5.6351E-02	5.6543E-02	0.688E-01
EU-154	F	8.7192E-02	6.6075E-02	6.6154E-02	0.472E-01
K-40		8.9054E+00	1.3668E+00	1.4061E+00	0.853E+00
Pa-234	B	5.9457E-02	7.8104E-02	7.8135E-02	0.798E-01
Pb-210	#	0.0000E+00	0.0000E+00	0.0000E+00	0.000E+00
Pb-212		3.2508E-01	9.2067E-02	9.2851E-02	0.707E-01
PB-214		4.4116E-01	1.3219E-01	1.3319E-01	0.734E-01
RA-226	B	2.8354E-01	9.4897E-01	9.4903E-01	0.821E+00
Th-230	#B	-1.3085E+01	-9.4006E+01	-9.4007E+01	0.690E+01
Th-234	F	1.5099E+00	7.6114E-01	7.6318E-01	0.767E+00
Tl-208		2.1429E-01	5.9774E-02	6.0299E-02	0.822E-01
U-235	#B	-6.9215E-01	-2.1669E+00	-2.1671E+00	0.897E-01

- All peaks for activity calculation had bad shape.
* - Activity omitted from total
& - Activity omitted from total and all peaks had bad shape.
< - MDA value printed.
A - Activity printed, but activity < MDA.
B - Activity < MDA and failed test.
C - Area < Critical level.
F - Failed fraction or key line test.
H - Halflife limit exceeded

---------- S U M M A R Y ----------

Total Activity (53.5 to 3408.3 keV) 1.2437845E+01 pCi/g

Laboratory: New World Technology

ORTEC g v - i (3263) wan32 G53W2.03 27-JUL-2006 23:52:18 Page 1
New World Technology Spectrum name: 3N003303.An1

Sample description
Parcel B 6PBIF001-005 426g
7/27/06 13:40

Acquisition information
Start time: 27-Jul-2006 23:07:14
Live time: 2700
Real time: 2702

- -

***** S U M M A R Y O F N U C L I D E S I N S A M P L E *****

Nuclide		Time of Count Activity picoCi/g	Uncertainty Counting picoCi/g	2 Sigma Total picoCi/g	MDA picoCi/g
Ac-228	#B	6.6616E-03	4.9700E-03	4.9761E-03	0.191E+00
AM-241	#B	-2.3214E-02	-2.2902E-01	-2.2902E-01	0.699E-01
Bi-212	F	8.5002E-01	4.4944E-01	4.5055E-01	0.227E+00
BI-214	F	3.3161E-01	1.4604E-01	1.4656E-01	0.968E-01
CO-60	#B	-2.1580E-02	6.6864E+01	6.6864E+01	0.236E-01
Cs-137	A	3.3091E-02	3.9558E-02	3.9577E-02	0.349E-01
EU-152	B	7.0280E-02	9.2616E-02	9.2652E-02	0.716E-01
EU-154	#B	1.0847E-02	2.8850E-02	2.8853E-02	0.525E-01
K-40	#	7.9636E+00	1.4023E+00	1.4331E+00	0.969E+00
PA-234	#B	-6.9675E-02	-2.0111E+00	-2.0111E+00	0.703E-01
Pb-210	A	4.2821E-01	1.2192E+00	1.2193E+00	0.924E+00
PB-212	F	3.5761E-01	9.2803E-02	9.3745E-02	0.640E-01
PB-214		2.9047E-01	1.3174E-01	1.3218E-01	0.899E-01
RA-226		8.1575E-01	9.2570E-01	9.2619E-01	0.777E+00
Th-230	B	-9.5274E+00	-2.2097E+02	-2.2097E+02	0.464E+01
TH-234	B	1.5377E-01	3.9222E-01	3.9226E-01	0.693E+00
Tl-208	#B	2.2495E-03	1.4037E-03	1.4062E-03	0.103E+00
U-235	B	1.4113E-03	6.0006E-02	6.0006E-02	0.514E-01

- All peaks for activity calculation had bad shape.
* - Activity omitted from total
& - Activity omitted from total and all peaks had bad shape.
< - MDA value printed.
A - Activity printed, but activity < MDA.
B - Activity < MDA and failed test.
C - Area < Critical level.
F - Failed fraction or key line test.
H - Halflife limit exceeded

---------- S U M M A R Y ----------

Total Activity (41.7 to 2660.8 keV) 1.0609038E+01 picoCi/g

Laboratory: New World Technology

ORTEC g v - i (3263) wan32 G53W2.06 28-JUL-2006 00:17:33 Page 1
New World Technology Spectrum name: 5N000391.An1

Sample description
Parcel B 6PBIF001-006 454g
7/27/06 13:50

Acquisition information
Start time: 27-Jul-2006 23:32:23
Live time: 2700
Real time: 2703

- -

***** S U M M A R Y O F N U C L I D E S I N S A M P L E *****

Nuclide		Time of Count Activity pCi/g	Uncertainty Counting pCi/g	2 Sigma Total pCi/g	MDA pCi/g
Ac-228		3.9500E-01	2.2549E-01	2.2596E-01	0.152E+00
AM-241	#B	-1.2094E-01	-3.3790E+00	-3.3790E+00	0.106E+00
Bi-212	F	7.9686E-01	4.6405E-01	4.6499E-01	0.259E+00
BI-214	F	3.7508E-01	1.4589E-01	1.4655E-01	0.897E-01
CO-60	#B	-2.6132E-03	-1.7950E-02	-1.7950E-02	0.143E-01
CS-137	#B	-4.2154E-02	1.0050E+02	1.0050E+02	0.354E-01
EU-152	B	4.3628E-02	6.0098E-02	6.0119E-02	0.747E-01
EU-154	B	5.4184E-02	1.1593E-01	1.1595E-01	0.550E-01
K-40		8.8646E+00	1.4414E+00	1.4784E+00	0.895E+00
Pa-234	#B	-1.8081E-02	2.1176E+02	2.1176E+02	0.914E-01
Pb-210	#	0.0000E+00	0.0000E+00	0.0000E+00	0.000E+00
Pb-212	F	2.9892E-01	9.5960E-02	9.6597E-02	0.734E-01
PB-214		4.0193E-01	1.1413E-01	1.1510E-01	0.672E-01
RA-226	#B	-9.4821E-01	-6.8316E+00	-6.8317E+00	0.848E+00
Th-230	#B	-1.5241E+01	2.1195E+04	2.1195E+04	0.802E+01
Th-234	F	9.4055E-01	5.6201E-01	5.6309E-01	0.847E+00
Tl-208	B	1.1917E-01	3.1815E-02	3.2119E-02	0.130E+00
U-235	#B	-6.9195E-01	-1.4934E+00	-1.4936E+00	0.910E-01

- All peaks for activity calculation had bad shape.
* - Activity omitted from total
& - Activity omitted from total and all peaks had bad shape.
< - MDA value printed.
A - Activity printed, but activity < MDA.
B - Activity < MDA and failed test.
C - Area < Critical level.
F - Failed fraction or key line test.
H - Halflife limit exceeded

---------- S U M M A R Y ----------

Total Activity (53.5 to 3408.3 keV) 1.1132341E+01 pCi/g

Laboratory: New World Technology

ORTEC g v - i (3263) wan32 G53W2.03 28-JUL-2006 00:42:02 Page 1
New World Technology Spectrum name: 3N003304.An1

Sample description
Parcel B 6PBIF001-007 413g
7/27/06 14:00

Acquisition information
Start time: 27-Jul-2006 23:56:29
Live time: 2700
Real time: 2702

- -

***** S U M M A R Y O F N U C L I D E S I N S A M P L E *****

Nuclide		Time of Count Activity picoCi/g	Uncertainty Counting picoCi/g	2 Sigma Total picoCi/g	MDA picoCi/g
Ac-228	F	3.2041E-01	2.2898E-01	2.2929E-01	0.167E+00
AM-241	#B	-4.9522E-02	1.9578E+02	1.9578E+02	0.741E-01
Bi-212	F	5.8220E-01	3.5488E-01	3.5554E-01	0.229E+00
BI-214	#F	3.3352E-01	1.9187E-01	1.9227E-01	0.114E+00
CO-60	#B	-2.0611E-02	-9.3138E-02	-9.3142E-02	0.235E-01
Cs-137	#B	-4.2642E-03	-4.5309E-02	-4.5310E-02	0.386E-01
EU-152	F	2.5033E-01	1.9160E-01	1.9182E-01	0.732E-01
EU-154	B	3.7325E-02	4.4091E-02	4.4112E-02	0.477E-01
K-40		6.4558E+00	1.4535E+00	1.4731E+00	0.104E+01
PA-234	#B	2.4291E-02	1.3074E-01	1.3074E-01	0.118E+00
Pb-210	A	7.0538E-02	9.0815E-01	9.0815E-01	0.846E+00
PB-212		4.7626E-01	1.0714E-01	1.0859E-01	0.700E-01
PB-214		4.0290E-01	1.5332E-01	1.5404E-01	0.937E-01
RA-226	#B	-2.0133E-01	-1.2895E+00	-1.2895E+00	0.814E+00
Th-230	#B	1.1595E-01	1.1366E-01	1.1374E-01	0.858E+01
TH-234	B	3.5168E-01	4.9260E-01	4.9277E-01	0.733E+00
Tl-208	F	1.1421E-01	5.7911E-02	5.8065E-02	0.104E+00
U-235	#B	-6.9865E-03	-1.9109E-02	-1.9111E-02	0.436E-01

- All peaks for activity calculation had bad shape.
* - Activity omitted from total
& - Activity omitted from total and all peaks had bad shape.
< - MDA value printed.
A - Activity printed, but activity < MDA.
B - Activity < MDA and failed test.
C - Area < Critical level.
F - Failed fraction or key line test.
H - Halflife limit exceeded

---------- S U M M A R Y ----------

Total Activity (41.7 to 2660.8 keV) 8.8214426E+00 picoCi/g

Laboratory: New World Technology

ORTEC g v - i (3263) wan32 G53W2.06 28-JUL-2006 01:06:41 Page 1
New World Technology Spectrum name: 5N000392.An1

Sample description
Parcel B 6PBIF001-008 398g
7/27/06 14:10

Acquisition information
Start time: 28-Jul-2006 00:21:32
Live time: 2700
Real time: 2703

- -

***** S U M M A R Y O F N U C L I D E S I N S A M P L E *****

Nuclide		Time of Count Activity pCi/g	Uncertainty Counting pCi/g	2 Sigma Total pCi/g	MDA pCi/g
Ac-228	#	4.0464E-01	2.3813E-01	2.3861E-01	0.164E+00
AM-241	#B	-2.8073E-02	-1.7750E-01	-1.7750E-01	0.106E+00
Bi-212	F	5.9890E-01	4.7861E-01	4.7912E-01	0.267E+00
BI-214	F	3.7639E-01	1.6734E-01	1.6792E-01	0.101E+00
CO-60	#F	3.5344E-02	2.8247E-02	2.8277E-02	0.163E-01
CS-137	#B	-3.9413E-02	-4.1589E-01	-4.1589E-01	0.426E-01
EU-152	B	-2.7838E-02	1.8325E+02	1.8325E+02	0.693E-01
EU-154	F	9.7722E-02	1.0456E-01	1.0462E-01	0.507E-01
K-40		1.1139E+01	1.7101E+00	1.7592E+00	0.102E+01
Pa-234	B	4.7658E-02	9.4391E-02	9.4407E-02	0.107E+00
Pb-210	#	0.0000E+00	0.0000E+00	0.0000E+00	0.000E+00
Pb-212		3.4185E-01	1.1005E-01	1.1078E-01	0.863E-01
PB-214		4.8163E-01	1.2639E-01	1.2765E-01	0.794E-01
RA-226	#B	-2.2388E-01	-1.4629E+00	-1.4629E+00	0.947E+00
Th-230	#B	-7.8186E+00	-3.3259E+01	-3.3260E+01	0.112E+02
Th-234	F	1.6285E+00	6.5312E-01	6.5589E-01	0.984E+00
Tl-208	B	-8.3515E-02	-2.4449E-02	-2.4644E-02	0.170E+00
U-235	#B	-8.1958E-01	-3.3078E+00	-3.3079E+00	0.104E+00

- All peaks for activity calculation had bad shape.
* - Activity omitted from total
& - Activity omitted from total and all peaks had bad shape.
< - MDA value printed.
A - Activity printed, but activity < MDA.
B - Activity < MDA and failed test.
C - Area < Critical level.
F - Failed fraction or key line test.
H - Halflife limit exceeded

---------- S U M M A R Y ----------

Total Activity (53.5 to 3408.3 keV) 1.3377280E+01 pCi/g

Laboratory: New World Technology

ORTEC g v - i (3263) wan32 G53W2.03 28-JUL-2006 01:36:02 Page 1
New World Technology Spectrum name: 3N003305.An1

Sample description
Parcel B 6PBIF001-009 354g
7/27/06 14:20

Acquisition information
Start time: 28-Jul-2006 00:46:03
Live time: 2700
Real time: 2702

- -

***** S U M M A R Y O F N U C L I D E S I N S A M P L E *****

Nuclide		Activity picoCi/g	Time of Count Uncertainty Counting picoCi/g	2 Sigma Total picoCi/g	MDA picoCi/g
Ac-228		5.1146E-01	3.3655E-01	3.3708E-01	0.211E+00
AM-241	A	6.9617E-02	1.2236E-01	1.2239E-01	0.100E+00
Bi-212		6.7759E-01	4.7392E-01	4.7458E-01	0.294E+00
BI-214	F	2.3907E-01	1.3173E-01	1.3203E-01	0.114E+00
CO-60	#B	2.2122E-02	3.0416E-02	3.0427E-02	0.260E-01
Cs-137	A	8.9249E-03	4.5949E-02	4.5950E-02	0.440E-01
EU-152	F	1.6794E-01	1.4083E-01	1.4097E-01	0.808E-01
EU-154	#B	-2.6231E-02	-1.1086E+00	-1.1086E+00	0.544E-01
K-40		8.8224E+00	1.7203E+00	1.7512E+00	0.119E+01
PA-234	#B	-2.2765E-02	-2.8655E-01	-2.8655E-01	0.145E+00
Pb-210	#B	-3.4354E-02	-1.5910E+00	-1.5910E+00	0.117E+01
PB-212		3.6398E-01	1.0609E-01	1.0695E-01	0.752E-01
PB-214		4.4005E-01	1.9257E-01	1.9326E-01	0.106E+00
RA-226	A	6.8310E-01	1.0837E+00	1.0840E+00	0.926E+00
Th-230	B	-9.7152E+00	-6.9824E+01	-6.9825E+01	0.630E+01
TH-234	#B	4.4553E-01	9.4486E-01	9.4500E-01	0.752E+00
Tl-208	#B	2.8951E-02	1.6777E-02	1.6811E-02	0.111E+00
U-235	#B	-2.7715E-02	-1.8120E-01	-1.8120E-01	0.636E-01

- All peaks for activity calculation had bad shape.
* - Activity omitted from total
& - Activity omitted from total and all peaks had bad shape.
< - MDA value printed.
A - Activity printed, but activity < MDA.
B - Activity < MDA and failed test.
C - Area < Critical level.
F - Failed fraction or key line test.
H - Halflife limit exceeded

---------- S U M M A R Y ----------

Total Activity (41.7 to 2660.8 keV) 1.1222479E+01 picoCi/g

Laboratory: New World Technology

ORTEC g v - i (3263) wan32 G53W2.06 28-JUL-2006 01:57:33 Page 1
New World Technology Spectrum name: 5N000393.An1

Sample description
Parcel B 6PBIF001-010 360g
7/27/06 14:30

Acquisition information
Start time: 28-Jul-2006 01:12:23
Live time: 2700
Real time: 2703

- -

***** S U M M A R Y O F N U C L I D E S I N S A M P L E *****

Nuclide		Time of Count Activity pCi/g	Uncertainty Counting pCi/g	2 Sigma Total pCi/g	MDA pCi/g
Ac-228	B	1.9113E-01	2.4814E-01	2.4824E-01	0.200E+00
AM-241	#B	-7.8215E-02	-4.1755E-01	-4.1756E-01	0.118E+00
Bi-212	F	5.6558E-01	4.3161E-01	4.3212E-01	0.303E+00
BI-214	F	3.1197E-01	1.5192E-01	1.5236E-01	0.105E+00
CO-60	#B	1.0828E-02	3.3289E-02	3.3292E-02	0.262E-01
CS-137	#B	-2.6697E-02	-1.2779E-01	-1.2780E-01	0.434E-01
EU-152	F	2.8683E-01	1.7578E-01	1.7610E-01	0.913E-01
EU-154	F	1.5768E-01	1.6388E-01	1.6398E-01	0.613E-01
K-40		1.1078E+01	1.9380E+00	1.9810E+00	0.118E+01
Pa-234	#B	-2.2802E-02	2.5019E+02	2.5019E+02	0.108E+00
Pb-210	#	0.0000E+00	0.0000E+00	0.0000E+00	0.000E+00
Pb-212	F	3.2653E-01	1.1837E-01	1.1899E-01	0.947E-01
PB-214		5.2691E-01	1.6961E-01	1.7073E-01	0.945E-01
RA-226	#B	-1.0844E+00	-6.7799E+00	-6.7800E+00	0.112E+01
Th-230	#B	-1.2292E+01	-5.5441E+01	-5.5443E+01	0.110E+02
Th-234	B	6.6332E-01	8.2737E-01	8.2773E-01	0.102E+01
Tl-208	F	2.5216E-01	7.5659E-02	7.6234E-02	0.106E+00
U-235	#B	-8.6173E-01	-1.5480E+00	-1.5484E+00	0.113E+00

- All peaks for activity calculation had bad shape.
* - Activity omitted from total
& - Activity omitted from total and all peaks had bad shape.
< - MDA value printed.
A - Activity printed, but activity < MDA.
B - Activity < MDA and failed test.
C - Area < Critical level.
F - Failed fraction or key line test.
H - Halflife limit exceeded

---------- S U M M A R Y ----------

Total Activity (53.5 to 3408.3 keV) 1.3060900E+01 pCi/g

Laboratory: New World Technology

ORTEC g v - i (3263) wan32 G53W2.03 28-JUL-2006 02:26:15 Page 1
New World Technology Spectrum name: 3N003306.An1

Sample description
Parcel B 6PBIF001-011 364g
7/27/06 14:40

Acquisition information
Start time: 28-Jul-2006 01:40:44
Live time: 2700
Real time: 2702

- -

***** S U M M A R Y O F N U C L I D E S I N S A M P L E *****

Nuclide		Activity picoCi/g	Time of Count Uncertainty Counting picoCi/g	2 Sigma Total picoCi/g	MDA picoCi/g
Ac-228	#F	3.2886E-01	2.1962E-01	2.1996E-01	0.176E+00
AM-241	#B	-1.2655E-02	-1.4695E-01	-1.4695E-01	0.807E-01
Bi-212	#F	9.6929E-01	5.4169E-01	5.4288E-01	0.245E+00
BI-214	F	3.5085E-01	1.6263E-01	1.6315E-01	0.124E+00
CO-60	#B	-6.5479E-03	-3.1804E-02	-3.1805E-02	0.253E-01
Cs-137	#B	-3.8594E-02	-1.5580E-01	-1.5581E-01	0.425E-01
EU-152	F	3.4904E-01	1.8385E-01	1.8430E-01	0.723E-01
EU-154	#B	-2.8514E-02	1.3377E+02	1.3377E+02	0.488E-01
K-40		9.7884E+00	1.6677E+00	1.7067E+00	0.113E+01
PA-234	#B	-9.9664E-02	-6.2413E-01	-6.2414E-01	0.640E-01
Pb-210	#B	-7.0857E-01	-2.0267E+00	-2.0268E+00	0.103E+01
PB-212	F	4.7194E-01	1.0806E-01	1.0947E-01	0.713E-01
PB-214		3.1433E-01	1.6342E-01	1.6383E-01	0.107E+00
RA-226	A	6.3393E-01	1.0194E+00	1.0197E+00	0.874E+00
Th-230	#B	-2.9343E+00	-2.0457E+01	-2.0457E+01	0.952E+01
TH-234	C	1.0639E+00	1.0113E+00	1.0121E+00	0.854E+00
Tl-208	#B	6.7560E-02	3.2206E-02	3.2303E-02	0.129E+00
U-235	B	-7.8216E-03	-2.8217E-02	-2.8219E-02	0.522E-01

- All peaks for activity calculation had bad shape.
* - Activity omitted from total
& - Activity omitted from total and all peaks had bad shape.
< - MDA value printed.
A - Activity printed, but activity < MDA.
B - Activity < MDA and failed test.
C - Area < Critical level.
F - Failed fraction or key line test.
H - Halflife limit exceeded

---------- S U M M A R Y ----------

Total Activity (41.7 to 2660.8 keV) 1.2572660E+01 picoCi/g

Laboratory: New World Technology

ORTEC g v - i (3263) wan32 G53W2.06 28-JUL-2006 03:30:35 Page 1
New World Technology Spectrum name: 5N000394.An1

Sample description
Parcel B 6PBIF001-012 375g
7/27/06 14:50

Acquisition information
Start time: 28-Jul-2006 02:00:21
Live time: 5400
Real time: 5406

- -

***** S U M M A R Y O F N U C L I D E S I N S A M P L E *****

Nuclide		Time of Count Activity pCi/g	Uncertainty Counting pCi/g	2 Sigma Total pCi/g	MDA pCi/g
Ac-228		2.2033E-01	1.4655E-01	1.4678E-01	0.131E+00
AM-241	#B	-1.0904E-01	-4.6209E-01	-4.6211E-01	0.761E-01
Bi-212	F	5.6924E-01	2.7359E-01	2.7440E-01	0.181E+00
BI-214	F	3.2725E-01	1.4252E-01	1.4303E-01	0.821E-01
CO-60	B	1.1349E-02	9.7482E-03	9.7572E-03	0.126E-01
CS-137	#B	-4.5399E-02	-4.4093E-01	-4.4093E-01	0.289E-01
EU-152	F	2.0598E-01	1.3231E-01	1.3253E-01	0.619E-01
EU-154	F	1.2072E-01	8.2167E-02	8.2288E-02	0.365E-01
K-40		1.1356E+01	1.2323E+00	1.3021E+00	0.757E+00
Pa-234	B	6.8154E-02	7.1031E-02	7.1076E-02	0.755E-01
Pb-210	#	0.0000E+00	0.0000E+00	0.0000E+00	0.000E+00
Pb-212	F	3.5626E-01	7.9255E-02	8.0347E-02	0.621E-01
PB-214		4.9612E-01	1.3318E-01	1.3444E-01	0.683E-01
RA-226	#B	-4.2570E-01	-1.4983E+00	-1.4983E+00	0.746E+00
Th-230	#B	-6.8750E+00	-2.4616E+01	-2.4618E+01	0.876E+01
Th-234	F	1.4859E+00	6.0909E-01	6.1157E-01	0.711E+00
Tl-208		3.5530E-01	1.0662E-01	1.0743E-01	0.721E-01
U-235	#B	-8.0662E-01	-7.9342E-01	-7.9398E-01	0.759E-01

- All peaks for activity calculation had bad shape.
* - Activity omitted from total
& - Activity omitted from total and all peaks had bad shape.
< - MDA value printed.
A - Activity printed, but activity < MDA.
B - Activity < MDA and failed test.
C - Area < Critical level.
F - Failed fraction or key line test.
H - Halflife limit exceeded

---------- S U M M A R Y ----------

Total Activity (53.5 to 3408.3 keV) 1.5166050E+01 pCi/g

Laboratory: New World Technology

ORTEC g v - i (3263) wan32 G53W2.03 28-JUL-2006 06:24:38 Page 1
New World Technology Spectrum name: 3N003307.An1

Sample description
Parcel B 6PBIF001-013 418g
7/27/06 15:00

Acquisition information
Start time: 28-Jul-2006 02:29:53
Live time: 5400
Real time: 5404

- -

***** S U M M A R Y O F N U C L I D E S I N S A M P L E *****

Nuclide		Activity picoCi/g	Time of Count Uncertainty Counting picoCi/g	2 Sigma Total picoCi/g	MDA picoCi/g
Ac-228		3.3694E-01	1.7020E-01	1.7066E-01	0.125E+00
AM-241	#B	-3.5338E-02	-4.9509E-01	-4.9509E-01	0.618E-01
Bi-212	F	7.0794E-01	2.5194E-01	2.5330E-01	0.151E+00
BI-214	F	2.8362E-01	1.2178E-01	1.2224E-01	0.798E-01
CO-60	#B	-2.0975E-02	-2.1825E-01	-2.1825E-01	0.179E-01
Cs-137	A	6.0236E-03	3.5144E-02	3.5145E-02	0.320E-01
EU-152	F	7.0174E-02	8.3171E-02	8.3211E-02	0.437E-01
EU-154	B	2.1363E-03	5.4890E-03	5.4896E-03	0.319E-01
K-40		6.9537E+00	9.6253E-01	9.9646E-01	0.698E+00
PA-234	#B	-2.2262E-02	-1.6108E-01	-1.6108E-01	0.761E-01
Pb-210		7.3607E-01	8.4006E-01	8.4050E-01	0.651E+00
PB-212	F	4.1224E-01	7.1047E-02	7.2672E-02	0.484E-01
PB-214	F	3.4698E-01	9.2432E-02	9.3322E-02	0.733E-01
RA-226	A	5.3278E-01	6.5579E-01	6.5609E-01	0.561E+00
Th-230	#B	-7.9173E+00	-3.7993E+01	-3.7994E+01	0.517E+01
TH-234	C	5.3779E-01	5.5183E-01	5.5219E-01	0.524E+00
Tl-208	B	3.3234E-02	1.4529E-02	1.4581E-02	0.780E-01
U-235	#B	-3.3976E-02	-2.7389E-01	-2.7389E-01	0.372E-01

- All peaks for activity calculation had bad shape.
* - Activity omitted from total
& - Activity omitted from total and all peaks had bad shape.
< - MDA value printed.
A - Activity printed, but activity < MDA.
B - Activity < MDA and failed test.
C - Area < Critical level.
F - Failed fraction or key line test.
H - Halflife limit exceeded

---------- S U M M A R Y ----------

Total Activity (41.7 to 2660.8 keV) 9.7774429E+00 picoCi/g

Laboratory: New World Technology

ORTEC g v - i (3263) wan32 G53W2.06 28-JUL-2006 11:31:09 Page 1
New World Technology Spectrum name: 1N002860.An1

Sample description
Parcel B 6PBIF001-014 368g
7/27/06 15:10

Acquisition information
Start time: 28-Jul-2006 10:45:59
Live time: 2700
Real time: 2703

- -

***** S U M M A R Y O F N U C L I D E S I N S A M P L E *****

Nuclide		Activity picoCi/ g	Time of Count Uncertainty picoCi/ g	2 Sigma Total picoCi/ g	MDA picoCi/ g
Ac-228	C	2.7246E-01	1.4919E-01	1.4953E-01	0.205E+00
AM-241	#A	-1.4846E-01	-1.1195E+00	-1.1196E+00	0.205E+00
Bi-212		5.4240E-01	3.5866E-01	3.5922E-01	0.202E+00
BI-214	F	5.2257E-01	1.7237E-01	1.7346E-01	0.239E+00
CO-60	#A	-4.1406E-02	-3.9729E-01	-3.9730E-01	0.538E-01
CS-137	#A	-2.8021E-02	1.9206E+02	1.9206E+02	0.504E-01
EU-152	A	5.0914E-02	7.6426E-02	7.6449E-02	0.879E-01
EU-154	C	5.4674E-02	6.3957E-02	6.3989E-02	0.514E-01
K-40		9.3979E+00	1.9578E+00	1.9886E+00	0.998E+00
Pa-234	#B	-3.2801E-01	-1.4203E+00	-1.4204E+00	0.117E+00
Pb-210	#	1.2842E+01	1.3853E+01	1.3861E+01	0.839E+01
Pb-212	#B	-3.9853E-02	3.2944E+02	3.2944E+02	0.958E-01
Pb-214	#	4.5446E-01	1.2446E-01	1.2559E-01	0.455E-01
RA-226	#B	-1.2974E+00	-5.0145E+00	-5.0147E+00	0.109E+01
Th-230	#B	3.6404E+00	1.4291E+01	1.4291E+01	0.118E+02
Th-234	B	-3.4013E-01	-8.4719E-01	-8.4728E-01	0.151E+01
Tl-208		2.4767E-01	9.1953E-02	9.2411E-02	0.345E-01
U-235	A	6.1088E-03	3.1005E-02	3.1006E-02	0.512E-01

- All peaks for activity calculation had bad shape.
* - Activity omitted from total
& - Activity omitted from total and all peaks had bad shape.
< - MDA value printed.
A - Activity printed, but activity < MDA.
B - Activity < MDA and failed test.
C - Area < Critical level.
F - Failed fraction or key line test.
H - Halflife limit exceeded

---------- S U M M A R Y ----------

Total Activity (41.2 to 2605.8 keV) 2.4007235E+01 picoCi/ g

Laboratory: New World Technology

ORTEC g v - i (3263) wan32 G53W2.03 28-JUL-2006 11:40:10 Page 1
New World Technology Spectrum name: 2N003354.An1

Sample description
Parcel B 6PBIF001-015 370g
7/27/06 15:20

Acquisition information
Start time: 28-Jul-2006 10:55:03
Live time: 2700
Real time: 2704

- -

***** S U M M A R Y O F N U C L I D E S I N S A M P L E *****

Nuclide		Activity picoCi/g	Time of Count Uncertainty Counting picoCi/g	2 Sigma Total picoCi/g	MDA picoCi/g
Ac-228	C	4.1887E-01	1.7820E-01	1.7888E-01	0.169E+00
AM-241	#A	6.8046E-02	8.5661E-01	8.5661E-01	0.666E+00
Bi-212	F	5.1152E-01	3.6043E-01	3.6093E-01	0.239E+00
BI-214	F	3.8355E-01	1.2647E-01	1.2727E-01	0.798E-01
CO-60	#B	1.5204E-02	1.3349E-02	1.3361E-02	0.284E-01
Cs-137	#B	-5.3403E-03	-5.4502E-02	-5.4502E-02	0.489E-01
EU-152	F	1.4461E-01	1.2899E-01	1.2910E-01	0.957E-01
EU-154	B	5.7095E-02	1.0584E-01	1.0586E-01	0.840E-01
K-40	#	1.1320E+01	1.5895E+00	1.6441E+00	0.604E+00
PA-234	F	2.1312E-01	1.1385E-01	1.1412E-01	0.161E+00
Pb-210	#C	0.0000E+00	0.0000E+00	0.0000E+00	0.000E+00
PB-212	F	4.8009E-01	1.2433E-01	1.2560E-01	0.858E-01
PB-214		4.2776E-01	1.8888E-01	1.8955E-01	0.989E-01
RA-226	A	6.8068E-01	1.2141E+00	1.2144E+00	0.105E+01
Th-230	B	-3.1250E+01	-8.3934E+01	-8.3942E+01	0.297E+02
TH-234	#B	0.0000E+00	8.8041E+03	8.8041E+03	0.262E+01
Tl-208	F	1.8600E-01	7.7569E-02	7.7876E-02	0.188E-01
U-235	B	-3.2662E-02	-3.1477E-01	-3.1477E-01	0.620E-01

- All peaks for activity calculation had bad shape.
* - Activity omitted from total
& - Activity omitted from total and all peaks had bad shape.
< - MDA value printed.
A - Activity printed, but activity < MDA.
B - Activity < MDA and failed test.
C - Area < Critical level.
F - Failed fraction or key line test.
H - Halflife limit exceeded

---------- S U M M A R Y ----------

Total Activity (41.8 to 2673.8 keV) 1.3308646E+01 picoCi/g

Laboratory: New World Technology

ORTEC g v - i (3263) wan32 G53W2.03 28-JUL-2006 12:52:13 Page 1
New World Technology Spectrum name: 3N003312.An1

Sample description
Parcel B 6PBIF001-016 357g
7/27/06 15:30

Acquisition information
Start time: 28-Jul-2006 11:06:36
Live time: 2700
Real time: 2702

- -

***** S U M M A R Y O F N U C L I D E S I N S A M P L E *****

Nuclide		Activity picoCi/g	Time of Count Uncertainty Counting picoCi/g	2 Sigma Total picoCi/g	MDA picoCi/g
Ac-228		4.3043E-01	2.7319E-01	2.7366E-01	0.195E+00
AM-241	#B	-3.2535E-02	-3.2280E-01	-3.2280E-01	0.825E-01
Bi-212	F	5.5238E-01	3.9939E-01	3.9991E-01	0.269E+00
BI-214	F	2.9754E-01	1.9517E-01	1.9548E-01	0.122E+00
CO-60	#B	-6.6763E-03	-3.2428E-02	-3.2429E-02	0.258E-01
Cs-137	#B	-3.5492E-02	-1.6049E-01	-1.6049E-01	0.480E-01
EU-152	#B	-4.6544E-03	1.7998E+02	1.7998E+02	0.634E-01
EU-154	B	2.1519E-02	6.6176E-02	6.6181E-02	0.462E-01
K-40		9.4550E+00	1.6707E+00	1.7070E+00	0.116E+01
PA-234	#B	-5.2653E-02	-4.5775E-01	-4.5775E-01	0.105E+00
Pb-210	#B	-6.6086E-01	-2.2279E+00	-2.2280E+00	0.106E+01
PB-212	F	3.6470E-01	1.1150E-01	1.1231E-01	0.804E-01
PB-214		3.5855E-01	1.8446E-01	1.8494E-01	0.114E+00
RA-226	A	3.9935E-02	1.0018E+00	1.0018E+00	0.893E+00
Th-230	#B	2.6594E-01	5.2229E-01	5.2238E-01	0.906E+01
TH-234	#C	7.7899E-01	8.5799E-01	8.5847E-01	0.711E+00
Tl-208	#B	2.3564E-02	1.3255E-02	1.3283E-02	0.119E+00
U-235	#B	-3.0973E-02	-2.5697E-01	-2.5697E-01	0.616E-01

- All peaks for activity calculation had bad shape.
* - Activity omitted from total
& - Activity omitted from total and all peaks had bad shape.
< - MDA value printed.
A - Activity printed, but activity < MDA.
B - Activity < MDA and failed test.
C - Area < Critical level.
F - Failed fraction or key line test.
H - Halflife limit exceeded

---------- S U M M A R Y ----------

Total Activity (41.7 to 2660.8 keV) 1.1458595E+01 picoCi/g

Laboratory: New World Technology

ORTEC g v - i (3263) wan32 G53W2.06 28-JUL-2006 12:19:42 Page 1
New World Technology Spectrum name: 1N002861.An1

Sample description
Parcel B 6PBIF001-017 347g
7/27/06 15:40

Acquisition information
Start time: 28-Jul-2006 11:34:28
Live time: 2700
Real time: 2703

- -

***** S U M M A R Y O F N U C L I D E S I N S A M P L E *****

Nuclide		Activity picoCi/ g	Time of Count Uncertainty picoCi/ g	2 Sigma Total picoCi/ g	MDA picoCi/ g
Ac-228	F	4.5611E-01	1.7428E-01	1.7509E-01	0.188E+00
AM-241	#A	-7.0727E-02	-5.5219E-01	-5.5220E-01	0.262E+00
Bi-212	C	2.7039E-01	3.0440E-01	3.0457E-01	0.218E+00
BI-214	#F	9.7864E-01	6.5243E-01	6.5344E-01	0.253E+00
CO-60	#A	-4.2190E-02	-1.9830E-01	-1.9831E-01	0.487E-01
CS-137	#A	-2.9716E-02	1.3348E+02	1.3348E+02	0.470E-01
EU-152	C	1.3767E-01	1.2751E-01	1.2761E-01	0.783E-01
EU-154	C	5.9582E-02	8.1695E-02	8.1724E-02	0.513E-01
K-40		7.5187E+00	1.8587E+00	1.8795E+00	0.106E+01
Pa-234	#B	-6.7438E-02	-5.4498E-02	-5.4555E-02	0.136E+00
Pb-210	#A	4.6038E+00	7.8249E+00	7.8267E+00	0.611E+01
Pb-212	F	3.7801E-01	1.1465E-01	1.1550E-01	0.691E-01
Pb-214		5.0662E-01	1.6372E-01	1.6479E-01	0.663E-01
RA-226	#B	-8.9446E-01	-2.5719E+00	-2.5721E+00	0.106E+01
Th-230	B	-5.3345E+00	-7.1337E+01	-7.1337E+01	0.860E+01
Th-234	A	1.0042E+00	8.7400E-01	8.7479E-01	0.172E+01
Tl-208	#	2.0472E-01	7.0804E-02	7.1210E-02	0.241E-01
U-235	A	4.9654E-02	5.7133E-02	5.7163E-02	0.529E-01

- All peaks for activity calculation had bad shape.
* - Activity omitted from total
& - Activity omitted from total and all peaks had bad shape.
< - MDA value printed.
A - Activity printed, but activity < MDA.
B - Activity < MDA and failed test.
C - Area < Critical level.
F - Failed fraction or key line test.
H - Halflife limit exceeded

---------- S U M M A R Y ----------

Total Activity (41.2 to 2605.8 keV) 9.5866594E+00 picoCi/ g

Laboratory: New World Technology

ORTEC g v - i (3263) wan32 G53W2.03 28-JUL-2006 12:39:52 Page 1
New World Technology Spectrum name: 2N003355.An1

Sample description
Parcel B 6PBIF001-018 382g
7/27/06 15:50

Acquisition information
Start time: 28-Jul-2006 11:54:45
Live time: 2700
Real time: 2704

- -

***** S U M M A R Y O F N U C L I D E S I N S A M P L E *****

Nuclide		Activity picoCi/g	Time of Count Uncertainty picoCi/g	2 Sigma Total picoCi/g	MDA picoCi/g
Ac-228	C	3.3282E-01	2.0632E-01	2.0669E-01	0.173E+00
AM-241	#B	-1.1612E-01	-8.1178E-01	-8.1179E-01	0.510E+00
Bi-212	F	3.7680E-01	3.6734E-01	3.6760E-01	0.267E+00
BI-214	F	3.5128E-01	1.6627E-01	1.6678E-01	0.104E+00
CO-60	#B	-2.3356E-02	-1.0691E-01	-1.0692E-01	0.273E-01
Cs-137	#B	-7.9952E-03	-4.8698E-02	-4.8699E-02	0.434E-01
EU-152	B	7.1693E-02	7.5813E-02	7.5860E-02	0.108E+00
EU-154	B	1.3034E-02	6.2171E-02	6.2173E-02	0.765E-01
K-40		1.1061E+01	1.5456E+00	1.5992E+00	0.585E+00
PA-234	#F	2.2086E-01	2.4735E-01	2.4749E-01	0.154E+00
Pb-210	#F	0.0000E+00	0.0000E+00	0.0000E+00	0.000E+00
PB-212		3.4451E-01	1.1654E-01	1.1724E-01	0.860E-01
PB-214		2.8098E-01	1.2431E-01	1.2475E-01	0.920E-01
RA-226	A	1.8358E-01	1.2922E+00	1.2923E+00	0.113E+01
Th-230	#B	-2.9182E+01	-3.9131E+01	-3.9146E+01	0.198E+02
TH-234	A	1.7623E+00	2.1728E+00	2.1738E+00	0.214E+01
Tl-208	#	2.3520E-01	8.5884E-02	8.6326E-02	0.183E-01
U-235	A	1.4012E-02	7.6850E-02	7.6852E-02	0.632E-01

- All peaks for activity calculation had bad shape.
* - Activity omitted from total
& - Activity omitted from total and all peaks had bad shape.
< - MDA value printed.
A - Activity printed, but activity < MDA.
B - Activity < MDA and failed test.
C - Area < Critical level.
F - Failed fraction or key line test.
H - Halflife limit exceeded

---------- S U M M A R Y ----------

Total Activity (41.8 to 2673.8 keV) 1.2870369E+01 picoCi/g

Laboratory: New World Technology

STRONTIUM-90 ANALYSIS REPORT

Count Date:	12/22/2006	Instrument ID:	Protean WPC 9550	Count Time:	30 min
Batch ID:	NWTLAB122206-095	Detector ID:	0615608	^{90}Y Eff.:	31.1%
Performed By:	P Smith	Cal Due Date:	9/27/2006	^{90}Sr Eff.:	26.9%
				^{90}Sr Added:	10 mg

Sample ID	Collected m/dd/yy hh:mm	^{90}Y in-growth m/dd/yy hh:mm	Counted m/dd/yy hh:mm	Aliquot Mass grams	Initial Mass grams	Final Mass grams	^{90}Sr Yield percent	Total CPM	Total Counts	^{90}Sr Activity pCi/g	MDC pCi/g	2 σ Uncert. pCi/g
6PBIF001-005	7/27/06 13:40	12/21/06 10:00	12/21/06 21:45	10	6.8133	6.8248	107.0%	0.833	25	0.041	0.049	0.117
6PBIF001-012	7/27/06 14:50	12/21/06 9:55	12/21/06 22:46	10	6.7914	6.8020	98.0%	0.500	15	0.015	0.054	0.075
Method Spike 3.49	12/20/06 7:00	12/21/06 9:59	12/22/06 0:47	10	6.8165	6.8271	98.0%	22.400	672	3.432	0.092	1.461
Blank	12/20/06 7:00	12/21/06 10:00	12/22/06 1:18	10	6.7656	6.7664	0.0%	0.333	10			

ORTEC g v - i (3263) wan32 G53W2.06 19-FEB-2007 15:26:50 Page 1
New World Technology Spectrum name: 1N000289.An1

Sample description
Parcel B 6PBIF002-001 304g
2/19/07 07:30

Acquisition information
Start time: 19-Feb-2007 14:41:39
Live time: 2700
Real time: 2703

- -

***** S U M M A R Y O F N U C L I D E S I N S A M P L E *****

Nuclide		Time of Count Activity pCi/ g	Uncertainty Counting pCi/ g	2 Sigma Total pCi/ g	MDA pCi/ g
Ac-228		5.6771E-01	2.2570E-01	2.2669E-01	0.927E-01
AM-241	#A	-1.2544E-01	2.2151E+02	2.2151E+02	0.956E-01
Bi-212	F	6.6458E-01	4.3890E-01	4.3959E-01	0.268E+00
BI-214	F	1.6897E+00	1.0645E+00	1.0663E+00	0.672E+00
CO-60	#A	-1.7906E-02	-5.6522E-02	-5.6526E-02	0.241E-01
CS-137		6.1821E-02	5.3120E-02	5.3170E-02	0.357E-01
EU-152	C	1.2710E-01	8.6255E-02	8.6383E-02	0.841E-01
EU-154	A	4.9696E-02	5.9635E-02	5.9663E-02	0.632E-01
K-40		7.5522E+00	1.4867E+00	1.5130E+00	0.753E+00
Pa-234	#B	6.9468E-02	1.7192E-01	1.7194E-01	0.120E+00
Pb-210	A	9.1505E-01	1.2512E+00	1.2516E+00	0.990E+00
Pb-212		3.8506E-01	1.4191E-01	1.4263E-01	0.965E-01
Pb-214		4.2112E-01	1.3798E-01	1.3886E-01	0.895E-01
RA-226	A	2.8430E-02	1.1758E+00	1.1758E+00	0.107E+01
Th-230	#B	-1.8558E+00	-2.0230E+01	-2.0231E+01	0.951E+01
Th-234	B	3.9904E-01	5.4528E-01	5.4547E-01	0.788E+00
Tl-208	F	2.3446E-01	9.5640E-02	9.6037E-02	0.219E-01
U-235	A	6.2346E-02	1.1551E-01	1.1553E-01	0.632E-01

- All peaks for activity calculation had bad shape.
* - Activity omitted from total
& - Activity omitted from total and all peaks had bad shape.
< - MDA value printed.
A - Activity printed, but activity < MDA.
B - Activity < MDA and failed test.
C - Area < Critical level.
F - Failed fraction or key line test.
H - Halflife limit exceeded

---------- S U M M A R Y ----------

Total Activity (41.8 to 2666.6 keV) 1.1576583E+01 pCi/ g

Laboratory: New World Technology

ORTEC g v - i (3263) wan32 G53W2.03 20-FEB-2007 06:13:21 Page 1
New World Technology Spectrum name: 2N000301.An1

Sample description
Parcel B 6PBIF002-002 308g
2/19/07 07:40

Acquisition information
Start time: 19-Feb-2007 14:48:30
Live time: 2700
Real time: 2704

- -

***** S U M M A R Y O F N U C L I D E S I N S A M P L E *****

Nuclide	Time of Count Activity pCi/g	Uncertainty Counting pCi/g	2 Sigma Total pCi/g	MDA pCi/g
Ac-228	5.1838E-01	2.3297E-01	2.3377E-01	0.211E+00
AM-241 #B	-7.1121E-01	2.3168E+03	2.3168E+03	0.745E+00
Bi-212 #B	-1.2200E-01	1.5225E+03	1.5225E+03	0.367E+00
BI-214 #F	2.4491E-01	1.5251E-01	1.5278E-01	0.372E-01
CO-60 #B	1.4972E-02	1.4206E-02	1.4217E-02	0.403E-01
Cs-137 #	8.8884E-02	6.6819E-02	6.6901E-02	0.412E-01
EU-152 B	4.6686E-02	5.0124E-02	5.0154E-02	0.930E-01
EU-154 B	5.8307E-02	4.7119E-02	4.7169E-02	0.633E-01
K-40	1.1311E+01	1.6804E+00	1.7319E+00	0.243E+00
PA-234 #B	1.2198E-01	1.2167E-01	1.2176E-01	0.139E+00
Pb-210 #C	0.0000E+00	0.0000E+00	0.0000E+00	0.000E+00
PB-212	3.1518E-01	1.3798E-01	1.3847E-01	0.101E+00
PB-214 F	3.5264E-01	1.9763E-01	1.9807E-01	0.123E+00
RA-226 #A	5.6223E-01	1.4252E+00	1.4253E+00	0.108E+01
Th-230 #B	-4.0966E+01	-6.0787E+01	-6.0806E+01	0.252E+02
TH-234	3.2567E+00	4.2908E+00	4.2925E+00	0.312E+01
Tl-208 #C	1.1531E-01	5.9140E-02	5.9295E-02	0.496E-01
U-235 #B	-5.9332E-02	1.4994E+02	1.4994E+02	0.567E-01

- All peaks for activity calculation had bad shape.
* - Activity omitted from total
& - Activity omitted from total and all peaks had bad shape.
< - MDA value printed.
A - Activity printed, but activity < MDA.
B - Activity < MDA and failed test.
C - Area < Critical level.
F - Failed fraction or key line test.
H - Halflife limit exceeded

---------- S U M M A R Y ----------

Total Activity (41.2 to 2634.2 keV) 1.5842535E+01 pCi/g

Laboratory: New World Technology

ORTEC g v - i (3263) wan32 G53W2.03 20-FEB-2007 06:44:06 Page 1
New World Technology Spectrum name: 3N000123.An1

Sample description
Parcel B 6PBIF002-003 324g
2/19/07 07:50

Acquisition information
Start time: 19-Feb-2007 14:53:31
Live time: 2700
Real time: 2704

- -

***** S U M M A R Y O F N U C L I D E S I N S A M P L E *****

Nuclide		Time of Count Activity pCi/g	Uncertainty Counting pCi/g	2 Sigma Total pCi/g	MDA pCi/g
Ac-228	F	7.2311E-01	3.4292E-01	3.4397E-01	0.218E+00
AM-241	#B	-1.3983E-02	-2.5933E-01	-2.5933E-01	0.136E+00
Bi-212	F	7.3045E-01	4.7547E-01	4.7624E-01	0.316E+00
BI-214	F	5.0497E-01	1.9729E-01	1.9817E-01	0.154E+00
CO-60	#B	-6.1476E-02	-2.8127E-01	-2.8128E-01	0.424E-01
Cs-137	#B	-5.9811E-02	-6.0821E-01	-6.0821E-01	0.540E-01
EU-152	F	1.6738E-01	1.8171E-01	1.8182E-01	0.113E+00
EU-154	A	3.1095E-02	6.3594E-02	6.3605E-02	0.777E-01
K-40		1.3177E+01	1.6803E+00	1.7500E+00	0.125E+00
PA-234	B	9.9215E-02	2.1039E-01	2.1042E-01	0.173E+00
Pb-210	#B	-3.0790E-01	-1.9313E+00	-1.9313E+00	0.135E+01
PB-212	F	3.2754E-01	1.2133E-01	1.2193E-01	0.913E-01
PB-214	F	1.8706E-01	1.4156E-01	1.4173E-01	0.132E+00
RA-226	#B	-5.1312E-01	-2.4225E+00	-2.4226E+00	0.114E+01
Th-230	#B	1.0645E+01	1.0265E+01	1.0272E+01	0.111E+02
TH-234		1.1651E+00	1.1083E+00	1.1091E+00	0.875E+00
Tl-208		1.5706E-01	8.1947E-02	8.2154E-02	0.981E-01
U-235	#B	-3.0323E-03	-8.5664E-02	-8.5664E-02	0.659E-01

- All peaks for activity calculation had bad shape.
* - Activity omitted from total
& - Activity omitted from total and all peaks had bad shape.
< - MDA value printed.
A - Activity printed, but activity < MDA.
B - Activity < MDA and failed test.
C - Area < Critical level.
F - Failed fraction or key line test.
H - Halflife limit exceeded

---------- S U M M A R Y ----------

Total Activity (41.9 to 2676.4 keV) 1.6467535E+01 pCi/g

Laboratory: New World Technology

ORTEC g v - i (3263) wan32 G53W2.06 20-FEB-2007 11:10:00 Page 1
New World Technology Spectrum name: 4N000244.An1

Sample description
Parcel B 6PBIF002-004 304g
2/19/07 08:00

Acquisition information
Start time: 19-Feb-2007 14:56:03
Live time: 2700
Real time: 2703

- -

***** S U M M A R Y O F N U C L I D E S I N S A M P L E *****

Nuclide		Activity pCi/g	Time of Count Uncertainty Counting pCi/g	2 Sigma Total pCi/g	MDA pCi/g
Ac-228	F	6.3898E-01	2.5222E-01	2.5333E-01	0.123E+00
AM-241	#A	-5.0412E-02	-4.4713E-01	-4.4714E-01	0.142E+00
Bi-212	B	8.1667E-02	4.6218E-01	4.6219E-01	0.471E+00
BI-214		5.7043E-01	1.7290E-01	1.7419E-01	0.817E-01
CO-60	#B	-8.8822E-03	-7.2698E-02	-7.2699E-02	0.234E-01
CS-137	#B	-8.6726E-03	-8.5716E-02	-8.5717E-02	0.500E-01
EU-152	F	2.5372E-01	1.7843E-01	1.7868E-01	0.117E+00
EU-154	B	3.3675E-02	7.6321E-02	7.6331E-02	0.928E-01
K-40		1.0362E+01	1.8706E+00	1.9096E+00	0.105E+01
Pa-234	F	2.3342E-01	1.4737E-01	1.4762E-01	0.118E+00
Pb-210	#	2.7305E+00	2.0871E+00	2.0896E+00	0.134E+01
Pb-212	F	4.7750E-01	1.4833E-01	1.4938E-01	0.103E+00
PB-214	F	5.0662E-01	1.5353E-01	1.5468E-01	0.991E-01
RA-226	B	1.0217E+00	1.5614E+00	1.5619E+00	0.135E+01
Th-230	#B	-8.5719E-02	2.6710E+04	2.6710E+04	0.115E+02
Th-234		2.1309E+00	1.4108E+00	1.4130E+00	0.130E+01
Tl-208	F	4.1367E-01	1.3889E-01	1.3974E-01	0.512E-01
U-235	#B	-1.5660E+00	-2.6955E+00	-2.6962E+00	0.165E+00

- All peaks for activity calculation had bad shape.
* - Activity omitted from total
& - Activity omitted from total and all peaks had bad shape.
< - MDA value printed.
A - Activity printed, but activity < MDA.
B - Activity < MDA and failed test.
C - Area < Critical level.
F - Failed fraction or key line test.
H - Halflife limit exceeded

---------- S U M M A R Y ----------

Total Activity (42.8 to 3401.4 keV) 1.8084658E+01 pCi/g

Laboratory: New World Technology

ORTEC g v - i (3263) wan32 G53W2.06 19-FEB-2007 15:51:03 Page 1
New World Technology Spectrum name: 5N000273.An1

Sample description
Parcel B 6PBIF002-005 289g
2/19/07 08:10

Acquisition information
Start time: 19-Feb-2007 15:05:54
Live time: 2700
Real time: 2703

- -

***** S U M M A R Y O F N U C L I D E S I N S A M P L E *****

Nuclide		Time of Count Activity pCi/g	Uncertainty Counting pCi/g	2 Sigma Total pCi/g	MDA pCi/g
Ac-228	#	6.1054E-01	3.6421E-01	3.6491E-01	0.237E+00
AM-241	#B	-1.4652E-01	-1.1160E+00	-1.1160E+00	0.150E+00
Bi-212	#B	-4.0037E-02	1.2994E+03	1.2994E+03	0.407E+00
BI-214	F	4.0777E-01	1.7452E-01	1.7518E-01	0.130E+00
CO-60	#B	-1.1567E-02	-5.6949E-02	-5.6950E-02	0.226E-01
CS-137	#B	-2.3933E-02	-9.9798E-02	-9.9802E-02	0.511E-01
EU-152	F	1.2303E-01	1.2585E-01	1.2593E-01	0.112E+00
EU-154	F	8.3135E-02	8.6652E-02	8.6707E-02	0.761E-01
K-40		1.0910E+01	1.7764E+00	1.8220E+00	0.103E+01
Pa-234	F	1.2131E-01	1.1537E-01	1.1546E-01	0.119E+00
Pb-210	#	1.3210E+00	1.2933E+00	1.2942E+00	0.961E+00
Pb-212	F	2.4250E-01	1.3692E-01	1.3721E-01	0.115E+00
PB-214	F	4.8148E-01	1.8978E-01	1.9062E-01	0.984E-01
RA-226	B	2.9052E-01	1.3084E+00	1.3084E+00	0.115E+01
Th-230	#B	-1.2809E+01	-6.2655E+01	-6.2657E+01	0.105E+02
Th-234	B	8.7421E-01	4.6474E-01	4.6586E-01	0.104E+01
Tl-208	F	3.1695E-01	8.4549E-02	8.5364E-02	0.103E+00
U-235	B	-1.0768E+00	-2.5117E+00	-2.5120E+00	0.137E+00

- All peaks for activity calculation had bad shape.
* - Activity omitted from total
& - Activity omitted from total and all peaks had bad shape.
< - MDA value printed.
A - Activity printed, but activity < MDA.
B - Activity < MDA and failed test.
C - Area < Critical level.
F - Failed fraction or key line test.
H - Halflife limit exceeded

---------- S U M M A R Y ----------

Total Activity (41.8 to 2665.6 keV) 1.3973738E+01 pCi/g

Laboratory: New World Technology

ORTEC g v - i (3263) wan32 G53W2.06 19-FEB-2007 14:46:03 Page 1
New World Technology Spectrum name: 7N000177.An1

Sample description
Parcel B 6PBIF002-006 300g
2/19/07 08:20

Acquisition information
Start time: 19-Feb-2007 14:00:50
Live time: 2700
Real time: 2706

- -

***** S U M M A R Y O F N U C L I D E S I N S A M P L E *****

Nuclide		Time of Count Activity pCi/g	Uncertainty Counting pCi/g	2 Sigma Total pCi/g	MDA pCi/g
AC-228	F	1.0124E+00	3.4681E-01	3.4884E-01	0.154E+00
AM-241	B	2.2705E-02	1.8276E-01	1.8276E-01	0.152E+00
BI-212	F	4.9399E-01	5.3336E-01	5.3368E-01	0.417E+00
BI-214	F	8.2743E-01	2.4955E-01	2.5143E-01	0.109E+00
CO-60	#B	-4.7682E-02	-1.2003E-01	-1.2004E-01	0.612E-01
CS-137	#B	-5.0483E-02	-2.8462E-01	-2.8462E-01	0.605E-01
EU-152	B	-1.5018E-01	-1.4087E+00	-1.4087E+00	0.134E+00
EU-154	F	1.8583E-01	1.8450E-01	1.8463E-01	0.675E-01
K-40		1.4475E+01	2.0355E+00	2.1053E+00	0.107E+01
PA-234	B	1.0669E-01	1.7448E-01	1.7453E-01	0.149E+00
PB-210		2.2996E+00	1.8907E+00	1.8927E+00	0.152E+01
PB-212	F	5.2269E-01	1.2882E-01	1.3028E-01	0.957E-01
PB-214		4.4652E-01	1.7869E-01	1.7946E-01	0.111E+00
RA-226	#B	-1.2247E-02	-1.4715E+00	-1.4715E+00	0.128E+01
Th-230	#B	-1.8116E+01	2.6562E+04	2.6562E+04	0.115E+02
TH-234	#B	-4.9518E-01	-2.1332E+00	-2.1333E+00	0.139E+01
TL-208	#F	1.3877E-01	6.4350E-02	6.4556E-02	0.540E-01
U-235	#B	-7.2026E-01	-1.1697E+00	-1.1700E+00	0.118E+00

- All peaks for activity calculation had bad shape.
* - Activity omitted from total
& - Activity omitted from total and all peaks had bad shape.
< - MDA value printed.
A - Activity printed, but activity < MDA.
B - Activity < MDA and failed test.
C - Area < Critical level.
F - Failed fraction or key line test.
H - Halflife limit exceeded

---------- S U M M A R Y ----------

Total Activity (42.1 to 2687.4 keV) 1.9583656E+01 pCi/g

Laboratory: New World Technology

ORTEC g v - i (3263) wan32 G53W2.06 20-FEB-2007 07:23:00 Page 1
New World Technology Spectrum name: 6N000208.An1

Sample description
Parcel B 6PBIF002-007 323g
2/19/07 08:30

Acquisition information
Start time: 19-Feb-2007 15:05:58
Live time: 2700
Real time: 2702

- -

***** S U M M A R Y O F N U C L I D E S I N S A M P L E *****

Nuclide		Time of Count Activity pCi/g	Uncertainty Counting pCi/g	2 Sigma Total pCi/g	MDA pCi/g
Ac-228	F	5.5866E-01	1.7435E-01	1.7557E-01	0.236E+00
AM-241	A	8.0130E-02	1.2444E-01	1.2447E-01	0.104E+00
Bi-212	B	2.1057E-01	2.9779E-01	2.9790E-01	0.446E+00
BI-214	F	3.1201E-01	1.2240E-01	1.2294E-01	0.109E+00
CO-60	#B	-1.2302E-01	-5.0262E-01	-5.0265E-01	0.606E-01
CS-137	#B	-3.9972E-02	-1.1910E-01	-1.1911E-01	0.437E-01
EU-152	F	2.6182E-01	9.8911E-02	9.9386E-02	0.702E-01
EU-154	#F	2.5514E-01	1.2976E-01	1.3011E-01	0.690E-01
K-40		1.3132E+01	1.8892E+00	1.9509E+00	0.106E+01
Pa-234	F	4.7818E-01	4.1234E-01	4.1272E-01	0.133E+00
Pb-210	#	4.1342E+00	2.3207E+00	2.3258E+00	0.821E+00
Pb-212		4.9062E-01	9.5673E-02	9.7388E-02	0.651E-01
PB-214		1.5616E+01	4.4137E+00	4.4515E+00	0.102E+01
RA-226	F	1.0047E+00	1.1140E+00	1.1146E+00	0.959E+00
Th-230	B	6.6060E+00	1.2878E+01	1.2880E+01	0.109E+02
Th-234		2.8353E+00	1.4648E+00	1.4686E+00	0.107E+01
Tl-208	F	1.9618E-01	6.0695E-02	6.1129E-02	0.438E-01
U-235	B	-1.6586E-01	-8.2794E-02	-8.3022E-02	0.875E-01

- All peaks for activity calculation had bad shape.
* - Activity omitted from total
& - Activity omitted from total and all peaks had bad shape.
< - MDA value printed.
A - Activity printed, but activity < MDA.
B - Activity < MDA and failed test.
C - Area < Critical level.
F - Failed fraction or key line test.
H - Halflife limit exceeded

---------- S U M M A R Y ----------

Total Activity (41.1 to 2612.9 keV) 3.8015041E+01 pCi/g

Laboratory: New World Technology

ORTEC g v - i (3263) wan32 G53W2.06 20-FEB-2007 16:20:07 Page 1
New World Technology Spectrum name: 6N000210.An1

Sample description
Parcel B 6PBIF002-007DUP 323g
2/19/07 08:30

Acquisition information
Start time: 20-Feb-2007 12:19:21
Live time: 2700
Real time: 2702

- -

***** S U M M A R Y O F N U C L I D E S I N S A M P L E *****

Nuclide		Time of Count Activity pCi/g	Uncertainty Counting pCi/g	2 Sigma Total pCi/g	MDA pCi/g
Ac-228	F	9.3238E-01	1.5945E-01	1.6316E-01	0.236E+00
AM-241		1.7326E-01	1.4613E-01	1.4627E-01	0.118E+00
Bi-212	B	2.0793E-01	4.9116E-01	4.9123E-01	0.451E+00
BI-214	F	7.3222E-01	1.6017E-01	1.6246E-01	0.109E+00
CO-60	#B	-1.2302E-01	-5.0262E-01	-5.0265E-01	0.606E-01
CS-137	#B	-3.2806E-02	-9.8511E-02	-9.8518E-02	0.443E-01
EU-152	F	2.0774E-01	1.3973E-01	1.3995E-01	0.108E+00
EU-154	F	3.4921E-01	1.1763E-01	1.1834E-01	0.751E-01
K-40		1.0938E+01	1.7637E+00	1.8097E+00	0.106E+01
Pa-234	F	2.2746E-01	1.2793E-01	1.2821E-01	0.605E-01
Pb-210		3.8003E+00	2.3393E+00	2.3436E+00	0.857E+00
Pb-212		4.5746E-01	8.4589E-02	8.6273E-02	0.556E-01
PB-214		3.4507E+00	1.4934E+00	1.4989E+00	0.580E+00
RA-226	F	1.0753E+00	1.2005E+00	1.2012E+00	0.103E+01
Th-230	B	6.4256E+00	1.3725E+01	1.3727E+01	0.116E+02
Th-234		4.0457E+00	2.1551E+00	2.1603E+00	0.105E+01
Tl-208	F	2.0197E-01	6.1244E-02	6.1700E-02	0.438E-01
U-235	#B	-3.7436E-01	-4.4750E-01	-4.4771E-01	0.880E-01

- All peaks for activity calculation had bad shape.
* - Activity omitted from total
& - Activity omitted from total and all peaks had bad shape.
< - MDA value printed.
A - Activity printed, but activity < MDA.
B - Activity < MDA and failed test.
C - Area < Critical level.
F - Failed fraction or key line test.
H - Halflife limit exceeded

---------- S U M M A R Y ----------

Total Activity (41.1 to 2612.9 keV) 2.4356661E+01 pCi/g

Laboratory: New World Technology

ORTEC g v - i (3263) wan32 G53W2.06 20-FEB-2007 06:39:37 Page 1
New World Technology Spectrum name: 7N000178.An1

Sample description
Parcel B 6PBIF002-008 321g
2/19/07 08:40

Acquisition information
Start time: 19-Feb-2007 15:06:46
Live time: 2700
Real time: 2706

- -

***** S U M M A R Y O F N U C L I D E S I N S A M P L E *****

Nuclide		Time of Count Activity pCi/g	Uncertainty Counting pCi/g	2 Sigma Total pCi/g	MDA pCi/g
AC-228	F	1.1398E+00	3.7263E-01	3.7502E-01	0.145E+00
AM-241	B	8.7894E-02	1.6468E-01	1.6471E-01	0.135E+00
BI-212	B	6.9759E-02	4.6428E-01	4.6429E-01	0.396E+00
BI-214	F	6.6347E-01	2.5669E-01	2.5787E-01	0.110E+00
CO-60	#B	-1.0484E-01	-3.4597E-01	-3.4599E-01	0.522E-01
CS-137	#B	-5.6767E-02	-3.9827E-01	-3.9828E-01	0.522E-01
EU-152	#B	1.0846E-01	5.5979E-02	5.6123E-02	0.125E+00
EU-154	#B	2.2562E-02	5.7384E-02	5.7391E-02	0.854E-01
K-40		1.2504E+01	1.7563E+00	1.8167E+00	0.969E+00
PA-234	F	4.4356E-01	1.6902E-01	1.6982E-01	0.141E+00
PB-210		3.6890E+00	2.4541E+00	2.4579E+00	0.151E+01
PB-212	F	5.5528E-01	1.2107E-01	1.2281E-01	0.810E-01
PB-214		4.0695E-01	1.6358E-01	1.6427E-01	0.124E+00
RA-226	B	2.2127E-01	1.2362E+00	1.2362E+00	0.110E+01
Th-230	#B	-7.4922E+00	-3.2438E+01	-3.2439E+01	0.111E+02
TH-234	#B	-1.0247E+00	-2.8646E+00	-2.8648E+00	0.128E+01
TL-208	F	3.9815E-01	1.1594E-01	1.1688E-01	0.321E-01
U-235	#B	-6.0170E-01	-7.0561E-01	-7.0597E-01	0.112E+00

- All peaks for activity calculation had bad shape.
* - Activity omitted from total
& - Activity omitted from total and all peaks had bad shape.
< - MDA value printed.
A - Activity printed, but activity < MDA.
B - Activity < MDA and failed test.
C - Area < Critical level.
F - Failed fraction or key line test.
H - Halflife limit exceeded

---------- S U M M A R Y ----------

Total Activity (42.1 to 2687.4 keV) 1.9357141E+01 pCi/g

Laboratory: New World Technology

ORTEC g v - i (3263) wan32 G53W2.06 20-FEB-2007 06:54:35 Page 1
New World Technology Spectrum name: 1N000290.An1

Sample description
Parcel B 6PBIF002-009 359g
2/19/07 08:50

Acquisition information
Start time: 20-Feb-2007 06:09:21
Live time: 2700
Real time: 2704

- -

***** S U M M A R Y O F N U C L I D E S I N S A M P L E *****

Nuclide		Activity pCi/ g	Time of Count Uncertainty Counting pCi/ g	2 Sigma Total pCi/ g	MDA pCi/ g
Ac-228		3.8444E-01	1.5905E-01	1.5969E-01	0.785E-01
AM-241	#A	-4.1150E-02	-1.9627E-01	-1.9627E-01	0.797E-01
Bi-212	F	7.4198E-01	4.4213E-01	4.4299E-01	0.239E+00
BI-214	B	4.1031E-01	2.0448E-01	2.0505E-01	0.565E+00
CO-60	#	3.1843E-02	3.0326E-02	3.0349E-02	0.194E-01
CS-137		3.8476E-02	3.1708E-02	3.1740E-02	0.189E-01
EU-152	C	1.4220E-01	1.5326E-01	1.5335E-01	0.738E-01
EU-154	C	5.2463E-02	5.3843E-02	5.3878E-02	0.424E-01
K-40		8.8568E+00	1.4421E+00	1.4792E+00	0.638E+00
Pa-234	F	3.6464E-01	1.9510E-01	1.9556E-01	0.117E+00
Pb-210	#A	5.4785E-01	1.6072E+00	1.6073E+00	0.104E+01
Pb-212		2.6556E-01	9.8697E-02	9.9189E-02	0.772E-01
Pb-214		2.5339E-01	1.3473E-01	1.3506E-01	0.772E-01
RA-226	#B	-4.0784E-01	-1.5455E+00	-1.5456E+00	0.881E+00
Th-230	#B	1.5947E+00	8.7971E+00	8.7973E+00	0.643E+01
Th-234	A	3.4532E-01	6.4213E-01	6.4226E-01	0.666E+00
Tl-208		1.6677E-01	7.4498E-02	7.4756E-02	0.185E-01
U-235	B	4.7433E-02	6.7716E-02	6.7739E-02	0.539E-01

- All peaks for activity calculation had bad shape.
* - Activity omitted from total
& - Activity omitted from total and all peaks had bad shape.
< - MDA value printed.
A - Activity printed, but activity < MDA.
B - Activity < MDA and failed test.
C - Area < Critical level.
F - Failed fraction or key line test.
H - Halflife limit exceeded

---------- S U M M A R Y ----------

Total Activity (41.8 to 2666.6 keV) 1.0739238E+01 pCi/ g

Laboratory: New World Technology

ORTEC g v - i (3263) wan32 G53W2.03 20-FEB-2007 07:48:25 Page 1
New World Technology Spectrum name: 2N000302.An1

Sample description
Parcel B 6PBIF002-010 358g
2/19/07 09:00

Acquisition information
Start time: 20-Feb-2007 06:18:43
Live time: 2700
Real time: 2704

- -

***** S U M M A R Y O F N U C L I D E S I N S A M P L E *****

Nuclide		Time of Count Activity pCi/g	Uncertainty Counting pCi/g	2 Sigma Total pCi/g	MDA pCi/g
Ac-228		3.2136E-01	2.2261E-01	2.2293E-01	0.170E+00
AM-241	#B	-3.5993E-02	-7.9784E-01	-7.9784E-01	0.576E+00
Bi-212	F	4.5498E-01	2.9361E-01	2.9410E-01	0.179E+00
BI-214	#F	1.5733E-01	1.0633E-01	1.0649E-01	0.632E-01
CO-60	#B	-2.7088E-02	7.1770E+01	7.1770E+01	0.272E-01
Cs-137	#	3.6792E-02	4.5052E-02	4.5073E-02	0.344E-01
EU-152	F	1.1927E-01	7.2290E-02	7.2425E-02	0.100E+00
EU-154	B	3.6467E-02	7.5704E-02	7.5716E-02	0.596E-01
K-40		7.1274E+00	1.3050E+00	1.3315E+00	0.608E+00
PA-234	#F	1.4968E-01	8.2970E-02	8.3154E-02	0.748E-01
Pb-210	#C	0.0000E+00	0.0000E+00	0.0000E+00	0.000E+00
PB-212		2.9467E-01	1.2240E-01	1.2289E-01	0.851E-01
PB-214	F	2.6939E-01	1.3361E-01	1.3398E-01	0.884E-01
RA-226	#B	-4.9788E-01	-1.8927E+00	-1.8928E+00	0.932E+00
Th-230	#B	-8.6625E+00	-9.5895E+00	-9.5949E+00	0.293E+02
TH-234		4.4038E+00	3.0077E+00	3.0121E+00	0.334E+01
Tl-208	C	8.2903E-02	4.2760E-02	4.2870E-02	0.442E-01
U-235	#B	-3.0574E-02	-2.2874E-01	-2.2874E-01	0.525E-01

- All peaks for activity calculation had bad shape.
* - Activity omitted from total
& - Activity omitted from total and all peaks had bad shape.
< - MDA value printed.
A - Activity printed, but activity < MDA.
B - Activity < MDA and failed test.
C - Area < Critical level.
F - Failed fraction or key line test.
H - Halflife limit exceeded

---------- S U M M A R Y ----------

Total Activity (41.2 to 2634.2 keV) 1.2908356E+01 pCi/g

Laboratory: New World Technology

ORTEC g v - i (3263) wan32 G53W2.03 20-FEB-2007 07:16:49 Page 1
New World Technology Spectrum name: 3N000124.An1

Sample description
Parcel B 6PBIF002-011 349g
2/19/07 09:10

Acquisition information
Start time: 20-Feb-2007 06:23:22
Live time: 2700
Real time: 2704

- -

***** S U M M A R Y O F N U C L I D E S I N S A M P L E *****

Nuclide		Time of Count Activity pCi/g	Uncertainty Counting pCi/g	2 Sigma Total pCi/g	MDA pCi/g
Ac-228	#B	-8.0764E-01	-1.4868E+00	-1.4871E+00	0.308E+00
AM-241	#B	-4.7073E-02	-1.3703E+00	-1.3703E+00	0.100E+00
Bi-212	B	8.6940E-02	3.7727E-01	3.7729E-01	0.306E+00
BI-214	F	8.3314E-01	1.8883E-01	1.9135E-01	0.610E-01
CO-60	#B	-5.2066E-02	-2.3058E-01	-2.3059E-01	0.394E-01
Cs-137	#B	-5.6466E-02	-7.3060E-01	-7.3060E-01	0.547E-01
EU-152	F	1.3221E-01	1.0993E-01	1.1004E-01	0.106E+00
EU-154	C	8.3433E-02	5.7567E-02	5.7650E-02	0.778E-01
K-40		1.4608E+01	1.7805E+00	1.8612E+00	0.602E+00
PA-234	#F	2.5609E-01	3.5888E-01	3.5900E-01	0.192E+00
Pb-210	#A	1.2625E+00	2.0333E+00	2.0339E+00	0.126E+01
PB-212		2.4635E-01	1.1333E-01	1.1370E-01	0.849E-01
PB-214	F	2.5078E-01	1.5070E-01	1.5098E-01	0.123E+00
RA-226	#B	-1.1688E+00	-7.4601E+00	-7.4602E+00	0.971E+00
Th-230	F	1.5019E+01	9.4391E+00	9.4554E+00	0.844E+01
TH-234	A	7.1953E-01	7.6446E-01	7.6492E-01	0.860E+00
Tl-208	#B	-1.6334E-01	-5.2636E-01	-5.2640E-01	0.967E-01
U-235	C	7.0196E-02	6.5385E-02	6.5437E-02	0.575E-01

- All peaks for activity calculation had bad shape.
* - Activity omitted from total
& - Activity omitted from total and all peaks had bad shape.
< - MDA value printed.
A - Activity printed, but activity < MDA.
B - Activity < MDA and failed test.
C - Area < Critical level.
F - Failed fraction or key line test.
H - Halflife limit exceeded

---------- S U M M A R Y ----------

Total Activity (41.9 to 2676.4 keV) 1.5944047E+01 pCi/g

Laboratory: New World Technology

ORTEC g v - i (3263) wan32 G53W2.06 20-FEB-2007 11:11:31 Page 1
New World Technology Spectrum name: 4N000245.An1

Sample description
Parcel B 6PBIF002-012 388g
2/19/07 09:20

Acquisition information
Start time: 20-Feb-2007 06:26:43
Live time: 2700
Real time: 2704

- -

***** S U M M A R Y O F N U C L I D E S I N S A M P L E *****

Nuclide		Time of Count Activity pCi/g	Uncertainty Counting pCi/g	2 Sigma Total pCi/g	MDA pCi/g
Ac-228	F	7.0639E-01	2.1352E-01	2.1512E-01	0.782E-01
AM-241	#A	-4.5996E-02	-4.8367E-01	-4.8367E-01	0.125E+00
Bi-212	B	2.0439E-01	2.0775E-01	2.0788E-01	0.382E+00
BI-214		5.6240E-01	1.5134E-01	1.5277E-01	0.664E-01
CO-60	#B	-9.0061E-03	-6.6528E-02	-6.6529E-02	0.195E-01
CS-137	B	6.0657E-03	4.9585E-02	4.9586E-02	0.431E-01
EU-152	F	1.3724E-01	9.4310E-02	9.4446E-02	0.773E-01
EU-154	#B	5.5284E-02	5.4961E-02	5.4999E-02	0.683E-01
K-40		1.0280E+01	1.4585E+00	1.5074E+00	0.771E+00
Pa-234	B	5.4950E-02	7.0549E-02	7.0578E-02	0.118E+00
Pb-210		2.0085E+00	1.2198E+00	1.2220E+00	0.944E+00
Pb-212	F	3.6174E-01	1.0537E-01	1.0622E-01	0.774E-01
PB-214	F	3.9587E-01	1.3773E-01	1.3851E-01	0.791E-01
RA-226	B	5.8679E-01	1.2338E+00	1.2340E+00	0.107E+01
Th-230	B	5.6029E+00	1.0591E+01	1.0593E+01	0.852E+01
Th-234	F	2.1711E+00	1.3446E+00	1.3470E+00	0.105E+01
Tl-208	F	1.3404E-01	6.3640E-02	6.3834E-02	0.648E-01
U-235	#B	-1.2733E+00	-4.1464E+00	-4.1467E+00	0.130E+00

- All peaks for activity calculation had bad shape.
* - Activity omitted from total
& - Activity omitted from total and all peaks had bad shape.
< - MDA value printed.
A - Activity printed, but activity < MDA.
B - Activity < MDA and failed test.
C - Area < Critical level.
F - Failed fraction or key line test.
H - Halflife limit exceeded

---------- S U M M A R Y ----------

Total Activity (42.8 to 3401.4 keV) 1.6486198E+01 pCi/g

Laboratory: New World Technology

ORTEC g v - i (3263) wan32 G53W2.06 20-FEB-2007 07:24:27 Page 1
New World Technology Spectrum name: 5N000274.An1

Sample description
Parcel B 6PBIF002-013 392g
2/19/07 09:30

Acquisition information
Start time: 20-Feb-2007 06:39:16
Live time: 2700
Real time: 2703

- -

***** S U M M A R Y O F N U C L I D E S I N S A M P L E *****

Nuclide		Time of Count Activity pCi/g	Uncertainty Counting pCi/g	2 Sigma Total pCi/g	MDA pCi/g
Ac-228	#B	1.1548E-01	1.8850E-01	1.8855E-01	0.168E+00
AM-241	#B	-1.3284E-01	-1.9513E+00	-1.9513E+00	0.885E-01
Bi-212	F	5.3828E-01	3.2573E-01	3.2635E-01	0.201E+00
BI-214	F	5.3509E-01	2.6071E-01	2.6147E-01	0.118E+00
CO-60	#B	-9.3395E-03	-4.4110E-02	-4.4111E-02	0.172E-01
CS-137	#B	-4.9627E-02	-2.4427E+00	-2.4427E+00	0.400E-01
EU-152	B	7.3636E-02	7.9405E-02	7.9452E-02	0.826E-01
EU-154	B	3.5921E-02	6.7078E-02	6.7092E-02	0.565E-01
K-40		8.0837E+00	1.3121E+00	1.3460E+00	0.760E+00
Pa-234	F	2.5895E-01	1.3002E-01	1.3037E-01	0.106E+00
Pb-210		1.3416E+00	1.0712E+00	1.0724E+00	0.757E+00
Pb-212	F	1.9793E-01	9.4737E-02	9.5022E-02	0.793E-01
PB-214	#F	3.4075E-01	1.4390E-01	1.4445E-01	0.772E-01
RA-226	#B	-6.0991E-02	-1.0204E+00	-1.0204E+00	0.842E+00
Th-230	#B	-1.0477E+01	-6.7230E+01	-6.7231E+01	0.905E+01
Th-234	F	1.6195E+00	4.7812E-01	4.8185E-01	0.760E+00
Tl-208		1.2075E-01	4.5630E-02	4.5850E-02	0.569E-01
U-235	#B	-8.0666E-01	-2.2714E+00	-2.2716E+00	0.991E-01

- All peaks for activity calculation had bad shape.
* - Activity omitted from total
& - Activity omitted from total and all peaks had bad shape.
< - MDA value printed.
A - Activity printed, but activity < MDA.
B - Activity < MDA and failed test.
C - Area < Critical level.
F - Failed fraction or key line test.
H - Halflife limit exceeded

---------- S U M M A R Y ----------

Total Activity (41.8 to 2665.6 keV) 1.1417101E+01 pCi/g

Laboratory: New World Technology

ORTEC g v - i (3263) wan32 G53W2.06 20-FEB-2007 11:12:41 Page 1
New World Technology Spectrum name: 4N000246.An1

Sample description
Parcel B 6PBIF002-014 345g
2/19/07 09:40

Acquisition information
Start time: 20-Feb-2007 07:28:57
Live time: 2700
Real time: 2703

- -

***** S U M M A R Y O F N U C L I D E S I N S A M P L E *****

Nuclide		Time of Count Activity pCi/g	Uncertainty Counting pCi/g	2 Sigma Total pCi/g	MDA pCi/g
Ac-228	F	7.6814E-01	1.9403E-01	1.9610E-01	0.327E-01
AM-241	A	1.0344E-01	1.6022E-01	1.6026E-01	0.132E+00
Bi-212	B	1.6168E-01	3.0284E-01	3.0290E-01	0.394E+00
BI-214		5.6577E-01	1.1419E-01	1.1610E-01	0.300E-01
CO-60	#B	-1.2431E-02	6.4591E+01	6.4591E+01	0.176E-01
CS-137	B	2.4682E-02	5.0591E-02	5.0600E-02	0.427E-01
EU-152	F	1.8702E-01	9.0717E-02	9.0980E-02	0.104E+00
EU-154	F	1.7555E-01	7.6654E-02	7.6928E-02	0.580E-01
K-40		1.0083E+01	1.5547E+00	1.5990E+00	0.867E+00
Pa-234	F	3.3518E-01	1.3683E-01	1.3739E-01	0.141E+00
Pb-210		4.0421E+00	2.5975E+00	2.6018E+00	0.917E+00
Pb-212	F	4.9287E-01	1.1844E-01	1.1984E-01	0.740E-01
PB-214	F	5.5978E-01	1.3557E-01	1.3715E-01	0.456E-01
RA-226		1.2909E+00	1.1893E+00	1.1903E+00	0.102E+01
Th-230	B	4.4301E+00	1.0461E+01	1.0462E+01	0.844E+01
Th-234	F	2.4721E+00	1.3445E+00	1.3476E+00	0.112E+01
Tl-208	#F	1.9182E-01	5.2121E-02	5.2604E-02	0.451E-01
U-235	B	-1.3763E+00	-2.3038E+00	-2.3044E+00	0.146E+00

- All peaks for activity calculation had bad shape.
* - Activity omitted from total
& - Activity omitted from total and all peaks had bad shape.
< - MDA value printed.
A - Activity printed, but activity < MDA.
B - Activity < MDA and failed test.
C - Area < Critical level.
F - Failed fraction or key line test.
H - Halflife limit exceeded

---------- S U M M A R Y ----------

Total Activity (42.8 to 3401.4 keV) 2.0466312E+01 pCi/g

Laboratory: New World Technology

ORTEC g v - i (3263) wan32 G53W2.06 20-FEB-2007 07:32:27 Page 1
New World Technology Spectrum name: 7N000179.An1

Sample description
Parcel B 6PBIF002-015 299g
2/19/07 09:50

Acquisition information
Start time: 20-Feb-2007 06:47:14
Live time: 2700
Real time: 2706

- -

***** S U M M A R Y O F N U C L I D E S I N S A M P L E *****

Nuclide		Time of Count Activity pCi/g	Uncertainty Counting pCi/g	2 Sigma Total pCi/g	MDA pCi/g
AC-228	F	1.3009E+00	4.1486E-01	4.1766E-01	0.146E+00
AM-241	B	1.5464E-02	1.9297E-01	1.9297E-01	0.161E+00
BI-212	#B	-2.3238E-01	1.2418E+03	1.2418E+03	0.536E+00
BI-214	F	5.6421E-01	1.5882E-01	1.6019E-01	0.944E-01
CO-60	#B	2.0558E-03	4.8213E-02	4.8213E-02	0.557E-01
CS-137	B	6.7844E-03	6.3255E-02	6.3255E-02	0.583E-01
EU-152	#F	3.1666E-01	1.0411E-01	1.0477E-01	0.133E+00
EU-154	F	9.9861E-02	9.0725E-02	9.0801E-02	0.751E-01
K-40		1.3009E+01	2.0190E+00	2.0760E+00	0.109E+01
PA-234	F	2.5643E-01	1.6890E-01	1.6917E-01	0.122E+00
PB-210		3.1902E+00	2.7951E+00	2.7976E+00	0.169E+01
PB-212	F	5.6096E-01	1.3103E-01	1.3268E-01	0.896E-01
PB-214		4.4954E-01	2.2110E-01	2.2173E-01	0.134E+00
RA-226	#B	-1.3724E+00	-5.0915E+00	-5.0917E+00	0.119E+01
Th-230	#B	-2.2251E+00	-2.3766E+01	-2.3767E+01	0.132E+02
TH-234	#B	-6.9451E-01	-2.1207E+00	-2.1209E+00	0.125E+01
TL-208	F	1.4212E-01	7.5986E-02	7.6169E-02	0.570E-01
U-235	B	-7.7959E-01	-2.0365E+00	-2.0367E+00	0.113E+00

- All peaks for activity calculation had bad shape.
* - Activity omitted from total
& - Activity omitted from total and all peaks had bad shape.
< - MDA value printed.
A - Activity printed, but activity < MDA.
B - Activity < MDA and failed test.
C - Area < Critical level.
F - Failed fraction or key line test.
H - Halflife limit exceeded

---------- S U M M A R Y ----------

Total Activity (42.1 to 2687.4 keV) 1.9074280E+01 pCi/g

Laboratory: New World Technology

ORTEC g v - i (3263) wan32 G53W2.06 19-FEB-2007 14:50:28 Page 1
New World Technology Spectrum name: 6N000207.An1

Sample description
Parcel B 6PBIF002-016 318g
2/19/07 10:00

Acquisition information
Start time: 19-Feb-2007 14:05:19
Live time: 2700
Real time: 2702

- -

***** S U M M A R Y O F N U C L I D E S I N S A M P L E *****

Nuclide		Time of Count Activity pCi/g	Uncertainty Counting pCi/g	2 Sigma Total pCi/g	MDA pCi/g
Ac-228	F	7.8796E-01	2.6007E-01	2.6170E-01	0.250E+00
AM-241	A	2.3655E-02	1.7809E-01	1.7809E-01	0.149E+00
Bi-212	#B	-2.8048E-02	-2.8048E-02	-2.8067E-02	0.502E+00
BI-214	F	6.4851E-01	2.7219E-01	2.7325E-01	0.130E+00
CO-60	#B	1.3943E-02	8.1689E-02	8.1691E-02	0.678E-01
CS-137	#B	-3.5414E-03	-7.0402E-02	-7.0402E-02	0.593E-01
EU-152	B	6.9507E-02	1.1021E-01	1.1024E-01	0.122E+00
EU-154	F	1.2881E-01	1.2462E-01	1.2471E-01	0.715E-01
K-40		1.6235E+01	2.3026E+00	2.3801E+00	0.116E+01
Pa-234	F	2.4621E-01	1.6792E-01	1.6817E-01	0.126E+00
Pb-210	#	3.3914E+00	1.6404E+00	1.6452E+00	0.105E+01
Pb-212	F	4.3292E-01	1.0489E-01	1.0611E-01	0.765E-01
PB-214		2.0617E+00	1.6631E+00	1.6648E+00	0.107E+01
RA-226	B	6.5809E-01	1.1410E+00	1.1413E+00	0.996E+00
Th-230	#B	-7.9620E+00	-3.5470E+01	-3.5472E+01	0.112E+02
Th-234	B	7.8409E-01	1.3361E+00	1.3364E+00	0.116E+01
Tl-208	F	2.0573E-01	8.3036E-02	8.3386E-02	0.526E-01
U-235	#B	-3.4939E-01	-3.8442E-01	-3.8463E-01	0.918E-01

- All peaks for activity calculation had bad shape.
* - Activity omitted from total
& - Activity omitted from total and all peaks had bad shape.
< - MDA value printed.
A - Activity printed, but activity < MDA.
B - Activity < MDA and failed test.
C - Area < Critical level.
F - Failed fraction or key line test.
H - Halflife limit exceeded

---------- S U M M A R Y ----------

Total Activity (41.1 to 2612.9 keV) 2.4009892E+01 pCi/g

Laboratory: New World Technology

ORTEC g v - i (3263) wan32 G53W2.06 20-FEB-2007 08:23:57 Page 1
New World Technology Spectrum name: 5N000275.An1

Sample description
Parcel B 6PBIF002-017 304g
2/19/07 10:10

Acquisition information
Start time: 20-Feb-2007 07:38:47
Live time: 2700
Real time: 2703

- -

***** S U M M A R Y O F N U C L I D E S I N S A M P L E *****

Nuclide		Time of Count Activity pCi/g	Uncertainty Counting pCi/g	2 Sigma Total pCi/g	MDA pCi/g
Ac-228		5.4375E-01	3.3763E-01	3.3823E-01	0.224E+00
AM-241	#B	-1.8823E-01	3.1265E+02	3.1265E+02	0.135E+00
Bi-212	F	8.6981E-01	4.5179E-01	4.5295E-01	0.269E+00
BI-214	F	3.3276E-01	1.8116E-01	1.8158E-01	0.132E+00
CO-60	#B	1.3116E-02	1.4620E-02	1.4628E-02	0.222E-01
CS-137	B	2.6944E-02	5.8808E-02	5.8817E-02	0.524E-01
EU-152	F	2.0165E-01	9.5059E-02	9.5351E-02	0.893E-01
EU-154	F	1.4602E-01	1.5317E-01	1.5326E-01	0.586E-01
K-40	#	9.3386E+00	1.6243E+00	1.6609E+00	0.980E+00
Pa-234	F	3.7106E-01	1.5898E-01	1.5957E-01	0.102E+00
Pb-210	#B	-1.0618E+00	-2.0421E+01	-2.0421E+01	0.119E+01
Pb-212	F	3.2413E-01	1.2505E-01	1.2563E-01	0.102E+00
PB-214	F	5.8530E-01	1.9811E-01	1.9930E-01	0.101E+00
RA-226	#B	-4.3449E-01	-2.0099E+00	-2.0100E+00	0.112E+01
Th-230	#B	-1.0253E+01	-5.3315E+01	-5.3317E+01	0.111E+02
Th-234	F	1.2898E+00	7.5325E-01	7.5476E-01	0.102E+01
Tl-208	F	2.2509E-01	6.0210E-02	6.0788E-02	0.733E-01
U-235	#B	-1.0312E+00	-2.7082E+00	-2.7085E+00	0.130E+00

- All peaks for activity calculation had bad shape.
* - Activity omitted from total
& - Activity omitted from total and all peaks had bad shape.
< - MDA value printed.
A - Activity printed, but activity < MDA.
B - Activity < MDA and failed test.
C - Area < Critical level.
F - Failed fraction or key line test.
H - Halflife limit exceeded

---------- S U M M A R Y ----------

Total Activity (41.8 to 2665.6 keV) 1.2219432E+01 pCi/g

Laboratory: New World Technology

ORTEC g v - i (3263) wan32 G53W2.06 20-FEB-2007 08:24:57 Page 1
New World Technology Spectrum name: 7N000180.An1

Sample description
Parcel B 6PBIF002-018 311g
2/19/07 10:20

Acquisition information
Start time: 20-Feb-2007 07:39:45
Live time: 2700
Real time: 2706

- -

***** S U M M A R Y O F N U C L I D E S I N S A M P L E *****

Nuclide		Time of Count Activity pCi/g	Uncertainty Counting pCi/g	2 Sigma Total pCi/g	MDA pCi/g
AC-228	F	9.5561E-01	2.6115E-01	2.6355E-01	0.122E+00
AM-241		2.2983E-01	1.8673E-01	1.8693E-01	0.149E+00
BI-212	F	4.7338E-01	5.4109E-01	5.4138E-01	0.425E+00
BI-214	#F	8.3005E-01	1.9390E-01	1.9634E-01	0.753E-01
CO-60	#B	-1.0278E-01	-6.4371E-01	-6.4372E-01	0.550E-01
CS-137	#B	-7.1788E-02	-2.8724E+00	-2.8724E+00	0.593E-01
EU-152	F	1.9897E-01	9.9161E-02	9.9436E-02	0.127E+00
EU-154	F	1.3450E-01	8.8083E-02	8.8225E-02	0.727E-01
K-40		1.5899E+01	2.0830E+00	2.1651E+00	0.104E+01
PA-234	F	1.5394E-01	2.1145E-01	2.1152E-01	0.133E+00
PB-210		2.6269E+00	2.3594E+00	2.3614E+00	0.151E+01
PB-212	F	4.3988E-01	1.2645E-01	1.2750E-01	0.919E-01
PB-214		3.0051E-01	1.5387E-01	1.5427E-01	0.121E+00
RA-226	B	1.2599E-01	1.3826E+00	1.3826E+00	0.122E+01
Th-230	#B	-1.1326E+01	-7.4271E+01	-7.4272E+01	0.138E+02
TH-234	B	4.5470E-01	1.3986E+00	1.3987E+00	0.123E+01
TL-208	F	4.2739E-01	1.2191E-01	1.2294E-01	0.332E-01
U-235	#B	-7.4452E-01	-2.1812E+00	-2.1813E+00	0.116E+00

- All peaks for activity calculation had bad shape.
* - Activity omitted from total
& - Activity omitted from total and all peaks had bad shape.
< - MDA value printed.
A - Activity printed, but activity < MDA.
B - Activity < MDA and failed test.
C - Area < Critical level.
F - Failed fraction or key line test.
H - Halflife limit exceeded

---------- S U M M A R Y ----------

Total Activity (42.1 to 2687.4 keV) 2.1708801E+01 pCi/g

Laboratory: New World Technology

STRONTIUM-90 ANALYSIS REPORT

Count Date:	2/27/2007	Instrument ID:	Protean WPC 9550	Count Time:	30 min
Batch ID:	NWTLAB022707-014	Detector ID:	0615608	^{90}Y Eff.:	31.1%
Performed By:	P Smith	Cal Due Date:	9/27/2007	^{90}Sr Eff.:	26.9%
				^{90}Sr Added:	10 mg

Sample ID	Collected m/dd/yy hh:mm	^{90}Y in-growth m/dd/yy hh:mm	Counted m/dd/yy hh:mm	Aliquot Mass grams	Initial Mass grams	Final Mass grams	^{90}Sr Yield percent	Total CPM	Total Counts	^{90}Sr Activity pCi/g	MDC pCi/g	2 σ Uncert. pCi/g
6PBIF002-006	2/19/07 8:20	2/27/07 11:14	2/27/07 23:27	10	9.4044	9.4159	103.0%	0.533	16	-0.003	0.068	0.034
6PBIF002-016	2/19/07 10:00	2/27/07 11:14	2/27/07 23:57	10	9.4294	9.4404	98.0%	0.733	22	0.016	0.072	0.080
Method Spike 3.49	2/26/07 7:00	2/27/07 11:14	2/28/07 6:02	10	9.4284	9.4392	96.0%	22.067	662	3.532	0.121	1.524
Blank	2/26/07 7:00	2/27/07 11:15	2/28/07 6:33	10	9.3939	9.3951		0.567	17			

ATTACHMENT 2

REFERENCE AREA SAMPLE RESULTS

This page intentionally left blank.

ORTEC g v - i (3263) wan32 G53W2.03 04-AUG-2006 13:51:39 Page 1
New World Technology Spectrum name: 2N002311.An1

Sample description
IRO7 Bkd 06NPBRAO-001 503g
04/26/2006 12:00

Acquisition information
Start time: 02-May-2006 17:16:40
Live time: 2700
Real time: 2704

- -

***** S U M M A R Y O F N U C L I D E S I N S A M P L E *****

Nuclide		Activity picoCi/g	Time of Count Uncertainty Counting picoCi/g	2 Sigma Total picoCi/g	MDA picoCi/g
Ac-228		5.3085E-01	1.7695E-01	1.7804E-01	0.119E+00
AM-241	#B	-3.2550E-01	-2.9695E+00	-2.9695E+00	0.438E+00
Bi-212	#B	-2.4844E-02	-3.1479E-01	-3.1479E-01	0.155E+00
BI-214	F	4.1896E-01	1.3743E-01	1.3831E-01	0.762E-01
CO-60	#B	-1.9533E-02	5.1754E+01	5.1754E+01	0.196E-01
Cs-137	#B	-2.8939E-03	-4.2883E-02	-4.2883E-02	0.384E-01
EU-152	F	1.1377E-01	8.0020E-02	8.0131E-02	0.664E-01
EU-154	B	-5.1125E-04	1.3019E+02	1.3019E+02	0.475E-01
K-40		1.1094E+01	1.3139E+00	1.3768E+00	0.433E+00
PA-234	#	1.5654E-01	1.0555E-01	1.0571E-01	0.122E+00
Pb-210	#F	0.0000E+00	0.0000E+00	0.0000E+00	0.000E+00
PB-212	F	3.5349E-01	9.2961E-02	9.3880E-02	0.646E-01
PB-214		4.4479E-01	1.3876E-01	1.3974E-01	0.791E-01
RA-226	A	2.0198E-01	8.1257E-01	8.1261E-01	0.700E+00
Th-230	B	-8.2745E+00	-9.1643E+00	-9.1694E+00	0.215E+02
TH-234	A	2.1431E+00	3.3507E+00	3.3516E+00	0.235E+01
Tl-208	C	1.0572E-01	3.5512E-02	3.5728E-02	0.239E-01
U-235	#B	2.7607E-02	4.5695E-02	4.5707E-02	0.416E-01

- All peaks for activity calculation had bad shape.
* - Activity omitted from total
& - Activity omitted from total and all peaks had bad shape.
< - MDA value printed.
A - Activity printed, but activity < MDA.
B - Activity < MDA and failed test.
C - Area < Critical level.
F - Failed fraction or key line test.
H - Halflife limit exceeded

---------- S U M M A R Y ----------

Total Activity (41.9 to 2675.6 keV) 1.2998281E+01 picoCi/g

Laboratory: New World Technology

ORTEC g v - i (3263) wan32 G53W2.06 04-AUG-2006 11:53:26 Page 1
New World Technology Spectrum name: 1N001774.An1

Sample description
IR07 Bkd 06NPBRAO-002 532g
4/26/06 12:00

Acquisition information
Start time: 02-May-2006 17:21:48
Live time: 2700
Real time: 2703

- -

***** S U M M A R Y O F N U C L I D E S I N S A M P L E *****

Nuclide		Activity picoCi/ g	Time of Count Uncertainty picoCi/ g	2 Sigma Counting picoCi/ g	Total picoCi/ g	MDA picoCi/ g
Ac-228		6.0566E-01	1.8261E-01	1.8399E-01	0.326E-01	
AM-241	#A	-1.4682E-01	4.3983E+02	4.3983E+02	0.166E+00	
Bi-212	A	2.1957E-01	2.9477E-01	2.9489E-01	0.220E+00	
BI-214	F	5.3893E-01	1.8584E-01	1.8691E-01	0.204E+00	
CO-60	#A	-2.4633E-02	-1.0973E-01	-1.0973E-01	0.303E-01	
CS-137	#A	-6.2824E-02	-2.6540E-01	-2.6541E-01	0.441E-01	
EU-152	C	8.8401E-02	6.6183E-02	6.6264E-02	0.594E-01	
EU-154	A	-3.0407E-03	-2.2960E-02	-2.2960E-02	0.469E-01	
K-40		6.6737E+00	1.3621E+00	1.3844E+00	0.685E+00	
Pa-234	#B	1.1698E-02	1.3292E-02	1.3299E-02	0.967E-01	
Pb-210	#	7.5060E+00	9.1825E+00	9.1867E+00	0.577E+01	
Pb-212		3.9365E-01	8.2014E-02	8.3302E-02	0.423E-01	
Pb-214		4.9218E-01	1.2268E-01	1.2403E-01	0.517E-01	
RA-226	A	2.3013E-01	7.4019E-01	7.4024E-01	0.641E+00	
Th-230	#B	1.0416E+01	1.8038E+01	1.8042E+01	0.122E+02	
Th-234	B	-1.6585E+00	3.2498E+03	3.2498E+03	0.111E+01	
Tl-208	#	1.6399E-01	5.9592E-02	5.9901E-02	0.237E-01	
U-235	C	4.2276E-02	4.8816E-02	4.8841E-02	0.408E-01	

- All peaks for activity calculation had bad shape.
* - Activity omitted from total
& - Activity omitted from total and all peaks had bad shape.
< - MDA value printed.
A - Activity printed, but activity < MDA.
B - Activity < MDA and failed test.
C - Area < Critical level.
F - Failed fraction or key line test.
H - Halflife limit exceeded

---------- S U M M A R Y ----------

Total Activity (41.2 to 2606.4 keV) 1.5835150E+01 picoCi/ g

Laboratory: New World Technology

ORTEC g v - i (3263) wan32 G53W2.03 04-AUG-2006 12:36:09 Page 1
New World Technology Spectrum name: 3N002316.An1

Sample description
IR07 Bkd 06NPBRAO-003 509g
4/26/2006 12:00

Acquisition information
Start time: 02-May-2006 17:27:21
Live time: 2700
Real time: 2702

- -

***** S U M M A R Y O F N U C L I D E S I N S A M P L E *****

Nuclide		Time of Count Activity picoCi/g	Uncertainty Counting picoCi/g	2 Sigma Total picoCi/g	MDA picoCi/g
Ac-228	F	5.8777E-01	2.0588E-01	2.0703E-01	0.129E+00
AM-241	#B	-3.9466E-02	1.7505E+02	1.7505E+02	0.662E-01
Bi-212	F	5.8549E-01	3.2906E-01	3.2977E-01	0.212E+00
BI-214	F	4.1106E-01	1.4854E-01	1.4932E-01	0.864E-01
CO-60	#B	-1.2140E-03	-5.3193E-03	-5.3195E-03	0.229E-01
Cs-137	#B	-3.4603E-02	-2.1850E-01	-2.1850E-01	0.355E-01
EU-152	B	6.2825E-02	1.3437E-01	1.3439E-01	0.639E-01
EU-154	#B	-1.3150E-02	-2.2705E-01	-2.2705E-01	0.411E-01
K-40		9.5428E+00	1.4247E+00	1.4680E+00	0.859E+00
PA-234	#B	-5.3199E-03	-9.6429E-02	-9.6430E-02	0.727E-01
Pb-210	A	4.0222E-01	1.0453E+00	1.0455E+00	0.785E+00
PB-212	F	2.7998E-01	8.1115E-02	8.1776E-02	0.580E-01
PB-214		4.0663E-01	1.2430E-01	1.2521E-01	0.892E-01
RA-226	A	2.1928E-01	7.2598E-01	7.2603E-01	0.633E+00
Th-230	#B	2.0049E+00	3.3965E+00	3.3973E+00	0.626E+01
TH-234	B	2.3801E-01	7.0143E-01	7.0148E-01	0.546E+00
Tl-208	B	4.8425E-02	2.2114E-02	2.2187E-02	0.893E-01
U-235	A	2.4919E-02	5.9418E-02	5.9425E-02	0.348E-01

- All peaks for activity calculation had bad shape.
* - Activity omitted from total
& - Activity omitted from total and all peaks had bad shape.
< - MDA value printed.
A - Activity printed, but activity < MDA.
B - Activity < MDA and failed test.
C - Area < Critical level.
F - Failed fraction or key line test.
H - Halflife limit exceeded

---------- S U M M A R Y ----------

Total Activity (41.7 to 2660.5 keV) 1.1813709E+01 picoCi/g

Laboratory: New World Technology

ORTEC g v - i (3263) wan32 G53W2.03 04-AUG-2006 12:22:30 Page 1
New World Technology Spectrum name: 2N002312.An1

Sample description
IRO7 Bkd 06NPBRAO-004 524g
04/26/2006 12:00

Acquisition information
Start time: 02-May-2006 18:06:18
Live time: 2700
Real time: 2704

- -

***** S U M M A R Y O F N U C L I D E S I N S A M P L E *****

Nuclide		Activity picoCi/g	Time of Count Uncertainty picoCi/g	2 Sigma Total picoCi/g	MDA picoCi/g
Ac-228		3.6533E-01	1.3352E-01	1.3421E-01	0.128E+00
AM-241	#B	-3.2394E-01	-4.0538E+00	-4.0538E+00	0.505E+00
Bi-212	F	5.1371E-01	2.4124E-01	2.4199E-01	0.125E+00
BI-214	F	4.5513E-01	1.2737E-01	1.2849E-01	0.683E-01
CO-60	#B	-1.0764E-02	-4.7946E-02	-4.7948E-02	0.200E-01
Cs-137	A	2.7839E-02	3.5934E-02	3.5949E-02	0.328E-01
EU-152	F	1.1407E-01	9.2399E-02	9.2495E-02	0.688E-01
EU-154	F	7.5043E-02	6.6698E-02	6.6756E-02	0.599E-01
K-40	#	8.6566E+00	1.1476E+00	1.1916E+00	0.416E+00
PA-234	#F	1.4227E-01	1.0653E-01	1.0666E-01	0.466E-01
Pb-210	#F	0.0000E+00	0.0000E+00	0.0000E+00	0.000E+00
PB-212		3.6228E-01	8.6884E-02	8.7917E-02	0.584E-01
PB-214		3.1240E-01	1.2677E-01	1.2730E-01	0.693E-01
RA-226	A	1.9802E-01	8.8511E-01	8.8514E-01	0.773E+00
Th-230	#B	-1.8344E+01	-1.5402E+02	-1.5403E+02	0.237E+02
TH-234	A	5.7145E-01	2.0058E+00	2.0059E+00	0.168E+01
Tl-208	#C	9.0736E-02	3.3043E-02	3.3214E-02	0.369E-01
U-235	B	5.2203E-03	4.2264E-02	4.2264E-02	0.367E-01

- All peaks for activity calculation had bad shape.
* - Activity omitted from total
& - Activity omitted from total and all peaks had bad shape.
< - MDA value printed.
A - Activity printed, but activity < MDA.
B - Activity < MDA and failed test.
C - Area < Critical level.
F - Failed fraction or key line test.
H - Halflife limit exceeded

---------- S U M M A R Y ----------

Total Activity (41.9 to 2675.6 keV) 1.0740554E+01 picoCi/g

Laboratory: New World Technology

ORTEC g v - i (3263) wan32 G53W2.06 04-AUG-2006 11:54:24 Page 1
New World Technology Spectrum name: 1N001775.An1

Sample description
IR07 Bkd 06NPBRAO-005 536g
4/26/06 12:00

Acquisition information
Start time: 02-May-2006 18:12:35
Live time: 2700
Real time: 2703

- -

***** S U M M A R Y O F N U C L I D E S I N S A M P L E *****

Nuclide		Activity picoCi/ g	Time of Count Uncertainty Counting picoCi/ g	2 Sigma Total picoCi/ g	MDA picoCi/ g
Ac-228		5.1248E-01	1.9033E-01	1.9127E-01	0.324E-01
AM-241	#A	-1.0306E-01	-8.8776E-01	-8.8777E-01	0.146E+00
Bi-212	#	5.5007E-01	4.5627E-01	4.5673E-01	0.220E+00
BI-214	#F	6.7785E-01	2.1820E-01	2.1964E-01	0.165E+00
CO-60	#	3.1117E-02	3.6858E-02	3.6876E-02	0.301E-01
CS-137	#A	-4.9038E-02	-1.2360E-01	-1.2361E-01	0.419E-01
EU-152	C	1.7067E-01	9.8622E-02	9.8824E-02	0.532E-01
EU-154	#A	-2.5624E-02	9.6697E+01	9.6697E+01	0.366E-01
K-40		8.3079E+00	1.4852E+00	1.5168E+00	0.680E+00
Pa-234	#B	-9.1965E-02	-9.1965E-02	-9.2028E-02	0.777E-01
Pb-210	#A	4.0797E+00	6.5894E+00	6.5911E+00	0.471E+01
Pb-212	F	3.6176E-01	7.9025E-02	8.0155E-02	0.437E-01
Pb-214		4.1537E-01	1.2336E-01	1.2431E-01	0.509E-01
RA-226	A	2.9619E-01	7.5401E-01	7.5409E-01	0.647E+00
Th-230	#B	4.3692E+00	1.4466E+01	1.4467E+01	0.104E+02
Th-234	A	4.4079E-01	5.3839E-01	5.3864E-01	0.117E+01
Tl-208		1.9605E-01	5.9269E-02	5.9713E-02	0.186E-01
U-235	A	3.5350E-02	4.9029E-02	4.9046E-02	0.396E-01

- All peaks for activity calculation had bad shape.
* - Activity omitted from total
& - Activity omitted from total and all peaks had bad shape.
< - MDA value printed.
A - Activity printed, but activity < MDA.
B - Activity < MDA and failed test.
C - Area < Critical level.
F - Failed fraction or key line test.
H - Halflife limit exceeded

---------- S U M M A R Y ----------

Total Activity (41.2 to 2606.4 keV) 1.1052633E+01 picoCi/ g

Laboratory: New World Technology

ORTEC g v - i (3263) wan32 G53W2.03 04-AUG-2006 12:36:56 Page 1
New World Technology Spectrum name: 3N002317.An1

Sample description
IR07 Bkd 06NPBRAO-006 515g
4/26/2006 12:00

Acquisition information
Start time: 02-May-2006 18:16:16
Live time: 2700
Real time: 2702

- -

***** S U M M A R Y O F N U C L I D E S I N S A M P L E *****

Nuclide		Time of Count Activity picoCi/g	Uncertainty Counting picoCi/g	2 Sigma Total picoCi/g	MDA picoCi/g
Ac-228	#B	9.1408E-02	6.6956E-02	6.7042E-02	0.162E+00
AM-241	#A	2.9375E-02	1.1726E-01	1.1726E-01	0.828E-01
Bi-212	F	4.7535E-01	2.8637E-01	2.8692E-01	0.182E+00
BI-214	F	2.6587E-01	1.0777E-01	1.0822E-01	0.875E-01
CO-60	#C	3.0235E-02	1.9768E-02	1.9800E-02	0.213E-01
Cs-137	#B	-1.3240E-02	-6.6242E-02	-6.6244E-02	0.361E-01
EU-152	B	2.9726E-02	7.3033E-02	7.3041E-02	0.632E-01
EU-154	B	4.0297E-02	3.9583E-02	3.9611E-02	0.468E-01
K-40		6.8823E+00	1.3707E+00	1.3943E+00	0.989E+00
PA-234	B	6.0253E-02	1.4061E-01	1.4063E-01	0.905E-01
Pb-210	#	8.8394E-01	1.0566E+00	1.0571E+00	0.769E+00
PB-212		3.3519E-01	8.0879E-02	8.1828E-02	0.550E-01
PB-214		3.2928E-01	1.3770E-01	1.3824E-01	0.849E-01
RA-226	A	5.6925E-01	7.1792E-01	7.1823E-01	0.609E+00
Th-230	B	-3.5254E+00	-6.3742E+00	-6.3755E+00	0.583E+01
TH-234		6.4779E-01	7.1868E-01	7.1908E-01	0.622E+00
Tl-208	#	1.8114E-01	8.4323E-02	8.4590E-02	0.652E-01
U-235	#B	8.7465E-03	1.3239E-02	1.3243E-02	0.359E-01

- All peaks for activity calculation had bad shape.
* - Activity omitted from total
& - Activity omitted from total and all peaks had bad shape.
< - MDA value printed.
A - Activity printed, but activity < MDA.
B - Activity < MDA and failed test.
C - Area < Critical level.
F - Failed fraction or key line test.
H - Halflife limit exceeded

---------- S U M M A R Y ----------

Total Activity (41.7 to 2660.5 keV) 1.0000830E+01 picoCi/g

Laboratory: New World Technology

ORTEC g v - i (3263) wan32 G53W2.03 04-AUG-2006 14:35:02 Page 1
New World Technology Spectrum name: 2N002313.An1

Sample description
IRO7 Bkd 06NPBRAO-007 513g
04/26/2006 12:00

Acquisition information
Start time: 02-May-2006 18:57:00
Live time: 2700
Real time: 2704

- -

***** S U M M A R Y O F N U C L I D E S I N S A M P L E *****

Nuclide		Activity picoCi/g	Time of Count Uncertainty Counting picoCi/g	2 Sigma Total picoCi/g	MDA picoCi/g
Ac-228		4.4365E-01	1.8746E-01	1.8818E-01	0.138E+00
AM-241	A	1.4677E-01	6.6710E-01	6.6712E-01	0.517E+00
Bi-212	F	4.7093E-01	2.9803E-01	2.9854E-01	0.196E+00
BI-214	F	4.2261E-01	1.3489E-01	1.3580E-01	0.705E-01
CO-60	#B	-1.7734E-02	-8.0138E-02	-8.0140E-02	0.202E-01
Cs-137		5.7073E-02	4.0049E-02	4.0105E-02	0.330E-01
EU-152	F	1.1781E-01	1.0195E-01	1.0204E-01	0.768E-01
EU-154	B	7.4141E-03	5.3970E-02	5.3970E-02	0.439E-01
K-40		1.0386E+01	1.2612E+00	1.3187E+00	0.425E+00
PA-234	#F	1.1627E-01	1.0047E-01	1.0056E-01	0.507E-01
Pb-210	#F	0.0000E+00	0.0000E+00	0.0000E+00	0.000E+00
PB-212	F	3.8071E-01	8.8816E-02	8.9931E-02	0.591E-01
PB-214		3.2301E-01	1.0194E-01	1.0264E-01	0.632E-01
RA-226		7.6702E-01	8.3893E-01	8.3942E-01	0.669E+00
Th-230	B	-2.8833E-01	-3.5260E-01	-3.5276E-01	0.222E+02
TH-234	A	7.5636E-01	7.5616E-01	7.5667E-01	0.231E+01
Tl-208	#F	8.3345E-02	2.4966E-02	2.5157E-02	0.504E-01
U-235	B	1.9884E-02	4.8965E-02	4.8971E-02	0.413E-01

- All peaks for activity calculation had bad shape.
* - Activity omitted from total
& - Activity omitted from total and all peaks had bad shape.
< - MDA value printed.
A - Activity printed, but activity < MDA.
B - Activity < MDA and failed test.
C - Area < Critical level.
F - Failed fraction or key line test.
H - Halflife limit exceeded

---------- S U M M A R Y ----------

Total Activity (41.9 to 2675.6 keV) 1.3251163E+01 picoCi/g

Laboratory: New World Technology

ORTEC g v - i (3263) wan32 G53W2.06 04-AUG-2006 11:54:49 Page 1
New World Technology Spectrum name: 1N001776.An1

Sample description
IR07 Bkd 06NPBRAO-008 526g
4/26/06 12:00

Acquisition information
Start time: 02-May-2006 19:01:42
Live time: 2700
Real time: 2703

- -

***** S U M M A R Y O F N U C L I D E S I N S A M P L E *****

Nuclide		Time of Count Activity picoCi/ g	Uncertainty Counting picoCi/ g	2 Sigma Total picoCi/ g	MDA picoCi/ g
Ac-228		6.5890E-01	2.2763E-01	2.2894E-01	0.590E-01
AM-241	#A	-1.3002E-01	-2.8486E+00	-2.8486E+00	0.175E+00
Bi-212	C	3.6901E-01	3.1549E-01	3.1579E-01	0.193E+00
BI-214	#F	1.1870E+00	9.6864E-01	9.6964E-01	0.433E+00
CO-60	#A	-3.0576E-02	8.1011E+01	8.1011E+01	0.307E-01
CS-137	#A	-7.8591E-02	-3.5509E-01	-3.5511E-01	0.404E-01
EU-152	C	6.9810E-02	7.2226E-02	7.2272E-02	0.479E-01
EU-154	A	-4.3534E-03	-1.5986E-02	-1.5987E-02	0.334E-01
K-40	#	5.3198E+00	1.2532E+00	1.2687E+00	0.693E+00
Pa-234	#B	-7.4070E-02	-9.2238E-02	-9.2279E-02	0.764E-01
Pb-210	#A	5.7841E-01	2.5583E+00	2.5584E+00	0.244E+01
Pb-212	F	4.0034E-01	7.7750E-02	7.9154E-02	0.382E-01
Pb-214		3.1431E-01	8.8359E-02	8.9124E-02	0.387E-01
RA-226		6.2066E-01	7.1466E-01	7.1503E-01	0.597E+00
Th-230	#B	1.4643E+00	1.3696E+01	1.3696E+01	0.102E+02
Th-234	B	3.6673E-02	4.6791E-02	4.6811E-02	0.128E+01
Tl-208	#	1.2339E-01	5.2188E-02	5.2388E-02	0.240E-01
U-235	A	2.1901E-02	3.1019E-02	3.1030E-02	0.439E-01

- All peaks for activity calculation had bad shape.
* - Activity omitted from total
& - Activity omitted from total and all peaks had bad shape.
< - MDA value printed.
A - Activity printed, but activity < MDA.
B - Activity < MDA and failed test.
C - Area < Critical level.
F - Failed fraction or key line test.
H - Halflife limit exceeded

---------- S U M M A R Y ----------

Total Activity (41.2 to 2606.4 keV) 8.6243353E+00 picoCi/ g

Laboratory: New World Technology

ORTEC g v - i (3263) wan32 G53W2.03 04-AUG-2006 12:37:56 Page 1
New World Technology Spectrum name: 3N002318.An1

Sample description
IR07 Bkd 06NPBRAO-009 515g
4/26/2006 12:00

Acquisition information
Start time: 02-May-2006 19:05:48
Live time: 2700
Real time: 2703

- -

***** S U M M A R Y O F N U C L I D E S I N S A M P L E *****

Nuclide		Activity picoCi/g	Time of Count Uncertainty Counting picoCi/g	2 Sigma Total picoCi/g	MDA picoCi/g
Ac-228		4.7651E-01	2.6363E-01	2.6422E-01	0.151E+00
AM-241	#B	-1.4447E-03	-8.3378E-02	-8.3378E-02	0.631E-01
Bi-212	F	7.0368E-01	3.2390E-01	3.2495E-01	0.192E+00
BI-214	F	2.9895E-01	1.2410E-01	1.2459E-01	0.829E-01
CO-60	#B	-4.4676E-03	-2.7073E-02	-2.7074E-02	0.201E-01
Cs-137	#B	-2.2651E-02	-1.1475E-01	-1.1475E-01	0.387E-01
EU-152	#B	-3.1827E-03	1.2799E+02	1.2799E+02	0.451E-01
EU-154	C	7.1672E-02	4.5094E-02	4.5172E-02	0.352E-01
K-40		8.8133E+00	1.3070E+00	1.3473E+00	0.827E+00
PA-234	#B	-1.0840E-02	-4.2571E-02	-4.2573E-02	0.834E-01
Pb-210	#A	2.6658E-01	9.8469E-01	9.8474E-01	0.768E+00
PB-212		3.2530E-01	8.5065E-02	8.5916E-02	0.572E-01
PB-214		3.9513E-01	1.3030E-01	1.3112E-01	0.834E-01
RA-226	A	2.3301E-01	7.2765E-01	7.2770E-01	0.633E+00
Th-230	B	-3.5679E+00	-6.6759E+00	-6.6772E+00	0.402E+01
TH-234	A	4.4252E-01	7.5588E-01	7.5605E-01	0.595E+00
Tl-208	#	1.0276E-01	5.2853E-02	5.2991E-02	0.652E-01
U-235	#B	2.2538E-02	2.7429E-02	2.7442E-02	0.378E-01

- All peaks for activity calculation had bad shape.
* - Activity omitted from total
& - Activity omitted from total and all peaks had bad shape.
< - MDA value printed.
A - Activity printed, but activity < MDA.
B - Activity < MDA and failed test.
C - Area < Critical level.
F - Failed fraction or key line test.
H - Halflife limit exceeded

---------- S U M M A R Y ----------

Total Activity (41.7 to 2660.5 keV) 1.1115637E+01 picoCi/g

Laboratory: New World Technology

ORTEC g v - i (3263) wan32 G53W2.03 04-AUG-2006 13:55:38 Page 1
New World Technology Spectrum name: 2N002314.An1

Sample description
IRO7 Bkd 06NPBRAO-010 412g
04/26/2006 12:00

Acquisition information
Start time: 02-May-2006 19:46:42
Live time: 2700
Real time: 2704

- -

***** S U M M A R Y O F N U C L I D E S I N S A M P L E *****

Nuclide		Activity picoCi/g	Time of Count Uncertainty Counting picoCi/g	2 Sigma Total picoCi/g	MDA picoCi/g
Ac-228		5.3322E-01	2.0168E-01	2.0265E-01	0.175E+00
AM-241	#B	-1.6534E-01	-9.8782E-01	-9.8784E-01	0.486E+00
Bi-212		3.7361E-01	2.9471E-01	2.9504E-01	0.199E+00
BI-214	F	6.1252E-01	1.6125E-01	1.6284E-01	0.826E-01
CO-60	#B	-2.1640E-02	-1.0171E-01	-1.0172E-01	0.250E-01
Cs-137	#B	-2.0453E-02	-5.5888E-02	-5.5893E-02	0.384E-01
EU-152	B	5.8091E-02	6.7335E-02	6.7369E-02	0.782E-01
EU-154	B	4.0242E-02	7.0101E-02	7.0117E-02	0.710E-01
K-40		1.0966E+01	1.4569E+00	1.5126E+00	0.529E+00
PA-234	#C	1.4667E-01	1.1291E-01	1.1304E-01	0.115E+00
Pb-210	#C	0.0000E+00	0.0000E+00	0.0000E+00	0.000E+00
PB-212		4.3119E-01	1.1414E-01	1.1526E-01	0.795E-01
PB-214		5.3304E-01	1.3127E-01	1.3275E-01	0.801E-01
RA-226	A	6.7102E-01	1.0879E+00	1.0882E+00	0.876E+00
Th-230	#B	-5.3438E+00	-5.4754E+00	-5.4789E+00	0.264E+02
TH-234	#A	1.2774E+00	1.9028E+00	1.9033E+00	0.254E+01
Tl-208		2.7268E-01	8.8468E-02	8.9044E-02	0.161E-01
U-235	B	2.4755E-02	6.4319E-02	6.4325E-02	0.541E-01

- All peaks for activity calculation had bad shape.
* - Activity omitted from total
& - Activity omitted from total and all peaks had bad shape.
< - MDA value printed.
A - Activity printed, but activity < MDA.
B - Activity < MDA and failed test.
C - Area < Critical level.
F - Failed fraction or key line test.
H - Halflife limit exceeded

---------- S U M M A R Y ----------

Total Activity (41.9 to 2675.6 keV) 1.3722486E+01 picoCi/g

Laboratory: New World Technology

ORTEC g v - i (3263) wan32 G53W2.06 04-AUG-2006 11:55:26 Page 1
New World Technology Spectrum name: 1N001777.An1

Sample description
IR07 Bkd 06NPBRAO-011 513g
4/26/06 12:00

Acquisition information
Start time: 02-May-2006 19:51:06
Live time: 2700
Real time: 2703

- -

***** S U M M A R Y O F N U C L I D E S I N S A M P L E *****

Nuclide		Activity picoCi/ g	Time of Count Uncertainty picoCi/ g	2 Sigma Total picoCi/ g	MDA picoCi/ g
Ac-228		6.2803E-01	1.7113E-01	1.7270E-01	0.605E-01
AM-241	#A	-8.5207E-02	-7.8846E-01	-7.8846E-01	0.198E+00
Bi-212		3.9393E-01	3.5895E-01	3.5924E-01	0.251E+00
BI-214	F	5.3859E-01	1.4143E-01	1.4283E-01	0.328E+00
CO-60	#A	-3.1350E-02	8.3064E+01	8.3064E+01	0.314E-01
CS-137	#A	-6.2368E-02	-1.5333E-01	-1.5335E-01	0.415E-01
EU-152	C	1.4040E-01	8.7556E-02	8.7710E-02	0.534E-01
EU-154	A	2.2165E-02	4.6608E-02	4.6615E-02	0.439E-01
K-40		8.9737E+00	1.5738E+00	1.6086E+00	0.710E+00
Pa-234	#B	1.4211E-02	1.6651E-02	1.6659E-02	0.116E+00
Pb-210	#	8.2658E+00	9.0500E+00	9.0552E+00	0.571E+01
Pb-212		5.0393E-01	9.3441E-02	9.5291E-02	0.497E-01
Pb-214		4.9550E-01	1.1632E-01	1.1777E-01	0.438E-01
RA-226		1.2284E+00	7.8781E-01	7.8912E-01	0.621E+00
Th-230	#F	1.7476E+01	1.8697E+01	1.8708E+01	0.122E+02
Th-234	B	-2.0446E-01	-3.4606E-01	-3.4614E-01	0.128E+01
Tl-208		1.7895E-01	6.1673E-02	6.2029E-02	0.246E-01
U-235	B	3.2488E-02	2.9038E-02	2.9062E-02	0.455E-01

- All peaks for activity calculation had bad shape.
* - Activity omitted from total
& - Activity omitted from total and all peaks had bad shape.
< - MDA value printed.
A - Activity printed, but activity < MDA.
B - Activity < MDA and failed test.
C - Area < Critical level.
F - Failed fraction or key line test.
H - Halflife limit exceeded

---------- S U M M A R Y ----------

Total Activity (41.2 to 2606.4 keV) 3.8683277E+01 picoCi/ g

Laboratory: New World Technology

ORTEC g v - i (3263) wan32 G53W2.03 04-AUG-2006 13:58:51 Page 1
New World Technology Spectrum name: 3N002319.An1

Sample description
IR07 Bkd 06NPBRAO-012 522g
4/26/2006 12:00

Acquisition information
Start time: 02-May-2006 19:55:15
Live time: 2700
Real time: 2703

- -

***** S U M M A R Y O F N U C L I D E S I N S A M P L E *****

Nuclide		Activity picoCi/g	Time of Count Uncertainty Counting picoCi/g	2 Sigma Total picoCi/g	MDA picoCi/g
Ac-228		3.3862E-01	1.7367E-01	1.7412E-01	0.149E+00
AM-241	#B	-2.8506E-02	-2.0585E-01	-2.0585E-01	0.371E-01
Bi-212	#	4.1502E-01	2.0982E-01	2.1039E-01	0.954E-01
BI-214	F	2.5223E-01	1.1902E-01	1.1939E-01	0.863E-01
CO-60	#F	2.6300E-02	2.0232E-02	2.0256E-02	0.184E-01
Cs-137	#B	-2.4138E-04	-4.5441E-02	-4.5441E-02	0.409E-01
EU-152	F	1.3923E-01	1.3460E-01	1.3470E-01	0.590E-01
EU-154	B	3.9110E-02	5.3786E-02	5.3805E-02	0.433E-01
K-40		8.5036E+00	1.3643E+00	1.4003E+00	0.905E+00
PA-234	#B	2.0750E-03	1.2760E-01	1.2760E-01	0.927E-01
Pb-210	#B	-4.6142E-02	-8.9763E-01	-8.9763E-01	0.715E+00
PB-212		3.4760E-01	8.4452E-02	8.5429E-02	0.580E-01
PB-214	F	3.5861E-01	1.2667E-01	1.2737E-01	0.923E-01
RA-226	A	5.4760E-01	7.0779E-01	7.0808E-01	0.570E+00
Th-230	B	-2.2896E+00	-6.9016E+00	-6.9021E+00	0.592E+01
TH-234	C	6.4211E-01	6.8454E-01	6.8495E-01	0.555E+00
Tl-208		1.2217E-01	5.0516E-02	5.0719E-02	0.643E-01
U-235	#F	4.1834E-02	4.3314E-02	4.3342E-02	0.397E-01

- All peaks for activity calculation had bad shape.
* - Activity omitted from total
& - Activity omitted from total and all peaks had bad shape.
< - MDA value printed.
A - Activity printed, but activity < MDA.
B - Activity < MDA and failed test.
C - Area < Critical level.
F - Failed fraction or key line test.
H - Halflife limit exceeded

---------- S U M M A R Y ----------

Total Activity (41.7 to 2660.5 keV) 1.0337836E+01 picoCi/g

Laboratory: New World Technology

ORTEC g v - i (3263) wan32 G53W2.06 04-AUG-2006 11:55:54 Page 1
New World Technology Spectrum name: 1N001778.An1

Sample description
IR07 Bkd 06NPBRAO-013 486g
4/26/06 12:00

Acquisition information
Start time: 02-May-2006 20:46:53
Live time: 2700
Real time: 2703

- -

***** S U M M A R Y O F N U C L I D E S I N S A M P L E *****

Nuclide		Activity picoCi/ g	Time of Count Uncertainty picoCi/ g	2 Sigma Total picoCi/ g	MDA picoCi/ g
Ac-228		5.5441E-01	1.6681E-01	1.6807E-01	0.357E-01
AM-241	#A	-8.7358E-02	-5.0808E-01	-5.0809E-01	0.146E+00
Bi-212	B	-9.1788E-02	7.1120E+02	7.1120E+02	0.269E+00
BI-214	F	4.3822E-01	1.5332E-01	1.5418E-01	0.316E+00
CO-60	#A	-3.3092E-02	8.7679E+01	8.7679E+01	0.332E-01
CS-137	#A	-7.2050E-02	-3.7401E-01	-3.7402E-01	0.488E-01
EU-152	C	6.7663E-02	7.0021E-02	7.0066E-02	0.671E-01
EU-154	#A	-3.7234E-03	-6.0466E-02	-6.0466E-02	0.406E-01
K-40		7.1815E+00	1.4807E+00	1.5044E+00	0.750E+00
Pa-234	#B	-6.9464E-02	-6.9464E-02	-6.9511E-02	0.991E-01
Pb-210	#B	-1.5650E-01	-1.0531E+00	-1.0531E+00	0.264E+01
Pb-212		3.8615E-01	8.9900E-02	9.1032E-02	0.489E-01
Pb-214		5.0739E-01	1.2504E-01	1.2645E-01	0.434E-01
RA-226	A	6.0437E-01	8.8059E-01	8.8088E-01	0.737E+00
Th-230	#B	8.9189E+00	1.3580E+01	1.3584E+01	0.957E+01
Th-234	#B	7.3124E-02	1.1896E-01	1.1899E-01	0.125E+01
Tl-208	#	1.7095E-01	6.1875E-02	6.2199E-02	0.252E-01
U-235	F	6.1989E-02	3.4555E-02	3.4632E-02	0.465E-01

- All peaks for activity calculation had bad shape.
* - Activity omitted from total
& - Activity omitted from total and all peaks had bad shape.
< - MDA value printed.
A - Activity printed, but activity < MDA.
B - Activity < MDA and failed test.
C - Area < Critical level.
F - Failed fraction or key line test.
H - Halflife limit exceeded

---------- S U M M A R Y ----------

Total Activity (41.2 to 2606.4 keV) 8.8004379E+00 picoCi/ g

Laboratory: New World Technology

ORTEC g v - i (3263) wan32 G53W2.03 04-AUG-2006 12:25:40 Page 1
New World Technology Spectrum name: 2N002315.An1

Sample description
IRO7 Bkd 06NPBRAO-014 508g
04/26/2006 12:00

Acquisition information
Start time: 02-May-2006 20:50:11
Live time: 2700
Real time: 2704

- -

***** S U M M A R Y O F N U C L I D E S I N S A M P L E *****

Nuclide		Activity picoCi/g	Time of Count Uncertainty Counting picoCi/g	2 Sigma Total picoCi/g	MDA picoCi/g
Ac-228		3.6061E-01	1.4020E-01	1.4084E-01	0.118E+00
AM-241	#B	-2.8466E-01	-1.8170E+00	-1.8170E+00	0.407E+00
Bi-212	F	4.3424E-01	3.0658E-01	3.0700E-01	0.209E+00
BI-214	F	4.7121E-01	1.3861E-01	1.3971E-01	0.745E-01
CO-60	#B	1.2894E-02	2.1490E-02	2.1495E-02	0.194E-01
Cs-137	A	1.7412E-03	4.1434E-02	4.1434E-02	0.397E-01
EU-152	F	6.8764E-02	7.5378E-02	7.5421E-02	0.664E-01
EU-154	A	2.7903E-02	3.7717E-02	3.7731E-02	0.468E-01
K-40		1.0315E+01	1.3201E+00	1.3744E+00	0.466E+00
PA-234	B	7.3089E-03	1.3186E-01	1.3186E-01	0.110E+00
Pb-210	#F	0.0000E+00	0.0000E+00	0.0000E+00	0.000E+00
PB-212		3.4314E-01	8.8457E-02	8.9368E-02	0.608E-01
PB-214		4.2537E-01	1.2076E-01	1.2179E-01	0.697E-01
RA-226	A	3.9971E-01	9.3793E-01	9.3805E-01	0.807E+00
Th-230	B	-2.0742E+01	-6.7709E+01	-6.7713E+01	0.218E+02
TH-234		2.6525E+00	3.4471E+00	3.4485E+00	0.240E+01
Tl-208		2.6887E-01	7.7617E-02	7.8255E-02	0.131E-01
U-235	#B	-1.6527E-02	-1.5794E-01	-1.5794E-01	0.516E-01

- All peaks for activity calculation had bad shape.
* - Activity omitted from total
& - Activity omitted from total and all peaks had bad shape.
< - MDA value printed.
A - Activity printed, but activity < MDA.
B - Activity < MDA and failed test.
C - Area < Critical level.
F - Failed fraction or key line test.
H - Halflife limit exceeded

---------- S U M M A R Y ----------

Total Activity (41.9 to 2675.6 keV) 1.5270709E+01 picoCi/g

Laboratory: New World Technology

ORTEC g v - i (3263) wan32 G53W2.03 04-AUG-2006 14:30:15 Page 1
New World Technology Spectrum name: 3N002320.An1

Sample description
IR07 Bkd 06NPBRAO-015 487g
4/26/2006 12:00

Acquisition information
Start time: 02-May-2006 20:53:08
Live time: 2700
Real time: 2703

- -

***** S U M M A R Y O F N U C L I D E S I N S A M P L E *****

Nuclide		Activity picoCi/g	Time of Count Uncertainty Counting picoCi/g	2 Sigma Total picoCi/g	MDA picoCi/g
Ac-228	F	5.2821E-01	1.7973E-01	1.8079E-01	0.150E+00
AM-241	#B	-1.3240E-02	-1.3366E-01	-1.3366E-01	0.611E-01
Bi-212	F	6.8528E-01	3.5117E-01	3.5209E-01	0.173E+00
BI-214	F	4.5851E-01	1.6567E-01	1.6654E-01	0.902E-01
CO-60	#A	1.6717E-02	2.2985E-02	2.2993E-02	0.197E-01
Cs-137	#B	-3.5110E-02	-2.5094E-01	-2.5095E-01	0.415E-01
EU-152	F	1.4043E-01	9.1458E-02	9.1606E-02	0.493E-01
EU-154	#B	-2.1020E-02	1.0130E+02	1.0130E+02	0.369E-01
K-40		1.0541E+01	1.5231E+00	1.5725E+00	0.899E+00
PA-234	B	2.8840E-02	1.3265E-01	1.3266E-01	0.100E+00
Pb-210	A	2.9168E-01	8.5836E-01	8.5843E-01	0.771E+00
PB-212		3.8152E-01	9.0132E-02	9.1235E-02	0.597E-01
PB-214		4.4211E-01	1.3751E-01	1.3848E-01	0.923E-01
RA-226	A	4.4179E-01	7.2857E-01	7.2876E-01	0.594E+00
Th-230	#B	-7.7607E+00	1.6308E+04	1.6308E+04	0.617E+01
TH-234	#	9.4509E-01	7.5332E-01	7.5413E-01	0.658E+00
Tl-208	#B	-8.4346E-02	-6.1003E-02	-6.1083E-02	0.743E-01
U-235	#B	-3.2264E-03	-5.1053E-02	-5.1053E-02	0.379E-01

- All peaks for activity calculation had bad shape.
* - Activity omitted from total
& - Activity omitted from total and all peaks had bad shape.
< - MDA value printed.
A - Activity printed, but activity < MDA.
B - Activity < MDA and failed test.
C - Area < Critical level.
F - Failed fraction or key line test.
H - Halflife limit exceeded

---------- S U M M A R Y ----------

Total Activity (41.7 to 2660.5 keV) 1.4122178E+01 picoCi/g

Laboratory: New World Technology

ORTEC g v - i (3263) wan32 G53W2.06 04-AUG-2006 11:56:29 Page 1
New World Technology Spectrum name: 1N001779.An1

Sample description
IR07 Bkd 06NPBRAO-016 469g
4/26/06 12:00

Acquisition information
Start time: 02-May-2006 21:36:46
Live time: 2700
Real time: 2703

- -

***** S U M M A R Y O F N U C L I D E S I N S A M P L E *****

Nuclide		Activity picoCi/ g	Time of Count Uncertainty picoCi/ g	2 Sigma Counting picoCi/ g	Total picoCi/ g	MDA picoCi/ g
Ac-228		6.1960E-01	1.8824E-01	1.8964E-01	0.662E-01	
AM-241	#A	-1.8135E-02	-2.7637E-01	-2.7637E-01	0.195E+00	
Bi-212	B	-6.1238E-02	-1.0768E+00	-1.0768E+00	0.225E+00	
BI-214	F	1.6050E+00	5.9844E-01	6.0139E-01	0.189E+00	
CO-60	#A	-3.4292E-02	9.0857E+01	9.0857E+01	0.344E-01	
CS-137	#A	-5.9428E-02	-1.2423E-01	-1.2425E-01	0.453E-01	
EU-152	#A	-5.5603E-02	1.5428E+02	1.5428E+02	0.584E-01	
EU-154	A	4.5298E-03	3.0741E-02	3.0741E-02	0.338E-01	
K-40		9.1740E+00	1.6729E+00	1.7072E+00	0.777E+00	
Pa-234	#B	-4.0574E-02	-4.0574E-02	-4.0601E-02	0.993E-01	
Pb-210	#A	1.5407E+00	2.9416E+00	2.9422E+00	0.253E+01	
Pb-212		5.0049E-01	1.0075E-01	1.0244E-01	0.562E-01	
Pb-214		5.5631E-01	1.5699E-01	1.5834E-01	0.597E-01	
RA-226	A	2.2407E-01	9.0121E-01	9.0125E-01	0.777E+00	
Th-230	#B	3.4974E+00	1.8103E+01	1.8103E+01	0.126E+02	
Th-234	B	1.2311E-02	1.6932E-02	1.6938E-02	0.141E+01	
Tl-208	#	2.2585E-01	7.0434E-02	7.0930E-02	0.251E-01	
U-235	A	2.2682E-02	5.5880E-02	5.5886E-02	0.410E-01	

- All peaks for activity calculation had bad shape.
* - Activity omitted from total
& - Activity omitted from total and all peaks had bad shape.
< - MDA value printed.
A - Activity printed, but activity < MDA.
B - Activity < MDA and failed test.
C - Area < Critical level.
F - Failed fraction or key line test.
H - Halflife limit exceeded

---------- S U M M A R Y ----------

Total Activity (41.2 to 2606.4 keV) 1.2681245E+01 picoCi/ g

Laboratory: New World Technology

ORTEC g v - i (3263) wan32 G53W2.03 04-AUG-2006 14:37:30 Page 1
New World Technology Spectrum name: 2N002316.An1

Sample description
IRO7 Bkd 06NPBRAO-017 529g
04/26/2006 12:00

Acquisition information
Start time: 02-May-2006 21:40:27
Live time: 2700
Real time: 2704

- -

***** S U M M A R Y O F N U C L I D E S I N S A M P L E *****

Nuclide		Activity picoCi/g	Time of Count Uncertainty Counting picoCi/g	2 Sigma Total picoCi/g	MDA picoCi/g
Ac-228		3.7070E-01	1.2479E-01	1.2555E-01	0.126E+00
AM-241	#B	-3.2349E-01	-3.5656E+00	-3.5656E+00	0.445E+00
Bi-212	F	5.0595E-01	2.8277E-01	2.8339E-01	0.176E+00
BI-214	F	4.2091E-01	1.1492E-01	1.1597E-01	0.602E-01
CO-60	#B	-1.6166E-02	-1.3346E-01	-1.3346E-01	0.207E-01
Cs-137	A	1.1673E-02	3.1675E-02	3.1678E-02	0.314E-01
EU-152	B	4.5847E-02	4.3100E-02	4.3133E-02	0.611E-01
EU-154	B	3.3573E-03	4.1153E-02	4.1154E-02	0.460E-01
K-40	#	6.8054E+00	1.0253E+00	1.0559E+00	0.412E+00
PA-234	#F	9.7789E-02	9.2506E-02	9.2577E-02	0.929E-01
Pb-210	#F	0.0000E+00	0.0000E+00	0.0000E+00	0.000E+00
PB-212		3.4400E-01	8.8682E-02	8.9595E-02	0.613E-01
PB-214		3.5327E-01	1.2389E-01	1.2458E-01	0.706E-01
RA-226		7.8814E-01	8.3486E-01	8.3537E-01	0.665E+00
Th-230	#B	-2.6338E+01	5.5439E+04	5.5439E+04	0.210E+02
TH-234	#	3.1246E+00	3.7171E+00	3.7189E+00	0.245E+01
Tl-208	F	7.4291E-02	4.1646E-02	4.1737E-02	0.526E-01
U-235	B	-2.7127E-03	-1.2681E-02	-1.2682E-02	0.384E-01

- All peaks for activity calculation had bad shape.
* - Activity omitted from total
& - Activity omitted from total and all peaks had bad shape.
< - MDA value printed.
A - Activity printed, but activity < MDA.
B - Activity < MDA and failed test.
C - Area < Critical level.
F - Failed fraction or key line test.
H - Halflife limit exceeded

---------- S U M M A R Y ----------

Total Activity (41.9 to 2675.6 keV) 1.2712976E+01 picoCi/g

Laboratory: New World Technology

ORTEC g v - i (3263) wan32 G53W2.03 04-AUG-2006 14:00:06 Page 1
New World Technology Spectrum name: 3N002321.An1

Sample description
IR07 Bkd 06NPBRAO-018 478g
4/26/2006 12:00

Acquisition information
Start time: 02-May-2006 21:45:02
Live time: 2700
Real time: 2703

- -

***** S U M M A R Y O F N U C L I D E S I N S A M P L E *****

Nuclide		Activity picoCi/g	Time of Count Uncertainty Counting picoCi/g	2 Sigma Total picoCi/g	MDA picoCi/g
Ac-228		3.0073E-01	1.6662E-01	1.6699E-01	0.155E+00
AM-241	#A	1.6343E-02	9.5845E-02	9.5846E-02	0.725E-01
Bi-212		8.2722E-01	4.7085E-01	4.7184E-01	0.227E+00
BI-214		4.1628E-01	1.4274E-01	1.4357E-01	0.896E-01
CO-60	#B	5.9242E-03	1.9592E-02	1.9594E-02	0.200E-01
Cs-137	A	2.0976E-02	3.6307E-02	3.6315E-02	0.332E-01
EU-152	B	-3.4290E-03	1.5177E+02	1.5177E+02	0.518E-01
EU-154	#B	2.2875E-02	6.1051E-02	6.1057E-02	0.446E-01
K-40		7.0296E+00	1.2728E+00	1.2992E+00	0.891E+00
PA-234	F	1.3216E-01	1.2710E-01	1.2720E-01	0.104E+00
Pb-210	A	7.0545E-02	1.0627E+00	1.0627E+00	0.835E+00
PB-212		3.5561E-01	9.4438E-02	9.5354E-02	0.639E-01
PB-214		2.8243E-01	1.6214E-01	1.6248E-01	0.977E-01
RA-226	A	4.8164E-01	7.1454E-01	7.1477E-01	0.580E+00
Th-230	#B	2.9151E+00	6.2348E+00	6.2357E+00	0.761E+01
TH-234	B	-1.6297E-01	-3.8513E-01	-3.8518E-01	0.536E+00
Tl-208	B	8.4747E-03	3.9469E-03	3.9594E-03	0.895E-01
U-235	#B	-1.3597E-02	-1.0120E-01	-1.0120E-01	0.433E-01

- All peaks for activity calculation had bad shape.
* - Activity omitted from total
& - Activity omitted from total and all peaks had bad shape.
< - MDA value printed.
A - Activity printed, but activity < MDA.
B - Activity < MDA and failed test.
C - Area < Critical level.
F - Failed fraction or key line test.
H - Halflife limit exceeded

---------- S U M M A R Y ----------

Total Activity (41.7 to 2660.5 keV) 9.2118893E+00 picoCi/g

Laboratory: New World Technology

STRONTIUM-90 ANALYSIS REPORT

Count Date:	7/24/2006	Instrument ID:	Protean WPC 9550	Count Time:	30 min
Batch ID:	NWTLAB072406-008	Detector ID:	0615608	Y-90 Efficiency:	47.6%
Performed By:	P Smith	Cal Due Date:	5/24/2007	Sr-90 Efficiency:	39.8%
				Sr-90 Added:	10 mg

Sample ID	Date Time Collected HH:MM:SS	Y-90 Date Time Start HH:MM:SS	Date Time Count HH:MM	Aliquot Mass grams	Initial Mass grams	Final Mass grams	Sr-90 Yield percent	Total CPM	Total Counts	Sr-90 Activity pCi/g	MDC pCi/g	2 Sigma Uncertainty pCi/g
06NPBRA0-006	4/26/06 12:00	7/24/06 1:38	7/24/06 13:22	10	9.2795	9.2890	93.0%	0.433	13	-0.123	0.194	0.171
06NPBRAO-005	4/26/06 14:00	7/24/06 1:38	7/24/06 14:23	10	9.2107	9.2202	93.0%	0.367	11	-0.204	0.194	0.220
Method Spike 1.0	7/22/06 0:00	7/24/06 1:38	7/24/06 12:52	10	9.1080	9.1175	93.0%	1.367	41	1.024	0.194	0.493
Blank	7/22/06 0:00	7/24/06 1:38	7/24/06 12:21	10	9.3800	9.3802		0.533	16			

ATTACHMENT 3

RADIUM-226 STANDARD SAMPLE RESULTS

This page intentionally left blank.

Eckert & Ziegler
Analytics

1380 Seaboard Industrial Blvd.
Atlanta, Georgia 30318
Tel 404·352·8677
Fax 404·352·2837
www.analyticsinc.com

CERTIFICATE OF CALIBRATION
Standard Radionuclide Source

76617-589

Ra-226 400 Grams Soil in 250 mL HDPE PTI Jar

Customer: New World Technology
P.O. No.: Dougherty 1-10-08, Item 1

This standard radionuclide source was prepared gravimetrically from a calibrated master solution. The master solution was calibrated using a germanium gamma spectrometer system.

Radionuclide purity and calibration were checked with a germanium gamma spectrometer system. The nuclear decay rate and assay date for this source are given below.

Analytics maintains traceability to the National Institute of Standards and Technology through participation in a Measurements Assurance Program as described in USNRC Reg. Guide 4.15, Revision 1, February 1979.

ISOTOPE:	Ra-226
ACTIVITY (Bq):	4.434 E2
HALF-LIFE:	1.600 E3 years
CALIBRATION DATE:	February 11, 2008 12:00 EST
RELATIVE EXPANDED UNCERTAINTY (k=2):	3.3%

Comments:

Impurities: γ-impurities <0.1%
258.0 mL of sieved griffin soil.

Source Prepared By: N. Kiesman
N. E. Kiesman, Radiochemist

QA Approved: D. M. Montgomery, QA Manager Date: 2-12-08

End of Certificate

ORTEC g v - i (3263) wan32 G53W2.06 18-FEB-2008 08:26:31
New World Technology Spectrum name: An12B7.An1

Sample description
Det 1 Ra 226 Calib Chk
2/18/08 07:38

Acquisition information
Start time: 18-Feb-2008 07:39:40
Live time: 2700
Real time: 2706

- -

***** S U M M A R Y O F N U C L I D E S I N S A M P L E *****

Nuclide		Time of Count Activity pCi/g	Uncertainty Counting pCi/g	2 Sigma Total pCi/g	MDA pCi/g
Ac-228	F	1.2244E+00	4.8335E-01	4.8548E-01	0.220E+00
AM-241	#A	-1.5473E-01	-2.4608E+00	-2.4608E+00	0.135E+01
Bi-212	F	8.5048E-01	6.3592E-01	6.3670E-01	0.468E+00
BI-214		1.8721E+01	7.1868E-01	9.9925E-01	0.158E+00
CO-60	#B	-4.5674E-03	-5.7873E-02	-5.7873E-02	0.208E-01
CS-137		1.2591E-01	8.8554E-02	8.8677E-02	0.695E-01
EU-152	C	3.2093E-01	2.0553E-01	2.0587E-01	0.205E+00
EU-154	#A	-4.8029E-03	3.6015E+02	3.6015E+02	0.155E+00
K-40		8.2065E+00	1.6561E+00	1.6839E+00	0.731E+00
Pa-234	F	4.5045E-01	4.0258E-01	4.0292E-01	0.322E+00
Pb-210	#F	0.0000E+00	0.0000E+00	0.0000E+00	0.000E+00
Pb-212	F	3.5933E-01	1.9293E-01	1.9339E-01	0.154E+00
Pb-214		1.9317E+01	6.7548E-01	9.8463E-01	0.198E+00
RA-226		3.0689E+01	3.3478E+00	3.5360E+00	0.217E+01
Th-230	#B	2.1256E+01	8.3527E+01	8.3530E+01	0.632E+02
Th-234	B	-4.1112E+00	-8.7013E+00	-8.7026E+00	0.576E+01
Tl-208		2.6016E-01	8.9196E-02	8.9717E-02	0.173E-01
U-235	#B	-1.1060E+00	-6.6924E+00	-6.6925E+00	0.221E+00

- All peaks for activity calculation had bad shape.
* - Activity omitted from total
& - Activity omitted from total and all peaks had bad shape.
< - MDA value printed.
A - Activity printed, but activity < MDA.
B - Activity < MDA and failed test.
C - Area < Critical level.
F - Failed fraction or key line test.
H - Halflife limit exceeded

---------- S U M M A R Y ----------

Total Activity (41.2 to 2630.1 keV) 8.0204834E+01 pCi/g

Laboratory: New World Technology

ORTEC g v - i (3263) wan32 G53W2.06 18-FEB-2008 09:16:35
New World Technology Spectrum name: An1277.An1

Sample description
Det 2 Ra 226 Calib Chk
2/18/08 08:28

Acquisition information
Start time: 18-Feb-2008 08:29:00
Live time: 2700
Real time: 2705

- -

***** S U M M A R Y O F N U C L I D E S I N S A M P L E *****

Nuclide		Time of Count Activity pCi/g	Uncertainty Counting pCi/g	2 Sigma Total pCi/g	MDA pCi/g
Ac-228	F	8.9816E-01	3.2860E-01	3.3029E-01	0.231E+00
AM-241	#B	-2.0290E-03	-2.0075E-01	-2.0075E-01	0.157E+00
Bi-212	F	1.0626E+00	8.1373E-01	8.1468E-01	0.464E+00
BI-214		1.8988E+01	6.7375E-01	9.7507E-01	0.132E+00
CO-60	#B	-7.1375E-02	-2.9761E-01	-2.9763E-01	0.460E-01
CS-137		1.1577E-01	7.8852E-02	7.8969E-02	0.617E-01
EU-152	F	7.8359E-01	1.9063E-01	1.9284E-01	0.168E+00
EU-154	F	2.1243E-01	1.5409E-01	1.5429E-01	0.122E+00
K-40		4.0252E+00	1.8591E+00	1.8651E+00	0.931E+00
Pa-234	F	3.2315E-01	2.4603E-01	2.4632E-01	0.182E+00
Pb-210		2.6561E+00	1.6345E+00	1.6375E+00	0.129E+01
Pb-212	F	6.0675E-01	1.6870E-01	1.7020E-01	0.125E+00
Pb-214		1.8490E+01	6.0425E-01	9.1445E-01	0.161E+00
RA-226		3.0127E+01	2.7354E+00	2.9552E+00	0.168E+01
Th-230	#B	5.4986E+00	1.7363E+01	1.7364E+01	0.139E+02
Th-234	B	1.4707E+00	2.2615E+00	2.2621E+00	0.157E+01
Tl-208	F	1.8519E-01	1.2758E-01	1.2777E-01	0.723E-01
U-235	B	-1.0847E-02	-2.3291E-02	-2.3295E-02	0.156E+00

- All peaks for activity calculation had bad shape.
* - Activity omitted from total
& - Activity omitted from total and all peaks had bad shape.
< - MDA value printed.
A - Activity printed, but activity < MDA.
B - Activity < MDA and failed test.
C - Area < Critical level.
F - Failed fraction or key line test.
H - Halflife limit exceeded

---------- S U M M A R Y ----------

Total Activity (40.2 to 2567.0 keV) 7.6091515E+01 pCi/g

Laboratory: New World Technology

ORTEC g v - i (3263) wan32 G53W2.06 18-FEB-2008 10:06:23
New World Technology Spectrum name: An124D.An1

Sample description
Det 3 Ra 226 Calib Chk
2/18/08 09:19

Acquisition information
Start time: 18-Feb-2008 09:20:28
Live time: 2700
Real time: 2707

- -

***** S U M M A R Y O F N U C L I D E S I N S A M P L E *****

Nuclide		Time of Count Activity pCi/g	Uncertainty Counting pCi/g	2 Sigma Total pCi/g	MDA pCi/g
Ac-228	F	7.5461E-01	3.4548E-01	3.4661E-01	0.249E+00
AM-241	#B	-5.1847E-02	4.3491E+02	4.3491E+02	0.188E+00
Bi-212	#F	1.0879E+00	5.1651E-01	5.1809E-01	0.537E+00
BI-214		1.7623E+01	6.6453E-01	9.3225E-01	0.144E+00
CO-60	#B	-6.5762E-02	-2.9198E-01	-2.9199E-01	0.522E-01
CS-137		8.6993E-02	8.4868E-02	8.4929E-02	0.686E-01
EU-152	F	6.3519E-01	1.6594E-01	1.6761E-01	0.188E+00
EU-154	F	2.9588E-01	2.3065E-01	2.3091E-01	0.129E+00
K-40		5.1851E+00	1.5916E+00	1.6032E+00	0.781E+00
Pa-234	F	4.9680E-01	2.9744E-01	2.9801E-01	0.120E+00
Pb-210	F	1.9590E+00	2.8550E+00	2.8559E+00	0.183E+01
Pb-212	F	5.6534E-01	1.8556E-01	1.8674E-01	0.144E+00
PB-214		1.8398E+01	6.4715E-01	9.4061E-01	0.192E+00
RA-226		3.0234E+01	3.0098E+00	3.2120E+00	0.195E+01
Th-230	#B	8.8511E+00	2.2840E+01	2.2843E+01	0.159E+02
Th-234	B	7.1857E-01	1.7635E+00	1.7637E+00	0.145E+01
Tl-208	F	1.9651E-01	6.0610E-02	6.1046E-02	0.183E-01
U-235	F	2.0750E-01	2.7819E-01	2.7830E-01	0.168E+00

- All peaks for activity calculation had bad shape.
* - Activity omitted from total
& - Activity omitted from total and all peaks had bad shape.
< - MDA value printed.
A - Activity printed, but activity < MDA.
B - Activity < MDA and failed test.
C - Area < Critical level.
F - Failed fraction or key line test.
H - Halflife limit exceeded

---------- S U M M A R Y ----------

Total Activity (42.5 to 2705.0 keV) 7.3339516E+01 pCi/g

Laboratory: New World Technology

ORTEC g v - i (3263) wan32 G53W2.06 18-FEB-2008 10:54:48
New World Technology Spectrum name: An1283.An1

Sample description
Det 4 Ra 226 Calib Chk
2/18/08 10:06

Acquisition information
Start time: 18-Feb-2008 10:06:56
Live time: 2700
Real time: 2710

- -

***** S U M M A R Y O F N U C L I D E S I N S A M P L E *****

Nuclide		Time of Count Activity pCi/g	Uncertainty Counting pCi/g	2 Sigma Total pCi/g	MDA pCi/g
Ac-228	F	9.3342E-01	4.6565E-01	4.6693E-01	0.241E+00
AM-241	A	1.2167E-01	2.8771E-01	2.8775E-01	0.236E+00
Bi-212	B	-1.1509E-01	-2.5586E-01	-2.5589E-01	0.572E+00
BI-214		1.8986E+01	6.6732E-01	9.6963E-01	0.143E+00
CO-60	#B	3.4532E-02	3.7423E-02	3.7445E-02	0.400E-01
CS-137		1.0709E-01	8.8520E-02	8.8609E-02	0.705E-01
EU-152	F	5.5069E-01	1.5642E-01	1.5774E-01	0.157E+00
EU-154	#F	1.8674E-01	1.8012E-01	1.8025E-01	0.141E+00
K-40		6.3025E+00	1.6018E+00	1.6188E+00	0.804E+00
Pa-234	B	1.9402E-01	2.5450E-01	2.5460E-01	0.220E+00
Pb-210	#	3.9515E+00	3.0530E+00	3.0565E+00	0.197E+01
Pb-212	F	5.3379E-01	1.9571E-01	1.9671E-01	0.151E+00
PB-214		1.8832E+01	5.8653E-01	9.1154E-01	0.175E+00
RA-226		3.0047E+01	3.0502E+00	3.2470E+00	0.200E+01
Th-230	#B	-1.4425E+01	3.8824E+04	3.8824E+04	0.168E+02
Th-234		2.4732E+00	1.7050E+00	1.7075E+00	0.191E+01
Tl-208	F	2.8580E-01	9.2194E-02	9.2800E-02	0.363E-01
U-235	#B	-7.1591E-01	-1.6873E+00	-1.6875E+00	0.196E+00

- All peaks for activity calculation had bad shape.
* - Activity omitted from total
& - Activity omitted from total and all peaks had bad shape.
< - MDA value printed.
A - Activity printed, but activity < MDA.
B - Activity < MDA and failed test.
C - Area < Critical level.
F - Failed fraction or key line test.
H - Halflife limit exceeded

---------- S U M M A R Y ----------

Total Activity (42.7 to 3401.5 keV) 8.2452942E+01 pCi/g

Laboratory: New World Technology

ORTEC g v - i (3263) wan32 G53W2.06 19-FEB-2008 09:41:20
New World Technology Spectrum name: An12A2.An1

Sample description
Det 5 Ra 226 Calib Chk
2/18/08 10:56

Acquisition information
Start time: 18-Feb-2008 10:57:30
Live time: 2700
Real time: 2706

- -

***** S U M M A R Y O F N U C L I D E S I N S A M P L E *****

Nuclide		Time of Count Activity pCi/g	Uncertainty Counting pCi/g	2 Sigma Total pCi/g	MDA pCi/g
Ac-228	#F	4.2526E-01	5.1716E-01	5.1740E-01	0.300E+00
AM-241	#B	-3.5060E-02	-4.4967E-01	-4.4967E-01	0.229E+00
Bi-212	B	4.4649E-01	5.8617E-01	5.8640E-01	0.454E+00
BI-214		1.9352E+01	7.1695E-01	1.0153E+00	0.153E+00
CO-60	F	8.5463E-02	8.9779E-02	8.9835E-02	0.675E-01
CS-137		1.4524E-01	1.0066E-01	1.0081E-01	0.752E-01
EU-152	F	5.1101E-01	2.9215E-01	2.9276E-01	0.164E+00
EU-154	F	3.2323E-01	3.0177E-01	3.0201E-01	0.132E+00
K-40		6.3593E+00	1.6239E+00	1.6410E+00	0.805E+00
Pa-234	#B	-1.9362E-02	4.8470E+02	4.8470E+02	0.209E+00
Pb-210		3.0846E+00	2.0605E+00	2.0637E+00	0.166E+01
Pb-212	F	3.4737E-01	1.8695E-01	1.8739E-01	0.151E+00
PB-214		1.9341E+01	6.4170E-01	9.6330E-01	0.202E+00
RA-226		3.0179E+01	2.9180E+00	3.1260E+00	0.185E+01
Th-230	#B	-1.8802E+00	-3.2827E+01	-3.2827E+01	0.185E+02
Th-234	B	7.3716E-01	2.2187E+00	2.2189E+00	0.184E+01
Tl-208		2.4314E-01	8.6012E-02	8.6485E-02	0.706E-01
U-235	#B	-8.1788E-01	-6.9925E+00	-6.9925E+00	0.191E+00

- All peaks for activity calculation had bad shape.
* - Activity omitted from total
& - Activity omitted from total and all peaks had bad shape.
< - MDA value printed.
A - Activity printed, but activity < MDA.
B - Activity < MDA and failed test.
C - Area < Critical level.
F - Failed fraction or key line test.
H - Halflife limit exceeded

---------- S U M M A R Y ----------

Total Activity (41.2 to 2632.4 keV) 7.9562843E+01 pCi/g

Laboratory: New World Technology

ORTEC g v - i (3263) wan32 G53W2.06 18-FEB-2008 12:42:58
New World Technology Spectrum name: An14F.An1

Sample description
Det 6 Ra 226 Calib Chk
2/18/08 11:48

Acquisition information
Start time: 18-Feb-2008 11:48:58
Live time: 2700
Real time: 2708

- -

***** S U M M A R Y O F N U C L I D E S I N S A M P L E *****

Nuclide		Time of Count Activity pCi/g	Uncertainty Counting pCi/g	2 Sigma Total pCi/g	MDA pCi/g
Ac-228	F	5.4571E-01	3.3566E-01	3.3627E-01	0.284E+00
AM-241	#A	4.5395E-02	2.1711E-01	2.1711E-01	0.168E+00
Bi-212	F	6.1281E-01	2.6745E-01	2.6842E-01	0.549E+00
BI-214		1.9243E+01	7.0871E-01	1.0061E+00	0.183E+00
CO-60	F	1.4021E-01	6.8033E-02	6.8232E-02	0.466E-01
CS-137		1.0529E-01	8.5911E-02	8.6000E-02	0.683E-01
EU-152	F	2.8612E-01	2.1295E-01	2.1321E-01	0.167E+00
EU-154	F	1.3060E-01	1.9912E-01	1.9918E-01	0.113E+00
K-40		6.3859E+00	1.4728E+00	1.4918E+00	0.993E+00
Pa-234	F	2.6981E-01	3.5671E-01	3.5685E-01	0.192E+00
Pb-210		3.2602E+00	2.2707E+00	2.2739E+00	0.156E+01
Pb-212	F	5.5275E-01	1.8716E-01	1.8829E-01	0.146E+00
PB-214		2.0193E+01	6.8207E-01	1.0133E+00	0.215E+00
RA-226		3.0890E+01	2.8477E+00	3.0698E+00	0.181E+01
Th-230	#B	-1.1441E+01	-4.7694E+01	-4.7696E+01	0.195E+02
Th-234	#B	-5.2962E-01	-3.0401E+00	-3.0402E+00	0.154E+01
Tl-208	F	1.5462E-01	1.2649E-01	1.2662E-01	0.810E-01
U-235	B	-3.3070E-01	-8.3514E-01	-8.3523E-01	0.175E+00

- All peaks for activity calculation had bad shape.
* - Activity omitted from total
& - Activity omitted from total and all peaks had bad shape.
< - MDA value printed.
A - Activity printed, but activity < MDA.
B - Activity < MDA and failed test.
C - Area < Critical level.
F - Failed fraction or key line test.
H - Halflife limit exceeded

---------- S U M M A R Y ----------

Total Activity (41.1 to 2611.8 keV) 8.0783569E+01 pCi/g

Laboratory: New World Technology

ORTEC g v - i (3263) wan32 G53W2.06 18-FEB-2008 15:35:25
New World Technology Spectrum name: An12B4.An1

Sample description
Det 7 Ra 226 Calib Chk
2/18/08 14:45

Acquisition information
Start time: 18-Feb-2008 14:46:20
Live time: 2700
Real time: 2705

- -

***** S U M M A R Y O F N U C L I D E S I N S A M P L E *****

Nuclide		Time of Count Activity pCi/g	Uncertainty Counting pCi/g	2 Sigma Total pCi/g	MDA pCi/g
AC-228	F	1.1792E+00	5.7853E-01	5.8018E-01	0.238E+00
AM-241		3.1789E-01	2.6226E-01	2.6252E-01	0.212E+00
BI-212	F	5.4886E-01	6.5731E-01	6.5763E-01	0.521E+00
BI-214		1.8503E+01	6.3892E-01	9.3864E-01	0.173E+00
CO-60	#F	1.2013E-01	7.7855E-02	7.7983E-02	0.389E-01
CS-137		1.5385E-01	8.0273E-02	8.0477E-02	0.565E-01
EU-152	F	5.6278E-01	1.3613E-01	1.3773E-01	0.173E+00
EU-154	F	2.0314E-01	2.6382E-01	2.6393E-01	0.122E+00
K-40		7.2637E+00	1.7782E+00	1.7986E+00	0.837E+00
PA-234	B	1.4471E-01	1.6453E-01	1.6462E-01	0.148E+00
PB-210		2.5984E+00	2.2607E+00	2.2627E+00	0.185E+01
PB-212	F	6.4204E-01	1.7076E-01	1.7242E-01	0.127E+00
PB-214		1.8922E+01	5.7987E-01	9.1145E-01	0.172E+00
RA-226		3.0781E+01	2.7977E+00	3.0225E+00	0.177E+01
Th-230	#B	9.5970E+00	2.9961E+01	2.9963E+01	0.200E+02
TH-234	#B	-8.8792E-01	-4.0304E+00	-4.0305E+00	0.169E+01
TL-208	F	2.7458E-01	9.1254E-02	9.1823E-02	0.284E-01
U-235	#B	-7.8848E-01	-1.0807E+01	-1.0807E+01	0.181E+00

- All peaks for activity calculation had bad shape.
* - Activity omitted from total
& - Activity omitted from total and all peaks had bad shape.
< - MDA value printed.
A - Activity printed, but activity < MDA.
B - Activity < MDA and failed test.
C - Area < Critical level.
F - Failed fraction or key line test.
H - Halflife limit exceeded

---------- S U M M A R Y ----------

Total Activity (41.9 to 2669.1 keV) 8.0756523E+01 pCi/g

Laboratory: New World Technology

ORTEC g v - i (3263) wan32 G53W2.06 04-APR-2008 10:01:10
New World Technology Spectrum name: An11F2.An1

Sample description
Ra 226 70-B939INV-001 400g
4/4/08 06:55

Acquisition information
Start time: 04-Apr-2008 07:55:05
Live time: 2700
Real time: 2706

- -

***** S U M M A R Y O F N U C L I D E S I N S A M P L E *****

Nuclide		Time of Count Activity pCi/g	Uncertainty Counting pCi/g	2 Sigma Total pCi/g	MDA pCi/g
AC-228	F	1.0891E+00	5.4303E-01	5.4453E-01	0.260E+00
AM-241	#F	2.5025E-01	3.5205E-01	3.5218E-01	0.228E+00
BI-212	B	3.2912E-01	6.2609E-01	6.2621E-01	0.532E+00
BI-214		1.9357E+01	6.3995E-01	9.6153E-01	0.125E+00
CO-60	#B	-5.4076E-03	-9.2151E-02	-9.2151E-02	0.752E-01
CS-137		1.2940E-01	9.1499E-02	9.1624E-02	0.691E-01
EU-152	B	1.6513E-01	2.0499E-01	2.0509E-01	0.167E+00
EU-154	F	4.5393E-01	2.4604E-01	2.4662E-01	0.129E+00
K-40		7.1372E+00	1.4179E+00	1.4424E+00	0.850E+00
PA-234	#F	5.7169E-01	4.1252E-01	4.1306E-01	0.145E+00
PB-210		4.4062E+00	2.2571E+00	2.2630E+00	0.179E+01
PB-212	F	5.6913E-01	1.5753E-01	1.5894E-01	0.117E+00
PB-214		1.9701E+01	5.8063E-01	9.3308E-01	0.171E+00
RA-226		3.0420E+01	2.8713E+00	3.0849E+00	0.191E+01
Th-230	#B	-1.2828E+01	-8.2828E+01	-8.2829E+01	0.141E+02
TH-234	#B	1.2549E+00	2.0150E+00	2.0156E+00	0.148E+01
TL-208	F	1.9962E-01	1.2607E-01	1.2629E-01	0.424E-01
U-235	#B	-6.7546E-01	-2.4392E+00	-2.4393E+00	0.176E+00

- All peaks for activity calculation had bad shape.
* - Activity omitted from total
& - Activity omitted from total and all peaks had bad shape.
< - MDA value printed.
A - Activity printed, but activity < MDA.
B - Activity < MDA and failed test.
C - Area < Critical level.
F - Failed fraction or key line test.
H - Halflife limit exceeded

---------- S U M M A R Y ----------

Total Activity (41.9 to 2667.7 keV) 8.2809357E+01 pCi/g

Laboratory: New World Technology

ORTEC g v - i (3263) wan32 G53W2.06 04-APR-2008 09:46:20
New World Technology Spectrum name: An1386.An1

Sample description
Ra 226 70-B939INV-001 400g
4/4/08 08:56

Acquisition information
Start time: 04-Apr-2008 08:56:55
Live time: 2700
Real time: 2706

- -

***** S U M M A R Y O F N U C L I D E S I N S A M P L E *****

Nuclide		Time of Count Activity pCi/g	Uncertainty Counting pCi/g	2 Sigma Total pCi/g	MDA pCi/g
Ac-228	F	4.0229E-01	2.9553E-01	2.9591E-01	0.269E+00
AM-241	A	2.0126E-01	2.5766E-01	2.5777E-01	0.210E+00
Bi-212	#B	1.8051E-02	3.7724E-02	3.7730E-02	0.474E+00
BI-214	F	1.9665E+01	6.8388E-01	1.0000E+00	0.158E+00
CO-60	F	5.6954E-02	5.8464E-02	5.8502E-02	0.536E-01
CS-137		1.8590E-01	9.3275E-02	9.3530E-02	0.679E-01
EU-152	F	1.5509E-01	1.9180E-01	1.9189E-01	0.149E+00
EU-154	B	1.2944E-01	1.8854E-01	1.8860E-01	0.135E+00
K-40		6.3751E+00	1.9414E+00	1.9557E+00	0.897E+00
Pa-234	#B	1.1926E-01	2.4398E-01	2.4402E-01	0.163E+00
Pb-210		5.6272E+00	2.6597E+00	2.6679E+00	0.169E+01
Pb-212		4.3438E-01	1.7609E-01	1.7682E-01	0.139E+00
PB-214		1.9534E+01	5.7103E-01	9.2274E-01	0.175E+00
RA-226		3.0673E+01	2.8049E+00	3.0270E+00	0.179E+01
Th-230	#B	-2.7441E+01	3.0512E+04	3.0512E+04	0.132E+02
Th-234	B	6.6071E-01	1.9310E+00	1.9312E+00	0.161E+01
Tl-208	F	1.6423E-01	1.2583E-01	1.2597E-01	0.687E-01
U-235	B	-2.8218E-01	-4.7552E-01	-4.7564E-01	0.176E+00

- All peaks for activity calculation had bad shape.
* - Activity omitted from total
& - Activity omitted from total and all peaks had bad shape.
< - MDA value printed.
A - Activity printed, but activity < MDA.
B - Activity < MDA and failed test.
C - Area < Critical level.
F - Failed fraction or key line test.
H - Halflife limit exceeded

---------- S U M M A R Y ----------

Total Activity (41.1 to 2612.4 keV) 8.2658691E+01 pCi/g

Laboratory: New World Technology

ORTEC g v - i (3263) wan32 G53W2.06 04-APR-2008 13:57:56 Page 1
New World Technology Spectrum name: An1589.An1

Sample description
Ra 226 70-B939INV-001 400g
4/4/08 12:59

Acquisition information
Start time: 04-Apr-2008 13:02:39
Live time: 2700
Real time: 2706

- -

***** S U M M A R Y O F N U C L I D E S I N S A M P L E *****

Nuclide	Time of Count Activity pCi/g	Uncertainty Counting pCi/g	2 Sigma Total pCi/g	MDA pCi/g
Ac-228	1.2990E+00	3.7752E-01	3.8058E-01	0.142E+00
AM-241 #	6.2493E+00	4.0000E+00	4.0066E+00	0.137E+01
Bi-212 F	1.1468E+00	6.0529E-01	6.0678E-01	0.416E+00
BI-214	1.9782E+01	7.4685E-01	1.0469E+00	0.977E-01
CO-60 #	9.2590E-02	3.7154E-02	3.7313E-02	0.479E-01
CS-137 B	6.1260E-02	8.5366E-02	8.5396E-02	0.768E-01
EU-152	3.1755E-01	2.1166E-01	2.1199E-01	0.214E+00
EU-154	4.0940E-01	1.8271E-01	1.8333E-01	0.160E+00
K-40 #	6.8334E+00	1.1535E+00	1.1810E+00	0.464E+00
Pa-234 #	8.0991E-01	2.4994E-01	2.5173E-01	0.234E+00
Pb-210 #	0.0000E+00	0.0000E+00	0.0000E+00	0.000E+00
Pb-212	5.2881E-01	1.8598E-01	1.8701E-01	0.143E+00
Pb-214	2.0776E+01	7.7445E-01	1.0924E+00	0.212E+00
RA-226	2.9825E+01	3.2678E+00	3.4499E+00	0.208E+01
Th-230 #F	1.4347E+02	1.7529E+02	1.7537E+02	0.661E+02
Th-234 #	3.0581E+01	2.1790E+01	2.1819E+01	0.760E+01
Tl-208 #	1.6353E-01	7.1295E-02	7.1552E-02	0.173E-01
U-235 #B	-5.8710E-01	-5.1093E-01	-5.1139E-01	0.216E+00

- All peaks for activity calculation had bad shape.
* - Activity omitted from total
& - Activity omitted from total and all peaks had bad shape.
< - MDA value printed.
A - Activity printed, but activity < MDA.
B - Activity < MDA and failed test.
C - Area < Critical level.
F - Failed fraction or key line test.
H - Halflife limit exceeded

---------- S U M M A R Y ----------

Total Activity (41.2 to 2630.1 keV) 1.1256525E+02 pCi/g

Laboratory: New World Technology

ORTEC g v - i (3263) wan32 G53W2.06 04-APR-2008 14:52:10 Page 1
New World Technology Spectrum name: An159B.An1

Sample description
Ra 226 70-B939INV-001 400g
4/4/08 14:01

Acquisition information
Start time: 04-Apr-2008 14:01:45
Live time: 2700
Real time: 2707

- -

***** S U M M A R Y O F N U C L I D E S I N S A M P L E *****

Nuclide		Time of Count Activity pCi/g	Uncertainty Counting pCi/g	2 Sigma Total pCi/g	MDA pCi/g
Ac-228	F	6.3215E-01	3.0097E-01	3.0188E-01	0.198E+00
AM-241	#B	-6.5796E-02	5.8250E+02	5.8250E+02	0.156E+00
Bi-212	F	4.3675E-01	4.2101E-01	4.2133E-01	0.391E+00
BI-214	F	1.9598E+01	7.1122E-01	1.0174E+00	0.150E+00
CO-60	F	2.1663E-01	1.3811E-01	1.3834E-01	0.599E-01
CS-137	#B	-2.8668E-02	-1.1556E-01	-1.1556E-01	0.875E-01
EU-152	B	1.5809E-01	1.8728E-01	1.8737E-01	0.171E+00
EU-154	F	2.5956E-01	1.9617E-01	1.9641E-01	0.105E+00
K-40		6.2313E+00	1.5081E+00	1.5257E+00	0.552E+00
Pa-234	B	-8.0007E-03	5.1097E+02	5.1097E+02	0.134E+00
Pb-210	#	3.4037E+00	2.4345E+00	2.4378E+00	0.159E+01
Pb-212	F	5.0998E-01	1.6349E-01	1.6458E-01	0.122E+00
Pb-214		1.7202E+01	6.1318E-01	8.8528E-01	0.262E+00
RA-226		3.0072E+01	2.6527E+00	2.8780E+00	0.156E+01
Th-230	#B	4.7937E+00	1.9663E+01	1.9664E+01	0.152E+02
Th-234	F	1.4963E+00	1.3021E+00	1.3033E+00	0.128E+01
Tl-208	F	1.8827E-01	1.2077E-01	1.2098E-01	0.699E-01
U-235	#B	2.5362E-02	3.5062E-02	3.5075E-02	0.159E+00

- All peaks for activity calculation had bad shape.
* - Activity omitted from total
& - Activity omitted from total and all peaks had bad shape.
< - MDA value printed.
A - Activity printed, but activity < MDA.
B - Activity < MDA and failed test.
C - Area < Critical level.
F - Failed fraction or key line test.
H - Halflife limit exceeded

---------- S U M M A R Y ----------

Total Activity (40.2 to 2567.0 keV) 7.8053627E+01 pCi/g

Laboratory: New World Technology

ORTEC g v - i (2239) wan32 G53W2.06 04-APR-2008 12:06:25
New World Technology Spectrum name: An15A1.An1

Sample description
Ra 226 70-B939INV-001 400g
4/4/08 11:15

Acquisition information
Start time: 04-Apr-2008 11:15:54
Live time: 2700
Real time: 2707

- -

***** S U M M A R Y O F N U C L I D E S I N S A M P L E *****

Nuclide		Time of Count Activity pCi/g	Uncertainty Counting pCi/g	2 Sigma Total pCi/g	MDA pCi/g
Ac-228	#	1.2867E+00	7.2705E-01	7.2862E-01	0.333E+00
AM-241	B	5.4771E-02	2.8340E-01	2.8341E-01	0.235E+00
Bi-212	F	9.7719E-01	6.4761E-01	6.4862E-01	0.475E+00
BI-214		1.9319E+01	7.3096E-01	1.0239E+00	0.162E+00
CO-60	#F	2.0630E-01	1.1265E-01	1.1291E-01	0.513E-01
CS-137		2.5433E-01	9.5704E-02	9.6169E-02	0.648E-01
EU-152	F	4.1941E-01	2.1191E-01	2.1248E-01	0.193E+00
EU-154	F	5.0183E-01	2.7665E-01	2.7727E-01	0.123E+00
K-40		7.5455E+00	1.9708E+00	1.9906E+00	0.872E+00
Pa-234	F	2.6938E-01	2.5719E-01	2.5738E-01	0.222E+00
Pb-210		6.8864E+00	2.6936E+00	2.7056E+00	0.163E+01
Pb-212		3.6512E-01	1.7435E-01	1.7487E-01	0.140E+00
PB-214		1.7635E+01	6.7027E-01	9.3683E-01	0.210E+00
RA-226		2.9276E+01	2.7822E+00	2.9869E+00	0.177E+01
Th-230	#B	8.0377E+00	2.7669E+01	2.7671E+01	0.185E+02
Th-234	B	5.8392E-01	1.5302E+00	1.5304E+00	0.175E+01
Tl-208	F	2.9527E-01	8.9947E-02	9.0612E-02	0.839E-01
U-235	#B	-5.4179E-01	-7.9445E-01	-7.9471E-01	0.182E+00

- All peaks for activity calculation had bad shape.
* - Activity omitted from total
& - Activity omitted from total and all peaks had bad shape.
< - MDA value printed.
A - Activity printed, but activity < MDA.
B - Activity < MDA and failed test.
C - Area < Critical level.
F - Failed fraction or key line test.
H - Halflife limit exceeded

---------- S U M M A R Y ----------

Total Activity (41.2 to 2632.4 keV) 8.3751785E+01 pCi/g

Laboratory: New World Technology

ORTEC g v - i (3263) wan32 G53W2.06 04-APR-2008 11:13:11
New World Technology Spectrum name: An15BD.An1

Sample description
Ra 226 70-B939INV-001 400g
4/4/08 10:06

Acquisition information
Start time: 04-Apr-2008 10:09:54
Live time: 2700
Real time: 2710

- -

***** S U M M A R Y O F N U C L I D E S I N S A M P L E *****

Nuclide		Activity pCi/g	Time of Count Uncertainty Counting pCi/g	2 Sigma Total pCi/g	MDA pCi/g
Ac-228	F	9.4798E-01	4.3214E-01	4.3358E-01	0.256E+00
AM-241	A	8.0848E-02	2.9828E-01	2.9829E-01	0.246E+00
Bi-212	B	2.6593E-01	6.4338E-01	6.4346E-01	0.584E+00
BI-214		1.9148E+01	6.8686E-01	9.8914E-01	0.171E+00
CO-60	#F	6.6763E-02	9.6228E-02	9.6260E-02	0.577E-01
CS-137		1.3320E-01	9.3256E-02	9.3388E-02	0.700E-01
EU-152	F	6.8549E-01	1.7912E-01	1.8091E-01	0.199E+00
EU-154	B	1.3668E-01	1.6704E-01	1.6711E-01	0.139E+00
K-40		6.7544E+00	1.5491E+00	1.5693E+00	0.820E+00
Pa-234	B	1.7377E-01	1.9917E-01	1.9927E-01	0.209E+00
Pb-210	#	4.8998E+00	3.1091E+00	3.1144E+00	0.200E+01
Pb-212	F	4.2560E-01	1.8705E-01	1.8772E-01	0.147E+00
PB-214		1.8051E+01	6.3706E-01	9.2523E-01	0.200E+00
RA-226		3.0062E+01	2.9383E+00	3.1436E+00	0.192E+01
Th-230	#B	-1.0055E+01	-1.1636E+02	-1.1636E+02	0.159E+02
Th-234	B	1.8518E+00	2.2910E+00	2.2920E+00	0.189E+01
Tl-208	F	2.6918E-01	8.2686E-02	8.3289E-02	0.313E-01
U-235	#B	-6.0562E-01	-7.1791E-01	-7.1826E-01	0.182E+00

- All peaks for activity calculation had bad shape.
* - Activity omitted from total
& - Activity omitted from total and all peaks had bad shape.
< - MDA value printed.
A - Activity printed, but activity < MDA.
B - Activity < MDA and failed test.
C - Area < Critical level.
F - Failed fraction or key line test.
H - Halflife limit exceeded

---------- S U M M A R Y ----------

Total Activity (42.7 to 3401.5 keV) 8.0690788E+01 pCi/g

Laboratory: New World Technology

ATTACHMENT 4

ON-SITE LABORATORY RESULTS FROM UNCERTAINTY ESTIMATE TEST

This page intentionally left blank.

ORTEC g v - i (3263) wan32 G53W2.06 08-AUG-2008 13:04:26
New World Technology Spectrum name: 6D000001.An1

Sample description
Parcel D 70-PDB-G001237G5-01 342g
7/21/08 10:08

Acquisition information
Start time: 08-Aug-2008 10:54:26
Live time: 2700
Real time: 2703

- -

***** S U M M A R Y O F N U C L I D E S I N S A M P L E *****

Nuclide		Time of Count Activity pCi/g	Uncertainty Counting pCi/g	2 Sigma Total pCi/g	MDA pCi/g
Ac-228	F	5.6680E-01	2.1315E-01	2.1418E-01	0.207E+00
AM-241	#A	-1.0124E-01	2.7718E+02	2.7718E+02	0.120E+00
Bi-212	B	7.3625E-02	1.6463E-01	1.6465E-01	0.347E+00
BI-214	F	6.2205E-01	1.6006E-01	1.6172E-01	0.630E-01
CO-60	#B	-9.8814E-03	-1.0538E-02	-1.0544E-02	0.466E-01
CS-137		7.6686E-02	4.1140E-02	4.1238E-02	0.231E-01
EU-152	B	6.0337E-02	7.8166E-02	7.8198E-02	0.940E-01
EU-154	F	1.9195E-01	1.1856E-01	1.1878E-01	0.611E-01
K-40		8.6428E+00	1.4229E+00	1.4585E+00	0.698E+00
Pa-234	#B	-4.6741E-03	-2.0709E-02	-2.0709E-02	0.919E-01
Pb-210		1.7066E+00	1.2868E+00	1.2884E+00	0.104E+01
Pb-212	F	2.7890E-01	1.1286E-01	1.1333E-01	0.901E-01
PB-214		4.4217E-01	1.2348E-01	1.2457E-01	0.776E-01
RA-226		1.3328E+00	1.1676E+00	1.1686E+00	0.925E+00
Th-230	#B	-2.9024E+01	-7.7196E+01	-7.7203E+01	0.113E+02
Th-234	F	1.3944E+00	1.1459E+00	1.1471E+00	0.979E+00
Tl-208	F	2.2733E-01	6.7966E-02	6.8486E-02	0.475E-01
U-235	#B	-4.4655E-01	-6.2466E-01	-6.2488E-01	0.955E-01

- All peaks for activity calculation had bad shape.
* - Activity omitted from total
& - Activity omitted from total and all peaks had bad shape.
< - MDA value printed.
A - Activity printed, but activity < MDA.
B - Activity < MDA and failed test.
C - Area < Critical level.
F - Failed fraction or key line test.
H - Halflife limit exceeded

---------- S U M M A R Y ----------

Total Activity (41.1 to 2612.6 keV) 1.5290545E+01 pCi/g

Laboratory: New World Technology

ORTEC g v - i (3263) wan32 G53W2.06 08-AUG-2008 13:08:45
New World Technology Spectrum name: 6D000002.An1

Sample description
Parcel D 70-PDB-G001237G5-01 342g
7/21/08 10:08

Acquisition information
Start time: 08-Aug-2008 11:48:04
Live time: 2700
Real time: 2703

- -

***** S U M M A R Y O F N U C L I D E S I N S A M P L E *****

Nuclide		Time of Count Activity pCi/g	Uncertainty Counting pCi/g	2 Sigma Total pCi/g	MDA pCi/g
Ac-228	F	4.9947E-01	2.0206E-01	2.0291E-01	0.198E+00
AM-241	#A	-3.5892E-02	-2.5632E-01	-2.5633E-01	0.100E+00
Bi-212	#B	-4.0325E-01	-9.0170E-01	-9.0183E-01	0.417E+00
BI-214	F	5.9005E-01	1.7786E-01	1.7920E-01	0.708E-01
CO-60	#B	-8.5224E-02	-2.8123E-01	-2.8125E-01	0.424E-01
CS-137	#	9.4278E-02	6.6313E-02	6.6405E-02	0.291E-01
EU-152	B	1.0339E-02	7.4125E-02	7.4126E-02	0.901E-01
EU-154	#F	8.7918E-02	9.6768E-02	9.6823E-02	0.684E-01
K-40		7.9809E+00	1.6782E+00	1.7041E+00	0.988E+00
Pa-234	#B	3.4216E-02	1.1032E-01	1.1033E-01	0.108E+00
Pb-210	#F	1.4655E+00	1.5036E+00	1.5046E+00	0.103E+01
Pb-212		3.1639E-01	1.1102E-01	1.1164E-01	0.870E-01
PB-214		5.7068E-01	1.8578E-01	1.8698E-01	0.981E-01
RA-226		1.3901E+00	1.2382E+00	1.2393E+00	0.103E+01
Th-230	#B	-3.8565E+01	3.9547E+04	3.9547E+04	0.113E+02
Th-234	#B	-2.0061E-01	-1.4138E+00	-1.4138E+00	0.989E+00
Tl-208	#F	1.5306E-01	8.2978E-02	8.3172E-02	0.535E-01
U-235	#B	-5.2081E-01	-1.0260E+00	-1.0262E+00	0.947E-01

- All peaks for activity calculation had bad shape.
* - Activity omitted from total
& - Activity omitted from total and all peaks had bad shape.
< - MDA value printed.
A - Activity printed, but activity < MDA.
B - Activity < MDA and failed test.
C - Area < Critical level.
F - Failed fraction or key line test.
H - Halflife limit exceeded

---------- S U M M A R Y ----------

Total Activity (41.1 to 2612.6 keV) 1.1594908E+01 pCi/g

Laboratory: New World Technology

ORTEC g v - i (3263) wan32 G53W2.06 08-AUG-2008 13:31:22
New World Technology Spectrum name: 6D000003.An1

Sample description
Parcel D 70-PDB-G001237G5-01 342g
7/21/08 10:08

Acquisition information
Start time: 08-Aug-2008 12:43:14
Live time: 2700
Real time: 2703

- -

***** S U M M A R Y O F N U C L I D E S I N S A M P L E *****

Nuclide		Time of Count Activity pCi/g	Uncertainty Counting pCi/g	2 Sigma Total pCi/g	MDA pCi/g
Ac-228	F	4.1694E-01	1.6474E-01	1.6546E-01	0.215E+00
AM-241	#A	-1.8414E-02	-1.9994E-01	-1.9994E-01	0.118E+00
Bi-212	#F	4.9934E-01	2.2911E-01	2.2986E-01	0.424E+00
BI-214	F	5.0849E-01	1.6680E-01	1.6786E-01	0.907E-01
CO-60	#B	-5.5369E-02	-1.6326E-01	-1.6327E-01	0.473E-01
CS-137	#B	3.8871E-04	5.3915E-03	5.3915E-03	0.137E-01
EU-152	#B	-4.0063E-03	-3.0080E-02	-3.0080E-02	0.775E-01
EU-154	#B	5.5144E-02	5.7478E-02	5.7514E-02	0.660E-01
K-40		9.1657E+00	1.4552E+00	1.4943E+00	0.732E+00
Pa-234	#F	1.3229E-01	1.0142E-01	1.0154E-01	0.101E+00
Pb-210	#	1.7475E+00	1.3890E+00	1.3905E+00	0.978E+00
Pb-212		3.3913E-01	1.1577E-01	1.1645E-01	0.901E-01
PB-214		5.6688E-01	1.5428E-01	1.5571E-01	0.102E+00
RA-226		1.3049E+00	1.2211E+00	1.2220E+00	0.972E+00
Th-230	#B	-3.7719E+01	-8.7460E+02	-8.7460E+02	0.108E+02
Th-234	B	1.4859E-01	5.1936E-01	5.1939E-01	0.101E+01
Tl-208	#F	1.6894E-01	1.2303E-01	1.2319E-01	0.626E-01
U-235	#B	-5.4550E-01	-1.5489E+00	-1.5490E+00	0.951E-01

- All peaks for activity calculation had bad shape.
* - Activity omitted from total
& - Activity omitted from total and all peaks had bad shape.
< - MDA value printed.
A - Activity printed, but activity < MDA.
B - Activity < MDA and failed test.
C - Area < Critical level.
F - Failed fraction or key line test.
H - Halflife limit exceeded

---------- S U M M A R Y ----------

Total Activity (41.1 to 2612.6 keV) 1.3801565E+01 pCi/g

Laboratory: New World Technology

ORTEC g v - i (3263) wan32 G53W2.06 08-AUG-2008 14:20:25
New World Technology Spectrum name: 6D000004.An1

Sample description
Parcel D 70-PDB-G001237G5-01 342g
7/21/08 10:08

Acquisition information
Start time: 08-Aug-2008 13:33:25
Live time: 2700
Real time: 2703

- -

***** S U M M A R Y O F N U C L I D E S I N S A M P L E *****

Nuclide		Time of Count Activity pCi/g	Uncertainty Counting pCi/g	2 Sigma Total pCi/g	MDA pCi/g
Ac-228	F	5.5004E-01	2.1662E-01	2.1757E-01	0.204E+00
AM-241	#A	-1.8212E-02	-1.9179E-01	-1.9179E-01	0.114E+00
Bi-212	#B	1.7005E-01	1.5209E-01	1.5223E-01	0.405E+00
BI-214	F	5.2080E-01	1.6500E-01	1.6613E-01	0.704E-01
CO-60	#B	-6.4988E-02	-1.6335E-01	-1.6337E-01	0.432E-01
CS-137		4.4424E-02	4.1807E-02	4.1840E-02	0.288E-01
EU-152	#F	1.4296E-01	7.4576E-02	7.4764E-02	0.771E-01
EU-154	F	1.2351E-01	8.3049E-02	8.3175E-02	0.678E-01
K-40		8.1415E+00	1.4043E+00	1.4363E+00	0.875E+00
Pa-234	B	7.4516E-02	1.4843E-01	1.4846E-01	0.968E-01
Pb-210	#F	1.1595E+00	1.4721E+00	1.4727E+00	0.105E+01
Pb-212	F	4.4051E-01	1.2025E-01	1.2136E-01	0.899E-01
PB-214		6.8848E-01	1.7296E-01	1.7483E-01	0.865E-01
RA-226		1.4160E+00	1.1330E+00	1.1343E+00	0.945E+00
Th-230	#B	-3.8565E+01	2.5370E+04	2.5370E+04	0.109E+02
Th-234	B	1.2637E-02	8.8427E-02	8.8428E-02	0.106E+01
Tl-208	F	2.4554E-01	1.0159E-01	1.0199E-01	0.558E-01
U-235	#B	-4.9951E-01	-1.3147E+00	-1.3149E+00	0.962E-01

- All peaks for activity calculation had bad shape.
* - Activity omitted from total
& - Activity omitted from total and all peaks had bad shape.
< - MDA value printed.
A - Activity printed, but activity < MDA.
B - Activity < MDA and failed test.
C - Area < Critical level.
F - Failed fraction or key line test.
H - Halflife limit exceeded

---------- S U M M A R Y ----------

Total Activity (41.1 to 2612.6 keV) 1.2047337E+01 pCi/g

Laboratory: New World Technology

ORTEC g v - i (3263) wan32 G53W2.06 08-AUG-2008 15:08:42
New World Technology Spectrum name: 6D000005.An1

Sample description
Parcel D 70-PDB-G001237G5-01 342g
7/21/08 10:08

Acquisition information
Start time: 08-Aug-2008 14:21:54
Live time: 2700
Real time: 2704

- -

***** S U M M A R Y O F N U C L I D E S I N S A M P L E *****

Nuclide		Time of Count Activity pCi/g	Uncertainty Counting pCi/g	2 Sigma Total pCi/g	MDA pCi/g
Ac-228	F	4.6098E-01	1.5749E-01	1.5842E-01	0.234E+00
AM-241	#A	-1.4450E-02	-1.8791E-01	-1.8791E-01	0.120E+00
Bi-212	F	4.2812E-01	3.4956E-01	3.4992E-01	0.380E+00
BI-214	F	4.0632E-01	1.3561E-01	1.3644E-01	0.616E-01
CO-60	#B	-8.5613E-03	-6.0900E-02	-6.0900E-02	0.473E-01
CS-137	B	1.1717E-02	4.3046E-02	4.3048E-02	0.342E-01
EU-152	F	2.3858E-01	1.6154E-01	1.6178E-01	0.819E-01
EU-154	#F	8.3918E-02	8.4136E-02	8.4194E-02	0.575E-01
K-40		7.8520E+00	1.4658E+00	1.4944E+00	0.782E+00
Pa-234	#B	8.4552E-02	1.0627E-01	1.0631E-01	0.114E+00
Pb-210		2.1015E+00	1.9426E+00	1.9442E+00	0.120E+01
Pb-212		4.8345E-01	1.3325E-01	1.3445E-01	0.930E-01
PB-214		3.4812E-01	1.1819E-01	1.1890E-01	0.103E+00
RA-226		1.3322E+00	1.1468E+00	1.1479E+00	0.953E+00
Th-230	#B	-3.2061E+01	-1.2543E+02	-1.2543E+02	0.118E+02
Th-234	B	1.7927E-01	9.0363E-01	9.0365E-01	0.105E+01
Tl-208	#F	2.3729E-01	1.0746E-01	1.0781E-01	0.567E-01
U-235	#B	-5.4264E-01	-1.4456E+00	-1.4458E+00	0.946E-01

- All peaks for activity calculation had bad shape.
* - Activity omitted from total
& - Activity omitted from total and all peaks had bad shape.
< - MDA value printed.
A - Activity printed, but activity < MDA.
B - Activity < MDA and failed test.
C - Area < Critical level.
F - Failed fraction or key line test.
H - Halflife limit exceeded

---------- S U M M A R Y ----------

Total Activity (41.1 to 2612.6 keV) 1.2999438E+01 pCi/g

Laboratory: New World Technology

ORTEC g v - i (3263) wan32 G53W2.06 11-AUG-2008 09:54:02
New World Technology Spectrum name: 6D000006.An1

Sample description
Parcel D 70-PDB-G001237G5-01 342g
7/21/08 10:08

Acquisition information
Start time: 11-Aug-2008 08:55:25
Live time: 2700
Real time: 2704

- -

***** S U M M A R Y O F N U C L I D E S I N S A M P L E *****

Nuclide		Time of Count Activity pCi/g	Uncertainty Counting pCi/g	2 Sigma Total pCi/g	MDA pCi/g
Ac-228	F	4.2509E-01	2.2748E-01	2.2802E-01	0.208E+00
AM-241	#A	8.0864E-03	1.5054E-01	1.5054E-01	0.111E+00
Bi-212	B	9.4671E-02	2.1169E-01	2.1172E-01	0.359E+00
BI-214	F	6.7437E-01	1.3231E-01	1.3465E-01	0.452E-01
CO-60	#B	-4.9033E-02	-1.3553E-01	-1.3554E-01	0.459E-01
CS-137	B	1.2939E-02	4.2033E-02	4.2036E-02	0.332E-01
EU-152	F	9.9977E-02	1.8711E-01	1.8714E-01	0.962E-01
EU-154	F	7.1988E-02	9.5652E-02	9.5689E-02	0.629E-01
K-40		9.0922E+00	1.3909E+00	1.4312E+00	0.702E+00
Pa-234	#B	2.3923E-02	7.2379E-02	7.2384E-02	0.936E-01
Pb-210	#	2.5155E+00	1.4952E+00	1.4981E+00	0.100E+01
Pb-212	F	4.5877E-01	1.1891E-01	1.2012E-01	0.879E-01
PB-214		4.4216E-01	1.9920E-01	1.9987E-01	0.101E+00
RA-226		1.3198E+00	1.2636E+00	1.2646E+00	0.104E+01
Th-230	#B	-3.3085E+01	-1.2267E+02	-1.2267E+02	0.103E+02
Th-234	#B	-3.8872E-02	-1.5028E+00	-1.5028E+00	0.108E+01
Tl-208	#F	2.4405E-01	1.0587E-01	1.0626E-01	0.571E-01
U-235	#B	-4.9758E-01	-8.3322E-01	-8.3342E-01	0.971E-01

- All peaks for activity calculation had bad shape.
* - Activity omitted from total
& - Activity omitted from total and all peaks had bad shape.
< - MDA value printed.
A - Activity printed, but activity < MDA.
B - Activity < MDA and failed test.
C - Area < Critical level.
F - Failed fraction or key line test.
H - Halflife limit exceeded

---------- S U M M A R Y ----------

Total Activity (41.1 to 2612.6 keV) 1.4746874E+01 pCi/g

Laboratory: New World Technology

ORTEC g v - i (3263) wan32 G53W2.06 11-AUG-2008 10:47:37
New World Technology Spectrum name: 6D000007.An1

Sample description
Parcel D 70-PDB-G001237G5-01 342g
7/21/08 10:08

Acquisition information
Start time: 11-Aug-2008 09:55:55
Live time: 2700
Real time: 2703

- -

***** S U M M A R Y O F N U C L I D E S I N S A M P L E *****

Nuclide		Time of Count Activity pCi/g	Uncertainty Counting pCi/g	2 Sigma Total pCi/g	MDA pCi/g
Ac-228	F	6.4058E-01	2.2034E-01	2.2162E-01	0.221E+00
AM-241		1.2144E-01	1.7459E-01	1.7465E-01	0.118E+00
Bi-212	B	1.8548E-01	1.6590E-01	1.6604E-01	0.446E+00
BI-214	F	5.2969E-01	1.3501E-01	1.3643E-01	0.705E-01
CO-60	#B	-7.7052E-02	-4.9220E-01	-4.9220E-01	0.452E-01
CS-137	B	2.2742E-02	3.5943E-02	3.5953E-02	0.264E-01
EU-152	#F	1.7598E-01	9.8031E-02	9.8248E-02	0.884E-01
EU-154	B	-4.3626E-03	-1.5801E-02	-1.5802E-02	0.665E-01
K-40	#	8.3749E+00	1.3748E+00	1.4094E+00	0.571E+00
Pa-234	F	1.7875E-01	1.8622E-01	1.8634E-01	0.102E+00
Pb-210		1.4569E+00	1.2590E+00	1.2601E+00	0.103E+01
Pb-212	F	3.7906E-01	1.2303E-01	1.2383E-01	0.949E-01
PB-214		4.3088E-01	1.4946E-01	1.5031E-01	0.100E+00
RA-226		1.3655E+00	1.1568E+00	1.1579E+00	0.922E+00
Th-230	#B	-3.2676E+01	-1.3993E+02	-1.3993E+02	0.112E+02
Th-234	B	5.3184E-01	1.0461E+00	1.0463E+00	0.108E+01
Tl-208	F	1.6777E-01	1.0194E-01	1.0213E-01	0.543E-01
U-235	#B	-5.1225E-01	-9.5860E-01	-9.5878E-01	0.962E-01

- All peaks for activity calculation had bad shape.
* - Activity omitted from total
& - Activity omitted from total and all peaks had bad shape.
< - MDA value printed.
A - Activity printed, but activity < MDA.
B - Activity < MDA and failed test.
C - Area < Critical level.
F - Failed fraction or key line test.
H - Halflife limit exceeded

---------- S U M M A R Y ----------

Total Activity (41.1 to 2612.6 keV) 1.3345233E+01 pCi/g

Laboratory: New World Technology

ORTEC g v - i (3263) wan32 G53W2.06 11-AUG-2008 11:36:31
New World Technology Spectrum name: 6D000008.An1

Sample description
Parcel D 70-PDB-G001237G5-01 342g
7/21/08 10:08

Acquisition information
Start time: 11-Aug-2008 10:49:01
Live time: 2700
Real time: 2703

- -

***** S U M M A R Y O F N U C L I D E S I N S A M P L E *****

Nuclide		Time of Count Activity pCi/g	Uncertainty Counting pCi/g	2 Sigma Total pCi/g	MDA pCi/g
Ac-228	F	3.8192E-01	2.2901E-01	2.2945E-01	0.229E+00
AM-241	#A	-4.9209E-02	-4.2607E-01	-4.2608E-01	0.113E+00
Bi-212	#B	3.1484E-01	5.5621E-01	5.5633E-01	0.380E+00
BI-214	F	4.4348E-01	1.5376E-01	1.5464E-01	0.712E-01
CO-60	#B	3.2366E-02	1.1926E-02	1.1986E-02	0.446E-01
CS-137		8.1903E-02	4.4083E-02	4.4187E-02	0.257E-01
EU-152	F	1.0291E-01	1.1608E-01	1.1614E-01	0.688E-01
EU-154	#B	1.8779E-02	2.7175E-02	2.7184E-02	0.528E-01
K-40		8.7595E+00	1.4720E+00	1.5074E+00	0.775E+00
Pa-234	#B	7.4904E-02	6.5076E-02	6.5135E-02	0.100E+00
Pb-210		2.2155E+00	1.4904E+00	1.4926E+00	0.101E+01
Pb-212	F	3.4025E-01	1.2378E-01	1.2442E-01	0.945E-01
PB-214		3.7185E-01	1.1404E-01	1.1487E-01	0.940E-01
RA-226		1.3385E+00	1.1044E+00	1.1055E+00	0.886E+00
Th-230	#B	-3.9052E+01	-5.7697E+02	-5.7697E+02	0.817E+01
Th-234	F	1.0956E+00	1.5038E+00	1.5043E+00	0.107E+01
Tl-208	#F	1.8892E-01	7.6305E-02	7.6626E-02	0.504E-01
U-235	#B	-5.5455E-01	-1.9318E+00	-1.9319E+00	0.959E-01

- All peaks for activity calculation had bad shape.
* - Activity omitted from total
& - Activity omitted from total and all peaks had bad shape.
< - MDA value printed.
A - Activity printed, but activity < MDA.
B - Activity < MDA and failed test.
C - Area < Critical level.
F - Failed fraction or key line test.
H - Halflife limit exceeded

---------- S U M M A R Y ----------

Total Activity (41.1 to 2612.6 keV) 1.4121861E+01 pCi/g

Laboratory: New World Technology

ORTEC g v - i (3263) wan32 G53W2.06 11-AUG-2008 12:25:18
New World Technology Spectrum name: 6D000009.An1

Sample description
Parcel D 70-PDB-G001237G5-01 342g
7/21/08 10:08

Acquisition information
Start time: 11-Aug-2008 11:37:44
Live time: 2700
Real time: 2703

- -

***** S U M M A R Y O F N U C L I D E S I N S A M P L E *****

Nuclide		Time of Count Activity pCi/g	Uncertainty Counting pCi/g	2 Sigma Total pCi/g	MDA pCi/g
Ac-228	F	6.8544E-01	2.3593E-01	2.3729E-01	0.201E+00
AM-241	#A	-1.5144E-03	-1.6794E-01	-1.6794E-01	0.118E+00
Bi-212	B	3.8660E-01	2.5774E-01	2.5813E-01	0.390E+00
BI-214	F	5.3280E-01	1.5580E-01	1.5705E-01	0.666E-01
CO-60	#F	6.7712E-02	4.8605E-02	4.8670E-02	0.421E-01
CS-137	B	1.1243E-02	3.9655E-02	3.9657E-02	0.313E-01
EU-152	B	6.5326E-02	8.8311E-02	8.8344E-02	0.860E-01
EU-154	#F	1.0781E-01	6.8380E-02	6.8496E-02	0.694E-01
K-40		8.7681E+00	1.4997E+00	1.5345E+00	0.843E+00
Pa-234	#B	1.1964E-02	1.5693E-02	1.5700E-02	0.743E-01
Pb-210		2.3055E+00	1.5084E+00	1.5108E+00	0.102E+01
Pb-212	F	4.3166E-01	1.1238E-01	1.1351E-01	0.839E-01
PB-214		4.6261E-01	1.6499E-01	1.6588E-01	0.945E-01
RA-226		1.3586E+00	1.1148E+00	1.1159E+00	0.902E+00
Th-230	#B	-3.7669E+01	-4.5844E+02	-4.5844E+02	0.889E+01
Th-234	B	9.2911E-01	1.5028E+00	1.5032E+00	0.117E+01
Tl-208	F	2.0765E-01	8.0125E-02	8.0493E-02	0.500E-01
U-235	B	-5.1418E-01	-1.0208E+00	-1.0210E+00	0.977E-01

- All peaks for activity calculation had bad shape.
* - Activity omitted from total
& - Activity omitted from total and all peaks had bad shape.
< - MDA value printed.
A - Activity printed, but activity < MDA.
B - Activity < MDA and failed test.
C - Area < Critical level.
F - Failed fraction or key line test.
H - Halflife limit exceeded

---------- S U M M A R Y ----------

Total Activity (41.1 to 2612.6 keV) 1.4820153E+01 pCi/g

Laboratory: New World Technology

ORTEC g v - i (3263) wan32 G53W2.06 11-AUG-2008 14:04:07
New World Technology Spectrum name: 6D000010.An1

Sample description
Parcel D 70-PDB-G001237G5-01 342g
7/21/08 10:08

Acquisition information
Start time: 11-Aug-2008 12:28:00
Live time: 2700
Real time: 2704

- -

***** S U M M A R Y O F N U C L I D E S I N S A M P L E *****

Nuclide		Time of Count Activity pCi/g	Uncertainty Counting pCi/g	2 Sigma Total pCi/g	MDA pCi/g
Ac-228	F	3.4328E-01	2.0679E-01	2.0718E-01	0.198E+00
AM-241	#A	-8.0799E-02	-7.4770E-01	-7.4770E-01	0.826E-01
Bi-212	B	3.4964E-01	2.4723E-01	2.4757E-01	0.368E+00
BI-214	F	5.6481E-01	1.5839E-01	1.5976E-01	0.658E-01
CO-60	#B	-1.7512E-02	-9.1764E-02	-9.1766E-02	0.509E-01
CS-137	B	5.7572E-03	5.1376E-02	5.1376E-02	0.418E-01
EU-152	F	1.0757E-01	1.4504E-01	1.4509E-01	0.855E-01
EU-154	F	1.1559E-01	7.7368E-02	7.7487E-02	0.739E-01
K-40		8.6428E+00	1.5259E+00	1.5592E+00	0.705E+00
Pa-234	B	2.3050E-02	9.6724E-02	9.6728E-02	0.121E+00
Pb-210		1.9755E+00	1.5309E+00	1.5326E+00	0.104E+01
Pb-212	F	4.7101E-01	1.2111E-01	1.2236E-01	0.894E-01
PB-214		4.8732E-01	1.5776E-01	1.5879E-01	0.931E-01
RA-226		1.3675E+00	1.1503E+00	1.1514E+00	0.969E+00
Th-230	#B	-2.3585E+01	-7.2338E+01	-7.2343E+01	0.131E+02
Th-234	#B	-2.2664E-01	-6.9639E-01	-6.9644E-01	0.100E+01
Tl-208	F	1.2111E-01	7.1511E-02	7.1652E-02	0.584E-01
U-235	#B	-4.5362E-01	-1.4678E+00	-1.4679E+00	0.999E-01

- All peaks for activity calculation had bad shape.
* - Activity omitted from total
& - Activity omitted from total and all peaks had bad shape.
< - MDA value printed.
A - Activity printed, but activity < MDA.
B - Activity < MDA and failed test.
C - Area < Critical level.
F - Failed fraction or key line test.
H - Halflife limit exceeded

---------- S U M M A R Y ----------

Total Activity (41.1 to 2612.6 keV) 1.3630018E+01 pCi/g

Laboratory: New World Technology

ATTACHMENT 5

LABORATORY DUPLICATE SAMPLE RESULTS

This page intentionally left blank.

Laboratory Duplicate Results Comparison (pCi/g)

Sample ID	On-site Laboratory						
	Count Time (seconds)	^{226}Ra			Total Activity	Relative Percent Difference	
		Activity	MDA	2σ Error		^{226}Ra	Total Activity
6PBBB026470G3-001	2700	1.626	0.843	1.053	20.605	4.30	7.46
6PBBB026470G3-001dup	2700	1.697	0.901	1.121	19.124		
6PBFS-051A-04	5400	1.712	0.874	1.078	21.163	10.25	7.99
6PBFS-051A-04dup	5400	1.897	0.890	1.105	22.923		
6PBFS-051A-12	2700	1.979	1.080	1.353	24.845	3.73	1.67
6PBFS-051A-12dup	2700	1.907	1.080	1.342	25.264		
6PBFS-055-104	2700	1.995	1.130	1.466	19.221	2.15	4.96
6PBFS-055-104dup	2700	2.038	1.230	1.575	20.198		
6PBFS-055-105	2700	2.310	0.872	1.126	19.863	4.28	0.68
6PBFS-055-105dup	2700	2.213	0.905	1.168	19.999		
6PBFS-055-108	2700	2.127	0.822	1.123	19.222	3.13	3.90
6PBFS-055-108dup	2700	2.062	0.819	1.125	18.487		
6PBFS-055-109	2700	3.450	1.250	1.603	28.025	6.89	1.08
6PBFS-055-109dup	2700	3.221	1.150	1.504	27.723		
6PBFS-055-110	2700	3.103	1.070	1.380	23.840	3.35	3.15
6PBFS-055-110dup	2700	3.001	1.120	1.445	23.101		
6PBFS-055-111	2700	2.436	1.350	1.644	28.273	1.86	4.69
6PBFS-055-111dup	2700	2.391	1.260	1.568	26.977		
6PBFS-055-113	2700	1.795	1.190	1.445	23.364	0.10	4.90
6PBFS-055-113dup	2700	1.797	1.030	1.326	22.247		
6PBFS-055-116	2700	1.811	1.110	1.337	22.042	0.10	7.20
6PBFS-055-116dup	2700	1.813	0.979	1.217	20.509		
70-PDB-B000163G4-01	2700	2.099	1.160	1.427	22.007	4.08	7.21
70-PDB-B000163G4-01dup	2700	2.015	1.160	1.454	23.653		
70-PDB-B000377G4-01	2700	1.779	1.100	1.377	22.035	0.35	1.75
70-PDB-B000377G4-01dup	2700	1.773	1.310	1.548	21.652		
70-PDB-B025997G3-01	2700	3.272	1.010	1.393	23.438	5.25	1.51
70-PDB-B025997G3-01dup	2700	3.105	1.070	1.447	23.796		
70-PDB-G001226G3-01	2700	1.783	0.961	1.223	21.125	2.15	0.01
70-PDB-G001226G3-01dup	2700	1.745	0.982	1.258	21.126		
70-PD-C0048-13	2700	1.920	1.050	1.342	19.449	0.68	13.75
70-PD-C0048-13dup	2700	1.907	1.110	1.425	16.946		
70-PD-C0048-26	5400	2.081	0.901	1.118	21.362	1.74	4.80
70-PD-C0048-26dup	5400	2.045	0.882	1.087	22.412		
70-PD-C0076-10	2700	1.666	0.819	1.083	15.926	4.60	4.80
70-PD-C0076-10dup	2700	1.744	0.736	0.996	15.179		
70-PD-C0080-42	2700	2.687	0.929	1.282	17.232	18.30	5.69
70-PD-C0080-42dup	2700	2.237	0.843	1.164	16.279		
70-PD-C0081-05	5400	1.669	0.560	0.735	17.051	0.86	12.98
70-PD-C0081-05dup	5400	1.683	0.615	0.788	14.973		
70-PD-C0081-23	2700	1.957	0.712	0.938	17.821	0.86	4.34
70-PD-C0081-23dup	2700	1.974	0.830	1.114	17.063		
70-PD-C0081-26	2700	2.463	0.968	1.236	21.374	10.54	1.09
70-PD-C0081-26dup	2700	2.737	1.070	1.364	21.608		
70-PDT-068-130	2700	2.001	1.020	1.272	22.185	3.33	6.39
70-PDT-068-130dup	2700	1.936	0.986	1.260	23.648		
70-PDT-077-99	2700	1.710	1.010	1.315	16.708	0.58	1.20
70-PDT-077-99dup	2700	1.720	0.787	1.081	16.508		
70-PDT-078-33	2700	1.690	0.919	1.128	20.673	2.86	2.62
70-PDT-078-33dup	2700	1.642	0.868	1.109	21.223		
70-PDT-084-22	2700	1.814	1.180	1.450	22.552	0.62	7.58
70-PDT-084-22dup	2700	1.803	1.030	1.337	24.328		
70-PDT-085-30	2700	2.875	1.240	1.551	24.347	2.34	4.60
70-PDT-085-30dup	2700	2.809	1.260	1.610	25.493		
70-PDT-085-31	2700	3.599	1.090	1.487	26.541	0.94	3.34
70-PDT-085-31dup	2700	3.565	1.030	1.400	27.443		
70-PDT-085-33	5400	2.566	0.807	1.061	25.231	3.70	9.82
70-PDT-085-33dup	5400	2.473	0.818	1.043	27.837		
70-PDT-086-33	2700	2.480	1.000	1.316	23.888	4.56	1.13
70-PDT-086-33dup	2700	2.370	0.929	1.253	23.619		
70-PDT-086-61	2700	2.608	1.110	1.403	25.488	0.73	0.24
70-PDT-086-61dup	2700	2.627	1.060	1.315	25.550		
70-PDT-086-62	2700	1.727	0.957	1.210	22.899	5.32	14.51
70-PDT-086-621dup	2700	1.821	1.060	1.337	26.480		

ORTEC g v - i (3263) wan32 G53W2.06 29-FEB-2008 10:15:29
New World Technology Spectrum name: 2N000278.An1

Sample description
Parcel B 6PBBB026470G3-001 373g
2/28/08 13:30

Acquisition information
Start time: 29-Feb-2008 09:30:20
Live time: 2700
Real time: 2703

- -

***** S U M M A R Y O F N U C L I D E S I N S A M P L E *****

Nuclide	Time of Count Activity pCi/g	Uncertainty 2 Sigma Counting pCi/g	Total pCi/g	MDA pCi/g
Ac-228	1.5512E+00	2.4865E-01	2.5523E-01	0.957E-01
AM-241 #B	1.7096E-02	1.0217E-01	1.0217E-01	0.805E-01
Bi-212 #F	1.3512E+00	5.0233E-01	5.0482E-01	0.209E+00
BI-214 F	1.0358E+00	1.9614E-01	1.9987E-01	0.713E-01
CO-60 #B	5.5863E-04	2.6406E-03	2.6406E-03	0.953E-02
CS-137 #B	-1.1851E-02	-7.0791E-02	-7.0793E-02	0.486E-01
EU-152 #F	2.0576E-01	1.0125E-01	1.0154E-01	0.638E-01
EU-154 B	-4.0941E-02	1.4296E+02	1.4296E+02	0.504E-01
K-40	7.4568E+00	1.2332E+00	1.2639E+00	0.489E+00
Pa-234 #B	-8.5799E-03	2.4525E+02	2.4525E+02	0.106E+00
Pb-210	1.2974E+00	1.1386E+00	1.1396E+00	0.784E+00
Pb-212 F	1.3447E+00	1.4244E-01	1.5093E-01	0.664E-01
Pb-214	1.0882E+00	1.9295E-01	1.9713E-01	0.805E-01
RA-226	1.6258E+00	1.0512E+00	1.0529E+00	0.843E+00
Th-230 #B	-2.7719E+00	1.9999E+04	1.9999E+04	0.863E+01
Th-234 #	3.4165E+00	1.1348E+00	1.1418E+00	0.829E+00
Tl-208 F	4.3775E-01	8.8963E-02	9.0435E-02	0.407E-01
U-235 #B	-9.0051E-02	-2.5979E-01	-2.5981E-01	0.682E-01

- All peaks for activity calculation had bad shape.
* - Activity omitted from total
& - Activity omitted from total and all peaks had bad shape.
< - MDA value printed.
A - Activity printed, but activity < MDA.
B - Activity < MDA and failed test.
C - Area < Critical level.
F - Failed fraction or key line test.
H - Halflife limit exceeded

---------- S U M M A R Y ----------

Total Activity (40.2 to 2567.0 keV) 2.0605330E+01 pCi/g

Laboratory: New World Technology

ORTEC g v - i (3263) wan32 G53W2.06 29-FEB-2008 12:48:19
New World Technology Spectrum name: 2N000280.An1

Sample description
Parcel B 6PBBB026470G3-001DUP 373g
2/28/08 13:30

Acquisition information
Start time: 29-Feb-2008 11:51:57
Live time: 2700
Real time: 2703

- -

***** S U M M A R Y O F N U C L I D E S I N S A M P L E *****

Nuclide		Time of Count Activity pCi/g	Uncertainty Counting pCi/g	2 Sigma Total pCi/g	MDA pCi/g
Ac-228		1.4138E+00	2.4566E-01	2.5120E-01	0.125E+00
AM-241	#B	-4.4861E-03	-1.0991E-01	-1.0991E-01	0.836E-01
Bi-212	F	1.0298E+00	4.6245E-01	4.6403E-01	0.293E+00
BI-214	F	8.1541E-01	1.5823E-01	1.6110E-01	0.591E-01
CO-60	#F	2.1156E-02	1.5482E-02	1.5502E-02	0.103E-01
CS-137	#B	-1.7013E-02	-9.2447E-02	-9.2449E-02	0.530E-01
EU-152	F	9.0053E-02	8.1491E-02	8.1559E-02	0.872E-01
EU-154	F	6.1988E-02	5.4668E-02	5.4716E-02	0.570E-01
K-40		7.9212E+00	1.3214E+00	1.3537E+00	0.529E+00
Pa-234	#F	1.5597E-01	1.6146E-01	1.6156E-01	0.857E-01
Pb-210		1.0762E+00	9.8259E-01	9.8340E-01	0.794E+00
Pb-212		1.2714E+00	1.4113E-01	1.4882E-01	0.674E-01
Pb-214		8.5043E-01	1.5203E-01	1.5527E-01	0.814E-01
RA-226		1.6972E+00	1.1188E+00	1.1206E+00	0.901E+00
Th-230	#B	5.6951E+00	1.1296E+01	1.1298E+01	0.784E+01
Th-234	#	2.5671E+00	8.8664E-01	8.9175E-01	0.813E+00
Tl-208		4.8139E-01	1.0078E-01	1.0236E-01	0.434E-01
U-235	#B	-7.5716E-02	-2.0775E-01	-2.0777E-01	0.677E-01

- All peaks for activity calculation had bad shape.
* - Activity omitted from total
& - Activity omitted from total and all peaks had bad shape.
< - MDA value printed.
A - Activity printed, but activity < MDA.
B - Activity < MDA and failed test.
C - Area < Critical level.
F - Failed fraction or key line test.
H - Halflife limit exceeded

---------- S U M M A R Y ----------

Total Activity (40.2 to 2567.0 keV) 1.9123878E+01 pCi/g

Laboratory: New World Technology

ORTEC g v - i (3263) wan32 G53W2.06 08-MAR-2008 12:53:55
New World Technology Spectrum name: 1N000294.An1

Sample description
Parcel B 6PBFS-051A-04 364g
3/06/08 14:22

Acquisition information
Start time: 08-Mar-2008 11:23:41
Live time: 5400
Real time: 5407

- -

***** S U M M A R Y O F N U C L I D E S I N S A M P L E *****

Nuclide		Time of Count Activity pCi/g	Uncertainty Counting pCi/g	2 Sigma Total pCi/g	MDA pCi/g
Ac-228		1.8819E+00	2.6146E-01	2.7061E-01	0.917E-01
AM-241	#A	-8.6818E-01	-6.8083E+00	-6.8083E+00	0.645E+00
Bi-212	F	8.2028E-01	4.0279E-01	4.0394E-01	0.301E+00
BI-214	F	1.0406E+00	1.6970E-01	1.7404E-01	0.718E-01
CO-60	F	4.6908E-02	4.9695E-02	4.9725E-02	0.244E-01
CS-137		4.8601E-02	2.9809E-02	2.9863E-02	0.194E-01
EU-152	A	-4.2619E-02	4.2380E+02	4.2380E+02	0.914E-01
EU-154	C	8.0598E-02	8.8796E-02	8.8846E-02	0.635E-01
K-40		1.2241E+01	1.1703E+00	1.2552E+00	0.460E+00
Pa-234	#B	4.4980E-03	9.7168E-03	9.7182E-03	0.115E+00
Pb-210	#F	0.0000E+00	0.0000E+00	0.0000E+00	0.000E+00
Pb-212	F	1.5596E+00	1.3679E-01	1.4852E-01	0.773E-01
Pb-214		1.2177E+00	1.9717E-01	2.0228E-01	0.920E-01
RA-226		1.7115E+00	1.0764E+00	1.0783E+00	0.874E+00
Th-230	#B	-1.2242E+01	-7.0281E+01	-7.0283E+01	0.260E+02
Th-234	B	-6.3099E+00	-1.8244E+01	-1.8245E+01	0.328E+01
Tl-208		6.4120E-01	1.0300E-01	1.0571E-01	0.135E-01
U-235	B	-1.2666E+00	-5.2272E+00	-5.2275E+00	0.108E+00

- All peaks for activity calculation had bad shape.
* - Activity omitted from total
& - Activity omitted from total and all peaks had bad shape.
< - MDA value printed.
A - Activity printed, but activity < MDA.
B - Activity < MDA and failed test.
C - Area < Critical level.
F - Failed fraction or key line test.
H - Halflife limit exceeded

---------- S U M M A R Y ----------

Total Activity (41.2 to 2630.1 keV) 2.1162849E+01 pCi/g

Laboratory: New World Technology

ORTEC g v - i (3263) wan32 G53W2.06 08-MAR-2008 15:33:35
New World Technology Spectrum name: 1N000296.An1

Sample description
Parcel B 6PBFS-051A-04DUP 364g
3/06/08 14:22

Acquisition information
Start time: 08-Mar-2008 14:03:22
Live time: 5400
Real time: 5407

- -

***** S U M M A R Y O F N U C L I D E S I N S A M P L E *****

Nuclide	Time of Count Activity pCi/g	Uncertainty 2 Sigma Counting pCi/g	Total pCi/g	MDA pCi/g
Ac-228	1.7559E+00	2.7989E-01	2.8736E-01	0.101E+00
AM-241 #A	-4.7506E-01	-1.7631E+00	-1.7632E+00	0.614E+00
Bi-212 F	1.1153E+00	3.5266E-01	3.5508E-01	0.210E+00
BI-214 F	1.1874E+00	1.4174E-01	1.4843E-01	0.659E-01
CO-60 #B	1.3773E-02	2.2849E-02	2.2855E-02	0.157E-01
CS-137 F	3.9377E-02	4.1841E-02	4.1866E-02	0.317E-01
EU-152 C	8.9470E-02	9.3266E-02	9.3324E-02	0.740E-01
EU-154 A	2.3987E-02	8.2144E-02	8.2148E-02	0.679E-01
K-40	1.3586E+01	1.2464E+00	1.3444E+00	0.422E+00
Pa-234 #F	1.8049E-01	1.6511E-01	1.6525E-01	0.133E+00
Pb-210 #F	0.0000E+00	0.0000E+00	0.0000E+00	0.000E+00
Pb-212 F	1.5544E+00	1.3499E-01	1.4678E-01	0.770E-01
Pb-214	1.1388E+00	1.2981E-01	1.3651E-01	0.789E-01
RA-226	1.8965E+00	1.1031E+00	1.1053E+00	0.890E+00
Th-230 B	-1.9778E+01	-1.4143E+02	-1.4143E+02	0.284E+02
Th-234 #B	-7.6615E+00	-3.6213E+01	-3.6214E+01	0.359E+01
Tl-208	6.8855E-01	1.0753E-01	1.1052E-01	0.135E-01
U-235 #B	-1.2802E+00	-7.9870E+00	-7.9872E+00	0.106E+00

- All peaks for activity calculation had bad shape.
* - Activity omitted from total
& - Activity omitted from total and all peaks had bad shape.
< - MDA value printed.
A - Activity printed, but activity < MDA.
B - Activity < MDA and failed test.
C - Area < Critical level.
F - Failed fraction or key line test.
H - Halflife limit exceeded

---------- S U M M A R Y ----------

Total Activity (41.2 to 2630.1 keV) 2.2923214E+01 pCi/g

Laboratory: New World Technology

ORTEC g v - i (3263) wan32 G53W2.06 11-MAR-2008 07:05:30
New World Technology Spectrum name: An120E.An1

Sample description
Parcel B 6PBFS-051A-12 326g
3/07/08 07:44

Acquisition information
Start time: 10-Mar-2008 16:22:48
Live time: 2700
Real time: 2704

- -

***** S U M M A R Y O F N U C L I D E S I N S A M P L E *****

Nuclide		Time of Count Activity pCi/g	Uncertainty Counting pCi/g	2 Sigma Total pCi/g	MDA pCi/g
Ac-228	F	5.1493E-01	2.1245E-01	2.1330E-01	0.238E+00
AM-241	#A	-7.3778E-02	-8.1008E-01	-8.1009E-01	0.139E+00
Bi-212	#F	4.2843E-01	2.5835E-01	2.5884E-01	0.410E+00
BI-214	F	6.3857E-01	1.8176E-01	1.8329E-01	0.803E-01
CO-60	#B	-9.0966E-03	-2.3271E-02	-2.3273E-02	0.147E-01
CS-137	F	4.1124E-02	4.4416E-02	4.4442E-02	0.317E-01
EU-152	F	9.4771E-02	8.9797E-02	8.9866E-02	0.878E-01
EU-154	F	1.1534E-01	1.4545E-01	1.4552E-01	0.776E-01
K-40		1.7345E+01	2.0955E+00	2.1921E+00	0.799E+00
Pa-234	F	2.2612E-01	2.0260E-01	2.0278E-01	0.133E+00
Pb-210		3.0311E+00	1.4386E+00	1.4430E+00	0.108E+01
Pb-212		5.3752E-01	1.1851E-01	1.2018E-01	0.842E-01
PB-214		5.5757E-01	1.4659E-01	1.4804E-01	0.945E-01
RA-226		1.9794E+00	1.3513E+00	1.3533E+00	0.108E+01
Th-230	#B	-3.2224E+01	-1.8866E+02	-1.8866E+02	0.117E+02
Th-234	F	1.1117E+00	1.1783E+00	1.1790E+00	0.108E+01
Tl-208	#F	2.4041E-01	9.9613E-02	1.0001E-01	0.554E-01
U-235	B	-5.4152E-01	-1.2330E+00	-1.2331E+00	0.107E+00

- All peaks for activity calculation had bad shape.
* - Activity omitted from total
& - Activity omitted from total and all peaks had bad shape.
< - MDA value printed.
A - Activity printed, but activity < MDA.
B - Activity < MDA and failed test.
C - Area < Critical level.
F - Failed fraction or key line test.
H - Halflife limit exceeded

---------- S U M M A R Y ----------

Total Activity (41.1 to 2612.4 keV) 2.4844769E+01 pCi/g

Laboratory: New World Technology

ORTEC g v - i (3263) wan32 G53W2.06 11-MAR-2008 06:56:36
New World Technology Spectrum name: An121A.An1

Sample description
Parcel B 6PBFS-051A-12DUP 326g
3/07/08 07:44

Acquisition information
Start time: 10-Mar-2008 21:16:48
Live time: 2700
Real time: 2703

- -

***** S U M M A R Y O F N U C L I D E S I N S A M P L E *****

Nuclide		Time of Count Activity pCi/g	Uncertainty Counting pCi/g	2 Sigma Total pCi/g	MDA pCi/g
Ac-228	F	8.0080E-01	2.3719E-01	2.3905E-01	0.224E+00
AM-241	#A	-3.7548E-02	-2.4793E-01	-2.4793E-01	0.107E+00
Bi-212	#B	1.3909E-01	1.9447E-01	1.9454E-01	0.350E+00
BI-214	F	7.2199E-01	2.1121E-01	2.1290E-01	0.882E-01
CO-60	#B	-5.1467E-03	-1.8253E-02	-1.8254E-02	0.111E-01
CS-137	B	2.6641E-03	4.1543E-02	4.1543E-02	0.339E-01
EU-152	F	2.5042E-01	1.1925E-01	1.1961E-01	0.111E+00
EU-154	B	6.5604E-02	6.6954E-02	6.6999E-02	0.837E-01
K-40		1.7717E+01	2.3540E+00	2.4441E+00	0.952E+00
Pa-234	B	1.0217E-01	1.3901E-01	1.3907E-01	0.120E+00
Pb-210		2.7733E+00	1.5552E+00	1.5586E+00	0.119E+01
Pb-212	F	5.9275E-01	1.2618E-01	1.2808E-01	0.872E-01
PB-214		5.1625E-01	1.1932E-01	1.2085E-01	0.102E+00
RA-226		1.9070E+00	1.3400E+00	1.3419E+00	0.108E+01
Th-230	#B	-2.5944E+01	-8.1801E+01	-8.1807E+01	0.116E+02
Th-234	B	9.7266E-01	1.2438E+00	1.2443E+00	0.107E+01
Tl-208	F	2.3495E-01	9.8080E-02	9.8466E-02	0.551E-01
U-235	#B	-5.8354E-01	-2.5197E+00	-2.5198E+00	0.107E+00

- All peaks for activity calculation had bad shape.
* - Activity omitted from total
& - Activity omitted from total and all peaks had bad shape.
< - MDA value printed.
A - Activity printed, but activity < MDA.
B - Activity < MDA and failed test.
C - Area < Critical level.
F - Failed fraction or key line test.
H - Halflife limit exceeded

---------- S U M M A R Y ----------

Total Activity (41.1 to 2612.4 keV) 2.5264385E+01 pCi/g

Laboratory: New World Technology

ORTEC g v - i (3263) wan32 G53W2.06 07-MAR-2008 10:11:13
New World Technology Spectrum name: An13CE.An1

Sample description
Parcel B 6PBFS-055-104 370g
2/22/08 08:40

Acquisition information
Start time: 05-Mar-2008 08:34:01
Live time: 2700
Real time: 2703

- -

***** S U M M A R Y O F N U C L I D E S I N S A M P L E *****

Nuclide		Time of Count Activity pCi/g	Uncertainty Counting pCi/g	2 Sigma Total pCi/g	MDA pCi/g
Ac-228		1.6169E+00	2.5034E-01	2.5742E-01	0.121E+00
AM-241	#A	-4.3367E-01	-2.4191E+00	-2.4192E+00	0.804E+00
Bi-212	B	0.0000E+00	1.0660E+03	1.0660E+03	0.460E+00
BI-214	F	1.4661E+00	2.2298E-01	2.2952E-01	0.640E-01
CO-60	#F	6.6174E-02	5.9606E-02	5.9657E-02	0.271E-01
CS-137		7.6124E-02	4.4057E-02	4.4148E-02	0.249E-01
EU-152	A	1.2477E-01	1.2534E-01	1.2542E-01	0.129E+00
EU-154		1.2966E-01	1.0776E-01	1.0787E-01	0.824E-01
K-40		1.0817E+01	1.5920E+00	1.6418E+00	0.588E+00
Pa-234	F	2.0618E-01	1.3638E-01	1.3659E-01	0.171E+00
Pb-210	F	0.0000E+00	0.0000E+00	0.0000E+00	0.000E+00
Pb-212	F	1.3222E+00	1.6851E-01	1.7550E-01	0.100E+00
Pb-214		1.1136E+00	2.5990E-01	2.6316E-01	0.121E+00
RA-226		1.9946E+00	1.4639E+00	1.4657E+00	0.113E+01
Th-230	B	-3.1008E+01	9.4280E+04	9.4280E+04	0.312E+02
Th-234	#B	-4.8796E+00	-1.7532E+01	-1.7533E+01	0.460E+01
Tl-208		6.1875E-01	1.4194E-01	1.4378E-01	0.187E-01
U-235	#B	-1.1759E+00	-2.1614E+00	-2.1619E+00	0.147E+00

- All peaks for activity calculation had bad shape.
* - Activity omitted from total
& - Activity omitted from total and all peaks had bad shape.
< - MDA value printed.
A - Activity printed, but activity < MDA.
B - Activity < MDA and failed test.
C - Area < Critical level.
F - Failed fraction or key line test.
H - Halflife limit exceeded

---------- S U M M A R Y ----------

Total Activity (41.2 to 2630.1 keV) 1.9221100E+01 pCi/g

Laboratory: New World Technology

ORTEC g v - i (3263) wan32 G53W2.06 07-MAR-2008 10:06:44
New World Technology Spectrum name: An13D2.An1

Sample description
Parcel B 6PBFS-055-104DUP 370g
2/22/08 08:40

Acquisition information
Start time: 05-Mar-2008 10:30:19
Live time: 2700
Real time: 2703

- -

***** S U M M A R Y O F N U C L I D E S I N S A M P L E *****

Nuclide		Time of Count Activity pCi/g	Uncertainty Counting pCi/g	2 Sigma Total pCi/g	MDA pCi/g
Ac-228	F	1.6006E+00	2.9688E-01	3.0275E-01	0.122E+00
AM-241	#A	-5.9165E-01	-3.1855E+00	-3.1856E+00	0.781E+00
Bi-212	F	9.6443E-01	5.5710E-01	5.5824E-01	0.355E+00
BI-214	F	1.4101E+00	2.0535E-01	2.1191E-01	0.640E-01
CO-60	#B	5.5985E-03	8.8160E-03	8.8184E-03	0.120E-01
CS-137		1.0599E-01	4.9360E-02	4.9517E-02	0.260E-01
EU-152	C	2.1696E-01	1.1927E-01	1.1954E-01	0.131E+00
EU-154	A	3.1505E-02	1.0580E-01	1.0581E-01	0.941E-01
K-40		1.0956E+01	1.4888E+00	1.5433E+00	0.502E+00
Pa-234	#B	1.2420E-01	1.3144E-01	1.3152E-01	0.126E+00
Pb-210	#F	0.0000E+00	0.0000E+00	0.0000E+00	0.000E+00
Pb-212	F	1.3901E+00	1.7557E-01	1.8298E-01	0.101E+00
Pb-214		1.1085E+00	1.7792E-01	1.8261E-01	0.109E+00
RA-226		2.0379E+00	1.5731E+00	1.5749E+00	0.123E+01
Th-230	B	-1.1757E+01	-2.0587E+01	-2.0592E+01	0.261E+02
Th-234	B	-3.7444E+00	-3.5091E+00	-3.5118E+00	0.424E+01
Tl-208		6.2477E-01	1.4147E-01	1.4336E-01	0.187E-01
U-235	B	-1.1873E+00	-2.4398E+00	-2.4402E+00	0.147E+00

- All peaks for activity calculation had bad shape.
* - Activity omitted from total
& - Activity omitted from total and all peaks had bad shape.
< - MDA value printed.
A - Activity printed, but activity < MDA.
B - Activity < MDA and failed test.
C - Area < Critical level.
F - Failed fraction or key line test.
H - Halflife limit exceeded

---------- S U M M A R Y ----------

Total Activity (41.2 to 2630.1 keV) 2.0198463E+01 pCi/g

Laboratory: New World Technology

ORTEC g v - i (3263) wan32 G53W2.06 28-FEB-2008 23:34:57
New World Technology Spectrum name: 2N000277.An1

Sample description
Parcel B 6PBFS-055-105 383g
2/28/08 11:46

Acquisition information
Start time: 28-Feb-2008 22:49:48
Live time: 2700
Real time: 2702

- -

***** S U M M A R Y O F N U C L I D E S I N S A M P L E *****

Nuclide		Time of Count Activity pCi/g	Uncertainty 2 Sigma Counting pCi/g	Total pCi/g	MDA pCi/g
Ac-228	F	1.5064E+00	2.5213E-01	2.5826E-01	0.114E+00
AM-241	#B	9.0815E-04	9.5229E-02	9.5229E-02	0.788E-01
Bi-212	F	1.2764E+00	4.3633E-01	4.3890E-01	0.236E+00
BI-214	F	1.0213E+00	1.6658E-01	1.7084E-01	0.518E-01
CO-60	#B	7.6341E-04	3.1549E-03	3.1550E-03	0.929E-02
CS-137	#B	-1.6561E-02	-6.8217E-02	-6.8220E-02	0.427E-01
EU-152	F	8.5154E-02	6.0078E-02	6.0161E-02	0.699E-01
EU-154	B	4.3941E-02	3.0656E-02	3.0700E-02	0.542E-01
K-40		9.5455E+00	1.3578E+00	1.4032E+00	0.476E+00
Pa-234	B	6.1810E-02	1.0071E-01	1.0074E-01	0.937E-01
Pb-210	#	1.3156E+00	1.2983E+00	1.2993E+00	0.878E+00
Pb-212	F	1.3607E+00	1.4065E-01	1.4944E-01	0.653E-01
Pb-214		1.0688E+00	1.8573E-01	1.8992E-01	0.103E+00
RA-226		2.3099E+00	1.1231E+00	1.1264E+00	0.872E+00
Th-230	#B	-2.6996E+00	2.0735E+04	2.0735E+04	0.707E+01
Th-234	F	1.3894E+00	1.3990E+00	1.4000E+00	0.905E+00
Tl-208	F	4.5857E-01	9.1695E-02	9.3262E-02	0.407E-01
U-235	B	-2.6165E-02	-3.1317E-02	-3.1332E-02	0.679E-01

- All peaks for activity calculation had bad shape.
* - Activity omitted from total
& - Activity omitted from total and all peaks had bad shape.
< - MDA value printed.
A - Activity printed, but activity < MDA.
B - Activity < MDA and failed test.
C - Area < Critical level.
F - Failed fraction or key line test.
H - Halflife limit exceeded

---------- S U M M A R Y ----------

Total Activity (40.2 to 2567.0 keV) 1.9863091E+01 pCi/g

Laboratory: New World Technology

ORTEC g v - i (3263) wan32 G53W2.06 29-FEB-2008 11:38:21
New World Technology Spectrum name: 2N000279.An1

Sample description
Parcel B 6PBFS-055-105DUP 383g
2/28/08 11:46

Acquisition information
Start time: 29-Feb-2008 10:41:23
Live time: 2700
Real time: 2703

- -

***** S U M M A R Y O F N U C L I D E S I N S A M P L E *****

Nuclide		Time of Count Activity pCi/g	Uncertainty Counting pCi/g	2 Sigma Total pCi/g	MDA pCi/g
Ac-228		1.4045E+00	2.6842E-01	2.7343E-01	0.936E-01
AM-241	#B	-6.8717E-02	3.0983E+02	3.0983E+02	0.846E-01
Bi-212		1.2514E+00	4.7593E-01	4.7820E-01	0.255E+00
BI-214	F	8.4859E-01	1.5812E-01	1.6122E-01	0.746E-01
CO-60	#B	7.2514E-04	1.9677E-03	1.9679E-03	0.124E-01
CS-137	#B	-1.5716E-02	-8.5335E-02	-8.5337E-02	0.506E-01
EU-152	#B	-3.4318E-03	1.5226E+02	1.5226E+02	0.657E-01
EU-154	F	9.6670E-02	5.9732E-02	5.9840E-02	0.632E-01
K-40	#	9.5455E+00	1.3578E+00	1.4032E+00	0.476E+00
Pa-234	B	8.5557E-02	9.7777E-02	9.7828E-02	0.102E+00
Pb-210		1.9213E+00	1.2024E+00	1.2046E+00	0.784E+00
Pb-212		1.3560E+00	1.4161E-01	1.5029E-01	0.659E-01
Pb-214		9.5789E-01	1.6705E-01	1.7080E-01	0.723E-01
RA-226		2.2131E+00	1.1647E+00	1.1676E+00	0.905E+00
Th-230	#B	-2.7486E+00	-8.4880E+01	-8.4880E+01	0.421E+01
Th-234	F	2.2441E+00	8.4582E-01	8.4992E-01	0.904E+00
Tl-208	F	5.0038E-01	1.0225E-01	1.0392E-01	0.447E-01
U-235	#B	-1.1578E-01	-5.8901E-01	-5.8903E-01	0.728E-01

- All peaks for activity calculation had bad shape.
* - Activity omitted from total
& - Activity omitted from total and all peaks had bad shape.
< - MDA value printed.
A - Activity printed, but activity < MDA.
B - Activity < MDA and failed test.
C - Area < Critical level.
F - Failed fraction or key line test.
H - Halflife limit exceeded

---------- S U M M A R Y ----------

Total Activity (40.2 to 2567.0 keV) 1.9998617E+01 pCi/g

Laboratory: New World Technology

ORTEC g v - i (3263) wan32 G53W2.06 08-MAR-2008 12:54:49
New World Technology Spectrum name: An13CD.An1

Sample description
Parcel B 6PBFS-055-108 356g
2/28/08 11:23

Acquisition information
Start time: 07-Mar-2008 15:31:04
Live time: 2700
Real time: 2704

- -

***** S U M M A R Y O F N U C L I D E S I N S A M P L E *****

Nuclide		Time of Count Activity pCi/g	Uncertainty Counting pCi/g	2 Sigma Total pCi/g	MDA pCi/g
Ac-228		1.4392E+00	2.6751E-01	2.7279E-01	0.638E-01
AM-241	B	2.1426E-02	1.1161E-01	1.1161E-01	0.936E-01
Bi-212	B	-2.9156E-01	2.0493E+03	2.0493E+03	0.460E+00
BI-214	F	1.0329E+00	2.1252E-01	2.1594E-01	0.767E-01
CO-60	#F	4.4122E-02	3.1066E-02	3.1109E-02	0.154E-01
CS-137	B	2.5034E-02	4.9125E-02	4.9134E-02	0.376E-01
EU-152	F	1.5532E-01	8.9674E-02	8.9859E-02	0.954E-01
EU-154	F	2.4968E-01	1.2484E-01	1.2518E-01	0.652E-01
K-40	#	1.0056E+01	1.5452E+00	1.5896E+00	0.389E+00
Pa-234	#B	-4.8508E-02	4.5393E+02	4.5393E+02	0.108E+00
Pb-210		1.9344E+00	1.5546E+00	1.5562E+00	0.935E+00
Pb-212		1.1997E+00	1.4804E-01	1.5459E-01	0.838E-01
PB-214	F	7.1995E-01	1.6969E-01	1.7178E-01	0.951E-01
RA-226		2.1273E+00	1.1201E+00	1.1229E+00	0.822E+00
Th-230	#B	-5.6221E+00	-1.6072E+02	-1.6072E+02	0.562E+01
Th-234	F	1.0086E+00	8.1938E-01	8.2023E-01	0.754E+00
Tl-208	F	4.1851E-01	8.4165E-02	8.5585E-02	0.633E-01
U-235	F	5.5790E-02	8.3121E-02	8.3146E-02	0.528E-01

- All peaks for activity calculation had bad shape.
* - Activity omitted from total
& - Activity omitted from total and all peaks had bad shape.
< - MDA value printed.
A - Activity printed, but activity < MDA.
B - Activity < MDA and failed test.
C - Area < Critical level.
F - Failed fraction or key line test.
H - Halflife limit exceeded

---------- S U M M A R Y ----------

Total Activity (42.5 to 2705.0 keV) 1.9221844E+01 pCi/g

Laboratory: New World Technology

ORTEC g v - i (3263) wan32 G53W2.06 11-MAR-2008 11:23:42
New World Technology Spectrum name: An13D1.An1

Sample description
Parcel B 6PBFS-055-108DUP 356g
2/28/08 11:23

Acquisition information
Start time: 07-Mar-2008 17:33:33
Live time: 2700
Real time: 2704

- -

***** S U M M A R Y O F N U C L I D E S I N S A M P L E *****

Nuclide		Time of Count Activity pCi/g	Uncertainty Counting pCi/g	2 Sigma Total pCi/g	MDA pCi/g
Ac-228	F	1.4222E+00	2.3118E-01	2.3713E-01	0.108E+00
AM-241	B	4.8358E-02	1.1380E-01	1.1382E-01	0.942E-01
Bi-212	F	1.0159E+00	4.6056E-01	4.6210E-01	0.305E+00
BI-214	F	1.0556E+00	2.0053E-01	2.0432E-01	0.509E-01
CO-60	#F	2.6204E-02	2.5382E-02	2.5401E-02	0.154E-01
CS-137	B	5.6612E-03	4.0147E-02	4.0148E-02	0.323E-01
EU-152	B	6.9683E-02	5.6896E-02	5.6954E-02	0.877E-01
EU-154	F	1.5222E-01	1.2495E-01	1.2508E-01	0.590E-01
K-40		9.4132E+00	1.3738E+00	1.4175E+00	0.122E+00
Pa-234	F	2.7354E-01	1.9934E-01	1.9960E-01	0.109E+00
Pb-210	#B	-1.5385E+00	-7.1009E+00	-7.1011E+00	0.952E+00
Pb-212		1.2092E+00	1.5096E-01	1.5749E-01	0.821E-01
PB-214		7.1051E-01	1.3652E-01	1.3905E-01	0.891E-01
RA-226		2.0618E+00	1.1223E+00	1.1249E+00	0.819E+00
Th-230	F	1.0453E+01	1.4028E+01	1.4033E+01	0.776E+01
Th-234	F	9.3843E-01	9.3485E-01	9.3550E-01	0.765E+00
Tl-208	F	3.6037E-01	5.9363E-02	6.0850E-02	0.489E-01
U-235	F	1.5405E-01	1.1877E-01	1.1891E-01	0.573E-01

- All peaks for activity calculation had bad shape.
* - Activity omitted from total
& - Activity omitted from total and all peaks had bad shape.
< - MDA value printed.
A - Activity printed, but activity < MDA.
B - Activity < MDA and failed test.
C - Area < Critical level.
F - Failed fraction or key line test.
H - Halflife limit exceeded

---------- S U M M A R Y ----------

Total Activity (42.5 to 2705.0 keV) 1.8486923E+01 pCi/g

Laboratory: New World Technology

ORTEC g v - i (3263) wan32 G53W2.06 07-MAR-2008 13:57:29
New World Technology Spectrum name: An13EB.An1

Sample description
Parcel B 6PBFS-055-109 372g
2/28/08 11:09

Acquisition information
Start time: 07-Mar-2008 12:56:28
Live time: 2700
Real time: 2704

- -

***** S U M M A R Y O F N U C L I D E S I N S A M P L E *****

Nuclide		Time of Count Activity pCi/g	Uncertainty Counting pCi/g	2 Sigma Total pCi/g	MDA pCi/g
Ac-228	F	1.6918E+00	3.8515E-01	3.9022E-01	0.172E+00
AM-241	A	1.0670E-01	1.7640E-01	1.7644E-01	0.145E+00
Bi-212		9.9910E-01	4.6136E-01	4.6284E-01	0.421E+00
BI-214		1.3190E+00	2.4189E-01	2.4677E-01	0.103E+00
CO-60	#B	-8.6988E-02	-7.9797E-01	-7.9798E-01	0.445E-01
CS-137	#F	6.1044E-02	6.5687E-02	6.5726E-02	0.378E-01
EU-152	F	2.2367E-01	1.8796E-01	1.8814E-01	0.900E-01
EU-154	F	9.1123E-02	1.1024E-01	1.1029E-01	0.803E-01
K-40		1.1039E+01	1.4806E+00	1.5360E+00	0.681E+00
Pa-234	B	1.2830E-01	1.1511E-01	1.1521E-01	0.152E+00
Pb-210		2.8785E+00	1.4108E+00	1.4148E+00	0.110E+01
Pb-212	F	1.7175E+00	1.8106E-01	1.9191E-01	0.970E-01
PB-214		1.2015E+00	2.5186E-01	2.5576E-01	0.121E+00
RA-226		3.4504E+00	1.5976E+00	1.6027E+00	0.125E+01
Th-230	B	5.3141E+00	1.4856E+01	1.4857E+01	0.125E+02
Th-234		3.1421E+00	1.1158E+00	1.1218E+00	0.115E+01
Tl-208	#F	5.8576E-01	1.2386E-01	1.2574E-01	0.390E-01
U-235	B	-9.2712E-01	-1.9046E+00	-1.9049E+00	0.128E+00

- All peaks for activity calculation had bad shape.
* - Activity omitted from total
& - Activity omitted from total and all peaks had bad shape.
< - MDA value printed.
A - Activity printed, but activity < MDA.
B - Activity < MDA and failed test.
C - Area < Critical level.
F - Failed fraction or key line test.
H - Halflife limit exceeded

---------- S U M M A R Y ----------

Total Activity (42.7 to 3401.5 keV) 2.8024893E+01 pCi/g

Laboratory: New World Technology

ORTEC g v - i (3263) wan32 G53W2.06 08-MAR-2008 13:49:47
New World Technology Spectrum name: An13F0.An1

Sample description
Parcel B 6PBFS-055-109DUP 372g
2/28/08 11:09

Acquisition information
Start time: 07-Mar-2008 15:23:04
Live time: 2700
Real time: 2704

- -

***** S U M M A R Y O F N U C L I D E S I N S A M P L E *****

Nuclide		Time of Count Activity pCi/g	Uncertainty Counting pCi/g	2 Sigma Total pCi/g	MDA pCi/g
Ac-228	F	1.7586E+00	3.6871E-01	3.7443E-01	0.133E+00
AM-241	A	3.9455E-02	1.8016E-01	1.8016E-01	0.150E+00
Bi-212	F	8.2129E-01	5.1209E-01	5.1299E-01	0.411E+00
BI-214		1.4040E+00	2.3111E-01	2.3689E-01	0.902E-01
CO-60	#B	4.4021E-03	1.7538E-02	1.7538E-02	0.539E-01
CS-137	B	1.6590E-02	6.1193E-02	6.1196E-02	0.490E-01
EU-152	F	2.1856E-01	9.2456E-02	9.2808E-02	0.105E+00
EU-154	F	1.2940E-01	1.3418E-01	1.3427E-01	0.774E-01
K-40		1.0088E+01	1.6254E+00	1.6678E+00	0.777E+00
Pa-234	F	2.2463E-01	1.5298E-01	1.5320E-01	0.156E+00
Pb-210		3.0742E+00	2.0946E+00	2.0977E+00	0.130E+01
Pb-212		1.7395E+00	1.7653E-01	1.8792E-01	0.915E-01
PB-214		1.4088E+00	1.8761E-01	1.9474E-01	0.895E-01
RA-226		3.2205E+00	1.4995E+00	1.5042E+00	0.115E+01
Th-230	#B	-1.0533E+01	-7.6525E+01	-7.6526E+01	0.127E+02
Th-234		3.6074E+00	1.3956E+00	1.4019E+00	0.117E+01
Tl-208	F	6.0065E-01	1.1385E-01	1.1601E-01	0.390E-01
U-235	#B	-9.4140E-01	-2.2915E+00	-2.2918E+00	0.130E+00

- All peaks for activity calculation had bad shape.
* - Activity omitted from total
& - Activity omitted from total and all peaks had bad shape.
< - MDA value printed.
A - Activity printed, but activity < MDA.
B - Activity < MDA and failed test.
C - Area < Critical level.
F - Failed fraction or key line test.
H - Halflife limit exceeded

---------- S U M M A R Y ----------

Total Activity (42.7 to 3401.5 keV) 2.7722847E+01 pCi/g

Laboratory: New World Technology

ORTEC g v - i (3263) wan32 G53W2.06 29-FEB-2008 10:31:33
New World Technology Spectrum name: 6N000226.An1

Sample description
Parcel B 6PBFS-055-110 367g
2/28/08 11:03

Acquisition information
Start time: 29-Feb-2008 09:19:44
Live time: 2700
Real time: 2705

- -

***** S U M M A R Y O F N U C L I D E S I N S A M P L E *****

Nuclide		Time of Count Activity pCi/g	Uncertainty Counting pCi/g	2 Sigma Total pCi/g	MDA pCi/g
Ac-228	F	1.3258E+00	2.6501E-01	2.6955E-01	0.209E+00
AM-241	#A	-8.8456E-03	-1.6510E-01	-1.6510E-01	0.116E+00
Bi-212	B	2.9922E-01	4.3907E-01	4.3921E-01	0.386E+00
BI-214	F	1.2396E+00	2.1033E-01	2.1532E-01	0.757E-01
CO-60	#B	5.1978E-03	9.4512E-03	9.4532E-03	0.107E-01
CS-137	B	3.9179E-02	5.2346E-02	5.2366E-02	0.396E-01
EU-152	B	9.0321E-02	9.1670E-02	9.1732E-02	0.984E-01
EU-154	F	8.3571E-02	9.3056E-02	9.3107E-02	0.800E-01
K-40		1.1922E+01	1.8227E+00	1.8758E+00	0.827E+00
Pa-234	#B	8.0600E-02	1.3588E-01	1.3592E-01	0.111E+00
Pb-210		3.2955E+00	1.4512E+00	1.4564E+00	0.112E+01
Pb-212	F	1.4797E+00	1.5889E-01	1.6813E-01	0.891E-01
PB-214		1.0576E+00	2.2628E-01	2.2967E-01	0.113E+00
RA-226		3.1027E+00	1.3753E+00	1.3801E+00	0.107E+01
Th-230	#B	-1.8619E+01	-5.6592E+01	-5.6596E+01	0.124E+02
Th-234	F	1.2132E+00	9.2000E-01	9.2110E-01	0.110E+01
Tl-208	F	4.1732E-01	9.7907E-02	9.9127E-02	0.663E-01
U-235	#B	-5.1380E-01	-1.4952E+00	-1.4953E+00	0.101E+00

- All peaks for activity calculation had bad shape.
* - Activity omitted from total
& - Activity omitted from total and all peaks had bad shape.
< - MDA value printed.
A - Activity printed, but activity < MDA.
B - Activity < MDA and failed test.
C - Area < Critical level.
F - Failed fraction or key line test.
H - Halflife limit exceeded

---------- S U M M A R Y ----------

Total Activity (41.1 to 2612.4 keV) 2.3840204E+01 pCi/g

Laboratory: New World Technology

ORTEC g v - i (3263) wan32 G53W2.06 29-FEB-2008 12:39:32
New World Technology Spectrum name: 6N000228.An1

Sample description
Parcel B 6PBFS-055-110DUP 367g
2/28/08 11:03

Acquisition information
Start time: 29-Feb-2008 11:49:12
Live time: 2700
Real time: 2706

- -

***** S U M M A R Y O F N U C L I D E S I N S A M P L E *****

Nuclide		Time of Count Activity pCi/g	Uncertainty Counting pCi/g	2 Sigma Total pCi/g	MDA pCi/g
Ac-228	F	1.4384E+00	2.6542E-01	2.7075E-01	0.205E+00
AM-241	A	9.4765E-02	1.5465E-01	1.5469E-01	0.127E+00
Bi-212	B	3.2901E-01	4.5285E-01	4.5301E-01	0.400E+00
BI-214	F	9.9892E-01	2.2498E-01	2.2803E-01	0.922E-01
CO-60	#B	7.1655E-03	1.7040E-02	1.7042E-02	0.174E-01
CS-137	B	1.7174E-02	5.4070E-02	5.4074E-02	0.431E-01
EU-152	#B	8.9682E-02	7.3415E-02	7.3491E-02	0.103E+00
EU-154	F	2.8834E-01	1.4322E-01	1.4362E-01	0.630E-01
K-40		1.2018E+01	1.6642E+00	1.7231E+00	0.753E+00
Pa-234	B	-7.6280E-02	2.9615E+02	2.9615E+02	0.128E+00
Pb-210		2.7904E+00	1.3522E+00	1.3562E+00	0.106E+01
Pb-212		1.5271E+00	1.6232E-01	1.7195E-01	0.914E-01
PB-214		1.0236E+00	1.4910E-01	1.5387E-01	0.979E-01
RA-226		3.0005E+00	1.4404E+00	1.4448E+00	0.112E+01
Th-230	#B	-2.5902E+01	-8.6951E+01	-8.6957E+01	0.105E+02
Th-234	B	1.5975E-01	1.2718E+00	1.2718E+00	0.111E+01
Tl-208	F	3.0369E-01	9.0983E-02	9.1680E-02	0.654E-01
U-235	#B	-4.7192E-01	-1.4643E+00	-1.4644E+00	0.107E+00

- All peaks for activity calculation had bad shape.
* - Activity omitted from total
& - Activity omitted from total and all peaks had bad shape.
< - MDA value printed.
A - Activity printed, but activity < MDA.
B - Activity < MDA and failed test.
C - Area < Critical level.
F - Failed fraction or key line test.
H - Halflife limit exceeded

---------- S U M M A R Y ----------

Total Activity (41.1 to 2612.4 keV) 2.3100990E+01 pCi/g

Laboratory: New World Technology

ORTEC g v - i (3263) wan32 G53W2.06 29-FEB-2008 13:23:47
New World Technology Spectrum name: 4N000218.An1

Sample description
Parcel B 6PBFS-055-111 395g
2/28/08 13:20

Acquisition information
Start time: 29-Feb-2008 09:35:16
Live time: 2700
Real time: 2705

- -

***** S U M M A R Y O F N U C L I D E S I N S A M P L E *****

Nuclide		Time of Count Activity pCi/g	Uncertainty 2 Sigma Counting pCi/g	Total pCi/g	MDA pCi/g
Ac-228	F	2.2376E+00	3.5937E-01	3.6881E-01	0.117E+00
AM-241	#A	-2.3917E-02	-3.2952E-01	-3.2952E-01	0.152E+00
Bi-212		1.0666E+00	5.0534E-01	5.0689E-01	0.448E+00
BI-214		1.7224E+00	2.4397E-01	2.5218E-01	0.869E-01
CO-60	#B	7.1416E-03	2.0476E-02	2.0478E-02	0.169E-01
CS-137	B	9.2511E-04	6.1214E-02	6.1214E-02	0.504E-01
EU-152	B	7.6218E-02	1.2680E-01	1.2683E-01	0.117E+00
EU-154	F	9.7955E-02	1.9278E-01	1.9282E-01	0.857E-01
K-40		1.0523E+01	1.5639E+00	1.6117E+00	0.726E+00
Pa-234	F	1.5238E-01	1.6816E-01	1.6825E-01	0.146E+00
Pb-210		3.0173E+00	1.9236E+00	1.9269E+00	0.122E+01
Pb-212		1.8770E+00	1.7955E-01	1.9255E-01	0.977E-01
PB-214		1.5650E+00	2.6242E-01	2.6875E-01	0.116E+00
RA-226		2.4361E+00	1.6414E+00	1.6439E+00	0.135E+01
Th-230	#B	-5.6126E+00	-3.4220E+01	-3.4221E+01	0.130E+02
Th-234		3.1057E+00	1.1258E+00	1.1317E+00	0.124E+01
Tl-208	F	7.2249E-01	9.2402E-02	9.6201E-02	0.367E-01
U-235	#B	-8.1712E-01	-1.1657E+00	-1.1661E+00	0.123E+00

- All peaks for activity calculation had bad shape.
* - Activity omitted from total
& - Activity omitted from total and all peaks had bad shape.
< - MDA value printed.
A - Activity printed, but activity < MDA.
B - Activity < MDA and failed test.
C - Area < Critical level.
F - Failed fraction or key line test.
H - Halflife limit exceeded

---------- S U M M A R Y ----------

Total Activity (42.7 to 3401.5 keV) 2.8272892E+01 pCi/g

Laboratory: New World Technology

ORTEC g v - i (3263) wan32 G53W2.06 29-FEB-2008 13:29:26
New World Technology Spectrum name: 4N000220.An1

Sample description
Parcel B 6PBFS-055-111DUP 395g
2/28/08 13:20

Acquisition information
Start time: 29-Feb-2008 11:41:24
Live time: 2700
Real time: 2706

- -

***** S U M M A R Y O F N U C L I D E S I N S A M P L E *****

Nuclide		Time of Count Activity pCi/g	Uncertainty Counting pCi/g	2 Sigma Total pCi/g	MDA pCi/g
Ac-228	F	2.1154E+00	3.5515E-01	3.6370E-01	0.117E+00
AM-241	#A	-4.4103E-02	-4.6507E-01	-4.6507E-01	0.120E+00
Bi-212		1.0377E+00	4.8748E-01	4.8900E-01	0.416E+00
BI-214		1.3670E+00	2.2688E-01	2.3246E-01	0.963E-01
CO-60	#B	4.5580E-03	1.2409E-02	1.2410E-02	0.212E-01
CS-137	B	4.7140E-03	4.5420E-02	4.5420E-02	0.370E-01
EU-152	B	1.1600E-01	9.7377E-02	9.7472E-02	0.118E+00
EU-154	B	2.7333E-02	6.7817E-02	6.7825E-02	0.914E-01
K-40		1.1249E+01	1.5151E+00	1.5714E+00	0.688E+00
Pa-234	B	3.2010E-02	5.6580E-02	5.6593E-02	0.114E+00
Pb-210	#	2.1444E+00	1.7984E+00	1.8001E+00	0.119E+01
Pb-212	F	1.6642E+00	1.7466E-01	1.8522E-01	0.993E-01
PB-214		1.3109E+00	1.9884E-01	2.0468E-01	0.118E+00
RA-226		2.3913E+00	1.5650E+00	1.5675E+00	0.126E+01
Th-230	#B	-1.2145E+01	-1.2152E+02	-1.2152E+02	0.101E+02
Th-234		3.0674E+00	1.2339E+00	1.2391E+00	0.112E+01
Tl-208	F	6.2982E-01	8.7212E-02	9.0280E-02	0.367E-01
U-235	#B	-8.4601E-01	-1.4822E+00	-1.4825E+00	0.124E+00

- All peaks for activity calculation had bad shape.
* - Activity omitted from total
& - Activity omitted from total and all peaks had bad shape.
< - MDA value printed.
A - Activity printed, but activity < MDA.
B - Activity < MDA and failed test.
C - Area < Critical level.
F - Failed fraction or key line test.
H - Halflife limit exceeded

---------- S U M M A R Y ----------

Total Activity (42.7 to 3401.5 keV) 2.6976948E+01 pCi/g

Laboratory: New World Technology

ORTEC g v - i (3263) wan32 G53W2.06 08-MAR-2008 14:52:10
New World Technology Spectrum name: An13F9.An1

Sample description
Parcel B 6PBFS-055-113 362g
2/28/08 13:40

Acquisition information
Start time: 07-Mar-2008 17:55:45
Live time: 2700
Real time: 2703

- -

***** S U M M A R Y O F N U C L I D E S I N S A M P L E *****

Nuclide		Time of Count Activity pCi/g	Uncertainty Counting pCi/g	2 Sigma Total pCi/g	MDA pCi/g
Ac-228		1.4132E+00	3.5132E-01	3.5522E-01	0.196E+00
AM-241	#B	-5.8076E-02	-3.3707E-01	-3.3707E-01	0.137E+00
Bi-212	F	6.4464E-01	5.4007E-01	5.4060E-01	0.393E+00
BI-214	#F	1.5352E+00	2.6147E-01	2.6761E-01	0.928E-01
CO-60	#B	9.7701E-03	2.1906E-02	2.1909E-02	0.170E-01
CS-137	B	1.5073E-02	6.1263E-02	6.1266E-02	0.491E-01
EU-152	F	3.5220E-01	2.1024E-01	2.1064E-01	0.885E-01
EU-154	#F	1.5559E-01	1.0303E-01	1.0319E-01	0.628E-01
K-40		1.2210E+01	1.6213E+00	1.6836E+00	0.634E+00
Pa-234	F	1.7773E-01	1.3554E-01	1.3570E-01	0.123E+00
Pb-210		3.0999E+00	1.3002E+00	1.3052E+00	0.979E+00
Pb-212		1.4168E+00	1.7049E-01	1.7843E-01	0.102E+00
PB-214		1.2491E+00	2.1644E-01	2.2136E-01	0.106E+00
RA-226		1.7952E+00	1.4436E+00	1.4452E+00	0.119E+01
Th-230	B	3.0116E+00	1.7524E+01	1.7524E+01	0.120E+02
Th-234	F	1.4955E+00	7.0778E-01	7.0994E-01	0.114E+01
Tl-208	F	1.6868E-01	4.1155E-02	4.1629E-02	0.135E+00
U-235	#B	-9.0513E-01	-3.1364E+00	-3.1366E+00	0.124E+00

- All peaks for activity calculation had bad shape.
* - Activity omitted from total
& - Activity omitted from total and all peaks had bad shape.
< - MDA value printed.
A - Activity printed, but activity < MDA.
B - Activity < MDA and failed test.
C - Area < Critical level.
F - Failed fraction or key line test.
H - Halflife limit exceeded

---------- S U M M A R Y ----------

Total Activity (41.2 to 2632.4 keV) 2.3364002E+01 pCi/g

Laboratory: New World Technology

ORTEC g v - i (3263) wan32 G53W2.06 08-MAR-2008 14:47:49
New World Technology Spectrum name: An1400.An1

Sample description
Parcel B 6PBFS-055-113DUP 362g
2/28/08 13:40

Acquisition information
Start time: 07-Mar-2008 20:16:25
Live time: 2700
Real time: 2703

- -

***** S U M M A R Y O F N U C L I D E S I N S A M P L E *****

Nuclide		Time of Count Activity pCi/g	Uncertainty Counting pCi/g	2 Sigma Total pCi/g	MDA pCi/g
Ac-228		1.0212E+00	3.0430E-01	3.0666E-01	0.191E+00
AM-241	#B	-8.4968E-02	-5.7983E-01	-5.7984E-01	0.154E+00
Bi-212	#F	1.3141E+00	5.5709E-01	5.5923E-01	0.249E+00
BI-214	F	1.6771E+00	2.6680E-01	2.7398E-01	0.856E-01
CO-60	#B	1.0751E-03	4.2108E-03	4.2110E-03	0.102E-01
CS-137	B	2.8630E-02	5.1193E-02	5.1204E-02	0.390E-01
EU-152	F	2.7259E-01	1.4486E-01	1.4521E-01	0.103E+00
EU-154	F	8.2086E-02	9.0423E-02	9.0474E-02	0.697E-01
K-40		1.1637E+01	1.5872E+00	1.6450E+00	0.634E+00
Pa-234	F	1.7387E-01	1.4936E-01	1.4950E-01	0.121E+00
Pb-210	#	2.0648E+00	1.5972E+00	1.5990E+00	0.105E+01
Pb-212		1.4566E+00	1.7921E-01	1.8720E-01	0.111E+00
PB-214		1.2796E+00	2.3046E-01	2.3531E-01	0.104E+00
RA-226		1.7970E+00	1.3246E+00	1.3263E+00	0.103E+01
Th-230	#B	-7.1668E+00	-2.6022E+01	-2.6024E+01	0.952E+01
Th-234	F	1.8925E+00	7.2875E-01	7.3210E-01	0.116E+01
Tl-208	#F	3.2061E-01	6.9861E-02	7.0869E-02	0.125E+00
U-235	#B	-9.2712E-01	-4.7665E+00	-4.7666E+00	0.120E+00

- All peaks for activity calculation had bad shape.
* - Activity omitted from total
& - Activity omitted from total and all peaks had bad shape.
< - MDA value printed.
A - Activity printed, but activity < MDA.
B - Activity < MDA and failed test.
C - Area < Critical level.
F - Failed fraction or key line test.
H - Halflife limit exceeded

---------- S U M M A R Y ----------

Total Activity (41.2 to 2632.4 keV) 2.2247017E+01 pCi/g

Laboratory: New World Technology

ORTEC g v - i (3263) wan32 G53W2.06 08-MAR-2008 15:30:20
New World Technology Spectrum name: An11C6.An1

Sample description
Parcel B 6PBFS-055-116 366g
2/28/08 14:11

Acquisition information
Start time: 07-Mar-2008 16:07:57
Live time: 2700
Real time: 2704

- -

***** S U M M A R Y O F N U C L I D E S I N S A M P L E *****

Nuclide		Time of Count Activity pCi/g	Uncertainty Counting pCi/g	2 Sigma Total pCi/g	MDA pCi/g
Ac-228	F	9.8018E-01	3.0737E-01	3.0951E-01	0.217E+00
AM-241	#A	-5.9612E-02	-6.3662E-01	-6.3663E-01	0.134E+00
Bi-212	F	6.0741E-01	5.2205E-01	5.2254E-01	0.384E+00
BI-214	F	1.1713E+00	2.3671E-01	2.4066E-01	0.869E-01
CO-60	#B	-4.9483E-02	-1.1443E-01	-1.1445E-01	0.512E-01
CS-137	B	3.2557E-02	4.5763E-02	4.5779E-02	0.345E-01
EU-152	B	-1.4294E-02	-2.6612E-01	-2.6612E-01	0.810E-01
EU-154	F	1.4316E-01	1.1392E-01	1.1405E-01	0.729E-01
K-40	#	1.2393E+01	2.0741E+00	2.1245E+00	0.108E+01
Pa-234	#B	1.1309E-01	2.0104E-01	2.0108E-01	0.115E+00
Pb-210	#	3.0864E+00	1.8003E+00	1.8039E+00	0.112E+01
Pb-212	F	8.9676E-01	1.2763E-01	1.3189E-01	0.798E-01
PB-214		7.9022E-01	1.4412E-01	1.4707E-01	0.101E+00
RA-226		1.8107E+00	1.3353E+00	1.3370E+00	0.111E+01
Th-230	#B	-1.9444E+01	-5.4870E+01	-5.4875E+01	0.110E+02
Th-234	F	1.0548E+00	9.6518E-01	9.6597E-01	0.103E+01
Tl-208	#F	3.0581E-01	1.1845E-01	1.1899E-01	0.581E-01
U-235	B	-4.4010E-01	-8.6018E-01	-8.6034E-01	0.102E+00

- All peaks for activity calculation had bad shape.
* - Activity omitted from total
& - Activity omitted from total and all peaks had bad shape.
< - MDA value printed.
A - Activity printed, but activity < MDA.
B - Activity < MDA and failed test.
C - Area < Critical level.
F - Failed fraction or key line test.
H - Halflife limit exceeded

---------- S U M M A R Y ----------

Total Activity (41.1 to 2612.4 keV) 2.2042217E+01 pCi/g

Laboratory: New World Technology

ORTEC g v - i (3263) wan32 G53W2.06 07-MAR-2008 18:37:15
New World Technology Spectrum name: An11C9.An1

Sample description
Parcel B 6PBFS-055-116DUP 366g
2/28/08 14:11

Acquisition information
Start time: 07-Mar-2008 17:51:59
Live time: 2700
Real time: 2704

- -

***** S U M M A R Y O F N U C L I D E S I N S A M P L E *****

Nuclide		Time of Count Activity pCi/g	Uncertainty Counting pCi/g	2 Sigma Total pCi/g	MDA pCi/g
Ac-228	F	9.2370E-01	2.7388E-01	2.7602E-01	0.216E+00
AM-241	A	1.1832E-01	1.4640E-01	1.4646E-01	0.120E+00
Bi-212	F	6.0144E-01	3.8038E-01	3.8104E-01	0.344E+00
BI-214	F	1.1333E+00	2.0602E-01	2.1027E-01	0.754E-01
CO-60	#B	-1.0494E-01	-4.5938E-01	-4.5939E-01	0.480E-01
CS-137	F	3.7937E-02	4.8692E-02	4.8712E-02	0.366E-01
EU-152	#B	-8.5992E-03	-2.2985E-01	-2.2985E-01	0.107E+00
EU-154	F	1.2166E-01	1.1272E-01	1.1281E-01	0.795E-01
K-40		1.2706E+01	1.8757E+00	1.9340E+00	0.826E+00
Pa-234	F	1.6337E-01	1.7074E-01	1.7084E-01	0.119E+00
Pb-210		1.7353E+00	1.3604E+00	1.3619E+00	0.110E+01
Pb-212	F	9.2072E-01	1.2727E-01	1.3178E-01	0.784E-01
PB-214		9.4928E-01	1.5812E-01	1.6200E-01	0.878E-01
RA-226		1.8125E+00	1.2151E+00	1.2169E+00	0.979E+00
Th-230	#B	-1.7091E+01	-3.7413E+01	-3.7419E+01	0.110E+02
Th-234	B	8.7907E-01	1.1228E+00	1.1233E+00	0.978E+00
Tl-208	F	3.2862E-01	8.8430E-02	8.9267E-02	0.478E-01
U-235	#B	-3.9978E-01	-4.9894E-01	-4.9916E-01	0.986E-01

- All peaks for activity calculation had bad shape.
* - Activity omitted from total
& - Activity omitted from total and all peaks had bad shape.
< - MDA value printed.
A - Activity printed, but activity < MDA.
B - Activity < MDA and failed test.
C - Area < Critical level.
F - Failed fraction or key line test.
H - Halflife limit exceeded

---------- S U M M A R Y ----------

Total Activity (41.1 to 2612.4 keV) 2.0509447E+01 pCi/g

Laboratory: New World Technology

ORTEC g v - i (3263) wan32 G53W2.06 29-FEB-2008 14:21:59
New World Technology Spectrum name: 4N000219.An1

Sample description
Parcel D 70-PDB-B000163G4-01 392g
2/28/08 14:10

Acquisition information
Start time: 29-Feb-2008 10:41:01
Live time: 2700
Real time: 2705

- -

***** S U M M A R Y O F N U C L I D E S I N S A M P L E *****

Nuclide		Time of Count Activity pCi/g	Uncertainty 2 Sigma Counting pCi/g	Total pCi/g	MDA pCi/g
Ac-228	F	1.3064E+00	3.3236E-01	3.3587E-01	0.138E+00
AM-241	A	7.2968E-02	1.3748E-01	1.3751E-01	0.114E+00
Bi-212		9.1031E-01	4.7984E-01	4.8103E-01	0.419E+00
BI-214		9.3233E-01	1.8282E-01	1.8606E-01	0.806E-01
CO-60	#F	2.3430E-02	1.8777E-02	1.8797E-02	0.143E-01
CS-137	B	1.1715E-02	4.1263E-02	4.1265E-02	0.327E-01
EU-152	F	1.9359E-01	1.4193E-01	1.4211E-01	0.985E-01
EU-154	#F	1.1317E-01	1.0181E-01	1.0189E-01	0.781E-01
K-40		1.0138E+01	1.4411E+00	1.4893E+00	0.675E+00
Pa-234	B	7.5790E-02	1.5504E-01	1.5507E-01	0.141E+00
Pb-210		1.5651E+00	1.3054E+00	1.3066E+00	0.106E+01
Pb-212		1.1156E+00	1.5154E-01	1.5708E-01	0.926E-01
PB-214		9.1749E-01	1.9597E-01	1.9889E-01	0.940E-01
RA-226		2.0989E+00	1.4244E+00	1.4265E+00	0.116E+01
Th-230	B	3.7051E+00	1.3437E+01	1.3438E+01	0.114E+02
Th-234		2.5234E+00	1.0330E+00	1.0372E+00	0.108E+01
Tl-208	F	4.9933E-01	1.2006E-01	1.2147E-01	0.370E-01
U-235	#B	-9.0320E-01	-2.3564E+00	-2.3567E+00	0.121E+00

- All peaks for activity calculation had bad shape.
* - Activity omitted from total
& - Activity omitted from total and all peaks had bad shape.
< - MDA value printed.
A - Activity printed, but activity < MDA.
B - Activity < MDA and failed test.
C - Area < Critical level.
F - Failed fraction or key line test.
H - Halflife limit exceeded

---------- S U M M A R Y ----------

Total Activity (42.7 to 3401.5 keV) 2.2006790E+01 pCi/g

Laboratory: New World Technology

ORTEC g v - i (3263) wan32 G53W2.06 29-FEB-2008 14:15:21
New World Technology Spectrum name: 4N000221.An1

Sample description
Parcel D 70-PDB-B000163G4-01DUP 392g
2/28/08 14:10

Acquisition information
Start time: 29-Feb-2008 13:11:51
Live time: 2700
Real time: 2705

- -

***** S U M M A R Y O F N U C L I D E S I N S A M P L E *****

Nuclide		Time of Count Activity pCi/g	Uncertainty Counting pCi/g	2 Sigma Total pCi/g	MDA pCi/g
Ac-228	F	1.4316E+00	3.5269E-01	3.5666E-01	0.137E+00
AM-241	A	3.1427E-02	1.5580E-01	1.5580E-01	0.130E+00
Bi-212	F	6.5333E-01	4.1670E-01	4.1741E-01	0.394E+00
BI-214		9.9877E-01	2.0447E-01	2.0780E-01	0.913E-01
CO-60	#B	2.8961E-03	4.8063E-03	4.8075E-03	0.941E-02
CS-137	B	2.0684E-02	5.5823E-02	5.5829E-02	0.443E-01
EU-152	F	1.3824E-01	9.2160E-02	9.2302E-02	0.108E+00
EU-154	F	1.1793E-01	7.9982E-02	8.0100E-02	0.725E-01
K-40		1.0838E+01	1.5092E+00	1.5617E+00	0.784E+00
Pa-234	B	-1.3624E-01	3.3767E+02	3.3767E+02	0.146E+00
Pb-210		2.4442E+00	1.7057E+00	1.7081E+00	0.111E+01
Pb-212		1.2990E+00	1.6244E-01	1.6942E-01	0.917E-01
PB-214		1.0996E+00	2.2424E-01	2.2791E-01	0.113E+00
RA-226		2.0149E+00	1.4521E+00	1.4540E+00	0.116E+01
Th-230	#B	-1.3958E+01	-3.8746E+02	-3.8746E+02	0.946E+01
Th-234	F	2.2196E+00	1.3097E+00	1.3123E+00	0.107E+01
Tl-208	F	6.5369E-01	1.3623E-01	1.3836E-01	0.370E-01
U-235	#B	-8.7999E-01	-1.7398E+00	-1.7401E+00	0.120E+00

- All peaks for activity calculation had bad shape.
* - Activity omitted from total
& - Activity omitted from total and all peaks had bad shape.
< - MDA value printed.
A - Activity printed, but activity < MDA.
B - Activity < MDA and failed test.
C - Area < Critical level.
F - Failed fraction or key line test.
H - Halflife limit exceeded

---------- S U M M A R Y ----------

Total Activity (42.7 to 3401.5 keV) 2.3652508E+01 pCi/g

Laboratory: New World Technology

ORTEC g v - i (3263) wan32 G53W2.06 08-MAR-2008 15:20:36
New World Technology Spectrum name: An11C0.An1

Sample description
Parcel D 70-PDB-B000377G4-01 331g
2/20/08 12:45

Acquisition information
Start time: 07-Mar-2008 12:48:38
Live time: 2700
Real time: 2704

- -

***** S U M M A R Y O F N U C L I D E S I N S A M P L E *****

Nuclide		Time of Count Activity pCi/g	Uncertainty Counting pCi/g	2 Sigma Total pCi/g	MDA pCi/g
Ac-228	F	9.4516E-01	2.5081E-01	2.5325E-01	0.252E+00
AM-241	#A	-3.3025E-03	-1.3699E-01	-1.3699E-01	0.111E+00
Bi-212	#F	7.0348E-01	5.1175E-01	5.1241E-01	0.352E+00
BI-214	F	8.9572E-01	1.8496E-01	1.8792E-01	0.752E-01
CO-60	#B	-1.2122E-01	-8.4697E-01	-8.4698E-01	0.543E-01
CS-137	B	6.2301E-04	3.5699E-02	3.5699E-02	0.294E-01
EU-152	F	8.0755E-02	6.6891E-02	6.6958E-02	0.614E-01
EU-154	#B	-4.7996E-02	1.9799E+02	1.9799E+02	0.655E-01
K-40		1.0861E+01	1.8315E+00	1.8753E+00	0.108E+01
Pa-234	B	7.4179E-02	1.2888E-01	1.2891E-01	0.138E+00
Pb-210		4.5964E+00	1.9275E+00	1.9351E+00	0.117E+01
Pb-212	F	1.1646E+00	1.4795E-01	1.5413E-01	0.887E-01
PB-214		8.0145E-01	1.6528E-01	1.6793E-01	0.100E+00
RA-226		1.7790E+00	1.3757E+00	1.3773E+00	0.110E+01
Th-230	#B	-2.5504E+01	-6.0281E+01	-6.0289E+01	0.102E+02
Th-234	B	8.0056E-01	1.0581E+00	1.0586E+00	0.110E+01
Tl-208	F	2.8794E-01	8.3215E-02	8.3898E-02	0.587E-01
U-235	B	-5.3906E-01	-1.3766E+00	-1.3767E+00	0.108E+00

- All peaks for activity calculation had bad shape.
* - Activity omitted from total
& - Activity omitted from total and all peaks had bad shape.
< - MDA value printed.
A - Activity printed, but activity < MDA.
B - Activity < MDA and failed test.
C - Area < Critical level.
F - Failed fraction or key line test.
H - Halflife limit exceeded

---------- S U M M A R Y ----------

Total Activity (41.1 to 2612.4 keV) 2.2034649E+01 pCi/g

Laboratory: New World Technology

ORTEC g v - i (3263) wan32 G53W2.06 08-MAR-2008 15:25:16
New World Technology Spectrum name: An11C4.An1

Sample description
Parcel D 70-PDB-B000377G4-01DUP 331g
2/20/08 12:45

Acquisition information
Start time: 07-Mar-2008 15:14:37
Live time: 2700
Real time: 2704

- -

***** S U M M A R Y O F N U C L I D E S I N S A M P L E *****

Nuclide		Time of Count Activity pCi/g	Uncertainty Counting pCi/g	2 Sigma Total pCi/g	MDA pCi/g
Ac-228	F	6.3541E-01	3.2229E-01	3.2315E-01	0.266E+00
AM-241	#A	-1.0892E-01	3.5746E+02	3.5746E+02	0.154E+00
Bi-212	F	4.2797E-01	4.8872E-01	4.8897E-01	0.419E+00
BI-214	F	1.0823E+00	1.8209E-01	1.8646E-01	0.927E-01
CO-60	#B	-9.7901E-02	-4.1640E-01	-4.1641E-01	0.575E-01
CS-137	B	1.8738E-02	3.2608E-02	3.2615E-02	0.241E-01
EU-152	#F	1.3447E-01	1.0505E-01	1.0517E-01	0.114E+00
EU-154	#B	6.3527E-02	4.4478E-02	4.4540E-02	0.885E-01
K-40	#	1.2197E+01	1.9903E+00	2.0411E+00	0.111E+01
Pa-234	#F	1.9629E-01	2.3911E-01	2.3922E-01	0.146E+00
Pb-210		3.5391E+00	1.9234E+00	1.9278E+00	0.119E+01
Pb-212		1.0487E+00	1.5290E-01	1.5778E-01	0.986E-01
PB-214		9.9771E-01	1.6910E-01	1.7310E-01	0.100E+00
RA-226		1.7727E+00	1.5467E+00	1.5481E+00	0.131E+01
Th-230	#B	-2.7278E+01	-8.5870E+01	-8.5876E+01	0.116E+02
Th-234	B	2.0297E-01	1.3284E+00	1.3284E+00	0.115E+01
Tl-208	F	3.7865E-01	8.6981E-02	8.8108E-02	0.570E-01
U-235	#B	-5.1457E-01	-1.1167E+00	-1.1169E+00	0.112E+00

- All peaks for activity calculation had bad shape.
* - Activity omitted from total
& - Activity omitted from total and all peaks had bad shape.
< - MDA value printed.
A - Activity printed, but activity < MDA.
B - Activity < MDA and failed test.
C - Area < Critical level.
F - Failed fraction or key line test.
H - Halflife limit exceeded

---------- S U M M A R Y ----------

Total Activity (41.1 to 2612.4 keV) 2.1651861E+01 pCi/g

Laboratory: New World Technology

ORTEC g v - i (3263) wan32 G53W2.06 11-MAR-2008 09:13:52
New World Technology Spectrum name: An13ED.An1

Sample description
Parcel D 70-PDB-B025997G3-01 362g
2/26/08 11:00

Acquisition information
Start time: 07-Mar-2008 13:59:49
Live time: 2700
Real time: 2704

- -

***** S U M M A R Y O F N U C L I D E S I N S A M P L E *****

Nuclide		Activity pCi/g	Time of Count Uncertainty Counting pCi/g	2 Sigma Total pCi/g	MDA pCi/g
Ac-228	F	1.2547E+00	2.6537E-01	2.6941E-01	0.981E-01
AM-241	#A	-5.4583E-02	-6.8155E-01	-6.8156E-01	0.142E+00
Bi-212	F	1.0968E+00	4.8080E-01	4.8252E-01	0.420E+00
BI-214		8.8733E-01	1.9255E-01	1.9534E-01	0.840E-01
CO-60	B	4.9415E-03	1.6667E-02	1.6668E-02	0.391E-01
CS-137	B	2.3101E-02	5.5585E-02	5.5592E-02	0.437E-01
EU-152	F	1.4360E-01	1.4224E-01	1.4234E-01	0.828E-01
EU-154	#F	1.2254E-01	1.3559E-01	1.3566E-01	0.652E-01
K-40		1.0612E+01	1.4794E+00	1.5308E+00	0.700E+00
Pa-234	F	2.2980E-01	1.3597E-01	1.3623E-01	0.135E+00
Pb-210		1.8246E+00	1.5776E+00	1.5790E+00	0.110E+01
Pb-212	F	1.1331E+00	1.5991E-01	1.6533E-01	0.912E-01
PB-214		8.4444E-01	1.6496E-01	1.6790E-01	0.948E-01
RA-226		3.2721E+00	1.3872E+00	1.3925E+00	0.101E+01
Th-230	#B	-1.4871E+01	-3.2116E+02	-3.2116E+02	0.102E+02
Th-234		2.1302E+00	1.0496E+00	1.0526E+00	0.111E+01
Tl-208	F	3.8295E-01	7.9113E-02	8.0375E-02	0.401E-01
U-235	#B	-1.0282E+00	-7.2732E+00	-7.2733E+00	0.130E+00

- All peaks for activity calculation had bad shape.
* - Activity omitted from total
& - Activity omitted from total and all peaks had bad shape.
< - MDA value printed.
A - Activity printed, but activity < MDA.
B - Activity < MDA and failed test.
C - Area < Critical level.
F - Failed fraction or key line test.
H - Halflife limit exceeded

---------- S U M M A R Y ----------

Total Activity (42.7 to 3401.5 keV) 2.3438217E+01 pCi/g

Laboratory: New World Technology

ORTEC g v - i (3263) wan32 G53W2.06 11-MAR-2008 09:11:49
New World Technology Spectrum name: An13F3.An1

Sample description
Parcel D 70-PDB-B025997G3-01DUP 362g
2/26/08 11:00

Acquisition information
Start time: 07-Mar-2008 17:09:48
Live time: 2700
Real time: 2704

- -

***** S U M M A R Y O F N U C L I D E S I N S A M P L E *****

Nuclide		Time of Count Activity pCi/g	Uncertainty Counting pCi/g	2 Sigma Total pCi/g	MDA pCi/g
Ac-228	F	1.1086E+00	2.6353E-01	2.6671E-01	0.991E-01
AM-241	A	7.0786E-03	1.6140E-01	1.6140E-01	0.136E+00
Bi-212	F	9.7578E-01	4.9064E-01	4.9197E-01	0.425E+00
BI-214		1.1396E+00	1.9954E-01	2.0396E-01	0.784E-01
CO-60	#B	-4.3083E-02	-2.8857E-01	-2.8858E-01	0.331E-01
CS-137	B	1.6087E-02	4.4967E-02	4.4971E-02	0.353E-01
EU-152	#B	-9.6749E-03	3.8343E+02	3.8343E+02	0.112E+00
EU-154	F	1.8876E-01	1.3097E-01	1.3116E-01	0.810E-01
K-40		9.8970E+00	1.4793E+00	1.5241E+00	0.725E+00
Pa-234	F	3.2923E-01	2.6975E-01	2.7002E-01	0.147E+00
Pb-210		1.8999E+00	1.6225E+00	1.6241E+00	0.113E+01
Pb-212	F	1.0894E+00	1.4920E-01	1.5456E-01	0.877E-01
PB-214		9.3665E-01	2.3038E-01	2.3298E-01	0.108E+00
RA-226		3.1046E+00	1.4419E+00	1.4465E+00	0.107E+01
Th-230	#B	-1.2274E+01	-8.6441E+01	-8.6442E+01	0.102E+02
Th-234		3.1107E+00	1.2594E+00	1.2647E+00	0.111E+01
Tl-208	F	5.3344E-01	1.2919E-01	1.3069E-01	0.401E-01
U-235	#B	-9.6940E-01	-2.0938E+00	-2.0942E+00	0.127E+00

- All peaks for activity calculation had bad shape.
* - Activity omitted from total
& - Activity omitted from total and all peaks had bad shape.
< - MDA value printed.
A - Activity printed, but activity < MDA.
B - Activity < MDA and failed test.
C - Area < Critical level.
F - Failed fraction or key line test.
H - Halflife limit exceeded

---------- S U M M A R Y ----------

Total Activity (42.7 to 3401.5 keV) 2.3795698E+01 pCi/g

Laboratory: New World Technology

ORTEC g v - i (3263) wan32 G53W2.06 08-MAR-2008 15:40:57
New World Technology Spectrum name: An112A.An1

Sample description
Parcel D 70-PDB-G001226G3-01 331g
2/20/08 14:00

Acquisition information
Start time: 07-Mar-2008 11:45:36
Live time: 2700
Real time: 2702

- -

***** S U M M A R Y O F N U C L I D E S I N S A M P L E *****

Nuclide		Time of Count Activity pCi/g	Uncertainty Counting pCi/g	2 Sigma Total pCi/g	MDA pCi/g
AC-228		1.2862E+00	3.3405E-01	3.3744E-01	0.122E+00
AM-241	#B	-7.2245E-02	-3.8487E+00	-3.8487E+00	0.105E+00
BI-212	F	8.3553E-01	4.4406E-01	4.4514E-01	0.322E+00
BI-214	F	1.0059E+00	1.8437E-01	1.8810E-01	0.636E-01
CO-60	#F	1.6589E-01	5.4209E-02	5.4556E-02	0.102E-01
CS-137	B	1.7605E-02	5.2271E-02	5.2275E-02	0.413E-01
EU-152	B	9.3388E-02	4.9888E-02	5.0008E-02	0.117E+00
EU-154	F	2.5837E-01	1.2074E-01	1.2112E-01	0.677E-01
K-40		1.1034E+01	1.5752E+00	1.6274E+00	0.652E+00
PA-234	F	3.0115E-01	1.3468E-01	1.3514E-01	0.123E+00
PB-210		2.3687E+00	1.4847E+00	1.4873E+00	0.118E+01
PB-212	F	1.3094E+00	1.5685E-01	1.6419E-01	0.852E-01
PB-214		5.9902E-01	1.6407E-01	1.6556E-01	0.988E-01
RA-226		1.7833E+00	1.2213E+00	1.2231E+00	0.961E+00
Th-230	#B	-4.7393E+00	-2.2927E+01	-2.2927E+01	0.114E+02
TH-234	#B	-2.6035E-01	-1.8620E+00	-1.8620E+00	0.115E+01
TL-208	#F	7.3664E-01	1.6565E-01	1.6788E-01	0.363E-01
U-235	#B	-9.1408E-01	-3.7698E+00	-3.7700E+00	0.120E+00

- All peaks for activity calculation had bad shape.
* - Activity omitted from total
& - Activity omitted from total and all peaks had bad shape.
< - MDA value printed.
A - Activity printed, but activity < MDA.
B - Activity < MDA and failed test.
C - Area < Critical level.
F - Failed fraction or key line test.
H - Halflife limit exceeded

---------- S U M M A R Y ----------

Total Activity (41.9 to 2667.7 keV) 2.1124662E+01 pCi/g

Laboratory: New World Technology

ORTEC g v - i (3263) wan32 G53W2.06 08-MAR-2008 15:37:01
New World Technology Spectrum name: An1139.An1

Sample description
Parcel D 70-PDB-G001226G3-01DUP 331g
2/20/08 14:00

Acquisition information
Start time: 07-Mar-2008 13:51:03
Live time: 2700
Real time: 2702

- -

***** S U M M A R Y O F N U C L I D E S I N S A M P L E *****

Nuclide	Time of Count Activity pCi/g	Uncertainty Counting pCi/g	2 Sigma Total pCi/g	MDA pCi/g
AC-228	1.6704E+00	3.3453E-01	3.4022E-01	0.103E+00
AM-241 #B	8.3580E-02	1.7617E-01	1.7619E-01	0.124E+00
BI-212	7.9132E-01	4.5972E-01	4.6065E-01	0.343E+00
BI-214 F	1.1667E+00	1.9452E-01	1.9927E-01	0.677E-01
CO-60 #B	1.4510E-03	1.6551E-02	1.6551E-02	0.221E-01
CS-137	4.4604E-02	3.6891E-02	3.6928E-02	0.232E-01
EU-152 #B	-1.7689E-01	2.6181E+02	2.6181E+02	0.955E-01
EU-154 #F	1.7339E-01	8.1736E-02	8.1988E-02	0.526E-01
K-40	1.0788E+01	1.5598E+00	1.6102E+00	0.652E+00
PA-234 #F	2.2328E-01	1.7881E-01	1.7900E-01	0.988E-01
PB-210	2.3669E+00	1.4055E+00	1.4082E+00	0.111E+01
PB-212 F	1.2105E+00	1.4553E-01	1.5229E-01	0.814E-01
PB-214	7.6274E-01	2.0514E-01	2.0708E-01	0.113E+00
RA-226	1.7453E+00	1.2565E+00	1.2581E+00	0.982E+00
Th-230 #B	-5.7445E+00	-2.3716E+01	-2.3717E+01	0.110E+02
TH-234 #B	-1.2869E+00	-3.0470E+00	-3.0474E+00	0.102E+01
TL-208 F	5.7886E-01	1.4807E-01	1.4962E-01	0.363E-01
U-235 #B	-8.8729E-01	-1.9734E+00	-1.9736E+00	0.115E+00

- All peaks for activity calculation had bad shape.
* - Activity omitted from total
& - Activity omitted from total and all peaks had bad shape.
< - MDA value printed.
A - Activity printed, but activity < MDA.
B - Activity < MDA and failed test.
C - Area < Critical level.
F - Failed fraction or key line test.
H - Halflife limit exceeded

---------- S U M M A R Y ----------

Total Activity (41.9 to 2667.7 keV) 2.1125792E+01 pCi/g

Laboratory: New World Technology

ORTEC g v - i (3263) wan32 G53W2.06 08-MAR-2008 14:05:11
New World Technology Spectrum name: An13F5.An1

Sample description
Parcel D 70-PD-C0048-13 366g
2/22/08 08:25

Acquisition information
Start time: 07-Mar-2008 18:03:34
Live time: 2700
Real time: 2704

- -

***** S U M M A R Y O F N U C L I D E S I N S A M P L E *****

Nuclide		Time of Count Activity pCi/g	Uncertainty Counting pCi/g	2 Sigma Total pCi/g	MDA pCi/g
Ac-228	F	8.7367E-01	2.7453E-01	2.7643E-01	0.118E+00
AM-241	A	4.8905E-02	1.3086E-01	1.3087E-01	0.109E+00
Bi-212	B	2.8465E-01	2.0332E-01	2.0360E-01	0.404E+00
BI-214		6.9709E-01	2.0988E-01	2.1146E-01	0.957E-01
CO-60	#B	-3.4834E-02	-3.6521E-02	-3.6544E-02	0.492E-01
CS-137	B	1.8076E-02	3.9866E-02	3.9871E-02	0.305E-01
EU-152	#F	1.4752E-01	1.1205E-01	1.1218E-01	0.834E-01
EU-154	B	-5.3213E-02	1.7143E+02	1.7143E+02	0.649E-01
K-40		1.0070E+01	1.4382E+00	1.4859E+00	0.692E+00
Pa-234	B	8.7175E-02	1.1335E-01	1.1340E-01	0.120E+00
Pb-210		2.3200E+00	1.3400E+00	1.3428E+00	0.106E+01
Pb-212	F	6.0530E-01	1.4366E-01	1.4540E-01	0.927E-01
PB-214	F	6.2010E-01	1.9661E-01	1.9795E-01	0.108E+00
RA-226		1.9197E+00	1.3396E+00	1.3415E+00	0.105E+01
Th-230	#B	-1.5693E+01	-5.1134E+03	-5.1134E+03	0.106E+02
Th-234		2.0609E+00	9.9535E-01	9.9826E-01	0.108E+01
Tl-208	F	2.8239E-01	9.6585E-02	9.7151E-02	0.396E-01
U-235	#B	-9.4558E-01	-1.7204E+00	-1.7208E+00	0.124E+00

- All peaks for activity calculation had bad shape.
* - Activity omitted from total
& - Activity omitted from total and all peaks had bad shape.
< - MDA value printed.
A - Activity printed, but activity < MDA.
B - Activity < MDA and failed test.
C - Area < Critical level.
F - Failed fraction or key line test.
H - Halflife limit exceeded

---------- S U M M A R Y ----------

Total Activity (42.7 to 3401.5 keV) 1.9449150E+01 pCi/g

Laboratory: New World Technology

ORTEC g v - i (3263) wan32 G53W2.06 08-MAR-2008 14:02:26
New World Technology Spectrum name: An13FC.An1

Sample description
Parcel D 70-PD-C0048-13DUP 366g
2/22/08 08:25

Acquisition information
Start time: 07-Mar-2008 20:31:06
Live time: 2700
Real time: 2703

- -

***** S U M M A R Y O F N U C L I D E S I N S A M P L E *****

Nuclide		Time of Count Activity pCi/g	Uncertainty 2 Sigma Counting pCi/g	Total pCi/g	MDA pCi/g
Ac-228	F	1.0728E+00	3.2815E-01	3.3055E-01	0.122E+00
AM-241	#A	-8.8927E-02	3.0069E+02	3.0069E+02	0.130E+00
Bi-212	B	1.5502E-01	1.0430E-01	1.0446E-01	0.402E+00
BI-214		5.9682E-01	1.3824E-01	1.3999E-01	0.650E-01
CO-60	#B	-5.8676E-02	-1.4998E-01	-1.4999E-01	0.524E-01
CS-137	B	1.5562E-02	4.4694E-02	4.4697E-02	0.350E-01
EU-152	F	1.2935E-01	1.0812E-01	1.0823E-01	0.107E+00
EU-154	F	8.5487E-02	1.0365E-01	1.0370E-01	0.805E-01
K-40		1.0283E+01	1.4508E+00	1.5000E+00	0.692E+00
Pa-234	B	5.6656E-02	1.0200E-01	1.0203E-01	0.139E+00
Pb-210	F	1.3084E+00	1.3220E+00	1.3228E+00	0.108E+01
Pb-212	F	5.9084E-01	1.3259E-01	1.3438E-01	0.921E-01
PB-214		6.5034E-01	1.5420E-01	1.5607E-01	0.765E-01
RA-226		1.9066E+00	1.4229E+00	1.4246E+00	0.111E+01
Th-230	#B	-9.6075E+00	-5.6093E+01	-5.6094E+01	0.119E+02
Th-234	F	1.5340E+00	1.0254E+00	1.0269E+00	0.107E+01
Tl-208	F	3.1197E-01	1.0063E-01	1.0130E-01	0.396E-01
U-235	B	-8.5391E-01	-8.4317E-01	-8.4376E-01	0.121E+00

- All peaks for activity calculation had bad shape.
* - Activity omitted from total
& - Activity omitted from total and all peaks had bad shape.
< - MDA value printed.
A - Activity printed, but activity < MDA.
B - Activity < MDA and failed test.
C - Area < Critical level.
F - Failed fraction or key line test.
H - Halflife limit exceeded

---------- S U M M A R Y ----------

Total Activity (42.7 to 3401.5 keV) 1.6946295E+01 pCi/g

Laboratory: New World Technology

ORTEC g v - i (3263) wan32 G53W2.06 08-MAR-2008 14:21:31
New World Technology Spectrum name: An13FA.An1

Sample description
Parcel D 70-PD-C0048-26 351g
2/22/08 08:35

Acquisition information
Start time: 07-Mar-2008 18:58:58
Live time: 5400
Real time: 5408

- -

***** S U M M A R Y O F N U C L I D E S I N S A M P L E *****

Nuclide		Time of Count Activity pCi/g	Uncertainty Counting pCi/g	2 Sigma Total pCi/g	MDA pCi/g
Ac-228	F	1.2208E+00	1.9723E-01	2.0235E-01	0.884E-01
AM-241	#A	-5.2764E-02	-3.8072E-01	-3.8072E-01	0.898E-01
Bi-212	B	2.1612E-01	3.8003E-01	3.8012E-01	0.330E+00
BI-214		1.1277E+00	1.9781E-01	2.0217E-01	0.832E-01
CO-60	#B	-9.4834E-02	-3.5104E-01	-3.5106E-01	0.390E-01
CS-137	B	3.8702E-03	4.3517E-02	4.3517E-02	0.357E-01
EU-152	F	1.2919E-01	1.1190E-01	1.1200E-01	0.830E-01
EU-154	#B	2.9914E-02	4.5527E-02	4.5540E-02	0.609E-01
K-40		9.9362E+00	1.1643E+00	1.2212E+00	0.575E+00
Pa-234	B	9.7427E-02	1.0841E-01	1.0847E-01	0.101E+00
Pb-210	#	2.1535E+00	1.2649E+00	1.2674E+00	0.854E+00
Pb-212	F	1.1338E+00	1.1293E-01	1.2049E-01	0.688E-01
PB-214		1.0046E+00	1.3067E-01	1.3587E-01	0.717E-01
RA-226		2.0808E+00	1.1151E+00	1.1178E+00	0.901E+00
Th-230	#B	-1.6025E+01	-6.8199E+02	-6.8199E+02	0.790E+01
Th-234		2.1249E+00	8.1805E-01	8.2181E-01	0.842E+00
Tl-208	F	5.7992E-01	9.7207E-02	9.9553E-02	0.292E-01
U-235	#B	-9.9349E-01	-1.5031E+00	-1.5036E+00	0.940E-01

- All peaks for activity calculation had bad shape.
* - Activity omitted from total
& - Activity omitted from total and all peaks had bad shape.
< - MDA value printed.
A - Activity printed, but activity < MDA.
B - Activity < MDA and failed test.
C - Area < Critical level.
F - Failed fraction or key line test.
H - Halflife limit exceeded

---------- S U M M A R Y ----------

Total Activity (42.7 to 3401.5 keV) 2.1362257E+01 pCi/g

Laboratory: New World Technology

ORTEC g v - i (3263) wan32 G53W2.06 07-MAR-2008 22:52:17
New World Technology Spectrum name: An13FE.An1

Sample description
Parcel D 70-PD-C0048-26DUP 351g
2/22/08 08:35

Acquisition information
Start time: 07-Mar-2008 21:19:03
Live time: 5400
Real time: 5407

- -

***** S U M M A R Y O F N U C L I D E S I N S A M P L E *****

Nuclide		Time of Count Activity pCi/g	Uncertainty 2 Sigma Counting pCi/g	Total pCi/g	MDA pCi/g
Ac-228	F	1.5226E+00	3.1862E-01	3.2357E-01	0.128E+00
AM-241	#A	-2.4746E-02	-2.1106E-01	-2.1107E-01	0.103E+00
Bi-212	F	4.6163E-01	2.9876E-01	2.9925E-01	0.313E+00
BI-214		9.6355E-01	1.7914E-01	1.8267E-01	0.812E-01
CO-60	#B	-4.3247E-02	-9.9913E-02	-9.9925E-02	0.366E-01
CS-137		6.1175E-02	4.2465E-02	4.2526E-02	0.309E-01
EU-152	B	4.3921E-02	5.5400E-02	5.5423E-02	0.597E-01
EU-154	B	3.1791E-02	4.1788E-02	4.1804E-02	0.461E-01
K-40		1.0607E+01	1.1462E+00	1.2117E+00	0.553E+00
Pa-234	B	3.8760E-02	7.9336E-02	7.9348E-02	0.114E+00
Pb-210		1.6460E+00	1.2803E+00	1.2818E+00	0.872E+00
Pb-212		1.1806E+00	1.1663E-01	1.2456E-01	0.706E-01
PB-214		1.0067E+00	1.2675E-01	1.3212E-01	0.689E-01
RA-226		2.0449E+00	1.0842E+00	1.0868E+00	0.882E+00
Th-230	#B	-6.7375E+00	-2.2379E+01	-2.2380E+01	0.822E+01
Th-234		2.4432E+00	9.0544E-01	9.0993E-01	0.846E+00
Tl-208	F	4.7521E-01	8.8051E-02	8.9794E-02	0.292E-01
U-235	B	-1.0350E+00	-2.7984E+00	-2.7987E+00	0.953E-01

- All peaks for activity calculation had bad shape.
* - Activity omitted from total
& - Activity omitted from total and all peaks had bad shape.
< - MDA value printed.
A - Activity printed, but activity < MDA.
B - Activity < MDA and failed test.
C - Area < Critical level.
F - Failed fraction or key line test.
H - Halflife limit exceeded

---------- S U M M A R Y ----------

Total Activity (42.7 to 3401.5 keV) 2.2412436E+01 pCi/g

Laboratory: New World Technology

ORTEC g v - i (3263) wan32 G53W2.06 07-MAR-2008 10:48:18
New World Technology Spectrum name: An1398.An1

Sample description
Parcel D 70-PD-C0076-10 358g
2/19/08 13:45

Acquisition information
Start time: 05-Mar-2008 08:28:47
Live time: 2700
Real time: 2702

- -

***** S U M M A R Y O F N U C L I D E S I N S A M P L E *****

Nuclide		Time of Count Activity pCi/g	Uncertainty Counting pCi/g	2 Sigma Total pCi/g	MDA pCi/g
Ac-228		9.2428E-01	1.9131E-01	1.9437E-01	0.850E-01
AM-241	#B	-2.8499E-02	-1.9578E-01	-1.9579E-01	0.758E-01
Bi-212	F	6.8801E-01	3.5308E-01	3.5401E-01	0.216E+00
BI-214	F	8.4121E-01	1.6820E-01	1.7107E-01	0.552E-01
CO-60	#B	5.5502E-04	3.7102E-03	3.7103E-03	0.995E-02
CS-137	B	3.3543E-03	4.0582E-02	4.0582E-02	0.414E-01
EU-152	F	1.4428E-01	7.4504E-02	7.4696E-02	0.819E-01
EU-154	F	1.5030E-01	1.2271E-01	1.2284E-01	0.593E-01
K-40		8.8027E+00	1.3584E+00	1.3971E+00	0.509E+00
Pa-234	#F	2.2294E-01	1.0922E-01	1.0953E-01	0.699E-01
Pb-210		1.2322E+00	8.6073E-01	8.6195E-01	0.684E+00
Pb-212	F	7.5055E-01	1.1674E-01	1.2002E-01	0.623E-01
Pb-214		7.7322E-01	1.9745E-01	1.9952E-01	0.872E-01
RA-226		1.6657E+00	1.0813E+00	1.0830E+00	0.819E+00
Th-230	B	5.0550E+00	8.5923E+00	8.5943E+00	0.697E+01
Th-234	F	1.0649E+00	8.1265E-01	8.1361E-01	0.725E+00
Tl-208	F	2.4783E-01	9.0750E-02	9.1215E-02	0.472E-01
U-235	#B	-5.7623E-02	-8.8825E-02	-8.8850E-02	0.619E-01

- All peaks for activity calculation had bad shape.
* - Activity omitted from total
& - Activity omitted from total and all peaks had bad shape.
< - MDA value printed.
A - Activity printed, but activity < MDA.
B - Activity < MDA and failed test.
C - Area < Critical level.
F - Failed fraction or key line test.
H - Halflife limit exceeded

---------- S U M M A R Y ----------

Total Activity (40.2 to 2567.0 keV) 1.5925756E+01 pCi/g

Laboratory: New World Technology

ORTEC g v - i (3263) wan32 G53W2.06 07-MAR-2008 10:46:21
New World Technology Spectrum name: An139C.An1

Sample description
Parcel D 70-PD-C0076-10DUP 358g
2/19/08 13:45

Acquisition information
Start time: 05-Mar-2008 10:26:39
Live time: 2700
Real time: 2702

- -

***** S U M M A R Y O F N U C L I D E S I N S A M P L E *****

Nuclide		Time of Count Activity pCi/g	Uncertainty Counting pCi/g	2 Sigma Total pCi/g	MDA pCi/g
Ac-228		9.9790E-01	2.3657E-01	2.3945E-01	0.108E+00
AM-241	B	1.1516E-01	1.7183E-01	1.7188E-01	0.140E+00
Bi-212	F	5.5448E-01	3.1267E-01	3.1334E-01	0.193E+00
BI-214	F	7.2098E-01	1.4639E-01	1.4882E-01	0.517E-01
CO-60	#F	2.4464E-02	2.0916E-02	2.0935E-02	0.995E-02
CS-137	#B	-5.4853E-02	-3.3999E-01	-3.3999E-01	0.489E-01
EU-152	F	8.3665E-02	6.8519E-02	6.8589E-02	0.763E-01
EU-154	F	9.7499E-02	7.8169E-02	7.8253E-02	0.643E-01
K-40		8.1450E+00	1.3121E+00	1.3465E+00	0.509E+00
Pa-234	F	1.9723E-01	1.0857E-01	1.0882E-01	0.907E-01
Pb-210		1.2327E+00	9.2810E-01	9.2923E-01	0.741E+00
Pb-212		7.3101E-01	1.1702E-01	1.2013E-01	0.651E-01
Pb-214		7.3095E-01	1.4737E-01	1.4985E-01	0.822E-01
RA-226		1.7442E+00	9.9363E-01	9.9574E-01	0.736E+00
Th-230	#B	1.2865E+00	6.0760E+00	6.0762E+00	0.523E+01
Th-234	B	3.9723E-02	9.6484E-02	9.6495E-02	0.799E+00
Tl-208	F	2.9710E-01	8.2564E-02	8.3297E-02	0.385E-01
U-235	B	-9.9886E-02	-3.5185E-01	-3.5187E-01	0.646E-01

- All peaks for activity calculation had bad shape.
* - Activity omitted from total
& - Activity omitted from total and all peaks had bad shape.
< - MDA value printed.
A - Activity printed, but activity < MDA.
B - Activity < MDA and failed test.
C - Area < Critical level.
F - Failed fraction or key line test.
H - Halflife limit exceeded

---------- S U M M A R Y ----------

Total Activity (40.2 to 2567.0 keV) 1.5178783E+01 pCi/g

Laboratory: New World Technology

ORTEC g v - i (3263) wan32 G53W2.06 08-MAR-2008 13:40:58
New World Technology Spectrum name: An13CB.An1

Sample description
Parcel D 70-PD-C0080-42 349g
2/21/08 14:14

Acquisition information
Start time: 07-Mar-2008 14:10:53
Live time: 2700
Real time: 2704

- -

***** S U M M A R Y O F N U C L I D E S I N S A M P L E *****

Nuclide		Time of Count Activity pCi/g	Uncertainty Counting pCi/g	2 Sigma Total pCi/g	MDA pCi/g
Ac-228		1.5123E+00	3.4878E-01	3.5327E-01	0.127E+00
AM-241	#B	-5.9424E-02	5.0291E+02	5.0291E+02	0.125E+00
Bi-212		1.3837E+00	7.0957E-01	7.1142E-01	0.362E+00
BI-214	F	1.2406E+00	2.1797E-01	2.2278E-01	0.629E-01
CO-60	#F	2.6730E-02	2.5891E-02	2.5910E-02	0.157E-01
CS-137		6.3711E-02	4.2372E-02	4.2438E-02	0.251E-01
EU-152	#B	-1.6092E-02	1.8439E+02	1.8439E+02	0.698E-01
EU-154	#B	0.0000E+00	9.0980E+01	9.0980E+01	0.285E-01
K-40		6.0845E+00	1.1899E+00	1.2111E+00	0.493E+00
Pa-234	F	9.7713E-02	6.7876E-02	6.7973E-02	0.762E-01
Pb-210		1.2493E+00	1.0302E+00	1.0312E+00	0.802E+00
Pb-212		1.5356E+00	1.7767E-01	1.8658E-01	0.102E+00
PB-214	F	9.2136E-01	2.2540E-01	2.2798E-01	0.117E+00
RA-226		2.6874E+00	1.2779E+00	1.2818E+00	0.929E+00
Th-230	#B	-1.6375E+02	-2.5917E+02	-2.5924E+02	0.194E+02
Th-234	B	-6.3358E+00	-6.5980E+00	-6.6022E+00	0.167E+01
Tl-208		5.2708E-01	8.7908E-02	9.0057E-02	0.210E-01
U-235	F	8.2681E-02	9.4605E-02	9.4655E-02	0.670E-01

- All peaks for activity calculation had bad shape.
* - Activity omitted from total
& - Activity omitted from total and all peaks had bad shape.
< - MDA value printed.
A - Activity printed, but activity < MDA.
B - Activity < MDA and failed test.
C - Area < Critical level.
F - Failed fraction or key line test.
H - Halflife limit exceeded

---------- S U M M A R Y ----------

Total Activity (42.5 to 2705.0 keV) 1.7232302E+01 pCi/g

Laboratory: New World Technology

ORTEC g v - i (3263) wan32 G53W2.06 11-MAR-2008 08:46:52
New World Technology Spectrum name: An13CF.An1

Sample description
Parcel D 70-PD-C0080-42DUP 349g
2/21/08 14:14

Acquisition information
Start time: 07-Mar-2008 16:36:01
Live time: 2700
Real time: 2704

- -

***** S U M M A R Y O F N U C L I D E S I N S A M P L E *****

Nuclide		Time of Count Activity pCi/g	Uncertainty Counting pCi/g	2 Sigma Total pCi/g	MDA pCi/g
Ac-228		1.7621E+00	2.6585E-01	2.7377E-01	0.651E-01
AM-241	B	2.9592E-02	1.3964E-01	1.3965E-01	0.116E+00
Bi-212	F	9.4406E-01	4.2474E-01	4.2619E-01	0.276E+00
BI-214	F	1.1719E+00	1.8847E-01	1.9342E-01	0.710E-01
CO-60	#B	6.0548E-03	1.0588E-02	1.0591E-02	0.157E-01
CS-137		9.0499E-02	5.9787E-02	5.9881E-02	0.399E-01
EU-152	F	1.1469E-01	4.3351E-02	4.3559E-02	0.675E-01
EU-154	F	2.4868E-01	9.3544E-02	9.3998E-02	0.496E-01
K-40		5.6067E+00	1.1724E+00	1.1907E+00	0.564E+00
Pa-234	#F	2.5904E-01	1.3670E-01	1.3704E-01	0.605E-01
Pb-210	#B	-6.6832E+00	-1.5844E+01	-1.5846E+01	0.142E+01
Pb-212		1.6534E+00	1.7597E-01	1.8636E-01	0.971E-01
PB-214		1.4755E+00	1.7681E-01	1.8509E-01	0.687E-01
RA-226		2.2369E+00	1.1607E+00	1.1637E+00	0.843E+00
Th-230	#B	-1.1468E+02	-1.7197E+02	-1.7202E+02	0.150E+02
Th-234	B	6.1086E-01	8.8910E-01	8.8939E-01	0.871E+00
Tl-208	F	5.9056E-01	7.9704E-02	8.2661E-02	0.210E-01
U-235	F	1.2508E-01	8.0737E-02	8.0870E-02	0.571E-01

- All peaks for activity calculation had bad shape.
* - Activity omitted from total
& - Activity omitted from total and all peaks had bad shape.
< - MDA value printed.
A - Activity printed, but activity < MDA.
B - Activity < MDA and failed test.
C - Area < Critical level.
F - Failed fraction or key line test.
H - Halflife limit exceeded

---------- S U M M A R Y ----------

Total Activity (42.5 to 2705.0 keV) 1.6279131E+01 pCi/g

Laboratory: New World Technology

ORTEC g v - i (3263) wan32 G53W2.06 11-MAR-2008 09:27:10
New World Technology Spectrum name: An13D3.An1

Sample description
Parcel D 70-PD-C0081-05 363g
2/22/08 13:55

Acquisition information
Start time: 07-Mar-2008 13:49:01
Live time: 5400
Real time: 5403

- -

***** S U M M A R Y O F N U C L I D E S I N S A M P L E *****

Nuclide	Time of Count Activity pCi/g	Uncertainty 2 Sigma Counting pCi/g	Total pCi/g	MDA pCi/g
Ac-228	1.1727E+00	1.7638E-01	1.8167E-01	0.593E-01
AM-241 #B	-4.9854E-03	-8.1779E-02	-8.1779E-02	0.615E-01
Bi-212 F	8.9502E-01	2.9231E-01	2.9419E-01	0.179E+00
BI-214 F	6.9437E-01	1.1167E-01	1.1461E-01	0.534E-01
CO-60 #F	6.8025E-03	6.1035E-03	6.1087E-03	0.491E-02
CS-137 #B	-1.8548E-02	-4.6036E-02	-4.6041E-02	0.295E-01
EU-152 F	6.7821E-02	3.4434E-02	3.4526E-02	0.546E-01
EU-154 F	8.5736E-02	4.4249E-02	4.4363E-02	0.378E-01
K-40	4.6564E+00	7.3987E-01	7.5980E-01	0.397E+00
Pa-234 F	3.2719E-01	1.0188E-01	1.0260E-01	0.661E-01
Pb-210 #	2.6980E+00	1.3302E+00	1.3340E+00	0.510E+00
Pb-212	1.1303E+00	9.2109E-02	1.0122E-01	0.420E-01
Pb-214	2.4268E-01	1.1979E-01	1.2012E-01	0.934E-01
RA-226	1.6686E+00	7.3270E-01	7.3532E-01	0.560E+00
Th-230 #F	9.6324E+00	1.1695E+01	1.1701E+01	0.491E+01
Th-234 #	3.0141E+00	1.1414E+00	1.1469E+00	0.491E+00
Tl-208	4.8327E-01	5.5041E-02	5.7891E-02	0.194E-01
U-235 B	-1.0226E-01	-2.4210E-01	-2.4213E-01	0.427E-01

- All peaks for activity calculation had bad shape.
* - Activity omitted from total
& - Activity omitted from total and all peaks had bad shape.
< - MDA value printed.
A - Activity printed, but activity < MDA.
B - Activity < MDA and failed test.
C - Area < Critical level.
F - Failed fraction or key line test.
H - Halflife limit exceeded

---------- S U M M A R Y ----------

Total Activity (40.2 to 2567.0 keV) 1.7050602E+01 pCi/g

Laboratory: New World Technology

ORTEC g v - i (3263) wan32 G53W2.06 11-MAR-2008 09:23:45
New World Technology Spectrum name: An13DB.An1

Sample description
Parcel D 70-PD-C0081-05DUP 363g
2/22/08 13:55

Acquisition information
Start time: 07-Mar-2008 17:59:46
Live time: 5400
Real time: 5404

- -

***** S U M M A R Y O F N U C L I D E S I N S A M P L E *****

Nuclide		Activity pCi/g	Uncertainty Counting pCi/g	2 Sigma Total pCi/g	MDA pCi/g
Ac-228		1.0845E+00	1.4496E-01	1.5045E-01	0.593E-01
AM-241	#B	-2.0907E-02	-1.3308E-01	-1.3309E-01	0.638E-01
Bi-212	F	1.0005E+00	2.7667E-01	2.7915E-01	0.150E+00
BI-214	F	1.0270E+00	1.0785E-01	1.1439E-01	0.211E-01
CO-60	#F	8.6961E-03	6.6540E-03	6.6618E-03	0.491E-02
CS-137	#B	-2.0582E-02	-5.7217E-02	-5.7223E-02	0.325E-01
EU-152	F	7.3044E-02	4.2195E-02	4.2282E-02	0.552E-01
EU-154	F	9.0280E-02	6.0142E-02	6.0236E-02	0.361E-01
K-40		5.5599E+00	7.9444E-01	8.2081E-01	0.397E+00
Pa-234	F	1.1059E-01	7.3770E-02	7.3884E-02	0.624E-01
Pb-210		1.1351E+00	6.4279E-01	6.4417E-01	0.519E+00
Pb-212		1.0920E+00	9.2147E-02	1.0067E-01	0.437E-01
Pb-214		6.6567E-01	1.0353E-01	1.0644E-01	0.614E-01
RA-226		1.6830E+00	7.8569E-01	7.8817E-01	0.615E+00
Th-230	#F	1.3387E+01	1.6218E+01	1.6226E+01	0.575E+01
Th-234		1.1179E+00	6.3374E-01	6.3510E-01	0.519E+00
Tl-208	F	4.2350E-01	5.1858E-02	5.4189E-02	0.194E-01
U-235	#B	2.2621E-02	2.4769E-02	2.4784E-02	0.443E-01

- All peaks for activity calculation had bad shape.
* - Activity omitted from total
& - Activity omitted from total and all peaks had bad shape.
< - MDA value printed.
A - Activity printed, but activity < MDA.
B - Activity < MDA and failed test.
C - Area < Critical level.
F - Failed fraction or key line test.
H - Halflife limit exceeded

---------- S U M M A R Y ----------

Total Activity (40.2 to 2567.0 keV) 1.4972703E+01 pCi/g

Laboratory: New World Technology

ORTEC g v - i (3263) wan32 G53W2.06 11-MAR-2008 09:34:03
New World Technology Spectrum name: An1E2.An1

Sample description
Parcel D 70-PD-C0081-23 369g
2/22/08 14:08

Acquisition information
Start time: 06-Mar-2008 11:16:47
Live time: 2700
Real time: 2702

- -

***** S U M M A R Y O F N U C L I D E S I N S A M P L E *****

Nuclide		Time of Count Activity pCi/g	Uncertainty Counting pCi/g	2 Sigma Total pCi/g	MDA pCi/g
AC-228		8.2278E-01	1.9444E-01	1.9682E-01	0.542E-01
AM-241	F	1.2163E-01	1.8163E-01	1.8169E-01	0.793E-01
BI-212	F	5.4313E-01	3.2547E-01	3.2609E-01	0.224E+00
BI-214	F	9.4159E-01	1.3907E-01	1.4339E-01	0.271E-01
CO-60	#F	1.4722E-02	1.5787E-02	1.5797E-02	0.920E-02
CS-137	F	2.8348E-02	2.8659E-02	2.8678E-02	0.184E-01
EU-152	B	2.3131E-02	9.7732E-02	9.7735E-02	0.869E-01
EU-154	F	9.1817E-02	7.3354E-02	7.3433E-02	0.561E-01
K-40		7.9028E+00	1.2833E+00	1.3163E+00	0.587E+00
PA-234	F	2.0090E-01	7.8005E-02	7.8360E-02	0.537E-01
PB-210	#	3.4378E+00	1.9857E+00	1.9898E+00	0.787E+00
PB-212	F	8.2175E-01	1.1606E-01	1.1999E-01	0.643E-01
PB-214		6.4715E-01	1.7819E-01	1.7980E-01	0.725E-01
RA-226		1.9569E+00	9.3546E-01	9.3827E-01	0.712E+00
Th-230	#B	-4.0452E+00	-1.5949E+01	-1.5950E+01	0.965E+01
TH-234	#B	-7.2620E+00	-1.0184E+01	-1.0188E+01	0.146E+01
TL-208	#F	4.5395E-01	1.2338E-01	1.2452E-01	0.325E-01
U-235	#B	-5.3737E-01	-3.7152E-01	-3.7205E-01	0.106E+00

- All peaks for activity calculation had bad shape.
* - Activity omitted from total
& - Activity omitted from total and all peaks had bad shape.
< - MDA value printed.
A - Activity printed, but activity < MDA.
B - Activity < MDA and failed test.
C - Area < Critical level.
F - Failed fraction or key line test.
H - Halflife limit exceeded

---------- S U M M A R Y ----------

Total Activity (41.9 to 2667.7 keV) 1.7820557E+01 pCi/g

Laboratory: New World Technology

ORTEC g v - i (3263) wan32 G53W2.06 11-MAR-2008 09:30:45
New World Technology Spectrum name: An1E5.An1

Sample description
Parcel D 70-PD-C0081-23DUP 369g
2/22/08 14:08

Acquisition information
Start time: 06-Mar-2008 13:19:18
Live time: 2700
Real time: 2702

- -

***** S U M M A R Y O F N U C L I D E S I N S A M P L E *****

Nuclide		Time of Count Activity pCi/g	Uncertainty Counting pCi/g	2 Sigma Total pCi/g	MDA pCi/g
AC-228		8.6944E-01	2.2666E-01	2.2894E-01	0.891E-01
AM-241	B	3.0824E-02	1.4269E-01	1.4270E-01	0.119E+00
BI-212	F	3.3880E-01	4.0687E-01	4.0707E-01	0.321E+00
BI-214	F	9.5988E-01	1.8261E-01	1.8604E-01	0.638E-01
CO-60	#F	9.7605E-02	3.9468E-02	3.9634E-02	0.920E-02
CS-137		6.0729E-02	4.1730E-02	4.1791E-02	0.266E-01
EU-152	#B	-1.0693E-01	-5.1269E-01	-5.1270E-01	0.942E-01
EU-154	B	4.7230E-02	6.5588E-02	6.5612E-02	0.736E-01
K-40		1.0018E+01	1.4212E+00	1.4689E+00	0.587E+00
PA-234	F	2.2416E-01	1.6437E-01	1.6458E-01	0.117E+00
PB-210		1.4909E+00	1.4897E+00	1.4908E+00	0.101E+01
PB-212	F	8.2419E-01	1.2296E-01	1.2670E-01	0.701E-01
PB-214		7.6874E-01	1.6659E-01	1.6901E-01	0.881E-01
RA-226		1.9738E+00	1.1112E+00	1.1136E+00	0.830E+00
Th-230	#B	-1.3551E+01	-5.1630E+01	-5.1632E+01	0.998E+01
TH-234	#B	-3.6748E-01	-1.4371E+00	-1.4372E+00	0.984E+00
TL-208	F	1.4879E-01	6.7645E-02	6.7870E-02	0.534E-01
U-235	#B	-7.1104E-01	-1.0485E+00	-1.0488E+00	0.103E+00

- All peaks for activity calculation had bad shape.
* - Activity omitted from total
& - Activity omitted from total and all peaks had bad shape.
< - MDA value printed.
A - Activity printed, but activity < MDA.
B - Activity < MDA and failed test.
C - Area < Critical level.
F - Failed fraction or key line test.
H - Halflife limit exceeded

---------- S U M M A R Y ----------

Total Activity (41.9 to 2667.7 keV) 1.7063337E+01 pCi/g

Laboratory: New World Technology

ORTEC g v - i (3263) wan32 G53W2.06 06-MAR-2008 12:47:10
New World Technology Spectrum name: An11A9.An1

Sample description
Parcel D 70-PD-C0081-26 364g
2/22/08 14:00

Acquisition information
Start time: 06-Mar-2008 11:46:29
Live time: 2700
Real time: 2705

- -

***** S U M M A R Y O F N U C L I D E S I N S A M P L E *****

Nuclide		Time of Count Activity pCi/g	Uncertainty Counting pCi/g	2 Sigma Total pCi/g	MDA pCi/g
Ac-228	F	1.4443E+00	2.7481E-01	2.7999E-01	0.225E+00
AM-241	#A	-9.4450E-02	-6.3248E+00	-6.3248E+00	0.130E+00
Bi-212	#B	-5.8230E-01	1.8146E+03	1.8146E+03	0.452E+00
BI-214	F	9.0116E-01	1.5464E-01	1.5821E-01	0.767E-01
CO-60	#B	-5.2897E-02	-1.4346E-01	-1.4347E-01	0.537E-01
CS-137	B	5.5381E-03	3.8086E-02	3.8087E-02	0.308E-01
EU-152	B	8.7721E-02	1.1654E-01	1.1658E-01	0.111E+00
EU-154	B	1.2656E-03	9.6604E-03	9.6606E-03	0.717E-01
K-40		1.0195E+01	1.7066E+00	1.7480E+00	0.816E+00
Pa-234	#B	-1.6047E-02	-9.3590E-02	-9.3592E-02	0.614E-01
Pb-210		3.1956E+00	1.8516E+00	1.8554E+00	0.116E+01
Pb-212		1.5281E+00	1.5303E-01	1.6320E-01	0.837E-01
PB-214		1.1514E+00	1.8667E-01	1.9149E-01	0.994E-01
RA-226		2.4625E+00	1.2329E+00	1.2363E+00	0.968E+00
Th-230	#B	-3.0662E+01	-3.2749E+02	-3.2749E+02	0.104E+02
Th-234	B	3.7112E-01	1.2888E+00	1.2889E+00	0.112E+01
Tl-208	F	4.9587E-01	1.1272E-01	1.1421E-01	0.535E-01
U-235	#B	-4.8428E-01	-1.2172E+00	-1.2173E+00	0.101E+00

- All peaks for activity calculation had bad shape.
* - Activity omitted from total
& - Activity omitted from total and all peaks had bad shape.
< - MDA value printed.
A - Activity printed, but activity < MDA.
B - Activity < MDA and failed test.
C - Area < Critical level.
F - Failed fraction or key line test.
H - Halflife limit exceeded

---------- S U M M A R Y ----------

Total Activity (41.1 to 2612.4 keV) 2.1374310E+01 pCi/g

Laboratory: New World Technology

ORTEC g v - i (3263) wan32 G53W2.06 06-MAR-2008 14:45:43
New World Technology Spectrum name: An11AC.An1

Sample description
Parcel D 70-PD-C0081-26DUP 364g
2/22/08 14:00

Acquisition information
Start time: 06-Mar-2008 13:48:48
Live time: 2700
Real time: 2705

- -

***** S U M M A R Y O F N U C L I D E S I N S A M P L E *****

Nuclide		Time of Count Activity pCi/g	Uncertainty Counting pCi/g	2 Sigma Total pCi/g	MDA pCi/g
Ac-228	F	1.2234E+00	3.1552E-01	3.1877E-01	0.216E+00
AM-241	#A	-5.6493E-02	-5.9680E-01	-5.9680E-01	0.139E+00
Bi-212	F	7.6138E-01	4.9281E-01	4.9362E-01	0.400E+00
BI-214	F	9.8147E-01	1.6042E-01	1.6450E-01	0.758E-01
CO-60	#B	-9.6094E-02	-5.2085E-01	-5.2087E-01	0.513E-01
CS-137	B	1.6881E-02	4.0140E-02	4.0145E-02	0.313E-01
EU-152	#B	8.9838E-02	8.7158E-02	8.7221E-02	0.114E+00
EU-154	B	3.5507E-02	6.4676E-02	6.4689E-02	0.829E-01
K-40		1.1448E+01	1.9475E+00	1.9933E+00	0.847E+00
Pa-234	#F	2.1454E-01	2.1820E-01	2.1834E-01	0.126E+00
Pb-210	#	1.4905E+00	1.3334E+00	1.3345E+00	0.101E+01
Pb-212	F	1.4650E+00	1.5162E-01	1.6107E-01	0.845E-01
PB-214		1.0759E+00	2.0310E-01	2.0699E-01	0.958E-01
RA-226		2.7366E+00	1.3598E+00	1.3636E+00	0.107E+01
Th-230	#B	-2.1198E+01	-6.2938E+01	-6.2943E+01	0.111E+02
Th-234	F	1.4369E+00	1.1736E+00	1.1748E+00	0.107E+01
Tl-208	F	4.2597E-01	1.0306E-01	1.0426E-01	0.565E-01
U-235	B	-4.3398E-01	-8.9005E-01	-8.9020E-01	0.102E+00

- All peaks for activity calculation had bad shape.
* - Activity omitted from total
& - Activity omitted from total and all peaks had bad shape.
< - MDA value printed.
A - Activity printed, but activity < MDA.
B - Activity < MDA and failed test.
C - Area < Critical level.
F - Failed fraction or key line test.
H - Halflife limit exceeded

---------- S U M M A R Y ----------

Total Activity (41.1 to 2612.4 keV) 2.1608295E+01 pCi/g

Laboratory: New World Technology

ORTEC g v - i (3263) wan32 G53W2.06 07-MAR-2008 13:47:29
New World Technology Spectrum name: An1128.An1

Sample description
Parcel D 70-PDT-068-130 382g
2/25/08 13:40

Acquisition information
Start time: 07-Mar-2008 10:51:49
Live time: 2700
Real time: 2702

- -

***** S U M M A R Y O F N U C L I D E S I N S A M P L E *****

Nuclide		Time of Count Activity pCi/g	Uncertainty Counting pCi/g	2 Sigma Total pCi/g	MDA pCi/g
AC-228		1.6534E+00	2.7486E-01	2.8161E-01	0.149E+00
AM-241	B	7.7629E-03	1.5261E-01	1.5261E-01	0.127E+00
BI-212		8.1788E-01	4.3578E-01	4.3684E-01	0.347E+00
BI-214	F	1.1225E+00	1.8330E-01	1.8796E-01	0.916E-01
CO-60	#B	-5.0557E-02	-1.3602E-01	-1.3603E-01	0.512E-01
CS-137	B	2.3588E-02	3.6291E-02	3.6302E-02	0.268E-01
EU-152	B	-1.2000E-02	-1.5290E-02	-1.5296E-02	0.113E+00
EU-154	F	8.3227E-02	1.2018E-01	1.2022E-01	0.624E-01
K-40		9.5396E+00	1.4875E+00	1.5289E+00	0.619E+00
PA-234	F	3.8719E-01	2.0584E-01	2.0634E-01	0.116E+00
PB-210		3.3491E+00	1.5228E+00	1.5278E+00	0.994E+00
PB-212	F	1.4636E+00	1.5425E-01	1.6351E-01	0.839E-01
PB-214		1.0723E+00	1.6675E-01	1.7142E-01	0.110E+00
RA-226		2.0011E+00	1.2700E+00	1.2721E+00	0.102E+01
Th-230	#B	-1.0204E+01	-3.9046E+01	-3.9048E+01	0.101E+02
TH-234	#B	4.2107E-01	6.5333E-01	6.5352E-01	0.111E+01
TL-208	F	7.7841E-01	1.5800E-01	1.6061E-01	0.314E-01
U-235	#B	-7.4710E-01	-1.5687E+00	-1.5689E+00	0.107E+00

- All peaks for activity calculation had bad shape.
* - Activity omitted from total
& - Activity omitted from total and all peaks had bad shape.
< - MDA value printed.
A - Activity printed, but activity < MDA.
B - Activity < MDA and failed test.
C - Area < Critical level.
F - Failed fraction or key line test.
H - Halflife limit exceeded

---------- S U M M A R Y ----------

Total Activity (41.9 to 2667.7 keV) 2.2184977E+01 pCi/g

Laboratory: New World Technology

ORTEC g v - i (3263) wan32 G53W2.06 07-MAR-2008 13:43:29
New World Technology Spectrum name: An112D.An1

Sample description
Parcel D 70-PDT-068-130DUP 382g
2/25/08 13:40

Acquisition information
Start time: 07-Mar-2008 12:46:11
Live time: 2700
Real time: 2702

- -

***** S U M M A R Y O F N U C L I D E S I N S A M P L E *****

Nuclide	Time of Count Activity pCi/g	Uncertainty 2 Sigma Counting pCi/g	Total pCi/g	MDA pCi/g
AC-228	2.1048E+00	3.6525E-01	3.7350E-01	0.110E+00
AM-241 #B	-6.6636E-02	3.5682E+02	3.5682E+02	0.974E-01
BI-212 F	1.0885E+00	4.3302E-01	4.3490E-01	0.271E+00
BI-214 F	1.3628E+00	2.1558E-01	2.2142E-01	0.768E-01
CO-60 #B	-1.0237E-01	-4.4813E-01	-4.4814E-01	0.469E-01
CS-137	3.6420E-02	3.6050E-02	3.6075E-02	0.247E-01
EU-152 #B	-1.5328E-01	2.3327E+02	2.3327E+02	0.101E+00
EU-154 F	2.1785E-01	1.8953E-01	1.8971E-01	0.689E-01
K-40	1.0753E+01	1.4373E+00	1.4915E+00	0.565E+00
PA-234 #F	3.2816E-01	2.0509E-01	2.0545E-01	0.108E+00
PB-210	2.6713E+00	1.5354E+00	1.5386E+00	0.103E+01
PB-212 F	1.5001E+00	1.5041E-01	1.6036E-01	0.775E-01
PB-214	1.1207E+00	2.1810E-01	2.2202E-01	0.109E+00
RA-226	1.9356E+00	1.2574E+00	1.2595E+00	0.986E+00
Th-230 #B	-1.1394E+01	-4.6154E+01	-4.6156E+01	0.113E+02
TH-234 #B	-4.0634E-02	-7.9438E-02	-7.9452E-02	0.103E+01
TL-208 F	7.4713E-01	1.5405E-01	1.5652E-01	0.314E-01
U-235 #B	-7.6727E-01	-1.9486E+00	-1.9488E+00	0.104E+00

- All peaks for activity calculation had bad shape.
* - Activity omitted from total
& - Activity omitted from total and all peaks had bad shape.
< - MDA value printed.
A - Activity printed, but activity < MDA.
B - Activity < MDA and failed test.
C - Area < Critical level.
F - Failed fraction or key line test.
H - Halflife limit exceeded

---------- S U M M A R Y ----------

Total Activity (41.9 to 2667.7 keV) 2.3648245E+01 pCi/g

Laboratory: New World Technology

ORTEC g v - i (3263) wan32 G53W2.06 11-MAR-2008 08:59:09
New World Technology Spectrum name: An13D8.An1

Sample description
Parcel D 70-PDT-077-99 365g
2/26/08 15:33

Acquisition information
Start time: 05-Mar-2008 12:46:59
Live time: 2700
Real time: 2703

- -

***** S U M M A R Y O F N U C L I D E S I N S A M P L E *****

Nuclide		Activity pCi/g	Uncertainty Counting pCi/g	2 Sigma Total pCi/g	MDA pCi/g
Ac-228	F	6.4011E-01	2.5580E-01	2.5690E-01	0.259E+00
AM-241	#A	-8.9180E-01	-9.0133E+00	-9.0134E+00	0.772E+00
Bi-212	F	1.0583E+00	4.2339E-01	4.2521E-01	0.213E+00
BI-214	F	1.0341E+00	1.8401E-01	1.8796E-01	0.571E-01
CO-60	#F	1.4037E-02	1.3597E-02	1.3607E-02	0.101E-01
CS-137		6.7946E-02	4.7161E-02	4.7229E-02	0.296E-01
EU-152	A	7.7948E-02	1.0525E-01	1.0529E-01	0.114E+00
EU-154	A	3.9837E-02	1.0378E-01	1.0379E-01	0.819E-01
K-40		1.0073E+01	1.4435E+00	1.4910E+00	0.509E+00
Pa-234	#B	4.8704E-02	5.7374E-02	5.7403E-02	0.105E+00
Pb-210	#F	0.0000E+00	0.0000E+00	0.0000E+00	0.000E+00
Pb-212	F	8.4184E-01	1.5010E-01	1.5332E-01	0.939E-01
Pb-214		8.2658E-01	1.6267E-01	1.6553E-01	0.961E-01
RA-226		1.7100E+00	1.3130E+00	1.3145E+00	0.101E+01
Th-230	#B	-4.3501E+00	-4.1931E+01	-4.1931E+01	0.281E+02
Th-234	#B	-6.6057E+00	-2.1390E+01	-2.1391E+01	0.388E+01
Tl-208		4.5616E-01	1.2300E-01	1.2416E-01	0.190E-01
U-235	B	-1.2417E+00	-3.3140E+00	-3.3143E+00	0.142E+00

- All peaks for activity calculation had bad shape.
* - Activity omitted from total
& - Activity omitted from total and all peaks had bad shape.
< - MDA value printed.
A - Activity printed, but activity < MDA.
B - Activity < MDA and failed test.
C - Area < Critical level.
F - Failed fraction or key line test.
H - Halflife limit exceeded

---------- S U M M A R Y ----------

Total Activity (41.2 to 2630.1 keV) 1.6707666E+01 pCi/g

Laboratory: New World Technology

ORTEC g v - i (3263) wan32 G53W2.06 11-MAR-2008 09:08:36
New World Technology Spectrum name: An13DC.An1

Sample description
Parcel D 70-PDT-077-99DUP 365g
2/26/08 15:33

Acquisition information
Start time: 05-Mar-2008 14:22:07
Live time: 2700
Real time: 2704

- -

***** S U M M A R Y O F N U C L I D E S I N S A M P L E *****

Nuclide		Time of Count Activity pCi/g	Uncertainty Counting pCi/g	2 Sigma Total pCi/g	MDA pCi/g
Ac-228		1.1642E+00	2.5661E-01	2.6021E-01	0.101E+00
AM-241	#	1.0498E+00	1.7767E+00	1.7772E+00	0.924E+00
Bi-212	#B	0.0000E+00	1.9314E+03	1.9314E+03	0.379E+00
BI-214	F	9.0033E-01	1.8840E-01	1.9134E-01	0.633E-01
CO-60	#F	1.4672E-02	2.2491E-02	2.2497E-02	0.127E-01
CS-137		4.9741E-02	4.8791E-02	4.8826E-02	0.340E-01
EU-152	C	1.7146E-01	1.2298E-01	1.2314E-01	0.104E+00
EU-154	A	4.0627E-02	9.6465E-02	9.6476E-02	0.774E-01
K-40		1.0636E+01	1.4797E+00	1.5314E+00	0.509E+00
Pa-234	#B	2.0402E-02	7.0673E-02	7.0677E-02	0.101E+00
Pb-210	#F	0.0000E+00	0.0000E+00	0.0000E+00	0.000E+00
Pb-212	F	9.0676E-01	1.4718E-01	1.5097E-01	0.899E-01
Pb-214		7.5616E-01	1.6422E-01	1.6660E-01	0.942E-01
RA-226		1.7200E+00	1.0795E+00	1.0814E+00	0.787E+00
Th-230	F	5.1300E+01	6.1108E+01	6.1138E+01	0.341E+02
Th-234	#B	-5.5724E-01	-2.1028E+00	-2.1029E+00	0.435E+01
Tl-208	#F	3.7471E-01	1.1169E-01	1.1255E-01	0.190E-01
U-235	#B	-1.2688E+00	-7.0215E+00	-7.0217E+00	0.145E+00

- All peaks for activity calculation had bad shape.
* - Activity omitted from total
& - Activity omitted from total and all peaks had bad shape.
< - MDA value printed.
A - Activity printed, but activity < MDA.
B - Activity < MDA and failed test.
C - Area < Critical level.
F - Failed fraction or key line test.
H - Halflife limit exceeded

---------- S U M M A R Y ----------

Total Activity (41.2 to 2630.1 keV) 1.6508223E+01 pCi/g

Laboratory: New World Technology

ORTEC g v - i (3263) wan32 G53W2.06 10-MAR-2008 10:16:54
New World Technology Spectrum name: 2N000319.An1

Sample description
Parcel D 70-PDT-078-33 357g
3/07/08 12:57

Acquisition information
Start time: 10-Mar-2008 07:22:14
Live time: 2700
Real time: 2705

- -

***** S U M M A R Y O F N U C L I D E S I N S A M P L E *****

Nuclide		Time of Count Activity pCi/g	Uncertainty Counting pCi/g	2 Sigma Total pCi/g	MDA pCi/g
Ac-228		1.1527E+00	3.0948E-01	3.1242E-01	0.126E+00
AM-241	#B	-7.3721E-02	2.7152E+02	2.7152E+02	0.117E+00
Bi-212	F	1.1752E+00	6.8062E-01	6.8202E-01	0.323E+00
BI-214	F	8.1535E-01	1.8373E-01	1.8621E-01	0.763E-01
CO-60	#F	5.5393E-02	4.8043E-02	4.8087E-02	0.201E-01
CS-137	#B	-3.1408E-03	-5.1804E-02	-5.1804E-02	0.467E-01
EU-152	#F	6.6710E-02	6.7659E-02	6.7705E-02	0.586E-01
EU-154	#B	-4.2776E-02	1.6016E+02	1.6016E+02	0.489E-01
K-40		9.9762E+00	1.3816E+00	1.4303E+00	0.198E+00
Pa-234	F	3.1804E-01	1.3400E-01	1.3452E-01	0.906E-01
Pb-210		2.2200E+00	1.1175E+00	1.1205E+00	0.723E+00
Pb-212	F	1.1537E+00	1.3460E-01	1.4125E-01	0.632E-01
Pb-214	F	8.4897E-01	1.5097E-01	1.5423E-01	0.730E-01
RA-226		1.6896E+00	1.1262E+00	1.1280E+00	0.919E+00
Th-230	#B	-1.6888E+01	-5.2806E+01	-5.2810E+01	0.943E+01
Th-234	F	1.1171E+00	8.7034E-01	8.7133E-01	0.713E+00
Tl-208	F	4.6894E-01	8.8009E-02	8.9714E-02	0.369E-01
U-235	B	-1.2561E-01	-7.4141E-01	-7.4142E-01	0.729E-01

- All peaks for activity calculation had bad shape.
* - Activity omitted from total
& - Activity omitted from total and all peaks had bad shape.
< - MDA value printed.
A - Activity printed, but activity < MDA.
B - Activity < MDA and failed test.
C - Area < Critical level.
F - Failed fraction or key line test.
H - Halflife limit exceeded

---------- S U M M A R Y ----------

Total Activity (40.2 to 2567.0 keV) 2.0673151E+01 pCi/g

Laboratory: New World Technology

ORTEC g v - i (3263) wan32 G53W2.06 10-MAR-2008 10:10:58
New World Technology Spectrum name: 2N000321.An1

Sample description
Parcel D 70-PDT-078-33DUP 357g
3/07/08 12:57

Acquisition information
Start time: 10-Mar-2008 09:19:37
Live time: 2700
Real time: 2705

- -

***** S U M M A R Y O F N U C L I D E S I N S A M P L E *****

Nuclide		Time of Count Activity pCi/g	Uncertainty Counting pCi/g	2 Sigma Total pCi/g	MDA pCi/g
Ac-228		1.2677E+00	2.6786E-01	2.7196E-01	0.996E-01
AM-241	#B	-2.6955E-02	-2.5423E-01	-2.5423E-01	0.909E-01
Bi-212		1.2320E+00	4.4446E-01	4.4680E-01	0.231E+00
BI-214	F	9.3154E-01	1.6667E-01	1.7022E-01	0.515E-01
CO-60	#B	1.5123E-02	2.9829E-02	2.9834E-02	0.186E-01
CS-137	#B	-3.0979E-02	-1.4196E-01	-1.4197E-01	0.549E-01
EU-152	#B	-3.6817E-03	2.0324E+02	2.0324E+02	0.877E-01
EU-154	#F	1.0450E-01	5.7500E-02	5.7631E-02	0.595E-01
K-40		9.7453E+00	1.4258E+00	1.4710E+00	0.517E+00
Pa-234	F	1.1946E-01	7.2404E-02	7.2539E-02	0.982E-01
Pb-210	#	2.4258E+00	1.4080E+00	1.4109E+00	0.865E+00
Pb-212	F	1.2003E+00	1.3730E-01	1.4435E-01	0.655E-01
Pb-214		9.1075E-01	1.9243E-01	1.9537E-01	0.817E-01
RA-226		1.6419E+00	1.1074E+00	1.1091E+00	0.868E+00
Th-230	#B	-2.2924E+01	-2.6046E+02	-2.6046E+02	0.812E+01
Th-234	F	1.5437E+00	8.2312E-01	8.2512E-01	0.765E+00
Tl-208		3.2354E-01	9.2425E-02	9.3202E-02	0.453E-01
U-235	B	-9.7461E-02	-3.2349E-01	-3.2351E-01	0.643E-01

- All peaks for activity calculation had bad shape.
* - Activity omitted from total
& - Activity omitted from total and all peaks had bad shape.
< - MDA value printed.
A - Activity printed, but activity < MDA.
B - Activity < MDA and failed test.
C - Area < Critical level.
F - Failed fraction or key line test.
H - Halflife limit exceeded

---------- S U M M A R Y ----------

Total Activity (40.2 to 2567.0 keV) 2.1222536E+01 pCi/g

Laboratory: New World Technology

ORTEC g v - i (3263) wan32 G53W2.06 08-MAR-2008 14:33:11
New World Technology Spectrum name: An13F1.An1

Sample description
Parcel D 70-PDT-084-22 358g
2/22/08 10:05

Acquisition information
Start time: 07-Mar-2008 12:52:25
Live time: 2700
Real time: 2703

- -

***** S U M M A R Y O F N U C L I D E S I N S A M P L E *****

Nuclide		Time of Count Activity pCi/g	Uncertainty Counting pCi/g	2 Sigma Total pCi/g	MDA pCi/g
Ac-228		8.3382E-01	3.0809E-01	3.0965E-01	0.226E+00
AM-241	#B	-1.3176E-01	-1.2218E+00	-1.2218E+00	0.115E+00
Bi-212		9.4735E-01	5.7404E-01	5.7512E-01	0.397E+00
BI-214	F	1.3592E+00	2.7783E-01	2.8238E-01	0.100E+00
CO-60	#F	4.5791E-02	3.8399E-02	3.8437E-02	0.169E-01
CS-137	#B	3.5815E-03	1.5252E-02	1.5253E-02	0.140E-01
EU-152	F	1.1714E-01	7.1226E-02	7.1357E-02	0.818E-01
EU-154	F	1.9647E-01	1.1847E-01	1.1870E-01	0.564E-01
K-40		1.2762E+01	1.7291E+00	1.7929E+00	0.683E+00
Pa-234	F	3.1319E-01	1.7862E-01	1.7899E-01	0.121E+00
Pb-210		1.7647E+00	1.2756E+00	1.2772E+00	0.104E+01
Pb-212		1.1727E+00	1.7514E-01	1.8048E-01	0.116E+00
PB-214		1.3107E+00	2.7377E-01	2.7807E-01	0.120E+00
RA-226		1.8140E+00	1.4480E+00	1.4496E+00	0.118E+01
Th-230	#B	-4.0209E+00	-3.0217E+01	-3.0218E+01	0.127E+02
Th-234	F	1.4473E+00	7.3169E-01	7.3364E-01	0.108E+01
Tl-208		5.4212E-01	9.5192E-02	9.7299E-02	0.789E-01
U-235	#B	-8.9260E-01	-2.1737E+00	-2.1740E+00	0.125E+00

- All peaks for activity calculation had bad shape.
* - Activity omitted from total
& - Activity omitted from total and all peaks had bad shape.
< - MDA value printed.
A - Activity printed, but activity < MDA.
B - Activity < MDA and failed test.
C - Area < Critical level.
F - Failed fraction or key line test.
H - Halflife limit exceeded

---------- S U M M A R Y ----------

Total Activity (41.2 to 2632.4 keV) 2.2552048E+01 pCi/g

Laboratory: New World Technology

ORTEC g v - i (3263) wan32 G53W2.06 10-MAR-2008 08:27:41
New World Technology Spectrum name: An13F55.An1

Sample description
Parcel D 70-PDT-084-22DUP 358g
2/22/08 10:05

Acquisition information
Start time: 07-Mar-2008 15:18:52
Live time: 2700
Real time: 2703

- -

***** S U M M A R Y O F N U C L I D E S I N S A M P L E *****

Nuclide		Time of Count Activity pCi/g	Uncertainty Counting pCi/g	2 Sigma Total pCi/g	MDA pCi/g
Ac-228		1.0838E+00	3.2420E-01	3.2669E-01	0.200E+00
AM-241	#B	-8.8799E-02	-5.4583E-01	-5.4584E-01	0.139E+00
Bi-212	F	7.1772E-01	4.6265E-01	4.6342E-01	0.324E+00
BI-214	F	1.4735E+00	2.7226E-01	2.7771E-01	0.110E+00
CO-60	#F	2.8993E-02	2.6658E-02	2.6680E-02	0.201E-01
CS-137		5.7216E-02	4.8753E-02	4.8800E-02	0.329E-01
EU-152	#F	2.1542E-01	1.2361E-01	1.2386E-01	0.897E-01
EU-154	F	2.2370E-01	1.4751E-01	1.4774E-01	0.725E-01
K-40		1.3824E+01	1.6366E+00	1.7153E+00	0.113E+00
Pa-234	F	1.3087E-01	1.4124E-01	1.4132E-01	0.124E+00
Pb-210		2.7048E+00	1.3422E+00	1.3459E+00	0.104E+01
Pb-212		1.1977E+00	1.7449E-01	1.8007E-01	0.114E+00
PB-214		1.4671E+00	2.8759E-01	2.9270E-01	0.131E+00
RA-226		1.8027E+00	1.3350E+00	1.3366E+00	0.103E+01
Th-230	#B	-1.1285E+01	-6.8795E+01	-6.8796E+01	0.122E+02
Th-234	F	1.8414E+00	6.5830E-01	6.6181E-01	0.106E+01
Tl-208	B	-1.3971E-01	4.2363E+02	4.2363E+02	0.118E+00
U-235	#B	-8.6942E-01	-1.6469E+00	-1.6472E+00	0.124E+00

- All peaks for activity calculation had bad shape.
* - Activity omitted from total
& - Activity omitted from total and all peaks had bad shape.
< - MDA value printed.
A - Activity printed, but activity < MDA.
B - Activity < MDA and failed test.
C - Area < Critical level.
F - Failed fraction or key line test.
H - Halflife limit exceeded

---------- S U M M A R Y ----------

Total Activity (41.2 to 2632.4 keV) 2.4328342E+01 pCi/g

Laboratory: New World Technology

ORTEC g v - i (3263) wan32 G53W2.06 07-MAR-2008 10:40:11
New World Technology Spectrum name: An13D0.An1

Sample description
Parcel D 70-PDT-085-30 385g
2/20/08 09:46

Acquisition information
Start time: 05-Mar-2008 09:40:12
Live time: 2700
Real time: 2704

- -

***** S U M M A R Y O F N U C L I D E S I N S A M P L E *****

Nuclide		Time of Count Activity pCi/g	Uncertainty Counting pCi/g	2 Sigma Total pCi/g	MDA pCi/g
Ac-228		2.4277E+00	4.1249E-01	4.2220E-01	0.126E+00
AM-241	#A	-5.5074E-01	-3.0769E+00	-3.0770E+00	0.783E+00
Bi-212		1.8766E+00	6.4848E-01	6.5220E-01	0.376E+00
BI-214	F	1.6853E+00	2.5155E-01	2.5920E-01	0.929E-01
CO-60	#B	2.9894E-03	1.2950E-02	1.2950E-02	0.108E-01
CS-137	B	4.2142E-02	5.9865E-02	5.9886E-02	0.454E-01
EU-152	C	3.2827E-01	1.5829E-01	1.5875E-01	0.991E-01
EU-154	A	4.1263E-02	9.8837E-02	9.8848E-02	0.820E-01
K-40	#	1.0480E+01	1.5661E+00	1.6136E+00	0.593E+00
Pa-234	#B	1.2555E-01	2.2823E-01	2.2828E-01	0.169E+00
Pb-210	#F	0.0000E+00	0.0000E+00	0.0000E+00	0.000E+00
Pb-212	F	2.2505E+00	2.0831E-01	2.2441E-01	0.107E+00
Pb-214		1.8080E+00	2.8295E-01	2.9078E-01	0.118E+00
RA-226		2.8750E+00	1.5471E+00	1.5508E+00	0.124E+01
Th-230	#B	-2.5809E+01	-2.0407E+02	-2.0407E+02	0.204E+02
Th-234	B	2.8498E+00	3.3156E+00	3.3173E+00	0.519E+01
Tl-208		9.4331E-01	1.1394E-01	1.1919E-01	0.180E-01
U-235	B	-9.1610E-01	-7.4877E-01	-7.4954E-01	0.148E+00

- All peaks for activity calculation had bad shape.
* - Activity omitted from total
& - Activity omitted from total and all peaks had bad shape.
< - MDA value printed.
A - Activity printed, but activity < MDA.
B - Activity < MDA and failed test.
C - Area < Critical level.
F - Failed fraction or key line test.
H - Halflife limit exceeded

---------- S U M M A R Y ----------

Total Activity (41.2 to 2630.1 keV) 2.4346727E+01 pCi/g

Laboratory: New World Technology

ORTEC g v - i (3263) wan32 G53W2.06 05-MAR-2008 12:38:09
New World Technology Spectrum name: An13D4.An1

Sample description
Parcel D 70-PDT-085-30DUP 385g
2/20/08 09:46

Acquisition information
Start time: 05-Mar-2008 11:31:54
Live time: 2700
Real time: 2704

- -

***** S U M M A R Y O F N U C L I D E S I N S A M P L E *****

Nuclide		Time of Count Activity pCi/g	Uncertainty Counting pCi/g	2 Sigma Total pCi/g	MDA pCi/g
Ac-228	F	2.3972E+00	3.5836E-01	3.6922E-01	0.119E+00
AM-241	#A	-3.1853E-01	-1.6998E+00	-1.6998E+00	0.759E+00
Bi-212	F	1.6402E+00	5.8333E-01	5.8649E-01	0.345E+00
BI-214	F	1.8111E+00	2.4946E-01	2.5834E-01	0.855E-01
CO-60	#B	8.3129E-03	2.2325E-02	2.2327E-02	0.164E-01
CS-137	B	3.2697E-02	5.7234E-02	5.7247E-02	0.440E-01
EU-152	C	2.5270E-01	1.3156E-01	1.3189E-01	0.106E+00
EU-154	A	5.2328E-02	5.0753E-02	5.0790E-02	0.955E-01
K-40		1.1776E+01	1.5065E+00	1.5685E+00	0.482E+00
Pa-234	#F	2.8778E-01	1.6829E-01	1.6863E-01	0.120E+00
Pb-210	#F	0.0000E+00	0.0000E+00	0.0000E+00	0.000E+00
Pb-212	F	2.3718E+00	2.1250E-01	2.2999E-01	0.107E+00
Pb-214		1.7403E+00	2.8427E-01	2.9150E-01	0.117E+00
RA-226		2.8086E+00	1.6069E+00	1.6102E+00	0.126E+01
Th-230	B	-1.8959E+00	-5.6300E+01	-5.6301E+01	0.422E+02
Th-234	B	-3.1060E+00	-2.3073E+00	-2.3102E+00	0.477E+01
Tl-208		9.4768E-01	1.1041E-01	1.1587E-01	0.180E-01
U-235	#B	-1.1517E+00	-3.1385E+00	-3.1387E+00	0.148E+00

- All peaks for activity calculation had bad shape.
* - Activity omitted from total
& - Activity omitted from total and all peaks had bad shape.
< - MDA value printed.
A - Activity printed, but activity < MDA.
B - Activity < MDA and failed test.
C - Area < Critical level.
F - Failed fraction or key line test.
H - Halflife limit exceeded

---------- S U M M A R Y ----------

Total Activity (41.2 to 2630.1 keV) 2.5493275E+01 pCi/g

Laboratory: New World Technology

ORTEC g v - i (3263) wan32 G53W2.06 11-MAR-2008 08:39:50
New World Technology Spectrum name: An13D33.An1

Sample description
Parcel D 70-PDT-085-31 344g
2/20/08 09:50

Acquisition information
Start time: 07-Mar-2008 18:24:46
Live time: 2700
Real time: 2706

- -

***** S U M M A R Y O F N U C L I D E S I N S A M P L E *****

Nuclide		Time of Count Activity pCi/g	Uncertainty Counting pCi/g	2 Sigma Total pCi/g	MDA pCi/g
Ac-228		2.5046E+00	3.5021E-01	3.6233E-01	0.661E-01
AM-241		1.3891E-01	1.1879E-01	1.1890E-01	0.943E-01
Bi-212	F	1.6875E+00	5.8987E-01	5.9318E-01	0.368E+00
BI-214	F	1.8605E+00	2.0965E-01	2.2072E-01	0.138E-01
CO-60	#B	4.0686E-03	6.6519E-03	6.6537E-03	0.159E-01
CS-137		7.6007E-02	4.2484E-02	4.2577E-02	0.227E-01
EU-152	F	3.1965E-01	1.3102E-01	1.3155E-01	0.104E+00
EU-154	F	1.8047E-01	8.7800E-02	8.8055E-02	0.711E-01
K-40	#	8.2151E+00	1.3914E+00	1.4244E+00	0.572E+00
Pa-234	F	2.9576E-01	1.0778E-01	1.0833E-01	0.119E+00
Pb-210	#B	-4.7536E+00	-4.8744E+00	-4.8776E+00	0.140E+01
Pb-212		2.4847E+00	2.0555E-01	2.2528E-01	0.101E+00
PB-214		1.4542E+00	2.4288E-01	2.4880E-01	0.880E-01
RA-226		3.5989E+00	1.4807E+00	1.4867E+00	0.109E+01
Th-230	#B	-7.3365E+01	-1.2805E+02	-1.2808E+02	0.164E+02
Th-234	F	2.8935E+00	1.1446E+00	1.1496E+00	0.876E+00
Tl-208	F	6.4771E-01	1.5374E-01	1.5560E-01	0.213E-01
U-235	F	1.8386E-01	9.5134E-02	9.5378E-02	0.679E-01

- All peaks for activity calculation had bad shape.
* - Activity omitted from total
& - Activity omitted from total and all peaks had bad shape.
< - MDA value printed.
A - Activity printed, but activity < MDA.
B - Activity < MDA and failed test.
C - Area < Critical level.
F - Failed fraction or key line test.
H - Halflife limit exceeded

---------- S U M M A R Y ----------

Total Activity (42.5 to 2705.0 keV) 2.6541424E+01 pCi/g

Laboratory: New World Technology

ORTEC g v - i (3263) wan32 G53W2.06 11-MAR-2008 08:33:05
New World Technology Spectrum name: An13DA.An1

Sample description
Parcel D 70-PDT-085-31DUP 344g
2/20/08 09:50

Acquisition information
Start time: 07-Mar-2008 20:03:08
Live time: 2700
Real time: 2705

- -

***** S U M M A R Y O F N U C L I D E S I N S A M P L E *****

Nuclide		Time of Count Activity pCi/g	Uncertainty Counting pCi/g	2 Sigma Total pCi/g	MDA pCi/g
Ac-228		2.4545E+00	3.4938E-01	3.6106E-01	0.661E-01
AM-241		1.6047E-01	1.4236E-01	1.4248E-01	0.114E+00
Bi-212	F	1.6523E+00	5.3738E-01	5.4086E-01	0.313E+00
BI-214	F	1.5952E+00	1.9562E-01	2.0438E-01	0.138E-01
CO-60	#B	6.8806E-03	7.3786E-03	7.3831E-03	0.159E-01
CS-137		5.9037E-02	3.9540E-02	3.9601E-02	0.225E-01
EU-152	F	2.8532E-01	1.1451E-01	1.1500E-01	0.109E+00
EU-154	F	2.4919E-01	7.5172E-02	7.5738E-02	0.683E-01
K-40	#	1.1516E+01	1.6177E+00	1.6731E+00	0.572E+00
Pa-234	F	5.3048E-01	2.7067E-01	2.7138E-01	0.896E-01
Pb-210	#B	-3.5156E+00	-5.5945E+00	-5.5960E+00	0.133E+01
Pb-212		2.4595E+00	2.0604E-01	2.2534E-01	0.103E+00
PB-214		1.8963E+00	1.9623E-01	2.0846E-01	0.697E-01
RA-226		3.5654E+00	1.3940E+00	1.4002E+00	0.103E+01
Th-230	#B	-1.0014E+02	-1.7710E+02	-1.7714E+02	0.152E+02
Th-234	B	-9.2357E+00	-7.5400E+00	-7.5478E+00	0.146E+01
Tl-208		8.8451E-01	9.9108E-02	1.0440E-01	0.213E-01
U-235	F	1.3496E-01	9.4532E-02	9.4665E-02	0.728E-01

- All peaks for activity calculation had bad shape.
* - Activity omitted from total
& - Activity omitted from total and all peaks had bad shape.
< - MDA value printed.
A - Activity printed, but activity < MDA.
B - Activity < MDA and failed test.
C - Area < Critical level.
F - Failed fraction or key line test.
H - Halflife limit exceeded

---------- S U M M A R Y ----------

Total Activity (42.5 to 2705.0 keV) 2.7442698E+01 pCi/g

Laboratory: New World Technology

ORTEC g v - i (3263) wan32 G53W2.06 08-MAR-2008 14:41:31
New World Technology Spectrum name: An13F7.An1

Sample description
Parcel D 70-PDT-085-33 373g
2/20/08 09:58

Acquisition information
Start time: 07-Mar-2008 16:12:54
Live time: 5400
Real time: 5407

- -

***** S U M M A R Y O F N U C L I D E S I N S A M P L E *****

Nuclide		Time of Count Activity pCi/g	Uncertainty Counting pCi/g	2 Sigma Total pCi/g	MDA pCi/g
Ac-228	#	1.6679E+00	2.8867E-01	2.9525E-01	0.153E+00
AM-241	#B	-9.2825E-02	-4.7702E-01	-4.7704E-01	0.104E+00
Bi-212		1.6058E+00	4.5248E-01	4.5639E-01	0.279E+00
BI-214	F	1.7682E+00	1.8393E-01	1.9531E-01	0.657E-01
CO-60	#F	4.4058E-02	3.0780E-02	3.0824E-02	0.197E-01
CS-137	B	1.8792E-02	3.3407E-02	3.3414E-02	0.260E-01
EU-152	B	-2.9249E-02	3.7039E+02	3.7039E+02	0.799E-01
EU-154	F	1.4533E-01	1.3879E-01	1.3889E-01	0.569E-01
K-40		1.1847E+01	1.2572E+00	1.3320E+00	0.526E+00
Pa-234	F	1.0310E-01	1.0792E-01	1.0799E-01	0.954E-01
Pb-210		2.0297E+00	9.9696E-01	9.9978E-01	0.805E+00
Pb-212		2.0238E+00	1.3991E-01	1.5882E-01	0.797E-01
PB-214		1.6781E+00	1.8872E-01	1.9875E-01	0.891E-01
RA-226		2.5660E+00	1.0564E+00	1.0607E+00	0.807E+00
Th-230	#B	-9.4127E+00	-3.6906E+01	-3.6907E+01	0.787E+01
Th-234	F	2.2972E+00	5.4857E-01	5.5510E-01	0.829E+00
Tl-208	F	6.0402E-01	6.9144E-02	7.2694E-02	0.120E+00
U-235	#B	-8.7566E-01	-1.9808E+00	-1.9811E+00	0.844E-01

- All peaks for activity calculation had bad shape.
* - Activity omitted from total
& - Activity omitted from total and all peaks had bad shape.
< - MDA value printed.
A - Activity printed, but activity < MDA.
B - Activity < MDA and failed test.
C - Area < Critical level.
F - Failed fraction or key line test.
H - Halflife limit exceeded

---------- S U M M A R Y ----------

Total Activity (41.2 to 2632.4 keV) 2.5230949E+01 pCi/g

Laboratory: New World Technology

ORTEC g v - i (3263) wan32 G53W2.06 08-MAR-2008 15:17:19
New World Technology Spectrum name: An13FE5.An1

Sample description
Parcel D 70-PDT-085-33DUP 373g
2/20/08 09:58

Acquisition information
Start time: 07-Mar-2008 18:43:12
Live time: 5400
Real time: 5407

- -

***** S U M M A R Y O F N U C L I D E S I N S A M P L E *****

Nuclide		Time of Count Activity pCi/g	Uncertainty Counting pCi/g	2 Sigma Total pCi/g	MDA pCi/g
Ac-228		1.8170E+00	3.4265E-01	3.4923E-01	0.172E+00
AM-241	#B	-5.3316E-02	-2.4552E-01	-2.4553E-01	0.103E+00
Bi-212		1.6361E+00	4.2772E-01	4.3202E-01	0.261E+00
BI-214	F	1.6537E+00	2.0130E-01	2.1046E-01	0.777E-01
CO-60	#B	1.0635E-03	4.7186E-03	4.7188E-03	0.121E-01
CS-137	B	2.2523E-02	4.9440E-02	4.9447E-02	0.395E-01
EU-152	#B	-2.9249E-02	3.6125E+02	3.6125E+02	0.779E-01
EU-154	F	7.3325E-02	5.9748E-02	5.9810E-02	0.554E-01
K-40		1.2684E+01	1.2120E+00	1.3004E+00	0.470E+00
Pa-234	B	-2.0764E-02	3.4468E+02	3.4468E+02	0.744E-01
Pb-210		3.2833E+00	1.1915E+00	1.1976E+00	0.735E+00
Pb-212		1.9292E+00	1.4105E-01	1.5821E-01	0.837E-01
PB-214		1.5232E+00	1.4235E-01	1.5318E-01	0.825E-01
RA-226		2.4727E+00	1.0387E+00	1.0428E+00	0.818E+00
Th-230	#B	-9.7813E+00	-4.4296E+01	-4.4297E+01	0.841E+01
Th-234	F	2.4739E+00	6.3452E-01	6.4107E-01	0.816E+00
Tl-208		8.3806E-01	8.4299E-02	8.9864E-02	0.536E-01
U-235	B	-8.8244E-01	-2.5853E+00	-2.5855E+00	0.886E-01

- All peaks for activity calculation had bad shape.
* - Activity omitted from total
& - Activity omitted from total and all peaks had bad shape.
< - MDA value printed.
A - Activity printed, but activity < MDA.
B - Activity < MDA and failed test.
C - Area < Critical level.
F - Failed fraction or key line test.
H - Halflife limit exceeded

---------- S U M M A R Y ----------

Total Activity (41.2 to 2632.4 keV) 2.7837461E+01 pCi/g

Laboratory: New World Technology

ORTEC g v - i (3263) wan32 G53W2.06 10-MAR-2008 08:10:02
New World Technology Spectrum name: An13EF5.An1

Sample description
Parcel D 70-PDT-086-33 387g
2/15/08 10:10

Acquisition information
Start time: 07-Mar-2008 11:40:09
Live time: 2700
Real time: 2703

- -

***** S U M M A R Y O F N U C L I D E S I N S A M P L E *****

Nuclide		Time of Count Activity pCi/g	Uncertainty Counting pCi/g	2 Sigma Total pCi/g	MDA pCi/g
Ac-228		1.1400E+00	2.9355E-01	2.9659E-01	0.188E+00
AM-241	#B	-5.8460E-02	-2.9900E-01	-2.9901E-01	0.115E+00
Bi-212		1.5363E+00	5.2938E-01	5.3245E-01	0.302E+00
BI-214	F	1.3502E+00	2.0154E-01	2.0769E-01	0.612E-01
CO-60	#F	1.1125E-01	5.9796E-02	5.9939E-02	0.211E-01
CS-137	F	4.0007E-02	5.1919E-02	5.1940E-02	0.386E-01
EU-152	B	6.8920E-02	1.3236E-01	1.3239E-01	0.960E-01
EU-154	F	1.4792E-01	6.7870E-02	6.8090E-02	0.725E-01
K-40		1.0840E+01	1.4662E+00	1.5204E+00	0.242E+00
Pa-234	B	6.2286E-02	1.1037E-01	1.1039E-01	0.119E+00
Pb-210		3.7422E+00	1.7269E+00	1.7324E+00	0.134E+01
Pb-212		1.5324E+00	1.7384E-01	1.8292E-01	0.104E+00
PB-214		1.1556E+00	1.7641E-01	1.8156E-01	0.107E+00
RA-226		2.4804E+00	1.3123E+00	1.3155E+00	0.100E+01
Th-230	#B	-5.2354E+00	-2.8246E+01	-2.8247E+01	0.107E+02
Th-234	F	1.1097E+00	1.0147E+00	1.0156E+00	0.106E+01
Tl-208	F	4.6721E-01	8.4409E-02	8.6175E-02	0.117E+00
U-235	#B	-8.3393E-01	-2.0422E+00	-2.0424E+00	0.111E+00

- All peaks for activity calculation had bad shape.
* - Activity omitted from total
& - Activity omitted from total and all peaks had bad shape.
< - MDA value printed.
A - Activity printed, but activity < MDA.
B - Activity < MDA and failed test.
C - Area < Critical level.
F - Failed fraction or key line test.
H - Halflife limit exceeded

---------- S U M M A R Y ----------

Total Activity (41.2 to 2632.4 keV) 2.3888010E+01 pCi/g

Laboratory: New World Technology

ORTEC g v - i (3263) wan32 G53W2.06 10-MAR-2008 08:15:12
New World Technology Spectrum name: An13F35.An1

Sample description
Parcel D 70-PDT-086-33DUP 387g
2/15/08 10:10

Acquisition information
Start time: 07-Mar-2008 13:56:24
Live time: 2700
Real time: 2703

- -

***** S U M M A R Y O F N U C L I D E S I N S A M P L E *****

Nuclide		Time of Count Activity pCi/g	Uncertainty Counting pCi/g	2 Sigma Total pCi/g	MDA pCi/g
Ac-228		1.0836E+00	3.2843E-01	3.3089E-01	0.228E+00
AM-241	#B	-1.3436E-01	-1.9671E+00	-1.9671E+00	0.101E+00
Bi-212	F	1.4908E+00	4.8062E-01	4.8380E-01	0.243E+00
BI-214	F	1.3350E+00	2.3045E-01	2.3573E-01	0.881E-01
CO-60	#F	2.5112E-02	2.6562E-02	2.6578E-02	0.188E-01
CS-137	B	2.7879E-02	4.7680E-02	4.7691E-02	0.362E-01
EU-152	F	2.4429E-01	1.2788E-01	1.2820E-01	0.102E+00
EU-154	F	2.0553E-01	1.3247E-01	1.3269E-01	0.708E-01
K-40		1.1045E+01	1.4073E+00	1.4659E+00	0.104E+00
Pa-234	B	3.8838E-02	1.2545E-01	1.2546E-01	0.119E+00
Pb-210		2.8486E+00	1.2755E+00	1.2799E+00	0.953E+00
Pb-212		1.4155E+00	1.7327E-01	1.8107E-01	0.106E+00
PB-214		1.4060E+00	2.3593E-01	2.4164E-01	0.102E+00
RA-226		2.3699E+00	1.2498E+00	1.2529E+00	0.929E+00
Th-230	#B	-1.0593E+01	-6.5246E+01	-6.5247E+01	0.112E+02
Th-234	F	1.4389E+00	6.6510E-01	6.6722E-01	0.103E+01
Tl-208		6.2407E-01	9.1923E-02	9.4802E-02	0.730E-01
U-235	#B	-8.6716E-01	-4.0909E+00	-4.0910E+00	0.109E+00

- All peaks for activity calculation had bad shape.
* - Activity omitted from total
& - Activity omitted from total and all peaks had bad shape.
< - MDA value printed.
A - Activity printed, but activity < MDA.
B - Activity < MDA and failed test.
C - Area < Critical level.
F - Failed fraction or key line test.
H - Halflife limit exceeded

---------- S U M M A R Y ----------

Total Activity (41.2 to 2632.4 keV) 2.3618746E+01 pCi/g

Laboratory: New World Technology

ORTEC g v - i (3263) wan32 G53W2.06 08-MAR-2008 15:05:56
New World Technology Spectrum name: An11BE.An1

Sample description
Parcel D 70-PDT-086-61 374g
2/26/08 10:40

Acquisition information
Start time: 07-Mar-2008 11:43:30
Live time: 2700
Real time: 2704

- -

***** S U M M A R Y O F N U C L I D E S I N S A M P L E *****

Nuclide		Time of Count Activity pCi/g	Uncertainty Counting pCi/g	2 Sigma Total pCi/g	MDA pCi/g
Ac-228		1.4825E+00	3.4048E-01	3.4489E-01	0.203E+00
AM-241	#A	-2.6131E-02	-2.8430E-01	-2.8430E-01	0.138E+00
Bi-212	F	8.0489E-01	5.4994E-01	5.5075E-01	0.426E+00
BI-214	F	1.2276E+00	2.0750E-01	2.1244E-01	0.755E-01
CO-60	#B	-1.0270E-01	-4.4955E-01	-4.4957E-01	0.470E-01
CS-137	B	1.9636E-02	4.5935E-02	4.5941E-02	0.360E-01
EU-152	#B	5.1149E-02	6.7422E-02	6.7449E-02	0.117E+00
EU-154	#B	1.6002E-02	2.2264E-02	2.2272E-02	0.682E-01
K-40		1.0045E+01	1.9325E+00	1.9681E+00	0.114E+01
Pa-234	F	2.8461E-01	1.9028E-01	1.9057E-01	0.132E+00
Pb-210	#	3.4235E+00	1.2982E+00	1.3044E+00	0.858E+00
Pb-212		1.3652E+00	1.4890E-01	1.5728E-01	0.861E-01
PB-214		1.0372E+00	1.6207E-01	1.6657E-01	0.952E-01
RA-226		2.6079E+00	1.3992E+00	1.4026E+00	0.111E+01
Th-230	#B	-2.9671E+01	-2.7783E+02	-2.7783E+02	0.981E+01
Th-234	F	2.6705E+00	1.1920E+00	1.1961E+00	0.921E+00
Tl-208	F	5.3931E-01	9.7283E-02	9.9320E-02	0.467E-01
U-235	#B	-3.4684E-01	-4.2742E-01	-4.2761E-01	0.101E+00

- All peaks for activity calculation had bad shape.
* - Activity omitted from total
& - Activity omitted from total and all peaks had bad shape.
< - MDA value printed.
A - Activity printed, but activity < MDA.
B - Activity < MDA and failed test.
C - Area < Critical level.
F - Failed fraction or key line test.
H - Halflife limit exceeded

---------- S U M M A R Y ----------

Total Activity (41.1 to 2612.4 keV) 2.5487976E+01 pCi/g

Laboratory: New World Technology

ORTEC g v - i (3263) wan32 G53W2.06 08-MAR-2008 15:15:23
New World Technology Spectrum name: An11C2.An1

Sample description
Parcel D 70-PDT-086-61DUP 374g
2/26/08 10:40

Acquisition information
Start time: 07-Mar-2008 13:53:02
Live time: 2700
Real time: 2704

- -

***** S U M M A R Y O F N U C L I D E S I N S A M P L E *****

Nuclide		Time of Count Activity pCi/g	Uncertainty Counting pCi/g	2 Sigma Total pCi/g	MDA pCi/g
Ac-228		1.1839E+00	3.5846E-01	3.6114E-01	0.212E+00
AM-241	#A	-1.8140E-02	-2.4192E-01	-2.4192E-01	0.139E+00
Bi-212	F	4.7420E-01	4.8775E-01	4.8807E-01	0.408E+00
BI-214	F	1.0580E+00	1.7373E-01	1.7811E-01	0.619E-01
CO-60	#B	-9.6582E-02	-9.9395E-01	-9.9395E-01	0.536E-01
CS-137	B	1.7325E-02	3.8259E-02	3.8265E-02	0.296E-01
EU-152	F	1.1289E-01	1.1553E-01	1.1561E-01	0.107E+00
EU-154	F	1.0055E-01	9.4294E-02	9.4368E-02	0.787E-01
K-40		1.2996E+01	1.9102E+00	1.9701E+00	0.101E+01
Pa-234	#B	9.6059E-02	1.5018E-01	1.5022E-01	0.113E+00
Pb-210	#	3.2323E+00	1.8204E+00	1.8244E+00	0.112E+01
Pb-212		1.5672E+00	1.5239E-01	1.6311E-01	0.827E-01
PB-214		9.6415E-01	1.6272E-01	1.6661E-01	0.976E-01
RA-226		2.6271E+00	1.3115E+00	1.3152E+00	0.106E+01
Th-230	#B	-2.0905E+01	-5.5843E+01	-5.5849E+01	0.102E+02
Th-234	F	1.4867E+00	1.2075E+00	1.2088E+00	0.101E+01
Tl-208	F	4.3528E-01	8.5955E-02	8.7459E-02	0.531E-01
U-235	#B	-3.1938E-01	-2.8114E-01	-2.8138E-01	0.103E+00

- All peaks for activity calculation had bad shape.
* - Activity omitted from total
& - Activity omitted from total and all peaks had bad shape.
< - MDA value printed.
A - Activity printed, but activity < MDA.
B - Activity < MDA and failed test.
C - Area < Critical level.
F - Failed fraction or key line test.
H - Halflife limit exceeded

---------- S U M M A R Y ----------

Total Activity (41.1 to 2612.4 keV) 2.5550447E+01 pCi/g

Laboratory: New World Technology

ORTEC g v - i (3263) wan32 G53W2.06 08-MAR-2008 15:49:20
New World Technology Spectrum name: An113D.An1

Sample description
Parcel D 70-PDT-086-62 364g
2/26/08 10:44

Acquisition information
Start time: 07-Mar-2008 15:10:42
Live time: 2700
Real time: 2702

- -

***** S U M M A R Y O F N U C L I D E S I N S A M P L E *****

Nuclide		Time of Count Activity pCi/g	Uncertainty Counting pCi/g	2 Sigma Total pCi/g	MDA pCi/g
AC-228		1.7901E+00	3.6183E-01	3.6786E-01	0.133E+00
AM-241	B	3.1071E-02	1.5552E-01	1.5553E-01	0.129E+00
BI-212	F	8.3294E-01	5.0166E-01	5.0261E-01	0.353E+00
BI-214	F	1.2407E+00	2.3196E-01	2.3648E-01	0.907E-01
CO-60	#F	4.5732E-02	4.0716E-02	4.0752E-02	0.176E-01
CS-137	B	1.3346E-02	4.0727E-02	4.0730E-02	0.320E-01
EU-152	B	-9.8435E-02	-5.4183E-01	-5.4184E-01	0.117E+00
EU-154	F	8.2661E-02	1.0488E-01	1.0492E-01	0.734E-01
K-40	#	1.2631E+01	1.5031E+00	1.5743E+00	0.104E+00
PA-234	F	2.1064E-01	1.1953E-01	1.1979E-01	0.111E+00
PB-210	#	1.8255E+00	1.3515E+00	1.3532E+00	0.101E+01
PB-212	F	1.6450E+00	1.5823E-01	1.6958E-01	0.816E-01
PB-214		1.1614E+00	1.6705E-01	1.7251E-01	0.102E+00
RA-226		1.7270E+00	1.2082E+00	1.2099E+00	0.957E+00
Th-230	#B	-1.4766E+01	-9.5064E+01	-9.5065E+01	0.121E+02
TH-234	B	6.1893E-01	8.8588E-01	8.8618E-01	0.105E+01
TL-208	F	2.4643E-01	5.6764E-02	5.7494E-02	0.124E+00
U-235	#B	-5.8479E-01	-4.6977E-01	-4.7027E-01	0.109E+00

- All peaks for activity calculation had bad shape.
* - Activity omitted from total
& - Activity omitted from total and all peaks had bad shape.
< - MDA value printed.
A - Activity printed, but activity < MDA.
B - Activity < MDA and failed test.
C - Area < Critical level.
F - Failed fraction or key line test.
H - Halflife limit exceeded

---------- S U M M A R Y ----------

Total Activity (41.9 to 2667.7 keV) 2.2898989E+01 pCi/g

Laboratory: New World Technology

ORTEC g v - i (3263) wan32 G53W2.06 08-MAR-2008 15:51:19
New World Technology Spectrum name: An1142.An1

Sample description
Parcel D 70-PDT-086-62DUP 364g
2/26/08 10:44

Acquisition information
Start time: 07-Mar-2008 16:57:56
Live time: 2700
Real time: 2702

- -

***** S U M M A R Y O F N U C L I D E S I N S A M P L E *****

Nuclide		Time of Count Activity pCi/g	Uncertainty Counting pCi/g	2 Sigma Total pCi/g	MDA pCi/g
AC-228		1.7976E+00	4.0131E-01	4.0681E-01	0.148E+00
AM-241	#B	3.4472E-02	1.2668E-01	1.2669E-01	0.101E+00
BI-212	F	1.7121E+00	6.2163E-01	6.2486E-01	0.286E+00
BI-214	F	1.3733E+00	2.0199E-01	2.0831E-01	0.676E-01
CO-60	#B	1.7324E-02	3.9818E-02	3.9823E-02	0.274E-01
CS-137	B	2.7001E-02	5.3211E-02	5.3221E-02	0.414E-01
EU-152	B	-3.1124E-02	-3.9278E-02	-3.9295E-02	0.116E+00
EU-154	F	2.4006E-01	1.2741E-01	1.2772E-01	0.741E-01
K-40		1.2943E+01	1.5215E+00	1.5954E+00	0.104E+00
PA-234	F	2.2354E-01	1.2043E-01	1.2072E-01	0.134E+00
PB-210		3.4554E+00	1.6156E+00	1.6206E+00	0.106E+01
PB-212	F	1.6455E+00	1.5736E-01	1.6878E-01	0.789E-01
PB-214		1.3086E+00	1.9005E-01	1.9615E-01	0.108E+00
RA-226		1.8214E+00	1.3349E+00	1.3366E+00	0.106E+01
Th-230	#B	-7.3864E+00	-3.5839E+01	-3.5840E+01	0.122E+02
TH-234	#B	-2.4723E-01	-4.5070E-01	-4.5079E-01	0.105E+01
TL-208	F	4.2293E-01	8.6178E-02	8.7593E-02	0.103E+00
U-235	#B	-7.6399E-01	-1.2213E+00	-1.2217E+00	0.109E+00

- All peaks for activity calculation had bad shape.
* - Activity omitted from total
& - Activity omitted from total and all peaks had bad shape.
< - MDA value printed.
A - Activity printed, but activity < MDA.
B - Activity < MDA and failed test.
C - Area < Critical level.
F - Failed fraction or key line test.
H - Halflife limit exceeded

---------- S U M M A R Y ----------

Total Activity (41.9 to 2667.7 keV) 2.6480227E+01 pCi/g

Laboratory: New World Technology

ATTACHMENT 6

OFF-SITE LABORATORY SAMPLE RESULTS

This page intentionally left blank.

E B E R L I N E S E R V I C E S / R I C H M O N D

SAMPLE DELIVERY GROUP 8836

8836-001 06NPBRA0-007

D A T A S H E E T

SDG	8836	Client	Tetra Tech EC, Inc.
Contact	Melissa C. Mannion	Contract	59371
Lab sample id	R611056-01	Client sample id	06NPBRA0-007
Dept sample id	8836-001	Location/Matrix	HPS, IR-07 SOIL
Received	11/09/06	Collected/Weight	04/26/06 12:00 457 g
		Custody/Proj. No.	22140 CTO_6

ANALYTE	CAS NO	RESULT pCi/g	2σ ERR (TOTAL)	MDA pCi/g	RDL pCi/g	QUALI-FIERS	TEST
Potassium-40	13966-00-2	7.31	1.5	0.646			GAM
Cobalt-60	10198-40-0	U		0.059	0.036	U	GAM
Cesium-137	10045-97-3	U		0.045	0.113	U	GAM
Europium-152	14683-23-9	U		0.429	0.130	U	GAM
Europium-154	15585-10-1	U		0.181	0.230	U	GAM
Thallium-208	14913-50-9	0.095	0.042	0.042			GAM
Lead-210	14255-04-0	0.480	0.32	0.403			GAM
Bismuth-212	14913-49-6	U		0.608		U	GAM
Lead-212	15092-94-1	0.166	0.038	0.032			GAM
Bismuth-214	14733-03-0	0.316	0.10	0.088			GAM
Lead-214	15067-28-4	0.184	0.059	0.057			GAM
Radium-226	13982-63-3	0.307	0.10	0.086	1.00		GAM
Actinium-228	14331-83-0	U		0.255		U	GAM
Thorium-230	14269-63-7	U		2.68		U	GAM
Thorium-232	7440-29-1	0.512	0.24	0.217	1.69		GAM
Protactinium-234m	378783-76-7	U		8.91		U	GAM
Thorium-234	15065-10-8	U		0.013		U	GAM
Uranium-235	15117-96-1	U		0.076	0.195	U	GAM
Americium-241	14596-10-2	U		0.040		U	GAM

Gamma Spec. Method - EPA 901.1

Lab id	EBERL
Protocol	TTFW-CTO6
Version	Ver 1.0
Form	DVD-DS
Version	3.06
Report date	11/13/06

EBERLINE SERVICES/RICHMOND

SAMPLE DELIVERY GROUP 8836

8836-002 06NPBRA0-016

DATA SHEET

SDG	8836	Client	Tetra Tech EC, Inc.
Contact	Melissa C. Mannion	Contract	59371
Lab sample id	R611056-02	Client sample id	06NPBRA0-016
Dept sample id	8836-002	Location/Matrix	HPS, IR-07 SOIL
Received	11/09/06	Collected/Weight	04/26/06 12:00 458 g
		Custody/Proj. No.	22140 CTO_6

ANALYTE	CAS NO	RESULT pCi/g	2σ ERR (TOTAL)	MDA pCi/g	RDL pCi/g	QUALI-FIERS	TEST
Potassium-40	13966-00-2	6.31	0.96	0.117			GAM
Cobalt-60	10198-40-0	U		0.018	0.036	U	GAM
Cesium-137	10045-97-3	U		0.015	0.113	U	GAM
Europium-152	14683-23-9	U		0.151	0.130	U	GAM
Europium-154	15585-10-1	U		0.057	0.230	U	GAM
Thallium-208	14913-50-9	0.077	0.021	0.014			GAM
Lead-210	14255-04-0	1.06	0.69	0.971			GAM
Bismuth-212	14913-49-6	0.370	0.20	0.184			GAM
Lead-212	15092-94-1	0.305	0.057	0.023			GAM
Bismuth-214	14733-03-0	0.194	0.051	0.028			GAM
Lead-214	15067-28-4	0.197	0.048	0.027			GAM
Radium-226	13982-63-3	0.188	0.050	0.027	1.00		GAM
Actinium-228	14331-83-0	U		0.082		U	GAM
Thorium-230	14269-63-7	U		3.05		U	GAM
Thorium-232	7440-29-1	0.287	0.089	0.073	1.69		GAM
Protactinium-234m	378783-76-7	U		2.74		U	GAM
Thorium-234	15065-10-8	U		0.011		U	GAM
Uranium-235	15117-96-1	U		0.062	0.195	U	GAM
Americium-241	14596-10-2	U		0.064		U	GAM

Gamma Spec. Method - EPA 901.1

Lab id	EBERL
Protocol	TTFW-CTO6
Version	Ver 1.0
Form	DVD-DS
Version	3.06
Report date	11/13/06

EBERLINE SERVICES/RICHMOND

SAMPLE DELIVERY GROUP 8855

8855-014 70-B9391NV-001

DATA SHEET

SDG	8855	Client	Tetra Tech EC, Inc.
Contact	Melissa C. Mannion	Contract	1023426
Lab sample id	R803072-14	Client sample id	70-B9391NV-001
Dept sample id	8855-014	Location/Matrix	SOIL
Received	03/13/08	Collected/Weight	03/13/08 10:00 401 g
		Custody/Proj. No.	39274 TO 70

ANALYTE	CAS NO	RESULT pCi/g	2σ ERR (TOTAL)	MDA pCi/g	RDL pCi/g	QUALI-FIERS	TEST
Potassium-40	13966-00-2	U		1.23		U	GAM
Cobalt-60	10198-40-0	U		0.069	0.036	U	GAM
Cesium-137	10045-97-3	U		0.078	0.113	U	GAM
Europium-152	14683-23-9	U		0.538	0.130	U	GAM
Europium-154	15585-10-1	U		0.232	0.230	U	GAM
Thallium-208	14913-50-9	0.126	0.073	0.076			GAM
Lead-210	14255-04-0	1.48	0.75	1.05			GAM
Bismuth-212	14913-49-6	U		0.880		U	GAM
Lead-212	15092-94-1	0.379	0.11	0.111			GAM
Bismuth-214	14733-03-0	12.0	1.8	0.146			GAM
Lead-214	15067-28-4	13.2	2.0	0.187			GAM
Radium-226	13982-63-3	11.6	1.8	0.142	1.00		GAM
Actinium-228	14331-83-0	U		0.314		U	GAM
Thorium-230	14269-63-7	U		5.97		U	GAM
Thorium-232	7440-29-1	0.372	0.26	0.271	1.69		GAM
Protactinium-234m	378783-76-7	U		11.1		U	GAM
Thorium-234	15065-10-8	U		0.031		U	GAM
Uranium-235	15117-96-1	U		0.306	0.195	U	GAM
Americium-241	14596-10-2	U		0.089		U	GAM

Gamma Spec. Method - EPA 901.1

Lab id	EBERL
Protocol	TTFW-TO70
Version	Ver 1.0
Form	DVD-DS
Version	3.06
Report date	03/27/08

EBERLINE SERVICES/RICHMOND

SAMPLE DELIVERY GROUP 8861

8861-015 6PBFS-055-105

DATA SHEET

SDG	8861	Client	Tetra Tech EC, Inc.
Contact	Melissa C. Mannion	Contract	1018288
Lab sample id	R804077-15	Client sample id	6PBFS-055-105
Dept sample id	8861-015	Location/Matrix	HPS - IR07 SOIL
Received	04/10/08	Collected/Weight	02/28/08 11:46 383 g
		Custody/Proj. No.	34918 CTO_6

ANALYTE	CAS NO	RESULT pCi/g	2σ ERR (TOTAL)	MDA pCi/g	RDL pCi/g	QUALI-FIERS	TEST
Potassium-40	13966-00-2	6.08	0.94	0.128			GAM
Cobalt-60	10198-40-0	U		0.013	0.036	U	GAM
Cesium-137	10045-97-3	U		0.011	0.113	U	GAM
Europium-152	14683-23-9	U		0.118	0.130	U	GAM
Europium-154	15585-10-1	U		0.033	0.230	U	GAM
Thallium-208	14913-50-9	0.285	0.046	0.015			GAM
Lead-210	14255-04-0	U		0.700		U	GAM
Bismuth-212	14913-49-6	1.04	0.23	0.192			GAM
Lead-212	15092-94-1	0.883	0.13	0.020			GAM
Bismuth-214	14733-03-0	0.664	0.10	0.027			GAM
Lead-214	15067-28-4	0.757	0.12	0.033			GAM
Radium-226	13982-63-3	0.645	0.10	0.026	1.00		GAM
Actinium-228	14331-83-0	U		0.107		U	GAM
Thorium-230	14269-63-7	U		7.50		U	GAM
Thorium-232	7440-29-1	0.932	0.15	0.057	1.69		GAM
Protactinium-234m	378783-76-7	U		1.95		U	GAM
Thorium-234	15065-10-8	U		0.012		U	GAM
Uranium-235	15117-96-1	U		0.097	0.195	U	GAM
Americium-241	14596-10-2	U		0.042		U	GAM

Gamma Spec. Method - EPA 901.1

Lab id	EBERL
Protocol	TTFW-CTO6
Version	Ver 1.0
Form	DVD-DS
Version	3.06
Report date	04/30/08

EBERLINE SERVICES/RICHMOND

SAMPLE DELIVERY GROUP 8861

8861-013 6PBFS-055-109

DATA SHEET

SDG	8861	Client	Tetra Tech EC, Inc.
Contact	Melissa C. Mannion	Contract	1018288
Lab sample id	R804077-13	Client sample id	6PBFS-055-109
Dept sample id	8861-013	Location/Matrix	HPS - IR07 SOIL
Received	04/10/08	Collected/Weight	02/28/08 11:09 372 g
		Custody/Proj. No.	34918 CTO_6

ANALYTE	CAS NO	RESULT pCi/g	2σ ERR (TOTAL)	MDA pCi/g	RDL pCi/g	QUALI-FIERS	TEST
Potassium-40	13966-00-2	5.68	0.94	0.203			GAM
Cobalt-60	10198-40-0	U		0.021	0.036	U	GAM
Cesium-137	10045-97-3	U		0.022	0.113	U	GAM
Europium-152	14683-23-9	U		0.212	0.130	U	GAM
Europium-154	15585-10-1	U		0.065	0.230	U	GAM
Thallium-208	14913-50-9	0.316	0.056	0.028			GAM
Lead-210	14255-04-0	U		1.29		U	GAM
Bismuth-212	14913-49-6	1.23	0.35	0.336			GAM
Lead-212	15092-94-1	0.989	0.15	0.035			GAM
Bismuth-214	14733-03-0	0.650	0.11	0.054			GAM
Lead-214	15067-28-4	0.766	0.13	0.061			GAM
Radium-226	13982-63-3	0.632	0.11	0.053	1.00		GAM
Actinium-228	14331-83-0	U		0.197		U	GAM
Thorium-230	14269-63-7	U		4.22		U	GAM
Thorium-232	7440-29-1	1.12	0.21	0.098	1.69		GAM
Protactinium-234m	378783-76-7	U		3.48		U	GAM
Thorium-234	15065-10-8	U		0.021		U	GAM
Uranium-235	15117-96-1	U		0.125	0.195	U	GAM
Americium-241	14596-10-2	U		0.078		U	GAM

Gamma Spec. Method - EPA 901.1

Lab id	EBERL
Protocol	TTFW-CTO6
Version	Ver 1.0
Form	DVD-DS
Version	3.06
Report date	04/30/08

EBERLINE SERVICES/RICHMOND

SAMPLE DELIVERY GROUP 8861

8861-011 6BFS-055-110

DATA SHEET

SDG	8861	Client	Tetra Tech EC, Inc.
Contact	Melissa C. Mannion	Contract	1018288
Lab sample id	R804077-11	Client sample id	6BFS-055-110
Dept sample id	8861-011	Location/Matrix	HPS - IR07 SOIL
Received	04/10/08	Collected/Weight	02/28/08 11:03 367 g
		Custody/Proj. No.	34918 CTO 6

ANALYTE	CAS NO	RESULT pCi/g	2σ ERR (TOTAL)	MDA pCi/g	RDL pCi/g	QUALI-FIERS	TEST
Potassium-40	13966-00-2	6.32	1.1	0.378			GAM
Cobalt-60	10198-40-0	U		0.064	0.036	U	GAM
Cesium-137	10045-97-3	U		0.038	0.113	U	GAM
Europium-152	14683-23-9	U		0.370	0.130	U	GAM
Europium-154	15585-10-1	U		0.151	0.230	U	GAM
Thallium-208	14913-50-9	0.363	0.068	0.037			GAM
Lead-210	14255-04-0	0.972	0.57	0.724			GAM
Bismuth-212	14913-49-6	1.05	0.44	0.496			GAM
Lead-212	15092-94-1	1.04	0.16	0.051			GAM
Bismuth-214	14733-03-0	U		0.131		U	GAM
Lead-214	15067-28-4	U		0.129		U	GAM
Radium-226	13982-63-3	U		0.128	1.00	U	GAM
Actinium-228	14331-83-0	U		0.268		U	GAM
Thorium-230	14269-63-7	U		4.00		U	GAM
Thorium-232	7440-29-1	1.12	0.23	0.141	1.69		GAM
Protactinium-234m	378783-76-7	U		5.28		U	GAM
Thorium-234	15065-10-8	U		0.026		U	GAM
Uranium-235	15117-96-1	U		0.174	0.195	U	GAM
Americium-241	14596-10-2	U		0.057		U	GAM

Gamma Spec. Method - EPA 901.1

Lab id	EBERL
Protocol	TTFW-CTO6
Version	Ver 1.0
Form	DVD-DS
Version	3.06
Report date	04/30/08

EBERLINE SERVICES/RICHMOND

SAMPLE DELIVERY GROUP 8863

8863-013 70-PD-C0080-42

DATA SHEET

SDG	8863	Client	Tetra Tech EC, Inc.
Contact	Melissa C. Mannion	Contract	1023426
Lab sample id	R804079-13	Client sample id	70-PD-C0080-42
Dept sample id	8863-013	Location/Matrix	HPS - TO70 SOIL
Received	04/10/08	Collected/Weight	02/21/08 14:14 349 g
		Custody/Proj. No.	34916 TO_70

ANALYTE	CAS NO	RESULT pCi/g	2σ ERR (TOTAL)	MDA pCi/g	RDL pCi/g	QUALI-FIERS	TEST
Potassium-40	13966-00-2	U		1.16		U	GAM
Cobalt-60	10198-40-0	U		0.043	0.036	U	GAM
Cesium-137	10045-97-3	U		0.045	0.113	U	GAM
Europium-152	14683-23-9	U		0.402	0.130	U	GAM
Europium-154	15585-10-1	U		0.129	0.230	U	GAM
Thallium-208	14913-50-9	0.269	0.066	0.044			GAM
Lead-210	14255-04-0	0.812	0.40	0.538			GAM
Bismuth-212	14913-49-6	1.26	0.53	0.528			GAM
Lead-212	15092-94-1	0.919	0.16	0.062			GAM
Bismuth-214	14733-03-0	0.399	0.13	0.083			GAM
Lead-214	15067-28-4	0.570	0.14	0.100			GAM
Radium-226	13982-63-3	0.387	0.12	0.080	1.00		GAM
Actinium-228	14331-83-0	U		0.286		U	GAM
Thorium-230	14269-63-7	U		3.02		U	GAM
Thorium-232	7440-29-1	0.965	0.25	0.166	1.69		GAM
Protactinium-234m	378783-76-7	U		6.97		U	GAM
Thorium-234	15065-10-8	U		0.021		U	GAM
Uranium-235	15117-96-1	U		0.175	0.195	U	GAM
Americium-241	14596-10-2	U		0.045		U	GAM

Gamma Spec. Method - EPA 901.1

Lab id	EBERL
Protocol	TTFW-TO70
Version	Ver 1.0
Form	DVD-DS
Version	3.06
Report date	05/07/08

EBERLINE SERVICES/RICHMOND

SAMPLE DELIVERY GROUP 8863

8863-014 70-PD-C0081-26

DATA SHEET

SDG	8863	Client	Tetra Tech EC, Inc.
Contact	Melissa C. Mannion	Contract	1023426
Lab sample id	R804079-14	Client sample id	70-PD-C0081-26
Dept sample id	8863-014	Location/Matrix	HPS - TO70 SOIL
Received	04/10/08	Collected/Weight	02/22/08 14:00 364 g
		Custody/Proj. No.	34916 TO_70

ANALYTE	CAS NO	RESULT pCi/g	2σ ERR (TOTAL)	MDA pCi/g	RDL pCi/g	QUALI-FIERS	TEST
Potassium-40	13966-00-2	3.63	1.6	0.183			GAM
Cobalt-60	10198-40-0	U		0.016	0.036	U	GAM
Cesium-137	10045-97-3	U		0.018	0.113	U	GAM
Europium-152	14683-23-9	U		0.156	0.130	U	GAM
Europium-154	15585-10-1	U		0.049	0.230	U	GAM
Thallium-208	14913-50-9	0.341	0.060	0.022			GAM
Lead-210	14255-04-0	U		2.49		U	GAM
Bismuth-212	14913-49-6	1.10	0.29	0.258			GAM
Lead-212	15092-94-1	0.964	0.15	0.026			GAM
Bismuth-214	14733-03-0	0.626	0.11	0.037			GAM
Lead-214	15067-28-4	0.684	0.12	0.042			GAM
Radium-226	13982-63-3	0.608	0.10	0.036	1.00		GAM
Actinium-228	14331-83-0	U		0.120		U	GAM
Thorium-230	14269-63-7	U		3.38		U	GAM
Thorium-232	7440-29-1	1.02	0.19	0.081	1.69		GAM
Protactinium-234m	378783-76-7	U		2.68		U	GAM
Thorium-234	15065-10-8	U		0.015		U	GAM
Uranium-235	15117-96-1	U		0.080	0.195	U	GAM
Americium-241	14596-10-2	U		0.077		U	GAM

Gamma Spec. Method - EPA 901.1

Lab id	EBERL
Protocol	TTFW-TO70
Version	Ver 1.0
Form	DVD-DS
Version	3.06
Report date	05/07/08

EBERLINE SERVICES/RICHMOND

SAMPLE DELIVERY GROUP 8863

8863-007 70-PDT-085-30

DATA SHEET

SDG	8863	Client	Tetra Tech EC, Inc.
Contact	Melissa C. Mannion	Contract	1023426
Lab sample id	R804079-07	Client sample id	70-PDT-085-30
Dept sample id	8863-007	Location/Matrix	HPS - TO70 SOIL
Received	04/10/08	Collected/Weight	02/20/08 09:46 385 g
		Custody/Proj. No.	33911 TO_70

ANALYTE	CAS NO	RESULT pCi/g	2σ ERR (TOTAL)	MDA pCi/g	RDL pCi/g	QUALI-FIERS	TEST
Potassium-40	13966-00-2	5.98	1.0	0.292			GAM
Cobalt-60	10198-40-0	U		0.028	0.036	U	GAM
Cesium-137	10045-97-3	U		0.029	0.113	U	GAM
Europium-152	14683-23-9	U		0.291	0.130	U	GAM
Europium-154	15585-10-1	U		0.079	0.230	U	GAM
Thallium-208	14913-50-9	0.491	0.082	0.033			GAM
Lead-210	14255-04-0	U		1.68		U	GAM
Bismuth-212	14913-49-6	1.66	0.45	0.418			GAM
Lead-212	15092-94-1	1.96	0.30	0.073			GAM
Bismuth-214	14733-03-0	0.932	0.16	0.065			GAM
Lead-214	15067-28-4	1.02	0.17	0.078			GAM
Radium-226	13982-63-3	0.906	0.15	0.064	1.00		GAM
Actinium-228	14331-83-0	U		0.268		U	GAM
Thorium-230	14269-63-7	U		4.89		U	GAM
Thorium-232	7440-29-1	1.57	0.28	0.148	1.69		GAM
Protactinium-234m	378783-76-7	U		5.76		U	GAM
Thorium-234	15065-10-8	U		0.027		U	GAM
Uranium-235	15117-96-1	U		0.164	0.195	U	GAM
Americium-241	14596-10-2	U		0.104		U	GAM

Gamma Spec. Method - EPA 901.1

Lab id	EBERL
Protocol	TTFW-TO70
Version	Ver 1.0
Form	DVD-DS
Version	3.06
Report date	05/07/08

EBERLINE SERVICES/RICHMOND

SAMPLE DELIVERY GROUP 8863

8863-006 70-PDT-085-31

DATA SHEET

SDG	8863	Client	Tetra Tech EC, Inc.
Contact	Melissa C. Mannion	Contract	1023426
Lab sample id	R804079-06	Client sample id	70-PDT-085-31
Dept sample id	8863-006	Location/Matrix	HPS - TO70 SOIL
Received	04/10/08	Collected/Weight	02/20/08 09:50 344 g
		Custody/Proj. No.	33911 TO_70

ANALYTE	CAS NO	RESULT pCi/g	2σ ERR (TOTAL)	MDA pCi/g	RDL pCi/g	QUALI-FIERS	TEST
Potassium-40	13966-00-2	7.48	1.3	0.412			GAM
Cobalt-60	10198-40-0	U		0.042	0.036	U	GAM
Cesium-137	10045-97-3	U		0.038	0.113	U	GAM
Europium-152	14683-23-9	U		0.370	0.130	U	GAM
Europium-154	15585-10-1	U		0.129	0.230	U	GAM
Thallium-208	14913-50-9	0.552	0.095	0.041			GAM
Lead-210	14255-04-0	0.757	0.45	0.668			GAM
Bismuth-212	14913-49-6	1.88	0.66	0.658			GAM
Lead-212	15092-94-1	2.18	0.34	0.094			GAM
Bismuth-214	14733-03-0	U		1.85		U	GAM
Lead-214	15067-28-4	U		1.73		U	GAM
Radium-226	13982-63-3	U		1.80	1.00	U	GAM
Actinium-228	14331-83-0	U		0.340		U	GAM
Thorium-230	14269-63-7	U		4.73		U	GAM
Thorium-232	7440-29-1	1.70	0.31	0.145	1.69		GAM
Protactinium-234m	378783-76-7	U		5.80		U	GAM
Thorium-234	15065-10-8	U		0.031		U	GAM
Uranium-235	15117-96-1	U		0.208	0.195	U	GAM
Americium-241	14596-10-2	U		0.070		U	GAM

Gamma Spec. Method - EPA 901.1

Lab id	EBERL
Protocol	TTFW-TO70
Version	Ver 1.0
Form	DVD-DS
Version	3.06
Report date	05/07/08

EBERLINE SERVICES/RICHMOND

SAMPLE DELIVERY GROUP 8863

8863-017 70-PDT-085-31

DUPLICATE

SDG 8863 Client Tetra Tech EC, Inc.

Contact Melissa C. Mannion Contract 1023426

DUPLICATE	ORIGINAL	
Lab sample id R804079-17	Lab sample id R804079-06	Client sample id 70-PDT-085-31
Dept sample id 8863-017	Dept sample id 8863-006	Location/Matrix HPS - TO70 SOIL
	Received 04/10/08	Collected/Weight 02/20/08 09:50 344 g
		Custody/Proj. No. 33911 TO 70

ANALYTE	DUPLICATE pCi/g	2σ ERR (TOTAL)	MDA pCi/g	RDL pCi/g	QUALI-FIERS	TEST	ORIGINAL pCi/g	2σ ERR (TOTAL)	MDA pCi/g	QUALI-FIERS	RPD %	2σ TOT	DER σ
Potassium-40	5.37	1.0	0.458			GAM	7.48	1.3	0.412		33	26	2.6
Cobalt-60	U		0.044	0.036	U	GAM	U		0.042	U	-		0.1
Cesium-137	U		0.041	0.113	U	GAM	U		0.038	U	-		0.1
Europium-152	U		0.402	0.130	U	GAM	U		0.370	U	-		0.1
Europium-154	U		0.123	0.230	U	GAM	U		0.129	U	-		0.1
Thallium-208	0.490	0.088	0.046			GAM	0.552	0.095	0.041		12	25	1.0
Lead-210	U		5.31		U	GAM	0.757	0.45	0.668		150	178	1.7
Bismuth-212	2.02	0.66	0.656			GAM	1.88	0.66	0.658		7	48	0.3
Lead-212	1.87	0.30	0.091			GAM	2.18	0.34	0.094		15	22	1.4
Bismuth-214	0.901	0.17	0.093			GAM	U		1.85	U	69	136	1.0
Lead-214	1.05	0.19	0.109			GAM	U		1.73	U	49	127	0.8
Radium-226	0.875	0.16	0.091	1.00		GAM	U		1.80	U	69	137	1.0
Actinium-228	U		0.357		U	GAM	U		0.340	U	-		0.1
Thorium-230	U		8.47		U	GAM	U		4.73	U	-		0.8
Thorium-232	1.62	0.31	0.181	1.69		GAM	1.70	0.31	0.145		5	26	0.4
Protactinium-234m	U		7.12		U	GAM	U		5.80	U	-		0.3
Thorium-234	U		0.032		U	GAM	U		0.031	U	-		0
Uranium-235	U		0.188	0.195	U	GAM	U		0.208	U	-		0.1
Americium-241	U		0.211		U	GAM	U		0.070	U	-		1.3

QC-DUP#6 65363

Gamma Spec. Method - EPA 901.1

Lab id EBERL
Protocol TTFW-TO70
Version Ver 1.0
Form DVD-DUP
Version 3.06
Report date 05/07/08

EBERLINE SERVICES/RICHMOND

SAMPLE DELIVERY GROUP 8863

8863-005 70-PDT-085-33

DATA SHEET

SDG	8863	Client	Tetra Tech EC, Inc.
Contact	Melissa C. Mannion	Contract	1023426
Lab sample id	R804079-05	Client sample id	70-PDT-085-33
Dept sample id	8863-005	Location/Matrix	HPS - TO70 SOIL
Received	04/10/08	Collected/Weight	02/20/08 09:58 373 g
		Custody/Proj. No.	33911 TO_70

ANALYTE	CAS NO	RESULT pCi/g	2σ ERR (TOTAL)	MDA pCi/g	RDL pCi/g	QUALI-FIERS	TEST
Potassium-40	13966-00-2	6.14	1.7	0.176			GAM
Cobalt-60	10198-40-0	U		0.017	0.036	U	GAM
Cesium-137	10045-97-3	U		0.018	0.113	U	GAM
Europium-152	14683-23-9	U		0.161	0.130	U	GAM
Europium-154	15585-10-1	U		0.052	0.230	U	GAM
Thallium-208	14913-50-9	0.433	0.072	0.021			GAM
Lead-210	14255-04-0	U		2.05		U	GAM
Bismuth-212	14913-49-6	1.44	0.32	0.258			GAM
Lead-212	15092-94-1	1.28	0.20	0.027			GAM
Bismuth-214	14733-03-0	0.888	0.14	0.038			GAM
Lead-214	15067-28-4	0.997	0.16	0.044			GAM
Radium-226	13982-63-3	0.862	0.14	0.037	1.00		GAM
Actinium-228	14331-83-0	U		0.130		U	GAM
Thorium-230	14269-63-7	U		3.94		U	GAM
Thorium-232	7440-29-1	1.43	0.24	0.071	1.69		GAM
Protactinium-234m	378783-76-7	U		3.87		U	GAM
Thorium-234	15065-10-8	U		0.015		U	GAM
Uranium-235	15117-96-1	U		0.101	0.195	U	GAM
Americium-241	14596-10-2	U		0.091		U	GAM

Gamma Spec. Method - EPA 901.1

Lab id	EBERL
Protocol	TTFW-TO70
Version	Ver 1.0
Form	DVD-DS
Version	3.06
Report date	05/07/08

EBERLINE SERVICES/RICHMOND

SAMPLE DELIVERY GROUP 8863

8863-004 70-PDT-086-33

DATA SHEET

SDG	8863	Client	Tetra Tech EC, Inc.
Contact	Melissa C. Mannion	Contract	1023426
Lab sample id	R804079-04	Client sample id	70-PDT-086-33
Dept sample id	8863-004	Location/Matrix	HPS - TO70 SOIL
Received	04/10/08	Collected/Weight	02/15/08 10:10 387 g
		Custody/Proj. No.	33911 TO_70

ANALYTE	CAS NO	RESULT pCi/g	2σ ERR (TOTAL)	MDA pCi/g	RDL pCi/g	QUALI-FIERS	TEST
Potassium-40	13966-00-2	5.54	0.87	0.165			GAM
Cobalt-60	10198-40-0	U		0.015	0.036	U	GAM
Cesium-137	10045-97-3	U		0.014	0.113	U	GAM
Europium-152	14683-23-9	U		0.131	0.130	U	GAM
Europium-154	15585-10-1	U		0.043	0.230	U	GAM
Thallium-208	14913-50-9	0.352	0.055	0.012			GAM
Lead-210	14255-04-0	0.505	0.23	0.306			GAM
Bismuth-212	14913-49-6	1.28	0.28	0.227			GAM
Lead-212	15092-94-1	1.10	0.17	0.021			GAM
Bismuth-214	14733-03-0	U		0.060		U	GAM
Lead-214	15067-28-4	U		1.34		U	GAM
Radium-226	13982-63-3	U		0.058	1.00	U	GAM
Actinium-228	14331-83-0	U		0.120		U	GAM
Thorium-230	14269-63-7	U		11.0		U	GAM
Thorium-232	7440-29-1	1.19	0.19	0.056	1.69		GAM
Protactinium-234m	378783-76-7	U		2.32		U	GAM
Thorium-234	15065-10-8	U		0.012		U	GAM
Uranium-235	15117-96-1	U		0.079	0.195	U	GAM
Americium-241	14596-10-2	U		0.026		U	GAM

Gamma Spec. Method - EPA 901.1

Lab id	EBERL
Protocol	TTFW-TO70
Version	Ver 1.0
Form	DVD-DS
Version	3.06
Report date	05/07/08

EBERLINE SERVICES/RICHMOND

SAMPLE DELIVERY GROUP 8863

8863-003 70-PDT-086-61

DATA SHEET

SDG	8863	Client	Tetra Tech EC, Inc.
Contact	Melissa C. Mannion	Contract	1023426
Lab sample id	R804079-03	Client sample id	70-PDT-086-61
Dept sample id	8863-003	Location/Matrix	HPS - TO70 SOIL
Received	04/10/08	Collected/Weight	02/26/08 10:40 374 g
		Custody/Proj. No.	33911 TO_70

ANALYTE	CAS NO	RESULT pCi/g	2σ ERR (TOTAL)	MDA pCi/g	RDL pCi/g	QUALI-FIERS	TEST
Potassium-40	13966-00-2	4.22	1.8	0.232			GAM
Cobalt-60	10198-40-0	U		0.020	0.036	U	GAM
Cesium-137	10045-97-3	U		0.020	0.113	U	GAM
Europium-152	14683-23-9	U		0.202	0.130	U	GAM
Europium-154	15585-10-1	U		0.066	0.230	U	GAM
Thallium-208	14913-50-9	0.325	0.059	0.022			GAM
Lead-210	14255-04-0	0.768	0.22	0.267			GAM
Bismuth-212	14913-49-6	1.05	0.29	0.260			GAM
Lead-212	15092-94-1	0.970	0.16	0.029			GAM
Bismuth-214	14733-03-0	0.559	0.12	0.044			GAM
Lead-214	15067-28-4	0.676	0.12	0.047			GAM
Radium-226	13982-63-3	0.542	0.12	0.042	1.00		GAM
Actinium-228	14331-83-0	U		0.131		U	GAM
Thorium-230	14269-63-7	U		1.45		U	GAM
Thorium-232	7440-29-1	0.993	0.19	0.084	1.69		GAM
Protactinium-234m	378783-76-7	U		3.26		U	GAM
Thorium-234	15065-10-8	U		0.011		U	GAM
Uranium-235	15117-96-1	U		0.084	0.195	U	GAM
Americium-241	14596-10-2	U		0.022		U	GAM

Gamma Spec. Method - EPA 901.1

Lab id	EBERL
Protocol	TTFW-TO70
Version	Ver 1.0
Form	DVD-DS
Version	3.06
Report date	05/07/08

Tetra Tech EC, Inc.

Client Sample ID: 70-PDT-086-61

Radiochemistry

Lab Sample ID: F8G010127-001
Work Order: KOWLH
Matrix: SOLID

Date Collected: 02/26/08 1040
Date Received: 07/01/08 1100

Parameter	Result	Qual	Total Uncert. (2 σ+/-)	RL	MDC	Prep Date	Analysis Date
Gamma Ra-226 & hits by EPA 901.1 MOD			**pCi/g**		**Batch # 8185283**		**Yld %**
Actinium 228	**1.20**		**0.28**		**0.35**	**07/03/08**	**07/24/08**
Americium 241	0.03	U	0.15		0.25	07/03/08	07/24/08
Bismuth 212	0.37	U	0.49		0.80	07/03/08	07/24/08
Bismuth 214	**1.34**		**0.24**		**0.14**	**07/03/08**	**07/24/08**
Cesium 137	-0.007	U	0.062	0.200	0.11	07/03/08	07/24/08
Cobalt 60	-0.003	U	0.067		0.13	07/03/08	07/24/08
Europium 152	-0.08	U	0.19		0.33	07/03/08	07/24/08
Europium 154	-0.06	U	0.48		0.89	07/03/08	07/24/08
Lead 210	1.2	U	1.7	3.0	2.9	07/03/08	07/24/08
Lead 212	**1.43**		**0.22**		**0.18**	**07/03/08**	**07/24/08**
Lead 214	**1.54**		**0.24**		**0.16**	**07/03/08**	**07/24/08**
Potassium 40	**7.9**		**1.7**		**0.9**	**07/03/08**	**07/24/08**
Protactinium 234	-0.02	U	0.23		0.40	07/03/08	07/24/08
Radium (226)	**1.34**		**0.24**	1.00	**0.14**	**07/03/08**	**07/24/08**
Thallium 208	**0.72**		**0.12**		**0.04**	**07/03/08**	**07/24/08**
Thorium 232	**1.20**		**0.28**		**0.35**	**07/03/08**	**07/24/08**
Thorium 234	1	U	1.5		2.5	07/03/08	07/24/08
Uranium 235	0.18	U	0.36		0.61	07/03/08	07/24/08

NOTE(S)

Data are incomplete without the case narrative.

MDC is determined by instrument performance only.
Bold results are greater than the MDC

U Result is less than the sample detection limit.

Tetra Tech EC, Inc.

Client Sample ID: 70-PDT-086-61 DUP

Radiochemistry

Lab Sample ID: F8G010127-001X
Work Order: KOWLH
Matrix: SOLID

Date Collected: 02/26/08 1040
Date Received: 07/01/08 1100

Parameter	Result	Qual	Total Uncert. (2 σ+/-)	RL	MDC	Prep Date	Analysis Date
Gamma Ra-226 & hits by EPA 901.1 MOD			**pCi/g**		**Batch # 8185283**		**Yld %**
Actinium 228	**1.20**		**0.23**		**0.30**	**07/03/08**	**07/24/08**
Americium 241	-0.04	U	0.11		0.19	07/03/08	07/24/08
Bismuth 212	**1.44**		**0.53**		**0.45**	**07/03/08**	**07/24/08**
Bismuth 214	**1.11**		**0.20**		**0.18**	**07/03/08**	**07/24/08**
Cesium 137	0.026	U	0.046	0.200	0.079	07/03/08	07/24/08
Cobalt 60	0.005	U	0.043		0.082	07/03/08	07/24/08
Europium 152	0.05	U	0.13		0.23	07/03/08	07/24/08
Europium 154	-0.01	U	0.36		0.66	07/03/08	07/24/08
Lead 210	1.4	U	1.4	3.0	2.2	07/03/08	07/24/08
Lead 212	**1.45**		**0.20**		**0.17**	**07/03/08**	**07/24/08**
Lead 214	**1.20**		**0.17**		**0.16**	**07/03/08**	**07/24/08**
Potassium 40	**10.1**		**1.5**		**1.0**	**07/03/08**	**07/24/08**
Protactinium 234	0.004	U	0.21		0.37	07/03/08	07/24/08
Radium (226)	**1.11**		**0.20**	1.00	**0.18**	**07/03/08**	**07/24/08**
Thallium 208	**0.50**		**0.12**		**0.10**	**07/03/08**	**07/24/08**
Thorium 232	**1.20**		**0.23**		**0.30**	**07/03/08**	**07/24/08**
Thorium 234	**2.04**		**0.81**		**2.0**	**07/03/08**	**07/24/08**
Uranium 235	0.15	U	0.32		0.54	07/03/08	07/24/08

NOTE(S)

Data are incomplete without the case narrative.

MDC is determined by instrument performance only.
Bold results are greater than the MDC

U Result is less than the sample detection limit.

Tetra Tech EC, Inc.

Client Sample ID: 70-PDT-086-33

Radiochemistry

Lab Sample ID: F8G010127-002
Work Order: KOWLN
Matrix: SOLID

Date Collected: 02/15/08 1010
Date Received: 07/01/08 1100

Parameter	Result	Qual	Total Uncert. (2 σ+/-)	RL	MDC	Prep Date	Analysis Date
Gamma Ra-226 & hits by EPA 901.1 MOD			**pCi/g**		**Batch # 8185283**		**Yld %**
Actinium 228	**1.18**		**0.29**		**0.41**	**07/03/08**	**07/24/08**
Americium 241	0.0003	U	0.13		0.22	07/03/08	07/24/08
Bismuth 212	0.63	U	0.51		0.78	07/03/08	07/24/08
Bismuth 214	**1.47**		**0.25**		**0.12**	**07/03/08**	**07/24/08**
Cesium 137	-0.02	U	0.15	0.20	0.12	07/03/08	07/24/08
Cobalt 60	0.003	U	0.065		0.13	07/03/08	07/24/08
Europium 152	0.03	U	0.11		0.20	07/03/08	07/24/08
Europium 154	0.0	U	0.42		0.80	07/03/08	07/24/08
Lead 210	1.1	U	1.4	3.0	2.5	07/03/08	07/24/08
Lead 212	**1.68**		**0.21**		**0.14**	**07/03/08**	**07/24/08**
Lead 214	**1.22**		**0.20**		**0.18**	**07/03/08**	**07/24/08**
Potassium 40	**7.1**		**1.5**		**0.5**	**07/03/08**	**07/24/08**
Protactinium 234	0.03	U	0.20		0.35	07/03/08	07/24/08
Radium (226)	**1.47**		**0.25**	1.00	**0.12**	**07/03/08**	**07/24/08**
Thallium 208	**0.63**		**0.12**		**0.07**	**07/03/08**	**07/24/08**
Thorium 232	**1.18**		**0.29**		**0.41**	**07/03/08**	**07/24/08**
Thorium 234	1	U	1.3		2.2	07/03/08	07/24/08
Uranium 235	0.19	U	0.32		0.53	07/03/08	07/24/08

NOTE(S)

Data are incomplete without the case narrative.

MDC is determined by instrument performance only.
Bold results are greater than the MDC

U Result is less than the sample detection limit.

Tetra Tech EC, Inc.

Client Sample ID: 70-PDT-085-33

Radiochemistry

Lab Sample ID: F8G010127-003
Work Order: KOWLP
Matrix: SOLID

Date Collected: 02/20/08 0958
Date Received: 07/01/08 1100

Parameter	Result	Qual	Total Uncert. (2 σ+/-)	RL	MDC	Prep Date	Analysis Date
Gamma Ra-226 & hits by EPA 901.1 MOD			**pCi/g**		**Batch # 8185283**		**Yld %**
Actinium 228	**1.68**		**0.28**		**0.30**	**07/03/08**	**07/24/08**
Americium 241	-0.08	U	0.17		0.28	07/03/08	07/24/08
Bismuth 212	**1.05**		**0.57**		**0.81**	**07/03/08**	**07/24/08**
Bismuth 214	**1.88**		**0.30**		**0.16**	**07/03/08**	**07/24/08**
Cesium 137	0.008	U	0.064	0.200	0.11	07/03/08	07/24/08
Cobalt 60	0.026	U	0.051		0.089	07/03/08	07/24/08
Europium 152	-0.05	U	0.17		0.30	07/03/08	07/24/08
Europium 154	0.004	U	0.45		0.83	07/03/08	07/24/08
Lead 210	1.7	U	1.8	3.0	2.9	07/03/08	07/24/08
Lead 212	**2.04**		**0.23**		**0.20**	**07/03/08**	**07/24/08**
Lead 214	**1.70**		**0.22**		**0.18**	**07/03/08**	**07/24/08**
Potassium 40	**8.5**		**1.6**		**1.3**	**07/03/08**	**07/24/08**
Protactinium 234	0.09	U	0.18		0.30	07/03/08	07/24/08
Radium (226)	**1.88**		**0.30**	1.00	**0.16**	**07/03/08**	**07/24/08**
Thallium 208	**0.89**		**0.15**		**0.1**	**07/03/08**	**07/24/08**
Thorium 232	**1.68**		**0.28**		**0.30**	**07/03/08**	**07/24/08**
Thorium 234	2.03	U	0.95		2.7	07/03/08	07/24/08
Uranium 235	0.22	U	0.38		0.63	07/03/08	07/24/08

NOTE(S)

Data are incomplete without the case narrative.

MDC is determined by instrument performance only.
Bold results are greater than the MDC

U Result is less than the sample detection limit.

Tetra Tech EC, Inc.

Client Sample ID: 70-PDT-085-30

Radiochemistry

Lab Sample ID: F8G010127-004
Work Order: KOWLO
Matrix: SOLID

Date Collected: 02/20/08 0946
Date Received: 07/01/08 1100

Parameter	Result	Qual	Total Uncert. (2 σ+/-)	RL	MDC	Prep Date	Analysis Date
Gamma Ra-226 & hits by EPA 901.1 MOD			**pCi/g**		**Batch # 8185283**		**Yld %**
Actinium 228	**1.85**		**0.38**		**0.27**	**07/03/08**	**07/24/08**
Americium 241	0.05	U	0.17		0.29	07/03/08	07/24/08
Bismuth 212	**1.63**		**0.60**		**0.72**	**07/03/08**	**07/24/08**
Bismuth 214	**1.71**		**0.25**		**0.11**	**07/03/08**	**07/24/08**
Cesium 137	-0.031	U	0.073	0.200	0.13	07/03/08	07/24/08
Cobalt 60	0.013	U	0.059		0.11	07/03/08	07/24/08
Europium 152	-0.10	U	0.19		0.32	07/03/08	07/24/08
Europium 154	-0.04	U	0.46		0.84	07/03/08	07/24/08
Lead 210	0.7	U	1.8	3.0	3.0	07/03/08	07/24/08
Lead 212	**2.53**		**0.29**		**0.16**	**07/03/08**	**07/24/08**
Lead 214	**1.88**		**0.29**		**0.21**	**07/03/08**	**07/24/08**
Potassium 40	**11.2**		**1.8**		**0.5**	**07/03/08**	**07/24/08**
Protactinium 234	-0.15	U	0.26		0.43	07/03/08	07/24/08
Radium (226)	**1.71**		**0.25**	1.00	**0.11**	**07/03/08**	**07/24/08**
Thallium 208	**0.84**		**0.14**		**0.09**	**07/03/08**	**07/24/08**
Thorium 232	**1.85**		**0.38**		**0.27**	**07/03/08**	**07/24/08**
Thorium 234	**3.0**		**1.1**		**2.5**	**07/03/08**	**07/24/08**
Uranium 235	0.17	U	0.39		0.67	07/03/08	07/24/08

NOTE(S)

Data are incomplete without the case narrative.

MDC is determined by instrument performance only.
Bold results are greater than the MDC

U Result is less than the sample detection limit.

Tetra Tech EC, Inc.

Client Sample ID: 70-PD-C0080-42

Radiochemistry

Lab Sample ID: F8G010127-005
Work Order: KOWLR
Matrix: SOLID

Date Collected: 02/21/08 1414
Date Received: 07/01/08 1100

Parameter	Result	Qual	Total Uncert. (2 σ+/-)	RL	MDC	Prep Date	Analysis Date
Gamma Ra-226 & hits by EPA 901.1 MOD			**pCi/g**		**Batch # 8185283**		**Yld %**
Actinium 228	**1.20**		**0.27**		**0.32**	**07/03/08**	**07/24/08**
Americium 241	-0.04	U	0.13		0.23	07/03/08	07/24/08
Bismuth 212	0.75	U	0.53		0.79	07/03/08	07/24/08
Bismuth 214	**1.06**		**0.22**		**0.16**	**07/03/08**	**07/24/08**
Cesium 137	0.0	U	0.047	0.200	0.089	07/03/08	07/24/08
Cobalt 60	-0.007	U	0.062		0.12	07/03/08	07/24/08
Europium 152	0.0	U	0.15		0.26	07/03/08	07/24/08
Europium 154	0.04	U	0.39		0.74	07/03/08	07/24/08
Lead 210	2.0	U	1.9	3.0	2.8	07/03/08	07/24/08
Lead 212	**1.62**		**0.20**		**0.15**	**07/03/08**	**07/24/08**
Lead 214	**1.21**		**0.21**		**0.21**	**07/03/08**	**07/24/08**
Potassium 40	**6.3**		**1.4**		**0.5**	**07/03/08**	**07/24/08**
Protactinium 234	-0.09	U	0.21		0.36	07/03/08	07/24/08
Radium (226)	**1.06**		**0.22**	1.00	**0.16**	**07/03/08**	**07/24/08**
Thallium 208	**0.55**		**0.12**		**0.09**	**07/03/08**	**07/24/08**
Thorium 232	**1.20**		**0.27**		**0.32**	**07/03/08**	**07/24/08**
Thorium 234	0.4	U	1.3		2.3	07/03/08	07/24/08
Uranium 235	0.24	U	0.28		0.46	07/03/08	07/24/08

NOTE(S)

Data are incomplete without the case narrative.

MDC is determined by instrument performance only.
Bold results are greater than the MDC

U Result is less than the sample detection limit.

Tetra Tech EC, Inc.

Client Sample ID: 70-PD-C0081-26

Radiochemistry

Lab Sample ID: F8G010127-006
Work Order: KOWLV
Matrix: SOLID

Date Collected: 02/22/08 1400
Date Received: 07/01/08 1100

Parameter	Result	Qual	Total Uncert. (2 σ+/-)	RL	MDC	Prep Date	Analysis Date
Gamma Ra-226 & hits by EPA 901.1 MOD			**pCi/g**		**Batch # 8185283**		**Yld %**
Actinium 228	**1.57**		**0.33**		**0.40**	**07/03/08**	**07/24/08**
Americium 241	0.05	U	0.13		0.22	07/03/08	07/24/08
Bismuth 212	**1.11**		**0.63**		**0.86**	**07/03/08**	**07/24/08**
Bismuth 214	**1.20**		**0.27**		**0.20**	**07/03/08**	**07/24/08**
Cesium 137	0.002	U	0.071	0.200	0.13	07/03/08	07/24/08
Cobalt 60	0.014	U	0.073		0.14	07/03/08	07/24/08
Europium 152	-0.02	U	0.14		0.25	07/03/08	07/24/08
Europium 154	0.04	U	0.43		0.81	07/03/08	07/24/08
Lead 210	0.8	U	1.7	3.0	3.0	07/03/08	07/24/08
Lead 212	**1.58**		**0.24**		**0.19**	**07/03/08**	**07/24/08**
Lead 214	**1.20**		**0.21**		**0.18**	**07/03/08**	**07/24/08**
Potassium 40	**5.4**		**1.4**		**1.2**	**07/03/08**	**07/24/08**
Protactinium 234	-0.05	U	0.23		0.40	07/03/08	07/24/08
Radium (226)	**1.20**		**0.27**	1.00	**0.20**	**07/03/08**	**07/24/08**
Thallium 208	**0.60**		**0.13**		**0.09**	**07/03/08**	**07/24/08**
Thorium 232	**1.57**		**0.33**		**0.40**	**07/03/08**	**07/24/08**
Thorium 234	1.1	U	1.5		2.6	07/03/08	07/24/08
Uranium 235	0.30	U	0.37		0.60	07/03/08	07/24/08

NOTE(S)

Data are incomplete without the case narrative.

MDC is determined by instrument performance only.
Bold results are greater than the MDC

U Result is less than the sample detection limit.

Tetra Tech EC, Inc.

Client Sample ID: 6PBFS-055-110

Radiochemistry

Lab Sample ID: F8G010127-007
Work Order: KOWLW
Matrix: SOLID

Date Collected: 02/28/08 1103
Date Received: 07/01/08 1100

Parameter	Result	Qual	Total Uncert. (2 σ+/-)	RL	MDC	Prep Date	Analysis Date
Gamma Ra-226 & hits by EPA 901.1 MOD			**pCi/g**		**Batch # 8185283**		**Yld %**
Actinium 228	**1.40**		**0.31**		**0.34**	**07/03/08**	**07/24/08**
Americium 241	0.03	U	0.13		0.23	07/03/08	07/24/08
Bismuth 212	0.50	U	0.52		0.82	07/03/08	07/24/08
Bismuth 214	**1.54**		**0.28**		**0.16**	**07/03/08**	**07/24/08**
Cesium 137	-0.006	U	0.087	0.200	0.13	07/03/08	07/24/08
Cobalt 60	-0.012	U	0.072		0.14	07/03/08	07/24/08
Europium 152	0.003	U	0.15		0.27	07/03/08	07/24/08
Europium 154	-0.08	U	0.52		0.95	07/03/08	07/24/08
Lead 210	0.8	U	1.6	3.0	2.8	07/03/08	07/24/08
Lead 212	**1.46**		**0.22**		**0.18**	**07/03/08**	**07/24/08**
Lead 214	**1.51**		**0.22**		**0.14**	**07/03/08**	**07/24/08**
Potassium 40	**6.0**		**1.6**		**1.3**	**07/03/08**	**07/24/08**
Protactinium 234	0.0	U	0.24		0.41	07/03/08	07/24/08
Radium (226)	**1.54**		**0.28**	1.00	**0.16**	**07/03/08**	**07/24/08**
Thallium 208	**0.64**		**0.14**		**0.1**	**07/03/08**	**07/24/08**
Thorium 232	**1.40**		**0.31**		**0.34**	**07/03/08**	**07/24/08**
Thorium 234	0.6	U	1.4		2.3	07/03/08	07/24/08
Uranium 235	0.01	U	0.33		0.57	07/03/08	07/24/08

NOTE(S)

Data are incomplete without the case narrative.

MDC is determined by instrument performance only.
Bold results are greater than the MDC

U Result is less than the sample detection limit.

Tetra Tech EC, Inc.

Client Sample ID: 6PBFS-055-109

Radiochemistry

Lab Sample ID: F8G010127-008
Work Order: KOWL0
Matrix: SOLID

Date Collected: 02/28/08 1109
Date Received: 07/01/08 1100

Parameter	Result	Qual	Total Uncert. (2 σ+/-)	RL	MDC	Prep Date	Analysis Date
Gamma Ra-226 & hits by EPA 901.1 MOD			**pCi/g**		**Batch # 8185283**		**Yld %**
Actinium 228	**1.56**		**0.30**		**0.35**	**07/03/08**	**07/24/08**
Americium 241	-0.03	U	0.14		0.24	07/03/08	07/24/08
Bismuth 212	**1.72**		**0.54**		**0.36**	**07/03/08**	**07/24/08**
Bismuth 214	**1.64**		**0.25**		**0.12**	**07/03/08**	**07/24/08**
Cesium 137	0.036	U	0.058	0.200	0.098	07/03/08	07/24/08
Cobalt 60	0.022	U	0.052		0.093	07/03/08	07/24/08
Europium 152	-0.03	U	0.15		0.25	07/03/08	07/24/08
Europium 154	0.0	U	0.28		0.55	07/03/08	07/24/08
Lead 210	**2.4**	**J**	**1.7**	3.0	**2.2**	**07/03/08**	**07/24/08**
Lead 212	**1.73**		**0.20**		**0.13**	**07/03/08**	**07/24/08**
Lead 214	**1.34**		**0.19**		**0.18**	**07/03/08**	**07/24/08**
Potassium 40	**6.5**		**1.5**		**1.5**	**07/03/08**	**07/24/08**
Protactinium 234	-0.08	U	0.21		0.36	07/03/08	07/24/08
Radium (226)	**1.64**		**0.25**	1.00	**0.12**	**07/03/08**	**07/24/08**
Thallium 208	**0.71**		**0.11**		**0.06**	**07/03/08**	**07/24/08**
Thorium 232	**1.56**		**0.30**		**0.35**	**07/03/08**	**07/24/08**
Thorium 234	1.50	U	0.80		2.3	07/03/08	07/24/08
Uranium 235	0.21	U	0.32		0.53	07/03/08	07/24/08

NOTE(S)

Data are incomplete without the case narrative.

MDC is determined by instrument performance only.
Bold results are greater than the MDC

J Result is greater than sample detection limit but less than stated reporting limit.
U Result is less than the sample detection limit.

Tetra Tech EC, Inc.

Client Sample ID: 6PBFS-055-105

Radiochemistry

Lab Sample ID: F8G010127-009
Work Order: KOWL5
Matrix: SOLID

Date Collected: 02/28/08 1146
Date Received: 07/01/08 1100

Parameter	Result	Qual	Total Uncert. (2 σ+/-)	RL	MDC	Prep Date	Analysis Date
Gamma Ra-226 & hits by EPA 901.1 MOD			**pCi/g**		**Batch # 8185283**		**Yld %**
Actinium 228	**1.18**		**0.23**		**0.24**	**07/03/08**	**07/24/08**
Americium 241	0.05	U	0.13		0.22	07/03/08	07/24/08
Bismuth 212	-0.29	U	0.53		0.90	07/03/08	07/24/08
Bismuth 214	**1.05**		**0.20**		**0.14**	**07/03/08**	**07/24/08**
Cesium 137	-0.019	U	0.063	0.200	0.11	07/03/08	07/24/08
Cobalt 60	0.021	U	0.057		0.10	07/03/08	07/24/08
Europium 152	-0.05	U	0.15		0.26	07/03/08	07/24/08
Europium 154	-0.09	U	0.50		0.90	07/03/08	07/24/08
Lead 210	1.6	U	1.4	3.0	2.0	07/03/08	07/24/08
Lead 212	**1.14**		**0.18**		**0.20**	**07/03/08**	**07/24/08**
Lead 214	**1.19**		**0.16**		**0.15**	**07/03/08**	**07/24/08**
Potassium 40	**10.1**		**1.7**		**0.8**	**07/03/08**	**07/24/08**
Protactinium 234	-0.09	U	0.21		0.35	07/03/08	07/24/08
Radium (226)	**1.05**		**0.20**	1.00	**0.14**	**07/03/08**	**07/24/08**
Thallium 208	**0.53**		**0.11**		**0.07**	**07/03/08**	**07/24/08**
Thorium 232	**1.18**		**0.23**		**0.24**	**07/03/08**	**07/24/08**
Thorium 234	**1.5**		**1.0**		**1.4**	**07/03/08**	**07/24/08**
Uranium 235	0.09	U	0.32		0.55	07/03/08	07/24/08

NOTE(S)

Data are incomplete without the case narrative.

MDC is determined by instrument performance only.
Bold results are greater than the MDC

U Result is less than the sample detection limit.

Tetra Tech EC, Inc.

Client Sample ID: 70-PDT-085-31

Radiochemistry

Lab Sample ID: F8G010127-010
Work Order: KQWMA
Matrix: SOLID

Date Collected: 02/20/08 0950
Date Received: 07/01/08 1100

Parameter	Result	Qual	Total Uncert. (2 σ+/-)	RL	MDC	Prep Date	Analysis Date
Gamma Ra-226 & hits by EPA 901.1 MOD				**pCi/g**	**Batch # 8185283**		**Yld %**
Actinium 228	**1.57**		**0.38**		**0.37**	**07/03/08**	**07/24/08**
Americium 241	0.002	U	0.17		0.28	07/03/08	07/24/08
Bismuth 212	**1.32**		**0.71**		**1.0**	**07/03/08**	**07/24/08**
Bismuth 214	**1.62**		**0.31**		**0.21**	**07/03/08**	**07/24/08**
Cesium 137	-0.002	U	0.081	0.200	0.15	07/03/08	07/24/08
Cobalt 60	0.014	U	0.073		0.13	07/03/08	07/24/08
Europium 152	0.03	U	0.18		0.32	07/03/08	07/24/08
Europium 154	0.06	U	0.44		0.82	07/03/08	07/24/08
Lead 210	1.2	U	1.9	3.0	3.2	07/03/08	07/24/08
Lead 212	**2.43**		**0.30**		**0.19**	**07/03/08**	**07/24/08**
Lead 214	**1.95**		**0.27**		**0.24**	**07/03/08**	**07/24/08**
Potassium 40	**11.7**		**1.9**		**0.5**	**07/03/08**	**07/24/08**
Protactinium 234	-0.22	U	0.29		0.48	07/03/08	07/24/08
Radium (226)	**1.62**		**0.31**	1.00	**0.21**	**07/03/08**	**07/24/08**
Thallium 208	**0.79**		**0.15**		**0.11**	**07/03/08**	**07/24/08**
Thorium 232	**1.57**		**0.38**		**0.37**	**07/03/08**	**07/24/08**
Thorium 234	1.62	U	0.80		3.3	07/03/08	07/24/08
Uranium 235	-0.04	U	1.6		0.7	07/03/08	07/24/08

NOTE(S)

Data are incomplete without the case narrative.

MDC is determined by instrument performance only.
Bold results are greater than the MDC

U Result is less than the sample detection limit.

ATTACHMENT 7

ADDITIONAL LABORATORY COMPARISON RESULTS

(Values in red exceed the release criterion for that radionuclide of concern.)

This page intentionally left blank.

QA Analysis of Cs-137 and Ra-226 Results from HPS Laboratory and TA

Sample ID	On-site Laboratory						Off-site Laboratory (QA)						
	Count Time (min)	^{137}Cs			^{226}Ra			Count Time (min)	^{137}Cs			^{226}Ra		
		Activity	MDA	2σ Error	Activity	MDA	2σ Error		Activity	MDL	2σ Error	Activity	MDL	2σ Error
6PBFS-001-13	45	-0.069	0.045	-0.260	0.857	0.694	0.843	90	-0.004	0.017	0.021	0.488	0.367	0.458
6PBFS-002-59	45	-0.042	0.035	-1.609	0.960	0.744	0.891	90	-0.003	0.021	0.049	1.150	0.350	0.530
6PBFS-003-01	45	0.012	0.045	0.061	0.732	1.220	1.425	90	-0.022	0.035	0.097	1.411	0.551	0.827
6PBFS-004-15	90	0.005	0.036	0.038	1.114	0.839	1.009	90	-0.012	0.034	0.070	1.869	0.619	0.948
6PBFS-005-115	45	0.000	0.035	0.041	0.926	0.860	1.018	90	0.012	0.025	0.031	2.040	0.510	0.790
6PBFS-005-96	90	0.001	0.020	0.023	2.116	0.696	0.878	90	-0.010	0.029	0.063	2.160	0.650	0.840
6PBFS-006-10	45	0.031	0.046	0.053	1.217	0.915	1.094	90	0.028	0.022	0.030	1.880	0.520	0.740
6PBFS-007-17	90	-0.036	0.032	-0.281	1.028	0.849	0.985	90	-0.010	0.030	0.170	1.950	0.490	0.790
6PBFS-008-02	45	-0.012	0.050	-0.075	0.501	1.030	1.200	90	-0.025	0.034	0.118	1.539	0.573	1.000
6PBFS-009-12	45	0.035	0.046	0.053	1.286	1.120	1.285	90	0.004	0.023	0.028	0.340	0.540	0.680
6PBFS-010-31	90	0.005	0.043	0.049	1.488	0.807	0.976	90	-0.009	0.027	0.060	2.130	0.630	0.820
6PBFS-010-31_Dup								90	0.018	0.035	0.041	2.943	0.671	1.179
6PBFS-010-247	90	0.054	0.035	0.046	1.463	0.698	0.871	90	-0.020	0.030	0.140	2.480	0.530	0.800
6PBFS-011-04	45	-0.024	0.049	-0.151	1.242	0.861	1.040	90	-0.019	0.029	0.064	0.210	0.520	0.590
6PBFS-012-12	45	0.005	0.019	0.023	0.523	0.667	0.753	90	-0.030	0.030	0.260	0.630	0.424	0.572
6PBFS-013-29	45	-0.066	0.056	-0.117	1.370	1.020	1.229	90	-0.009	0.030	0.130	2.160	0.450	0.670
6PBFS-014-111	45	-0.005	0.034	-0.060	1.123	0.846	1.015	90	0.000	0.020	0.059	1.920	0.360	0.630
6PBFS-015-03	90	0.004	0.024	0.029	2.177	0.657	0.827	90	-0.007	0.035	0.053	0.440	0.669	0.811
6PBFS-015-124	45	-0.011	0.046	-0.090	0.710	1.380	1.600	90	0.001	0.026	0.031	3.830	0.577	0.979
6PBFS-016-07	45	-0.024	0.051	-0.109	1.479	0.928	1.126	90	0.000	0.027	0.032	2.350	0.540	0.800
6PBFS-017-77	45	-0.008	0.039	-0.057	0.836	1.360	1.574	90	-0.041	0.041	0.354	1.312	0.588	0.826
6PBFS-018-50	90	-0.001	0.022	-0.033	0.840	0.729	0.864	90	0.001	0.024	0.029	4.060	0.632	1.038
6PBFS-018-04	90	0.008	0.021	0.025	2.587	0.648	0.835	90	-0.007	0.026	0.032	2.119	0.647	0.867
6PBFS-019-27	45	0.010	0.018	0.022	0.177	0.654	0.710	90	0.024	0.023	0.032	2.537	0.562	0.996
6PBFS-020-41	45	-0.066	0.054	-0.590	-0.176	1.220	-1.558	90	-0.012	0.020	0.026	0.103	0.323	0.405
6PBFS-021-01	45	-0.049	0.036	-0.375	0.945	0.749	0.898	90	0.002	0.014	0.031	0.670	0.430	0.520
6PBFS-022-34	45	-0.031	0.028	-0.173	-0.526	1.120	-1.972	90	0.008	0.018	0.023	1.423	0.367	0.622
6PBFS-023-187	90	-0.045	0.034	-0.211	1.382	0.760	0.899	90	0.023	0.024	0.032	2.917	0.563	1.041
6PBFS-024-100	45	-0.061	0.044	-9.597	-0.004	0.935	-1.032	90	-0.003	0.019	0.023	1.190	0.370	0.560
6PBFS-025-14	45	0.036	0.032	0.043	0.229	0.908	0.997	90	-0.003	0.019	0.023	2.113	0.370	0.560
6PBFS-026-12	45	0.018	0.022	0.028	0.725	0.691	0.804	90	0.011	0.023	0.053	-0.050	0.400	2.300

QA Analysis of Cs-137 and Ra-226 Results from HPS Laboratory and TA

Sample ID	On-site Laboratory							Off-site Laboratory (QA)						
	Count Time (min)	^{137}Cs			^{226}Ra			Count Time (min)	^{137}Cs			^{226}Ra		
		Activity	MDA	2σ Error	Activity	MDA	2σ Error		Activity	MDL	2σ Error	Activity	MDL	2σ Error
6PBFS-027-16	45	-0.074	0.059	-0.526	-0.409	1.050	-1.780	90	0.001	0.028	0.034	1.760	0.400	0.712
6PBFS-028-12	45	-0.035	0.056	-0.162	0.503	1.000	1.138	90	-0.008	0.032	0.040	1.844	0.509	0.833
6PBFS-029-13	90	-0.015	0.042	-0.101	1.149	0.969	1.139	90	-0.030	0.040	0.140	2.780	0.620	0.920
6PBFS-030-17	45	-0.041	0.056	-0.185	-0.256	1.250	-1.720	90	-0.046	0.037	0.505	1.428	0.546	0.848
6PBFS-033-05	45	-0.020	0.056	-0.109	-1.092	1.120	-3.698	90	0.016	0.020	0.027	1.322	0.379	0.658
6PBFS-036-09	45	0.020	0.026	0.034	0.952	0.798	0.920	90	-0.001	0.017	0.021	1.680	0.416	0.664
6PBFS-036-09_Dup								90	0.000	0.027	0.032	0.270	0.476	0.597
6PBFS-037-54	90	-0.0363	0.032	149.140	1.083	0.702	0.840	90	0.000	0.027	0.033	1.609	0.631	0.833
6PBFS-037-54_Dup								90	-0.016	0.034	0.043	1.193	0.620	0.813
6PBFS-039-10	45	0.016	0.040	0.042	1.299	0.951	1.141	90	0.042	0.022	0.038	0.760	0.540	0.640
6PBFS-040-50	45	0.020	0.029	0.038	1.421	1.120	1.352	90	0.023	0.026	0.061	2.280	0.560	0.880
6PBFS-041-13	45	0.019	0.040	0.042	0.417	0.979	1.117	90	0.002	0.020	0.024	2.937	0.387	0.712
6PBFS-042-119	45	0.056	0.049	0.064	1.262	1.030	1.245	90	-0.008	0.017	0.038	0.930	0.600	0.720
6PBFS-043-115	90	0.018	0.035	0.042	1.057	0.833	1.000	90	-0.004	0.024	0.029	2.713	0.528	0.844
6PBFS-044-17	45	-0.048	0.044	-0.393	1.247	0.979	1.150	90	-0.002	0.027	0.032	0.657	0.584	0.736
6PBFS-045-152	90	0.000	0.021	0.025	1.012	0.775	0.914	90	-0.006	0.026	0.032	2.091	0.491	0.854
6PBFS-046-04	45	-0.028	0.029	-0.123	-0.073	0.957	-1.176	90	-0.001	0.027	0.033	1.708	0.395	0.668
6PBFS-047-74	45	-0.030	0.043	-0.337	1.080	0.756	0.996	90	-0.010	0.030	0.200	1.100	0.500	0.670
6PBFS-048-06	90	0.003	0.030	0.033	0.783	0.948	1.102	90	-0.005	0.026	0.032	1.445	0.582	0.788
6PBFS-049-310	45	0.007	0.043	0.044	1.217	0.823	0.987	90	-0.020	0.036	0.093	1.322	0.537	0.779
6PBFS-051-336	90	0.003	0.032	0.039	1.294	0.805	0.978	90	-0.028	0.034	0.167	1.658	0.564	0.849
6PBFS-052-60	45	-0.012	0.045	-0.103	1.334	1.100	1.293	90	-0.007	0.030	0.360	1.960	0.550	0.880
6PBFS-053-117	90	0.009	0.031	0.036	1.199	0.749	0.886	90	-0.017	0.031	0.081	0.531	0.569	0.698
6PBFS-054-162	45	-0.021	0.042	-0.104	1.243	1.010	1.189	90	0.002	0.023	0.029	1.829	0.400	0.733
6PBFS-054-162_Dup								90	0.013	0.019	0.025	1.725	0.501	0.789
6PBFS-056-93	45	0.008	0.023	0.028	1.035	0.851	1.000	90	0.021	0.033	0.042	4.871	0.618	1.132
6PBFS-057-139	45	0.041	0.046	0.056	1.330	1.070	1.268	90	-0.044	0.032	1.751	1.011	0.512	0.717
6PBFS-058-63	90	0.053	0.025	0.035	0.746	0.685	0.814	90	-0.002	0.022	0.027	1.169	0.426	0.659
6PBFS-059-48	45	-0.010	0.038	-0.076	1.175	0.987	1.174	90	0.025	0.028	0.036	2.315	0.556	0.905
6PBFS-060-92	45	0.021	0.041	0.044	0.925	0.751	0.921	90	-0.008	0.024	0.030	2.521	0.421	0.703
6PBFS-061-28	45	0.067	0.038	0.054	-0.160	1.100	-1.576	90	0.010	0.017	0.023	0.522	0.414	0.510

QA Analysis of Cs-137 and Ra-226 Results from HPS Laboratory and TA

Sample ID	Count Time (min)	On-site Laboratory						Off-site Laboratory (QA)						
		^{137}Cs			^{226}Ra			Count Time (min)	^{137}Cs			^{226}Ra		
		Activity	MDA	2σ Error	Activity	MDA	2σ Error		Activity	MDL	2σ Error	Activity	MDL	2σ Error
6PBFS-062-07	45	-0.043	0.049	-0.241	0.747	1.070	1.224	90	0.008	0.027	0.034	1.403	0.475	0.723
6PBFS-063-34	45	-0.061	0.046	-0.648	-0.352	1.310	-2.047	90	0.006	0.020	0.025	1.159	0.407	0.613
6PBFS-064-69	45	-0.068	0.035	-0.297	0.280	1.140	1.289	90	0.008	0.026	0.033	1.473	0.449	0.696
6PBFS-065-01	45	0.015	0.052	0.061	0.516	1.250	1.415	90	0.022	0.025	0.032	2.370	0.548	0.856

ATTACHMENT 8

RADIUM-226 AND BISMUTH-214 QA COMPARISON
(Values in red exceed the release criterion for that radionuclide of concern.)

This page intentionally left blank.

QA Analysis of HPS Lab Ra-226 and TA Bi-214 Results

Sample ID		On-site Laboratory			Off-site Laboratory (QA)			
	Count Time (min)	^{226}Ra			Count Time (min)	^{214}Bi		
		Activity	MDA	2σ Error		Activity	MDL	2σ Error
6PBFS-001-13	45	0.857	0.694	0.843	90	0.339	0.052	0.069
6PBFS-002-59	45	0.960	0.744	0.891	90	0.539	0.077	0.095
6PBFS-003-01	45	0.732	1.220	1.425	90	0.580	0.130	0.120
6PBFS-004-15	90	1.114	0.839	1.009	90	1.060	0.110	0.140
6PBFS-005-115	45	0.926	0.860	1.018	90	1.000	0.100	0.140
6PBFS-005-115					60	0.640	0.070	0.150
6PBFS-005-96	90	2.116	0.696	0.878	90	1.230	0.120	0.160
6PBFS-006-10	45	1.217	0.915	1.094	90	0.620	0.130	0.140
6PBFS-007-17	90	1.028	0.849	0.985	90	0.490	0.170	0.130
6PBFS-008-02	45	0.501	1.030	1.200	90	0.600	0.120	0.130
6PBFS-009-12	45	1.286	1.120	1.285	90	0.610	0.100	0.130
6PBFS-010-31	90	1.488	0.807	0.976	90	1.050	0.110	0.140
6PBFS-010-31_Dup					90	1.090	0.150	0.170
6PBFS-010-31					60	1.200	0.070	0.200
6PBFS-010-247	90	1.463	0.698	0.871	90	0.700	0.130	0.140
6PBFS-011-04	45	1.242	0.861	1.040	90	0.314	0.100	0.082
6PBFS-012-12	45	0.523	0.667	0.753	90	0.399	0.100	0.089
6PBFS-013-29	45	1.370	1.020	1.229	90	0.463	0.110	0.098
6PBFS-014-111	45	1.123	0.846	1.015	90	0.730	0.080	0.110
6PBFS-014-111					60	0.570	0.060	0.150
6PBFS-015-03	90	2.177	0.657	0.827	90	1.080	0.150	0.170
6PBFS-015-124	45	0.710	1.380	1.600	90	1.000	0.110	0.140
6PBFS-016-07	45	1.479	0.928	1.126	90	0.570	0.120	0.110
6PBFS-017-77	45	0.836	1.360	1.574	90	0.740	0.140	0.140
6PBFS-018-50	90	0.840	0.729	0.864	90	1.440	0.110	0.160
6PBFS-018-04	90	2.587	0.648	0.835	90	1.420	0.100	0.160
6PBFS-019-27	45	0.177	0.654	0.710	90	0.400	0.120	0.120
6PBFS-020-41	45	-0.176	1.220	-1.558	90	0.205	0.067	0.068
6PBFS-021-01	45	0.945	0.749	0.898	90	0.423	0.080	0.074
6PBFS-022-34	45	-0.526	1.120	-1.972	90	0.349	0.074	0.087
6PBFS-023-187	90	1.382	0.760	0.899	90	0.620	0.210	0.150
6PBFS-024-100	45	-0.004	0.935	-1.032	90	0.294	0.061	0.067
6PBFS-025-14	45	0.229	0.908	0.997	90	0.440	0.110	0.110
6PBFS-026-12	45	0.725	0.691	0.804	90	0.418	0.088	0.098
6PBFS-027-16	45	-0.409	1.050	-1.780	90	0.225	0.120	0.081
6PBFS-028-12	45	0.503	1.000	1.138	90	0.340	0.120	0.110
6PBFS-029-13	90	1.149	0.969	1.139	90	0.830	0.140	0.150
6PBFS-029-13					60	1.160	0.070	0.210
6PBFS-030-17	45	-0.256	1.250	-1.720	90	0.190	0.150	0.110
6PBFS-033-05	45	-1.092	1.120	-3.698	90	0.166	0.099	0.079
6PBFS-036-09	45	0.952	0.798	0.920	90	0.324	0.120	0.093
6PBFS-036-09_Dup					90	0.209	0.110	0.090
6PBFS-037-54	90	1.083	0.702	0.840	90	0.990	0.100	0.140
6PBFS-037-54_Dup					90	0.850	0.110	0.140
6PBFS-039-10	45	1.299	0.951	1.141	90	0.540	0.120	0.110

QA Analysis of HPS Lab Ra-226 and TA Bi-214 Results

Sample ID	Count Time (min)	On-site Laboratory			Off-site Laboratory (QA)			
		^{226}Ra			Count Time (min)	^{214}Bi		
		Activity	MDA	2σ Error		Activity	MDL	2σ Error
6PBFS-040-50	45	1.421	1.120	1.352	90	1.000	0.100	0.140
6PBFS-041-13	45	0.417	0.979	1.117	90	0.558	0.086	0.099
6PBFS-042-119	45	1.262	1.030	1.245	90	0.700	0.130	0.130
6PBFS-043-115	90	1.057	0.833	1.000	90	0.870	0.080	0.120
6PBFS-044-17	45	1.247	0.979	1.150	90	0.540	0.150	0.110
6PBFS-045-152	90	1.012	0.775	0.914	90	0.600	0.110	0.120
6PBFS-046-04	45	-0.073	0.957	-1.176	90	0.192	0.110	0.085
6PBFS-047-74	45	1.080	0.756	0.996	90	0.270	0.140	0.110
6PBFS-048-06	90	0.783	0.948	1.102	90	0.540	0.110	0.120
6PBFS-049-310	45	1.217	0.823	0.987	90	0.580	0.120	0.120
6PBFS-051-336	90	1.294	0.805	0.978	90	0.690	0.140	0.140
6PBFS-052-60	45	1.334	1.100	1.293	90	0.470	0.110	0.100
6PBFS-053-117	90	1.199	0.749	0.886	90	0.600	0.110	0.110
6PBFS-054-162	45	1.243	1.010	1.189	90	0.570	0.100	0.110
6PBFS-054-162_Dup					90	0.480	0.130	0.140
6PBFS-056-93	45	1.035	0.851	1.000	90	1.160	0.130	0.160
6PBFS-057-139	45	1.330	1.070	1.268	90	0.490	0.120	0.110
6PBFS-058-63	90	0.746	0.685	0.814	90	0.500	0.090	0.100
6PBFS-059-48	45	1.175	0.987	1.174	90	0.490	0.130	0.120
6PBFS-060-92	45	0.925	0.751	0.921	90	0.518	0.084	0.095
6PBFS-061-28	45	-0.160	1.100	-1.576	90	0.427	0.073	0.091
6PBFS-062-07	45	0.747	1.070	1.224	90	0.500	0.130	0.130
6PBFS-063-34	45	-0.352	1.310	-2.047	90	0.418	0.074	0.092
6PBFS-064-69	45	0.280	1.140	1.289	90	0.560	0.100	0.120
6PBFS-065-01	45	0.516	1.250	1.415	90	0.770	0.100	0.120

ATTACHMENT 9

OFF-SITE LABORATORY STANDARD SAMPLE RESULT USING BISMUTH-214

This page intentionally left blank.

TestAmerica

THE LEADER IN ENVIRONMENTAL TESTING

Analysis Report for Gamma Spectroscopy

Batch: M091273 **Operator:** 403293

SampID	WRKNO	Aliquot	Sigma	Instrument	Detector	CountDateTime	CountDuration
LCS_Ra226	NA	394.30g	2.00	GammaVision	GV07	3 / 24 / 09 22:37	90

Analyte	Cmpnd#	Activity		TotalUnc	CountUnc	MDA	MLCC	Act/MDA
BI-214	1505	2.590E+001	pCi/g	1.646E+000	5.462E-001	2.262E-001	1.098E-001	114.50
PB-214	1541	2.790E+001	pCi/g	2.194E+000	5.160E-001	2.685E-001	1.317E-001	103.89
RA-226	578	2.590E+001	pCi/g	1.646E+000	5.462E-001	2.262E-001	1.098E-001	114.50

Laboratory Control Sample Information

Sample ID	WRKNO	Analyte	Activity	StdAdded	Recovery

Sample Duplicate Information

Sample ID	Dup Sample ID	Analyte	Samp Activity	Dup Activity	RPD	RER	DER	Flag

Bi-214 ⇒ $\frac{25.90}{30} = 86.3\%$

Pb-214 ⇒ $\frac{27.9}{30} = 93\%$

APPENDIX B

PIPE AND MANHOLE RADIOLOGICAL SURVEY RESULTS
(on CD only)

This page intentionally left blank.

RADIATION/CONTAMINATION SURVEY FORM

Date: 8/11/2010	Time: 14:40	INSTRUMENTATION USED						
		Model Inst/Det.	Serial Number	Calibration Due Date	Instrument % Efficiency	Total % Efficiency	MDC/MDA + (dpm/100cm2)	Background + (dpm/100cm2)
Survey Number: HPS-PEPIPE-081110-003		2360	193676	3/1/2011	α 41.40%	α 10.35%	α 33.35	α 5.75
		43-93	208610		βγ 40.30%	βγ 10.08%	βγ 283.63	βγ 866.52
Location: Parcel E		Protean	0515058	8/17/2010	α 59.79%	α 14.95%	α 0.59	α 0.27
					βγ 61.78%	βγ 15.45%	βγ 15.88	βγ 2.91
Surveyor: C. Bell								
Surveyor Signature: C. Bell		2350-1	120636	3/2/2011				5.12
		44-10	192589					Kcpm
Isotopes of Concern: Ra-226; Cs-137; Sr-90		Static Count Time: 2 Minutes (2360)						
		Description: Parcel E/UC3 Pipe						

Pipe	Smear Number	Pipe	Smear Number
03-E16-00-1A-01	1,2		
03-E16-00-8M-01	3,4		

Comments

1) Accessible component surfaces (identified above by "Pipe" [Section ID] and "Smear Number") received preliminary LAW's followed by a detailed sample (scan and static survey) using Ludlum Meter/Dectector Models "2350-1 w/ 44-10" and "2360 w/ 43-68" or equivalent.
2) In addition to sample (survey) results documented within, LAW's did not indicate the presence of loose surface contaminants (α β γ).
3) Material surfaces corresponding to survey results within will be left intact as part of operationally active systems, componets, and/or structures. ☒ YES ☐ NO

Legend

K = Thousands
LAW = Large Area Swipe

RADIATION/CONTAMINATION SURVEY SUPPLEMENT

SURVEY NUMBER: HPS-PEPIPE-081110-003

SURVEYOR: C. Bell

LOCATION: Parcel E

Sample Number	Exposure Rate (µR/hr)		Fixed + Removable (NET)			Removable (NET)		Sample ID
	Contact	1 Meter	Gamma (cpm)	Alpha dpm/100cm2	Beta/Gamma dpm/100cm2	Alpha dpm/100cm2	Beta/Gamma dpm/100cm2	
1			5650	0.00	98.47	-0.27	7.88	
2			5422	7.67	39.39	1.96	1.40	
3			5634	7.67	94.53	-0.27	-0.76	
4			6055	-3.83	177.34	-0.27	5.72	

Reviewer: [illegible]

Investigation levels defined within are within limiting values as defined in the Hunter Point Naval Shipyard Radiological Work Plan Emergency exceed - 8-30-10

ED_006787_00017608-00500

COPY

SMEAR COUNTING ANALYSIS REPORT

COUNT DATE:	08/12/10	ANALYSIS PERFORMED BY:	E. Schrader
NWTS#:	HPS-PEPIPE-081110-003		
INSTRUMENT I.D.:	Protean WPC 9550	DETECTOR I.D.:	0815068
EFFICIENCIES: α:	14.93%	MDA: α:	9.60 dpm Cal Due Date: 7/9/2011
βγ:	15.89%	βγ:	18.44 dpm
SMEARS COLLECTED BY:	C. Bell		
SAMPLE COUNT TIME:	3 Minutes	ACTIVITY REPORT IN:	dpm/100cm²
α BACKGROUND:	0.04 CPM	βγ BACKGROUND:	0.45 CPM

Remarks: Pipe Survey Parcel E

	GROSS COUNTS		NET COUNTS		NET ACTIVITY	
	α	βγ	α	βγ	α	βγ
Smear #1	0	5	-0.04	1.22	-0.27	7.66
Smear #2	1	2	0.29	0.22	1.98	1.36
Smear #3	0	1	-0.04	-0.12	-0.27	-0.73
Smear #4	0	4	-0.04	0.88	-0.27	5.56

Remarks:

Reviewed by: R. Flutty Date: 8/25/10

NEW WORLD TECHNOLOGY FORM NWT-006 v2

RADIATION/CONTAMINATION SURVEY FORM

Date: 8/12/2010	Time: 13:22	INSTRUMENTATION USED						
		Model Inst/Det.	Serial Number	Calibration Due Date	Instrument % Efficiency	Total % Efficiency	MDC/MDA + (dpm/100cm2)	Background + (dpm/100cm2)
Survey Number: HPS-PEPIPE-081210-004		2360	193676	3/1/2011	α 41.40%	α 10.35%	α 37.04	α 7.86
		43-93	268610		βγ 40.30%	βγ 10.08%	βγ 200.80	βγ 912.80
Location: Parcel E		Prolean	0515068	8/17/2010	α 58.79%	α 14.95%	α 9.59	α 0.27
					βγ 61.78%	βγ 15.45%	βγ 15.88	βγ 2.91
Surveyor: C. Bell								
Surveyor Signature: C. Bell		2350-1	120636	3/2/2011				5.1
		44-10	192589					Kcpm
Isotopes of Concern:: Ra-226; Cs-137; Sr-90		Static Count Time: 2 Minutes (2360)						
		Description: Parcel E/UC3 Pipe						

Pipe	Smear Number	Pipe	Smear Number
03-E16-74-3J-01	1,2		

Comments

1) Accessible component surfaces (identifed above by "Pipe" [Section ID] and "Smear Number") received preliminary LAW's followed by a detailed sample (scan and static survey) using Ludlum Meter/Dectector Models "2350-1 w/ 44-10" and "2360 w/ 43-68" or equivalent.
2) In addition to sample (survey) results documented within, LAWs did not indicate the presence of loose surface contaminants (α β γ).
3) Material surfaces corresponding to survey results within will be left intact as part of operationally active systems, componets, and/or structures. ☒ YES ☐ NO

Legend

K = Thousands
LAW = Large Area wipe

RADIATION/CONTAMINATION SURVEY SUPPLEMENT

SURVEY NUMBER: HPS-PEPIPE-081210-004

SURVEYOR: C. Bell | LOCATION: Parcel E

Sample Number	Exposure Rate (µ R/hr)		Fixed + Removable (NET)			Removable (NET)		Sample ID
	Contact	1 Meter	Gamma (cpm)	Alpha dpm/100cm2	Beta/Gamma dpm/100cm2	Alpha dpm/100cm2	Beta/Gamma dpm/100cm2	
1			5327	-4.22	147.70	1.96	-0.76	
2			5418	3.45	833.04	-0.27	3.56	

Reviewer: [illegible] Survey location as defined within K-8 within limiting values as defined in the Human Risk Because Radiological was Non-Radiologically cleared - 8-30-10

COPY

SMEAR COUNTING ANALYSIS REPORT

COUNT DATE:	08/12/10	ANALYSIS PERFORMED BY:	A. Alexander
NWTS#:	HPS-PEPIPE-081210-004		
INSTRUMENT I.D.:	Protean WPC 9550	DETECTOR I.D.:	0615038
EFFICIENCIES: α:	14.93%	MDA: α:	9.60 dpm Cal Due Date: 7/9/2011
βγ:	15.89%	βγ:	15.44 dpm
SMEARS COLLECTED BY:	C. Bell		
SAMPLE COUNT TIME:	3 Minutes	ACTIVITY REPORT IN:	dpm/100cm²
α BACKGROUND:	0.04 CPM	βγ BACKGROUND:	0.46 CPM

Remarks: Pipe Survey Parcel E Crisp WA-15, 03-E16-74-35	GROSS COUNTS		NET COUNTS		NET ACTIVITY	
	α	βγ	α	βγ	α	βγ
Smear #1	1	1	0.29	-0.12	1.66	-0.73
Smear #2	0	3	-0.04	0.55	-0.27	3.46

Remarks:

Reviewed by: R. Flaty Date: 8/25/10

NEW WORLD TECHNOLOGY FORM NWT-008 v2

RADIATION/CONTAMINATION SURVEY FORM

Date: 8/16/2010	Time: 12:50	INSTRUMENTATION USED						
		Model Inst/Det.	Serial Number	Calibration Due Date	Instrument % Efficiency	Total % Efficiency	MDC/MDA + (dpm/100cm2)	Background + (dpm/100cm2)
Survey Number: HPS-PEPIPE-081610-005		2360	193680	3/4/2011	α 35.70%	α 8.93%	α 36.00	α 5.34
		43-68	075150		βγ 38.00%	βγ 9.00%	βγ 176.98	βγ 280.88
Location: Parcel E		Protean	0815068	8/17/2010	α 69.79%	α 14.95%	α 10.52	α 0.47
					βγ 61.78%	βγ 15.45%	βγ 16.09	βγ 3.04
Surveyor: C. Bell								
Surveyor Signature: C. Bell		2350-1	120636	3/2/2011				5.1
		44-10	192589					Kcpm
Isotopes of Concern:: Ra-226; Cs-137; Sr-90		Static Count Time: 2 Minutes (2360)						
		Description: Parcel E/UC3 Manhole						

Pipe	Smear Number	Pipe	Smear Number
03-E16-00-1D-MH502	1,2		

Comments

1) Accessible component surfaces (identifed above by "Pipe" [Section ID] and "Smear Number") received preliminary LAW's followed by a detailed sample (scan and static survey) using Ludlum Meter/Dectector Models "2350-1 w/ 44-10" and "2360 w/ 43-68" or equivalent.
2) In addition to sample (survey) results documented within, LAW's did not indicate the presence of loose surface contaminants (α β γ).
3) Material surfaces corresponding to survey results within will be left intact as part of operationally active systems, componets, and/or structures. ☒ YES ☐ NO

Legend

K = Thousands
LAW = Large Area Wipe

RADIATION/CONTAMINATION SURVEY SUPPLEMENT

SURVEY NUMBER: HPS-PEPIPE-081610-005

SURVEYOR: C. Bell | LOCATION: Parcel E

Sample Number	Exposure Rate (µR/hr)		Fixed + Removable (NET)			Removable (NET)		Sample ID
	Contact	1 Meter	Gamma (cpm)	Alpha dpm/100cm2	Beta/Gamma dpm/100cm2	Alpha dpm/100cm2	Beta/Gamma dpm/100cm2	
1			5838	-6.22	183.42	-0.47	5.59	
2			6222	7.11	293.65	-0.47	3.43	

Reviewer: Survey results as defined within are within limits waived as defined in the HPS Oakwood Radiological Work Plan for Emergency release — 8-30-10

SMEAR COUNTING ANALYSIS REPORT

ORIGINAL

COUNT DATE:	08/16/10	ANALYSIS PERFORMED BY:	C. Alexander
NWTS#:	HPS-PEPIPE-081610-005		
INSTRUMENT I.D.:	Protean WPC 9550	DETECTOR I.D.:	0615068
EFFICIENCIES: α:	14.93%	MDA: α: 10.54 dpm	Cal Due Date: 7/8/2011
βγ:	15.89%	βγ: 15.64 dpm	
SMEARS COLLECTED BY:	C. Bell		
SAMPLE COUNT TIME:	3 Minutes	ACTIVITY REPORT IN:	dpm/100cm²
α BACKGROUND:	0.07 CPM	βγ BACKGROUND:	0.47 CPM

Remarks: Pipe Survey Parcel E WA-16, CRISP, MH 502

	GROSS COUNTS		NET COUNTS		NET ACTIVITY	
	α	βγ	α	βγ	α	βγ
Smear #1	0	4	-0.07	0.86	-0.47	5.43
Smear #2	0	3	-0.07	0.53	-0.47	3.34

Remarks:

Reviewed by: [signature] Date: 8/17/10

NEW WORLD TECHNOLOGY FORM NWT-006 v2

RADIATION/CONTAMINATION SURVEY FORM

Date: 8/18/2010	Time: 15:50	INSTRUMENTATION USED						
		Model Inst/Det.	Serial Number	Calibration Due Date	Instrument % Efficiency	Total % Efficiency	MDC/MDA + (dpm/100cm2)	Background + (dpm/100cm2)
Survey Number: HPS-PEPIPE-081810-005		2360	193680	3/4/2011	α 35.70%	α 8.93%	α 30.02	α 2.89
		43-68	075150		βγ 36.00%	βγ 9.00%	βγ 175.54	βγ 276.01
Location: Parcel E		Protean	0615058	8/17/2010	α 59.79%	α 14.95%	α 11.27	α 0.87
					βγ 61.78%	βγ 15.45%	βγ 15.58	βγ 2.72
Surveyor: C. Bell								
Surveyor Signature: C.D. Bell		2350-1	120636	3/2/2011				6.68
		44-10	192589					Kcpm
Isotopes of Concern:: Ra-228; Cs-137; Sr-90		Static Count Time: 2 Minutes (2360)						
		Description: Parcel E/UC3 Pipe						

Pipe	Smear Number	Pipe	Smear Number
03-E16-00-1E-01	1,2		

Comments

1) Accessible component surfaces (identified above by "Pipe" [Section ID] and "Smear Number") received preliminary LAWs followed by a detailed sample (scan and static survey) using Ludlum Meter/Declector Models "2350-1 w/ 44-10" and "2360 w/ 43-68" or equivalent.
2) In addition to sample (survey) results documented within, LAWs did not indicate the presence of loose surface contaminants (α β γ).
3) Material surfaces corresponding to survey results within will be left intact as part of operationally active systems, components, and/or structures. ☒ YES ☐ NO

Legend

K = Thousands
LAW = Large Area Wipe

RADIATION/CONTAMINATION SURVEY SUPPLEMENT

SURVEY NUMBER: HPS-PEPIPE-081810-006

SURVEYOR: C. Bell

LOCATION: Parcel E

Sample Number	Exposure Rate (µR/hr)		Fixed + Removable (NET)			Removable (NET)		Sample ID
	Contact	1 Meter	Gamma (cpm)	Alpha dpm/100cm2	Beta/Gamma dpm/100cm2	Alpha dpm/100cm2	Beta/Gamma dpm/100cm2	
1			6221	12.00	171.08	-0.67	14.55	
2			7263	7.56	188.71	-0.67	1.60	

Reviewer: [illegible]

Survey location as defined within the within limits as defined in the HPS Remedial Radiological Work Plan

Radiologically cleared - 8-30-10

SMEAR COUNTING ANALYSIS REPORT

ORIGINAL

COUNT DATE:	08/18/10	ANALYSIS PERFORMED BY:	A. Alexander
NWTS#:	HPS-PEPIPE-081810-008		
INSTRUMENT I.D.:	Protean WPC 9550	DETECTOR I.D.:	0815068
EFFICIENCIES: α:	14.93%	MDA: α:	11.29 dpm Cal Due Date: 7/9/2011
βγ:	15.89%	βγ:	15.13 dpm
SMEARS COLLECTED BY:	C. Bell		
SAMPLE COUNT TIME:	3 Minutes	ACTIVITY REPORT IN:	dpm/100cm²
α BACKGROUND:	0.1 CPM	βγ BACKGROUND:	0.42 CPM

Remarks: Pipe Survey Parcel E 03-E16-00-1E. COC#SW00428	GROSS COUNTS		NET COUNTS		NET ACTIVITY	
	α	βγ	α	βγ	α	βγ
Smear #1	0	8	-0.10	2.25	-0.67	14.14
Smear #2	0	2	-0.10	0.25	-0.67	1.55

Remarks:

Reviewed by: [signature] Date: 8/18/10

RADIATION/CONTAMINATION SURVEY FORM

Date: 8/19/2010	Time: 15:45	INSTRUMENTATION USED						
		Model Inst/Det.	Serial Number	Calibration Due Date	Instrument % Efficiency	Total % Efficiency	MDC/MDA + (dpm/100cm2)	Background + (dpm/100cm2)
Survey Number: HPS-PEPIPE-081910-007		2360 43-68	193680 075150	3/4/2011	α 35.70% βγ 36.00%	α 8.93% βγ 9.00%	α 37.82 βγ 189.34	α 6.22 βγ 324.96
Location: Parcel E		Protean	0615068	8/17/2010	α 59.79% βγ 61.78%	α 14.95% βγ 15.45%	α 11.27 βγ 16.87	α 0.67 βγ 3.56
Surveyor: C. Bell								
Surveyor Signature:		2350-1 44-10	120636 192689	3/2/2011				5.41 Kcpm
Isotopes of Concern: Ra-226; Cs-137; Sr-90		Static Count Time: 2 Minutes (2360)						
		Description: Parcel E/UC3 Pipe						

Pipe	Smear Number	Pipe	Smear Number
03-E16-00-1G-01	1,2		
03-E16-00-1J-01	3,4		

Comments

1) Accessible component surfaces (identifed above by "Pipe" [Section ID] and "Smear Number") received preliminary LAW's followed by a detailed sample (scan and static survey) using Ludlum Meter/Dectector Models "2350-1 w/ 44-10" and "2360 w/ 43-68" or equivalent.
2) In addition to sample (survey) results documented within, LAW's did not indicate the presence of loose surface contaminants (α β γ).
3) Material surfaces corresponding to survey results within will be left intact as part of operationally active systems, componets, and/or structures. ☒ YES ☐ NO

Legend

K = Thousands
LAW = Large Area Wipe

RADIATION/CONTAMINATION SURVEY SUPPLEMENT

SURVEY NUMBER: HPS-PEPIPE-081910-007

SURVEYOR: C. Bell

LOCATION: Parcel E

Sample Number	Exposure Rate (μ R/hr)		Fixed + Removable (NET)			Removable (NET)		Sample ID
	Contact	1 Meter	Gamma (cpm)	Alpha dpm/100cm2	Beta/Gamma dpm/100cm2	Alpha dpm/100cm2	Beta/Gamma dpm/100cm2	
1			5987	0.89	77.60	-0.67	9.39	
2			6358	-8.00	179.01	3.79	-1.40	
3			5656	0.89	183.42	-0.67	7.23	
4			6384	0.89	271.60	-0.67	-1.40	

Reviewer: Survey locations as defined within are within limiting values as defined in the HPS Briefing Enhancing Work Plan Radiological Control 8-30-10

SMEAR COUNTING ANALYSIS REPORT

ORIGINAL

COUNT DATE:	08/20/10	ANALYSIS PERFORMED BY:	C. Fluty
NWTS#:	HPS-PEPIPE-081910-007		
INSTRUMENT I.D.:	Protean WPC 9550	DETECTOR I.D.:	0815068
EFFICIENCIES: α:	14.93%	MDA: α: 11.29 dpm	Cal Due Date: 7/9/2011
βγ:	15.80%	βγ: 16.40 dpm	
SMEARS COLLECTED BY:	C. Bell		
SAMPLE COUNT TIME:	3 Minutes	ACTIVITY REPORT IN:	dpm/100cm²
α BACKGROUND:	0.1 CPM	βγ BACKGROUND:	0.55 CPM

Remarks: Pipe Survey Parcel E WA-16 (Crisp) Pipe 1J and 1G

	GROSS COUNTS		NET COUNTS		NET ACTIVITY	
	α	βγ	α	βγ	α	βγ
Smear #1	0	6	-0.10	1.46	-0.67	9.13
Smear #2	2	1	0.57	-0.22	3.80	-1.36
Smear #3	0	5	-0.10	1.12	-0.67	7.03
Smear #4	0	1	-0.10	-0.22	-0.67	-1.36

Remarks:

Reviewed by: R. Fluty

Date: 8/20/10

NEW WORLD TECHNOLOGY FORM NWT-006 v2

RADIATION/CONTAMINATION SURVEY FORM

Date: 8/23/2010	Time: 9:30	INSTRUMENTATION USED						
		Model Inst/Det.	Serial Number	Calibration Due Date	Instrument % Efficiency	Total % Efficiency	MDC/MDA ÷ (dpm/100cm2)	Background ÷ (dpm/100cm2)
Survey Number: HPS-PEPIPE-082310-008		2350 43-68	193680 075150	3/4/2011	α 35.70% βγ 36.00%	α 8.93% βγ 9.00%	α 27.97 βγ 174.96	α 2.22 βγ 274.03
Location: Parcel E		Protean	0815068	8/17/2010	α 59.79% βγ 61.78%	α 14.95% βγ 15.45%	α 9.93 βγ 17.95	α 0.33 βγ 4.34
Surveyor: C. Bell								
Surveyor Signature:		2350-1 44-10	120636 192589	3/2/2011				5.31 Kcpm
Isotopes of Concern:: Ra-226; Cs-137; Sr-90		Static Count Time: 2 Minutes (2360)						
		Description: Parcel E/UC3 Pipe						

Pipe	Smear Number	Pipe	Smear Number
03-E16-00-1J-02	1,2		

Comments

1) Accessible component surfaces (identifed above by "Pipe" [Section ID] and "Smear Number") received preliminary LAW's followed by a detailed sample (scan and static survey) using Ludlum Meter/Dectector Models "2350-1 w/ 44-10" and "2360 w/ 43-68" or equivalent.
2) In addition to sample (survey) results documented within, LAW's did not indicate the presence of loose surface contaminants (α β γ).
3) Material surfaces corresponding to survey results within will be left intact as part of operationally active systems, componets, and/or structures. ☒ YES ☐ NO

Legend

K = Thousands
LAW = Large Area wipe

RADIATION/CONTAMINATION SURVEY SUPPLEMENT

SURVEY NUMBER: HPS-PEPIPE-082310-008

SURVEYOR: C. Bell

LOCATION: Parcel E

Sample Number	Exposure Rate (µR/hr)		Fixed + Removable (NET)			Removable (NET)		Sample ID
	Contact	1 Meter	Gamma (cpm)	Alpha dpm/100cm2	Beta/Gamma dpm/100cm2	Alpha dpm/100cm2	Beta/Gamma dpm/100cm2	
1			5600	22.23	113.32	-0.33	-2.18	
2			4641	13.34	294.09	-0.33	8.61	

Reviewer: [illegible]

Survey location as defined within are within limiting values as defined in the HPS Decommissioning Work Plan — Radiologically cleared — 8-30-10

SMEAR COUNTING ANALYSIS REPORT

ORIGINAL

COUNT DATE:	08/23/10	ANALYSIS PERFORMED BY:	I. Tapelu
NWTS#:	HPS-PEPIPE-082310-008		
INSTRUMENT I.D.:	Protean WPC 9550	DETECTOR I.D.:	0615008
EFFICIENCIES: α:	14.93%	MDA: α:	9.94 dpm Cal Due Date: 7/9/2011
βγ:	15.89%	βγ:	17.45 dpm
SMEARS COLLECTED BY:	C. Bell		
SAMPLE COUNT TIME:	3 Minutes	ACTIVITY REPORT IN:	dpm/100cm²
α BACKGROUND:	0.05 CPM	βγ BACKGROUND:	0.67 CPM

Remarks: Pipe Survey Parcel E wa 16, crisp	GROSS COUNTS		NET COUNTS		NET ACTIVITY	
	α	βγ	α	βγ	α	βγ
Smear #1	0	1	-0.05	-0.34	-0.33	-2.12
Smear #2	0	6	-0.05	1.33	-0.33	8.37

Remarks:

Reviewed by: [signature] Date: 8/24/10

NEW WORLD TECHNOLOGY FORM NWT-006 v2

RADIATION/CONTAMINATION SURVEY FORM

Date: 8/26/2010	Time: 10:15	INSTRUMENTATION USED						
		Model Inst/Det.	Serial Number	Calibration Due Date	Instrument % Efficiency	Total % Efficiency	MDC/MDA ÷ (dpm/100cm2)	Background ÷ (dpm/100cm2)
Survey Number: HPS-PEPIPE-082610-009		2360 43-68	193680 075150	3/4/2011	α 35.70% βγ 36.00%	α 8.83% βγ 9.00%	α 32.41 βγ 194.24	α 3.78 βγ 343.25
Location: Parcel E		Protean	0615088	8/17/2010	α 59.79% βγ 61.78%	α 14.95% βγ 15.45%	α 12.11 βγ 16.78	α 0.94 βγ 3.50
Surveyor: J. Rolfe								
Surveyor Signature:		2350-1 44-10	98617 211667	10/30/2010				4.57 Kcpm
Isotopes of Concern:: Ra-226; Cs-137; Sr-90		Static Count Time: 2 Minutes (2360)						
		Description: Parcel E/UC3 Pipe						

Pipe	Smear Number	Pipe	Smear Number
03-E16-00-8M-02	1,2		
03-E16-00-8M-03	3,4		
03-E16-00-8M-04	5,6		
03-E16-00-8M-05	7,8		
03-E16-00-8M-06	9,10		
03-E16-00-8M-07	11,12		
03-E16-00-8M-08	13,14		
03-E16-00-8M-09	15,16		
03-E16-00-8M-10	17,18		
03-E16-00-8M-11	19,20		
03-E16-00-8M-12	21,22		
03-E16-00-8M-13	23,24		
03-E16-00-8M-14	25,26		
03-E16-00-8M-15	27,28		
03-E16-00-8M-16	29,30		
03-E16-00-8M-17	31,32		

Comments

1) Accessible component surfaces (identifed above by "Pipe" [Section ID] and "Smear Number") received preliminary LAWs followed by a detailed sample (scan and static survey) using Ludlum Meter/Dectector Models "2350-1 w/ 44-10" and "2360 w/ 43-68" or equivalent.
2) In addition to sample (survey) results documented within, LAWs did not indicate the presence of loose surface contaminants (α β γ).
3) Material surfaces corresponding to survey results within will be left intact as part of operationally active systems, componets, and/or structures. ☐ YES ☒ NO

Legend

K = Thousands
LAW = Large Area Wipe

RADIATION/CONTAMINATION SURVEY SUPPLEMENT

SURVEY NUMBER: HPS-PEPIPE-082610-009

SURVEYOR: J. Rolfe | LOCATION: Parcel E

Sample Number	Exposure Rate (µR/hr) Contact	Exposure Rate (µR/hr) 1 Meter	Fixed + Removable (NET) Gamma (cpm)	Fixed + Removable (NET) Alpha dpm/100cm2	Fixed + Removable (NET) Beta/Gamma dpm/100cm2	Removable (NET) Alpha dpm/100cm2	Removable (NET) Beta/Gamma dpm/100cm2	Sample ID
1			3275	14.67	-47.18	-0.94	11.61	
2			3821	19.12	-214.73	-0.94	7.29	
3			3857	19.12	107.14	-0.94	9.45	
4			3903	-7.56	-286.27	-0.94	9.45	
5			3143	19.12	332.01	-0.94	9.45	
6			3347	23.56	-126.54	-0.94	0.82	
7			3085	10.23	146.83	-0.94	0.82	
8			3658	-7.56	-311.73	1.29	2.98	
9			3415	-3.11	80.69	-0.94	-1.34	
10			3261	5.78	-294.09	-0.94	2.98	
11			3361	10.23	76.28	-0.94	0.82	
12			3419	5.78	-232.36	-0.94	2.98	
13			3399	-7.56	221.78	-0.94	0.82	
14			3211	1.33	-192.68	-0.94	-3.50	
15			3310	14.67	327.60	-0.94	-1.34	
16			3132	-7.56	-272.05	-0.94	5.14	
17			3179	1.33	80.69	-0.94	0.82	
18			3040	1.33	-316.14	-0.94	-3.50	
19			3268	-3.11	217.37	-0.94	7.29	
20			3162	46.80	-148.59	-0.94	5.14	
21			3081	19.12	393.74	-0.94	0.82	
22			3137	5.78	-298.50	-0.94	0.82	
23			3183	1.33	173.28	3.52	5.14	
24			3281	1.33	-320.55	-0.94	11.61	
25			3241	10.23	217.37	1.29	2.98	
26			3420	1.33	-302.91	1.29	5.14	
27			3109	14.67	102.73	3.52	7.29	
28			3439	14.67	-126.54	-0.94	7.29	
29			3092	10.23	120.37	1.29	2.98	
30			3332	-7.56	-223.54	-0.94	11.61	
31			3224	32.46	265.87	-0.94	2.98	
32			3118	1.33	-117.72	-0.94	-1.34	

Reviewer: JHA

Survey locations as defined within are within limiting values as defined in the HPS Operable Radiological Control Plan Emergency Events & Conditions 8-30-10

SMEAR COUNTING ANALYSIS REPORT

COUNT DATE:	08/26/10	ANALYSIS PERFORMED BY:	A. Alexander
NWTS#:	HPS-PEPIPE-082610-009		
INSTRUMENT I.D.:	Protean WPC 9550	DETECTOR I.D.:	0815068
EFFICIENCIES: α:	14.93%	MDA: α: 12.13 dpm	Cal Due Date: 7/9/2011
βγ:	15.89%	βγ: 16.31 dpm	
SMEARS COLLECTED BY:	J. Rolfe		
SAMPLE COUNT TIME:	3 Minutes	ACTIVITY REPORT IN:	dpm/100cm²
α BACKGROUND:	0.14 CPM	βγ BACKGROUND:	0.54 CPM

Remarks: Pipe Survey Parcel E SW00431/SW00432/SW00433	GROSS COUNTS		NET COUNTS		NET ACTIVITY	
	α	βγ	α	βγ	α	βγ
Smear #1	0	7	-0.14	1.79	-0.94	11.29
Smear #2	0	5	-0.14	1.13	-0.94	7.09
Smear #3	0	6	-0.14	1.46	-0.94	9.19
Smear #4	0	6	-0.14	1.46	-0.94	9.19
Smear #5	0	6	-0.14	1.46	-0.94	9.19
Smear #6	0	2	-0.14	0.13	-0.94	0.80
Smear #7	0	2	-0.14	0.13	-0.94	0.80
Smear #8	1	3	0.19	0.46	1.29	2.90
Smear #9	0	1	-0.14	-0.21	-0.94	-1.30
Smear #10	0	3	-0.14	0.46	-0.94	2.90
Smear #11	0	2	-0.14	0.13	-0.94	0.80
Smear #12	0	3	-0.14	0.46	-0.94	2.90
Smear #13	0	2	-0.14	0.13	-0.94	0.80
Smear #14	0	0	-0.14	-0.54	-0.94	-3.40
Smear #15	0	1	-0.14	-0.21	-0.94	-1.30
Smear #16	0	4	-0.14	0.79	-0.94	4.99
Smear #17	0	2	-0.14	0.13	-0.94	0.80
Smear #18	0	0	-0.14	-0.54	-0.94	-3.40
Smear #19	0	5	-0.14	1.13	-0.94	7.09
Smear #20	0	4	-0.14	0.79	-0.94	4.99
Smear #21	0	2	-0.14	0.13	-0.94	0.80
Smear #22	0	2	-0.14	0.13	-0.94	0.80
Smear #23	2	4	0.53	0.79	3.53	4.99
Smear #24	0	7	-0.14	1.79	-0.94	11.29
Smear #25	1	3	0.19	0.46	1.29	2.90
Smear #26	1	4	0.19	0.79	1.29	4.99
Smear #27	2	5	0.53	1.13	3.53	7.09
Smear #28	0	5	-0.14	1.13	-0.94	7.09
Smear #29	1	3	0.19	0.46	1.29	2.90
Smear #30	0	7	-0.14	1.79	-0.94	11.29
Smear #31	0	3	-0.14	0.46	-0.94	2.90
Smear #32	0	1	-0.14	-0.21	-0.94	-1.30

Remarks:

Reviewed by: [signature] Date: 8/29/10

NEW WORLD TECHNOLOGY FORM NWT-006 v2

RADIATION/CONTAMINATION SURVEY FORM

Date: 8/27/2010	Time: 9:25	INSTRUMENTATION USED						
		Model Inst/Det.	Serial Number	Calibration Due Date	Instrument % Efficiency	Total % Efficiency	MDC/MDA ÷ (dpm/100cm2)	Background ÷ (dpm/100cm2)
Survey Number: HPS-PEPIPE-062710-010		2360	193680	3/4/2011	α 35.70%	α 8.93%	α 32.96	α 4.00
		43-68	075150		βγ 36.00%	βγ 9.00%	βγ 190.83	βγ 330.47
Location: Parcel E		Protean	0615068	8/17/2010	α 59.79%	α 14.95%	α 10.52	α 0.47
					βγ 61.78%	βγ 15.45%	βγ 15.98	βγ 2.98
Surveyor: R. Zahensky								
Surveyor Signature:		2350-1	98617	10/30/2010				5
		44-10	211667					Kcpm
Isotopes of Concern:: Ra-226; Cs-137; Sr-90		Static Count Time: 2 Minutes (2360)						
		Description: Parcel E/UC3 Pipe						

Pipe	Smear Number	Pipe	Smear Number
03-E16-00-8M-18	1,2		
03-E16-00-8M-19	3,4		
03-E16-00-8M-20	5,6		
03-E16-00-8M-21	7,8		
03-E16-00-8M-22	9,10		
03-E16-00-8M-23	11,12		
03-E16-00-8M-24	13,14		
03-E16-00-8M-25	15,16		
03-E16-00-8M-26	17,18		
03-E16-00-8M-27	19,20		
03-E16-00-8M-28	21,22		
03-E16-00-8M-29	23,24		
03-E16-00-8M-30	25,26		

Comments

1) Accessible component surfaces (identified above by "Pipe" (Section ID) and "Smear Number") received preliminary LAWs followed by a detailed sample (scan and static survey) using Ludlum Meter/Dectector Models "2350-1 w/ 44-10" and "2360 w/ 43-68" or equivalent.
2) In addition to sample (survey) results documented within, LAWs did not indicate the presence of loose surface contaminants (α β γ).
3) Material surfaces corresponding to survey results within will be left intact as part of operationally active systems, componets, and/or structures. ☐ YES ☒ NO

Legend

K = Thousands
LAW = Large Area Wipe

RADIATION/CONTAMINATION SURVEY SUPPLEMENT

SURVEY NUMBER: HPS-PEPIPE-082710-010

SURVEYOR: R. Zahensky | LOCATION: Parcel E

Sample Number	Exposure Rate (µR/hr) Contact	Exposure Rate (µR/hr) 1 Meter	Fixed + Removable (NET) Gamma (cpm)	Fixed + Removable (NET) Alpha dpm/100cm2	Fixed + Removable (NET) Beta/Gamma dpm/100cm2	Removable (NET) Alpha dpm/100cm2	Removable (NET) Beta/Gamma dpm/100cm2	Sample ID
1			3195	-8.00	-12.79	-0.47	-2.98	
2			3263	-3.56	-272.93	-0.47	5.65	
3			3365	-8.00	44.53	-0.47	3.50	
4			3162	5.34	-228.54	1.76	-0.82	
5			3181	14.23	79.81	-0.47	-0.82	
6			3105	36.46	-70.11	1.76	5.65	
7			3139	-8.00	172.40	3.99	3.50	
8			3193	9.78	-184.74	-0.47	14.29	
9			3027	-3.56	150.35	-0.47	14.29	
10			3156	9.78	-202.38	-0.47	1.34	
11			3224	5.34	190.04	-0.47	3.50	
12			3279	5.34	-224.43	-0.47	-0.82	
13			3088	0.89	18.08	-0.47	1.34	
14			3323	5.34	-303.79	1.76	7.81	
15			3753	14.23	234.13	1.76	7.81	
16			3511	0.89	-233.25	-0.47	3.50	
17			2974	14.23	379.63	-0.47	8.97	
18			3611	5.34	-127.43	1.76	3.50	
19			3213	18.67	309.08	-0.47	7.81	
20			3267	14.23	-70.11	-0.47	5.65	
21			3418	-3.56	62.17	-0.47	3.50	
22			3845	-3.56	-250.88	1.76	1.34	
23			3271	0.89	4.85	-0.47	1.34	
24			3417	-3.56	-211.20	-0.47	7.81	
25			3110	-8.00	145.94	-0.47	3.50	
26			3719	0.89	-153.88	-0.47	-2.98	

Reviewer: JTA

Survey locations AS defined within ACR
within limiting values as defined in the HSI
Discrete Radiogenic work Rev
Radiogenic Level Cr Gen Supervisor 8-31-10

SMEAR COUNTING ANALYSIS REPORT

ORIGINAL

COUNT DATE:	08/27/10	ANALYSIS PERFORMED BY:	C. Alexander
NWTS#:	HPS-PEPIPE-082710-010		
INSTRUMENT I.D.:	Protean WPC 9550	DETECTOR I.D.:	0815068
EFFICIENCIES: α:	14.93%	MDA: α: 10.54 dpm	Cal Due Date: 7/8/2011
βγ:	15.66%	βγ: 15.54 dpm	
SMEARS COLLECTED BY:	R. Zahensky		
SAMPLE COUNT TIME:	3 Minutes	ACTIVITY REPORT IN:	dpm/100cm²
α BACKGROUND:	0.07 CPM	βγ BACKGROUND:	0.46 CPM

Remarks: Pipe Survey Parcel E SW00434, SW00435, SW00436

	GROSS COUNTS		NET COUNTS		NET ACTIVITY	
	α	βγ	α	βγ	α	βγ
Smear #1	0	0	-0.07	-0.46	-0.47	-2.90
Smear #2	0	4	-0.07	0.87	-0.47	5.50
Smear #3	0	3	-0.07	0.54	-0.47	3.40
Smear #4	1	1	0.26	-0.13	1.76	-0.80
Smear #5	0	1	-0.07	-0.13	-0.47	-0.80
Smear #6	1	4	0.26	0.87	1.76	5.50
Smear #7	2	3	0.60	0.54	4.00	3.40
Smear #8	0	8	-0.07	2.21	-0.47	13.89
Smear #9	0	8	-0.07	2.21	-0.47	13.89
Smear #10	0	2	-0.07	0.21	-0.47	1.30
Smear #11	0	3	-0.07	0.54	-0.47	3.40
Smear #12	0	1	-0.07	-0.13	-0.47	-0.80
Smear #13	0	2	-0.07	0.21	-0.47	1.30
Smear #14	1	5	0.26	1.21	1.76	7.60
Smear #15	1	5	0.26	1.21	1.76	7.60
Smear #16	0	3	-0.07	0.54	-0.47	3.40
Smear #17	0	6	-0.07	1.54	-0.47	9.69
Smear #18	1	3	0.26	0.54	1.76	3.40
Smear #19	0	5	-0.07	1.21	-0.47	7.60
Smear #20	0	4	-0.07	0.87	-0.47	5.50
Smear #21	0	3	-0.07	0.54	-0.47	3.40
Smear #22	1	2	0.26	0.21	1.76	1.30
Smear #23	0	2	-0.07	0.21	-0.47	1.30
Smear #24	0	5	-0.07	1.21	-0.47	7.60
Smear #25	0	3	-0.07	0.54	-0.47	3.40
Smear #26	0	0	-0.07	-0.46	-0.47	-2.90

Remarks:

Reviewed by: R. Utley

Date: 8/31/10

NEW WORLD TECHNOLOGY FORM NWT-006 v2

RADIATION/CONTAMINATION SURVEY FORM

Date: 8/31/2010 Time: 7:55	INSTRUMENTATION USED						
	Model Inst/Det.	Serial Number	Calibration Due Date	Instrument % Efficiency	Total % Efficiency	MDC/MDA + (dpm/100cm2)	Background + (dpm/100cm2)
Survey Number: HPS-PEPIPE-083110-011	2360	193680	3/4/2011	α 35.70%	α 8.93%	α 34.54	α 4.67
	43-68	075150		βγ 36.00%	βγ 9.00%	βγ 197.75	βγ 356.70
Location: Parcel E	Protean	0615068	8/17/2010	α 59.79%	α 14.95%	α 8.74	α 0.13
				βγ 61.78%	βγ 15.45%	βγ 16.87	βγ 3.56
Surveyor: J. Rolfe							
Surveyor Signature: J. Rolfe	2350-1	98617	10/30/2010				5
	44-10	211667					Kcpm
Isotopes of Concern:: Ra-226; Cs-137; Sr-90	Static Count Time: 2 Minutes (2360)						
	Description: Parcel E/UC3 Pipe						

Pipe	Smear Number	Pipe	Smear Number
03-E16-00-8M-31	1,2		
03-E16-00-8M-32	3,4		
03-E16-00-8M-33	5,6		
03-E16-00-8M-34	7,8		
03-E16-00-8M-35	9,10		
03-E16-00-8M-36	11,12		
03-E16-00-8M-37	13,14		
03-E16-00-8M-38	15,16		
03-E16-00-8M-39	17,18		
03-E16-00-8M-40	19,20		

Comments

1) Accessible component surfaces (identifed above by "Pipe" [Section ID] and "Smear Number") received preliminary LAW's followed by a detailed sample (scan and static survey) using Ludlum Meter/Dectector Models "2350-1 w/ 44-10" and "2360 w/ 43-68" or equivalent.
2) In addition to sample (survey) results documented within, LAW's did not indicate the presence of loose surface contaminants (α β γ).
3) Material surfaces corresponding to survey results within will be left intact as part of operationally active systems, componets, and/or structures. ☐ YES ☒ NO

Legend

K = Thousands
LAW = Large Area Swipe

RADIATION/CONTAMINATION SURVEY SUPPLEMENT

SURVEY NUMBER: HPS-PEPIPE-083110-011

SURVEYOR: J. Rolfe | LOCATION: Parcel E

Sample Number	Exposure Rate (µ R/hr) Contact	Exposure Rate (µ R/hr) 1 Meter	Fixed + Removable (NET) Gamma (cpm)	Fixed + Removable (NET) Alpha dpm/100cm2	Fixed + Removable (NET) Beta/Gamma dpm/100cm2	Removable (NET) Alpha dpm/100cm2	Removable (NET) Beta/Gamma dpm/100cm2	Sample ID
1			3318	-0.44	146.38	-0.13	0.76	
2			3601	-0.44	-228.40	-0.13	2.91	
3			3797	4.00	177.25	-0.13	-3.56	
4			3532	-4.89	-290.12	-0.13	0.76	
5			3239	-4.89	128.75	-0.13	0.76	
6			3503	-0.44	-325.40	-0.13	0.76	
7			3341	-4.89	124.34	2.10	2.91	
8			3493	-0.44	-281.31	-0.13	9.39	
9			2970	12.89	-60.85	4.33	-3.56	
10			3407	-0.44	-294.53	-0.13	5.07	
11			2273	17.34	-237.21	-0.13	-1.40	
12			3031	4.00	-25.57	-0.13	11.55	
13			2432	-0.44	-294.53	-0.13	-1.40	
14			3081	4.00	119.93	4.33	5.07	
15			2509	-4.89	-312.17	-0.13	-1.40	
16			3059	8.45	-338.62	-0.13	5.07	
17			3370	-0.44	-166.67	-0.13	5.07	
18			3564	-4.89	-351.85	-0.13	-1.40	
19			3002	-4.89	-16.75	-0.13	0.76	
20			3584	-4.89	-237.21	-0.13	0.76	

Reviewer: [signature] Survey locations as detailed within satisfactory meet limiting values as defined in the HPS Brownfield Radiological Work Plan (Radiologically cleared for final disposition purposes) 8-31-10

SMEAR COUNTING ANALYSIS REPORT

ORIGINAL

COUNT DATE:	08/31/10	ANALYSIS PERFORMED BY:	A. Alexander
NWTS#:	HPS-PEPIPE-083110-011		
INSTRUMENT I.D.:	Protean WPC 9550	DETECTOR I.D.:	0615066
EFFICIENCIES: α:	14.93%	MDA: α: 8.75 dpm	Cal Due Date: 7/8/2011
βγ:	15.80%	βγ: 18.40 dpm	
SMEARS COLLECTED BY:	K. Rolle		
SAMPLE COUNT TIME:	3 Minutes	ACTIVITY REPORT IN:	dpm/100cm²
α BACKGROUND:	0.02 CPM	βγ BACKGROUND:	0.55 CPM

Remarks: Pipe Survey Parcel E SW00437/SW00438	GROSS COUNTS		NET COUNTS		NET ACTIVITY	
	α	βγ	α	βγ	α	βγ
Smear #1	0	2	-0.02	0.12	-0.13	0.73
Smear #2	0	3	-0.02	0.45	-0.13	2.83
Smear #3	0	0	-0.02	-0.55	-0.13	-3.46
Smear #4	0	2	-0.02	0.12	-0.13	0.73
Smear #5	0	2	-0.02	0.12	-0.13	0.73
Smear #6	0	2	-0.02	0.12	-0.13	0.73
Smear #7	1	3	0.31	0.45	2.10	2.83
Smear #8	0	6	-0.02	1.45	-0.13	9.13
Smear #9	2	0	0.65	-0.55	4.33	-3.46
Smear #10	0	4	-0.02	0.78	-0.13	4.93
Smear #11	0	1	-0.02	-0.22	-0.13	-1.36
Smear #12	0	7	-0.02	1.78	-0.13	11.22
Smear #13	0	1	-0.02	-0.22	-0.13	-1.36
Smear #14	2	4	0.65	0.78	4.33	4.93
Smear #15	0	1	-0.02	-0.22	-0.13	-1.36
Smear #16	0	4	-0.02	0.78	-0.13	4.93
Smear #17	0	4	-0.02	0.78	-0.13	4.93
Smear #18	0	1	-0.02	-0.22	-0.13	-1.36
Smear #19	0	2	-0.02	0.12	-0.13	0.73
Smear #20	0	2	-0.02	0.12	-0.13	0.73

Remarks:

Reviewed by: R. Stutz

Date: 9/1/10

NEW WORLD TECHNOLOGY FORM NWT-006 v2

RADIATION/CONTAMINATION SURVEY FORM

Date: 8/31/2010 Time: 10:40	INSTRUMENTATION USED						
	Model Inst/Det.	Serial Number	Calibration Due Date	Instrument % Efficiency	Total % Efficiency	MDC/MDA + (dpm/100cm2)	Background + (dpm/100cm2)
Survey Number: HPS-PEPIPE-083110-012	2360 43-68	193680 075150	3/4/2011	α 35.70% βγ 36.00%	α 8.93% βγ 9.00%	α 36.93 βγ 213.65	α 5.78 βγ 420.83
Location: Parcel E	Pretean	0015068	8/17/2010	α 59.79% βγ 61.78%	α 14.95% βγ 15.45%	α 10.24 βγ 17.60	α 0.40 βγ 4.08
Surveyor: J. Rolfe							
Surveyor Signature: Justin Pittman for JR	2350-1 44-10	98617 211667	10/30/2010				6 Kcpm
Isotopes of Concern: Ra-226; Cs-137; Sr-90	Static Count Time: 2 Minutes (2360)						
	Description: Parcel E/UC3 Pipe						

Pipe	Smear Number	Pipe	Smear Number
03-E16-00-1C-01	1,2		
03-E16-00-1C-02	3,4		
03-E16-00-1C-03	5,6		
03-E16-00-1C-04	7,8		
03-E16-00-1D-03	9,10		
03-E16-00-1D-04	11,12		
03-E16-00-1D-05	13,14		
03-E16-00-1D-06	15,16		

Comments

1) Accessible component surfaces (identified above by "Pipe" [Section ID] and "Smear Number") received preliminary LAW's followed by a detailed sample (scan and static survey) using Ludlum Meter/Dectector Models "2350-1 w/ 44-10" and "2350 w/ 43-68" or equivalent.
2) In addition to sample (survey) results documented within, LAW's did not indicate the presence of loose surface contaminants (α β γ).
3) Material surfaces corresponding to survey results within will be left intact as part of operationally active systems, components, and/or structures. ☐ YES ☒ NO

Legend

K = Thousands
LAW = Large Area Wipe

RADIATION/CONTAMINATION SURVEY SUPPLEMENT

SURVEY NUMBER: HPS-FEPIPE-080110-012

SURVEYOR: J. Rolle | LOCATION: Parcel E

Sample Number	Exposure Rate (µR/hr) Contact	Exposure Rate (µR/hr) 1 Meter	Fixed + Removable (NET) Gamma (cpm)	Fixed + Removable (NET) Alpha dpm/100cm2	Fixed + Removable (NET) Beta/Gamma dpm/100cm2	Removable (NET) Alpha dpm/100cm2	Removable (NET) Beta/Gamma dpm/100cm2	Sample ID
1			4716	-7.11	110.67	-0.40	2.40	
2			4671	16.12	176.61	-0.40	2.40	
3			4626	16.12	137.13	1.83	4.65	
4			4729	6.22	132.72	-0.40	-4.08	
5			4968	6.22	198.85	-0.40	2.40	
6			4816	-2.67	150.35	1.83	0.24	
7			4942	-7.11	-70.11	-0.40	6.71	
8			4298	6.22	44.63	-0.40	4.65	
9			5798	-2.67	-206.79	-0.40	2.40	
10			4927	1.78	-206.79	-0.40	2.40	
11			5860	10.67	-105.38	-0.40	-4.08	
12			5038	10.67	-215.61	1.83	-4.08	
13			6070	-2.67	132.72	-0.40	0.24	
14			4984	10.67	-255.29	-0.40	0.24	
15			6078	-2.67	-123.92	-0.40	0.24	
16			5016	10.67	-61.29	1.83	6.71	

Reviewer: [illegible] Survey numbers determined satisfactory and limiting values as defined in the HP Records Database were met (Radiography exams for final inspection project) — 9.2.10

SMEAR COUNTING ANALYSIS REPORT ORIGINAL

COUNT DATE:	08/31/10	ANALYSIS PERFORMED BY:	E. Schrader
NWTS#:	HPS-PEPIPE-083110-012		
INSTRUMENT I.D.:	Protean WPC 9550	DETECTOR I.D.:	6515068
EFFICIENCIES: α:	14.93%	MDA: α:	10.25 dpm Cal Due Date: 7/9/2011
βγ:	15.69%	βγ:	17.11 dpm
SMEARS COLLECTED BY:	K. Rolle		
SAMPLE COUNT TIME:	3 Minutes	ACTIVITY REPORT IN:	dpm/100cm²
α BACKGROUND:	0.06 CPM	βγ BACKGROUND:	0.63 CPM

Remarks: Pipe Survey Parcel E SW 00439 & SW 00440

	GROSS COUNTS		NET COUNTS		NET ACTIVITY	
	α	βγ	α	βγ	α	βγ
Smear #1	0	3	-0.06	0.37	-0.40	2.33
Smear #2	0	3	-0.06	0.37	-0.40	2.33
Smear #3	1	4	0.27	0.70	1.83	4.43
Smear #4	0	0	-0.06	-0.63	-0.40	-3.97
Smear #5	0	3	-0.06	0.37	-0.40	2.33
Smear #6	1	2	0.27	0.04	1.83	0.23
Smear #7	0	5	-0.06	1.04	-0.40	6.53
Smear #8	0	4	-0.06	0.70	-0.40	4.43
Smear #9	0	3	-0.06	0.37	-0.40	2.33
Smear #10	0	3	-0.06	0.37	-0.40	2.33
Smear #11	0	0	-0.06	-0.63	-0.40	-3.97
Smear #12	1	0	0.27	-0.63	1.83	-3.97
Smear #13	0	2	-0.06	0.04	-0.40	0.23
Smear #14	0	2	-0.06	0.04	-0.40	0.23
Smear #15	0	2	-0.06	0.04	-0.40	0.23
Smear #16	1	5	0.27	1.04	1.83	6.53

Remarks:

Reviewed by: R. Stutz Date: 9/2/10

NBW WORLD TECHNOLOGY FORM NWT-008 v2

RADIATION/CONTAMINATION SURVEY FORM

Date: 8/31/2010	Time: 13:10	INSTRUMENTATION USED						
		Model Inst/Det.	Serial Number	Calibration Due Date	Instrument % Efficiency	Total % Efficiency	MDC/MDA + (dpm/100cm2)	Background + (dpm/100cm2)
Survey Number: HPS-PEPIPE-083110-013		2360 43-68	193680 078150	3/4/2011	α 35.70% βγ 36.00%	α 8.93% βγ 9.00%	α 41.48 βγ 205.51	α 8.23 βγ 387.36
Location: Parcel E		Protean	0615008	8/17/2010	α 59.79% βγ 61.76%	α 14.95% βγ 15.45%	α 10.24 βγ 17.60	α 0.40 βγ 4.08
Surveyor: J. Rolfe								
Surveyor Signature: Justin Hilland for JR		2350-1 44-10	98617 211667	10/30/2010				5 Kcpm
Isotopes of Concern:: Ra-226; Cs-137; Sr-90		Static Count Time: 2 Minutes (2360)						
		Description: Parcel E/UC3 Pipe						

Pipe	Smear Number
03-E16-00-8M-41	1,2
03-E16-00-8M-42	3,4
03-E16-00-8M-43	5,6
03-E16-00-8M-44	7,8
03-E16-00-8M-45	9,10
03-E16-00-8M-46	11,12
03-E16-00-8M-47	13,14
03-E16-00-8M-48	15,16
03-E16-00-8M-49	17,18
03-E16-00-8M-50	19,20
03-E16-00-8M-51	21,22
03-E16-00-8M-52	23,24
03-E16-00-8M-53	25,26
03-E16-00-8M-54	27,28
03-E16-00-8M-55	29,30
03-E16-00-8M-56	31,32

Pipe	Smear Number
03-E16-00-8M-57	33,34
03-E16-00-8M-58	35,36

Comments

1) Accessible component surfaces (identifed above by "Pipe" [Section ID] and "Smear Number") received preliminary LAWs followed by a detailed sample (scan and static survey) using Ludlum Meter/Dectector Models "2350-1 w/ 44-10" and "2360 w/ 43-68" or equivalent.
2) In addition to sample (survey) results documented within, LAWs did not indicate the presence of loose surface contaminants (α β γ).
3) Material surfaces corresponding to survey results within will be left intact as part of operationally active systems, componets, and/or structures. ☐ YES ☒ NO

Legend

K = Thousands
LAW = Large Area Wipe

RADIATION/CONTAMINATION SURVEY SUPPLEMENT

SURVEY NUMBER: HPS-PEPIPE-083110-013

SURVEYOR: J. Rolfe | LOCATION: Parcel E

Sample Number	Exposure Rate (µR/hr) Contact	Exposure Rate (µR/hr) 1 Meter	Fixed + Removable (NET) Gamma (cpm)	Fixed + Removable (NET) Alpha dpm/100cm2	Fixed + Removable (NET) Beta/Gamma dpm/100cm2	Removable (NET) Alpha dpm/100cm2	Removable (NET) Beta/Gamma dpm/100cm2	Sample ID
1			3347	-12.00	221.78	1.83	0.24	
2			3262	1.33	-298.60	1.83	11.03	
3			3680	1.33	64.23	-0.40	13.19	
4			3654	1.33	-258.82	-0.40	-4.08	
5			3457	6.78	138.01	-0.40	-1.92	
6			3550	6.78	-235.77	-0.40	6.71	
7			3232	-12.00	89.51	-0.40	13.19	
8			3277	-12.00	-113.32	-0.40	6.71	
9			3289	1.33	202.33	-0.40	11.03	
10			3701	-18.45	-302.91	-0.40	-1.92	
11			3682	-3.11	-108.91	-0.40	0.24	
12			3845	-12.00	-276.46	-0.40	6.71	
13			2982	14.67	173.28	-0.40	11.03	
14			3766	1.33	-272.05	-0.40	11.03	
15			3453	1.33	-7.50	1.83	0.24	
16			3489	-12.00	-311.73	-0.40	-1.92	
17			2976	10.23	107.14	-0.40	0.24	
18			3394	-7.55	-351.41	1.83	2.40	
19			2978	-3.11	41.01	-0.40	-1.92	
20			3234	-3.11	-360.23	-0.40	-1.92	
21			4045	-3.11	186.51	1.83	2.40	
22			3813	1.33	-91.27	1.83	-1.92	
23			3408	-12.00	160.05	4.06	4.55	
24			3561	10.23	-64.81	1.83	-1.92	
25			3436	-7.55	76.28	-0.40	8.87	
26			3520	6.78	-126.54	-0.40	6.71	
27			3498	-7.56	111.65	-0.40	0.24	
28			3641	-3.11	-329.37	1.83	4.55	
29			3074	14.67	261.46	-0.40	2.40	
30			3569	-12.00	-179.45	-0.40	0.24	
31			2947	6.78	252.65	1.83	0.24	
32			3322	1.33	-259.82	1.83	6.71	
33			3015	19.12	369.33	-0.40	2.40	
34			3795	10.23	-197.09	-0.40	2.40	
35			3163	10.23	283.51	1.83	-4.08	
36			3629	10.23	-205.91	-0.40	-4.08	

Reviewer: [signature]

Survey locations as delineated within Sub-Contractor must meet/exceed as defined in the HPS Decontamination Radiological Work Plan (Radiologically cleared for final disposition purposes) — 9.2.10

ORIGINAL

SMEAR COUNTING ANALYSIS REPORT

COUNT DATE:	09/01/10	ANALYSIS PERFORMED BY:	E. Schaeder
NWTS#:	HPS-PEPPE-083110-013		
INSTRUMENT I.D.:	Protean WPC 9550	DETECTOR I.D.:	0815088
EFFICIENCIES: α:	14.93%	MDA: α: 10.25 dpm	Cal Due Date: 7/8/2011
βγ:	16.89%	βγ: 17.11 dpm	
SMEARS COLLECTED BY:	K. Rolfe		
SAMPLE COUNT TIME:	3 Minutes	ACTIVITY REPORT IN:	dpm/100cm²
α BACKGROUND:	0.06 CPM	βγ BACKGROUND:	0.63 CPM

Remarks: Pipe Survey Parcel E SW00441, SW00442 & SW00443

	GROSS COUNTS		NET COUNTS		NET ACTIVITY	
	α	βγ	α	βγ	α	βγ
Smear #1	1	2	0.27	0.04	1.83	0.23
Smear #2	1	7	0.27	1.70	1.83	10.72
Smear #3	0	8	-0.06	2.04	-0.40	12.82
Smear #4	0	0	-0.06	-0.63	-0.40	-3.97
Smear #5	0	1	-0.06	-0.30	-0.40	-1.87
Smear #6	0	5	-0.06	1.04	-0.40	6.53
Smear #7	0	8	-0.06	2.04	-0.40	12.82
Smear #8	0	5	-0.06	1.04	-0.40	6.53
Smear #9	0	7	-0.06	1.70	-0.40	10.72
Smear #10	0	1	-0.06	-0.30	-0.40	-1.87
Smear #11	0	2	-0.06	0.04	-0.40	0.23
Smear #12	0	5	-0.06	1.04	-0.40	6.53
Smear #13	0	7	-0.06	1.70	-0.40	10.72
Smear #14	0	7	-0.06	1.70	-0.40	10.72
Smear #15	1	2	0.27	0.04	1.83	0.23
Smear #16	0	1	-0.06	-0.30	-0.40	-1.87
Smear #17	0	2	-0.06	0.04	-0.40	0.23
Smear #18	1	3	0.27	0.37	1.83	2.33
Smear #19	0	1	-0.06	-0.30	-0.40	-1.87
Smear #20	0	1	-0.06	-0.30	-0.40	-1.87
Smear #21	1	3	0.27	0.37	1.83	2.33
Smear #22	1	1	0.27	-0.30	1.83	-1.87
Smear #23	2	4	0.61	0.70	4.06	4.43
Smear #24	1	1	0.27	-0.30	1.83	-1.87
Smear #25	0	6	-0.06	1.37	-0.40	8.62
Smear #26	0	5	-0.06	1.04	-0.40	6.53
Smear #27	0	2	-0.06	0.04	-0.40	0.23
Smear #28	1	4	0.27	0.70	1.83	4.43
Smear #29	0	3	-0.06	0.37	-0.40	2.33
Smear #30	0	2	-0.06	0.04	-0.40	0.23
Smear #31	1	2	0.27	0.04	1.83	0.23
Smear #32	1	5	0.27	1.04	1.83	6.53
Smear #33	0	3	-0.06	0.37	-0.40	2.33
Smear #34	0	3	-0.06	0.37	-0.40	2.33
Smear #35	1	0	0.27	-0.63	1.83	-3.97
Smear #36	0	0	-0.06	-0.63	-0.40	-3.97

Remarks:

Reviewed by: R. Utley

Date: 9/2/10

NEW WORLD TECHNOLOGY FORM NWT-008 v2

RADIATION/CONTAMINATION SURVEY FORM

Date: 9/1/2010	Time: 9:20	INSTRUMENTATION USED						
		Model Inst/Det.	Serial Number	Calibration Due Date	Instrument % Efficiency	Total % Efficiency	MDC/MDA + (dpm/100cm2)	Background + (dpm/100cm2)
Survey Number: HPS-PEPIPE-090110-014		2360	193680	3/4/2011	α 35.70%	α 8.93%	α 36.00	α 5.34
		43-68	075150		βγ 36.00%	βγ 9.00%	βγ 197.35	βγ 355.16
Location: Parcel E		Protean	0615068	8/17/2010	α 59.79%	α 14.95%	α 12.86	α 1.14
					βγ 61.78%	βγ 15.45%	βγ 17.06	βγ 3.69
Surveyor: J. Rolfe								
Surveyor Signature:		2350-1	98617	10/30/2010				5
		44-10	211667					Kcpm
Isotopes of Concern:: Ra-226; Cs-137; Sr-90		Static Count Time: 2 Minutes (2360)						
		Description: Parcel E/UC3 Pipe						

Pipe	Smear Number
03-E16-00-8M-59	1,2
03-E16-00-8M-60	3,4
03-E16-00-8M-61	5,6
03-E16-00-8M-62	7,8
03-E16-00-8M-63	9,10
03-E16-00-8M-64	11,12
03-E16-00-8M-65	13,14
03-E16-00-8M-66	15,16
03-E16-00-8M-67	17,18
03-E16-00-8M-68	19,20
03-E16-00-8M-69	21,22
03-E16-00-8M-70	23,24
03-E16-00-8M-71	25,26
03-E16-00-8M-72	27,28
03-E16-00-8M-73	29,30
03-E16-00-8M-74	31,32

Pipe	Smear Number
03-E16-00-8M-75	33,34
03-E16-00-8M-76	35,36

Comments

1) Accessible component surfaces (identifed above by "Pipe" (Section ID) and "Smear Number") received preliminary LAWs followed by a detailed sample (scan and static survey) using Ludlum Meter/Daclector Models "2350-1 w/ 44-10" and "2360 w/ 43-68" or equivalent.
2) In addition to ssmple (survey) results documented within, LAWs did not indicate the presence of loose surface contaminants (α β γ).
3) Material surfaces corresponding to survey results within will be left intact as part of operationally active systems, componets, and/or structures. ☐ YES ☒ NO

Legend

K = Thousands
LAW = Large Area Swipe

RADIATION/CONTAMINATION SURVEY SUPPLEMENT

SURVEY NUMBER: HPS-PEPIPE-090110-014

SURVEYOR: J. Rolfe | LOCATION: Parcel E

Sample Number	Exposure Rate (µR/hr) Contact	Exposure Rate (µR/hr) 1 Meter	Fixed + Removable (NET) Gamma (cpm)	Fixed + Removable (NET) Alpha dpm/100cm2	Fixed + Removable (NET) Beta/Gamma dpm/100cm2	Removable (NET) Alpha dpm/100cm2	Removable (NET) Beta/Gamma dpm/100cm2	Sample ID
1			3175	-1.78	237.65	-1.14	-3.69	
2			3711	7.11	-256.17	1.09	4.94	
3			3058	-6.22	-0.44	-1.14	16.73	
4			3826	11.56	-203.26	-1.14	2.78	
5			2967	7.11	299.38	-1.14	7.10	
6			3493	-6.22	-172.40	-1.14	0.63	
7			3356	2.67	87.74	-1.14	2.78	
8			4362	16.01	-185.63	1.09	7.10	
9			3612	-6.22	202.38	-1.14	-3.69	
10			4318	11.56	-225.31	-1.14	4.94	
11			3153	-6.22	233.25	-1.14	0.63	
12			4188	-1.78	-212.08	3.32	2.78	
13			3232	-1.78	356.70	1.09	9.28	
14			3812	11.56	-190.04	-1.14	11.42	
15			3069	-6.22	158.29	-1.14	2.78	
16			3830	20.45	-176.81	-1.14	9.26	
17			3432	-6.22	255.29	-1.14	-1.53	
18			3814	2.67	-159.17	1.09	9.26	
19			3762	2.67	206.79	-1.14	4.94	
20			4177	11.56	-44.53	1.09	7.10	
21			3555	7.11	145.06	-1.14	7.10	
22			3742	16.01	-194.44	-1.14	9.26	
23			3297	7.11	220.02	-1.14	-1.53	
24			3834	20.45	-128.31	1.09	-1.53	
25			3484	24.90	268.52	-1.14	0.63	
26			3865	24.90	-172.40	-1.14	2.78	
27			3758	7.11	189.15	1.09	-1.53	
28			3931	16.01	-110.67	-1.14	2.78	
29			3603	-1.78	281.75	1.09	-1.53	
30			3831	24.90	-44.53	1.09	7.10	
31			3131	16.01	365.52	-1.14	9.26	
32			3599	20.45	-101.85	-1.14	4.94	
33			3547	7.11	228.84	-1.14	11.42	
34			3656	7.11	-31.31	1.09	-1.53	
35			2621	-1.78	189.15	-1.14	4.94	
36			4093	20.45	-101.85	-1.14	2.78	

Reviewer: [signature]

Items as detailed within are radiologically cleared for final disposition purposes — 9.8.10

SMEAR COUNTING ANALYSIS REPORT

ORIGINAL

COUNT DATE:	09/02/10	ANALYSIS PERFORMED BY:	A. Alexander
NWTS#:	HPS-PEPIPE-090110-014		
INSTRUMENT I.D.:	Protean WPC 9550	DETECTOR I.D.:	0615088
EFFICIENCIES: α:	14.93%	MDA: α: 12.68 dpm	Cal Due Date: 7/9/2011
βγ:	15.89%	βγ: 16.59 dpm	
SMEARS COLLECTED BY:	K. Rolfe		
SAMPLE COUNT TIME:	3 Minutes	ACTIVITY REPORT IN:	dpm/100cm²
α BACKGROUND:	0.17 CPM	βγ BACKGROUND:	0.67 CPM

Remarks: Pipe Survey Parcel E SW00444/SW00445/SW00446

	GROSS COUNTS		NET COUNTS		NET ACTIVITY	
	α	βγ	α	βγ	α	βγ
Smear #1	0	0	-0.17	-0.67	-1.14	-3.59
Smear #2	1	4	0.16	0.76	1.09	4.80
Smear #3	0	9	-0.17	2.43	-1.14	15.30
Smear #4	0	3	-0.17	0.43	-1.14	2.71
Smear #5	0	5	-0.17	1.10	-1.14	6.90
Smear #6	0	2	-0.17	0.10	-1.14	0.61
Smear #7	0	3	-0.17	0.43	-1.14	2.71
Smear #8	1	5	0.16	1.10	1.09	6.90
Smear #9	0	0	-0.17	-0.67	-1.14	-3.59
Smear #10	0	4	-0.17	0.76	-1.14	4.80
Smear #11	0	2	-0.17	0.10	-1.14	0.61
Smear #12	2	3	0.50	0.43	3.33	2.71
Smear #13	1	8	0.16	1.43	1.09	9.00
Smear #14	0	7	-0.17	1.76	-1.14	11.10
Smear #15	0	3	-0.17	0.43	-1.14	2.71
Smear #16	0	8	-0.17	1.43	-1.14	9.00
Smear #17	0	1	-0.17	-0.24	-1.14	-1.49
Smear #18	1	8	0.16	1.43	1.09	9.00
Smear #19	0	4	-0.17	0.76	-1.14	4.80
Smear #20	1	5	0.16	1.10	1.09	6.90
Smear #21	0	5	-0.17	1.10	-1.14	6.90
Smear #22	0	8	-0.17	1.43	-1.14	9.00
Smear #23	0	1	-0.17	-0.24	-1.14	-1.49
Smear #24	1	1	0.16	-0.24	1.09	-1.49
Smear #25	0	2	-0.17	0.10	-1.14	0.61
Smear #26	0	3	-0.17	0.43	-1.14	2.71
Smear #27	1	1	0.16	-0.24	1.09	-1.49
Smear #28	0	3	-0.17	0.43	-1.14	2.71
Smear #29	1	1	0.16	-0.24	1.09	-1.49
Smear #30	1	5	0.16	1.10	1.09	6.90
Smear #31	0	8	-0.17	1.43	-1.14	9.00
Smear #32	0	4	-0.17	0.76	-1.14	4.80
Smear #33	0	7	-0.17	1.76	-1.14	11.10
Smear #34	1	1	0.16	-0.24	1.09	-1.49
Smear #35	0	4	-0.17	0.76	-1.14	4.80
Smear #36	0	3	-0.17	0.43	-1.14	2.71

Remarks:

Reviewed by: R. Flatley

Date: 9/3/10

NEW WORLD TECHNOLOGY FORM NWT-005 v2

RADIATION/CONTAMINATION SURVEY FORM

Date: 9/2/2010 Time: 10:30	INSTRUMENTATION USED						
	Model Inst/Det.	Serial Number	Calibration Due Date	Instrument % Efficiency	Total % Efficiency	MDC/MDA + (dpm/100cm2)	Background + (dpm/100cm2)
Survey Number: HPS-PEPIPE-090210-016	2360	193680	3/4/2011	α 35.70%	α 8.93%	α 27.97	α 2.22
	43-68	075150		βγ 38.00%	βγ 9.00%	βγ 202.09	βγ 373.68
Location: Parcel E	Protean	0615088	7/9/2011	α 59.72%	α 14.93%	α 10.54	α 0.47
				βγ 63.55%	βγ 15.89%	βγ 14.70	βγ 2.39
Surveyor: R. Zahensky							
Surveyor Signature:	2350-1 44-10	98617 211667	10/30/2010				5 Kcpm
Isotopes of Concern:: Ra-226; Cs-137; Sr-90	Static Count Time: 2 Minutes (2360)						
	Description: Parcel E/UC3 Pipe						

Pipe	Smear Number	Pipe	Smear Number
03-E16-00-8M-77	1,2		
03-E16-00-8M-78	3,4		
03-E16-00-8M-79	5,6		
03-E16-00-8M-80	7,8		
03-E16-00-8M-81	9,10		
03-E16-00-8M-82	11,12		
03-E16-00-8M-83	13,14		
03-E16-00-8M-84	15,16		
03-E16-00-8M-85	17,18		
03-E16-00-8M-86	19,20		
03-E16-00-8M-87	21,22		
03-E16-00-8M-88	23,24		

Comments

1) Accessible component surfaces (identifed above by "Pipe" [Section ID] and "Smear Number") received preliminary LAW's followed by a detailed sample (scan and static survey) using Ludlum Meter/Dectector Models "2350-1 w/ 44-10" and "2360 w/ 43-68" or equivalent.
2) In addition to sample (survey) results documented within, LAW's did not indicate the presence of loose surface contaminants (α β γ).
3) Material surfaces corresponding to survey results within will be left intact as part of operationally active systems, componets, and/or structures. ☐ YES ☐ NO

Legend

K = Thousands
LAW = Large Area Swipe

RADIATION/CONTAMINATION SURVEY SUPPLEMENT

SURVEY NUMBER: HPS-PEPIPE-090210-015

SURVEYOR: R. Zahensky | LOCATION: Parcel E

Sample Number	Exposure Rate (µR/hr)		Fixed + Removable (NET)			Removable (NET)		Sample ID
	Contact	1 Meter	Gamma (cpm)	Alpha dpm/100cm2	Beta/Gamma dpm/100cm2	Alpha dpm/100cm2	Beta/Gamma dpm/100cm2	
1			3318	8.89	235.89	-0.47	1.80	
2			4280	13.34	-33.07	1.76	6.00	
3			4069	4.45	235.89	-0.47	1.80	
4			4334	13.34	160.93	4.00	8.10	
5			4172	4.45	434.30	-0.47	16.49	
6			4502	4.45	310.85	1.76	3.90	
7			4068	4.45	249.12	-0.47	8.10	
8			4193	4.45	368.17	1.76	10.20	
9			3887	8.89	337.30	1.76	1.80	
10			4019	13.34	213.84	-0.47	1.80	
11			3304	17.78	346.12	4.00	-0.29	
12			3991	17.78	59.52	-0.47	1.80	
13			3245	17.78	-6.61	-0.47	-2.39	
14			4682	13.34	37.48	1.76	6.00	
15			3716	17.78	-28.66	1.76	-0.29	
16			4348	22.23	-2.20	-0.47	6.00	
17			3220	13.34	15.43	-0.47	-2.39	
18			4586	13.34	108.02	-0.47	-2.39	
19			3345	22.23	253.53	1.76	-0.29	
20			3655	8.89	112.43	1.76	-0.29	
21			3326	13.34	-63.93	1.76	6.00	
22			2956	8.89	-50.71	1.76	6.00	
23			3081	-4.45	63.93	1.76	-0.29	
24			3653	13.34	-138.89	-0.47	8.10	

Reviewer: [illegible] Items labeled with this footprint cleared for free disposition purposes — 9.10.10

ORIGINAL

SMEAR COUNTING ANALYSIS REPORT

COUNT DATE:	09/03/10	ANALYSIS PERFORMED BY:	C. Flidy
NWTS#:	HPS-PEPIPE-090210-016		
INSTRUMENT I.D.:	Protean WPC 9550	DETECTOR I.D.:	0818088
EFFICIENCIES: α:	14.93%	MDA: α: 10.54 dpm	Cal Due Date: 7/9/2011
βγ:	15.89%	βγ: 14.70 dpm	
SMEARS COLLECTED BY:	R. Zahensky		
SAMPLE COUNT TIME:	3 Minutes	ACTIVITY REPORT IN:	dpm/100cm²
α BACKGROUND:	0.07 CPM	βγ BACKGROUND:	0.38 CPM

Remarks: Pipe Survey Parcel E SW00447/SW00448

	GROSS COUNTS		NET COUNTS		NET ACTIVITY	
	α	βγ	α	βγ	α	βγ
Smear #1	0	2	-0.07	0.29	-0.47	1.80
Smear #2	1	4	0.26	0.95	1.76	6.00
Smear #3	0	2	-0.07	0.29	-0.47	1.80
Smear #4	2	5	0.60	1.29	4.00	8.10
Smear #5	0	9	-0.07	2.62	-0.47	16.49
Smear #6	1	3	0.26	0.62	1.76	3.90
Smear #7	0	5	-0.07	1.29	-0.47	8.10
Smear #8	1	6	0.26	1.62	1.76	10.20
Smear #9	1	2	0.26	0.29	1.76	1.80
Smear #10	0	2	-0.07	0.29	-0.47	1.80
Smear #11	2	1	0.60	-0.05	4.00	-0.29
Smear #12	0	2	-0.07	0.29	-0.47	1.80
Smear #13	0	0	-0.07	-0.38	-0.47	-2.39
Smear #14	1	4	0.26	0.95	1.76	6.00
Smear #15	1	1	0.26	-0.05	1.76	-0.29
Smear #16	0	4	-0.07	0.95	-0.47	6.00
Smear #17	0	0	-0.07	-0.38	-0.47	-2.39
Smear #18	0	0	-0.07	-0.38	-0.47	-2.39
Smear #19	1	1	0.26	-0.05	1.76	-0.29
Smear #20	1	1	0.26	-0.05	1.76	-0.29
Smear #21	1	4	0.26	0.95	1.76	6.00
Smear #22	1	4	0.26	0.95	1.76	6.00
Smear #23	1	1	0.26	-0.05	1.76	-0.29
Smear #24	0	5	-0.07	1.29	-0.47	8.10

Remarks:

Reviewed by: [signature] Date: 9/8/10

NEW WORLD TECHNOLOGY FORM NWT-006 v2

RADIATION/CONTAMINATION SURVEY FORM

Date: 9/7/2010	Time: 10:00	INSTRUMENTATION USED						
		Model Inst/Det.	Serial Number	Calibration Due Date	Instrument % Efficiency	Total % Efficiency	MDC/MDA + (dpm/100cm2)	Background + (dpm/100cm2)
Survey Number: HPS-PEPIPE-090710-016		2360	193680	3/4/2011	α 35.70%	α 8.93%	α 31.84	α 3.56
		43-68	075150		βγ 36.00%	βγ 9.00%	βγ 214.02	βγ 422.40
Location: Parcel E		Protean	0515068	7/9/2011	α 69.72%	α 14.93%	α 10.80	α 0.54
					βγ 63.55%	βγ 15.89%	βγ 18.56	βγ 5.10
Surveyor: R. Zahensky								
Surveyor Signature:		2350-1	98617	10/30/2010				5
		44-10	211667					Kcpm
Isotopes of Concern:: Ra-226; Cs-137; Sr-90		Static Count Time: 2 Minutes (2360)						
		Description: Parcel E/UC3 Pipe						

Pipe	Smear Number	Pipe	Smear Number
03-E16-00-1H-02	1,2	03-E16-00-1H-18	33,34
03-E16-00-1H-03	3,4	03-E16-00-1H-19	35,36
03-E16-00-1H-04	5,6		
03-E16-00-1H-05	7,8		
03-E16-00-1H-06	9,10		
03-E16-00-1H-07	11,12		
03-E16-00-1H-08	13,14		
03-E16-00-1H-09	15,16		
03-E16-00-1H-10	17,18		
03-E16-00-1H-11	19,20		
03-E16-00-1H-12	21,22		
03-E16-00-1H-13	23,24		
03-E16-00-1H-14	25,26		
03-E16-00-1H-15	27,28		
03-E16-00-1H-16	29,30		
03-E16-00-1H-17	31,32		

Comments

1) Accessible component surfaces (identifed above by "Pipe" [Section ID] and "Smear Number") received preliminary LAW's followed by a detailed sample (scan and static survey) using Ludlum Meter/Oeclector Models "2350-1 w/ 44-10" and "2360 w/ 43-68" or equivalent.
2) In addition to sample (survey) results documented within, LAW's did not indicate the presence of loose surface contaminants (α β γ).
3) Material surfaces corresponding to survey results within will be left intact as part of operationally active systems, componets, and/or structures. ☐ YES ☐ NO

Legend

K = Thousands
LAW = Large Area Swipe

RADIATION/CONTAMINATION SURVEY SUPPLEMENT

SURVEY NUMBER: HPS-PEPIPE-090710-016

SURVEYOR: R. Zahensky | LOCATION: Parcel E

Sample Number	Exposure Rate (µ R/hr) Contact	Exposure Rate (µ R/hr) 1 Meter	Fixed + Removable (NET) Gamma (cpm)	Fixed + Removable (NET) Alpha dpm/100cm2	Fixed + Removable (NET) Beta/Gamma dpm/100cm2	Removable (NET) Alpha dpm/100cm2	Removable (NET) Beta/Gamma dpm/100cm2	Sample ID
1			5270	6.22	451.50	1.70	-0.90	
2			6598	-2.67	213.40	-0.54	-0.90	
3			4910	10.67	279.54	-0.54	1.20	
4			5010	-7.11	53.49	-0.54	-0.90	
5			5568	1.78	336.86	1.70	-5.10	
6			4935	6.22	67.90	-0.54	9.59	
7			5337	1.78	429.46	-0.54	3.29	
8			4780	1.78	169.31	1.70	11.69	
9			6931	15.12	389.77	1.70	-5.10	
10			4981	1.78	72.31	1.70	-0.90	
11			6641	-2.67	385.36	1.70	9.59	
12			4986	10.67	63.49	-0.54	9.59	
13			5722	10.67	253.09	-0.54	-0.90	
14			4887	6.22	50.28	-0.54	7.49	
15			6460	15.12	398.59	-0.54	5.39	
16			5161	15.12	178.13	-0.54	-0.90	
17			6543	-2.67	222.22	-0.54	-3.00	
18			4886	6.22	350.09	1.70	-0.90	
19			4926	10.67	125.22	1.70	-5.10	
20			6177	6.22	336.86	-0.54	5.39	
21			6278	6.22	134.04	-0.54	1.20	
22			6297	6.22	358.91	-0.54	3.29	
23			6926	10.67	182.54	-0.54	1.20	
24			5107	1.78	147.27	-0.54	-3.00	
25			4888	10.67	398.59	-0.54	-3.00	
26			6365	-7.11	350.09	-0.54	1.20	
27			6395	1.78	195.77	1.70	3.29	
28			6377	10.67	442.68	-0.54	-3.00	
29			4945	-2.67	461.50	-0.54	11.69	
30			6465	10.67	217.81	-0.54	1.20	
31			4886	10.67	385.36	1.70	3.29	
32			4909	6.22	411.82	-0.54	13.78	
33			6470	6.22	37.04	-0.54	-3.00	
34			7012	6.22	372.13	-0.54	1.20	
35			4959	6.22	266.31	1.70	-0.90	
36			6196	6.22	394.18	-0.54	3.29	

Reviewer: JA

Items as detected within are radiologically cleared for free disposition purposes
9-10-10

SMEAR COUNTING ANALYSIS REPORT

ORIGINAL

COUNT DATE:	08/07/10	ANALYSIS PERFORMED BY:	A. Alexander
NWTS#:	HPS-PEPIPE-080710-018		
INSTRUMENT I.D.:	Protean WPC 9550	DETECTOR I.D.:	8615068
EFFICIENCIES: α:	14.93%	MDA: α: 16.80 dpm	Cal Due Date: 7/9/2011
βγ:	15.69%	βγ: 18.56 dpm	
SMEARS COLLECTED BY:	R. Zahensky		
SAMPLE COUNT TIME:	3 Minutes	ACTIVITY REPORT IN:	dpm/100cm²
α BACKGROUND:	0.08 CPM	βγ BACKGROUND:	0.81 CPM

Remarks: Pipe Survey Parcel E SW00449/SW00450/SW00451

	GROSS COUNTS		NET COUNTS		NET ACTIVITY	
	α	βγ	α	βγ	α	βγ
Smear #1	1	2	0.25	-0.14	1.70	-0.90
Smear #2	0	2	-0.08	-0.14	-0.54	-0.90
Smear #3	0	3	-0.08	0.19	-0.54	1.20
Smear #4	0	2	-0.08	-0.14	-0.54	-0.90
Smear #5	1	0	0.25	-0.81	1.70	-5.10
Smear #6	0	7	-0.08	1.52	-0.54	9.59
Smear #7	0	4	-0.08	0.52	-0.54	3.29
Smear #8	1	8	0.25	1.86	1.70	11.69
Smear #9	1	0	0.25	-0.81	1.70	-5.10
Smear #10	1	2	0.25	-0.14	1.70	-0.90
Smear #11	1	7	0.25	1.52	1.70	9.59
Smear #12	0	7	-0.08	1.52	-0.54	9.59
Smear #13	0	2	-0.08	-0.14	-0.54	-0.90
Smear #14	0	6	-0.08	1.19	-0.54	7.49
Smear #15	0	5	-0.08	0.86	-0.54	5.39
Smear #16	0	2	-0.08	-0.14	-0.54	-0.90
Smear #17	0	1	-0.08	-0.48	-0.54	-3.00
Smear #18	1	2	0.25	-0.14	1.70	-0.90
Smear #19	1	0	0.25	-0.81	1.70	-5.10
Smear #20	0	5	-0.08	0.86	-0.54	5.39
Smear #21	0	3	-0.08	0.19	-0.54	1.20
Smear #22	0	4	-0.08	0.52	-0.54	3.29
Smear #23	0	3	-0.08	0.19	-0.54	1.20
Smear #24	0	1	-0.08	-0.48	-0.54	-3.00
Smear #25	0	1	-0.08	-0.48	-0.54	-3.00
Smear #26	0	3	-0.08	0.19	-0.54	1.20
Smear #27	1	4	0.25	0.52	1.70	3.29
Smear #28	0	1	-0.08	-0.48	-0.54	-3.00
Smear #29	0	8	-0.08	1.86	-0.54	11.69
Smear #30	0	3	-0.08	0.19	-0.54	1.20
Smear #31	1	4	0.25	0.52	1.70	3.29
Smear #32	0	9	-0.08	2.19	-0.54	13.78
Smear #33	0	1	-0.08	-0.48	-0.54	-3.00
Smear #34	0	3	-0.08	0.19	-0.54	1.20
Smear #35	1	2	0.25	-0.14	1.70	-0.90
Smear #36	0	4	-0.08	0.52	-0.54	3.29

Remarks:

Reviewed by: [signature] Date: 9/8/10

NEW WORLD TECHNOLOGY FORM NWT-006 v2

RADIATION/CONTAMINATION SURVEY FORM

Date: 9/8/2010	Time: 8:00	INSTRUMENTATION USED						
		Model Inst/Det.	Serial Number	Calibration Due Date	Instrument % Efficiency	Total % Efficiency	MDC/MDA + (dpm/100cm2)	Background + (dpm/100cm2)
Survey Number: HPS-PEPIPE-090810-017		2360	193880	3/4/2011	α 35.70%	α 8.93%	α 30.02	α 2.89
		43-68	075150		βγ 36.00%	βγ 9.00%	βγ 234.99	βγ 515.21
Location: Parcel E		Protean	0615068	7/9/2011	α 59.72%	α 14.93%	α 11.05	α 0.60
					βγ 63.55%	βγ 15.89%	βγ 16.03	βγ 3.21
Surveyor: R. Zahensky								
Surveyor Signature:		2350-1	98617	10/30/2010				5
		44-10	211667					Kcpm
Isotopes of Concern:: Ra-226; Cs-137; Sr-90		Static Count Time: 2 Minutes (2360)						
		Description: Parcel E/UC3 Pipe						

Pipe	Smear Number
03-E16-00-1H-20	1,2
03-E16-00-1H-21	3,4
03-E16-00-1H-22	5,6
03-E16-00-1H-23	7,8
03-E16-00-1H-24	9,10
03-E16-00-1H-25	11,12
03-E16-00-1H-26	13,14
03-E16-00-1H-27	15,16
03-E16-00-1H-28	17,18
03-E16-00-1H-29	19,20
03-E16-00-1H-30	21,22
03-E16-00-1H-31	23,24
03-E16-00-1H-32	25,26
03-E16-00-1H-33	27,28
03-E16-00-1H-34	29,30
03-E16-00-1H-35	31,32

Pipe	Smear Number
03-E16-00-1H-36	33,34
03-E16-00-1H-37	35,36

Comments

1) Accessible component surfaces (identified above by "Pipe" [Section ID] and "Smear Number") received preliminary LAWs followed by a detailed sample (scan and static survey) using Ludlum Meter/Dectector Models "2350-1 w/ 44-10" and "2360 w/ 43-68" or equivalent.
2) In addition to sample (survey) results documented within, LAWs did not indicate the presence of loose surface contaminants (α β γ).
3) Material surfaces corresponding to survey results within will be left intact as part of operationally active systems, components, and/or structures. ☐ YES ☐ NO

Legend

K = Thousands
LAW = Large Area Swipe

RADIATION/CONTAMINATION SURVEY SUPPLEMENT

SURVEY NUMBER: HPS-PEPIPE-090810-017

SURVEYOR: R. Zahensky | LOCATION: Parcel E

Sample Number	Exposure Rate (µR/hr) Contact	Exposure Rate (µR/hr) 1 Meter	Fixed + Removable (NET) Gamma (cpm)	Fixed + Removable (NET) Alpha dpm/100cm2	Fixed + Removable (NET) Beta/Gamma dpm/100cm2	Removable (NET) Alpha dpm/100cm2	Removable (NET) Beta/Gamma dpm/100cm2	Sample ID
1			6084	12.00	-452.82	1.63	7.28	
2			4931	12.00	155.64	-0.60	5.18	
3			6334	3.11	186.51	3.86	-1.11	
4			4863	-5.78	98.32	-0.60	0.99	
5			6439	3.11	80.69	1.63	5.18	
6			6965	12.00	252.65	1.63	5.18	
7			6608	-5.78	164.46	1.63	5.18	
8			4976	7.56	204.14	-0.60	-3.21	
9			6483	7.56	283.51	-0.60	11.48	
10			5005	-1.33	129.19	1.63	3.08	
11			6644	-1.33	257.05	-0.60	3.08	
12			4806	-1.33	49.82	1.63	13.57	
13			6700	7.56	23.37	1.63	7.28	
14			5059	3.11	160.05	-0.60	9.38	
15			6790	16.45	292.33	-0.60	5.18	
16			4886	3.11	217.37	1.63	5.18	
17			6549	-1.33	301.15	-0.60	3.08	
18			4865	3.11	151.23	1.63	9.38	
19			6633	7.56	-95.68	-0.60	7.28	
20			4904	-1.33	212.96	1.63	3.08	
21			6683	-1.33	-100.09	-0.60	5.18	
22			6707	3.11	23.37	-0.60	-1.11	
23			4921	-1.33	138.01	1.63	5.18	
24			6380	16.45	45.41	1.63	0.99	
25			4862	-1.33	248.24	1.63	3.08	
26			6254	12.00	142.42	-0.60	-3.21	
27			4773	12.00	243.83	-0.60	-1.11	
28			6274	12.00	204.14	-0.60	13.57	
29			4773	3.11	-108.91	1.63	3.08	
30			4740	3.11	186.51	-0.60	0.99	
31			6274	12.00	-51.59	-0.60	7.28	
32			6274	3.11	23.37	-0.60	3.08	
33			6465	3.11	-51.59	-0.60	0.99	
34			4104	3.11	173.28	-0.60	-3.21	
35			6870	3.11	-11.90	-0.60	3.08	
36			4954	3.11	-95.68	-0.60	-1.11	

Reviewer: JKH

Items detected within are radiologically cleared for final disposition purposes — 9.10.10

SMEAR COUNTING ANALYSIS REPORT

ORIGINAL

COUNT DATE:	09/08/10	ANALYSIS PERFORMED BY:	A. Alexander
NWTS#:	HPS-PEPIPE-090810-017		
INSTRUMENT I.D.:	Protean WPC 9550	DETECTOR I.D.:	0615088
EFFICIENCIES: α:	14.93%	MDA: α: 11.05 dpm	Cal Due Date: 7/9/2011
βγ:	15.89%	βγ: 16.63 dpm	
SMEARS COLLECTED BY:	R. Zahensky		
SAMPLE COUNT TIME:	3 Minutes	ACTIVITY REPORT IN:	dpm/100cm²
α BACKGROUND:	0.09 CPM	βγ BACKGROUND:	0.51 CPM

Remarks: Pipe Survey Parcel E SW00452/SW00453/SW00454	GROSS COUNTS		NET COUNTS		NET ACTIVITY	
	α	βγ	α	βγ	α	βγ
Smear #1	1	6	0.24	1.16	1.63	7.28
Smear #2	0	4	-0.09	0.82	-0.60	5.18
Smear #3	2	1	0.58	-0.18	3.86	-1.11
Smear #4	0	2	-0.09	0.16	-0.60	0.99
Smear #5	1	4	0.24	0.82	1.63	5.18
Smear #6	1	4	0.24	0.82	1.63	5.18
Smear #7	1	4	0.24	0.82	1.63	5.18
Smear #8	0	0	-0.09	-0.51	-0.60	-3.21
Smear #9	0	7	-0.09	1.82	-0.60	11.48
Smear #10	1	3	0.24	0.49	1.63	3.08
Smear #11	0	3	-0.09	0.49	-0.60	3.08
Smear #12	1	8	0.24	2.16	1.63	13.57
Smear #13	1	5	0.24	1.16	1.63	7.28
Smear #14	0	6	-0.09	1.49	-0.60	9.38
Smear #15	0	4	-0.09	0.82	-0.60	5.18
Smear #16	1	4	0.24	0.82	1.63	5.18
Smear #17	0	3	-0.09	0.49	-0.60	3.08
Smear #18	1	6	0.24	1.49	1.63	9.38
Smear #19	0	5	-0.09	1.16	-0.60	7.28
Smear #20	1	3	0.24	0.49	1.63	3.08
Smear #21	0	4	-0.09	0.82	-0.60	5.18
Smear #22	0	1	-0.09	-0.18	-0.60	-1.11
Smear #23	1	4	0.24	0.82	1.63	5.18
Smear #24	1	2	0.24	0.16	1.63	0.99
Smear #25	1	3	0.24	0.49	1.63	3.08
Smear #26	0	0	-0.09	-0.51	-0.60	-3.21
Smear #27	0	1	-0.09	-0.18	-0.60	-1.11
Smear #28	0	8	-0.09	2.16	-0.60	13.57
Smear #29	1	3	0.24	0.49	1.63	3.08
Smear #30	0	2	-0.09	0.16	-0.60	0.99
Smear #31	0	5	-0.09	1.16	-0.60	7.28
Smear #32	0	3	-0.09	0.49	-0.60	3.08
Smear #33	0	2	-0.09	0.16	-0.60	0.99
Smear #34	0	0	-0.09	-0.51	-0.60	-3.21
Smear #35	0	3	-0.09	0.49	-0.60	3.08
Smear #36	0	1	-0.09	-0.18	-0.60	-1.11

Remarks:

Reviewed by: R. Kirby

Date: 9/9/10

NEW WORLD TECHNOLOGY FORM NWT-006 v2

RADIATION/CONTAMINATION SURVEY FORM

Date: 9/8/2010	Time: 11:00	INSTRUMENTATION USED						
		Model Inst/Det.	Serial Number	Calibration Due Date	Instrument % Efficiency	Total % Efficiency	MDC/MDA + (dpm/100cm2)	Background + (dpm/100cm2)
Survey Number: HPS-PEPIPE-090810-018		2360 43-68	193680 075160	3/4/2011	α 35.70%	α 8.93%	α 30.02	α 2.89
					βγ 36.00%	βγ 9.00%	βγ 234.99	βγ 615.21
Location: Parcel E		Protean	0815068	7/9/2011	α 59.72%	α 14.93%	α 10.25	α 0.40
					βγ 63.55%	βγ 15.89%	βγ 15.64	βγ 2.86
Surveyor: R. Zahensky								
Surveyor Signature:		2350-1 44-10	98617 211667	10/30/2010				5 Kcpm
Isotopes of Concern:: Ra-226; Cs-137; Sr-90		Static Count Time: 2 Minutes (2360)						
		Description: Parcel E/UC3 Pipe						

Pipe	Smear Number
03-E16-00-1H-38	1,2
03-E16-00-1H-39	3,4
03-E16-00-1H-40	5,6
03-E16-00-1H-41	7,8
03-E16-00-1H-42	9,10
03-E16-00-1H-43	11,12
03-E16-00-1H-44	13,14
03-E16-00-1H-45	15,16
03-E16-00-1H-46	17,18
03-E16-00-1H-47	19,20
03-E16-00-1H-48	21,22
03-E16-00-1H-49	23,24
03-E16-00-1H-50	25,26
03-E16-00-1H-51	27,28
03-E16-00-1H-52	29,30
03-E16-00-1H-53	31,32

Pipe	Smear Number
03-E16-00-1H-54	33,34
03-E16-00-1H-55	35,36

Comments

1) Accessible component surfaces (identified above by "Pipe" [Section ID] and "Smear Number") received preliminary LAWs followed by a detailed sample (scan and static survey) using Ludlum Meter/Dectector Models "2350-1 w/ 44-10" and "2360 w/ 43-68" or equivalent.
2) In addition to sample (survey) results documented within, LAWs did not indicate the presence of loose surface contaminants (α β γ).
3) Material surfaces corresponding to survey results within will be left intact as part of operationally active systems, components, and/or structures. ☐ YES ☒ NO

Legend

K = Thousands
LAW = Large Area Swipe

RADIATION/CONTAMINATION SURVEY SUPPLEMENT

SURVEY NUMBER: HPS-PEPIPE-090810-018

SURVEYOR: R. Zahensky | LOCATION: Parcel E

Sample Number	Exposure Rate (µR/hr) Contact	Exposure Rate (µR/hr) 1 Meter	Fixed + Removable (NET) Gamma (cpm)	Fixed + Removable (NET) Alpha dpm/100cm2	Fixed + Removable (NET) Beta/Gamma dpm/100cm2	Removable (NET) Alpha dpm/100cm2	Removable (NET) Beta/Gamma dpm/100cm2	Sample ID
1			6323	7.56	-7.50	4.06	1.24	
2			6977	12.00	199.74	1.83	-0.86	
3			6003	12.00	243.83	-0.40	-0.86	
4			4991	12.00	173.28	-0.40	1.24	
5			5053	-5.78	204.14	-0.40	3.34	
6			6090	3.11	111.55	1.83	1.24	
7			6012	3.11	257.05	-0.40	5.43	
8			6535	3.11	107.14	1.83	3.34	
9			6770	3.11	230.60	-0.40	-0.86	
10			6035	-1.33	14.55	-0.40	5.43	
11			6829	-1.33	32.19	-0.40	3.34	
12			5020	16.45	239.42	-0.40	-2.96	
13			6505	-1.33	380.51	-0.40	7.53	
14			4790	7.56	186.51	-0.40	-0.86	
15			6327	12.00	-33.95	1.83	-2.96	
16			4841	3.11	-135.36	-0.40	5.43	
17			6639	7.56	129.19	1.83	3.34	
18			4886	3.11	124.78	-0.40	20.12	
19			6568	7.56	138.01	1.83	5.43	
20			4942	3.11	283.51	-0.40	1.24	
21			6639	3.11	14.55	-0.40	-0.86	
22			4886	12.00	164.46	-0.40	-2.96	
23			6568	-1.33	-7.50	-0.40	-2.96	
24			4942	7.56	182.10	1.83	-2.96	
25			6387	3.11	115.96	1.83	3.34	
26			5009	16.45	190.92	-0.40	-2.96	
27			6260	16.45	-100.09	-0.40	7.53	
28			6282	16.45	142.42	-0.40	-0.86	
29			6744	-5.78	406.97	-0.40	-2.96	
30			6312	12.00	199.74	-0.40	3.34	
31			6908	-5.78	-29.54	1.83	-0.86	
32			5322	3.11	230.60	-0.40	-2.96	
33			6762	7.56	-3.09	-0.40	-0.86	
34			5188	-1.33	270.28	-0.40	-0.86	
35			6713	7.56	455.47	-0.40	-0.86	
36			5104	7.56	-108.91	-0.40	7.53	

Reviewer: JH

Items detained within the radiologically controlled area for final disposition purposes
9.14.10

SMEAR COUNTING ANALYSIS REPORT

ORIGINAL

COUNT DATE:	09/09/10	ANALYSIS PERFORMED BY:	A. Alexander
NWTS#:	HPS-PEPIPE-090810-018		
INSTRUMENT I.D.:	Protean WPC 9550	DETECTOR I.D.:	0815068
EFFICIENCIES: α:	14.93%	MDA: α: 10.25 dpm	Cal Due Date: 7/9/2011
βγ:	15.89%	βγ: 15.64 dpm	
SMEARS COLLECTED BY:	R. Zahensky		
SAMPLE COUNT TIME:	3 Minutes	ACTIVITY REPORT IN: dpm/100cm²	
α BACKGROUND: 0.06 CPM		βγ BACKGROUND: 0.47 CPM	

Remarks: Pipe Survey Parcel E SW00455/SW00456/SW00457	GROSS COUNTS		NET COUNTS		NET ACTIVITY	
	α	βγ	α	βγ	α	βγ
Smear #1	2	2	0.61	0.20	4.06	1.24
Smear #2	1	1	0.27	-0.14	1.83	-0.86
Smear #3	0	1	-0.06	-0.14	-0.40	-0.86
Smear #4	0	2	-0.06	0.20	-0.40	1.24
Smear #5	0	3	-0.06	0.53	-0.40	3.34
Smear #6	1	2	0.27	0.20	1.83	1.24
Smear #7	0	4	-0.06	0.86	-0.40	5.43
Smear #8	1	3	0.27	0.53	1.83	3.34
Smear #9	0	1	-0.06	-0.14	-0.40	-0.86
Smear #10	0	4	-0.06	0.86	-0.40	5.43
Smear #11	0	3	-0.06	0.53	-0.40	3.34
Smear #12	0	0	-0.06	-0.47	-0.40	-2.96
Smear #13	0	5	-0.06	1.20	-0.40	7.53
Smear #14	0	1	-0.06	-0.14	-0.40	-0.86
Smear #15	1	0	0.27	-0.47	1.83	-2.96
Smear #16	0	4	-0.06	0.86	-0.40	5.43
Smear #17	1	3	0.27	0.53	1.83	3.34
Smear #18	0	11	-0.06	3.20	-0.40	20.12
Smear #19	1	4	0.27	0.86	1.83	5.43
Smear #20	0	2	-0.06	0.20	-0.40	1.24
Smear #21	0	1	-0.06	-0.14	-0.40	-0.86
Smear #22	0	0	-0.06	-0.47	-0.40	-2.96
Smear #23	0	0	-0.06	-0.47	-0.40	-2.96
Smear #24	1	0	0.27	-0.47	1.83	-2.96
Smear #25	1	3	0.27	0.53	1.83	3.34
Smear #26	0	0	-0.06	-0.47	-0.40	-2.96
Smear #27	0	5	-0.06	1.20	-0.40	7.53
Smear #28	0	1	-0.06	-0.14	-0.40	-0.86
Smear #29	0	0	-0.06	-0.47	-0.40	-2.96
Smear #30	0	3	-0.06	0.53	-0.40	3.34
Smear #31	1	1	0.27	-0.14	1.83	-0.86
Smear #32	0	0	-0.06	-0.47	-0.40	-2.96
Smear #33	0	1	-0.06	-0.14	-0.40	-0.86
Smear #34	0	1	-0.06	-0.14	-0.40	-0.86
Smear #35	0	1	-0.06	-0.14	-0.40	-0.86
Smear #36	0	5	-0.06	1.20	-0.40	7.53

Remarks:

Reviewed by: R. Heaty

Date: 9/10/10

NEW WORLD TECHNOLOGY FORM NWT-056 v2

RADIATION/CONTAMINATION SURVEY FORM

Date: 9/8/2010 Time: 13:20	INSTRUMENTATION USED						
	Model Inst/Det.	Serial Number	Calibration Due Date	Instrument % Efficiency	Total % Efficiency	MDC/MDA * (dpm/100cm2)	Background * (dpm/100cm2)
Survey Number: HPS-PEPIPE-090810-019	2360	193680	3/4/2011	α 35.70%	α 8.93%	α 30.02	α 2.89
	43-68	075150		βγ 36.00%	βγ 9.00%	βγ 234.99	βγ 515.21
Location: Parcel E	Protean	0615068	7/9/2011	α 59.72%	α 14.93%	α 10.25	α 0.40
				βγ 63.55%	βγ 15.89%	βγ 15.64	βγ 2.96
Surveyor: R. Zahensky							
Surveyor Signature:	2350-1	98617	10/30/2010				5
	44-10	211667					Kcpm
Isotopes of Concern:: Ra-226; Cs-137; Sr-90	Static Count Time: 2 Minutes (2360)						
	Description: Parcel E/UC3 Pipe						

Pipe	Smear Number
03-E16-00-1H-56	1,2
03-E16-00-1H-57	3,4
03-E16-00-1H-58	5,6
03-E16-00-1H-59	7,8
03-E16-00-1H-60	9,10
03-E16-00-1H-61	11,12
03-E16-00-1H-62	13,14
03-E16-00-1H-63	15,16
03-E16-00-1H-64	17,18
03-E16-00-1H-65	19,20
03-E16-00-1H-66	21,22
03-E16-00-1H-67	23,24
03-E16-00-1H-68	25,26
03-E16-00-1H-69	27,28
03-E16-00-1H-70	29,30
03-E16-00-1H-71	31,32

Pipe	Smear Number
03-E16-00-1H-72	33,34
03-E16-00-1H-73	35,36

Comments

1) Accessible component surfaces (identifed above by "Pipe" [Section ID] and "Smear Number") received preliminary LAW's followed by a detailed sample (scan and static survey) using Ludlum Meter/Dectector Models "2350-1 w/ 44-10" and "2360 w/ 43-68" or equivalent.
2) In addition to sample (survey) results documented within, LAW's did not indicate the presence of loose surface contaminants (α β γ).
3) Material surfaces corresponding to survey results within will be left intact as part of operationally active systems, componets, and/or structures. ☐ YES ☑ NO

Legend

K = Thousands
LAW = Large Area Swipe

RADIATION/CONTAMINATION SURVEY SUPPLEMENT

SURVEY NUMBER: HPS-PEPIPE-090810-019

SURVEYOR: R. Zahensky | LOCATION: Parcel E

Sample Number	Exposure Rate (µR/hr)		Fixed + Removable (NET)			Removable (NET)		Sample ID
	Contact	1 Meter	Gamma (cpm)	Alpha dpm/100cm2	Beta/Gamma dpm/100cm2	Alpha dpm/100cm2	Beta/Gamma dpm/100cm2	
1			6748	-5.78	98.32	-0.40	-0.86	
2			5246	12.00	160.05	-0.40	7.53	
3			6924	-5.78	-3.09	1.83	-2.96	
4			6197	7.56	-78.04	-0.40	1.24	
5			7261	3.11	63.05	-0.40	-2.96	
6			5136	3.11	252.65	4.06	1.24	
7			6973	12.00	-148.59	1.83	1.24	
8			5204	12.00	332.01	-0.40	5.43	
9			6758	-5.78	36.60	-0.40	5.43	
10			5189	-5.78	164.46	-0.40	7.53	
11			7020	3.11	45.41	-0.40	-2.96	
12			5047	7.56	327.60	-0.40	3.34	
13			7082	16.45	80.69	-0.40	5.43	
14			5098	7.56	182.10	-0.40	1.24	
15			6812	3.11	23.37	1.83	1.24	
16			4764	-5.78	248.24	-0.40	7.53	
17			6528	-1.33	1.32	-0.40	1.24	
18			5053	3.11	221.78	1.83	9.63	
19			6929	12.00	402.56	-0.40	-0.86	
20			5039	-1.33	142.42	-0.40	1.24	
21			6838	7.56	10.14	1.83	-0.86	
22			5084	-1.33	226.19	6.30	15.92	
23			6212	12.00	124.78	-0.40	3.34	
24			5059	-5.78	212.96	-0.40	-0.86	
25			6284	3.11	-100.09	-0.40	1.24	
26			5144	-1.33	133.60	-0.40	-2.86	
27			6577	7.56	186.51	1.83	1.24	
28			4819	-5.78	195.33	-0.40	9.63	
29			6895	3.11	115.96	-0.40	7.53	
30			5144	-1.33	199.74	-0.40	5.43	
31			6579	-1.33	-91.27	-0.40	1.24	
32			4926	-1.33	221.78	-0.40	3.34	
33			6747	7.56	265.87	-0.40	3.34	
34			5242	-1.33	243.83	1.83	7.53	
35			6864	3.11	58.64	1.83	-0.86	
36			4974	3.11	173.28	-0.40	-2.96	

Reviewer: JH

Items dated within are radiologically cleared for final disposition purposes — 9.14.10

SMEAR COUNTING ANALYSIS REPORT

ORIGINAL

COUNT DATE:	09/08/10	ANALYSIS PERFORMED BY:	A. Alexander
NWTS#:	HPS-PSPIPE-000810-019		
INSTRUMENT I.D.:	Protean WPC 9550	DETECTOR I.D.:	0515068
EFFICIENCIES: α:	14.93%	MDA: α: 10.25 dpm	Cal Due Date: 7/8/2011
βγ:	15.89%	βγ: 15.64 dpm	
SMEARS COLLECTED BY:	R. Zabensky		
SAMPLE COUNT TIME:	3 Minutes	ACTIVITY REPORT IN:	dpm/100cm²
α BACKGROUND:	0.06 CPM	βγ BACKGROUND:	0.47 CPM

Remarks: Pipe Survey Parcel E SW00458, SW00459, SW00460

	GROSS COUNTS		NET COUNTS		NET ACTIVITY	
	α	βγ	α	βγ	α	βγ
Smear #1	0	1	-0.06	-0.14	-0.40	-0.86
Smear #2	0	5	-0.06	1.20	-0.40	7.53
Smear #3	1	0	0.27	-0.47	1.83	-2.96
Smear #4	0	2	-0.06	0.20	-0.40	1.24
Smear #5	0	0	-0.06	-0.47	-0.40	-2.96
Smear #6	2	2	0.61	0.20	4.06	1.24
Smear #7	1	2	0.27	0.20	1.83	1.24
Smear #8	0	4	-0.06	0.86	-0.40	5.43
Smear #9	0	4	-0.06	0.86	-0.40	5.43
Smear #10	0	5	-0.06	1.20	-0.40	7.53
Smear #11	0	0	-0.06	-0.47	-0.40	-2.96
Smear #12	0	3	-0.06	0.53	-0.40	3.34
Smear #13	0	4	-0.06	0.86	-0.40	5.43
Smear #14	0	2	-0.06	0.20	-0.40	1.24
Smear #15	1	2	0.27	0.20	1.83	1.24
Smear #16	0	5	-0.06	1.20	-0.40	7.53
Smear #17	0	2	-0.06	0.20	-0.40	1.24
Smear #18	1	8	0.27	1.53	1.83	9.63
Smear #19	0	1	-0.06	-0.14	-0.40	-0.86
Smear #20	0	2	-0.06	0.20	-0.40	1.24
Smear #21	1	1	0.27	-0.14	1.83	-0.86
Smear #22	3	9	0.94	2.53	6.30	15.92
Smear #23	0	3	-0.06	0.53	-0.40	3.34
Smear #24	0	1	-0.06	-0.14	-0.40	-0.86
Smear #25	0	2	-0.06	0.20	-0.40	1.24
Smear #26	0	0	-0.06	-0.47	-0.40	-2.96
Smear #27	1	2	0.27	0.20	1.83	1.24
Smear #28	0	8	-0.06	1.53	-0.40	9.63
Smear #29	0	5	-0.06	1.20	-0.40	7.53
Smear #30	0	4	-0.06	0.86	-0.40	5.43
Smear #31	0	2	-0.06	0.20	-0.40	1.24
Smear #32	0	3	-0.06	0.53	-0.40	3.34
Smear #33	0	3	-0.06	0.53	-0.40	3.34
Smear #34	1	5	0.27	1.20	1.83	7.53
Smear #35	1	1	0.27	-0.14	1.83	-0.86
Smear #36	0	0	-0.06	-0.47	-0.40	-2.96

Remarks:

Reviewed by: R. Stutzy

Date: 9/14/10

NEW WORLD TECHNOLOGY FORM NWT-006 v2

RADIATION/CONTAMINATION SURVEY FORM

Date: 9/9/2010 Time: 8:00	INSTRUMENTATION USED						
	Model Inst/Det.	Serial Number	Calibration Due Date	Instrument % Efficiency	Total % Efficiency	MDC/MDA + (dpm/100cm2)	Background + (dpm/100cm2)
Survey Number: HPS-PEPIPE-090910-020	2360	193680	3/4/2011	α 35.70%	α 8.93%	α 34.54	α 4.67
	43-68	075150		βγ 36.00%	βγ 9.00%	βγ 239.54	βγ 536.60
Location: Parcel E	Protean	0615068	7/9/2011	α 59.72%	α 14.93%	α 9.60	α 0.27
				βγ 63.55%	βγ 15.89%	βγ 16.85	βγ 3.78
Surveyor: R. Zahensky							
Surveyor Signature:	2350-1	98617	10/30/2010				6
	44-10	211667					Kcpm
Isotopes of Concern:: Ra-226; Cs-137; Sr-90	Static Count Time: 2 Minutes (2360)						
	Description: Parcel E/UC3 Pipe						

Pipe	Smear Number
03-E16-00-1F-01	1,2
03-E16-00-1F-02	3,4
03-E16-00-1F-03	5,6
03-E16-00-1F-04	7,8
03-E16-00-1F-05	9,10
03-E16-00-1F-06	11,12
03-E16-00-1F-07	13,14
03-E16-00-1F-08	15,16
03-E16-00-1F-09	17,18
03-E16-00-1F-10	19,20
03-E16-00-1F-11	21,22
03-E16-00-1F-12	23,24
03-E16-00-1F-13	25,26
03-E16-00-1F-14	27,28
03-E16-00-1F-15	29,30
03-E16-00-1F-16	31,32

Pipe	Smear Number
03-E16-00-1F-17	33,34
03-E16-00-1F-18	35,36

Comments

1) Accessible component surfaces (identifed above by "Pipe" [Section ID] and "Smear Number") received preliminary LAWs followed by a detailed sample (scan and static survey) using Ludlum Meter/Dectector Models "2350-1 w/ 44-10" and "2360 w/ 43-68" or equivalent.
2) In addition to sample (survey) results documented within, LAWs did not indicate the presence of loose surface contaminants (α β γ).
3) Material surfaces corresponding to survey results within will be left intact as part of operationally active systems, componets, and/or structures. ☐ YES ☒ NO

Legend

K = Thousands
LAW = Large Area Swipe

RADIATION/CONTAMINATION SURVEY SUPPLEMENT

SURVEY NUMBER: HPS-PEPIPE-090910-020

SURVEYOR: R. Zahensky | LOCATION: Parcel E

Sample Number	Exposure Rate (µR/hr)		Fixed + Removable (NET)			Removable (NET)		Sample ID
	Contact	1 Meter	Gamma (cpm)	Alpha dpm/100cm2	Beta/Gamma dpm/100cm2	Alpha dpm/100cm2	Beta/Gamma dpm/100cm2	
1			5748	-0.44	170.19	-0.27	-1.68	
2			4714	8.45	-28.22	-0.27	4.62	
3			5997	-0.44	240.74	-0.27	2.52	
4			4759	12.89	29.10	4.20	2.52	
5			6463	-9.34	152.56	-0.27	6.71	
6			4904	4.00	46.74	-0.27	8.81	
7			6785	4.00	-178.13	-0.27	0.42	
8			4940	-0.44	82.01	-0.27	8.81	
9			6332	12.89	-59.08	-0.27	8.81	
10			4807	8.45	-156.08	-0.27	2.52	
11			4800	12.89	183.42	-0.27	-1.68	
12			5222	-9.34	42.33	-0.27	0.42	
13			4862	4.00	121.69	-0.27	0.42	
14			4739	-4.89	161.38	-0.27	6.71	
15			6358	-4.89	15.87	1.96	0.42	
16			5158	-0.44	121.69	-0.27	-1.68	
17			6330	-0.44	152.56	-0.27	2.52	
18			7066	-0.44	-41.45	-0.27	6.71	
19			5016	-0.44	214.20	-0.27	4.62	
20			5254	-0.44	-98.77	1.96	2.52	
21			6358	-9.34	-59.08	-0.27	0.42	
22			5178	4.00	205.47	-0.27	8.81	
23			6330	-9.34	231.92	1.96	-1.68	
24			5254	12.89	143.74	-0.27	-3.78	
25			7066	12.89	231.92	-0.27	-1.68	
26			5155	-0.44	82.01	-0.27	2.52	
27			6676	4.00	227.51	1.96	-3.78	
28			5016	-0.44	192.24	-0.27	4.62	
29			6733	4.00	-178.13	-0.27	6.71	
30			5038	4.00	165.78	1.96	8.81	
31			6428	-4.89	280.42	-0.27	2.52	
32			4939	-4.89	104.06	-0.27	4.62	
33			7247	-0.44	77.60	-0.27	2.52	
34			5199	8.45	192.24	-0.27	0.42	
35			7125	-0.44	-94.36	-0.27	2.52	
36			4946	-0.44	253.97	-0.27	10.91	

Reviewer: JTA

Items found within are radiologically cleared for free disposal purposes — 9-15-13

SMEAR COUNTING ANALYSIS REPORT

ORIGINAL

COUNT DATE:	09/10/10	ANALYSIS PERFORMED BY:	A. Alexander
NWTS#:	HPS-PEPIPE-090910-020		
INSTRUMENT I.D.:	Protean WPC 9550	DETECTOR I.D.:	0616068
EFFICIENCIES: α:	14.93%	MDA: α: 9.60 dpm	Cal Due Date: 7/9/2011
βγ:	15.89%	βγ: 16.85 dpm	
SMEARS COLLECTED BY:	R. Zabensky		
SAMPLE COUNT TIME:	3 Minutes	ACTIVITY REPORT IN:	dpm/100cm²
α BACKGROUND:	0.04 CPM	βγ BACKGROUND:	0.60 CPM

Remarks: Pipe Survey Parcel E SW00461/ SW00462/ SW00463

	GROSS COUNTS		NET COUNTS		NET ACTIVITY	
	α	βγ	α	βγ	α	βγ
Smear #1	0	1	-0.04	-0.27	-0.27	-1.68
Smear #2	0	4	-0.04	0.73	-0.27	4.62
Smear #3	0	3	-0.04	0.40	-0.27	2.52
Smear #4	2	3	0.63	0.40	4.20	2.52
Smear #5	0	5	-0.04	1.07	-0.27	6.71
Smear #6	0	6	-0.04	1.40	-0.27	8.81
Smear #7	0	2	-0.04	0.07	-0.27	0.42
Smear #8	0	6	-0.04	1.40	-0.27	8.81
Smear #9	0	6	-0.04	1.40	-0.27	8.81
Smear #10	0	3	-0.04	0.40	-0.27	2.52
Smear #11	0	1	-0.04	-0.27	-0.27	-1.68
Smear #12	0	2	-0.04	0.07	-0.27	0.42
Smear #13	0	2	-0.04	0.07	-0.27	0.42
Smear #14	0	5	-0.04	1.07	-0.27	6.71
Smear #15	1	2	0.29	0.07	1.96	0.42
Smear #16	0	1	-0.04	-0.27	-0.27	-1.68
Smear #17	0	3	-0.04	0.40	-0.27	2.52
Smear #18	0	5	-0.04	1.07	-0.27	6.71
Smear #19	0	4	-0.04	0.73	-0.27	4.62
Smear #20	1	3	0.29	0.40	1.96	2.52
Smear #21	0	2	-0.04	0.07	-0.27	0.42
Smear #22	0	6	-0.04	1.40	-0.27	8.81
Smear #23	1	1	0.29	-0.27	1.96	-1.68
Smear #24	0	0	-0.04	-0.60	-0.27	-3.78
Smear #25	0	1	-0.04	-0.27	-0.27	-1.68
Smear #26	0	3	-0.04	0.40	-0.27	2.52
Smear #27	1	0	0.29	-0.60	1.96	-3.78
Smear #28	0	4	-0.04	0.73	-0.27	4.62
Smear #29	0	5	-0.04	1.07	-0.27	6.71
Smear #30	1	6	0.29	1.40	1.96	8.81
Smear #31	0	3	-0.04	0.40	-0.27	2.52
Smear #32	0	4	-0.04	0.73	-0.27	4.62
Smear #33	0	3	-0.04	0.40	-0.27	2.52
Smear #34	0	2	-0.04	0.07	-0.27	0.42
Smear #35	0	3	-0.04	0.40	-0.27	2.52
Smear #36	0	7	-0.04	1.73	-0.27	10.91

Remarks:

Reviewed by: R. Stutz

Date: 9/13/10

NEW WORLD TECHNOLOGY FORM NWT-009 v2

RADIATION/CONTAMINATION SURVEY FORM

Date: 9/9/2010	Time: 12:30	INSTRUMENTATION USED						
		Model Inst/Det.	Serial Number	Calibration Due Date	Instrument % Efficiency	Total % Efficiency	MDC/MDA + (dpm/100cm2)	Background + (dpm/100cm2)
Survey Number: HPS-PEPIPE-090910-021		2360	193680	3/4/2011	α 35.70%	α 8.93%	α 34.54	α 4.67
		43-68	075150		βγ 36.00%	βγ 9.00%	βγ 239.54	βγ 536.60
Location: Parcel E		Protean	0615068	7/9/2011	α 59.72%	α 14.93%	α 9.60	α 0.27
					βγ 63.55%	βγ 15.89%	βγ 16.85	βγ 3.78
Surveyor: R. Zahensky								
Surveyor Signature:		2350-1	98617	10/30/2010				6
		44-10	211667					Kcpm
Isotopes of Concern: Ra-226; Cs-137; Sr-90		Static Count Time: 2 Minutes (2360)						
		Description: Parcel E/UC3 Pipe						

Pipe	Smear Number
03-E16-00-1F-19	1,2
03-E16-00-1F-20	3,4
03-E16-00-1F-21	5,6
03-E16-00-1F-22	7,8
03-E16-00-1F-23	9,10
03-E16-00-1F-24	11,12
03-E16-00-1F-25	13,14
03-E16-00-1F-26	15,16
03-E16-00-1F-27	17,18
03-E16-00-1F-28	19,20
03-E16-00-1F-29	21,22
03-E16-00-1F-30	23,24
03-E16-00-1F-31	25,26
03-E16-00-1F-32	27,28
03-E16-00-1F-33	29,30
03-E16-00-1F-34	31,32

Pipe	Smear Number
03-E16-00-1F-35	33,34
03-E16-00-1F-36	35,36

Comments

1) Accessible component surfaces (identifed above by "Pipe" [Section ID] and "Smear Number") received preliminary LAW's followed by a detailed sample (scan and static survey) using Ludlum Meter/Dectector Models "2350-1 w/ 44-10" and "2360 w/ 43-68" or equivalent.
2) In addition to sample (survey) results documented within, LAW's did not indicate the presence of loose surface contaminants (α β γ).
3) Material surfaces corresponding to survey results within will be left intact as part of operationally active systems, componets, and/or structures. ☐ YES ☒ NO

Legend

K = Thousands
LAW = Large Area Swipe

RADIATION/CONTAMINATION SURVEY SUPPLEMENT

SURVEY NUMBER: HPS-PEPIPE-090910-021

SURVEYOR: R. Zahensky

LOCATION: Parcel E

Sample Number	Exposure Rate (µR/hr)		Fixed + Removable (NET)			Removable (NET)		Sample ID
	Contact	1 Meter	Gamma (cpm)	Alpha dpm/100cm2	Beta/Gamma dpm/100cm2	Alpha dpm/100cm2	Beta/Gamma dpm/100cm2	
1				-0.44	-160.49	-0.27	6.71	
2				8.45	223.10	-0.27	-3.78	
3				8.45	-89.95	-0.27	4.62	
4				8.45	174.60	-0.27	-1.68	
5				-0.44	59.85	-0.27	0.42	
6				-0.44	245.15	1.96	2.52	
7				4.00	-45.86	-0.27	10.91	
8				8.45	-98.77	-0.27	-3.78	
9				8.45	-63.49	1.95	-1.68	
10				8.45	-89.95	-0.27	4.62	
11				-9.34	-160.49	-0.27	6.71	
12				8.45	112.87	-0.27	-1.68	
13				12.89	231.92	-0.27	4.62	
14				8.45	-72.31	-0.27	-1.68	
15				-0.44	42.33	6.43	4.62	
16				4.00	-147.27	-0.27	0.42	
17				-9.34	2.65	-0.27	0.42	
18				4.00	289.24	-0.27	4.62	
19				8.45	37.92	-0.27	-1.68	
20				12.89	-72.31	-0.27	-1.68	
21				12.89	249.56	-0.27	0.42	
22				8.45	-186.95	-0.27	6.71	
23				-0.44	64.37	1.96	0.42	
24				8.45	258.38	-0.27	15.11	
25				4.00	-45.86	-0.27	8.81	
26				4.00	-94.36	-0.27	-1.68	
27				8.45	117.28	1.95	0.42	
28				4.00	-142.86	-0.27	2.62	
29				4.00	-45.86	1.96	-3.78	
30				8.45	-160.49	1.96	0.42	
31				-4.89	170.19	-0.27	8.81	
32				4.00	-67.90	-0.27	4.62	
33				-4.89	42.33	-0.27	-1.68	
34				-4.89	-164.90	-0.27	0.42	
35				-4.89	174.60	-0.27	6.71	
36				8.45	-151.68	-0.27	0.42	

Reviewer: JA

Items labeled within are radiologically cleared for final disposition purposes — 9-14-10

SMEAR COUNTING ANALYSIS REPORT

ORIGINAL

COUNT DATE:	09/10/10	ANALYSIS PERFORMED BY:	A. Alexander
NWTS#:	HPS-PEPIPE-090910-021		
INSTRUMENT I.D.:	Protean WPC 9550	DETECTOR I.D.:	0815068
EFFICIENCIES: α:	14.93%	MDA: α: 9.60 dpm	Cal Due Date: 7/9/2011
βγ:	15.89%	βγ: 16.85 dpm	
SMEARS COLLECTED BY:	R. Zahensky		
SAMPLE COUNT TIME:	3 Minutes	ACTIVITY REPORT IN:	dpm/100cm²
α BACKGROUND:	0.04 CPM	βγ BACKGROUND:	0.60 CPM

Remarks: Pipe Survey Parcel E SW00464/ SW00465/ SW00466

	GROSS COUNTS		NET COUNTS		NET ACTIVITY	
	α	βγ	α	βγ	α	βγ
Smear #1	0	5	-0.04	1.07	-0.27	6.71
Smear #2	0	0	-0.04	-0.60	-0.27	-3.78
Smear #3	0	4	-0.04	0.73	-0.27	4.62
Smear #4	0	1	-0.04	-0.27	-0.27	-1.68
Smear #5	0	2	-0.04	0.07	-0.27	0.42
Smear #6	1	3	0.29	0.40	1.96	2.52
Smear #7	0	7	-0.04	1.73	-0.27	10.91
Smear #8	0	0	-0.04	-0.60	-0.27	-3.78
Smear #9	1	1	0.29	-0.27	1.96	-1.68
Smear #10	0	4	-0.04	0.73	-0.27	4.62
Smear #11	0	5	-0.04	1.07	-0.27	6.71
Smear #12	0	1	-0.04	-0.27	-0.27	-1.68
Smear #13	0	4	-0.04	0.73	-0.27	4.62
Smear #14	0	1	-0.04	-0.27	-0.27	-1.68
Smear #15	3	4	0.96	0.73	6.43	4.62
Smear #16	0	2	-0.04	0.07	-0.27	0.42
Smear #17	0	2	-0.04	0.07	-0.27	0.42
Smear #18	0	4	-0.04	0.73	-0.27	4.62
Smear #19	0	1	-0.04	-0.27	-0.27	-1.68
Smear #20	0	1	-0.04	-0.27	-0.27	-1.68
Smear #21	0	2	-0.04	0.07	-0.27	0.42
Smear #22	0	5	-0.04	1.07	-0.27	6.71
Smear #23	1	2	0.29	0.07	1.96	0.42
Smear #24	0	9	-0.04	2.40	-0.27	15.11
Smear #25	0	6	-0.04	1.40	-0.27	8.81
Smear #26	0	1	-0.04	-0.27	-0.27	-1.68
Smear #27	1	2	0.29	0.07	1.96	0.42
Smear #28	0	3	-0.04	0.40	-0.27	2.52
Smear #29	1	0	0.29	-0.60	1.96	-3.78
Smear #30	1	2	0.29	0.07	1.96	0.42
Smear #31	0	6	-0.04	1.40	-0.27	8.81
Smear #32	0	4	-0.04	0.73	-0.27	4.62
Smear #33	0	1	-0.04	-0.27	-0.27	-1.68
Smear #34	0	2	-0.04	0.07	-0.27	0.42
Smear #35	0	5	-0.04	1.07	-0.27	6.71
Smear #36	0	2	-0.04	0.07	-0.27	0.42

Remarks:

Reviewed by: R. Stoddy

Date: 9/13/10

NEW WORLD TECHNOLOGY FORM NWT-005 v2

RADIATION/CONTAMINATION SURVEY FORM

Date: 10/11/2010	Time: 9:00	INSTRUMENTATION USED						
		Model Inst/Det.	Serial Number	Calibration Due Date	Instrument % Efficiency	Total % Efficiency	MDC/MDA + (dpm/100cm2)	Background + (dpm/100cm2)
Survey Number: HPS-PEPIPE-101110-022		2360 43-68	202415 094819	10/1/2011	α 26.00% βγ 34.50%	α 6.50% βγ 8.63%	α 45.26 βγ 280.62	α 5.49 βγ 714.75
Location: Parcel E		Protean	0615066	7/9/2011	α 59.72% βγ 63.55%	α 14.93% βγ 15.89%	α 10.80 βγ 15.02	α 0.54 βγ 2.58
Surveyor: R. Zahensky								
Surveyor Signature:		2350-1 44-10	129430 012176	5/12/2011				6 Kcpm
Isotopes of Concern:: Ra-226; Cs-137; Sr-90		Static Count Time: 2 Minutes (2360)						
		Description: Parcel E/UC3 Pipe						

Pipe	Smear Number
03-E16-00-1H-75	1,2
03-E16-00-1H-76	3,4
03-E16-00-1H-77	5,6
03-E16-00-1H-78	7,8
03-E16-00-1H-79	9,10
03-E16-00-1H-80	11,12
03-E16-00-1H-81	13,14
03-E16-00-1H-82	15,16
03-E16-00-1H-83	17,18
03-E16-00-1H-84	19,20
03-E16-00-1H-85	21,22
03-E16-00-1H-86	23,24
03-E16-00-1H-87	25,26
03-E16-00-1H-88	27,28
03-E16-00-1H-89	29,30
03-E16-00-1H-90	31,32

Pipe	Smear Number
03-E16-00-1H-91	33,34
03-E16-00-1H-92	35,36

Comments

1) Accessible component surfaces (identifed above by "Pipe" [Section ID] and "Smear Number") received preliminary LAW's followed by a detailed sample (scan and static survey) using Ludlum Meter/Dectector Models "2350-1 w/ 44-10" and "2360 w/ 43-68" or equivalent.
2) In addition to sample (survey) results documented within, LAW's did not indicate the presence of loose surface contaminants (α β γ).
3) Material surfaces corresponding to survey results within will be left intact as part of operationally active systems, componets, and/or structures. ☐ YES ☒ NO

Legend

K = Thousands
LAW = Large Area Swipe

RADIATION/CONTAMINATION SURVEY SUPPLEMENT

SURVEY NUMBER: HPS-PEPIPE-101110-022

SURVEYOR: R. Zahensky | LOCATION: Parcel E

Sample Number	Exposure Rate (µR/hr) Contact	Exposure Rate (µR/hr) 1 Meter	Fixed + Removable (NET) Gamma (cpm)	Fixed + Removable (NET) Alpha dpm/100cm2	Fixed + Removable (NET) Beta/Gamma dpm/100cm2	Removable (NET) Alpha dpm/100cm2	Removable (NET) Beta/Gamma dpm/100cm2	Sample ID
1			6323	13.43	203.82	1.70	5.81	
2			5179	13.43	102.60	-0.54	12.11	
3			6417	19.54	240.63	-0.54	-0.48	
4			5241	13.43	84.20	-0.54	1.62	
5			6339	7.33	392.45	-0.54	-0.48	
6			5102	13.43	-164.25	-0.54	5.81	
7			6823	13.43	406.26	1.70	-0.48	
8			5277	19.54	-35.43	-0.54	5.81	
9			6817	1.22	231.42	1.70	5.81	
10			5089	7.33	263.63	-0.54	-2.58	
11			6694	13.43	194.62	-0.54	1.62	
12			5335	-4.88	-40.03	-0.54	12.11	
13			6782	13.43	33.59	1.70	-0.48	
14			5246	1.22	-63.03	-0.54	7.91	
15			6791	1.22	245.23	-0.54	1.62	
16			5191	1.22	383.25	-0.54	1.62	
17			6507	13.43	-58.43	1.70	22.60	
18			5528	13.43	-297.68	-0.54	1.62	
19			6592	7.33	125.60	1.70	5.81	
20			5223	13.43	-256.27	-0.54	-0.48	
21			6312	7.33	-58.43	-0.54	-0.48	
22			5277	13.43	180.81	1.70	5.81	
23			6610	13.43	176.21	-0.54	12.11	
24			5330	7.33	88.80	-0.54	12.11	
25			6373	7.33	-127.44	-0.54	14.20	
26			5162	1.22	70.39	-0.54	10.01	
27			6479	19.54	74.99	1.70	7.91	
28			5410	13.43	231.42	-0.54	5.81	
29			6178	13.43	171.61	-0.54	-2.58	
30			5220	1.22	199.22	-0.54	10.01	
31			6149	13.43	-164.25	1.70	1.62	
32			5355	19.54	-302.28	-0.54	-2.58	
33			7023	19.54	-283.87	-0.54	12.11	
34			5219	1.22	190.02	-0.54	-0.48	
35			6243	1.22	-127.44	-0.54	5.81	
36			5701	13.43	-21.62	-0.54	10.01	

Reviewer: Items detected within are radiologically cleared for final disposition purposes - 10-13-10

ORIGINAL

SMEAR COUNTING ANALYSIS REPORT

COUNT DATE:	10/11/10	ANALYSIS PERFORMED BY:	A. Alexander
NWTS#:	HPS-PEPIPE-101110-022		
INSTRUMENT I.D.:	Protean WPC 9550	DETECTOR I.D.:	0616068
EFFICIENCIES: α:	14.93%	MDA: α: 10.80 dpm	Cal Due Date: 7/9/2011
βγ:	15.89%	βγ: 15.02 dpm	
SMEARS COLLECTED BY:	R. Zahensky		
SAMPLE COUNT TIME:	3 Minutes	ACTIVITY REPORT IN:	dpm/100cm²
α BACKGROUND:	0.08 CPM	βγ BACKGROUND:	0.41 CPM

Remarks: Pipe Survey Parcel E SW00467/ SW00468/ SW00469

	GROSS COUNTS		NET COUNTS		NET ACTIVITY	
	α	βγ	α	βγ	α	βγ
Smear #1	1	4	0.25	0.92	1.70	5.81
Smear #2	0	7	-0.08	1.92	-0.54	12.11
Smear #3	0	1	-0.08	-0.08	-0.54	-0.48
Smear #4	0	2	-0.08	0.26	-0.54	1.62
Smear #5	0	1	-0.08	-0.08	-0.54	-0.48
Smear #6	0	4	-0.08	0.92	-0.54	5.81
Smear #7	1	1	0.25	-0.08	1.70	-0.48
Smear #8	0	4	-0.08	0.92	-0.54	5.81
Smear #9	1	4	0.25	0.92	1.70	5.81
Smear #10	0	0	-0.08	-0.41	-0.54	-2.58
Smear #11	0	2	-0.08	0.26	-0.54	1.62
Smear #12	0	7	-0.08	1.92	-0.54	12.11
Smear #13	1	1	0.25	-0.08	1.70	-0.48
Smear #14	0	5	-0.08	1.26	-0.54	7.91
Smear #15	0	2	-0.08	0.26	-0.54	1.62
Smear #16	0	2	-0.08	0.26	-0.54	1.62
Smear #17	1	12	0.25	3.59	1.70	22.60
Smear #18	0	2	-0.08	0.26	-0.54	1.62
Smear #19	1	4	0.25	0.92	1.70	5.81
Smear #20	0	1	-0.08	-0.08	-0.54	-0.48
Smear #21	0	1	-0.08	-0.08	-0.54	-0.48
Smear #22	1	4	0.25	0.92	1.70	5.81
Smear #23	0	7	-0.08	1.92	-0.54	12.11
Smear #24	0	7	-0.08	1.92	-0.54	12.11
Smear #25	0	9	-0.08	2.26	-0.54	14.20
Smear #26	0	8	-0.08	1.59	-0.54	10.01
Smear #27	1	5	0.25	1.26	1.70	7.91
Smear #28	0	4	-0.08	0.92	-0.54	5.81
Smear #29	0	0	-0.08	-0.41	-0.54	-2.58
Smear #30	0	8	-0.08	1.59	-0.54	10.01
Smear #31	1	2	0.25	0.26	1.70	1.62
Smear #32	0	0	-0.08	-0.41	-0.54	-2.58
Smear #33	0	7	-0.08	1.92	-0.54	12.11
Smear #34	0	1	-0.08	-0.08	-0.54	-0.48
Smear #35	0	4	-0.08	0.92	-0.54	5.81
Smear #36	0	6	-0.08	1.59	-0.54	10.01

Remarks:

Reviewed by: Date: 10/12/10

NEW WORLD TECHNOLOGY FORM NWT-008 v2

RADIATION/CONTAMINATION SURVEY FORM

Date: 10/12/2010 Time: 9:00	INSTRUMENTATION USED						
	Model Inst/Det.	Serial Number	Calibration Due Date	Instrument % Efficiency	Total % Efficiency	MDC/MDA + (dpm/100cm2)	Background + (dpm/100cm2)
Survey Number: HPS-PEPIPE-101210-023	2360	202415	10/1/2011	α 26.00%	α 6.50%	α 42.91	α 4.58
	43-68	094819		βγ 34.50%	βγ 8.63%	βγ 277.03	βγ 695.65
Location: Parcel E	Protean	0515068	7/9/2011	α 59.72%	α 14.93%	α 9.60	α 0.27
				βγ 63.55%	βγ 15.89%	βγ 16.50	βγ 3.52
Surveyor: R. Zahensky							
Surveyor Signature:	2350-1	203445	3/5/2011				6
	44-10	183439					Kcpm
Isotopes of Concern: Ra-226; Cs-137; Sr-90	Static Count Time: 2 Minutes (2360)						
	Description: Parcel E/UC3 Pipe						

Pipe	Smear Number
03-E16-00-1H-93	1,2
03-E16-00-1H-94	3,4
03-E16-00-1H-95	5,6
03-E16-00-1H-96	7,8
03-E16-00-1H-97	9,10
03-E16-00-1H-98	11,12
03-E16-00-1H-99	13,14
03-E16-00-1H-100	15,16
03-E16-00-1H-101	17,18
03-E16-00-1H-102	19,20
03-E16-00-1H-103	21,22
03-E16-00-1H-104	23,24
03-E16-00-1H-105	25,26
03-E16-00-1H-106	27,28
03-E16-00-1H-107	29,30
03-E16-00-1H-108	31,32

Pipe	Smear Number
03-E16-00-1H-109	33,34
03-E16-00-1H-110	35,36

Comments

1) Accessible component surfaces (identified above by "Pipe" (Section ID) and "Smear Number") received preliminary LAWs followed by a detailed sample (scan and static survey) using Ludlum Meter/Dectector Models "2350-1 w/ 44-10" and "2360 w/ 43-68" or equivalent.
2) In addition to sample (survey) results documented within, LAWs did not indicate the presence of loose surface contaminants (α β γ).
3) Material surfaces corresponding to survey results within will be left intact as part of operationally active systems, componets, and/or structures. ☐ YES ☒ NO

Legend

K = Thousands
LAW = Large Area Swipe

RADIATION/CONTAMINATION SURVEY SUPPLEMENT

SURVEY NUMBER: HPS-PEPIPE-101210-023

SURVEYOR: R. Zahensky | LOCATION: Parcel E

Sample Number	Exposure Rate (μR/hr)		Fixed + Removable (NET)			Removable (NET)		Sample ID
	Contact	1 Meter	Gamma (cpm)	Alpha dpm/100cm2	Beta/Gamma dpm/100cm2	Alpha dpm/100cm2	Beta/Gamma dpm/100cm2	
1			7395	15.26	39.57	1.96	-1.43	
2			5709	9.16	85.58	1.96	6.97	
3			6400	15.26	99.38	1.96	0.67	
4			5280	-3.05	-6.44	-0.27	9.06	
5			6479	-9.16	117.78	-0.27	4.87	
6			5397	3.05	163.79	1.96	2.77	
7			6303	15.26	-6.44	-0.27	-3.52	
8			5326	9.16	90.18	-0.27	4.87	
9			7107	-3.05	-139.87	1.96	-1.43	
10			5473	3.05	269.61	4.20	2.77	
11			7152	3.05	242.01	-0.27	9.06	
12			5618	-3.05	177.59	-0.27	2.77	
13			7197	9.16	196.00	1.96	2.77	
14			5347	3.05	145.39	4.20	0.67	
15			6726	-3.05	-172.07	-0.27	4.87	
16			5355	3.05	16.56	1.96	-3.52	
17			6729	-3.05	34.97	-0.27	-1.43	
18			5539	-3.05	209.80	-0.27	13.26	
19			6595	9.16	292.62	-0.27	4.87	
20			5485	15.26	80.98	-0.27	4.87	
21			6628	15.26	85.58	1.96	4.87	
22			5231	3.05	-66.25	-0.27	6.97	
23			6045	-3.05	25.76	-0.27	-1.43	
24			5094	-9.16	246.61	-0.27	0.67	
25			6868	9.16	131.59	-0.27	0.67	
26			5425	21.37	80.98	-0.27	0.67	
27			6860	3.05	416.84	-0.27	2.77	
28			5454	-3.05	338.62	-0.27	2.77	
29			6965	9.16	306.42	4.20	2.77	
30			5341	-3.05	274.21	4.20	-1.43	
31			6706	-3.05	306.42	-0.27	2.77	
32			5343	3.05	274.21	-0.27	4.87	
33			6438	15.26	269.61	-0.27	6.97	
34			5332	15.26	163.79	4.20	9.06	
35			6761	9.16	-6.44	1.96	4.87	
36			5578	3.05	370.83	1.96	2.77	

Reviewer: [signature]

Items detained within are radiologically cleared for final disposition purposes —
10-13-10

SMEAR COUNTING ANALYSIS REPORT

ORIGINAL

COUNT DATE:	10/12/10	ANALYSIS PERFORMED BY:	A. Alexander
NWTS#:	HPS-PEPIPE-101210-023		
INSTRUMENT I.D.:	Protean WPC 9550	DETECTOR I.D.:	0615068
EFFICIENCIES: α:	14.93%	MDA: α: 9.60 dpm	Cal Due Date: 7/9/2011
βγ:	15.88%	βγ: 16.50 dpm	
SMEARS COLLECTED BY:	R. Zahansky		
SAMPLE COUNT TIME:	3 Minutes	ACTIVITY REPORT IN:	dpm/100cm²
α BACKGROUND:	0.04 CPM	βγ BACKGROUND:	0.56 CPM

Remarks: Pipe Survey Parcel E SW00470/ SW00471/ SW00472

	GROSS COUNTS		NET COUNTS		NET ACTIVITY	
	α	βγ	α	βγ	α	βγ
Smear #1	1	1	0.29	-0.23	1.96	-1.43
Smear #2	1	5	0.29	1.11	1.96	6.97
Smear #3	1	2	0.29	0.11	1.96	0.67
Smear #4	0	6	-0.04	1.44	-0.27	9.06
Smear #5	0	4	-0.04	0.77	-0.27	4.87
Smear #6	1	3	0.29	0.44	1.96	2.77
Smear #7	0	0	-0.04	-0.56	-0.27	-3.52
Smear #8	0	4	-0.04	0.77	-0.27	4.87
Smear #9	1	1	0.29	-0.23	1.96	-1.43
Smear #10	2	3	0.63	0.44	4.20	2.77
Smear #11	0	6	-0.04	1.44	-0.27	9.06
Smear #12	0	3	-0.04	0.44	-0.27	2.77
Smear #13	1	3	0.29	0.44	1.96	2.77
Smear #14	2	2	0.63	0.11	4.20	0.67
Smear #15	0	4	-0.04	0.77	-0.27	4.87
Smear #16	1	0	0.29	-0.56	1.96	-3.52
Smear #17	0	1	-0.04	-0.23	-0.27	-1.43
Smear #18	0	8	-0.04	2.11	-0.27	13.26
Smear #19	0	4	-0.04	0.77	-0.27	4.87
Smear #20	0	4	-0.04	0.77	-0.27	4.87
Smear #21	1	4	0.29	0.77	1.96	4.87
Smear #22	0	5	-0.04	1.11	-0.27	6.97
Smear #23	0	1	-0.04	-0.23	-0.27	-1.43
Smear #24	0	2	-0.04	0.11	-0.27	0.67
Smear #25	0	2	-0.04	0.11	-0.27	0.67
Smear #26	0	2	-0.04	0.11	-0.27	0.67
Smear #27	0	3	-0.04	0.44	-0.27	2.77
Smear #28	0	3	-0.04	0.44	-0.27	2.77
Smear #29	2	3	0.63	0.44	4.20	2.77
Smear #30	2	1	0.63	-0.23	4.20	-1.43
Smear #31	0	3	-0.04	0.44	-0.27	2.77
Smear #32	0	4	-0.04	0.77	-0.27	4.87
Smear #33	0	5	-0.04	1.11	-0.27	6.97
Smear #34	2	6	0.63	1.44	4.20	9.06
Smear #35	1	4	0.29	0.77	1.96	4.87
Smear #36	1	3	0.29	0.44	1.96	2.77

Remarks:

Reviewed by: Date: 10/13/10

RADIATION/CONTAMINATION SURVEY FORM

Date: 8/11/2010 Time: 14:40	INSTRUMENTATION USED						
	Model Inst/Det.	Serial Number	Calibration Due Date	Instrument % Efficiency	Total % Efficiency	MDC/MDA + (dpm/100cm2)	Background + (dpm/100cm2)
Survey Number: HPS-PEPIPE-081110-003	2360	193676	3/1/2011	α 41.40%	α 10.35%	α 33.35	α 5.75
	43-93	268610		βγ 40.30%	βγ 10.08%	βγ 283.63	βγ 866.52
Location: Parcel E	Protean	0615068	8/17/2010	α 59.79%	α 14.95%	α 9.59	α 0.27
				βγ 61.78%	βγ 15.45%	βγ 15.88	βγ 2.91
Surveyor: C. Bell							
Surveyor Signature:	2350-1	120636	3/2/2011				5.12
	44-10	192589					Kcpm
Isotopes of Concern:: Ra-226; Cs-137; Sr-90	Static Count Time: 2 Minutes (2360)						
	Description: Parcel E/UC3 Pipe						

Pipe	Smear Number	Pipe	Smear Number
03-E16-00-1A-01	1,2		
03-E16-00-8M-01	3,4		

Comments

1) Accessible component surfaces (identifed above by "Pipe" [Section ID] and "Smear Number") received preliminary LAW's followed by a detailed sample (scan and static survey) using Ludlum Meter/Dectector Models "2350-1 w/ 44-10" and "2360 w/ 43-68" or equivalent.
2) In addition to sample (survey) results documented within, LAW's did not indicate the presence of loose surface contaminants (ά β γ).
3) Material surfaces corresponding to survey results within will be left intact as part of operationally active systems, componets, and/or structures. ☐ YES ☐ NO

Legend

K = Thousands
LAW = Large Area Swipe

RADIATION/CONTAMINATION SURVEY SUPPLEMENT

SURVEY NUMBER: HPS-PEPIPE-081110-003

SURVEYOR: C. Bell | LOCATION: Parcel E

Sample Number	Exposure Rate (μR/hr)		Fixed + Removable (NET)			Removable (NET)		Sample ID
	Contact	1 Meter	Gamma (cpm)	Alpha dpm/100cm2	Beta/Gamma dpm/100cm2	Alpha dpm/100cm2	Beta/Gamma dpm/100cm2	
1			5680	0.00	98.47	-0.27	7.88	
2			5422	7.67	39.39	1.96	1.40	
3			5634	7.67	94.53	-0.27	-0.76	
4			6055	-3.83	177.24	-0.27	5.72	

Reviewer:

RADIATION/CONTAMINATION SURVEY FORM

Date: 8/12/2010 Time: 13:22	INSTRUMENTATION USED						
	Model Inst/Det.	Serial Number	Calibration Due Date	Instrument % Efficiency	Total % Efficiency	MDC/MDA + (dpm/100cm2)	Background + (dpm/100cm2)
Survey Number: HPS-PEPIPE-081210-004	2360	193676	3/1/2011	α 41.40%	α 10.35%	α 37.04	α 7.86
	43-93	268610		βγ 40.30%	βγ 10.08%	βγ 290.80	βγ 912.80
Location: Parcel E	Protean	0615068	8/17/2010	α 59.79%	α 14.95%	α 9.59	α 0.27
				βγ 61.78%	βγ 15.45%	βγ 15.88	βγ 2.91
Surveyor: C. Bell							
Surveyor Signature:	2350-1	120636	3/2/2011				5.1
	44-10	192589					Kcpm
Isotopes of Concern:: Ra-226; Cs-137; Sr-90	Static Count Time: 2 Minutes (2360)						
	Description: Parcel E/UC3 Pipe						

Pipe	Smear Number	Pipe	Smear Number
03-E16-74-3J-01	1,2		

Comments

1) Accessible component surfaces (identifed above by "Pipe" [Section ID] and "Smear Number") received preliminary LAW's followed by a detailed sample (scan and static survey) using Ludlum Meter/Dectector Models "2350-1 w/ 44-10" and "2360 w/ 43-68" or equivalent.
2) In addition to sample (survey) results documented within, LAW's did not indicate the presence of loose surface contaminants (ά β γ).
3) Material surfaces corresponding to survey results within will be left intact as part of operationally active systems, componets, and/or structures. ☐ YES ☐ NO

Legend

K = Thousands
LAW = Large Area Swipe

RADIATION/CONTAMINATION SURVEY SUPPLEMENT

SURVEY NUMBER: HPS-PEPIPE-081210-004

SURVEYOR: C. Bell

LOCATION: Parcel E

Sample Number	Exposure Rate (μR/hr)		Fixed + Removable (NET)			Removable (NET)		Sample ID
	Contact	1 Meter	Gamma (cpm)	Alpha dpm/100cm2	Beta/Gamma dpm/100cm2	Alpha dpm/100cm2	Beta/Gamma dpm/100cm2	
1			5327	-4.22	147.70	1.96	-0.76	
2			5418	3.45	833.04	-0.27	3.56	

Reviewer:

RADIATION/CONTAMINATION SURVEY FORM

Date: 8/16/2010 Time: 12:50	INSTRUMENTATION USED						
	Model Inst/Det.	Serial Number	Calibration Due Date	Instrument % Efficiency	Total % Efficiency	MDC/MDA + (dpm/100cm2)	Background + (dpm/100cm2)
Survey Number: HPS-PEPIPE-081610-005	2360	193680	3/4/2011	α 35.70%	α 8.93%	α 36.00	α 5.34
	43-68	075150		βγ 36.00%	βγ 9.00%	βγ 176.96	βγ 280.86
Location: Parcel E	Protean	0615068	8/17/2010	α 59.79%	α 14.95%	α 10.52	α 0.47
				βγ 61.78%	βγ 15.45%	βγ 16.09	βγ 3.04
Surveyor: C. Bell							
Surveyor Signature:	2350-1	120636	3/2/2011				5.1
	44-10	192589					Kcpm
Isotopes of Concern:: Ra-226; Cs-137; Sr-90	Static Count Time: 2 Minutes (2360)						
	Description: Parcel E/UC3 Manhole						

Pipe	Smear Number	Pipe	Smear Number
03-E16-00-1D-MH502	1,2		

Comments

1) Accessible component surfaces (identifed above by "Pipe" [Section ID] and "Smear Number") received preliminary LAW's followed by a detailed sample (scan and static survey) using Ludlum Meter/Dectector Models "2350-1 w/ 44-10" and "2360 w/ 43-68" or equivalent.
2) In addition to sample (survey) results documented within, LAW's did not indicate the presence of loose surface contaminants (ά β γ).
3) Material surfaces corresponding to survey results within will be left intact as part of operationally active systems, componets, and/or structures. ☐ YES ☐ NO

Legend

K = Thousands
LAW = Large Area Swipe

RADIATION/CONTAMINATION SURVEY SUPPLEMENT

SURVEY NUMBER: HPS-PEPIPE-081610-005

SURVEYOR: C. Bell

LOCATION: Parcel E

Sample Number	Exposure Rate (μR/hr)		Fixed + Removable (NET)			Removable (NET)		Sample ID
	Contact	1 Meter	Gamma (cpm)	Alpha dpm/100cm2	Beta/Gamma dpm/100cm2	Alpha dpm/100cm2	Beta/Gamma dpm/100cm2	
1			5838	-6.22	183.42	-0.47	5.59	
2			5222	7.11	293.65	-0.47	3.43	

Reviewer:

RADIATION/CONTAMINATION SURVEY FORM

Date: 8/18/2010 Time: 15:50	INSTRUMENTATION USED						
	Model Inst/Det.	Serial Number	Calibration Due Date	Instrument % Efficiency	Total % Efficiency	MDC/MDA + (dpm/100cm2)	Background + (dpm/100cm2)
Survey Number: HPS-PEPIPE-081810-006	2360	193680	3/4/2011	α 35.70%	α 8.93%	α 30.02	α 2.89
	43-68	075150		βγ 36.00%	βγ 9.00%	βγ 175.54	βγ 276.01
Location: Parcel E	Protean	0615068	8/17/2010	α 59.79%	α 14.95%	α 11.27	α 0.67
				βγ 61.78%	βγ 15.45%	βγ 15.56	βγ 2.72
Surveyor: C. Bell							
Surveyor Signature:	2350-1	120636	3/2/2011				6.68
	44-10	192589					Kcpm
Isotopes of Concern:: Ra-226; Cs-137; Sr-90	Static Count Time: 2 Minutes (2360)						
	Description: Parcel E/UC3 Pipe						

Pipe	Smear Number	Pipe	Smear Number
03-E16-00-1E-01	1,2		

Comments

1) Accessible component surfaces (identifed above by "Pipe" [Section ID] and "Smear Number") received preliminary LAW's followed by a detailed sample (scan and static survey) using Ludlum Meter/Dectector Models "2350-1 w/ 44-10" and "2360 w/ 43-68" or equivalent.
2) In addition to sample (survey) results documented within, LAW's did not indicate the presence of loose surface contaminants (ά β γ).
3) Material surfaces corresponding to survey results within will be left intact as part of operationally active systems, componets, and/or structures. ☐ YES ☐ NO

Legend

K = Thousands
LAW = Large Area Swipe

RADIATION/CONTAMINATION SURVEY SUPPLEMENT

SURVEY NUMBER:	HPS-PEPIPE-081810-006						
SURVEYOR:	C. Bell			LOCATION:	Parcel E		
Sample Number	Exposure Rate (μR/hr)		Fixed + Removable (NET)			Removable (NET)		Sample ID
	Contact	1 Meter	Gamma (cpm)	Alpha dpm/100cm2	Beta/Gamma dpm/100cm2	Alpha dpm/100cm2	Beta/Gamma dpm/100cm2	
1			6221	12.00	171.08	-0.67	14.55	
2			7263	7.56	188.71	-0.67	1.60	

Reviewer:

RADIATION/CONTAMINATION SURVEY FORM

Date: 8/19/2010 Time: 15:45	INSTRUMENTATION USED						
	Model Inst/Det.	Serial Number	Calibration Due Date	Instrument % Efficiency	Total % Efficiency	MDC/MDA + (dpm/100cm2)	Background + (dpm/100cm2)
Survey Number: HPS-PEPIPE-081910-007	2360	193680	3/4/2011	α 35.70%	α 8.93%	α 37.82	α 6.22
	43-68	075150		βγ 36.00%	βγ 9.00%	βγ 189.34	βγ 324.96
Location: Parcel E	Protean	0615068	8/17/2010	α 59.79%	α 14.95%	α 11.27	α 0.67
				βγ 61.78%	βγ 15.45%	βγ 16.87	βγ 3.56
Surveyor: C. Bell							
Surveyor Signature:	2350-1	120636	3/2/2011				5.41
	44-10	192589					Kcpm
Isotopes of Concern:: Ra-226; Cs-137; Sr-90	Static Count Time: 2 Minutes (2360)						
	Description: Parcel E/UC3 Pipe						

Pipe	Smear Number	Pipe	Smear Number
03-E16-00-1G-01	1,2		
03-E16-00-1J-01	3,4		

Comments

1) Accessible component surfaces (identifed above by "Pipe" [Section ID] and "Smear Number") received preliminary LAW's followed by a detailed sample (scan and static survey) using Ludlum Meter/Dectector Models "2350-1 w/ 44-10" and "2360 w/ 43-68" or equivalent.
2) In addition to sample (survey) results documented within, LAW's did not indicate the presence of loose surface contaminants (ά β γ).
3) Material surfaces corresponding to survey results within will be left intact as part of operationally active systems, componets, and/or structures. ☐ YES ☐ NO

Legend

K = Thousands
LAW = Large Area Swipe

RADIATION/CONTAMINATION SURVEY SUPPLEMENT

SURVEY NUMBER: HPS-PEPIPE-081910-007

SURVEYOR: C. Bell | LOCATION: Parcel E

Sample Number	Exposure Rate (μR/hr)		Fixed + Removable (NET)			Removable (NET)		Sample ID
	Contact	1 Meter	Gamma (cpm)	Alpha dpm/100cm2	Beta/Gamma dpm/100cm2	Alpha dpm/100cm2	Beta/Gamma dpm/100cm2	
1			5987	0.89	77.60	-0.67	9.39	
2			6358	-8.00	179.01	3.79	-1.40	
3			5656	0.89	183.42	-0.67	7.23	
4			6384	0.89	271.60	-0.67	-1.40	

Reviewer:

RADIATION/CONTAMINATION SURVEY FORM

Date: 8/23/2010 Time: 9:30	INSTRUMENTATION USED						
	Model Inst/Det.	Serial Number	Calibration Due Date	Instrument % Efficiency	Total % Efficiency	MDC/MDA + (dpm/100cm2)	Background + (dpm/100cm2)
Survey Number: HPS-PEPIPE-082310-008	2360	193680	3/4/2011	α 35.70%	α 8.93%	α 27.97	α 2.22
	43-68	075150		βγ 36.00%	βγ 9.00%	βγ 174.96	βγ 274.03
Location: Parcel E	Protean	0615068	8/17/2010	α 59.79%	α 14.95%	α 9.93	α 0.33
				βγ 61.78%	βγ 15.45%	βγ 17.95	βγ 4.34
Surveyor: C. Bell							
Surveyor Signature:	2350-1	120636	3/2/2011				5.31
	44-10	192589					Kcpm
Isotopes of Concern:: Ra-226; Cs-137; Sr-90	Static Count Time: 2 Minutes (2360)						
	Description: Parcel E/UC3 Pipe						

Pipe	Smear Number	Pipe	Smear Number
03-E16-00-1J-02	1,2		

Comments

1) Accessible component surfaces (identifed above by "Pipe" [Section ID] and "Smear Number") received preliminary LAW's followed by a detailed sample (scan and static survey) using Ludlum Meter/Dectector Models "2350-1 w/ 44-10" and "2360 w/ 43-68" or equivalent.
2) In addition to sample (survey) results documented within, LAW's did not indicate the presence of loose surface contaminants (ά β γ).
3) Material surfaces corresponding to survey results within will be left intact as part of operationally active systems, componets, and/or structures. ☐ YES ☐ NO

Legend

K = Thousands
LAW = Large Area Swipe

RADIATION/CONTAMINATION SURVEY SUPPLEMENT

SURVEY NUMBER: HPS-PEPIPE-082310-008

SURVEYOR: C. Bell

LOCATION: Parcel E

Sample Number	Exposure Rate (μR/hr)		Fixed + Removable (NET)			Removable (NET)		Sample ID
	Contact	1 Meter	Gamma (cpm)	Alpha dpm/100cm2	Beta/Gamma dpm/100cm2	Alpha dpm/100cm2	Beta/Gamma dpm/100cm2	
1			5690	22.23	113.32	-0.33	-2.18	
2			4641	13.34	294.09	-0.33	8.61	

Reviewer:

RADIATION/CONTAMINATION SURVEY FORM

Date: 10/13/2010	Time: 9:00	INSTRUMENTATION USED						
		Model Inst/Det.	Serial Number	Calibration Due Date	Instrument % Efficiency	Total % Efficiency	MDC/MDA + (dpm/100cm2)	Background + (dpm/100cm2)
Survey Number: HPS-PEPIPE-101310-024		2360	202415	10/1/2011	α 26.00%	α 6.50%	α 43.72	α 4.88
		43-68	094819		βγ 34.50%	βγ 8.63%	βγ 276.20	βγ 691.28
Location: Parcel E		Protean	0615068	7/9/2011	α 59.72%	α 14.93%	α 11.29	α 0.67
					βγ 63.55%	βγ 15.89%	βγ 18.86	βγ 5.35
Surveyor: R. Zahensky								
Surveyor Signature:		2350-1	129430	5/12/2011				7.4
		44-10	012176					Kcpm
Isotopes of Concern: Ra-226; Cs-137; Sr-90		Static Count Time: 2 Minutes (2360)						
		Description: Parcel E/UC3 Pipe						

Pipe	Smear Number	Pipe	Smear Number
03-E16-00-1H-111	1,2		
03-E16-00-1H-112	3,4		
03-E16-00-1H-113	5,6		
03-E16-00-1H-114	7,8		
03-E16-00-1H-115	9,10		
03-E16-00-1H-116	11,12		
03-E16-00-1H-117	13,14		
03-E16-00-1H-118	15,16		
03-E16-00-1H-119	17,18		
03-E16-00-1H-120	19,20		
03-E16-00-1H-121	21,22		
03-E16-00-1H-122	23,24		

Comments

1) Accessible component surfaces (identifed above by "Pipe" [Section ID] and "Smear Number") received preliminary LAW's followed by a detailed sample (scan and static survey) using Ludlum Meter/Dectector Models "2350-1 w/ 44-10" and "2360 w/ 43-68" or equivalent.
2) In addition to sample (survey) results documented within, LAW's did not indicate the presence of loose surface contaminants (α β γ).
3) Material surfaces corresponding to survey results within will be left intact as part of operationally active systems, componets, and/or structures. ☐ YES ☑ NO

Legend

K = Thousands
LAW = Large Area Swipe

RADIATION/CONTAMINATION SURVEY SUPPLEMENT

SURVEY NUMBER: HPS-PEPIPE-101310-024

SURVEYOR: R. Zahensky | LOCATION: Parcel E

Sample Number	Exposure Rate (µR/hr)		Fixed + Removable (NET)			Removable (NET)		Sample ID
	Contact	1 Meter	Gamma (cpm)	Alpha dpm/100cm2	Beta/Gamma dpm/100cm2	Alpha dpm/100cm2	Beta/Gamma dpm/100cm2	
1			5693	14.65	416.38	-0.67	-3.25	
2			6236	-3.66	324.36	-0.67	-5.35	
3			5855	8.55	20.70	-0.67	3.04	
4			6964	20.76	246.15	-0.67	-3.25	
5			5877	2.44	278.35	-0.67	-3.25	
6			6477	20.76	117.32	-0.67	-3.25	
7			5937	2.44	71.31	6.03	5.14	
8			7265	20.76	485.39	-0.67	-1.15	
9			5957	14.65	457.79	-0.67	-3.25	
10			7076	-3.66	453.19	-0.67	-5.35	
11			6783	14.65	476.19	1.56	0.94	
12			7263	20.76	80.52	-0.67	3.04	
13			6080	-3.66	301.36	-0.67	9.34	
14			7119	-3.66	121.92	-0.67	3.04	
15			7134	2.44	457.79	-0.67	-5.35	
16			7585	14.65	443.98	-0.67	3.04	
17			6949	8.55	232.34	-0.67	-3.25	
18			7150	-3.66	379.57	-0.67	-5.35	
19			6239	-9.77	278.35	1.56	9.34	
20			7182	2.44	236.95	-0.67	-1.15	
21			6288	8.55	126.52	-0.67	-1.15	
22			6898	14.65	149.53	-0.67	-3.25	
23			6281	20.76	-52.91	-0.67	-3.25	
24			6050	2.44	232.34	-0.67	3.04	

Reviewer: JA/BL Mills for K. Bowers

SMEAR COUNTING ANALYSIS REPORT **ORIGINAL**

COUNT DATE:	10/14/10	ANALYSIS PERFORMED BY:	E. Schrader
NWTS#:	HPS-PEPIPE-101310-024		
INSTRUMENT I.D.:	Protean WPC 9550	DETECTOR I.D.:	0615009
EFFICIENCIES: α:	14.93%	MDA: α: 11.29 dpm	Cal Due Date: 7/8/2011
βγ:	15.88%	βγ: 18.88 dpm	
SMEARS COLLECTED BY:	R. Zahensky		
SAMPLE COUNT TIME:	3 Minutes	ACTIVITY REPORT IN:	dpm/100cm²
α BACKGROUND:	0.1 CPM	βγ BACKGROUND:	0.85 CPM

Remarks: Pipe Survey Parcel E SW00473 & SW00474	GROSS COUNTS		NET COUNTS		NET ACTIVITY	
	α	βγ	α	βγ	α	βγ
Smear #1	0	1	-0.10	-0.52	-0.67	-3.25
Smear #2	0	0	-0.10	-0.85	-0.67	-5.35
Smear #3	0	4	-0.10	0.48	-0.67	3.04
Smear #4	0	1	-0.10	-0.52	-0.67	-3.25
Smear #5	0	1	-0.10	-0.52	-0.67	-3.25
Smear #6	0	1	-0.10	-0.52	-0.67	-3.25
Smear #7	3	5	0.90	0.82	6.03	5.14
Smear #8	0	2	-0.10	-0.18	-0.67	-1.15
Smear #9	0	1	-0.10	-0.52	-0.67	-3.25
Smear #10	0	0	-0.10	-0.85	-0.67	-5.35
Smear #11	1	3	0.23	0.15	1.56	0.94
Smear #12	0	4	-0.10	0.48	-0.67	3.04
Smear #13	0	7	-0.10	1.48	-0.67	9.34
Smear #14	0	4	-0.10	0.48	-0.67	3.04
Smear #15	0	0	-0.10	-0.85	-0.67	-5.35
Smear #16	0	4	-0.10	0.48	-0.67	3.04
Smear #17	0	1	-0.10	-0.52	-0.67	-3.25
Smear #18	0	0	-0.10	-0.85	-0.67	-5.35
Smear #19	1	7	0.23	1.48	1.56	9.34
Smear #20	0	2	-0.10	-0.18	-0.67	-1.15
Smear #21	0	2	-0.10	-0.18	-0.67	-1.15
Smear #22	0	1	-0.10	-0.52	-0.67	-3.25
Smear #23	0	1	-0.10	-0.52	-0.67	-3.25
Smear #24	0	4	-0.10	0.48	-0.67	3.04

Remarks:

Reviewed by: Date: 10/15/10

NEW WORLD TECHNOLOGY FORM NWT-008 v2

APPENDIX C

SEDIMENT SAMPLE LABORATORY ANALYTICAL RESULTS
(on CD only)

This page intentionally left blank.

ORTEC g v - i (3263) Npp32 G53W3.10 26-AUG-2010 10:01:03
New World Technology Spectrum name: 1N001071.An1

Sample description
Parcel E 03-PEMH512-018-01 329g
8/24/10 13:15

Acquisition information
Start time: 25-Aug-2010 18:38:33
Live time: 5400
Real time: 5403

- -

***** S U M M A R Y O F N U C L I D E S I N S A M P L E *****

Nuclide		Time of Count Activity pCi/g	Uncertainty Counting pCi/g	2 Sigma Total pCi/g	MDA pCi/g
Ac-228		6.2156E-01	1.5533E-01	1.6116E-01	0.136E+00
AM-241	#A	1.8478E-02	4.5854E-02	4.5884E-02	0.372E-01
Bi-212		3.3942E-01	2.6329E-01	2.6430E-01	0.194E+00
BI-214		6.4404E-01	1.3696E-01	1.4350E-01	0.517E-01
CO-60	#A	-8.4135E-03	6.7886E-03	6.8124E-03	0.257E-01
CS-137		1.0333E-01	3.7752E-02	3.8386E-02	0.232E-01
EU-152	A	-1.5798E-01	1.4552E-01	1.4613E-01	0.626E-01
EU-154	A	6.7127E-03	3.3370E-02	3.3375E-02	0.267E-01
K-40		9.4582E+00	1.1132E+00	1.2931E+00	0.303E+00
Pa-234	#C	1.5565E-01	1.1538E-01	1.1618E-01	0.531E-01
Pb-210	#	1.0086E+00	7.0872E-01	7.1315E-01	0.480E+00
Pb-212		7.0464E-01	8.5997E-02	1.0136E-01	0.462E-01
Pb-214		5.0343E-01	8.7232E-02	9.4431E-02	0.421E-01
RA-226		6.3698E-01	6.9410E-01	6.9577E-01	0.561E+00
Th-230	#A	-1.2844E+00	8.1963E+00	8.1992E+00	0.422E+01
Th-234	A	4.7830E-01	8.6431E-01	8.6551E-01	0.809E+00
Tl-208		2.9498E-01	4.7135E-02	7.1074E-02	0.178E-01
U-235	A	3.5918E-02	6.5699E-02	6.5755E-02	0.411E-01

- All peaks for activity calculation had bad shape.
* - Activity omitted from total
& - Activity omitted from total and all peaks had bad shape.
< - MDA value printed.
A - Activity printed, but activity < MDA.
B - Activity < MDA and failed test.
C - Area < Critical level.
F - Failed fraction or key line test.
H - Halflife limit exceeded

---------- S U M M A R Y ----------

Total Activity (36.6 to 2885.2 keV) 1.368E+01 pCi/g

Laboratory: New World Technology

ORTEC g v - i (3263) Npp32 G53W3.10 25-AUG-2010 19:54:28
New World Technology Spectrum name: 5N000526.An1

Sample description
Parcel E 03-PEMH513-017-01 359g
8/24/10 14:10

Acquisition information
Start time: 25-Aug-2010 18:16:39
Live time: 5400
Real time: 5404

- -

***** S U M M A R Y O F N U C L I D E S I N S A M P L E *****

Nuclide		Time of Count Activity pCi/g	Uncertainty Counting pCi/g	2 Sigma Total pCi/g	MDA pCi/g
Ac-228		4.3602E-01	1.4201E-01	1.4517E-01	0.101E+00
AM-241		2.1125E-01	9.5359E-02	9.7198E-02	0.738E-01
Bi-212		2.3751E-01	2.8410E-01	2.8456E-01	0.226E+00
BI-214		6.4892E-01	1.1116E-01	1.1925E-01	0.443E-01
CO-60	#A	8.8069E-03	1.8674E-02	1.8683E-02	0.152E-01
CS-137		4.6966E-02	3.4808E-02	3.4951E-02	0.264E-01
EU-152	#A	-1.1982E-01	1.6185E-01	1.6208E-01	0.931E-01
EU-154	C	6.6782E-02	6.2768E-02	6.3023E-02	0.418E-01
K-40		1.0350E+01	1.1120E+00	1.3248E+00	0.636E+00
Pa-234	A	4.5472E-02	4.4038E-02	4.4217E-02	0.616E-01
Pb-210		7.6137E-01	7.7273E-01	7.7504E-01	0.541E+00
Pb-212		4.5106E-01	7.5439E-02	8.2889E-02	0.534E-01
Pb-214		4.3485E-01	9.9995E-02	1.0476E-01	0.542E-01
RA-226	A	1.9888E-01	7.1827E-01	7.1843E-01	0.595E+00
Th-230	A	1.4579E+00	5.3844E+00	5.3901E+00	0.440E+01
Th-234	#A	-4.4307E-01	1.4020E+00	1.4026E+00	0.827E+00
Tl-208	#	2.9806E-01	6.6235E-02	8.5301E-02	0.867E-02
U-235		8.5961E-02	5.2148E-02	5.2552E-02	0.365E-01

- All peaks for activity calculation had bad shape.
* - Activity omitted from total
& - Activity omitted from total and all peaks had bad shape.
< - MDA value printed.
A - Activity printed, but activity < MDA.
B - Activity < MDA and failed test.
C - Area < Critical level.
F - Failed fraction or key line test.
H - Halflife limit exceeded

---------- S U M M A R Y ----------

Total Activity (37.9 to 3020.7 keV) 1.296E+01 pCi/g

Laboratory: New World Technology

ORTEC g v - i (3263) Npp32 G53W3.10 10-AUG-2010 08:41:20
New World Technology Spectrum name: 1N000957.An1

Sample description
Parcel E 03-PEMH515-015-01 353g
8/09/10 12:50

Acquisition information
Start time: 10-Aug-2010 07:34:38
Live time: 2700
Real time: 2701

- -

***** S U M M A R Y O F N U C L I D E S I N S A M P L E *****

Nuclide		Time of Count Activity pCi/g	Uncertainty 2 Sigma Counting pCi/g	Total pCi/g	MDA pCi/g
Ac-228		7.4199E-01	2.2858E-01	2.3426E-01	0.889E-01
AM-241	#A	-7.0075E-03	6.2328E-02	6.2328E-02	0.101E-01
Bi-212	#	8.6824E-01	5.0743E-01	5.1086E-01	0.257E+00
BI-214		4.4688E-01	1.4450E-01	1.4753E-01	0.633E-01
CO-60	#A	-1.9830E-02	1.4071E-01	1.4072E-01	0.402E-01
CS-137		7.4340E-02	4.0506E-02	4.0813E-02	0.236E-01
EU-152	A	1.5702E-02	1.3809E-02	1.3873E-02	0.913E-01
EU-154	A	2.1764E-02	4.9450E-02	4.9484E-02	0.391E-01
K-40		7.3247E+00	1.2649E+00	1.3637E+00	0.313E+00
Pa-234	#A	9.0933E-03	3.8019E-02	3.8028E-02	0.585E-01
Pb-210	#	9.1023E-01	1.0305E+00	1.0330E+00	0.671E+00
Pb-212		4.9565E-01	9.7704E-02	1.0474E-01	0.537E-01
Pb-214		4.1895E-01	1.2076E-01	1.2445E-01	0.588E-01
RA-226	A	6.2140E-01	9.6453E-01	9.6567E-01	0.779E+00
Th-230	#A	-5.7715E-01	4.5647E+00	4.5647E+00	0.818E+00
Th-234	A	7.6785E-01	1.0894E+00	1.0918E+00	0.102E+01
Tl-208		2.1327E-01	4.8687E-02	6.2045E-02	0.564E-01
U-235	A	3.8877E-02	4.8634E-02	4.8723E-02	0.551E-01

- All peaks for activity calculation had bad shape.
* - Activity omitted from total
& - Activity omitted from total and all peaks had bad shape.
< - MDA value printed.
A - Activity printed, but activity < MDA.
B - Activity < MDA and failed test.
C - Area < Critical level.
F - Failed fraction or key line test.
H - Halflife limit exceeded

---------- S U M M A R Y ----------

Total Activity (36.6 to 2885.2 keV) 1.058E+01 pCi/g

Laboratory: New World Technology

ORTEC g v - i (3263) Npp32 G53W3.10 11-AUG-2010 11:45:46
New World Technology Spectrum name: 2N000581.An1

Sample description
Parcel E 03-PEMH523-016-01 337g
8/10/10 13:25

Acquisition information
Start time: 11-Aug-2010 09:59:30
Live time: 5400
Real time: 5408

- -

***** S U M M A R Y O F N U C L I D E S I N S A M P L E *****

Nuclide		Time of Count Activity pCi/g	Uncertainty Counting pCi/g	2 Sigma Total pCi/g	MDA pCi/g
Ac-228		4.8450E-01	1.3813E-01	1.4213E-01	0.151E+00
AM-241	#A	-1.5590E-01	3.5268E+00	3.5268E+00	0.187E+00
Bi-212		4.0916E-01	2.7601E-01	2.7741E-01	0.203E+00
BI-214		6.5817E-01	1.4254E-01	1.4911E-01	0.610E-01
CO-60	#A	-3.5875E-02	2.1572E-01	2.1573E-01	0.296E-01
CS-137		7.0428E-02	4.2337E-02	4.2601E-02	0.308E-01
EU-152	#A	-2.2768E-01	2.3881E-01	2.3959E-01	0.979E-01
EU-154	C	1.1509E-01	7.2815E-02	7.3465E-02	0.501E-01
K-40		1.5792E+01	1.1898E+00	1.6197E+00	0.115E+00
Pa-234	C	1.5859E-01	9.2566E-02	9.3602E-02	0.106E+00
Pb-210	#C	0.0000E+00	3.6771E+00	3.6771E+00	0.000E+00
Pb-212		4.3439E-01	9.6202E-02	1.0173E-01	0.656E-01
PB-214		5.1617E-01	1.0845E-01	1.1462E-01	0.557E-01
RA-226	A	8.2926E-02	8.7404E-01	8.7406E-01	0.731E+00
Th-230	#A	-1.9369E+00	1.8809E+01	1.8811E+01	0.117E+02
Th-234	#A	9.5417E-01	1.6076E+00	1.6101E+00	0.113E+01
Tl-208		1.3164E-01	4.7085E-02	4.7885E-02	0.347E-01
U-235	A	8.0838E-03	2.3580E-02	2.3588E-02	0.466E-01

- All peaks for activity calculation had bad shape.
* - Activity omitted from total
& - Activity omitted from total and all peaks had bad shape.
< - MDA value printed.
A - Activity printed, but activity < MDA.
B - Activity < MDA and failed test.
C - Area < Critical level.
F - Failed fraction or key line test.
H - Halflife limit exceeded

---------- S U M M A R Y ----------

Total Activity (32.4 to 2597.5 keV) 1.850E+01 pCi/g

Laboratory: New World Technology

ORTEC g v - i (3263) Npp32 G53W3.10 29-SEP-2010 11:19:04
New World Technology Spectrum name: 4N000604.An1

Sample description
Parcel E 03-PEMH533-019-01 335g
9/28/10 09:40

Acquisition information
Start time: 29-Sep-2010 10:33:52
Live time: 2700
Real time: 2702

- -

***** S U M M A R Y O F N U C L I D E S I N S A M P L E *****

Nuclide	Time of Count Activity pCi/g	Uncertainty 2 Sigma Counting pCi/g	Total pCi/g	MDA pCi/g
Ac-228	7.4307E-01	2.3780E-01	2.4328E-01	0.147E+00
AM-241 #A	1.9244E-01	7.6049E-01	7.6068E-01	0.591E+00
Bi-212 A	1.3831E-01	3.9494E-01	3.9505E-01	0.309E+00
BI-214	6.0383E-01	2.2915E-01	2.3264E-01	0.950E-01
CO-60 #A	2.4601E-02	5.2417E-02	5.2443E-02	0.404E-01
CS-137	6.1700E-02	5.6442E-02	5.6594E-02	0.409E-01
EU-152 #A	5.3458E-02	4.4946E-02	4.5173E-02	0.141E+00
EU-154 C	1.8481E-01	1.3347E-01	1.3439E-01	0.821E-01
K-40	1.2733E+01	1.6337E+00	1.8584E+00	0.122E+00
Pa-234	1.9945E-01	1.2764E-01	1.2883E-01	0.160E+00
Pb-210 #	0.0000E+00	0.0000E+00	0.0000E+00	0.000E+00
Pb-212	3.8267E-01	1.2541E-01	1.2875E-01	0.891E-01
Pb-214	5.3281E-01	2.2138E-01	2.2467E-01	0.111E+00
RA-226 A	2.9946E-01	1.4297E+00	1.4299E+00	0.118E+01
Th-230 #A	-1.8128E+01	1.2654E+02	1.2658E+02	0.267E+02
Th-234 #A	-3.4636E+00	9.4658E+00	9.4715E+00	0.214E+01
Tl-208	1.7565E-01	7.7205E-02	8.3451E-02	0.207E-01
U-235 #A	1.3578E-02	1.4131E-02	1.4168E-02	0.791E-01

- All peaks for activity calculation had bad shape.
* - Activity omitted from total
& - Activity omitted from total and all peaks had bad shape.
< - MDA value printed.
A - Activity printed, but activity < MDA.
B - Activity < MDA and failed test.
C - Area < Critical level.
F - Failed fraction or key line test.
H - Halflife limit exceeded

---------- S U M M A R Y ----------

Total Activity (51.0 to 3247.3 keV) 1.523E+01 pCi/g

Laboratory: New World Technology

ORTEC g v - i (3263) Npp32 G53W3.10 30-APR-2010 15:51:41
New World Technology Spectrum name: 1N000481.An1

Sample description
Parcel E 03-PEMH543-013-01 325g
4/22/10 11:22

Acquisition information
Start time: 30-Apr-2010 14:19:43
Live time: 2700
Real time: 2701

- -

***** S U M M A R Y O F N U C L I D E S I N S A M P L E *****

Nuclide		Time of Count Activity pCi/g	Uncertainty Counting pCi/g	2 Sigma Total pCi/g	MDA pCi/g
Ac-228		4.8634E-01	1.6212E-01	1.6556E-01	0.920E-01
AM-241	#A	-1.2582E-02	1.0837E-01	1.0838E-01	0.283E-01
Bi-212	#	4.2515E-01	3.5970E-01	3.6087E-01	0.200E+00
BI-214		5.0230E-01	1.3505E-01	1.3912E-01	0.418E-01
CO-60	#	1.6120E-02	2.2133E-02	2.2160E-02	0.121E-01
CS-137		3.3662E-01	7.9935E-02	8.3076E-02	0.365E-01
EU-152	#A	-2.3801E-01	5.8420E-01	5.8455E-01	0.892E-01
EU-154	#A	2.4335E-02	4.9238E-02	4.9281E-02	0.352E-01
K-40	#	1.0914E+01	1.5529E+00	1.7286E+00	0.301E+00
Pa-234	#C	6.4273E-02	7.0314E-02	7.0539E-02	0.584E-01
Pb-210	#	1.3691E+00	7.6971E-01	7.7722E-01	0.549E+00
Pb-212		4.4273E-01	1.0637E-01	1.1159E-01	0.591E-01
Pb-214		4.4013E-01	1.4498E-01	1.4839E-01	0.693E-01
RA-226		1.3890E+00	8.0708E-01	8.1389E-01	0.595E+00
Th-230	#	5.9089E+00	6.7464E+00	6.8203E+00	0.470E+01
Th-234	#	1.1802E+00	1.4035E+00	1.4080E+00	0.111E+01
Tl-208	#C	7.5109E-02	3.4219E-02	3.6802E-02	0.205E-01
U-235	C	9.1426E-02	8.7950E-02	8.8222E-02	0.476E-01

- All peaks for activity calculation had bad shape.
* - Activity omitted from total
& - Activity omitted from total and all peaks had bad shape.
< - MDA value printed.
A - Activity printed, but activity < MDA.
B - Activity < MDA and failed test.
C - Area < Critical level.
F - Failed fraction or key line test.
H - Halflife limit exceeded

---------- S U M M A R Y ----------

Total Activity (36.6 to 2885.2 keV) 1.631E+01 pCi/g

Laboratory: New World Technology

ORTEC g v - i (3263) Npp32 G53W3.10 27-APR-2010 10:22:23
New World Technology Spectrum name: 2N000282.An1

Sample description
Parcel E 03-PEMH636-014-01 376g
4/23/10 13:30

Acquisition information
Start time: 27-Apr-2010 08:39:22
Live time: 5400
Real time: 5408

- -

***** S U M M A R Y O F N U C L I D E S I N S A M P L E *****

Nuclide		Time of Count Activity pCi/g	Uncertainty Counting pCi/g	2 Sigma Total pCi/g	MDA pCi/g
Ac-228	F	9.1019E-01	2.0854E-01	2.1782E-01	0.969E-01
AM-241	B	6.9292E-02	2.9803E-01	2.9809E-01	0.248E+00
Bi-212	F	5.3991E-01	2.8571E-01	2.8807E-01	0.210E+00
BI-214	F	5.4413E-01	1.2459E-01	1.2974E-01	0.757E-01
CO-60	#B	-2.6469E-02	1.2737E-01	1.2738E-01	0.211E-01
CS-137		2.0938E-01	4.5258E-02	4.7396E-02	0.247E-01
EU-152	B	3.6126E-02	2.4768E-02	2.4956E-02	0.108E+00
EU-154	F	7.6677E-02	6.0747E-02	6.1093E-02	0.595E-01
K-40		6.9857E+00	1.0129E+00	1.1235E+00	0.792E+00
Pa-234	F	1.8247E-01	9.1093E-02	9.2484E-02	0.886E-01
Pb-210	#F	0.0000E+00	3.5428E+00	3.5428E+00	0.000E+00
Pb-212		6.7101E-01	9.1569E-02	1.0486E-01	0.606E-01
PB-214		6.6636E-01	1.3794E-01	1.4601E-01	0.788E-01
RA-226		8.9440E-01	8.5302E-01	8.5570E-01	0.684E+00
Th-230	#B	1.0356E+00	8.3466E+00	8.3485E+00	0.740E+01
Th-234		1.4234E+00	1.2663E+00	1.2736E+00	0.104E+01
Tl-208	F	2.2583E-01	5.1553E-02	5.3679E-02	0.352E-01
U-235	F	5.8086E-02	6.5798E-02	6.5945E-02	0.483E-01

- All peaks for activity calculation had bad shape.
* - Activity omitted from total
& - Activity omitted from total and all peaks had bad shape.
< - MDA value printed.
A - Activity printed, but activity < MDA.
B - Activity < MDA and failed test.
C - Area < Critical level.
F - Failed fraction or key line test.
H - Halflife limit exceeded

---------- S U M M A R Y ----------

Total Activity (32.4 to 2597.5 keV) 1.307E+01 pCi/g

Laboratory: New World Technology

ORTEC g v - i (3263) Npp32 G53W3.10 05-APR-2010 21:12:04
New World Technology Spectrum name: 2N000226.An1

Sample description
Parcel E 03-PEPI-0013-01 399g
4/02/10 11:00

Acquisition information
Start time: 05-Apr-2010 20:25:13
Live time: 5400
Real time: 5408

- -

***** S U M M A R Y O F N U C L I D E S I N S A M P L E *****

Nuclide		Time of Count Activity pCi/g	Uncertainty 2 Sigma Counting pCi/g	Total pCi/g	MDA pCi/g
Ac-228	F	6.3845E-01	1.8611E-01	1.9022E-01	0.967E-01
AM-241	#B	-6.7125E-02	5.5347E-01	5.5349E-01	0.196E+00
Bi-212	F	3.5767E-01	2.2731E-01	2.2836E-01	0.171E+00
BI-214	F	4.4490E-01	1.0240E-01	1.0582E-01	0.686E-01
CO-60	#B	1.3663E-02	1.8220E-02	1.8239E-02	0.248E-01
CS-137		8.4020E-02	3.5040E-02	3.5405E-02	0.236E-01
EU-152	B	-8.1894E-02	9.9546E-02	9.9709E-02	0.850E-01
EU-154	F	5.8488E-02	6.1331E-02	6.1465E-02	0.365E-01
K-40		8.9360E+00	1.0562E+00	1.1924E+00	0.730E+00
Pa-234	F	1.2828E-01	8.4021E-02	8.4553E-02	0.103E+00
Pb-210	#F	0.0000E+00	3.1335E+00	3.1335E+00	0.000E+00
Pb-212		4.0763E-01	7.6833E-02	8.1123E-02	0.548E-01
PB-214	F	4.9257E-01	1.1438E-01	1.1835E-01	0.675E-01
RA-226		1.1163E+00	7.7779E-01	7.8105E-01	0.615E+00
Th-230	#B	-2.7847E+01	3.3880E+02	3.3881E+02	0.140E+02
Th-234	#B	9.1122E-01	1.3747E+00	1.3766E+00	0.962E+00
Tl-208	F	1.7922E-01	5.0555E-02	5.1676E-02	0.294E-01
U-235	F	6.7049E-02	7.7585E-02	7.7703E-02	0.438E-01

- All peaks for activity calculation had bad shape.
* - Activity omitted from total
& - Activity omitted from total and all peaks had bad shape.
< - MDA value printed.
A - Activity printed, but activity < MDA.
B - Activity < MDA and failed test.
C - Area < Critical level.
F - Failed fraction or key line test.
H - Halflife limit exceeded

---------- S U M M A R Y ----------

Total Activity (32.5 to 2597.5 keV) 1.266E+01 pCi/g

Laboratory: New World Technology

ORTEC g v - i (3263) Npp32 G53W3.10 06-APR-2010 18:48:26
New World Technology Spectrum name: 3N000223.An1

Sample description
Parcel E 03-PEPI-0014-01 361g
4/05/10 09:40

Acquisition information
Start time: 06-Apr-2010 17:16:49
Live time: 5400
Real time: 5405

- -

***** S U M M A R Y O F N U C L I D E S I N S A M P L E *****

Nuclide		Time of Count Activity pCi/g	Uncertainty 2 Sigma Counting pCi/g	Total pCi/g	MDA pCi/g
Ac-228	F	5.7181E-01	1.3333E-01	1.3791E-01	0.102E+00
AM-241	#F	6.4903E-02	7.4260E-02	7.4382E-02	0.553E-01
Bi-212	F	7.7069E-01	3.2046E-01	3.2389E-01	0.210E+00
BI-214	F	2.1251E-01	9.0747E-02	9.1636E-02	0.738E-01
CO-60	#B	-2.7405E-02	1.2307E-01	1.2309E-01	0.274E-01
CS-137		2.2526E-01	5.1536E-02	5.3300E-02	0.311E-01
EU-152	B	-8.0896E-02	4.9601E-02	4.9918E-02	0.988E-01
EU-154	F	4.5748E-02	6.7419E-02	6.7493E-02	0.453E-01
K-40		1.0364E+01	1.1775E+00	1.3411E+00	0.514E+00
Pa-234	F	1.5603E-01	1.0035E-01	1.0101E-01	0.773E-01
Pb-210	#B	-4.7964E-01	1.8819E+00	1.8821E+00	0.612E+00
Pb-212	F	4.6463E-01	8.3177E-02	8.8311E-02	0.542E-01
PB-214	F	3.0247E-01	9.7597E-02	9.9366E-02	0.695E-01
RA-226	B	3.5202E-01	7.9886E-01	7.9918E-01	0.661E+00
Th-230	#B	-2.5916E+00	1.5097E+01	1.5100E+01	0.592E+01
Th-234	#B	-3.2868E-01	1.1867E+00	1.1870E+00	0.967E+00
Tl-208	F	2.6874E-01	6.9986E-02	7.7823E-02	0.360E-01
U-235	B	4.5303E-02	6.6429E-02	6.6493E-02	0.471E-01

- All peaks for activity calculation had bad shape.
* - Activity omitted from total
& - Activity omitted from total and all peaks had bad shape.
< - MDA value printed.
A - Activity printed, but activity < MDA.
B - Activity < MDA and failed test.
C - Area < Critical level.
F - Failed fraction or key line test.
H - Halflife limit exceeded

---------- S U M M A R Y ----------

Total Activity (43.6 to 2779.0 keV) 1.334E+01 pCi/g

Laboratory: New World Technology

ORTEC g v - i (3263) Npp32 G53W3.10 07-APR-2010 08:35:44
New World Technology Spectrum name: 4N000172.An1

Sample description
Parcel E 03-PEPI-0015-01 326g
4/06/10 10:45

Acquisition information
Start time: 07-Apr-2010 07:48:56
Live time: 5400
Real time: 5407

- -

***** S U M M A R Y O F N U C L I D E S I N S A M P L E *****

Nuclide		Time of Count Activity pCi/g	Uncertainty 2 Sigma Counting pCi/g	Total pCi/g	MDA pCi/g
Ac-228	F	5.9521E-01	2.0728E-01	2.1050E-01	0.121E+00
AM-241	#B	1.6583E-01	4.4701E-01	4.4715E-01	0.372E+00
Bi-212	F	4.8485E-01	2.9566E-01	2.9714E-01	0.210E+00
BI-214	F	4.0425E-01	1.3741E-01	1.3953E-01	0.899E-01
CO-60	#B	-1.9802E-02	3.8990E-02	3.9009E-02	0.278E-01
CS-137		2.3351E-01	6.0881E-02	6.2492E-02	0.368E-01
EU-152	B	5.4769E-02	4.3616E-02	4.3782E-02	0.100E+00
EU-154	F	5.7400E-02	4.8343E-02	4.8507E-02	0.519E-01
K-40		9.0943E+00	1.1651E+00	1.2941E+00	0.689E+00
Pa-234	#F	1.9482E-01	1.7418E-01	1.7478E-01	0.103E+00
Pb-210	#F	0.0000E+00	3.0842E+00	3.0842E+00	0.000E+00
Pb-212	F	5.8241E-01	1.0443E-01	1.1086E-01	0.699E-01
Pb-214	F	4.2615E-01	1.4824E-01	1.5056E-01	0.899E-01
RA-226	B	6.0096E-01	9.2265E-01	9.2345E-01	0.750E+00
Th-230	B	8.4147E+00	3.2337E+01	3.2355E+01	0.241E+02
Th-234	#B	8.3533E-01	1.8027E+00	1.8039E+00	0.134E+01
Tl-208	F	2.8951E-01	6.8239E-02	7.7465E-02	0.937E-02
U-235	#B	-2.2416E-02	1.0694E-01	1.0695E-01	0.560E-01

- All peaks for activity calculation had bad shape.
* - Activity omitted from total
& - Activity omitted from total and all peaks had bad shape.
< - MDA value printed.
A - Activity printed, but activity < MDA.
B - Activity < MDA and failed test.
C - Area < Critical level.
F - Failed fraction or key line test.
H - Halflife limit exceeded

---------- S U M M A R Y ----------

Total Activity (40.8 to 3243.7 keV) 1.230E+01 pCi/g

Laboratory: New World Technology

ORTEC g v - i (3263) Npp32 G53W3.10 04-MAY-2010 19:12:42
New World Technology Spectrum name: 1N000444.An1

Sample description
Parcel E 03-PEPI-0018-01 362g
4/22/10 10:30

Acquisition information
Start time: 04-May-2010 17:29:07
Live time: 5400
Real time: 5404

- -

***** S U M M A R Y O F N U C L I D E S I N S A M P L E *****

Nuclide		Time of Count Activity pCi/g	Uncertainty 2 Sigma Counting pCi/g	Total pCi/g	MDA pCi/g
Ac-228		1.9295E+00	2.7651E-01	3.0698E-01	0.107E+00
AM-241	#A	7.8680E-03	7.1738E-02	7.1742E-02	0.551E-01
Bi-212		1.2333E+00	3.5386E-01	3.6369E-01	0.219E+00
BI-214		1.5598E+00	1.8531E-01	2.1238E-01	0.645E-01
CO-60		4.1813E-02	2.8328E-02	2.8469E-02	0.180E-01
CS-137		7.9660E-02	4.3367E-02	4.3696E-02	0.313E-01
EU-152	A	-8.0473E-02	1.1673E-01	1.1693E-01	0.752E-01
EU-154	A	1.9974E-02	4.3805E-02	4.3837E-02	0.378E-01
K-40		7.3783E+00	1.0248E+00	1.1462E+00	0.349E+00
Pa-234	C	8.4212E-02	9.2665E-02	9.2958E-02	0.709E-01
Pb-210	#	1.6071E+00	8.0124E-01	8.1116E-01	0.527E+00
Pb-212		2.0328E+00	1.2464E-01	1.9872E-01	0.566E-01
Pb-214		1.4024E+00	1.5302E-01	1.8321E-01	0.663E-01
RA-226		1.0163E+00	8.5620E-01	8.5964E-01	0.686E+00
Th-230	A	6.1733E-01	6.9277E+00	6.9285E+00	0.573E+01
Th-234		2.9337E+00	1.0744E+00	1.1101E+00	0.902E+00
Tl-208		7.8631E-01	7.2110E-02	1.5908E-01	0.268E-01
U-235		8.2067E-02	5.4880E-02	5.5230E-02	0.457E-01

- All peaks for activity calculation had bad shape.
* - Activity omitted from total
& - Activity omitted from total and all peaks had bad shape.
< - MDA value printed.
A - Activity printed, but activity < MDA.
B - Activity < MDA and failed test.
C - Area < Critical level.
F - Failed fraction or key line test.
H - Halflife limit exceeded

---------- S U M M A R Y ----------

Total Activity (36.6 to 2885.2 keV) 2.208E+01 pCi/g

Laboratory: New World Technology

ORTEC g v - i (3263) Npp32 G53W3.10 30-APR-2010 13:56:53
New World Technology Spectrum name: 2N000300.An1

Sample description
Parcel E 03-PEPI-0019-01 316g
4/26/10 11:30

Acquisition information
Start time: 30-Apr-2010 11:42:39
Live time: 5400
Real time: 5408

- -

***** S U M M A R Y O F N U C L I D E S I N S A M P L E *****

Nuclide		Time of Count Activity pCi/g	Uncertainty 2 Sigma Counting pCi/g	Total pCi/g	MDA pCi/g
Ac-228		1.0993E+00	2.2502E-01	2.3750E-01	0.141E+00
AM-241	#	3.2420E-01	4.3801E-01	4.3896E-01	0.300E+00
Bi-212		1.0151E+00	3.4990E-01	3.5666E-01	0.225E+00
BI-214		1.1170E+00	1.4829E-01	1.6586E-01	0.552E-01
CO-60	#A	-1.1414E-02	4.5657E-01	4.5657E-01	0.143E-01
CS-137		1.2991E-01	4.4845E-02	4.5687E-02	0.285E-01
EU-152	#A	-2.0801E-01	1.9400E-01	1.9480E-01	0.128E+00
EU-154	C	8.7971E-02	8.3421E-02	8.3753E-02	0.636E-01
K-40		6.0271E+00	1.1152E+00	1.1915E+00	0.942E+00
Pa-234	A	9.3053E-02	8.0596E-02	8.1007E-02	0.114E+00
Pb-210	#C	0.0000E+00	9.8949E+00	9.8949E+00	0.000E+00
Pb-212		1.2194E+00	1.2552E-01	1.5612E-01	0.725E-01
PB-214		1.0708E+00	1.8648E-01	2.0172E-01	0.871E-01
RA-226	A	3.6723E-01	1.0041E+00	1.0045E+00	0.831E+00
Th-230	A	9.5696E+00	1.5615E+01	1.5699E+01	0.125E+02
Th-234		1.5088E+00	1.5264E+00	1.5331E+00	0.126E+01
Tl-208		3.5115E-01	7.2001E-02	7.5664E-02	0.395E-01
U-235	C	1.0286E-01	9.2074E-02	9.2402E-02	0.554E-01

- All peaks for activity calculation had bad shape.
* - Activity omitted from total
& - Activity omitted from total and all peaks had bad shape.
< - MDA value printed.
A - Activity printed, but activity < MDA.
B - Activity < MDA and failed test.
C - Area < Critical level.
F - Failed fraction or key line test.
H - Halflife limit exceeded

---------- S U M M A R Y ----------

Total Activity (32.4 to 2597.5 keV) 1.203E+01 pCi/g

Laboratory: New World Technology

ORTEC g v - i (3263) Npp32 G53W3.10 06-MAY-2010 19:14:58
New World Technology Spectrum name: 3N000341.An1

Sample description
Parcel E 03-PEPI-0020-01 374g
4/30/10 13:30

Acquisition information
Start time: 06-May-2010 17:40:54
Live time: 5400
Real time: 5406

- -

***** S U M M A R Y O F N U C L I D E S I N S A M P L E *****

Nuclide		Time of Count Activity pCi/g	Uncertainty 2 Sigma Counting pCi/g	Total pCi/g	MDA pCi/g
Ac-228		2.0518E+00	2.8213E-01	3.1576E-01	0.116E+00
AM-241	A	3.2558E-02	9.0381E-02	9.0427E-02	0.738E-01
Bi-212		1.1878E+00	3.7001E-01	3.7874E-01	0.246E+00
BI-214		1.4877E+00	1.6162E-01	1.8951E-01	0.616E-01
CO-60	#	3.8493E-02	3.1512E-02	3.1619E-02	0.204E-01
CS-137	A	2.4230E-02	4.4593E-02	4.4623E-02	0.358E-01
EU-152	#A	-4.6328E-02	5.3300E-02	5.3445E-02	0.106E+00
EU-154	C	6.1315E-02	4.4234E-02	4.4538E-02	0.608E-01
K-40		1.0402E+01	1.1150E+00	1.3292E+00	0.492E+00
Pa-234	C	1.3179E-01	8.6410E-02	8.7178E-02	0.836E-01
Pb-210		1.2884E+00	1.0231E+00	1.0281E+00	0.668E+00
Pb-212		2.1008E+00	1.2666E-01	2.0403E-01	0.672E-01
PB-214		1.4651E+00	1.7263E-01	2.0218E-01	0.767E-01
RA-226	A	6.7282E-01	1.0432E+00	1.0444E+00	0.854E+00
Th-230	#A	-2.2757E+00	1.2137E+01	1.2143E+01	0.715E+01
Th-234		2.4241E+00	1.2235E+00	1.2450E+00	0.105E+01
Tl-208		7.4039E-01	8.2528E-02	1.5697E-01	0.359E-01
U-235		1.4134E-01	8.6048E-02	8.6709E-02	0.563E-01

- All peaks for activity calculation had bad shape.
* - Activity omitted from total
& - Activity omitted from total and all peaks had bad shape.
< - MDA value printed.
A - Activity printed, but activity < MDA.
B - Activity < MDA and failed test.
C - Area < Critical level.
F - Failed fraction or key line test.
H - Halflife limit exceeded

---------- S U M M A R Y ----------

Total Activity (43.6 to 2779.2 keV) 2.333E+01 pCi/g

Laboratory: New World Technology

ORTEC g v - i (3263) Npp32 G53W3.10 23-JUL-2010 19:08:01
New World Technology Spectrum name: 1N000912.An1

Sample description
Parcel E 03-PEPI-0021-01 382g
7/23/10 10:40

Acquisition information
Start time: 23-Jul-2010 17:36:10
Live time: 5400
Real time: 5403

- -

***** S U M M A R Y O F N U C L I D E S I N S A M P L E *****

Nuclide		Time of Count Activity pCi/g	Uncertainty 2 Sigma Counting pCi/g	Total pCi/g	MDA pCi/g
Ac-228		9.7261E-01	1.7770E-01	1.8998E-01	0.650E-01
AM-241	#A	-2.2463E-03	8.1295E-02	8.1296E-02	0.346E-01
Bi-212		9.9267E-01	4.3711E-01	4.4230E-01	0.196E+00
BI-214		8.1716E-01	1.4730E-01	1.5700E-01	0.555E-01
CO-60	#A	-2.3992E-02	5.9727E-02	5.9749E-02	0.200E-01
CS-137		1.2220E-01	4.0439E-02	4.1265E-02	0.257E-01
EU-152	A	-7.5233E-02	6.4395E-02	6.4710E-02	0.597E-01
EU-154	A	3.0767E-02	2.7383E-02	2.7507E-02	0.357E-01
K-40		7.7395E+00	9.2668E-01	1.0718E+00	0.391E+00
Pa-234		1.1078E-01	9.2108E-02	9.2617E-02	0.605E-01
Pb-210	#	5.8746E-01	6.4246E-01	6.4413E-01	0.448E+00
Pb-212		8.1963E-01	8.1831E-02	1.0291E-01	0.440E-01
Pb-214		7.9980E-01	1.1185E-01	1.2575E-01	0.523E-01
RA-226		8.8232E-01	7.1424E-01	7.1735E-01	0.570E+00
Th-230	#A	3.2790E+00	7.3024E+00	7.3235E+00	0.479E+01
Th-234	#	1.3326E+00	9.6146E-01	9.6978E-01	0.743E+00
Tl-208		3.8678E-01	7.2795E-02	1.0082E-01	0.794E-02
U-235	C	4.0532E-02	4.7045E-02	4.7145E-02	0.381E-01

- All peaks for activity calculation had bad shape.
* - Activity omitted from total
& - Activity omitted from total and all peaks had bad shape.
< - MDA value printed.
A - Activity printed, but activity < MDA.
B - Activity < MDA and failed test.
C - Area < Critical level.
F - Failed fraction or key line test.
H - Halflife limit exceeded

---------- S U M M A R Y ----------

Total Activity (36.6 to 2885.2 keV) 1.498E+01 pCi/g

Laboratory: New World Technology

ORTEC g v - i (3263) Npp32 G53W3.10 03-SEP-2010 17:03:57
New World Technology Spectrum name: 6N000622.An1

Sample description
Parcel E 03-PEPI-0022-01 368g
9/01/10 12:50

Acquisition information
Start time: 03-Sep-2010 15:32:03
Live time: 5400
Real time: 5409

- -

***** S U M M A R Y O F N U C L I D E S I N S A M P L E *****

Nuclide		Time of Count Activity pCi/g	Uncertainty 2 Sigma Counting pCi/g	Total pCi/g	MDA pCi/g
Ac-228		3.7392E-01	1.1231E-01	1.1525E-01	0.836E-01
AM-241	#A	-1.1481E-02	5.3392E-01	5.3393E-01	0.346E-01
Bi-212		2.9047E-01	2.5804E-01	2.5879E-01	0.200E+00
BI-214		4.9122E-01	1.2698E-01	1.3112E-01	0.540E-01
CO-60	#A	-1.2154E-02	2.9680E-02	2.9691E-02	0.194E-01
CS-137		5.0819E-02	3.6352E-02	3.6512E-02	0.276E-01
EU-152	A	-4.4443E-02	2.7368E-02	2.7627E-02	0.809E-01
EU-154	A	-5.9342E-02	9.8623E-02	9.8751E-02	0.509E-01
K-40		9.3299E+00	1.1195E+00	1.2941E+00	0.706E+00
Pa-234		1.2248E-01	8.4506E-02	8.5184E-02	0.637E-01
Pb-210		9.2945E-01	7.9394E-01	7.9723E-01	0.514E+00
Pb-212		3.5162E-01	6.6988E-02	7.2140E-02	0.462E-01
PB-214		4.0548E-01	9.4487E-02	9.8875E-02	0.466E-01
RA-226	#A	-9.4762E-02	1.2415E+00	1.2416E+00	0.569E+00
Th-230	#A	3.4798E+00	5.8895E+00	5.9190E+00	0.419E+01
Th-234	A	6.6747E-01	1.1427E+00	1.1445E+00	0.782E+00
Tl-208	#	1.4285E-01	5.7015E-02	6.2565E-02	0.430E-01
U-235		7.2936E-02	4.5305E-02	4.5639E-02	0.364E-01

- All peaks for activity calculation had bad shape.
* - Activity omitted from total
& - Activity omitted from total and all peaks had bad shape.
< - MDA value printed.
A - Activity printed, but activity < MDA.
B - Activity < MDA and failed test.
C - Area < Critical level.
F - Failed fraction or key line test.
H - Halflife limit exceeded

---------- S U M M A R Y ----------

Total Activity (33.3 to 2659.2 keV) 1.244E+01 pCi/g

Laboratory: New World Technology

ORTEC g v - i (3263) Npp32 G53W3.10 03-SEP-2010 15:46:18
New World Technology Spectrum name: 7N000579.An1

Sample description
Parcel E 03-PEPI-0022-02 379g
9/01/10 13:10

Acquisition information
Start time: 03-Sep-2010 14:59:05
Live time: 2700
Real time: 2704

- -

***** S U M M A R Y O F N U C L I D E S I N S A M P L E *****

Nuclide		Time of Count Activity pCi/g	Uncertainty Counting pCi/g	2 Sigma Total pCi/g	MDA pCi/g
Ac-228		6.1405E-01	2.5567E-01	2.5917E-01	0.131E+00
AM-241	#A	1.1869E-02	6.8892E-02	6.8900E-02	0.594E-01
Bi-212	A	2.0453E-01	4.1660E-01	4.1683E-01	0.330E+00
BI-214		5.1148E-01	1.4281E-01	1.4680E-01	0.593E-01
CO-60	#A	-5.7964E-03	1.0788E-02	1.0795E-02	0.253E-01
CS-137	A	3.7216E-02	6.0894E-02	6.0946E-02	0.476E-01
EU-152	A	-1.8243E-01	7.5219E-01	7.5234E-01	0.126E+00
EU-154	A	2.4281E-02	4.1504E-02	4.1555E-02	0.737E-01
K-40		1.3390E+01	1.8591E+00	2.0794E+00	0.104E+01
Pa-234	C	2.1150E-01	1.4309E-01	1.4428E-01	0.109E+00
Pb-210		7.6485E-01	9.7061E-01	9.7247E-01	0.692E+00
Pb-212		2.4815E-01	1.0315E-01	1.0487E-01	0.784E-01
PB-214		3.6835E-01	1.1594E-01	1.1892E-01	0.712E-01
RA-226	A	5.8565E-01	1.1424E+00	1.1433E+00	0.930E+00
Th-230	#A	-7.2881E+00	4.8863E+01	4.8879E+01	0.752E+01
Th-234	#A	-1.2625E-01	1.6174E+00	1.6175E+00	0.116E+01
Tl-208	C	1.0087E-01	6.3980E-02	6.6516E-02	0.733E-01
U-235	C	7.0074E-02	1.2170E-01	1.2181E-01	0.652E-01

- All peaks for activity calculation had bad shape.
* - Activity omitted from total
& - Activity omitted from total and all peaks had bad shape.
< - MDA value printed.
A - Activity printed, but activity < MDA.
B - Activity < MDA and failed test.
C - Area < Critical level.
F - Failed fraction or key line test.
H - Halflife limit exceeded

---------- S U M M A R Y ----------

Total Activity (42.2 to 3353.9 keV) 1.513E+01 pCi/g

Laboratory: New World Technology

ORTEC g v - i (3263) Npp32 G53W3.10 28-SEP-2010 23:16:08
New World Technology Spectrum name: 5N000686.An1

Sample description
Parcel E 03-PEPI-0023-01 396g
9/28/10 11:30

Acquisition information
Start time: 28-Sep-2010 22:29:33
Live time: 2700
Real time: 2702

- -

***** S U M M A R Y O F N U C L I D E S I N S A M P L E *****

Nuclide		Time of Count Activity pCi/g	Uncertainty Counting pCi/g	2 Sigma Total pCi/g	MDA pCi/g
Ac-228		4.2494E-01	1.9739E-01	1.9956E-01	0.119E+00
AM-241	#A	-6.3620E-03	7.2397E-02	7.2397E-02	0.902E-02
Bi-212	A	1.5610E-02	3.4649E-01	3.4649E-01	0.295E+00
BI-214		5.4855E-01	1.4037E-01	1.4503E-01	0.563E-01
CO-60	#A	-3.0122E-02	7.8959E-01	7.8959E-01	0.258E-01
CS-137		8.3764E-02	3.9435E-02	3.9835E-02	0.231E-01
EU-152	A	8.4635E-03	5.9370E-03	5.9801E-03	0.104E+00
EU-154	C	1.4318E-01	8.4542E-02	8.5407E-02	0.467E-01
K-40		1.1688E+01	1.5273E+00	1.7303E+00	0.804E+00
Pa-234	C	1.0119E-01	9.3073E-02	9.3493E-02	0.976E-01
Pb-210	#A	-1.2568E-01	9.3338E-01	9.3344E-01	0.582E+00
Pb-212		2.8730E-01	9.9459E-02	1.0184E-01	0.644E-01
Pb-214		4.2312E-01	1.1492E-01	1.1887E-01	0.627E-01
RA-226	A	3.9999E-01	9.4187E-01	9.4235E-01	0.770E+00
Th-230	#A	-5.0878E-01	7.3845E+00	7.3850E+00	0.269E+01
Th-234	#A	-3.7733E-01	1.7821E+00	1.7824E+00	0.107E+01
Tl-208	C	1.1670E-01	5.9505E-02	6.3117E-02	0.433E-01
U-235	A	4.7730E-02	7.9830E-02	7.9912E-02	0.505E-01

- All peaks for activity calculation had bad shape.
* - Activity omitted from total
& - Activity omitted from total and all peaks had bad shape.
< - MDA value printed.
A - Activity printed, but activity < MDA.
B - Activity < MDA and failed test.
C - Area < Critical level.
F - Failed fraction or key line test.
H - Halflife limit exceeded

---------- S U M M A R Y ----------

Total Activity (37.9 to 3020.7 keV) 1.346E+01 pCi/g

Laboratory: New World Technology

APPENDIX D

EPA ACCEPTANCE OF HUNTERS POINT ON-SITE LABORATORY RESULTS FOR RADIOLOGICAL ANALYSIS
(on CD only)

This page intentionally left blank.

UNITED STATES ENVIRONMENTAL PROTECTION AGENCY
REGION 9
75 Hawthorne Street
San Francisco CA 94105-3901

December 15, 2009

Rufus Howell, Deputy Director
Center for Environmental Health
California Department of Public Health
1500 Capitol Avenue, 5th Floor, Suite 72.525
P.O. Box 997377, MS 0511
Sacramento, CA 95814

Re: EPA acceptance of Hunters Point on-site laboratory results for radiological analysis

Dear Mr. Howell:

At a meeting regarding radiological cleanup of the former Hunters Point Shipyard on October 9, CDPH requested that EPA submit a letter explaining our reasons for accepting the Navy's on-site laboratory results for verification of the completion of the radiological soil removal actions at the former shipyard. The following is a brief history of the development of the remediation goal (RG), discussion of analysis methods, and an explanation of why the Navy's methods provide sufficient data quality to allow EPA to make risk-based determinations that the results of the removals are protective of human health and the environment.

Project Description

The remediation at Hunters Point includes excavation of miles of sewer and storm lines to investigate the pipes and surrounding soils for potential contamination caused by leaks of radiological materials from the pipes. The trenches generally range in depth from eight to twenty feet below the ground surface. In addition to the storm and sewer line work, the Navy is clearing multiple buildings and surface sites that have the potential for radiological contamination. The work at Hunters Point poses unique difficulties in that such extensive excavations result in the need to analyze thousands of soil samples in a relatively short time. This necessitates using a dedicated field laboratory that can analyze the required number of samples within a reasonable time frame.

The investigations and final confirmation samples are based on the Multi-Agency Radiation Survey and Site Investigation Manual (MARSSIM). The implementation of the MARSIMM approach, called the Final Status Survey, for soil remediation at Hunters Point typically involves taking 18 confirmation samples per Survey Unit. The Survey Unit is a measurement area within a trench or surface site with a maximum surface area of 1,000 square meters. Even though MARSSIM allows for some averaging of the results over a Survey Unit, the Navy has agreed with the regulators that a site will not be proposed for free release until after all Final Status Survey samples for a Survey Unit have reported analytical results below the remediation goal (RG).

Site-Specific Remedial Goal for ^{226}Ra

Bay Area soil has relatively low natural background concentrations of ^{226}Ra. The Navy, EPA and State of California have agreed on a ^{226}Ra background concentration of 0.485 pCi/gm for the storm and sewer line removal action at the former Hunters Point Naval Shipyard. The background used for the building and surface soil sites at Hunters Point varies slightly above or below this number, depending on the soil type. The Navy, EPA and State of California agreed upon a ^{226}Ra remediation goal of 1.0 pCi/gm above background for all Navy sites in the State of California. Thus, the operational remediation endpoint for ^{226}Ra in the storm and sewer lines at Hunters Point is 1.485 pCi/gm. This cleanup goal corresponds to an incremental risk above background of approximately $8x10^{-5}$, or a dose of approximately 4 millirems/year (using EPA's radiological PRG calculator). EPA policy allows a site to be released for unrestricted use at dose levels below 15 millirems/year.

Verification by Measurement Using Gamma Spectrometry

There are two primary methods for measuring ^{226}Ra in soil, both using gamma spectrometry and based on the EPA Method 901.1. The Navy's on-site laboratory at Hunters Point measures ^{226}Ra in soil samples by counting the 186 keV gamma ray emissions from the sample. This approach provides the most direct technique for measuring ^{226}Ra in soil samples and final results can usually be obtained overnight. The on-site laboratory has consistently managed to obtain detection limits below the project Remediation Goal of 1.485 pCi/gm. However, the measurement uncertainty can be as high as 100% when the measured results are near or below the detection limit.

In addition to the measurements obtained from the on-site laboratory, the Navy also relies on backup measurements from its off-site quality assurance laboratory. That laboratory also measures ^{226}Ra by gamma spectrometry (EPA Method 901.1), but instead of measuring ^{226}Ra directly at 186 keV, the laboratory measures ^{214}Bi at 609 keV. ^{214}Bi is a decay, or in-growth, product of ^{226}Ra . Since the 609 keV energy signature of ^{214}Bi is more prominent than the 186 keV energy signature of ^{226}Ra, the measurements provide slightly greater precision and lower detection limits. However, the sample must be sealed and then stored for 22 days before ^{214}Bi reaches secular equilibrium with ^{226}Ra. A laboratory turnaround time of 22 days is acceptable for final quality assurance verification, but it is not feasible for making daily decisions about backfilling trenches after excavation.

Navy Efforts to Investigate and Account for Reported Uncertainty in the Measurements

A possible option to improve the analysis precision of ^{226}Ra using the 186 keV method can be to increase the counting times. Such improvements are not linear, however, and depend upon the level of ^{226}Ra in the soil. At best, the detection limit is decreased by half when the counting time is increased by a factor of four.

To investigate the effect of counting time on uncertainty for the Hunters Point samples, the Navy laboratory repeated analyses of a single sample that had initial results near the remediation goal ten times and factored an uncertainty based on the nearness of the ten reported uncertainties. While the reported uncertainties were close to 100%, the factored uncertainty was approximately 3%. This demonstrated the reliability of the data produced by the Navy laboratory and satisfied EPA that using the actual counted activities reported by the on-site lab without regard to the reported two-sigma value is appropriate.

To help provide a more conservative calculation of the dose and risk, the Navy calculates dose and risk based on the measured activities and also on the higher of the measured activities and the Method Detection Limits (MDL) for every survey unit. The reported uncertainty is highest when the measured activity is below the MDL, so the potential dose calculated using the highest of the measured activity and the MDL provides a reasonable upper bound on the uncertainty. EPA policy sets the maximum allowable dose at 15 millirems/year for cleanup actions at Superfund sites. For the Hunters Point project, both the dose based on the measured activity and the potential dose that allows for uncertainty has been below 15 millirems/year for each of the completed Final Status Surveys.

Summary and Recommendations

When EPA inspected the on-site laboratory at Hunters Point, we found its procedures, conduct and operational performance to be exemplary, and every reasonable step being taken to show that the site-specific RG is being met.

EPA accepts the Navy's results from the Navy's lab at Hunters Point in conjunction with the off-site quality assurance lab as the basis for a final closeout decision for several reasons. Most importantly, the RG corresponds to a dose of 4 mrem/year, so even if the uncertainty approaches ±100%, the result would still be below EPA's acceptable level. Thus, any slight improvement that might be offered by switching to the in-growth method would have little effect on the final risk management decision.

In addition, the measurements are taken after a trench and primary source have been excavated and removed and a site is not proposed for free release until all measured results from each individual sample in the status survey unit are below the RG. We believe this provides an extra level of protectiveness since EPA evaluates risk over the entire status survey area. The reported uncertainty associated with some individual samples will have a negligible effect on the total risk. In addition, the trenches are backfilled with clean soil. Thus, the risk calculated over any reasonable exposure area would be essentially equal to background. Finally, the Navy submits ten percent of the samples to the off-site lab for confirmation analysis using the in-growth method. The off-site lab results must also be below the RG for EPA to approve the Final Status Survey conclusions.

We appreciate this opportunity to work with you on the cleanup at the former Hunters Point Shipyard. Please call me at (415) 972-3438 or Mark Ripperda of my staff at (415) 972-3028 if you would like to discuss radiological issues at Hunters Point.

Sincerely,

Michael M. Montgomery
Assistant Director of Federal Facilities
and Site Cleanup Branch

APPENDIX E

INSTALLATION RESTORATION PROGRAM SITE CHEMICAL LABORATORY ANALYTICAL RESULTS AND COMPARISON (on CD only)

This page intentionally left blank.

STORM/SEWER PIPE EXCAVATION
IR Site Stockpile Tracking and Disposition

Hunters Point Shipyard	Parcel E

Selected laboratory analyses are based on (*check all that apply*):
- ☒ IR Site # 04 and 72 SAP Chemicals of Concern
- ☐ Construction Summary Report
- ☐ CSR Addendum

Chemical Stockpile Sampling

Unit No.	Unit Volume	COC No.	Date Sampled	Date Shipped
See Attached Sheet for affected ES Units				

Analytical Results

Date Analytical Results Received: 4/21/2011	Reviewed By: Sabina Sudoko

- ☐ Material meets industrial PRG/HPAL criteria but exceeds residential PRG criteria
- ☐ Material meets residential PRG criteria
- ☒ Material exceeds industrial PRG/HPAL criteria
- ☒ All analytical results are attached

Comments/Elevated Concentrations:

See attached E-mail and data.

This IR determination will apply to any future IR04 and IR72 ES units generated

.

Final Disposition

☐ Industrial/Open Space Backfill	☐ Residential Backfill	☒ Contaminated

Comments/Explanation:

All excavated soils from IR-35 will be disposed of off-site and should not be used as trench backfill.

Approval

Project Manager/Designee (signature):	Date: 4/21/2011

TETRA TECH EC, INC.

ES Unit	RSY Pad	Client	Origin	IR	Truckloads	Remedated Soil	Cubic Yards
448	E27A	Tt	WA20	72	7	0	84
449	E05	Tt	WA16/20	4	21	0	252

Weingarz, Richard

From: Sudoko, Sabina
Sent: Thursday, April 21, 2011 12:16 PM
To: Weingarz, Richard
Cc: Gorman, Andrew
Subject: Cto4 - Chem - F1D010496

Richard,

Data for the above is in SharePoint - chem folder..

Cto4_chem_IR04,72,57_F1D010496_040111_042011

The data has been reviewed against the "Project Action Limits" listed in Worksheet #15 of the Basewide Radiological Support Hunters Point Shipyard Final SAP (January 2011). All results are below action levels (for analytes that have an action level listed) with the exception of the following:

SVOCs

- benzo(a)pyrene for samples listed below exceeded the action level of 210 ug/kg

  04-PE-IR04/72-001 (F1D010496-001)
  04-PE-IR04/72-002 (F1D010496-002)
  04-PE-IR57-001 (F1D010496-006)

PCBS

- aroclor 1260 for samples listed below exceeded the action level of 740 ug/kg.

  04-PE-IR04/72-002 (F1D010496-002)
  04-PE-IR04/72-003 (F1D010496-003)

Metals

- arsenic in all samples exceeded the action level of 1.6 mg/kg

Thank You..

Sabina R. Sudoko | **Chemist**
Direct: 949.809.5022 | Fax: 949.809.5004
sabina.sudoko@tetratech.com

Tetra Tech EC | Sciences
17885 Von Karman Ave., Suite 500 | Irvine, CA 92614 - 6213 | www.tetratech.com

PLEASE NOTE: This message, including any attachments, may include confidential and/or inside information. Any distribution or use of this communication by anyone other than the intended recipient is strictly prohibited and may be unlawful. If you are not the intended recipient, please notify the sender by replying to this message and then delete it from your system.

Think Green - Not every email needs to be printed.

TETRA TECH
1230 Columbia Street, Suite 500
San Diego, CA 92101 (619) 234-8696

NUMBER 25069

CHAIN-OF-CUSTODY RECORD

ENTERED

PROJECT NAME	HUNTERS POINT
PROJECT LOCATION	SAN FRANCISCO, CA
SAMPLER NAME	ANDREW GORMAN
PROJECT CONTACT	SABINA SUDUKO
PURCHASE ORDER NO.	1059241-12
PROJECT NO	40004 0400
AGENCY NUMBER	87423874 7765
PROJECT CONTACT PHONE NUMBER	949.809.5022 *
LABORATORY NAME	TEST AMERICA ST. LOUIS
LABORATORY ID (FOR LABORATORY)	FIDO10496

Project Information Section
Do not submit to Laboratory

ANALYSES REQUIRED

SAMPLE ID	DATE COLLECTED	TIME COLLECTED	NO OF CONTAINER	LEVEL 3	LEVEL 4	TYPE	TAT	VOCs	SVOC + 1,4-Dioxane	PCBs	TOC	METALS	TPH-D	TPH-G	TRPH 1664	SVOC	COMMENTS	LOCATION	DEPTH START	DEPTH END	QC
04-PF-I204/72-001	3-31-11	1040	8	X		5	10	X	X	X	X	X	X	X				ES 448	0	6"	REG
04-PF-I204/72-002		1050	8	X			10	X	X	X	X	X	X	X				ES 449			
04-PF-I204/72-003		1100	8	X			10	X	X	X	X	X	X	X				ES 449			
04-PF-I204/72-004		1110	8	X			10	X	X	X	X	X	X	X				ES 449			
04-PF-I204/72-005		1115	8	X			10	X	X	X	X	X	X	X				ES 449			
04-PC-I257-001		1125	5	X			10	X		X	X	X	X		X	X		ES 455			
04-PC-I257-002		1130	5	X			10	X		X	X	X	X		X	X		ES 460			
04-PC-I257-003		1135	5	X			10	X		X	X	X	X		X	X		ES 455			
04-PC-I257-004		1140	5	X			10	X		X	X	X	X		X	X		ES 455			
04-PC-I257-005		1150	5	X			10	X		X	X	X	X		X	X		ES 460			

RELINQUISHED BY (Signature)	DATE 3-31-11	RECEIVED BY (Signature)	LABORATORY INSTRUCTIONS/COMMENTS: * added 3/31/11 Suduko
COMPANY TTEC	TIME 1620	COMPANY FedEx	
RELINQUISHED BY (Signature)	DATE	RECEIVED BY (Signature)	COMPOSITE DESCRIPTION
COMPANY	TIME	COMPANY	
RELINQUISHED BY (Signature)	DATE	RECEIVED BY (Signature)	SAMPLE CONDITION UPON RECEIPT (FOR LABORATORY)
COMPANY	TIME	COMPANY	TEMPERATURE: ____ SAMPLE CONDITION: ☐ INTACT ☐ BROKEN COOLER SEAL: ☐ INTACT ☐ BROKEN

SAMPLING COMMENT:

White - Laboratory; Pink - Laboratory; Canary - Project File; Manila - Data Management

TestAmerica
THE LEADER IN ENVIRONMENTAL TESTING

TestAmerica Laboratories, Inc.

ANALYTICAL REPORT

PROJECT NO. CTO 4

HPS 40440004

Lot #: F1D010496

Sabina Sudoko

Tetra Tech EC, Inc.
1230 Columbia Street
Suite 750
San Diego, CA 92101

TESTAMERICA LABORATORIES, INC.

Erika Starman
Project Manager

April 20, 2011

13715 Rider Trail North Earth City, MO 63045 **tel** 314.298.8566 **fax** 314.298.8757 **www.testamericainc.com**

ED_006787_00017608-00607

Case Narrative
LOT NUMBER: F1D010496

This report contains the analytical results for the 10 samples received under chain of custody by TestAmerica St. Louis on April 1, 2011. These samples are associated with your HPS 40440004 project.

The analytical results included in this report meet all applicable quality control procedure requirements except as noted on the following page.

The test results in this report meet all NELAP requirements for parameters in which accreditations are held by TestAmerica St. Louis. Any exceptions to NELAP requirements are noted in the case narrative. **TestAmerica St. Louis' Florida certification number is E87689.** The case narrative is an integral part of this report.

This report shall not be reproduced, except in full, without the written approval of the laboratory.

RPD and RER results that are outside QC limits for non-detected analytes are statistically invalid. Non-detect results were duplicated, and the RPD/RER can be ignored.

Sample receiving issues are noted on the CUR form and written communications pertaining to these issues are included in the CoC section of the report.

All chemical analysis results are based upon sample as received, wet weight, unless noted otherwise. Ra-226 analysis by gamma spectroscopy is performed on an as-received basis unless sample containers were received cracked or broken. Analysis parameters for cracked or broken samples will be listed in the narrative.

Ra-226 results analyzed by method EPA 901.1 MOD were calculated and reported from the 46.09 percent abundant 609.31 KeV line of Bi-214.

Observations/Nonconformances

Reference the chain of custody and condition upon receipt report for any variations on receipt conditions and temperature of samples on receipt.

Semivolatile Organic Compounds by GC/MS (SW846 8270)

Batch: 1096067
The internal standard recovery is outside the lower QC limit, indicating a potential positive bias. There were no target analytes associated with this internal standard observed above the reporting limit in the sample; therefore the sample data was not adversely affected by this excursion.

Affected Samples:
F1D010496 (1): 04-PE-IR04/72-001
F1D010496 (2): 04-PE-IR04/72-002
F1D010496 (3): 04-PE-IR04/72-003
F1D010496 (4): 04-PE-IR04/72-004
F1D010496 (5): 04-PE-IR04/72-005
F1D010496 (6): 04-PC-IR57-001
F1D010496 (7): 04-PC-IR57-002
F1D010496 (8): 04-PC-IR57-003
F1D010496 (9): 04-PC-IR57-004
F1D010496 (10): 04-PC-IR57-005

Volatile Organics by GC/MS (SW-846 8260)

Batch: 1097312
The MS recoveries are within the QC limits. The MSD recoveries for Isopropylbenzene, Cyclohexanone, 1,1,2,2-Tetrachloroethane and 1,2,3-Trichloropropane outside the upper QC limit, indicating a potential positive bias for the analytes. The analytes were not observed above the reporting limit in the associated samples; therefore the sample data was not adversely affected by this excursion.

The MSD recovereis for Methylcyclohexane, Hexachlorobutadiene and n-Hexane are outside the lower QC limit. These analytes are not target compounds requested by the client.

The analytes previously listed have RPD's outside the QC limits. Additionally, Vinyl acetate, 4-Methyl-2-pentanone, Bromoform, trans-1,4-Dichloro-2-butene and 1,2-Dibromo-3-chloropropane have RPD's outside the QC limits, but the recoveries are within the QA limits. Upon reviewing the internal standards for both the MS/MSD analysis, it was noted that the recovery for 1,4-Dichlorobenzene-d4 (while still within the allowable QC limits) is lower than the MS by 35.38%. This difference is significant enough to explain the failed RPD and recovery. Method performance is demonstrated by the remaining acceptable MS/MSD recoveries and LCS recoveries. The original sample results are provided.

The MSD surrogate(s) recovery is outside the upper QC limit, indicating a potential positive bias. There were no target analytes associated with this surrogate observed above the reporting limit in the sample; therefore the sample data was not adversely affected by this excursion. The original sample results are provided.

Affected Samples:
F1D010496 (1): 04-PE-IR04/72-001
F1D010496 (2): 04-PE-IR04/72-002
F1D010496 (3): 04-PE-IR04/72-003
F1D010496 (4): 04-PE-IR04/72-004
F1D010496 (5): 04-PE-IR04/72-005
F1D010496 (6): 04-PC-IR57-001
F1D010496 (7): 04-PC-IR57-002

Batch: 1097312
The surrogate(s) recovery is outside the upper QC limit, indicating a potential positive bias. There were no target analytes associated with this surrogate observed above the reporting limit in the sample; therefore the sample data was not adversely affected by this excursion. The original sample results are provided.

Affected Samples:
F1D010496 (2): 04-PE-IR04/72-002 F1D010496 (3): 04-PE-IR04/72-003
F1D010496 (4): 04-PE-IR04/72-004 F1D010496 (5): 04-PE-IR04/72-005
F1D010496 (6): 04-PC-IR57-001

Batch: 1097312
The internal standard(s) recovery is outside the lower QC limit, indicating a potential positive bias. There were no target analytes associated with this internal standard observed above the reporting limit in the sample; therefore the sample data was not adversely affected by this excursion. The original sample results are provided.

Affected Samples:
F1D010496 (2): 04-PE-IR04/72-002 F1D010496 (3): 04-PE-IR04/72-003
F1D010496 (4): 04-PE-IR04/72-004 F1D010496 (5): 04-PE-IR04/72-005

Batch: 1101275
The CCV recovery was outside the upper QC limit (greater than 20% D) for Vinyl acetate and 2-Nitropropane indicating a potential high bias for those analytes in the samples associated with this CCV. These analytes were not detected above the reporting limit or were not target analytes in the associated samples.

There was insufficient sample volume to perform MS/MSD analysis. A matrix spike and LCS/LCSD were performed to demonstrate matrix accuracy and replicate precision.

The LCS/LCSD RPD for 1,1-Dichloroethene is not within method acceptance criteria. LCS/LCSD recoveries are within QC limits demonstrating good extraction performance in the sample matrix.

The internal standard recovery for 1,4-DCB-d4 is outside the lower QC limit, indicating a potential positive bias. There were no target analytes associated with this internal standard observed above the reporting limit in the sample; therefore the sample data was not adversely affected by this excursion.

Affected Samples:
F1D010496 (8): 04-PC-IR57-003 F1D010496 (9): 04-PC-IR57-004
F1D010496 (10): 04-PC-IR57-005

Batch: 1101275
The surrogate recoveries for Toluene-d8 and 4-BFB are outside the upper QC limit, indicating a potential positive bias. There were no target analytes associated with this surrogate observed above the reporting limit in the sample; therefore the sample data was not adversely affected by this excursion. The original sample results are provided.

Affected Samples:
F1D010496 (8): 04-PC-IR57-003

<u>PCB's (SW846 8082)</u>

Batch: 1096070
The sample surrogate recovery is outside the upper QC limits. The excursion in samples -002, -003, and -004 are likely the result of high concentrations of target analytes near the elution range of the surrogate

causing an elevated response. The excursion in sample -007 is due to matrix interference which is chromatographically evident in the sample.

Affected Samples:
F1D010496 (2): 04-PE-IR04/72-002
F1D010496 (3): 04-PE-IR04/72-003
F1D010496 (4): 04-PE-IR04/72-004
F1D010496 (7): 04-PC-IR57-002

Batch: 1096070
The SW-846 method 8082 requires 3-5 peaks be used for PCB quantitation. Due to the presence of multiple aroclors or matrix interference in the sample, only 3-4 peaks were used for quantitation.

Affected Samples:
F1D010496 (6): 04-PC-IR57-001

Batch: 1096070
The sample was analyzed at a dilution due to high concentrations of target analytes. The reporting limit has been adjusted only for those targets reported from the dilution run. When performing a sample dilution due to high concentrations of target analytes, the surrogates were diluted below reliable detection, making QC recoveries unreliable.

Affected Samples:
F1D010496 (3): 04-PE-IR04/72-003
F1D010496 (4): 04-PE-IR04/72-004

Extractable Petroleum Hydrocarbons (DRO) (SW-846 8015 MOD)

Batch: 1096069
The samples were analyzed at a dilution due to high concentrations of target analytes. The sample extracts were brown which analyzed undiluted has historically caused instrumentation problems. The reporting limit has been adjusted for the dilutions since no analysis at a lesser dilution was performed.

Affected Samples:
F1D010496 (2): 04-PE-IR04/72-002
F1D010496 (5): 04-PE-IR04/72-005
F1D010496 (9): 04-PC-IR57-004
F1D010496 (10): 04-PC-IR57-005

Batch: 1096069
The samples were analyzed at a dilution due to high concentrations of target analytes. The sample extracts were dark and oily which analyzed undiluted has historically caused instrumentation problems. The surrogate recoveries were diluted out as a result of the dilutions. The reporting limit has been adjusted for the dilutions since no analysis at a lesser dilution was performed.

Affected Samples:
F1D010496 (3): 04-PE-IR04/72-003
F1D010496 (4): 04-PE-IR04/72-004
F1D010496 (6): 04-PC-IR57-001
F1D010496 (7): 04-PC-IR57-002
F1D010496 (8): 04-PC-IR57-003

Mercury in Solid Waste (Manual Cold-Vapor) (SW846 7471)

Batch: 1095108
The MS (MSD) recovery for mercury is outside the established QC limits. The RPD is within method acceptance criteria indicating matrix interference. Method performance is demonstrated by acceptable LCS recovery.

Affected Samples:
F1D010496 (1): 04-PE-IR04/72-001
F1D010496 (2): 04-PE-IR04/72-002
F1D010496 (3): 04-PE-IR04/72-003
F1D010496 (4): 04-PE-IR04/72-004
F1D010496 (5): 04-PE-IR04/72-005
F1D010496 (6): 04-PC-IR57-001
F1D010496 (7): 04-PC-IR57-002
F1D010496 (8): 04-PC-IR57-003
F1D010496 (9): 04-PC-IR57-004
F1D010496 (10): 04-PC-IR57-005

Batch: 1095108
The sample was analyzed at a dilution due to high concentrations of mercury. The reporting limit has been adjusted only for those targets reported from the dilution run.

Affected Samples:
F1D010496 (4): 04-PE-IR04/72-004

ICP-MS (SW846-6020)

Batch: 1094046
The samples were analyzed at a dilution due to high concentrations of target and interfering analytes. The reporting limit has been adjusted for the dilution.

Affected Samples:
F1D010496 (2): 04-PE-IR04/72-002
F1D010496 (3): 04-PE-IR04/72-003
F1D010496 (4): 04-PE-IR04/72-004
F1D010496 (7): 04-PC-IR57-002

Batch: 1094046
The MS (MSD) recovery for antimony is outside the established QC limits. The RPD is within method acceptance criteria indicating matrix interference. Method performance is demonstrated by acceptable LCS recovery.

Affected Samples:
F1D010496 (1): 04-PE-IR04/72-001
F1D010496 (2): 04-PE-IR04/72-002
F1D010496 (3): 04-PE-IR04/72-003
F1D010496 (4): 04-PE-IR04/72-004
F1D010496 (5): 04-PE-IR04/72-005
F1D010496 (6): 04-PC-IR57-001
F1D010496 (7): 04-PC-IR57-002
F1D010496 (8): 04-PC-IR57-003
F1D010496 (9): 04-PC-IR57-004
F1D010496 (10): 04-PC-IR57-005

N-Hexane Extractable Material, Silica Gel Treated (CFR136A 1664A)

Batch: 1095168
The MS recovery for SGT HEM Batch #1095168 Sample F1D010496-006 is outside the established QC limits. Matrix interference is physically evident in the sample, due to a color change and precipitate forming upon addition of the spiking solution. Method performance is demonstrated by acceptable LCS recovery.

Affected Samples:
F1D010496 (6): 04-PC-IR57-001
F1D010496 (7): 04-PC-IR57-002
F1D010496 (8): 04-PC-IR57-003
F1D010496 (9): 04-PC-IR57-004
F1D010496 (10): 04-PC-IR57-005

N-Hexane Extractable Material (CFR236A 1664A)

Batch: 1101397
The MS recovery for HEM Batch #1101397, Sample F1D010496-001 is outside the established QC limits. Matrix interference is physically evident in the sample, due to a color change being observed as well as a compacting of the soil once the spike was added. Method performance is demonstrated by acceptable LCS recovery.

Affected Samples:
F1D010496 (1): 04-PE-IR04/72-001
F1D010496 (2): 04-PE-IR04/72-002
F1D010496 (3): 04-PE-IR04/72-003
F1D010496 (4): 04-PE-IR04/72-004
F1D010496 (5): 04-PE-IR04/72-005
F1D010496 (6): 04-PC-IR57-001
F1D010496 (7): 04-PC-IR57-002
F1D010496 (8): 04-PC-IR57-003
F1D010496 (9): 04-PC-IR57-004
F1D010496 (10): 04-PC-IR57-005

There were no other nonconformances or observations noted with any analysis on this lot.

METHODS SUMMARY

F1D010496

PARAMETER	ANALYTICAL METHOD	PREPARATION METHOD
Extractable Petroleum Hydrocarbons	SW846 8015 MOD	SW846 3550
ICP-MS (6020)	SW846 6020	SW846 3050
Mercury in Solid Waste (Manual Cold-Vapor)	SW846 7471A	SW846 7471A
N-Hexane Ext. Material, Silica Gel Treated-1664A	CFR136A 1664A S	CFR136A 1664A S
N-Hexane Extractable Material (1664A)	CFR136A 1664A H	
Percent Moisture	MCAWW 160.3 MOD	MCAWW 160.3 MOD
PCBs by SW-846 8082	SW846 8082	SW846 3550B/366
Semivolatile Organic Compounds by GC/MS	SW846 8270C	SW846 3550B
Volatile Organics by GC/MS	SW846 8260B	SW846 5030B
Volatile Petroleum Hydrocarbons	SW846 8015 MOD	SW846 5030

References:

CFR136A "Methods for Organic Chemical Analysis of Municipal and Industrial Wastewater", 40CFR, Part 136, Appendix A, October 26, 1984 and subsequent revisions.

MCAWW "Methods for Chemical Analysis of Water and Wastes", EPA-600/4-79-020, March 1983 and subsequent revisions.

SW846 "Test Methods for Evaluating Solid Waste, Physical/Chemical Methods", Third Edition, November 1986 and its updates.

SAMPLE SUMMARY

F1D010496

WO #	SAMPLE#	CLIENT SAMPLE ID	SAMPLED DATE	SAMP TIME
MGGMG	001	04-PE-IR04/72-001	03/31/11	10:40
MGGMV	002	04-PE-IR04/72-002	03/31/11	10:50
MGGM0	003	04-PE-IR04/72-003	03/31/11	11:00
MGGM1	004	04-PE-IR04/72-004	03/31/11	11:10
MGGM2	005	04-PE-IR04/72-005	03/31/11	11:15
MGGM4	006	04-PC-IR57-001	03/31/11	11:25
MGGNK	007	04-PC-IR57-002	03/31/11	11:30
MGGNL	008	04-PC-IR57-003	03/31/11	11:35
MGGNN	009	04-PC-IR57-004	03/31/11	11:40
MGGNP	010	04-PC-IR57-005	03/31/11	11:50

NOTE(S):

- The analytical results of the samples listed above are presented on the following pages.
- All calculations are performed before rounding to avoid round-off errors in calculated results.
- Results noted as "ND" were not detected at or above the stated limit.
- This report must not be reproduced, except in full, without the written approval of the laboratory.
- Results for the following parameters are never reported on a dry weight basis: color, corrosivity, density, flashpoint, ignitability, layers, odor, paint filter test, pH, porosity pressure, reactivity, redox potential, specific gravity, spot tests, solids, solubility, temperature, viscosity, and weight.

Tetra Tech EC, Inc.

Client Sample ID: 04-PE-IR04/72-001

GC/MS Volatiles

Lot-Sample #...: F1D010496-001 **Work Order #...:** MGGMG1AE **Matrix.....:** SOLID
Date Sampled...: 03/31/11 10:40 **Date Received..:** 04/01/11
Prep Date.....: 04/07/11 **Analysis Date..:** 04/07/11
Prep Batch #...: 1097312 **Analysis Time..:** 15:46
Dilution Factor: 1
% Moisture.....: 4.5 **Method.....:** SW846 8260B

PARAMETER	RESULT	REPORTING LIMIT	UNITS	MDL
Xylenes (total)	ND	10.5	ug/kg	0.894
Acetone	ND	20.9	ug/kg	6.78
Benzene	ND	5.24	ug/kg	0.265
Bromodichloromethane	ND	5.24	ug/kg	0.266
Bromoform	ND	5.24	ug/kg	0.383
Bromomethane	ND	10.5	ug/kg	1.01
2-Butanone (MEK)	ND	20.9	ug/kg	1.54
Carbon tetrachloride	ND	5.24	ug/kg	0.537
Chlorobenzene	ND	5.24	ug/kg	0.400
Dibromochloromethane	ND	5.24	ug/kg	0.345
Chloroethane	ND	10.5	ug/kg	0.540
Chloroform	ND	5.24	ug/kg	0.394
Chloromethane	ND	10.5	ug/kg	0.579
1,1-Dichloroethane	ND	5.24	ug/kg	0.411
1,2-Dichloroethane	ND	5.24	ug/kg	0.908
1,1-Dichloroethene	ND	5.24	ug/kg	1.69
cis-1,2-Dichloroethene	ND	5.24	ug/kg	0.625
trans-1,2-Dichloroethene	ND	5.24	ug/kg	0.539
1,2-Dichloropropane	ND	5.24	ug/kg	0.401
cis-1,3-Dichloropropene	ND	5.24	ug/kg	0.623
trans-1,3-Dichloropropene	ND	5.24	ug/kg	0.365
Ethylbenzene	ND	5.24	ug/kg	0.313
2-Hexanone	ND	20.9	ug/kg	0.468
Methylene chloride	ND	5.24	ug/kg	1.65
4-Methyl-2-pentanone	ND	20.9	ug/kg	0.767
Methyl tert-butyl ether (MTBE)	ND	10.5	ug/kg	0.498
Styrene	ND	5.24	ug/kg	0.363
1,1,2,2-Tetrachloroethane	ND	5.24	ug/kg	0.420
Tetrachloroethene	ND	5.24	ug/kg	0.293
Toluene	ND	5.24	ug/kg	0.628
1,1,1-Trichloroethane	ND	5.24	ug/kg	0.451
1,1,2-Trichloroethane	ND	5.24	ug/kg	0.600
Trichloroethene	**18.8**	**5.24**	**ug/kg**	**0.403**
Vinyl chloride	ND	5.24	ug/kg	0.448

(Continued on next page)

Tetra Tech EC, Inc.

Client Sample ID: 04-PE-IR04/72-001

GC/MS Volatiles

Lot-Sample #...: F1D010496-001 **Work Order #...:** MGGMG1AE **Matrix.....:** SOLID

SURROGATE	PERCENT RECOVERY	RECOVERY LIMITS
Toluene-d8	110	(85.- 115)
Dibromofluoromethane	98.7	(76.- 126)
1,2-Dichloroethane-d4	105	(71.- 128)
4-Bromofluorobenzene	118	(85.- 120)

NOTE(S):

Results and reporting limits have been adjusted for dry weight.

Tetra Tech EC, Inc.

Client Sample ID: 04-PE-IR04/72-002

GC/MS Volatiles

Lot-Sample #...: F1D010496-002 **Work Order #...:** MGGMV1AK **Matrix.....:** SOLID
Date Sampled...: 03/31/11 10:50 **Date Received..:** 04/01/11
Prep Date.....: 04/07/11 **Analysis Date..:** 04/07/11
Prep Batch #...: 1097312 **Analysis Time..:** 16:12
Dilution Factor: 1
% Moisture.....: 15 **Method.....:** SW846 8260B

PARAMETER	RESULT	REPORTING LIMIT	UNITS	MDL
Xylenes (total)	ND	11.8	ug/kg	1.00
Acetone	ND	23.5	ug/kg	7.60
Benzene	ND	5.88	ug/kg	0.297
Bromodichloromethane	ND	5.88	ug/kg	0.299
Bromoform	ND	5.88	ug/kg	0.430
Bromomethane	ND	11.8	ug/kg	1.13
2-Butanone (MEK)	ND	23.5	ug/kg	1.73
Carbon tetrachloride	ND	5.88	ug/kg	0.603
Chlorobenzene	ND	5.88	ug/kg	0.449
Dibromochloromethane	ND	5.88	ug/kg	0.387
Chloroethane	ND	11.8	ug/kg	0.606
Chloroform	ND	5.88	ug/kg	0.442
Chloromethane	ND	11.8	ug/kg	0.650
1,1-Dichloroethane	ND	5.88	ug/kg	0.461
1,2-Dichloroethane	ND	5.88	ug/kg	1.02
1,1-Dichloroethene	ND	5.88	ug/kg	1.89
cis-1,2-Dichloroethene	ND	5.88	ug/kg	0.702
trans-1,2-Dichloroethene	ND	5.88	ug/kg	0.605
1,2-Dichloropropane	ND	5.88	ug/kg	0.450
cis-1,3-Dichloropropene	ND	5.88	ug/kg	0.699
trans-1,3-Dichloropropene	ND	5.88	ug/kg	0.410
Ethylbenzene	ND	5.88	ug/kg	0.351
2-Hexanone	ND	23.5	ug/kg	0.525
Methylene chloride	ND	5.88	ug/kg	1.86
4-Methyl-2-pentanone	ND	23.5	ug/kg	0.860
Methyl tert-butyl ether (MTBE)	ND	11.8	ug/kg	0.559
Styrene	ND	5.88	ug/kg	0.408
1,1,2,2-Tetrachloroethane	ND	5.88	ug/kg	0.471
Tetrachloroethene	ND	5.88	ug/kg	0.329
Toluene	ND	5.88	ug/kg	0.705
1,1,1-Trichloroethane	ND	5.88	ug/kg	0.507
1,1,2-Trichloroethane	ND	5.88	ug/kg	0.673
Trichloroethene	ND	5.88	ug/kg	0.452
Vinyl chloride	ND	5.88	ug/kg	0.503

(Continued on next page)

Tetra Tech EC, Inc.

Client Sample ID: 04-PE-IR04/72-002

GC/MS Volatiles

Lot-Sample #...: F1D010496-002 Work Order #...: MGGMV1AK Matrix.....: SOLID

SURROGATE	PERCENT RECOVERY	RECOVERY LIMITS
Toluene-d8	115	(85.- 115)
Dibromofluoromethane	94.6	(76.- 126)
1,2-Dichloroethane-d4	98.5	(71.- 128)
4-Bromofluorobenzene	128 *	(85.- 120)

NOTE(S):

* Surrogate recovery is outside stated control limits.

Results and reporting limits have been adjusted for dry weight.

Tetra Tech EC, Inc.

Client Sample ID: 04-PE-IR04/72-003

GC/MS Volatiles

Lot-Sample #...: F1D010496-003 **Work Order #...:** MGGM01AK **Matrix.....:** SOLID
Date Sampled...: 03/31/11 11:00 **Date Received..:** 04/01/11
Prep Date.....: 04/07/11 **Analysis Date..:** 04/07/11
Prep Batch #...: 1097312 **Analysis Time..:** 16:38
Dilution Factor: 1
% Moisture.....: 12 **Method.....:** SW846 8260B

PARAMETER	RESULT	REPORTING LIMIT	UNITS	MDL
Xylenes (total)	ND	11.4	ug/kg	0.975
Acetone	ND	22.8	ug/kg	7.39
Benzene	**2.19 J**	**5.71**	**ug/kg**	**0.289**
Bromodichloromethane	ND	5.71	ug/kg	0.290
Bromoform	ND	5.71	ug/kg	0.418
Bromomethane	ND	11.4	ug/kg	1.10
2-Butanone (MEK)	ND	22.8	ug/kg	1.68
Carbon tetrachloride	ND	5.71	ug/kg	0.586
Chlorobenzene	ND	5.71	ug/kg	0.436
Dibromochloromethane	ND	5.71	ug/kg	0.376
Chloroethane	ND	11.4	ug/kg	0.589
Chloroform	ND	5.71	ug/kg	0.429
Chloromethane	ND	11.4	ug/kg	0.632
1,1-Dichloroethane	ND	5.71	ug/kg	0.448
1,2-Dichloroethane	ND	5.71	ug/kg	0.990
1,1-Dichloroethene	ND	5.71	ug/kg	1.84
cis-1,2-Dichloroethene	ND	5.71	ug/kg	0.682
trans-1,2-Dichloroethene	ND	5.71	ug/kg	0.588
1,2-Dichloropropane	ND	5.71	ug/kg	0.437
cis-1,3-Dichloropropene	ND	5.71	ug/kg	0.680
trans-1,3-Dichloropropene	ND	5.71	ug/kg	0.399
Ethylbenzene	ND	5.71	ug/kg	0.341
2-Hexanone	ND	22.8	ug/kg	0.511
Methylene chloride	ND	5.71	ug/kg	1.80
4-Methyl-2-pentanone	ND	22.8	ug/kg	0.836
Methyl tert-butyl ether (MTBE)	ND	11.4	ug/kg	0.544
Styrene	ND	5.71	ug/kg	0.396
1,1,2,2-Tetrachloroethane	ND	5.71	ug/kg	0.458
Tetrachloroethene	ND	5.71	ug/kg	0.320
Toluene	ND	5.71	ug/kg	0.685
1,1,1-Trichloroethane	ND	5.71	ug/kg	0.492
1,1,2-Trichloroethane	ND	5.71	ug/kg	0.654
Trichloroethene	**2.50 J**	**5.71**	**ug/kg**	**0.440**
Vinyl chloride	ND	5.71	ug/kg	0.489

(Continued on next page)

Tetra Tech EC, Inc.

Client Sample ID: 04-PE-IR04/72-003

GC/MS Volatiles

Lot-Sample #...: F1D010496-003 **Work Order #...:** MGGM01AK **Matrix.....:** SOLID

SURROGATE	PERCENT RECOVERY	RECOVERY LIMITS
Toluene-d8	130 *	(85.- 115)
Dibromofluoromethane	99.1	(76.- 126)
1,2-Dichloroethane-d4	97.2	(71.- 128)
4-Bromofluorobenzene	128 *	(85.- 120)

NOTE(S):

* Surrogate recovery is outside stated control limits.

Results and reporting limits have been adjusted for dry weight.

J Estimated result. Result is less than RL.

Tetra Tech EC, Inc.

Client Sample ID: 04-PE-IR04/72-004

GC/MS Volatiles

Lot-Sample #...: F1D010496-004 **Work Order #...:** MGGM11AK **Matrix.....:** SOLID
Date Sampled...: 03/31/11 11:10 **Date Received..:** 04/01/11
Prep Date.....: 04/07/11 **Analysis Date..:** 04/07/11
Prep Batch #...: 1097312 **Analysis Time..:** 17:03
Dilution Factor: 1
% Moisture.....: 17 **Method.....:** SW846 8260B

PARAMETER	RESULT	REPORTING LIMIT	UNITS	MDL
Xylenes (total)	ND	12.0	ug/kg	1.02
Acetone	ND	24.0	ug/kg	7.75
Benzene	**3.87 J**	**5.99**	**ug/kg**	**0.303**
Bromodichloromethane	ND	5.99	ug/kg	0.304
Bromoform	ND	5.99	ug/kg	0.439
Bromomethane	ND	12.0	ug/kg	1.15
2-Butanone (MEK)	ND	24.0	ug/kg	1.76
Carbon tetrachloride	ND	5.99	ug/kg	0.615
Chlorobenzene	ND	5.99	ug/kg	0.458
Dibromochloromethane	ND	5.99	ug/kg	0.394
Chloroethane	ND	12.0	ug/kg	0.618
Chloroform	**2.02 J**	**5.99**	**ug/kg**	**0.451**
Chloromethane	ND	12.0	ug/kg	0.663
1,1-Dichloroethane	ND	5.99	ug/kg	0.470
1,2-Dichloroethane	ND	5.99	ug/kg	1.04
1,1-Dichloroethene	ND	5.99	ug/kg	1.93
cis-1,2-Dichloroethene	**21.1**	**5.99**	**ug/kg**	**0.715**
trans-1,2-Dichloroethene	**0.655 J**	**5.99**	**ug/kg**	**0.617**
1,2-Dichloropropane	ND	5.99	ug/kg	0.459
cis-1,3-Dichloropropene	ND	5.99	ug/kg	0.713
trans-1,3-Dichloropropene	ND	5.99	ug/kg	0.418
Ethylbenzene	ND	5.99	ug/kg	0.358
2-Hexanone	ND	24.0	ug/kg	0.536
Methylene chloride	ND	5.99	ug/kg	1.89
4-Methyl-2-pentanone	ND	24.0	ug/kg	0.877
Methyl tert-butyl ether (MTBE)	ND	12.0	ug/kg	0.570
Styrene	ND	5.99	ug/kg	0.416
1,1,2,2-Tetrachloroethane	ND	5.99	ug/kg	0.480
Tetrachloroethene	ND	5.99	ug/kg	0.335
Toluene	ND	5.99	ug/kg	0.719
1,1,1-Trichloroethane	ND	5.99	ug/kg	0.516
1,1,2-Trichloroethane	ND	5.99	ug/kg	0.687
Trichloroethene	**29.6**	**5.99**	**ug/kg**	**0.461**
Vinyl chloride	ND	5.99	ug/kg	0.513

(Continued on next page)

Tetra Tech EC, Inc.

Client Sample ID: 04-PE-IR04/72-004

GC/MS Volatiles

Lot-Sample #...: F1D010496-004 Work Order #...: MGGM11AK Matrix.....: SOLID

SURROGATE	PERCENT RECOVERY	RECOVERY LIMITS
Toluene-d8	134 *	(85.- 115)
Dibromofluoromethane	101	(76.- 126)
1,2-Dichloroethane-d4	97.3	(71.- 128)
4-Bromofluorobenzene	138 *	(85.- 120)

NOTE(S):

* Surrogate recovery is outside stated control limits.

Results and reporting limits have been adjusted for dry weight.

J Estimated result. Result is less than RL.

Tetra Tech EC, Inc.

Client Sample ID: 04-PE-IR04/72-005

GC/MS Volatiles

Lot-Sample #...: F1D010496-005 **Work Order #...:** MGGM21AK **Matrix.....:** SOLID
Date Sampled...: 03/31/11 11:15 **Date Received..:** 04/01/11
Prep Date.....: 04/07/11 **Analysis Date..:** 04/07/11
Prep Batch #...: 1097312 **Analysis Time..:** 17:29
Dilution Factor: 1
% Moisture.....: 4.0 **Method.....:** SW846 8260B

PARAMETER	RESULT	REPORTING LIMIT	UNITS	MDL
Xylenes (total)	ND	10.4	ug/kg	0.890
Acetone	**9.29 J**	**20.8**	**ug/kg**	**6.74**
Benzene	ND	5.21	ug/kg	0.264
Bromodichloromethane	ND	5.21	ug/kg	0.265
Bromoform	ND	5.21	ug/kg	0.381
Bromomethane	ND	10.4	ug/kg	1.00
2-Butanone (MEK)	ND	20.8	ug/kg	1.53
Carbon tetrachloride	ND	5.21	ug/kg	0.534
Chlorobenzene	ND	5.21	ug/kg	0.398
Dibromochloromethane	ND	5.21	ug/kg	0.343
Chloroethane	ND	10.4	ug/kg	0.538
Chloroform	ND	5.21	ug/kg	0.392
Chloromethane	ND	10.4	ug/kg	0.576
1,1-Dichloroethane	ND	5.21	ug/kg	0.408
1,2-Dichloroethane	ND	5.21	ug/kg	0.903
1,1-Dichloroethene	ND	5.21	ug/kg	1.68
cis-1,2-Dichloroethene	ND	5.21	ug/kg	0.622
trans-1,2-Dichloroethene	ND	5.21	ug/kg	0.537
1,2-Dichloropropane	ND	5.21	ug/kg	0.399
cis-1,3-Dichloropropene	ND	5.21	ug/kg	0.620
trans-1,3-Dichloropropene	ND	5.21	ug/kg	0.364
Ethylbenzene	ND	5.21	ug/kg	0.311
2-Hexanone	ND	20.8	ug/kg	0.466
Methylene chloride	ND	5.21	ug/kg	1.65
4-Methyl-2-pentanone	ND	20.8	ug/kg	0.763
Methyl tert-butyl ether (MTBE)	ND	10.4	ug/kg	0.496
Styrene	ND	5.21	ug/kg	0.361
1,1,2,2-Tetrachloroethane	ND	5.21	ug/kg	0.418
Tetrachloroethene	ND	5.21	ug/kg	0.292
Toluene	ND	5.21	ug/kg	0.625
1,1,1-Trichloroethane	ND	5.21	ug/kg	0.449
1,1,2-Trichloroethane	ND	5.21	ug/kg	0.597
Trichloroethene	ND	5.21	ug/kg	0.401
Vinyl chloride	ND	5.21	ug/kg	0.446

(Continued on next page)

Tetra Tech EC, Inc.

Client Sample ID: 04-PE-IR04/72-005

GC/MS Volatiles

Lot-Sample #...: F1D010496-005 **Work Order #...:** MGGM21AK **Matrix.....:** SOLID

SURROGATE	PERCENT RECOVERY	RECOVERY LIMITS
Toluene-d8	125 *	(85.- 115)
Dibromofluoromethane	99.5	(76.- 126)
1,2-Dichloroethane-d4	108	(71.- 128)
4-Bromofluorobenzene	167 *	(85.- 120)

NOTE(S):

* Surrogate recovery is outside stated control limits.

Results and reporting limits have been adjusted for dry weight.

J Estimated result. Result is less than RL.

Tetra Tech EC, Inc.

Client Sample ID: 04-PC-IR57-001

GC/MS Volatiles

Lot-Sample #...: F1D010496-006 **Work Order #...:** MGGM41AE **Matrix.....:** SOLID
Date Sampled...: 03/31/11 11:25 **Date Received..:** 04/01/11
Prep Date.....: 04/07/11 **Analysis Date..:** 04/07/11
Prep Batch #...: 1097312 **Analysis Time..:** 17:54
Dilution Factor: 1
% Moisture.....: 7.5 **Method.....:** SW846 8260B

PARAMETER	RESULT	REPORTING LIMIT	UNITS	MDL
Xylenes (total)	ND	10.8	ug/kg	0.923
Acetone	ND	21.6	ug/kg	6.99
Benzene	ND	5.40	ug/kg	0.273
Bromodichloromethane	ND	5.40	ug/kg	0.275
Bromoform	ND	5.40	ug/kg	0.396
Bromomethane	ND	10.8	ug/kg	1.04
2-Butanone (MEK)	ND	21.6	ug/kg	1.59
Carbon tetrachloride	ND	5.40	ug/kg	0.554
Chlorobenzene	ND	5.40	ug/kg	0.413
Dibromochloromethane	ND	5.40	ug/kg	0.356
Chloroethane	ND	10.8	ug/kg	0.558
Chloroform	ND	5.40	ug/kg	0.406
Chloromethane	ND	10.8	ug/kg	0.598
1,1-Dichloroethane	ND	5.40	ug/kg	0.424
1,2-Dichloroethane	ND	5.40	ug/kg	0.937
1,1-Dichloroethene	ND	5.40	ug/kg	1.74
cis-1,2-Dichloroethene	ND	5.40	ug/kg	0.645
trans-1,2-Dichloroethene	ND	5.40	ug/kg	0.557
1,2-Dichloropropane	ND	5.40	ug/kg	0.414
cis-1,3-Dichloropropene	ND	5.40	ug/kg	0.643
trans-1,3-Dichloropropene	ND	5.40	ug/kg	0.377
Ethylbenzene	ND	5.40	ug/kg	0.323
2-Hexanone	ND	21.6	ug/kg	0.483
Methylene chloride	ND	5.40	ug/kg	1.71
4-Methyl-2-pentanone	ND	21.6	ug/kg	0.791
Methyl tert-butyl ether (MTBE)	ND	10.8	ug/kg	0.514
Styrene	ND	5.40	ug/kg	0.375
1,1,2,2-Tetrachloroethane	ND	5.40	ug/kg	0.433
Tetrachloroethene	ND	5.40	ug/kg	0.303
Toluene	ND	5.40	ug/kg	0.648
1,1,1-Trichloroethane	ND	5.40	ug/kg	0.466
1,1,2-Trichloroethane	ND	5.40	ug/kg	0.619
Trichloroethene	ND	5.40	ug/kg	0.416
Vinyl chloride	ND	5.40	ug/kg	0.463

(Continued on next page)

Tetra Tech EC, Inc.

Client Sample ID: 04-PC-IR57-001

GC/MS Volatiles

Lot-Sample #...: F1D010496-006 **Work Order #...:** MGGM41AE **Matrix.....:** SOLID

SURROGATE	PERCENT RECOVERY	RECOVERY LIMITS
Toluene-d8	108	(85.- 115)
Dibromofluoromethane	95.2	(76.- 126)
1,2-Dichloroethane-d4	104	(71.- 128)
4-Bromofluorobenzene	134 *	(85.- 120)

NOTE(S):

* Surrogate recovery is outside stated control limits.

Results and reporting limits have been adjusted for dry weight.

Tetra Tech EC, Inc.

Client Sample ID: 04-PC-IR57-002

GC/MS Volatiles

Lot-Sample #...: F1D010496-007 **Work Order #...:** MGGNK1AJ **Matrix.....:** SOLID
Date Sampled...: 03/31/11 11:30 **Date Received..:** 04/01/11
Prep Date.....: 04/07/11 **Analysis Date..:** 04/07/11
Prep Batch #...: 1097312 **Analysis Time..:** 18:20
Dilution Factor: 1
% Moisture.....: 13 **Method.....:** SW846 8260B

PARAMETER	RESULT	REPORTING LIMIT	UNITS	MDL
Xylenes (total)	ND	11.5	ug/kg	0.982
Acetone	ND	23.0	ug/kg	7.44
Benzene	ND	5.75	ug/kg	0.291
Bromodichloromethane	ND	5.75	ug/kg	0.292
Bromoform	ND	5.75	ug/kg	0.421
Bromomethane	ND	11.5	ug/kg	1.10
2-Butanone (MEK)	ND	23.0	ug/kg	1.69
Carbon tetrachloride	ND	5.75	ug/kg	0.590
Chlorobenzene	ND	5.75	ug/kg	0.439
Dibromochloromethane	ND	5.75	ug/kg	0.378
Chloroethane	ND	11.5	ug/kg	0.593
Chloroform	ND	5.75	ug/kg	0.432
Chloromethane	ND	11.5	ug/kg	0.636
1,1-Dichloroethane	ND	5.75	ug/kg	0.451
1,2-Dichloroethane	ND	5.75	ug/kg	0.997
1,1-Dichloroethene	ND	5.75	ug/kg	1.85
cis-1,2-Dichloroethene	ND	5.75	ug/kg	0.687
trans-1,2-Dichloroethene	ND	5.75	ug/kg	0.592
1,2-Dichloropropane	ND	5.75	ug/kg	0.440
cis-1,3-Dichloropropene	ND	5.75	ug/kg	0.684
trans-1,3-Dichloropropene	ND	5.75	ug/kg	0.401
Ethylbenzene	ND	5.75	ug/kg	0.344
2-Hexanone	ND	23.0	ug/kg	0.514
Methylene chloride	ND	5.75	ug/kg	1.82
4-Methyl-2-pentanone	ND	23.0	ug/kg	0.842
Methyl tert-butyl ether (MTBE)	ND	11.5	ug/kg	0.547
Styrene	ND	5.75	ug/kg	0.399
1,1,2,2-Tetrachloroethane	ND	5.75	ug/kg	0.461
Tetrachloroethene	ND	5.75	ug/kg	0.322
Toluene	ND	5.75	ug/kg	0.690
1,1,1-Trichloroethane	ND	5.75	ug/kg	0.496
1,1,2-Trichloroethane	ND	5.75	ug/kg	0.659
Trichloroethene	ND	5.75	ug/kg	0.443
Vinyl chloride	ND	5.75	ug/kg	0.492

(Continued on next page)

Tetra Tech EC, Inc.

Client Sample ID: 04-PC-IR57-002

GC/MS Volatiles

Lot-Sample #...: F1D010496-007 **Work Order #...:** MGGNK1AJ **Matrix.....:** SOLID

SURROGATE	PERCENT RECOVERY	RECOVERY LIMITS
Toluene-d8	108	(85.- 115)
Dibromofluoromethane	92.3	(76.- 126)
1,2-Dichloroethane-d4	103	(71.- 128)
4-Bromofluorobenzene	118	(85.- 120)

NOTE(S):

Results and reporting limits have been adjusted for dry weight.

Tetra Tech EC, Inc.

Client Sample ID: 04-PC-IR57-003

GC/MS Volatiles

Lot-Sample #...: F1D010496-008 **Work Order #...:** MGGNL1AN **Matrix.....:** SOLID
Date Sampled...: 03/31/11 11:35 **Date Received..:** 04/01/11
Prep Date.....: 04/11/11 **Analysis Date..:** 04/11/11
Prep Batch #...: 1101275 **Analysis Time..:** 12:30
Dilution Factor: 1
% Moisture.....: 5.9 **Method.....:** SW846 8260B

PARAMETER	RESULT	REPORTING LIMIT	UNITS	MDL
Xylenes (total)	ND	10.6	ug/kg	0.907
Acetone	ND	21.2	ug/kg	6.87
Benzene	ND	5.31	ug/kg	0.269
Bromodichloromethane	ND	5.31	ug/kg	0.270
Bromoform	ND	5.31	ug/kg	0.389
Bromomethane	ND	10.6	ug/kg	1.02
2-Butanone (MEK)	ND	21.2	ug/kg	1.56
Carbon tetrachloride	ND	5.31	ug/kg	0.545
Chlorobenzene	ND	5.31	ug/kg	0.406
Dibromochloromethane	ND	5.31	ug/kg	0.349
Chloroethane	ND	10.6	ug/kg	0.548
Chloroform	ND	5.31	ug/kg	0.399
Chloromethane	ND	10.6	ug/kg	0.587
1,1-Dichloroethane	ND	5.31	ug/kg	0.416
1,2-Dichloroethane	ND	5.31	ug/kg	0.921
1,1-Dichloroethene	ND	5.31	ug/kg	1.71
cis-1,2-Dichloroethene	ND	5.31	ug/kg	0.634
trans-1,2-Dichloroethene	ND	5.31	ug/kg	0.547
1,2-Dichloropropane	ND	5.31	ug/kg	0.407
cis-1,3-Dichloropropene	ND	5.31	ug/kg	0.632
trans-1,3-Dichloropropene	ND	5.31	ug/kg	0.371
Ethylbenzene	ND	5.31	ug/kg	0.318
2-Hexanone	ND	21.2	ug/kg	0.475
Methylene chloride	**2.36 J**	**5.31**	**ug/kg**	**1.68**
4-Methyl-2-pentanone	ND	21.2	ug/kg	0.778
Methyl tert-butyl ether (MTBE)	ND	10.6	ug/kg	0.506
Styrene	ND	5.31	ug/kg	0.369
1,1,2,2-Tetrachloroethane	ND	5.31	ug/kg	0.426
Tetrachloroethene	ND	5.31	ug/kg	0.297
Toluene	ND	5.31	ug/kg	0.637
1,1,1-Trichloroethane	ND	5.31	ug/kg	0.458
1,1,2-Trichloroethane	ND	5.31	ug/kg	0.609
Trichloroethene	ND	5.31	ug/kg	0.409
Vinyl chloride	ND	5.31	ug/kg	0.455

(Continued on next page)

Tetra Tech EC, Inc.

Client Sample ID: 04-PC-IR57-003

GC/MS Volatiles

Lot-Sample #...: F1D010496-008 **Work Order #...:** MGGNL1AN **Matrix.....:** SOLID

SURROGATE	PERCENT RECOVERY	RECOVERY LIMITS
Toluene-d8	118 *	(85.- 115)
Dibromofluoromethane	90.3	(76.- 126)
1,2-Dichloroethane-d4	82.6	(71.- 128)
4-Bromofluorobenzene	127 *	(85.- 120)

NOTE(S):

* Surrogate recovery is outside stated control limits.

Results and reporting limits have been adjusted for dry weight.

J Estimated result. Result is less than RL.

Tetra Tech EC, Inc.

Client Sample ID: 04-PC-IR57-004

GC/MS Volatiles

Lot-Sample #...: F1D010496-009 **Work Order #...:** MGGNN1AT **Matrix.....:** SOLID
Date Sampled...: 03/31/11 11:40 **Date Received..:** 04/01/11
Prep Date.....: 04/11/11 **Analysis Date..:** 04/11/11
Prep Batch #...: 1101275 **Analysis Time..:** 12:56
Dilution Factor: 1
% Moisture.....: 6.1 **Method.....:** SW846 8260B

PARAMETER	RESULT	REPORTING LIMIT	UNITS	MDL
Xylenes (total)	ND	10.7	ug/kg	0.910
Acetone	ND	21.3	ug/kg	6.89
Benzene	ND	5.33	ug/kg	0.269
Bromodichloromethane	ND	5.33	ug/kg	0.271
Bromoform	ND	5.33	ug/kg	0.390
Bromomethane	ND	10.7	ug/kg	1.02
2-Butanone (MEK)	ND	21.3	ug/kg	1.57
Carbon tetrachloride	ND	5.33	ug/kg	0.546
Chlorobenzene	ND	5.33	ug/kg	0.407
Dibromochloromethane	ND	5.33	ug/kg	0.350
Chloroethane	ND	10.7	ug/kg	0.550
Chloroform	ND	5.33	ug/kg	0.401
Chloromethane	ND	10.7	ug/kg	0.589
1,1-Dichloroethane	ND	5.33	ug/kg	0.418
1,2-Dichloroethane	ND	5.33	ug/kg	0.924
1,1-Dichloroethene	ND	5.33	ug/kg	1.71
cis-1,2-Dichloroethene	ND	5.33	ug/kg	0.636
trans-1,2-Dichloroethene	ND	5.33	ug/kg	0.549
1,2-Dichloropropane	ND	5.33	ug/kg	0.408
cis-1,3-Dichloropropene	ND	5.33	ug/kg	0.634
trans-1,3-Dichloropropene	ND	5.33	ug/kg	0.372
Ethylbenzene	ND	5.33	ug/kg	0.318
2-Hexanone	ND	21.3	ug/kg	0.476
Methylene chloride	**1.92 J**	**5.33**	**ug/kg**	**1.68**
4-Methyl-2-pentanone	ND	21.3	ug/kg	0.780
Methyl tert-butyl ether (MTBE)	ND	10.7	ug/kg	0.507
Styrene	ND	5.33	ug/kg	0.370
1,1,2,2-Tetrachloroethane	ND	5.33	ug/kg	0.427
Tetrachloroethene	ND	5.33	ug/kg	0.298
Toluene	ND	5.33	ug/kg	0.639
1,1,1-Trichloroethane	ND	5.33	ug/kg	0.459
1,1,2-Trichloroethane	ND	5.33	ug/kg	0.610
Trichloroethene	ND	5.33	ug/kg	0.410
Vinyl chloride	ND	5.33	ug/kg	0.456

(Continued on next page)

Tetra Tech EC, Inc.

Client Sample ID: 04-PC-IR57-004

GC/MS Volatiles

Lot-Sample #...: F1D010496-009 **Work Order #...:** MGGNN1AT **Matrix.....:** SOLID

SURROGATE	PERCENT RECOVERY	RECOVERY LIMITS
Toluene-d8	112	(85.- 115)
Dibromofluoromethane	90.4	(76.- 126)
1,2-Dichloroethane-d4	81.4	(71.- 128)
4-Bromofluorobenzene	114	(85.- 120)

NOTE(S):

Results and reporting limits have been adjusted for dry weight.

J Estimated result. Result is less than RL.

Tetra Tech EC, Inc.

Client Sample ID: 04-PC-IR57-005

GC/MS Volatiles

Lot-Sample #...: F1D010496-010 **Work Order #...:** MGGNP1AT **Matrix.....:** SOLID
Date Sampled...: 03/31/11 11:50 **Date Received..:** 04/01/11
Prep Date.....: 04/11/11 **Analysis Date..:** 04/11/11
Prep Batch #...: 1101275 **Analysis Time..:** 13:21
Dilution Factor: 1
% Moisture.....: 16 **Method.....:** SW846 8260B

PARAMETER	RESULT	REPORTING LIMIT	UNITS	MDL
Xylenes (total)	ND	11.9	ug/kg	1.01
Acetone	ND	23.7	ug/kg	7.67
Benzene	ND	5.93	ug/kg	0.300
Bromodichloromethane	ND	5.93	ug/kg	0.301
Bromoform	ND	5.93	ug/kg	0.434
Bromomethane	ND	11.9	ug/kg	1.14
2-Butanone (MEK)	ND	23.7	ug/kg	1.74
Carbon tetrachloride	ND	5.93	ug/kg	0.608
Chlorobenzene	ND	5.93	ug/kg	0.453
Dibromochloromethane	ND	5.93	ug/kg	0.390
Chloroethane	ND	11.9	ug/kg	0.612
Chloroform	ND	5.93	ug/kg	0.446
Chloromethane	ND	11.9	ug/kg	0.656
1,1-Dichloroethane	ND	5.93	ug/kg	0.465
1,2-Dichloroethane	ND	5.93	ug/kg	1.03
1,1-Dichloroethene	ND	5.93	ug/kg	1.91
cis-1,2-Dichloroethene	ND	5.93	ug/kg	0.708
trans-1,2-Dichloroethene	ND	5.93	ug/kg	0.611
1,2-Dichloropropane	ND	5.93	ug/kg	0.454
cis-1,3-Dichloropropene	ND	5.93	ug/kg	0.706
trans-1,3-Dichloropropene	ND	5.93	ug/kg	0.414
Ethylbenzene	ND	5.93	ug/kg	0.355
2-Hexanone	ND	23.7	ug/kg	0.530
Methylene chloride	**1.92 J**	**5.93**	**ug/kg**	**1.87**
4-Methyl-2-pentanone	ND	23.7	ug/kg	0.868
Methyl tert-butyl ether (MTBE)	ND	11.9	ug/kg	0.565
Styrene	ND	5.93	ug/kg	0.412
1,1,2,2-Tetrachloroethane	ND	5.93	ug/kg	0.476
Tetrachloroethene	ND	5.93	ug/kg	0.332
Toluene	ND	5.93	ug/kg	0.712
1,1,1-Trichloroethane	ND	5.93	ug/kg	0.511
1,1,2-Trichloroethane	ND	5.93	ug/kg	0.680
Trichloroethene	ND	5.93	ug/kg	0.457
Vinyl chloride	ND	5.93	ug/kg	0.508

(Continued on next page)

Tetra Tech EC, Inc.

Client Sample ID: 04-PC-IR57-005

GC/MS Volatiles

Lot-Sample #...: F1D010496-010 Work Order #...: MGGNP1AT Matrix.....: SOLID

SURROGATE	PERCENT RECOVERY	RECOVERY LIMITS
Toluene-d8	112	(85.- 115)
Dibromofluoromethane	99.4	(76.- 126)
1,2-Dichloroethane-d4	91.2	(71.- 128)
4-Bromofluorobenzene	113	(85.- 120)

NOTE(S):

Results and reporting limits have been adjusted for dry weight.

J Estimated result. Result is less than RL.

METHOD BLANK REPORT

GC/MS Volatiles

Client Lot #...: F1D010496 **Work Order #...:** MGTVG1AA **Matrix.....:** SOLID
MB Lot-Sample #: F1D070000-312

Prep Date.....: 04/07/11 **Analysis Time..:** 15:21
Analysis Date..: 04/07/11 **Prep Batch #...:** 1097312
Dilution Factor: 1

PARAMETER	RESULT	REPORTING LIMIT	UNITS	METHOD
Xylenes (total)	ND	10.0	ug/kg	SW846 8260B
Acetone	ND	20.0	ug/kg	SW846 8260B
Benzene	ND	5.00	ug/kg	SW846 8260B
Bromodichloromethane	ND	5.00	ug/kg	SW846 8260B
Bromoform	ND	5.00	ug/kg	SW846 8260B
Bromomethane	ND	10.0	ug/kg	SW846 8260B
2-Butanone (MEK)	ND	20.0	ug/kg	SW846 8260B
Carbon tetrachloride	ND	5.00	ug/kg	SW846 8260B
Chlorobenzene	ND	5.00	ug/kg	SW846 8260B
Dibromochloromethane	ND	5.00	ug/kg	SW846 8260B
Chloroethane	ND	10.0	ug/kg	SW846 8260B
Chloroform	ND	5.00	ug/kg	SW846 8260B
Chloromethane	ND	10.0	ug/kg	SW846 8260B
1,1-Dichloroethane	ND	5.00	ug/kg	SW846 8260B
1,2-Dichloroethane	ND	5.00	ug/kg	SW846 8260B
1,1-Dichloroethene	ND	5.00	ug/kg	SW846 8260B
cis-1,2-Dichloroethene	ND	5.00	ug/kg	SW846 8260B
trans-1,2-Dichloroethene	ND	5.00	ug/kg	SW846 8260B
1,2-Dichloropropane	ND	5.00	ug/kg	SW846 8260B
cis-1,3-Dichloropropene	ND	5.00	ug/kg	SW846 8260B
trans-1,3-Dichloropropene	ND	5.00	ug/kg	SW846 8260B
Ethylbenzene	ND	5.00	ug/kg	SW846 8260B
2-Hexanone	ND	20.0	ug/kg	SW846 8260B
Methylene chloride	ND	5.00	ug/kg	SW846 8260B
4-Methyl-2-pentanone	ND	20.0	ug/kg	SW846 8260B
Methyl tert-butyl ether (MTBE)	ND	10.0	ug/kg	SW846 8260B
Styrene	ND	5.00	ug/kg	SW846 8260B
1,1,2,2-Tetrachloroethane	ND	5.00	ug/kg	SW846 8260B
Tetrachloroethene	ND	5.00	ug/kg	SW846 8260B
Toluene	ND	5.00	ug/kg	SW846 8260B
1,1,1-Trichloroethane	ND	5.00	ug/kg	SW846 8260B
1,1,2-Trichloroethane	ND	5.00	ug/kg	SW846 8260B
Trichloroethene	ND	5.00	ug/kg	SW846 8260B
Vinyl chloride	ND	5.00	ug/kg	SW846 8260B

SURROGATE	PERCENT RECOVERY	RECOVERY LIMITS
Toluene-d8	111	(85.0- 115)
Dibromofluoromethane	101	(76.0- 126)
1,2-Dichloroethane-d4	105	(71.0- 128)

(Continued on next page)

METHOD BLANK REPORT

GC/MS Volatiles

Client Lot #...: F1D010496 **Work Order #...:** MGTVG1AA **Matrix.....:** SOLID

PARAMETER	RESULT	REPORTING LIMIT	UNITS	METHOD
4-Bromofluorobenzene	113	(85.0- 120)		

NOTE(S):

Calculations are performed before rounding to avoid round-off errors in calculated results.

METHOD BLANK REPORT

GC/MS Volatiles

Client Lot #...: F1D010496 **Work Order #...:** MGVHE1AA **Matrix.....:** SOLID
MB Lot-Sample #: F1D110000-275

Prep Date.....: 04/11/11 **Analysis Time..:** 10:46
Analysis Date..: 04/11/11 **Prep Batch #...:** 1101275
Dilution Factor: 1

PARAMETER	RESULT	REPORTING LIMIT	UNITS	METHOD
Xylenes (total)	ND	10.0	ug/kg	SW846 8260B
Acetone	ND	20.0	ug/kg	SW846 8260B
Benzene	ND	5.00	ug/kg	SW846 8260B
Bromodichloromethane	ND	5.00	ug/kg	SW846 8260B
Bromoform	ND	5.00	ug/kg	SW846 8260B
Bromomethane	ND	10.0	ug/kg	SW846 8260B
2-Butanone (MEK)	ND	20.0	ug/kg	SW846 8260B
Carbon tetrachloride	ND	5.00	ug/kg	SW846 8260B
Chlorobenzene	ND	5.00	ug/kg	SW846 8260B
Dibromochloromethane	ND	5.00	ug/kg	SW846 8260B
Chloroethane	ND	10.0	ug/kg	SW846 8260B
Chloroform	ND	5.00	ug/kg	SW846 8260B
Chloromethane	ND	10.0	ug/kg	SW846 8260B
1,1-Dichloroethane	ND	5.00	ug/kg	SW846 8260B
1,2-Dichloroethane	ND	5.00	ug/kg	SW846 8260B
1,1-Dichloroethene	ND	5.00	ug/kg	SW846 8260B
cis-1,2-Dichloroethene	ND	5.00	ug/kg	SW846 8260B
trans-1,2-Dichloroethene	ND	5.00	ug/kg	SW846 8260B
1,2-Dichloropropane	ND	5.00	ug/kg	SW846 8260B
cis-1,3-Dichloropropene	ND	5.00	ug/kg	SW846 8260B
trans-1,3-Dichloropropene	ND	5.00	ug/kg	SW846 8260B
Ethylbenzene	ND	5.00	ug/kg	SW846 8260B
2-Hexanone	ND	20.0	ug/kg	SW846 8260B
Methylene chloride	ND	5.00	ug/kg	SW846 8260B
4-Methyl-2-pentanone	ND	20.0	ug/kg	SW846 8260B
Methyl tert-butyl ether (MTBE)	ND	10.0	ug/kg	SW846 8260B
Styrene	ND	5.00	ug/kg	SW846 8260B
1,1,2,2-Tetrachloroethane	ND	5.00	ug/kg	SW846 8260B
Tetrachloroethene	ND	5.00	ug/kg	SW846 8260B
Toluene	ND	5.00	ug/kg	SW846 8260B
1,1,1-Trichloroethane	ND	5.00	ug/kg	SW846 8260B
1,1,2-Trichloroethane	ND	5.00	ug/kg	SW846 8260B
Trichloroethene	ND	5.00	ug/kg	SW846 8260B
Vinyl chloride	ND	5.00	ug/kg	SW846 8260B

SURROGATE	PERCENT RECOVERY	RECOVERY LIMITS
Toluene-d8	106	(85.0- 115)
Dibromofluoromethane	98.8	(76.0- 126)
1,2-Dichloroethane-d4	95.1	(71.0- 128)

(Continued on next page)

METHOD BLANK REPORT

GC/MS Volatiles

Client Lot #...: F1D010496 **Work Order #...:** MGVHE1AA **Matrix.....:** SOLID

PARAMETER	RESULT	REPORTING LIMIT	UNITS	METHOD
4-Bromofluorobenzene	105	(85.0- 120)		

NOTE(S):

Calculations are performed before rounding to avoid round-off errors in calculated results.

LABORATORY CONTROL SAMPLE EVALUATION REPORT

GC/MS Volatiles

Client Lot #...: F1D010496 Work Order #...: MGTVG1AC Matrix.....: SOLID
LCS Lot-Sample#: F1D070000-312
Prep Date.....: 04/07/11 Analysis Date..: 04/07/11
Prep Batch #...: 1097312 Analysis Time..: 12:16
Dilution Factor: 1

PARAMETER	PERCENT RECOVERY	RECOVERY LIMITS	METHOD
Acetone	97.1	(20.0- 160	SW846 8260B
Benzene	102	(75.0- 125	SW846 8260B
Bromodichloromethane	106	(70.0- 130	SW846 8260B
Bromoform	103	(55.0- 135	SW846 8260B
Bromomethane	87.1	(30.0- 160	SW846 8260B
2-Butanone (MEK)	104	(30.0- 160	SW846 8260B
Carbon tetrachloride	104	(65.0- 135	SW846 8260B
Chlorobenzene	103	(75.0- 125	SW846 8260B
Dibromochloromethane	111	(65.0- 130	SW846 8260B
Carbon disulfide	104	(45.0- 160	SW846 8260B
Chloroethane	86.5	(40.0- 155	SW846 8260B
Chloroform	101	(70.0- 125	SW846 8260B
Chloromethane	93.6	(50.0- 130	SW846 8260B
1,2-Dichloroethene (total)	101	(85.0- 115	SW846 8260B
1,1-Dichloroethane	101	(75.0- 125	SW846 8260B
1,2-Dichloroethane	99.5	(70.0- 135	SW846 8260B
1,1-Dichloroethene	111	(65.0- 135	SW846 8260B
cis-1,2-Dichloroethene	103	(65.0- 125	SW846 8260B
trans-1,2-Dichloroethene	99.0	(65.0- 135	SW846 8260B
1,2-Dichloropropane	101	(70.0- 120	SW846 8260B
cis-1,3-Dichloropropene	107	(70.0- 125	SW846 8260B
m-Xylene & p-Xylene	110	(80.0- 125	SW846 8260B
trans-1,3-Dichloropropene	108	(65.0- 125	SW846 8260B
o-Xylene	107	(75.0- 125	SW846 8260B
Ethylbenzene	110	(75.0- 125	SW846 8260B
2-Hexanone	110	(45.0- 145	SW846 8260B
1,3-Dichlorobenzene	111	(70.0- 125	SW846 8260B
1,4-Dichlorobenzene	105	(70.0- 125	SW846 8260B
Methylene chloride	99.0	(55.0- 140	SW846 8260B
4-Methyl-2-pentanone	105	(45.0- 145	SW846 8260B
Methyl tert-butyl ether (MTBE)	104	(80.0- 120	SW846 8260B
Styrene	108	(75.0- 125	SW846 8260B

(Continued on next page)

LABORATORY CONTROL SAMPLE EVALUATION REPORT

GC/MS Volatiles

Client Lot #...: F1D010496 Work Order #...: MGTVG1AC Matrix.....: SOLID
LCS Lot-Sample#: F1D070000-312

PARAMETER	PERCENT RECOVERY	RECOVERY LIMITS	METHOD
1,1,2,2-Tetrachloroethane	107	(55.0- 130	SW846 8260B
Tetrachloroethene	104	(65.0- 140	SW846 8260B
Toluene	105	(70.0- 125	SW846 8260B
1,1,1-Trichloroethane	100	(70.0- 135	SW846 8260B
1,1,2-Trichloroethane	104	(60.0- 125	SW846 8260B
Trichloroethene	102	(75.0- 125	SW846 8260B
1,2-Dichlorobenzene	107	(75.0- 120	SW846 8260B
Vinyl chloride	85.1	(60.0- 125	SW846 8260B
Bromobenzene	107	(65.0- 120	SW846 8260B
Bromochloromethane	101	(70.0- 125	SW846 8260B
n-Butylbenzene	112	(65.0- 140	SW846 8260B
sec-Butylbenzene	116	(65.0- 130	SW846 8260B
tert-Butylbenzene	116	(65.0- 130	SW846 8260B
Allyl chloride	104	(61.0- 137	SW846 8260B
2-Chlorotoluene	111	(70.0- 130	SW846 8260B
4-Chlorotoluene	111	(75.0- 125	SW846 8260B
Cyclohexanone	113	(47.0- 140	SW846 8260B
1,2-Dibromo-3-chloropropane (DBCP)	104	(40.0- 135	SW846 8260B
1,2-Dibromoethane (EDB)	104	(70.0- 125	SW846 8260B
trans-1,4-Dichloro-2-butene	108	(57.0- 140	SW846 8260B
Dichlorodifluoromethane (Freon 12)	83.6	(35.0- 135	SW846 8260B
1,3-Dichloropropane	104	(75.0- 125	SW846 8260B
2,2-Dichloropropane	90.9	(65.0- 135	SW846 8260B
1,1-Dichloropropene	102	(70.0- 135	SW846 8260B
Ethyl methacrylate	103	(67.0- 130	SW846 8260B
Freon 113	112	(73.0- 124	SW846 8260B
Hexachlorobutadiene	109	(55.0- 140	SW846 8260B
n-Hexane	106	(71.0- 136	SW846 8260B
Isopropylbenzene	116	(75.0- 130	SW846 8260B
4-Isopropyltoluene	115	(75.0- 135	SW846 8260B
Methyl methacrylate	108	(67.0- 127	SW846 8260B
Naphthalene	107	(40.0- 125	SW846 8260B
2-Nitropropane	93.7	(66.0- 137	SW846 8260B
n-Propylbenzene	117	(65.0- 135	SW846 8260B

(Continued on next page)

LABORATORY CONTROL SAMPLE EVALUATION REPORT

GC/MS Volatiles

Client Lot #...: F1D010496 Work Order #...: MGTVG1AC Matrix.....: SOLID
LCS Lot-Sample#: F1D070000-312

PARAMETER	PERCENT RECOVERY	RECOVERY LIMITS	METHOD
1,1,1,2-Tetrachloroethane	107	(75.0- 125	SW846 8260B
Tetrahydrofuran	106	(78.0- 127	SW846 8260B
1,2,3-Trichlorobenzene	107	(60.0- 135	SW846 8260B
1,2,4-Trichloro-benzene	107	(65.0- 130	SW846 8260B
Trichlorofluoromethane	87.8	(25.0- 185	SW846 8260B
1,3,5-Trimethylbenzene	115	(65.0- 135	SW846 8260B
Ethyl ether	100	(73.0- 123	SW846 8260B
1-Butanol	97.6	(57.0- 133	SW846 8260B
Acetonitrile	95.0	(67.0- 136	SW846 8260B
Ethyl acetate	106	(76.0- 123	SW846 8260B
2-Chloroethyl vinyl ether	111	(27.0- 140	SW846 8260B
Iodomethane	101	(75.0- 130	SW846 8260B
Vinyl acetate	103	(65.0- 140	SW846 8260B
Acrolein	102	(40.0- 140	SW846 8260B
Acrylonitrile	96.4	(72.0- 140	SW846 8260B
Cyclohexane	103	(85.0- 115	SW846 8260B
Isobutanol	108	(65.0- 140	SW846 8260B
Methacrylonitrile	102	(80.0- 131	SW846 8260B
Methylcyclohexane	100	(85.0- 115	SW846 8260B
Propionitrile	101	(79.0- 130	SW846 8260B
1,4-Dioxane	101	(72.0- 136	SW846 8260B
Methyl acetate	110	(66.0- 130	SW846 8260B
2-Chloro-1,3-butadiene	104	(81.0- 121	SW846 8260B
1,2-Dichloro-1,1,2,2-tetrafluoroethane	107	(52.0- 140	SW846 8260B
1,2,3-Trichloropropane	104	(65.0- 130	SW846 8260B
1,2,4-Trimethylbenzene	114	(65.0- 135	SW846 8260B
Dibromomethane	101	(75.0- 130	SW846 8260B

SURROGATE	PERCENT RECOVERY	RECOVERY LIMITS
Toluene-d8	102	(85.0- 115
Dibromofluoromethane	101	(76.0- 126
1,2-Dichloroethane-d4	101	(71.0- 128
4-Bromofluorobenzene	105	(85.0- 120

(Continued on next page)

LABORATORY CONTROL SAMPLE EVALUATION REPORT

GC/MS Volatiles

Client Lot #...: F1D010496 **Work Order #...:** MGTVG1AC **Matrix.....:** SOLID
LCS Lot-Sample#: F1D070000-312

NOTE(S):

Calculations are performed before rounding to avoid round-off errors in calculated results.

Bold print denotes control parameters

LABORATORY CONTROL SAMPLE EVALUATION REPORT

GC/MS Volatiles

Client Lot #...: F1D010496 Work Order #...: MGVHE1AC-LCS Matrix.....: SOLID
LCS Lot-Sample#: F1D110000-275 MGVHE1AD-LCSD
Prep Date.....: 04/11/11 Analysis Date..: 04/11/11
Prep Batch #...: 1101275 Analysis Time..: 07:47
Dilution Factor: 1

PARAMETER	PERCENT RECOVERY	RECOVERY LIMITS	RPD	RPD LIMITS	METHOD
Acetone	96.0	(20.0- 160			SW846 8260B
	95.8	(20.0- 160	0.180	(0-20.0	SW846 8260B
Benzene	102	(75.0- 125			SW846 8260B
	103	(75.0- 125	0.990	(0-20.0	SW846 8260B
Bromodichloromethane	106	(70.0- 130			SW846 8260B
	106	(70.0- 130	0.010	(0-20.0	SW846 8260B
Bromoform	103	(55.0- 135			SW846 8260B
	105	(55.0- 135	1.59	(0-20.0	SW846 8260B
Bromomethane	81.0	(30.0- 160			SW846 8260B
	86.5	(30.0- 160	6.61	(0-20.0	SW846 8260B
2-Butanone (MEK)	100	(30.0- 160			SW846 8260B
	110	(30.0- 160	8.70	(0-20.0	SW846 8260B
Carbon tetrachloride	98.7	(65.0- 135			SW846 8260B
	101	(65.0- 135	2.50	(0-20.0	SW846 8260B
Chlorobenzene	101	(75.0- 125			SW846 8260B
	105	(75.0- 125	3.10	(0-20.0	SW846 8260B
Dibromochloromethane	114	(65.0- 130			SW846 8260B
	115	(65.0- 130	1.19	(0-20.0	SW846 8260B
Carbon disulfide	83.7	(45.0- 160			SW846 8260B
	88.2	(45.0- 160	5.18	(0-20.0	SW846 8260B
Chloroethane	87.0	(40.0- 155			SW846 8260B
	88.6	(40.0- 155	1.84	(0-20.0	SW846 8260B
Chloroform	99.7	(70.0- 125			SW846 8260B
	104	(70.0- 125	3.81	(0-20.0	SW846 8260B
Chloromethane	98.6	(50.0- 130			SW846 8260B
	99.9	(50.0- 130	1.33	(0-20.0	SW846 8260B
1,2-Dichloroethene (total)	102	(85.0- 115			SW846 8260B
	104	(85.0- 115	1.94	(0-20.0	SW846 8260B
1,1-Dichloroethane	99.5	(75.0- 125			SW846 8260B
	102	(75.0- 125	2.97	(0-20.0	SW846 8260B
1,2-Dichloroethane	101	(70.0- 135			SW846 8260B
	103	(70.0- 135	2.35	(0-20.0	SW846 8260B
1,1-Dichloroethene	80.4	(65.0- 135			SW846 8260B
	98.8 p	(65.0- 135	20.6	(0-20.0	SW846 8260B
cis-1,2-Dichloroethene	103	(65.0- 125			SW846 8260B
	107	(65.0- 125	3.37	(0-20.0	SW846 8260B
trans-1,2-Dichloroethene	101	(65.0- 135			SW846 8260B
	101	(65.0- 135	0.530	(0-20.0	SW846 8260B

(Continued on next page)

LABORATORY CONTROL SAMPLE EVALUATION REPORT

GC/MS Volatiles

Client Lot #...: F1D010496 Work Order #...: MGVHE1AC-LCS Matrix.....: SOLID
LCS Lot-Sample#: F1D110000-275 MGVHE1AD-LCSD

PARAMETER	PERCENT RECOVERY	RECOVERY LIMITS	RPD	RPD LIMITS	METHOD
1,2-Dichloropropane	102	(70.0- 120			SW846 8260B
	102	(70.0- 120	0.150	(0-20.0	SW846 8260B
cis-1,3-Dichloropropene	108	(70.0- 125			SW846 8260B
	107	(70.0- 125	0.660	(0-20.0	SW846 8260B
m-Xylene & p-Xylene	108	(80.0- 125			SW846 8260B
	110	(80.0- 125	2.01	(0-20.0	SW846 8260B
trans-1,3-Dichloropropene	108	(65.0- 125			SW846 8260B
	111	(65.0- 125	3.32	(0-20.0	SW846 8260B
o-Xylene	105	(75.0- 125			SW846 8260B
	106	(75.0- 125	1.26	(0-20.0	SW846 8260B
Ethylbenzene	107	(75.0- 125			SW846 8260B
	108	(75.0- 125	1.21	(0-20.0	SW846 8260B
2-Hexanone	116	(45.0- 145			SW846 8260B
	116	(45.0- 145	0.250	(0-20.0	SW846 8260B
1,3-Dichlorobenzene	107	(70.0- 125			SW846 8260B
	108	(70.0- 125	0.650	(0-20.0	SW846 8260B
1,4-Dichlorobenzene	104	(70.0- 125			SW846 8260B
	104	(70.0- 125	0.270	(0-20.0	SW846 8260B
Methylene chloride	100	(55.0- 140			SW846 8260B
	102	(55.0- 140	1.66	(0-20.0	SW846 8260B
4-Methyl-2-pentanone	104	(45.0- 145			SW846 8260B
	110	(45.0- 145	6.02	(0-20.0	SW846 8260B
Methyl tert-butyl ether (MTBE)	106	(80.0- 120			SW846 8260B
	110	(80.0- 120	4.04	(0-20.0	SW846 8260B
Styrene	108	(75.0- 125			SW846 8260B
	111	(75.0- 125	1.90	(0-20.0	SW846 8260B
1,1,2,2-Tetrachloroethane	113	(55.0- 130			SW846 8260B
	114	(55.0- 130	0.840	(0-20.0	SW846 8260B
Tetrachloroethene	104	(65.0- 140			SW846 8260B
	107	(65.0- 140	2.84	(0-20.0	SW846 8260B
Toluene	104	(70.0- 125			SW846 8260B
	106	(70.0- 125	1.67	(0-20.0	SW846 8260B
1,1,1-Trichloroethane	99.8	(70.0- 135			SW846 8260B
	101	(70.0- 135	1.39	(0-20.0	SW846 8260B
1,1,2-Trichloroethane	106	(60.0- 125			SW846 8260B
	110	(60.0- 125	3.54	(0-20.0	SW846 8260B
Trichloroethene	98.8	(75.0- 125			SW846 8260B
	100	(75.0- 125	1.38	(0-20.0	SW846 8260B
1,2-Dichlorobenzene	104	(75.0- 120			SW846 8260B
	107	(75.0- 120	2.71	(0-20.0	SW846 8260B

(Continued on next page)

LABORATORY CONTROL SAMPLE EVALUATION REPORT

GC/MS Volatiles

Client Lot #...: F1D010496 Work Order #...: MGVHE1AC-LCS Matrix.....: SOLID
LCS Lot-Sample#: F1D110000-275 MGVHE1AD-LCSD

PARAMETER	PERCENT RECOVERY	RECOVERY LIMITS	RPD	RPD LIMITS	METHOD
Vinyl chloride	89.8	(60.0- 125			SW846 8260B
	88.7	(60.0- 125	1.16	(0-20.0	SW846 8260B
Bromobenzene	105	(65.0- 120			SW846 8260B
	106	(65.0- 120	1.04	(0-20.0	SW846 8260B
Bromochloromethane	105	(70.0- 125			SW846 8260B
	109	(70.0- 125	3.59	(0-20.0	SW846 8260B
n-Butylbenzene	106	(65.0- 140			SW846 8260B
	108	(65.0- 140	1.06	(0-20.0	SW846 8260B
sec-Butylbenzene	109	(65.0- 130			SW846 8260B
	111	(65.0- 130	1.10	(0-20.0	SW846 8260B
tert-Butylbenzene	110	(65.0- 130			SW846 8260B
	111	(65.0- 130	0.270	(0-20.0	SW846 8260B
Allyl chloride	101	(61.0- 137			SW846 8260B
	103	(61.0- 137	1.39	(0-20.0	SW846 8260B
2-Chlorotoluene	105	(70.0- 130			SW846 8260B
	107	(70.0- 130	2.01	(0-20.0	SW846 8260B
4-Chlorotoluene	106	(75.0- 125			SW846 8260B
	106	(75.0- 125	0.560	(0-20.0	SW846 8260B
Cyclohexanone	118	(47.0- 140			SW846 8260B
	112	(47.0- 140	4.48	(0-20.0	SW846 8260B
1,2-Dibromo-3-chloropropane (DBCP)	107	(40.0- 135			SW846 8260B
	118	(40.0- 135	9.47	(0-20.0	SW846 8260B
1,2-Dibromoethane (EDB)	108	(70.0- 125			SW846 8260B
	110	(70.0- 125	1.13	(0-20.0	SW846 8260B
trans-1,4-Dichloro-2-butene	109	(57.0- 140			SW846 8260B
	111	(57.0- 140	1.77	(0-20.0	SW846 8260B
Dichlorodifluoromethane (Freon 12)	96.2	(35.0- 135			SW846 8260B
	95.9	(35.0- 135	0.270	(0-20.0	SW846 8260B
1,3-Dichloropropane	104	(75.0- 125			SW846 8260B
	108	(75.0- 125	3.47	(0-20.0	SW846 8260B
2,2-Dichloropropane	96.6	(65.0- 135			SW846 8260B
	99.2	(65.0- 135	2.63	(0-20.0	SW846 8260B
1,1-Dichloropropene	101	(70.0- 135			SW846 8260B
	103	(70.0- 135	2.41	(0-20.0	SW846 8260B
Ethyl methacrylate	105	(67.0- 130			SW846 8260B
	107	(67.0- 130	2.56	(0-20.0	SW846 8260B

(Continued on next page)

LABORATORY CONTROL SAMPLE EVALUATION REPORT

GC/MS Volatiles

Client Lot #...: F1D010496 Work Order #...: MGVHE1AC-LCS Matrix.....: SOLID
LCS Lot-Sample#: F1D110000-275 MGVHE1AD-LCSD

PARAMETER	PERCENT RECOVERY	RECOVERY LIMITS	RPD	RPD LIMITS	METHOD
Freon 113	96.7	(73.0- 124			SW846 8260B
	104	(73.0- 124	7.39	(0-20.0	SW846 8260B
Hexachlorobutadiene	98.7	(55.0- 140			SW846 8260B
	102	(55.0- 140	2.81	(0-20.0	SW846 8260B
n-Hexane	110	(71.0- 136			SW846 8260B
	114	(71.0- 136	3.68	(0-20.0	SW846 8260B
Isopropylbenzene	110	(75.0- 130			SW846 8260B
	110	(75.0- 130	0.120	(0-20.0	SW846 8260B
4-Isopropyltoluene	109	(75.0- 135			SW846 8260B
	110	(75.0- 135	0.730	(0-20.0	SW846 8260B
Methyl methacrylate	113	(67.0- 127			SW846 8260B
	118	(67.0- 127	3.70	(0-20.0	SW846 8260B
Naphthalene	114	(40.0- 125			SW846 8260B
	119	(40.0- 125	3.97	(0-20.0	SW846 8260B
2-Nitropropane	125	(66.0- 137			SW846 8260B
	122	(66.0- 137	2.10	(0-20.0	SW846 8260B
n-Propylbenzene	112	(65.0- 135			SW846 8260B
	111	(65.0- 135	0.190	(0-20.0	SW846 8260B
1,1,1,2-Tetrachloroethane	101	(75.0- 125			SW846 8260B
	103	(75.0- 125	2.39	(0-20.0	SW846 8260B
Tetrahydrofuran	116	(78.0- 127			SW846 8260B
	122	(78.0- 127	4.60	(0-20.0	SW846 8260B
1,2,3-Trichlorobenzene	108	(60.0- 135			SW846 8260B
	112	(60.0- 135	3.53	(0-20.0	SW846 8260B
1,2,4-Trichloro-benzene	107	(65.0- 130			SW846 8260B
	109	(65.0- 130	2.39	(0-20.0	SW846 8260B
Trichlorofluoromethane	93.6	(25.0- 185			SW846 8260B
	93.1	(25.0- 185	0.470	(0-20.0	SW846 8260B
1,3,5-Trimethylbenzene	108	(65.0- 135			SW846 8260B
	109	(65.0- 135	1.47	(0-20.0	SW846 8260B
Ethyl ether	101	(73.0- 123			SW846 8260B
	107	(73.0- 123	5.09	(0-20.0	SW846 8260B
1-Butanol	101	(57.0- 133			SW846 8260B
	103	(57.0- 133	1.59	(0-20.0	SW846 8260B
Acetonitrile	95.7	(67.0- 136			SW846 8260B
	99.1	(67.0- 136	3.45	(0-20.0	SW846 8260B
Ethyl acetate	114	(76.0- 123			SW846 8260B
	115	(76.0- 123	0.780	(0-20.0	SW846 8260B
2-Chloroethyl vinyl ether	111	(27.0- 140			SW846 8260B
	110	(27.0- 140	0.500	(0-20.0	SW846 8260B

(Continued on next page)

LABORATORY CONTROL SAMPLE EVALUATION REPORT

GC/MS Volatiles

Client Lot #...: F1D010496 Work Order #...: MGVHE1AC-LCS Matrix.....: SOLID
LCS Lot-Sample#: F1D110000-275 MGVHE1AD-LCSD

PARAMETER	PERCENT RECOVERY	RECOVERY LIMITS	RPD	RPD LIMITS	METHOD
Iodomethane	93.1	(75.0- 130			SW846 8260B
	93.9	(75.0- 130	0.940	(0-20.0	SW846 8260B
Vinyl acetate	112	(65.0- 140			SW846 8260B
	108	(65.0- 140	3.25	(0-20.0	SW846 8260B
Acrolein	116	(40.0- 140			SW846 8260B
	124	(40.0- 140	7.12	(0-20.0	SW846 8260B
Acrylonitrile	109	(72.0- 140			SW846 8260B
	111	(72.0- 140	1.48	(0-20.0	SW846 8260B
Cyclohexane	103	(85.0- 115			SW846 8260B
	107	(85.0- 115	4.12	(0-20.0	SW846 8260B
Isobutanol	109	(65.0- 140			SW846 8260B
	117	(65.0- 140	6.92	(0-20.0	SW846 8260B
Methacrylonitrile	106	(80.0- 131			SW846 8260B
	110	(80.0- 131	3.22	(0-20.0	SW846 8260B
Methylcyclohexane	100	(85.0- 115			SW846 8260B
	102	(85.0- 115	2.13	(0-20.0	SW846 8260B
Propionitrile	108	(79.0- 130			SW846 8260B
	112	(79.0- 130	3.57	(0-20.0	SW846 8260B
1,4-Dioxane	106	(72.0- 136			SW846 8260B
	120	(72.0- 136	11.8	(0-20.0	SW846 8260B
Methyl acetate	114	(66.0- 130			SW846 8260B
	124	(66.0- 130	8.41	(0-20.0	SW846 8260B
2-Chloro-1,3-butadiene	102	(81.0- 121			SW846 8260B
	105	(81.0- 121	2.60	(0-20.0	SW846 8260B
1,2-Dichloro-1,1,2,2-tetrafluoroethane	117	(52.0- 140			SW846 8260B
	120	(52.0- 140	3.14	(0-20.0	SW846 8260B
1,2,3-Trichloropropane	105	(65.0- 130			SW846 8260B
	108	(65.0- 130	3.13	(0-20.0	SW846 8260B
1,2,4-Trimethylbenzene	108	(65.0- 135			SW846 8260B
	109	(65.0- 135	0.600	(0-20.0	SW846 8260B
Dibromomethane	104	(75.0- 130			SW846 8260B
	108	(75.0- 130	4.34	(0-20.0	SW846 8260B

SURROGATE	PERCENT RECOVERY	RECOVERY LIMITS
Toluene-d8	101	(85.0- 115
	105	(85.0- 115
Dibromofluoromethane	102	(76.0- 126
	107	(76.0- 126
1,2-Dichloroethane-d4	96.4	(71.0- 128
	103	(71.0- 128
4-Bromofluorobenzene	103	(85.0- 120
	104	(85.0- 120

(Continued on next page)

LABORATORY CONTROL SAMPLE EVALUATION REPORT

GC/MS Volatiles

Client Lot #...: F1D010496 **Work Order #...:** MGVHE1AC-LCS **Matrix.....:** SOLID
LCS Lot-Sample#: F1D110000-275 MGVHE1AD-LCSD

SURROGATE	PERCENT RECOVERY	RECOVERY LIMITS

NOTE(S):

Calculations are performed before rounding to avoid round-off errors in calculated results.

Bold print denotes control parameters

p Relative percent difference (RPD) is outside stated control limits.

MATRIX SPIKE SAMPLE EVALUATION REPORT

GC/MS Volatiles

Client Lot #...: F1D010496 Work Order #...: MGGMV1A5-MS Matrix.....: SOLID
MS Lot-Sample #: F1D010496-002 MGGMV1A6-MSD
Date Sampled...: 03/31/11 10:50 Date Received..: 04/01/11
Prep Date.....: 04/07/11 Analysis Date..: 04/07/11
Prep Batch #...: 1097312 Analysis Time..: 12:50
Dilution Factor: 1 % Moisture.....: 15

PARAMETER	PERCENT RECOVERY	RECOVERY LIMITS	RPD	RPD LIMITS	METHOD
Acetone	81.2	(20.0- 160			SW846 8260B
	92.2	(20.0- 160	17.4	(0-20.0)	SW846 8260B
Benzene	99.3	(75.0- 125			SW846 8260B
	101	(75.0- 125	6.04	(0-20.0)	SW846 8260B
Bromodichloromethane	98.7	(70.0- 130			SW846 8260B
	99.4	(70.0- 130	5.30	(0-20.0)	SW846 8260B
Bromoform	99.1	(55.0- 135			SW846 8260B
	125 p	(55.0- 135	28.0	(0-20.0)	SW846 8260B
Bromomethane	94.4	(30.0- 160			SW846 8260B
	90.1	(30.0- 160	0.02	(0-20.0)	SW846 8260B
2-Butanone (MEK)	88.7	(30.0- 160			SW846 8260B
	95.3	(30.0- 160	11.9	(0-20.0)	SW846 8260B
Carbon tetrachloride	102	(65.0- 135			SW846 8260B
	104	(65.0- 135	6.74	(0-20.0)	SW846 8260B
Chlorobenzene	100	(75.0- 125			SW846 8260B
	99.0	(75.0- 125	3.24	(0-20.0)	SW846 8260B
Dibromochloromethane	102	(65.0- 130			SW846 8260B
	116	(65.0- 130	17.0	(0-20.0)	SW846 8260B
Carbon disulfide	90.0	(45.0- 160			SW846 8260B
	80.4	(45.0- 160	6.58	(0-20.0)	SW846 8260B
Chloroethane	83.8	(40.0- 155			SW846 8260B
	86.9	(40.0- 155	8.22	(0-20.0)	SW846 8260B
Chloroform	97.0	(70.0- 125			SW846 8260B
	101	(70.0- 125	8.61	(0-20.0)	SW846 8260B
Chloromethane	90.4	(50.0- 130			SW846 8260B
	99.6	(50.0- 130	14.3	(0-20.0)	SW846 8260B
1,2-Dichloroethene (total)	95.2	(85.0- 115			SW846 8260B
	91.7	(85.0- 115	0.90	(0-20.0)	SW846 8260B
1,1-Dichloroethane	96.8	(75.0- 125			SW846 8260B
	103	(75.0- 125	11.0	(0-20.0)	SW846 8260B
1,2-Dichloroethane	92.8	(70.0- 135			SW846 8260B
	93.4	(70.0- 135	5.31	(0-20.0)	SW846 8260B
1,1-Dichloroethene	98.7	(65.0- 135			SW846 8260B
	91.7	(65.0- 135	2.78	(0-20.0)	SW846 8260B
cis-1,2-Dichloroethene	97.2	(65.0- 125			SW846 8260B
	96.7	(65.0- 125	4.05	(0-20.0)	SW846 8260B
trans-1,2-Dichloroethene	93.2	(65.0- 135			SW846 8260B
	86.8	(65.0- 135	2.48	(0-20.0)	SW846 8260B

(Continued on next page)

MATRIX SPIKE SAMPLE EVALUATION REPORT

GC/MS Volatiles

Client Lot #...: F1D010496 Work Order #...: MGGMV1A5-MS Matrix.....: SOLID
MS Lot-Sample #: F1D010496-002 MGGMV1A6-MSD

PARAMETER	PERCENT RECOVERY	RECOVERY LIMITS	RPD	RPD LIMITS	METHOD
1,2-Dichloropropane	96.9	(70.0- 120			SW846 8260B
	97.7	(70.0- 120	5.49	(0-20.0)	SW846 8260B
cis-1,3-Dichloropropene	100	(70.0- 125			SW846 8260B
	86.8	(70.0- 125	9.62	(0-20.0)	SW846 8260B
m-Xylene & p-Xylene	106	(80.0- 125			SW846 8260B
	105	(80.0- 125	4.02	(0-20.0)	SW846 8260B
trans-1,3-Dichloropropene	98.2	(65.0- 125			SW846 8260B
	95.2	(65.0- 125	1.56	(0-20.0)	SW846 8260B
o-Xylene	102	(75.0- 125			SW846 8260B
	109	(75.0- 125	10.6	(0-20.0)	SW846 8260B
Ethylbenzene	107	(75.0- 125			SW846 8260B
	107	(75.0- 125	4.74	(0-20.0)	SW846 8260B
2-Hexanone	91.3	(45.0- 145			SW846 8260B
	106	(45.0- 145	19.6	(0-20.0)	SW846 8260B
1,3-Dichlorobenzene	102	(70.0- 125			SW846 8260B
	105	(70.0- 125	6.90	(0-20.0)	SW846 8260B
1,4-Dichlorobenzene	99.5	(70.0- 125			SW846 8260B
	98.8	(70.0- 125	3.94	(0-20.0)	SW846 8260B
Methylene chloride	93.6	(55.0- 140			SW846 8260B
	97.9	(55.0- 140	9.12	(0-20.0)	SW846 8260B
4-Methyl-2-pentanone	90.4	(45.0- 145			SW846 8260B
	110 p	(45.0- 145	23.9	(0-20.0)	SW846 8260B
Methyl tert-butyl ether (MTBE)	90.3	(80.0- 120			SW846 8260B
	102	(80.0- 120	16.8	(0-20.0)	SW846 8260B
Styrene	105	(75.0- 125			SW846 8260B
	99.3	(75.0- 125	0.95	(0-20.0)	SW846 8260B
1,1,2,2-Tetrachloroethane	100	(55.0- 130			SW846 8260B
	142 a,p	(55.0- 130	39.1	(0-20.0)	SW846 8260B
Tetrachloroethene	100	(65.0- 140			SW846 8260B
	99.5	(65.0- 140	3.88	(0-20.0)	SW846 8260B
Toluene	103	(70.0- 125			SW846 8260B
	110	(70.0- 125	11.9	(0-20.0)	SW846 8260B
1,1,1-Trichloroethane	99.8	(70.0- 135			SW846 8260B
	106	(70.0- 135	10.3	(0-20.0)	SW846 8260B
1,1,2-Trichloroethane	95.9	(60.0- 125			SW846 8260B
	111	(60.0- 125	18.8	(0-20.0)	SW846 8260B
Trichloroethene	95.5	(75.0- 125			SW846 8260B
	88.0	(75.0- 125	3.50	(0-20.0)	SW846 8260B
1,2-Dichlorobenzene	97.7	(75.0- 120			SW846 8260B
	108	(75.0- 120	14.4	(0-20.0)	SW846 8260B

(Continued on next page)

MATRIX SPIKE SAMPLE EVALUATION REPORT

GC/MS Volatiles

Client Lot #...: F1D010496 Work Order #...: MGGMV1A5-MS Matrix.....: SOLID
MS Lot-Sample #: F1D010496-002 MGGMV1A6-MSD

PARAMETER	PERCENT RECOVERY	RECOVERY LIMITS	RPD	RPD LIMITS	METHOD
Vinyl chloride	79.3	(60.0- 125			SW846 8260B
	85.0	(60.0- 125	11.6	(0-20.0)	SW846 8260B
Bromobenzene	107	(65.0- 120			SW846 8260B
	120	(65.0- 120	15.5	(0-20.0)	SW846 8260B
Bromochloromethane	91.7	(70.0- 125			SW846 8260B
	95.2	(70.0- 125	8.37	(0-20.0)	SW846 8260B
n-Butylbenzene	95.7	(65.0- 140			SW846 8260B
	81.0	(65.0- 140	12.0	(0-20.0)	SW846 8260B
sec-Butylbenzene	103	(65.0- 130			SW846 8260B
	103	(65.0- 130	4.32	(0-20.0)	SW846 8260B
tert-Butylbenzene	104	(65.0- 130			SW846 8260B
	112	(65.0- 130	11.9	(0-20.0)	SW846 8260B
Allyl chloride	102	(61.0- 137			SW846 8260B
	99.9	(61.0- 137	2.51	(0-20.0)	SW846 8260B
2-Chlorotoluene	107	(70.0- 130			SW846 8260B
	124	(70.0- 130	19.9	(0-20.0)	SW846 8260B
4-Chlorotoluene	110	(75.0- 125			SW846 8260B
	117	(75.0- 125	11.3	(0-20.0)	SW846 8260B
Cyclohexanone	102	(47.0- 140			SW846 8260B
	153 a,p	(47.0- 140	43.8	(0-20.0)	SW846 8260B
1,2-Dibromo-3-chloropropane (DBCP)	95.1	(40.0- 135			SW846 8260B
	131 p	(40.0- 135	36.5	(0-20.0)	SW846 8260B
1,2-Dibromoethane (EDB)	95.0	(70.0- 125			SW846 8260B
	101	(70.0- 125	10.7	(0-20.0)	SW846 8260B
trans-1,4-Dichloro-2-butene	105	(57.0- 140			SW846 8260B
	124 p	(57.0- 140	21.6	(0-20.0)	SW846 8260B
Dichlorodifluoromethane (Freon 12)	81.2	(35.0- 135			SW846 8260B
	87.1	(35.0- 135	11.6	(0-20.0)	SW846 8260B
1,3-Dichloropropane	97.2	(75.0- 125			SW846 8260B
	109	(75.0- 125	15.6	(0-20.0)	SW846 8260B
2,2-Dichloropropane	99.5	(65.0- 135			SW846 8260B
	109	(65.0- 135	13.6	(0-20.0)	SW846 8260B
1,1-Dichloropropene	99.0	(70.0- 135			SW846 8260B
	89.7	(70.0- 135	5.20	(0-20.0)	SW846 8260B
Ethyl methacrylate	92.6	(67.0- 130			SW846 8260B
	102	(67.0- 130	14.7	(0-20.0)	SW846 8260B

(Continued on next page)

MATRIX SPIKE SAMPLE EVALUATION REPORT

GC/MS Volatiles

Client Lot #...: F1D010496 Work Order #...: MGGMV1A5-MS Matrix.....: SOLID
MS Lot-Sample #: F1D010496-002 MGGMV1A6-MSD

PARAMETER	PERCENT RECOVERY	RECOVERY LIMITS	RPD	RPD LIMITS	METHOD
Freon 113	97.1	(73.0- 124			SW846 8260B
	98.7	(73.0- 124	6.24	(0-20.0)	SW846 8260B
Hexachlorobutadiene	63.2	(55.0- 140			SW846 8260B
	42.7 a,p	(55.0- 140	34.2	(0-20.0)	SW846 8260B
n-Hexane	91.2	(71.0- 136			SW846 8260B
	65.3 a,p	(71.0- 136	28.6	(0-20.0)	SW846 8260B
Isopropylbenzene	111	(75.0- 130			SW846 8260B
	134 a,p	(75.0- 130	22.9	(0-20.0)	SW846 8260B
4-Isopropyltoluene	100	(75.0- 135			SW846 8260B
	97.3	(75.0- 135	1.62	(0-20.0)	SW846 8260B
Methyl methacrylate	93.1	(67.0- 127			SW846 8260B
	93.6	(67.0- 127	5.20	(0-20.0)	SW846 8260B
Naphthalene	94.4	(40.0- 125			SW846 8260B
	106	(40.0- 125	16.3	(0-20.0)	SW846 8260B
2-Nitropropane	90.9	(66.0- 137			SW846 8260B
	102	(66.0- 137	16.1	(0-20.0)	SW846 8260B
n-Propylbenzene	112	(65.0- 135			SW846 8260B
	123	(65.0- 135	13.3	(0-20.0)	SW846 8260B
1,1,1,2-Tetrachloroethane	101	(75.0- 125			SW846 8260B
	115	(75.0- 125	18.5	(0-20.0)	SW846 8260B
Tetrahydrofuran	91.9	(78.0- 127			SW846 8260B
	102	(78.0- 127	14.6	(0-20.0)	SW846 8260B
1,2,3-Trichlorobenzene	84.5	(60.0- 135			SW846 8260B
	74.1	(60.0- 135	8.39	(0-20.0)	SW846 8260B
1,2,4-Trichloro-benzene	82.3	(65.0- 130			SW846 8260B
	70.2	(65.0- 130	11.2	(0-20.0)	SW846 8260B
Trichlorofluoromethane	85.0	(25.0- 185			SW846 8260B
	89.9	(25.0- 185	10.2	(0-20.0)	SW846 8260B
1,3,5-Trimethylbenzene	106	(65.0- 135			SW846 8260B
	120	(65.0- 135	16.5	(0-20.0)	SW846 8260B
Ethyl ether	90.3	(73.0- 123			SW846 8260B
	96.0	(73.0- 123	10.7	(0-20.0)	SW846 8260B
1-Butanol	82.8	(57.0- 133			SW846 8260B
	95.1	(57.0- 133	18.5	(0-20.0)	SW846 8260B
Acetonitrile	80.8	(67.0- 136			SW846 8260B
	79.3	(67.0- 136	2.73	(0-20.0)	SW846 8260B
Ethyl acetate	91.0	(76.0- 123			SW846 8260B
	86.7	(76.0- 123	0.15	(0-20.0)	SW846 8260B
2-Chloroethyl vinyl ether	95.5	(27.0- 140			SW846 8260B
	90.1	(27.0- 140	1.22	(0-20.0)	SW846 8260B

(Continued on next page)

MATRIX SPIKE SAMPLE EVALUATION REPORT

GC/MS Volatiles

Client Lot #...: F1D010496 Work Order #...: MGGMV1A5-MS Matrix.....: SOLID
MS Lot-Sample #: F1D010496-002 MGGMV1A6-MSD

PARAMETER	PERCENT RECOVERY	RECOVERY LIMITS	RPD	RPD LIMITS	METHOD
Iodomethane	96.1	(75.0- 130			SW846 8260B
	100	(75.0- 130	8.67	(0-20.0)	SW846 8260B
Vinyl acetate	101	(65.0- 140			SW846 8260B
	72.6 p	(65.0- 140	28.2	(0-20.0)	SW846 8260B
Acrolein	90.8	(40.0- 140			SW846 8260B
	95.5	(40.0- 140	9.67	(0-20.0)	SW846 8260B
Acrylonitrile	83.8	(72.0- 140			SW846 8260B
	95.2	(72.0- 140	17.3	(0-20.0)	SW846 8260B
Cyclohexane	97.1	(85.0- 115			SW846 8260B
	92.9	(85.0- 115	0.24	(0-20.0)	SW846 8260B
Isobutanol	87.7	(65.0- 140			SW846 8260B
	100	(65.0- 140	17.9	(0-20.0)	SW846 8260B
Methacrylonitrile	90.3	(80.0- 131			SW846 8260B
	95.1	(80.0- 131	9.77	(0-20.0)	SW846 8260B
Methylcyclohexane	87.8	(85.0- 115			SW846 8260B
	67.8 a,p	(85.0- 115	21.2	(0-20.0)	SW846 8260B
Propionitrile	88.4	(79.0- 130			SW846 8260B
	95.2	(79.0- 130	12.0	(0-20.0)	SW846 8260B
1,4-Dioxane	97.5	(72.0- 136			SW846 8260B
	103	(72.0- 136	9.72	(0-20.0)	SW846 8260B
Methyl acetate	102	(66.0- 130			SW846 8260B
	117	(66.0- 130	18.7	(0-20.0)	SW846 8260B
2-Chloro-1,3-butadiene	103	(81.0- 121			SW846 8260B
	99.1	(81.0- 121	1.22	(0-20.0)	SW846 8260B
1,2-Dichloro-1,1,2,2-tetrafluoroethane	103	(52.0- 140			SW846 8260B
	113	(52.0- 140	13.9	(0-20.0)	SW846 8260B
1,2,3-Trichloropropane	105	(65.0- 130			SW846 8260B
	142 a,p	(65.0- 130	34.2	(0-20.0)	SW846 8260B
1,2,4-Trimethylbenzene	107	(65.0- 135			SW846 8260B
	119	(65.0- 135	15.1	(0-20.0)	SW846 8260B
Dibromomethane	92.1	(75.0- 130			SW846 8260B
	86.4	(75.0- 130	1.66	(0-20.0)	SW846 8260B

SURROGATE	PERCENT RECOVERY	RECOVERY LIMITS
Toluene-d8	105	(85.0- 115
	116 *	(85.0- 115
Dibromofluoromethane	103	(76.0- 126
	105	(76.0- 126

(Continued on next page)

MATRIX SPIKE SAMPLE EVALUATION REPORT

GC/MS Volatiles

Client Lot #...: F1D010496 **Work Order #...:** MGGMV1A5-MS **Matrix.....:** SOLID
MS Lot-Sample #: F1D010496-002 MGGMV1A6-MSD

SURROGATE	PERCENT RECOVERY	RECOVERY LIMITS
1,2-Dichloroethane-d4	95.8	(71.0- 128
	97.7	(71.0- 128
4-Bromofluorobenzene	110	(85.0- 120
	132 *	(85.0- 120

NOTE(S):

Calculations are performed before rounding to avoid round-off errors in calculated results.

Bold print denotes control parameters

Results and reporting limits have been adjusted for dry weight.

* Surrogate recovery is outside stated control limits.

p Relative percent difference (RPD) is outside stated control limits.

a Spiked analyte recovery is outside stated control limits.

Tetra Tech EC, Inc.

Client Sample ID: 04-PE-IR04/72-001

GC/MS Semivolatiles

Lot-Sample #...: F1D010496-001 **Work Order #...:** MGGMG1A4 **Matrix.....:** SOLID
Date Sampled...: 03/31/11 10:40 **Date Received..:** 04/01/11
Prep Date.....: 04/06/11 **Analysis Date..:** 04/11/11
Prep Batch #...: 1096067 **Analysis Time..:** 17:50
Dilution Factor: 1
% Moisture.....: 4.5 **Method.....:** SW846 8270C

PARAMETER	RESULT	REPORTING LIMIT	UNITS	MDL
Pyridine	ND	691	ug/kg	69.7
Phenol	ND	346	ug/kg	34.9
bis(2-Chloroethyl)-ether	ND	346	ug/kg	35.0
2-Chlorophenol	ND	346	ug/kg	34.9
1,3-Dichlorobenzene	ND	346	ug/kg	34.9
1,4-Dichlorobenzene	ND	346	ug/kg	34.9
1,2-Dichlorobenzene	ND	346	ug/kg	34.9
2-Methylphenol	ND	346	ug/kg	34.9
3-Methylphenol & 4-Methylphenol	ND	691	ug/kg	69.7
bis(2-Chloroisopropyl) ether	ND	346	ug/kg	34.9
N-Nitrosodi-n-propyl-amine	ND	262	ug/kg	34.9
Hexachloroethane	ND	346	ug/kg	34.9
2-Nitrophenol	ND	346	ug/kg	34.9
2,4-Dimethylphenol	ND	346	ug/kg	34.9
Nitrobenzene	ND	346	ug/kg	34.9
bis(2-Chloroethoxy) methane	ND	346	ug/kg	34.9
2,4-Dichlorophenol	ND	346	ug/kg	34.9
1,2,4-Trichloro-benzene	ND	346	ug/kg	34.9
Naphthalene	**62.2 J**	**346**	**ug/kg**	**34.9**
4-Chloroaniline	ND	346	ug/kg	34.9
Hexachlorobutadiene	ND	346	ug/kg	34.9
4-Chloro-3-methylphenol	ND	346	ug/kg	34.9
Hexachlorocyclopenta-diene	ND	1680	ug/kg	346
2,4,6-Trichloro-phenol	ND	346	ug/kg	34.9
2,4,5-Trichloro-phenol	ND	346	ug/kg	34.9
2-Chloronaphthalene	ND	346	ug/kg	34.9
2-Nitroaniline	ND	1680	ug/kg	34.9
Dimethyl phthalate	ND	346	ug/kg	34.9
Acenaphthene	**82.6 J**	**346**	**ug/kg**	**34.9**

(Continued on next page)

Tetra Tech EC, Inc.

Client Sample ID: 04-PE-IR04/72-001

GC/MS Semivolatiles

Lot-Sample #...: F1D010496-001 Work Order #...: MGGMG1A4 Matrix.....: SOLID

PARAMETER	RESULT	REPORTING LIMIT	UNITS	MDL
Acenaphthylene	ND	346	ug/kg	34.9
2,6-Dinitrotoluene	ND	346	ug/kg	34.9
3-Nitroaniline	ND	1680	ug/kg	34.9
2,4-Dinitrophenol	ND	1680	ug/kg	346
4-Nitrophenol	ND	1680	ug/kg	346
Dibenz(a,h)anthracene	ND	220	ug/kg	34.9
Dibenzofuran	ND	346	ug/kg	34.9
2,4-Dinitrotoluene	ND	346	ug/kg	34.9
Diethyl phthalate	ND	346	ug/kg	34.9
Fluorene	**41.2 J**	**346**	**ug/kg**	**34.9**
4-Chlorophenyl phenyl ether	ND	346	ug/kg	34.9
4-Nitroaniline	ND	1680	ug/kg	346
4,6-Dinitro-2-methylphenol	ND	1680	ug/kg	346
N-Nitrosodiphenylamine	ND	346	ug/kg	34.9
Pyrene	**574**	**346**	**ug/kg**	**34.9**
4-Bromophenyl phenyl ether	ND	346	ug/kg	34.9
Hexachlorobenzene	ND	346	ug/kg	34.9
Pentachlorophenol	ND	691	ug/kg	346
Phenanthrene	**524**	**346**	**ug/kg**	**34.9**
Anthracene	**122 J**	**346**	**ug/kg**	**34.9**
Di-n-butyl phthalate	ND	346	ug/kg	34.9
Fluoranthene	**431**	**346**	**ug/kg**	**34.9**
Butyl benzyl phthalate	ND	346	ug/kg	34.9
Benzo(a)anthracene	**529**	**346**	**ug/kg**	**34.9**
3,3'-Dichlorobenzidine	ND	1680	ug/kg	34.9
Chrysene	**579**	**346**	**ug/kg**	**34.9**
bis(2-Ethylhexyl) phthalate	ND	346	ug/kg	45.3
Di-n-octyl phthalate	ND	346	ug/kg	34.9
Benzo(b)fluoranthene	**748**	**346**	**ug/kg**	**34.9**
Benzo(k)fluoranthene	**343 J**	**346**	**ug/kg**	**34.9**
Benzo(a)pyrene	**853**	**220**	**ug/kg**	**34.9**
Indeno(1,2,3-cd)pyrene	**623**	**346**	**ug/kg**	**34.9**
Benzo(ghi)perylene	**509**	**346**	**ug/kg**	**34.9**

SURROGATE	PERCENT RECOVERY	RECOVERY LIMITS
2-Fluorophenol	61.2	(35.- 105)
Phenol-d5	65.4	(40.- 100)
Nitrobenzene-d5	67.8	(35.- 100)
2-Fluorobiphenyl	71.5	(45.- 105)
2,4,6-Tribromophenol	57.6	(35.- 125)
Terphenyl-d14	79.0	(30.- 125)

(Continued on next page)

Tetra Tech EC, Inc.

Client Sample ID: 04-PE-IR04/72-001

GC/MS Semivolatiles

Lot-Sample #...: F1D010496-001 Work Order #...: MGGMG1A4 Matrix.....: SOLID

NOTE(S):

Results and reporting limits have been adjusted for dry weight.

J Estimated result. Result is less than RL.

Tetra Tech EC, Inc.

Client Sample ID: 04-PE-IR04/72-002

GC/MS Semivolatiles

Lot-Sample #...: F1D010496-002 **Work Order #...:** MGGMV1AF **Matrix.....:** SOLID
Date Sampled...: 03/31/11 10:50 **Date Received..:** 04/01/11
Prep Date.....: 04/06/11 **Analysis Date..:** 04/11/11
Prep Batch #...: 1096067 **Analysis Time..:** 19:35
Dilution Factor: 1
% Moisture.....: 15 **Method.....:** SW846 8270C

PARAMETER	RESULT	REPORTING LIMIT	UNITS	MDL
Pyridine	ND	776	ug/kg	78.3
Phenol	ND	388	ug/kg	39.1
bis(2-Chloroethyl)-ether	ND	388	ug/kg	39.3
2-Chlorophenol	ND	388	ug/kg	39.1
1,3-Dichlorobenzene	ND	388	ug/kg	39.1
1,4-Dichlorobenzene	ND	388	ug/kg	39.1
1,2-Dichlorobenzene	ND	388	ug/kg	39.1
2-Methylphenol	ND	388	ug/kg	39.1
3-Methylphenol & 4-Methylphenol	ND	776	ug/kg	78.3
bis(2-Chloroisopropyl) ether	ND	388	ug/kg	39.1
N-Nitrosodi-n-propyl-amine	ND	294	ug/kg	39.1
Hexachloroethane	ND	388	ug/kg	39.1
2-Nitrophenol	ND	388	ug/kg	39.1
2,4-Dimethylphenol	ND	388	ug/kg	39.1
Nitrobenzene	ND	388	ug/kg	39.1
bis(2-Chloroethoxy) methane	ND	388	ug/kg	39.1
2,4-Dichlorophenol	ND	388	ug/kg	39.1
1,2,4-Trichloro-benzene	ND	388	ug/kg	39.1
Naphthalene	ND	388	ug/kg	39.1
4-Chloroaniline	ND	388	ug/kg	39.1
Hexachlorobutadiene	ND	388	ug/kg	39.1
4-Chloro-3-methylphenol	ND	388	ug/kg	39.1
Hexachlorocyclopenta-diene	ND	1880	ug/kg	388
2,4,6-Trichloro-phenol	ND	388	ug/kg	39.1
2,4,5-Trichloro-phenol	ND	388	ug/kg	39.1
2-Chloronaphthalene	ND	388	ug/kg	39.1
2-Nitroaniline	ND	1880	ug/kg	39.1
Dimethyl phthalate	ND	388	ug/kg	39.1
Acenaphthene	**44.7 J**	**388**	**ug/kg**	**39.1**

(Continued on next page)

Tetra Tech EC, Inc.

Client Sample ID: 04-PE-IR04/72-002

GC/MS Semivolatiles

Lot-Sample #...: F1D010496-002 **Work Order #...:** MGGMV1AF **Matrix.....:** SOLID

PARAMETER	RESULT	REPORTING LIMIT	UNITS	MDL
Acenaphthylene	ND	388	ug/kg	39.1
2,6-Dinitrotoluene	ND	388	ug/kg	39.1
3-Nitroaniline	ND	1880	ug/kg	39.1
2,4-Dinitrophenol	ND	1880	ug/kg	388
4-Nitrophenol	ND	1880	ug/kg	388
Dibenz(a,h)anthracene	ND	247	ug/kg	39.1
Dibenzofuran	ND	388	ug/kg	39.1
2,4-Dinitrotoluene	ND	388	ug/kg	39.1
Diethyl phthalate	ND	388	ug/kg	39.1
Fluorene	ND	388	ug/kg	39.1
4-Chlorophenyl phenyl ether	ND	388	ug/kg	39.1
4-Nitroaniline	ND	1880	ug/kg	388
4,6-Dinitro-2-methylphenol	ND	1880	ug/kg	388
N-Nitrosodiphenylamine	ND	388	ug/kg	39.1
Pyrene	**245 J**	**388**	**ug/kg**	**39.1**
4-Bromophenyl phenyl ether	ND	388	ug/kg	39.1
Hexachlorobenzene	ND	388	ug/kg	39.1
Pentachlorophenol	ND	776	ug/kg	388
Phenanthrene	**219 J**	**388**	**ug/kg**	**39.1**
Anthracene	**65.8 J**	**388**	**ug/kg**	**39.1**
Di-n-butyl phthalate	ND	388	ug/kg	39.1
Fluoranthene	**212 J**	**388**	**ug/kg**	**39.1**
Butyl benzyl phthalate	ND	388	ug/kg	39.1
Benzo(a)anthracene	**187 J**	**388**	**ug/kg**	**39.1**
3,3'-Dichlorobenzidine	ND	1880	ug/kg	39.1
Chrysene	**198 J**	**388**	**ug/kg**	**39.1**
bis(2-Ethylhexyl) phthalate	ND	388	ug/kg	50.9
Di-n-octyl phthalate	ND	388	ug/kg	39.1
Benzo(b)fluoranthene	**262 J**	**388**	**ug/kg**	**39.1**
Benzo(k)fluoranthene	**130 J**	**388**	**ug/kg**	**39.1**
Benzo(a)pyrene	**296**	**247**	**ug/kg**	**39.1**
Indeno(1,2,3-cd)pyrene	**123 J**	**388**	**ug/kg**	**39.1**
Benzo(ghi)perylene	**99.6 J**	**388**	**ug/kg**	**39.1**

SURROGATE	PERCENT RECOVERY	RECOVERY LIMITS
2-Fluorophenol	65.3	(35.- 105)
Phenol-d5	70.4	(40.- 100)
Nitrobenzene-d5	73.8	(35.- 100)
2-Fluorobiphenyl	75.9	(45.- 105)
2,4,6-Tribromophenol	74.6	(35.- 125)
Terphenyl-d14	74.6	(30.- 125)

(Continued on next page)

Tetra Tech EC, Inc.

Client Sample ID: 04-PE-IR04/72-002

GC/MS Semivolatiles

Lot-Sample #...: F1D010496-002 Work Order #...: MGGMV1AF Matrix.....: SOLID

NOTE(S):

Results and reporting limits have been adjusted for dry weight.

J Estimated result. Result is less than RL.

Tetra Tech EC, Inc.

Client Sample ID: 04-PE-IR04/72-003

GC/MS Semivolatiles

Lot-Sample #...: F1D010496-003 **Work Order #...:** MGGM01AF **Matrix.....:** SOLID
Date Sampled...: 03/31/11 11:00 **Date Received..:** 04/01/11
Prep Date.....: 04/06/11 **Analysis Date..:** 04/11/11
Prep Batch #...: 1096067 **Analysis Time..:** 20:10
Dilution Factor: 1
% Moisture.....: 12 **Method.....:** SW846 8270C

PARAMETER	RESULT	REPORTING LIMIT	UNITS	MDL
Pyridine	ND	754	ug/kg	76.1
Phenol	ND	377	ug/kg	38.0
bis(2-Chloroethyl)-ether	ND	377	ug/kg	38.1
2-Chlorophenol	ND	377	ug/kg	38.0
1,3-Dichlorobenzene	ND	377	ug/kg	38.0
1,4-Dichlorobenzene	ND	377	ug/kg	38.0
1,2-Dichlorobenzene	ND	377	ug/kg	38.0
2-Methylphenol	ND	377	ug/kg	38.0
3-Methylphenol & 4-Methylphenol	ND	754	ug/kg	76.1
bis(2-Chloroisopropyl) ether	ND	377	ug/kg	38.0
N-Nitrosodi-n-propyl-amine	ND	286	ug/kg	38.0
Hexachloroethane	ND	377	ug/kg	38.0
2-Nitrophenol	ND	377	ug/kg	38.0
2,4-Dimethylphenol	ND	377	ug/kg	38.0
Nitrobenzene	ND	377	ug/kg	38.0
bis(2-Chloroethoxy) methane	ND	377	ug/kg	38.0
2,4-Dichlorophenol	ND	377	ug/kg	38.0
1,2,4-Trichloro-benzene	ND	377	ug/kg	38.0
Naphthalene	ND	377	ug/kg	38.0
4-Chloroaniline	ND	377	ug/kg	38.0
Hexachlorobutadiene	ND	377	ug/kg	38.0
4-Chloro-3-methylphenol	ND	377	ug/kg	38.0
Hexachlorocyclopenta-diene	ND	1830	ug/kg	377
2,4,6-Trichloro-phenol	ND	377	ug/kg	38.0
2,4,5-Trichloro-phenol	ND	377	ug/kg	38.0
2-Chloronaphthalene	ND	377	ug/kg	38.0
2-Nitroaniline	ND	1830	ug/kg	38.0
Dimethyl phthalate	ND	377	ug/kg	38.0
Acenaphthene	ND	377	ug/kg	38.0

(Continued on next page)

Tetra Tech EC, Inc.

Client Sample ID: 04-PE-IR04/72-003

GC/MS Semivolatiles

Lot-Sample #...: F1D010496-003 Work Order #...: MGGM01AF Matrix.....: SOLID

PARAMETER	RESULT	REPORTING LIMIT	UNITS	MDL
Acenaphthylene	ND	377	ug/kg	38.0
2,6-Dinitrotoluene	ND	377	ug/kg	38.0
3-Nitroaniline	ND	1830	ug/kg	38.0
2,4-Dinitrophenol	ND	1830	ug/kg	377
4-Nitrophenol	ND	1830	ug/kg	377
Dibenz(a,h)anthracene	ND	240	ug/kg	38.0
Dibenzofuran	ND	377	ug/kg	38.0
2,4-Dinitrotoluene	ND	377	ug/kg	38.0
Diethyl phthalate	ND	377	ug/kg	38.0
Fluorene	ND	377	ug/kg	38.0
4-Chlorophenyl phenyl ether	ND	377	ug/kg	38.0
4-Nitroaniline	ND	1830	ug/kg	377
4,6-Dinitro-2-methylphenol	ND	1830	ug/kg	377
N-Nitrosodiphenylamine	ND	377	ug/kg	38.0
Pyrene	ND	377	ug/kg	38.0
4-Bromophenyl phenyl ether	ND	377	ug/kg	38.0
Hexachlorobenzene	ND	377	ug/kg	38.0
Pentachlorophenol	ND	754	ug/kg	377
Phenanthrene	ND	377	ug/kg	38.0
Anthracene	ND	377	ug/kg	38.0
Di-n-butyl phthalate	ND	377	ug/kg	38.0
Fluoranthene	ND	377	ug/kg	38.0
Butyl benzyl phthalate	ND	377	ug/kg	38.0
Benzo(a)anthracene	ND	377	ug/kg	38.0
3,3'-Dichlorobenzidine	ND	1830	ug/kg	38.0
Chrysene	ND	377	ug/kg	38.0
bis(2-Ethylhexyl) phthalate	ND	377	ug/kg	49.5
Di-n-octyl phthalate	ND	377	ug/kg	38.0
Benzo(b)fluoranthene	ND	377	ug/kg	38.0
Benzo(k)fluoranthene	ND	377	ug/kg	38.0
Benzo(a)pyrene	ND	240	ug/kg	38.0
Indeno(1,2,3-cd)pyrene	ND	377	ug/kg	38.0
Benzo(ghi)perylene	ND	377	ug/kg	38.0

SURROGATE	PERCENT RECOVERY	RECOVERY LIMITS
2-Fluorophenol	59.1	(35.- 105)
Phenol-d5	65.3	(40.- 100)
Nitrobenzene-d5	66.5	(35.- 100)
2-Fluorobiphenyl	69.8	(45.- 105)
2,4,6-Tribromophenol	69.8	(35.- 125)
Terphenyl-d14	65.6	(30.- 125)

(Continued on next page)

Tetra Tech EC, Inc.

Client Sample ID: 04-PE-IR04/72-003

GC/MS Semivolatiles

Lot-Sample #...: F1D010496-003 Work Order #...: MGGM01AF Matrix.....: SOLID

NOTE(S):

Results and reporting limits have been adjusted for dry weight.

Tetra Tech EC, Inc.

Client Sample ID: 04-PE-IR04/72-004

GC/MS Semivolatiles

Lot-Sample #...: F1D010496-004 **Work Order #...:** MGGM11AF **Matrix.....:** SOLID
Date Sampled...: 03/31/11 11:10 **Date Received..:** 04/01/11
Prep Date.....: 04/06/11 **Analysis Date..:** 04/11/11
Prep Batch #...: 1096067 **Analysis Time..:** 20:45
Dilution Factor: 1
% Moisture.....: 17 **Method.....:** SW846 8270C

PARAMETER	RESULT	REPORTING LIMIT	UNITS	MDL
Pyridine	ND	791	ug/kg	79.8
Phenol	ND	395	ug/kg	39.9
bis(2-Chloroethyl)-ether	ND	395	ug/kg	40.0
2-Chlorophenol	ND	395	ug/kg	39.9
1,3-Dichlorobenzene	ND	395	ug/kg	39.9
1,4-Dichlorobenzene	ND	395	ug/kg	39.9
1,2-Dichlorobenzene	ND	395	ug/kg	39.9
2-Methylphenol	ND	395	ug/kg	39.9
3-Methylphenol & 4-Methylphenol	ND	791	ug/kg	79.8
bis(2-Chloroisopropyl) ether	ND	395	ug/kg	39.9
N-Nitrosodi-n-propyl-amine	ND	300	ug/kg	39.9
Hexachloroethane	ND	395	ug/kg	39.9
2-Nitrophenol	ND	395	ug/kg	39.9
2,4-Dimethylphenol	ND	395	ug/kg	39.9
Nitrobenzene	ND	395	ug/kg	39.9
bis(2-Chloroethoxy) methane	ND	395	ug/kg	39.9
2,4-Dichlorophenol	ND	395	ug/kg	39.9
1,2,4-Trichloro-benzene	ND	395	ug/kg	39.9
Naphthalene	ND	395	ug/kg	39.9
4-Chloroaniline	ND	395	ug/kg	39.9
Hexachlorobutadiene	ND	395	ug/kg	39.9
4-Chloro-3-methylphenol	ND	395	ug/kg	39.9
Hexachlorocyclopenta-diene	ND	1920	ug/kg	395
2,4,6-Trichloro-phenol	ND	395	ug/kg	39.9
2,4,5-Trichloro-phenol	ND	395	ug/kg	39.9
2-Chloronaphthalene	ND	395	ug/kg	39.9
2-Nitroaniline	ND	1920	ug/kg	39.9
Dimethyl phthalate	ND	395	ug/kg	39.9
Acenaphthene	ND	395	ug/kg	39.9

(Continued on next page)

Tetra Tech EC, Inc.

Client Sample ID: 04-PE-IR04/72-004

GC/MS Semivolatiles

Lot-Sample #...: F1D010496-004 Work Order #...: MGGM11AF Matrix.....: SOLID

PARAMETER	RESULT	REPORTING LIMIT	UNITS	MDL
Acenaphthylene	ND	395	ug/kg	39.9
2,6-Dinitrotoluene	ND	395	ug/kg	39.9
3-Nitroaniline	ND	1920	ug/kg	39.9
2,4-Dinitrophenol	ND	1920	ug/kg	395
4-Nitrophenol	ND	1920	ug/kg	395
Dibenz(a,h)anthracene	ND	252	ug/kg	39.9
Dibenzofuran	ND	395	ug/kg	39.9
2,4-Dinitrotoluene	ND	395	ug/kg	39.9
Diethyl phthalate	ND	395	ug/kg	39.9
Fluorene	ND	395	ug/kg	39.9
4-Chlorophenyl phenyl ether	ND	395	ug/kg	39.9
4-Nitroaniline	ND	1920	ug/kg	395
4,6-Dinitro-2-methylphenol	ND	1920	ug/kg	395
N-Nitrosodiphenylamine	ND	395	ug/kg	39.9
Pyrene	ND	395	ug/kg	39.9
4-Bromophenyl phenyl ether	ND	395	ug/kg	39.9
Hexachlorobenzene	ND	395	ug/kg	39.9
Pentachlorophenol	ND	791	ug/kg	395
Phenanthrene	ND	395	ug/kg	39.9
Anthracene	ND	395	ug/kg	39.9
Di-n-butyl phthalate	ND	395	ug/kg	39.9
Fluoranthene	ND	395	ug/kg	39.9
Butyl benzyl phthalate	ND	395	ug/kg	39.9
Benzo(a)anthracene	ND	395	ug/kg	39.9
3,3'-Dichlorobenzidine	ND	1920	ug/kg	39.9
Chrysene	ND	395	ug/kg	39.9
bis(2-Ethylhexyl) phthalate	ND	395	ug/kg	51.9
Di-n-octyl phthalate	ND	395	ug/kg	39.9
Benzo(b)fluoranthene	ND	395	ug/kg	39.9
Benzo(k)fluoranthene	ND	395	ug/kg	39.9
Benzo(a)pyrene	ND	252	ug/kg	39.9
Indeno(1,2,3-cd)pyrene	ND	395	ug/kg	39.9
Benzo(ghi)perylene	ND	395	ug/kg	39.9

SURROGATE	PERCENT RECOVERY	RECOVERY LIMITS
2-Fluorophenol	58.0	(35.- 105)
Phenol-d5	63.6	(40.- 100)
Nitrobenzene-d5	65.9	(35.- 100)
2-Fluorobiphenyl	69.4	(45.- 105)
2,4,6-Tribromophenol	78.5	(35.- 125)
Terphenyl-d14	68.3	(30.- 125)

(Continued on next page)

Tetra Tech EC, Inc.

Client Sample ID: 04-PE-IR04/72-004

GC/MS Semivolatiles

Lot-Sample #...: F1D010496-004 Work Order #...: MGGM11AF Matrix.....: SOLID

NOTE(S):

Results and reporting limits have been adjusted for dry weight.

Tetra Tech EC, Inc.

Client Sample ID: 04-PE-IR04/72-005

GC/MS Semivolatiles

Lot-Sample #...: F1D010496-005 **Work Order #...:** MGGM21AF **Matrix.....:** SOLID
Date Sampled...: 03/31/11 11:15 **Date Received..:** 04/01/11
Prep Date.....: 04/06/11 **Analysis Date..:** 04/11/11
Prep Batch #...: 1096067 **Analysis Time..:** 21:20
Dilution Factor: 1
% Moisture.....: 4.0 **Method.....:** SW846 8270C

PARAMETER	RESULT	REPORTING LIMIT	UNITS	MDL
Pyridine	ND	688	ug/kg	69.4
Phenol	ND	344	ug/kg	34.7
bis(2-Chloroethyl)-ether	ND	344	ug/kg	34.8
2-Chlorophenol	ND	344	ug/kg	34.7
1,3-Dichlorobenzene	ND	344	ug/kg	34.7
1,4-Dichlorobenzene	ND	344	ug/kg	34.7
1,2-Dichlorobenzene	ND	344	ug/kg	34.7
2-Methylphenol	ND	344	ug/kg	34.7
3-Methylphenol & 4-Methylphenol	ND	688	ug/kg	69.4
bis(2-Chloroisopropyl) ether	ND	344	ug/kg	34.7
N-Nitrosodi-n-propyl-amine	ND	260	ug/kg	34.7
Hexachloroethane	ND	344	ug/kg	34.7
2-Nitrophenol	ND	344	ug/kg	34.7
2,4-Dimethylphenol	ND	344	ug/kg	34.7
Nitrobenzene	ND	344	ug/kg	34.7
bis(2-Chloroethoxy) methane	ND	344	ug/kg	34.7
2,4-Dichlorophenol	ND	344	ug/kg	34.7
1,2,4-Trichloro-benzene	ND	344	ug/kg	34.7
Naphthalene	ND	344	ug/kg	34.7
4-Chloroaniline	ND	344	ug/kg	34.7
Hexachlorobutadiene	ND	344	ug/kg	34.7
4-Chloro-3-methylphenol	ND	344	ug/kg	34.7
Hexachlorocyclopenta-diene	ND	1670	ug/kg	344
2,4,6-Trichloro-phenol	ND	344	ug/kg	34.7
2,4,5-Trichloro-phenol	ND	344	ug/kg	34.7
2-Chloronaphthalene	ND	344	ug/kg	34.7
2-Nitroaniline	ND	1670	ug/kg	34.7
Dimethyl phthalate	ND	344	ug/kg	34.7
Acenaphthene	ND	344	ug/kg	34.7

(Continued on next page)

Tetra Tech EC, Inc.

Client Sample ID: 04-PE-IR04/72-005

GC/MS Semivolatiles

Lot-Sample #...: F1D010496-005 Work Order #...: MGGM21AF Matrix.....: SOLID

PARAMETER	RESULT	REPORTING LIMIT	UNITS	MDL
Acenaphthylene	ND	344	ug/kg	34.7
2,6-Dinitrotoluene	ND	344	ug/kg	34.7
3-Nitroaniline	ND	1670	ug/kg	34.7
2,4-Dinitrophenol	ND	1670	ug/kg	344
4-Nitrophenol	ND	1670	ug/kg	344
Dibenz(a,h)anthracene	ND	219	ug/kg	34.7
Dibenzofuran	ND	344	ug/kg	34.7
2,4-Dinitrotoluene	ND	344	ug/kg	34.7
Diethyl phthalate	ND	344	ug/kg	34.7
Fluorene	ND	344	ug/kg	34.7
4-Chlorophenyl phenyl ether	ND	344	ug/kg	34.7
4-Nitroaniline	ND	1670	ug/kg	344
4,6-Dinitro-2-methylphenol	ND	1670	ug/kg	344
N-Nitrosodiphenylamine	ND	344	ug/kg	34.7
Pyrene	ND	344	ug/kg	34.7
4-Bromophenyl phenyl ether	ND	344	ug/kg	34.7
Hexachlorobenzene	ND	344	ug/kg	34.7
Pentachlorophenol	ND	688	ug/kg	344
Phenanthrene	ND	344	ug/kg	34.7
Anthracene	ND	344	ug/kg	34.7
Di-n-butyl phthalate	ND	344	ug/kg	34.7
Fluoranthene	ND	344	ug/kg	34.7
Butyl benzyl phthalate	ND	344	ug/kg	34.7
Benzo(a)anthracene	ND	344	ug/kg	34.7
3,3'-Dichlorobenzidine	ND	1670	ug/kg	34.7
Chrysene	ND	344	ug/kg	34.7
bis(2-Ethylhexyl) phthalate	ND	344	ug/kg	45.1
Di-n-octyl phthalate	ND	344	ug/kg	34.7
Benzo(b)fluoranthene	ND	344	ug/kg	34.7
Benzo(k)fluoranthene	ND	344	ug/kg	34.7
Benzo(a)pyrene	ND	219	ug/kg	34.7
Indeno(1,2,3-cd)pyrene	ND	344	ug/kg	34.7
Benzo(ghi)perylene	ND	344	ug/kg	34.7

SURROGATE	PERCENT RECOVERY	RECOVERY LIMITS
2-Fluorophenol	63.0	(35.- 105)
Phenol-d5	67.0	(40.- 100)
Nitrobenzene-d5	69.1	(35.- 100)
2-Fluorobiphenyl	72.5	(45.- 105)
2,4,6-Tribromophenol	78.0	(35.- 125)
Terphenyl-d14	71.3	(30.- 125)

(Continued on next page)

Tetra Tech EC, Inc.

Client Sample ID: 04-PE-IR04/72-005

GC/MS Semivolatiles

Lot-Sample #...: F1D010496-005 Work Order #...: MGGM21AF Matrix.....: SOLID

NOTE(S):

Results and reporting limits have been adjusted for dry weight.

Tetra Tech EC, Inc.

Client Sample ID: 04-PC-IR57-001

GC/MS Semivolatiles

Lot-Sample #...: F1D010496-006 **Work Order #...:** MGGM41A3 **Matrix.....:** SOLID
Date Sampled...: 03/31/11 11:25 **Date Received..:** 04/01/11
Prep Date.....: 04/06/11 **Analysis Date..:** 04/11/11
Prep Batch #...: 1096067 **Analysis Time..:** 21:54
Dilution Factor: 1
% Moisture.....: 7.5 **Method.....:** SW846 8270C

PARAMETER	RESULT	REPORTING LIMIT	UNITS	MDL
Pyridine	ND	713	ug/kg	72.0
Phenol	ND	357	ug/kg	36.0
bis(2-Chloroethyl)-ether	ND	357	ug/kg	36.1
2-Chlorophenol	ND	357	ug/kg	36.0
1,3-Dichlorobenzene	ND	357	ug/kg	36.0
1,4-Dichlorobenzene	ND	357	ug/kg	36.0
1,2-Dichlorobenzene	ND	357	ug/kg	36.0
2-Methylphenol	ND	357	ug/kg	36.0
3-Methylphenol & 4-Methylphenol	ND	713	ug/kg	72.0
bis(2-Chloroisopropyl) ether	ND	357	ug/kg	36.0
N-Nitrosodi-n-propyl-amine	ND	270	ug/kg	36.0
Hexachloroethane	ND	357	ug/kg	36.0
2-Nitrophenol	ND	357	ug/kg	36.0
2,4-Dimethylphenol	ND	357	ug/kg	36.0
Nitrobenzene	ND	357	ug/kg	36.0
bis(2-Chloroethoxy) methane	ND	357	ug/kg	36.0
2,4-Dichlorophenol	ND	357	ug/kg	36.0
1,2,4-Trichloro-benzene	ND	357	ug/kg	36.0
Naphthalene	ND	357	ug/kg	36.0
4-Chloroaniline	ND	357	ug/kg	36.0
Hexachlorobutadiene	ND	357	ug/kg	36.0
4-Chloro-3-methylphenol	ND	357	ug/kg	36.0
Hexachlorocyclopenta-diene	ND	1730	ug/kg	357
2,4,6-Trichloro-phenol	ND	357	ug/kg	36.0
2,4,5-Trichloro-phenol	ND	357	ug/kg	36.0
2-Chloronaphthalene	ND	357	ug/kg	36.0
2-Nitroaniline	ND	1730	ug/kg	36.0
Dimethyl phthalate	ND	357	ug/kg	36.0
Acenaphthene	**61.5 J**	**357**	**ug/kg**	**36.0**

(Continued on next page)

Tetra Tech EC, Inc.

Client Sample ID: 04-PC-IR57-001

GC/MS Semivolatiles

Lot-Sample #...: F1D010496-006 Work Order #...: MGGM41A3 Matrix.....: SOLID

PARAMETER	RESULT	REPORTING LIMIT	UNITS	MDL
Acenaphthylene	ND	357	ug/kg	36.0
2,6-Dinitrotoluene	ND	357	ug/kg	36.0
3-Nitroaniline	ND	1730	ug/kg	36.0
2,4-Dinitrophenol	ND	1730	ug/kg	357
4-Nitrophenol	ND	1730	ug/kg	357
Dibenz(a,h)anthracene	ND	227	ug/kg	36.0
Dibenzofuran	**40.7 J**	**357**	**ug/kg**	**36.0**
2,4-Dinitrotoluene	ND	357	ug/kg	36.0
Diethyl phthalate	ND	357	ug/kg	36.0
Fluorene	**49.7 J**	**357**	**ug/kg**	**36.0**
4-Chlorophenyl phenyl ether	ND	357	ug/kg	36.0
4-Nitroaniline	ND	1730	ug/kg	357
4,6-Dinitro-2-methylphenol	ND	1730	ug/kg	357
N-Nitrosodiphenylamine	ND	357	ug/kg	36.0
Pyrene	**832**	**357**	**ug/kg**	**36.0**
4-Bromophenyl phenyl ether	ND	357	ug/kg	36.0
Hexachlorobenzene	ND	357	ug/kg	36.0
Pentachlorophenol	ND	713	ug/kg	357
Phenanthrene	**624**	**357**	**ug/kg**	**36.0**
Anthracene	**115 J**	**357**	**ug/kg**	**36.0**
Di-n-butyl phthalate	**39.1 J**	**357**	**ug/kg**	**36.0**
Fluoranthene	**1240**	**357**	**ug/kg**	**36.0**
Butyl benzyl phthalate	ND	357	ug/kg	36.0
Benzo(a)anthracene	**465**	**357**	**ug/kg**	**36.0**
3,3'-Dichlorobenzidine	ND	1730	ug/kg	36.0
Chrysene	**464**	**357**	**ug/kg**	**36.0**
bis(2-Ethylhexyl) phthalate	**5030**	**357**	**ug/kg**	**46.8**
Di-n-octyl phthalate	ND	357	ug/kg	36.0
Benzo(b)fluoranthene	**826**	**357**	**ug/kg**	**36.0**
Benzo(k)fluoranthene	**338 J**	**357**	**ug/kg**	**36.0**
Benzo(a)pyrene	**481**	**227**	**ug/kg**	**36.0**
Indeno(1,2,3-cd)pyrene	**198 J**	**357**	**ug/kg**	**36.0**
Benzo(ghi)perylene	**177 J**	**357**	**ug/kg**	**36.0**

SURROGATE	PERCENT RECOVERY	RECOVERY LIMITS
2-Fluorophenol	61.0	(35.- 105)
Phenol-d5	64.4	(40.- 100)
Nitrobenzene-d5	67.5	(35.- 100)
2-Fluorobiphenyl	67.2	(45.- 105)
2,4,6-Tribromophenol	70.9	(35.- 125)
Terphenyl-d14	70.6	(30.- 125)

(Continued on next page)

Tetra Tech EC, Inc.

Client Sample ID: 04-PC-IR57-001

GC/MS Semivolatiles

Lot-Sample #...: F1D010496-006 Work Order #...: MGGM41A3 Matrix.....: SOLID

NOTE(S):

Results and reporting limits have been adjusted for dry weight.

J Estimated result. Result is less than RL.

Tetra Tech EC, Inc.

Client Sample ID: 04-PC-IR57-002

GC/MS Semivolatiles

Lot-Sample #...: F1D010496-007 **Work Order #...:** MGGNK1A4 **Matrix.....:** SOLID
Date Sampled...: 03/31/11 11:30 **Date Received..:** 04/01/11
Prep Date.....: 04/06/11 **Analysis Date..:** 04/11/11
Prep Batch #...: 1096067 **Analysis Time..:** 22:29
Dilution Factor: 1
% Moisture.....: 13 **Method.....:** SW846 8270C

PARAMETER	RESULT	REPORTING LIMIT	UNITS	MDL
Pyridine	ND	759	ug/kg	76.6
Phenol	ND	379	ug/kg	38.3
bis(2-Chloroethyl)-ether	ND	379	ug/kg	38.4
2-Chlorophenol	ND	379	ug/kg	38.3
1,3-Dichlorobenzene	ND	379	ug/kg	38.3
1,4-Dichlorobenzene	ND	379	ug/kg	38.3
1,2-Dichlorobenzene	ND	379	ug/kg	38.3
2-Methylphenol	ND	379	ug/kg	38.3
3-Methylphenol & 4-Methylphenol	ND	759	ug/kg	76.6
bis(2-Chloroisopropyl) ether	ND	379	ug/kg	38.3
N-Nitrosodi-n-propyl-amine	ND	287	ug/kg	38.3
Hexachloroethane	ND	379	ug/kg	38.3
2-Nitrophenol	ND	379	ug/kg	38.3
2,4-Dimethylphenol	ND	379	ug/kg	38.3
Nitrobenzene	ND	379	ug/kg	38.3
bis(2-Chloroethoxy) methane	ND	379	ug/kg	38.3
2,4-Dichlorophenol	ND	379	ug/kg	38.3
1,2,4-Trichloro-benzene	ND	379	ug/kg	38.3
Naphthalene	ND	379	ug/kg	38.3
4-Chloroaniline	ND	379	ug/kg	38.3
Hexachlorobutadiene	ND	379	ug/kg	38.3
4-Chloro-3-methylphenol	ND	379	ug/kg	38.3
Hexachlorocyclopenta-diene	ND	1840	ug/kg	379
2,4,6-Trichloro-phenol	ND	379	ug/kg	38.3
2,4,5-Trichloro-phenol	ND	379	ug/kg	38.3
2-Chloronaphthalene	ND	379	ug/kg	38.3
2-Nitroaniline	ND	1840	ug/kg	38.3
Dimethyl phthalate	ND	379	ug/kg	38.3
Acenaphthene	ND	379	ug/kg	38.3

(Continued on next page)

Tetra Tech EC, Inc.

Client Sample ID: 04-PC-IR57-002

GC/MS Semivolatiles

Lot-Sample #...: F1D010496-007 Work Order #...: MGGNK1A4 Matrix.....: SOLID

PARAMETER	RESULT	REPORTING LIMIT	UNITS	MDL
Acenaphthylene	ND	379	ug/kg	38.3
2,6-Dinitrotoluene	ND	379	ug/kg	38.3
3-Nitroaniline	ND	1840	ug/kg	38.3
2,4-Dinitrophenol	ND	1840	ug/kg	379
4-Nitrophenol	ND	1840	ug/kg	379
Dibenz(a,h)anthracene	ND	241	ug/kg	38.3
Dibenzofuran	ND	379	ug/kg	38.3
2,4-Dinitrotoluene	ND	379	ug/kg	38.3
Diethyl phthalate	ND	379	ug/kg	38.3
Fluorene	ND	379	ug/kg	38.3
4-Chlorophenyl phenyl ether	ND	379	ug/kg	38.3
4-Nitroaniline	ND	1840	ug/kg	379
4,6-Dinitro-2-methylphenol	ND	1840	ug/kg	379
N-Nitrosodiphenylamine	ND	379	ug/kg	38.3
Pyrene	ND	379	ug/kg	38.3
4-Bromophenyl phenyl ether	ND	379	ug/kg	38.3
Hexachlorobenzene	ND	379	ug/kg	38.3
Pentachlorophenol	ND	759	ug/kg	379
Phenanthrene	ND	379	ug/kg	38.3
Anthracene	ND	379	ug/kg	38.3
Di-n-butyl phthalate	ND	379	ug/kg	38.3
Fluoranthene	ND	379	ug/kg	38.3
Butyl benzyl phthalate	ND	379	ug/kg	38.3
Benzo(a)anthracene	ND	379	ug/kg	38.3
3,3'-Dichlorobenzidine	ND	1840	ug/kg	38.3
Chrysene	ND	379	ug/kg	38.3
bis(2-Ethylhexyl) phthalate	**159 J**	**379**	**ug/kg**	**49.8**
Di-n-octyl phthalate	ND	379	ug/kg	38.3
Benzo(b)fluoranthene	ND	379	ug/kg	38.3
Benzo(k)fluoranthene	ND	379	ug/kg	38.3
Benzo(a)pyrene	ND	241	ug/kg	38.3
Indeno(1,2,3-cd)pyrene	ND	379	ug/kg	38.3
Benzo(ghi)perylene	ND	379	ug/kg	38.3

SURROGATE	PERCENT RECOVERY	RECOVERY LIMITS
2-Fluorophenol	61.5	(35.- 105)
Phenol-d5	67.3	(40.- 100)
Nitrobenzene-d5	66.7	(35.- 100)
2-Fluorobiphenyl	69.7	(45.- 105)
2,4,6-Tribromophenol	81.8	(35.- 125)
Terphenyl-d14	77.2	(30.- 125)

(Continued on next page)

Tetra Tech EC, Inc.

Client Sample ID: 04-PC-IR57-002

GC/MS Semivolatiles

Lot-Sample #...: F1D010496-007 Work Order #...: MGGNK1A4 Matrix.....: SOLID

NOTE(S):

Results and reporting limits have been adjusted for dry weight.

J Estimated result. Result is less than RL.

Tetra Tech EC, Inc.

Client Sample ID: 04-PC-IR57-003

GC/MS Semivolatiles

Lot-Sample #...: F1D010496-008 **Work Order #...:** MGGNL1A4 **Matrix.....:** SOLID
Date Sampled...: 03/31/11 11:35 **Date Received..:** 04/01/11
Prep Date.....: 04/06/11 **Analysis Date..:** 04/11/11
Prep Batch #...: 1096067 **Analysis Time..:** 23:04
Dilution Factor: 1
% Moisture.....: 5.9 **Method.....:** SW846 8270C

PARAMETER	RESULT	REPORTING LIMIT	UNITS	MDL
Pyridine	ND	701	ug/kg	70.7
Phenol	ND	351	ug/kg	35.4
bis(2-Chloroethyl)-ether	ND	351	ug/kg	35.5
2-Chlorophenol	ND	351	ug/kg	35.4
1,3-Dichlorobenzene	ND	351	ug/kg	35.4
1,4-Dichlorobenzene	ND	351	ug/kg	35.4
1,2-Dichlorobenzene	ND	351	ug/kg	35.4
2-Methylphenol	ND	351	ug/kg	35.4
3-Methylphenol & 4-Methylphenol	ND	701	ug/kg	70.7
bis(2-Chloroisopropyl) ether	ND	351	ug/kg	35.4
N-Nitrosodi-n-propyl-amine	ND	266	ug/kg	35.4
Hexachloroethane	ND	351	ug/kg	35.4
2-Nitrophenol	ND	351	ug/kg	35.4
2,4-Dimethylphenol	ND	351	ug/kg	35.4
Nitrobenzene	ND	351	ug/kg	35.4
bis(2-Chloroethoxy) methane	ND	351	ug/kg	35.4
2,4-Dichlorophenol	ND	351	ug/kg	35.4
1,2,4-Trichloro-benzene	ND	351	ug/kg	35.4
Naphthalene	ND	351	ug/kg	35.4
4-Chloroaniline	ND	351	ug/kg	35.4
Hexachlorobutadiene	ND	351	ug/kg	35.4
4-Chloro-3-methylphenol	ND	351	ug/kg	35.4
Hexachlorocyclopenta-diene	ND	1700	ug/kg	351
2,4,6-Trichloro-phenol	ND	351	ug/kg	35.4
2,4,5-Trichloro-phenol	ND	351	ug/kg	35.4
2-Chloronaphthalene	ND	351	ug/kg	35.4
2-Nitroaniline	ND	1700	ug/kg	35.4
Dimethyl phthalate	ND	351	ug/kg	35.4
Acenaphthene	ND	351	ug/kg	35.4

(Continued on next page)

Tetra Tech EC, Inc.

Client Sample ID: 04-PC-IR57-003

GC/MS Semivolatiles

Lot-Sample #...: F1D010496-008 Work Order #...: MGGNL1A4 Matrix.....: SOLID

PARAMETER	RESULT	REPORTING LIMIT	UNITS	MDL
Acenaphthylene	ND	351	ug/kg	35.4
2,6-Dinitrotoluene	ND	351	ug/kg	35.4
3-Nitroaniline	ND	1700	ug/kg	35.4
2,4-Dinitrophenol	ND	1700	ug/kg	351
4-Nitrophenol	ND	1700	ug/kg	351
Dibenz(a,h)anthracene	ND	223	ug/kg	35.4
Dibenzofuran	ND	351	ug/kg	35.4
2,4-Dinitrotoluene	ND	351	ug/kg	35.4
Diethyl phthalate	ND	351	ug/kg	35.4
Fluorene	ND	351	ug/kg	35.4
4-Chlorophenyl phenyl ether	ND	351	ug/kg	35.4
4-Nitroaniline	ND	1700	ug/kg	351
4,6-Dinitro-2-methylphenol	ND	1700	ug/kg	351
N-Nitrosodiphenylamine	ND	351	ug/kg	35.4
Pyrene	**75.8 J**	**351**	**ug/kg**	**35.4**
4-Bromophenyl phenyl ether	ND	351	ug/kg	35.4
Hexachlorobenzene	ND	351	ug/kg	35.4
Pentachlorophenol	ND	701	ug/kg	351
Phenanthrene	**42.0 J**	**351**	**ug/kg**	**35.4**
Anthracene	ND	351	ug/kg	35.4
Di-n-butyl phthalate	ND	351	ug/kg	35.4
Fluoranthene	**81.6 J**	**351**	**ug/kg**	**35.4**
Butyl benzyl phthalate	ND	351	ug/kg	35.4
Benzo(a)anthracene	**48.3 J**	**351**	**ug/kg**	**35.4**
3,3'-Dichlorobenzidine	ND	1700	ug/kg	35.4
Chrysene	**52.4 J**	**351**	**ug/kg**	**35.4**
bis(2-Ethylhexyl) phthalate	**280 J**	**351**	**ug/kg**	**46.0**
Di-n-octyl phthalate	ND	351	ug/kg	35.4
Benzo(b)fluoranthene	**92.0 J**	**351**	**ug/kg**	**35.4**
Benzo(k)fluoranthene	**45.2 J**	**351**	**ug/kg**	**35.4**
Benzo(a)pyrene	**64.1 J**	**223**	**ug/kg**	**35.4**
Indeno(1,2,3-cd)pyrene	ND	351	ug/kg	35.4
Benzo(ghi)perylene	ND	351	ug/kg	35.4

SURROGATE	PERCENT RECOVERY	RECOVERY LIMITS
2-Fluorophenol	70.4	(35.- 105)
Phenol-d5	74.5	(40.- 100)
Nitrobenzene-d5	77.1	(35.- 100)
2-Fluorobiphenyl	77.0	(45.- 105)
2,4,6-Tribromophenol	84.4	(35.- 125)
Terphenyl-d14	92.5	(30.- 125)

(Continued on next page)

Tetra Tech EC, Inc.

Client Sample ID: 04-PC-IR57-003

GC/MS Semivolatiles

Lot-Sample #...: F1D010496-008 Work Order #...: MGGNL1A4 Matrix.....: SOLID

NOTE(S):

Results and reporting limits have been adjusted for dry weight.

J Estimated result. Result is less than RL.

Tetra Tech EC, Inc.

Client Sample ID: 04-PC-IR57-004

GC/MS Semivolatiles

Lot-Sample #...: F1D010496-009 **Work Order #...:** MGGNN1A4 **Matrix.....:** SOLID
Date Sampled...: 03/31/11 11:40 **Date Received..:** 04/01/11
Prep Date.....: 04/06/11 **Analysis Date..:** 04/11/11
Prep Batch #...: 1096067 **Analysis Time..:** 23:39
Dilution Factor: 1
% Moisture.....: 6.1 **Method.....:** SW846 8270C

PARAMETER	RESULT	REPORTING LIMIT	UNITS	MDL
Pyridine	ND	703	ug/kg	70.9
Phenol	ND	352	ug/kg	35.5
bis(2-Chloroethyl)-ether	ND	352	ug/kg	35.6
2-Chlorophenol	ND	352	ug/kg	35.5
1,3-Dichlorobenzene	ND	352	ug/kg	35.5
1,4-Dichlorobenzene	ND	352	ug/kg	35.5
1,2-Dichlorobenzene	ND	352	ug/kg	35.5
2-Methylphenol	ND	352	ug/kg	35.5
3-Methylphenol & 4-Methylphenol	ND	703	ug/kg	70.9
bis(2-Chloroisopropyl) ether	ND	352	ug/kg	35.5
N-Nitrosodi-n-propyl-amine	ND	266	ug/kg	35.5
Hexachloroethane	ND	352	ug/kg	35.5
2-Nitrophenol	ND	352	ug/kg	35.5
2,4-Dimethylphenol	ND	352	ug/kg	35.5
Nitrobenzene	ND	352	ug/kg	35.5
bis(2-Chloroethoxy) methane	ND	352	ug/kg	35.5
2,4-Dichlorophenol	ND	352	ug/kg	35.5
1,2,4-Trichloro-benzene	ND	352	ug/kg	35.5
Naphthalene	ND	352	ug/kg	35.5
4-Chloroaniline	ND	352	ug/kg	35.5
Hexachlorobutadiene	ND	352	ug/kg	35.5
4-Chloro-3-methylphenol	ND	352	ug/kg	35.5
Hexachlorocyclopenta-diene	ND	1700	ug/kg	352
2,4,6-Trichloro-phenol	ND	352	ug/kg	35.5
2,4,5-Trichloro-phenol	ND	352	ug/kg	35.5
2-Chloronaphthalene	ND	352	ug/kg	35.5
2-Nitroaniline	ND	1700	ug/kg	35.5
Dimethyl phthalate	ND	352	ug/kg	35.5
Acenaphthene	ND	352	ug/kg	35.5

(Continued on next page)

Tetra Tech EC, Inc.

Client Sample ID: 04-PC-IR57-004

GC/MS Semivolatiles

Lot-Sample #...: F1D010496-009 Work Order #...: MGGNN1A4 Matrix.....: SOLID

PARAMETER	RESULT	REPORTING LIMIT	UNITS	MDL
Acenaphthylene	ND	352	ug/kg	35.5
2,6-Dinitrotoluene	ND	352	ug/kg	35.5
3-Nitroaniline	ND	1700	ug/kg	35.5
2,4-Dinitrophenol	ND	1700	ug/kg	352
4-Nitrophenol	ND	1700	ug/kg	352
Dibenz(a,h)anthracene	ND	224	ug/kg	35.5
Dibenzofuran	ND	352	ug/kg	35.5
2,4-Dinitrotoluene	ND	352	ug/kg	35.5
Diethyl phthalate	ND	352	ug/kg	35.5
Fluorene	ND	352	ug/kg	35.5
4-Chlorophenyl phenyl ether	ND	352	ug/kg	35.5
4-Nitroaniline	ND	1700	ug/kg	352
4,6-Dinitro-2-methylphenol	ND	1700	ug/kg	352
N-Nitrosodiphenylamine	ND	352	ug/kg	35.5
Pyrene	ND	352	ug/kg	35.5
4-Bromophenyl phenyl ether	ND	352	ug/kg	35.5
Hexachlorobenzene	ND	352	ug/kg	35.5
Pentachlorophenol	ND	703	ug/kg	352
Phenanthrene	ND	352	ug/kg	35.5
Anthracene	ND	352	ug/kg	35.5
Di-n-butyl phthalate	ND	352	ug/kg	35.5
Fluoranthene	ND	352	ug/kg	35.5
Butyl benzyl phthalate	ND	352	ug/kg	35.5
Benzo(a)anthracene	ND	352	ug/kg	35.5
3,3'-Dichlorobenzidine	ND	1700	ug/kg	35.5
Chrysene	ND	352	ug/kg	35.5
bis(2-Ethylhexyl) phthalate	**195 J**	**352**	**ug/kg**	**46.1**
Di-n-octyl phthalate	ND	352	ug/kg	35.5
Benzo(b)fluoranthene	ND	352	ug/kg	35.5
Benzo(k)fluoranthene	ND	352	ug/kg	35.5
Benzo(a)pyrene	ND	224	ug/kg	35.5
Indeno(1,2,3-cd)pyrene	ND	352	ug/kg	35.5
Benzo(ghi)perylene	ND	352	ug/kg	35.5

SURROGATE	PERCENT RECOVERY	RECOVERY LIMITS
2-Fluorophenol	65.5	(35.- 105)
Phenol-d5	71.1	(40.- 100)
Nitrobenzene-d5	70.9	(35.- 100)
2-Fluorobiphenyl	75.0	(45.- 105)
2,4,6-Tribromophenol	86.2	(35.- 125)
Terphenyl-d14	95.1	(30.- 125)

(Continued on next page)

Tetra Tech EC, Inc.

Client Sample ID: 04-PC-IR57-004

GC/MS Semivolatiles

Lot-Sample #...: F1D010496-009 Work Order #...: MGGNN1A4 Matrix.....: SOLID

NOTE(S):

Results and reporting limits have been adjusted for dry weight.

J Estimated result. Result is less than RL.

Tetra Tech EC, Inc.

Client Sample ID: 04-PC-IR57-005

GC/MS Semivolatiles

Lot-Sample #...: F1D010496-010 **Work Order #...:** MGGNP1A4 **Matrix.....:** SOLID
Date Sampled...: 03/31/11 11:50 **Date Received..:** 04/01/11
Prep Date.....: 04/06/11 **Analysis Date..:** 04/12/11
Prep Batch #...: 1096067 **Analysis Time..:** 00:14
Dilution Factor: 1
% Moisture.....: 16 **Method.....:** SW846 8270C

PARAMETER	RESULT	REPORTING LIMIT	UNITS	MDL
Pyridine	ND	783	ug/kg	79.0
Phenol	ND	391	ug/kg	39.5
bis(2-Chloroethyl)-ether	ND	391	ug/kg	39.6
2-Chlorophenol	ND	391	ug/kg	39.5
1,3-Dichlorobenzene	ND	391	ug/kg	39.5
1,4-Dichlorobenzene	ND	391	ug/kg	39.5
1,2-Dichlorobenzene	ND	391	ug/kg	39.5
2-Methylphenol	ND	391	ug/kg	39.5
3-Methylphenol & 4-Methylphenol	ND	783	ug/kg	79.0
bis(2-Chloroisopropyl) ether	ND	391	ug/kg	39.5
N-Nitrosodi-n-propyl-amine	ND	296	ug/kg	39.5
Hexachloroethane	ND	391	ug/kg	39.5
2-Nitrophenol	ND	391	ug/kg	39.5
2,4-Dimethylphenol	ND	391	ug/kg	39.5
Nitrobenzene	ND	391	ug/kg	39.5
bis(2-Chloroethoxy) methane	ND	391	ug/kg	39.5
2,4-Dichlorophenol	ND	391	ug/kg	39.5
1,2,4-Trichloro-benzene	ND	391	ug/kg	39.5
Naphthalene	ND	391	ug/kg	39.5
4-Chloroaniline	ND	391	ug/kg	39.5
Hexachlorobutadiene	ND	391	ug/kg	39.5
4-Chloro-3-methylphenol	ND	391	ug/kg	39.5
Hexachlorocyclopenta-diene	ND	1900	ug/kg	391
2,4,6-Trichloro-phenol	ND	391	ug/kg	39.5
2,4,5-Trichloro-phenol	ND	391	ug/kg	39.5
2-Chloronaphthalene	ND	391	ug/kg	39.5
2-Nitroaniline	ND	1900	ug/kg	39.5
Dimethyl phthalate	ND	391	ug/kg	39.5
Acenaphthene	ND	391	ug/kg	39.5

(Continued on next page)

Tetra Tech EC, Inc.

Client Sample ID: 04-PC-IR57-005

GC/MS Semivolatiles

Lot-Sample #...: F1D010496-010 **Work Order #...:** MGGNP1A4 **Matrix.....:** SOLID

PARAMETER	RESULT	REPORTING LIMIT	UNITS	MDL
Acenaphthylene	ND	391	ug/kg	39.5
2,6-Dinitrotoluene	ND	391	ug/kg	39.5
3-Nitroaniline	ND	1900	ug/kg	39.5
2,4-Dinitrophenol	ND	1900	ug/kg	391
4-Nitrophenol	ND	1900	ug/kg	391
Dibenz(a,h)anthracene	ND	249	ug/kg	39.5
Dibenzofuran	ND	391	ug/kg	39.5
2,4-Dinitrotoluene	ND	391	ug/kg	39.5
Diethyl phthalate	ND	391	ug/kg	39.5
Fluorene	ND	391	ug/kg	39.5
4-Chlorophenyl phenyl ether	ND	391	ug/kg	39.5
4-Nitroaniline	ND	1900	ug/kg	391
4,6-Dinitro-2-methylphenol	ND	1900	ug/kg	391
N-Nitrosodiphenylamine	ND	391	ug/kg	39.5
Pyrene	ND	391	ug/kg	39.5
4-Bromophenyl phenyl ether	ND	391	ug/kg	39.5
Hexachlorobenzene	ND	391	ug/kg	39.5
Pentachlorophenol	ND	783	ug/kg	391
Phenanthrene	ND	391	ug/kg	39.5
Anthracene	ND	391	ug/kg	39.5
Di-n-butyl phthalate	ND	391	ug/kg	39.5
Fluoranthene	ND	391	ug/kg	39.5
Butyl benzyl phthalate	ND	391	ug/kg	39.5
Benzo(a)anthracene	ND	391	ug/kg	39.5
3,3'-Dichlorobenzidine	ND	1900	ug/kg	39.5
Chrysene	ND	391	ug/kg	39.5
bis(2-Ethylhexyl) phthalate	ND	391	ug/kg	51.4
Di-n-octyl phthalate	ND	391	ug/kg	39.5
Benzo(b)fluoranthene	ND	391	ug/kg	39.5
Benzo(k)fluoranthene	ND	391	ug/kg	39.5
Benzo(a)pyrene	ND	249	ug/kg	39.5
Indeno(1,2,3-cd)pyrene	ND	391	ug/kg	39.5
Benzo(ghi)perylene	ND	391	ug/kg	39.5

SURROGATE	PERCENT RECOVERY	RECOVERY LIMITS
2-Fluorophenol	65.9	(35.- 105)
Phenol-d5	69.2	(40.- 100)
Nitrobenzene-d5	72.5	(35.- 100)
2-Fluorobiphenyl	70.1	(45.- 105)
2,4,6-Tribromophenol	86.6	(35.- 125)
Terphenyl-d14	98.2	(30.- 125)

(Continued on next page)

Tetra Tech EC, Inc.

Client Sample ID: 04-PC-IR57-005

GC/MS Semivolatiles

Lot-Sample #...: F1D010496-010 Work Order #...: MGGNP1A4 Matrix.....: SOLID

NOTE(S):

Results and reporting limits have been adjusted for dry weight.

METHOD BLANK REPORT

GC/MS Semivolatiles

Client Lot #...: F1D010496 **Work Order #...:** MGK4P1AA **Matrix.....:** SOLID
MB Lot-Sample #: F1D060000-067

Prep Date.....: 04/06/11 **Analysis Time..:** 14:56
Analysis Date..: 04/11/11 **Prep Batch #...:** 1096067
Dilution Factor: 1

PARAMETER	RESULT	REPORTING LIMIT	UNITS	METHOD
Pyridine	ND	660	ug/kg	SW846 8270C
Phenol	ND	330	ug/kg	SW846 8270C
bis(2-Chloroethyl)-ether	ND	330	ug/kg	SW846 8270C
2-Chlorophenol	ND	330	ug/kg	SW846 8270C
1,3-Dichlorobenzene	ND	330	ug/kg	SW846 8270C
1,4-Dichlorobenzene	ND	330	ug/kg	SW846 8270C
1,2-Dichlorobenzene	ND	330	ug/kg	SW846 8270C
2-Methylphenol	ND	330	ug/kg	SW846 8270C
3-Methylphenol & 4-Methylphenol	ND	660	ug/kg	SW846 8270C
bis(2-Chloroisopropyl) ether	ND	330	ug/kg	SW846 8270C
N-Nitrosodi-n-propyl-amine	ND	250	ug/kg	SW846 8270C
Hexachloroethane	ND	330	ug/kg	SW846 8270C
2-Nitrophenol	ND	330	ug/kg	SW846 8270C
2,4-Dimethylphenol	ND	330	ug/kg	SW846 8270C
Nitrobenzene	ND	330	ug/kg	SW846 8270C
bis(2-Chloroethoxy) methane	ND	330	ug/kg	SW846 8270C
2,4-Dichlorophenol	ND	330	ug/kg	SW846 8270C
1,2,4-Trichloro-benzene	ND	330	ug/kg	SW846 8270C
Naphthalene	ND	330	ug/kg	SW846 8270C
4-Chloroaniline	ND	330	ug/kg	SW846 8270C
Hexachlorobutadiene	ND	330	ug/kg	SW846 8270C
4-Chloro-3-methylphenol	ND	330	ug/kg	SW846 8270C
Hexachlorocyclopenta-diene	ND	1600	ug/kg	SW846 8270C
2,4,6-Trichloro-phenol	ND	330	ug/kg	SW846 8270C
2,4,5-Trichloro-phenol	ND	330	ug/kg	SW846 8270C
2-Chloronaphthalene	ND	330	ug/kg	SW846 8270C
2-Nitroaniline	ND	1600	ug/kg	SW846 8270C
Dimethyl phthalate	ND	330	ug/kg	SW846 8270C
Acenaphthene	ND	330	ug/kg	SW846 8270C
Acenaphthylene	ND	330	ug/kg	SW846 8270C
2,6-Dinitrotoluene	ND	330	ug/kg	SW846 8270C
3-Nitroaniline	ND	1600	ug/kg	SW846 8270C

(Continued on next page)

METHOD BLANK REPORT

GC/MS Semivolatiles

Client Lot #...: F1D010496 **Work Order #...:** MGK4P1AA **Matrix.....:** SOLID

PARAMETER	RESULT	REPORTING LIMIT	UNITS	METHOD
2,4-Dinitrophenol	ND	1600	ug/kg	SW846 8270C
4-Nitrophenol	ND	1600	ug/kg	SW846 8270C
Dibenz(a,h)anthracene	ND	210	ug/kg	SW846 8270C
Dibenzofuran	ND	330	ug/kg	SW846 8270C
2,4-Dinitrotoluene	ND	330	ug/kg	SW846 8270C
Diethyl phthalate	ND	330	ug/kg	SW846 8270C
Fluorene	ND	330	ug/kg	SW846 8270C
4-Chlorophenyl phenyl ether	ND	330	ug/kg	SW846 8270C
4-Nitroaniline	ND	1600	ug/kg	SW846 8270C
4,6-Dinitro-2-methylphenol	ND	1600	ug/kg	SW846 8270C
N-Nitrosodiphenylamine	ND	330	ug/kg	SW846 8270C
Pyrene	ND	330	ug/kg	SW846 8270C
4-Bromophenyl phenyl ether	ND	330	ug/kg	SW846 8270C
Hexachlorobenzene	ND	330	ug/kg	SW846 8270C
Pentachlorophenol	ND	660	ug/kg	SW846 8270C
Phenanthrene	ND	330	ug/kg	SW846 8270C
Anthracene	ND	330	ug/kg	SW846 8270C
Di-n-butyl phthalate	ND	330	ug/kg	SW846 8270C
Fluoranthene	ND	330	ug/kg	SW846 8270C
Butyl benzyl phthalate	ND	330	ug/kg	SW846 8270C
Benzo(a)anthracene	ND	330	ug/kg	SW846 8270C
3,3'-Dichlorobenzidine	ND	1600	ug/kg	SW846 8270C
Chrysene	ND	330	ug/kg	SW846 8270C
bis(2-Ethylhexyl) phthalate	ND	330	ug/kg	SW846 8270C
Di-n-octyl phthalate	ND	330	ug/kg	SW846 8270C
Benzo(b)fluoranthene	ND	330	ug/kg	SW846 8270C
Benzo(k)fluoranthene	ND	330	ug/kg	SW846 8270C
Benzo(a)pyrene	ND	210	ug/kg	SW846 8270C
Indeno(1,2,3-cd)pyrene	ND	330	ug/kg	SW846 8270C
Benzo(ghi)perylene	ND	330	ug/kg	SW846 8270C

SURROGATE	PERCENT RECOVERY	RECOVERY LIMITS
2-Fluorophenol	70.5	(35.0- 105)
Phenol-d5	73.8	(40.0- 100)
Nitrobenzene-d5	79.7	(35.0- 100)
2-Fluorobiphenyl	76.0	(45.0- 105)
2,4,6-Tribromophenol	72.4	(35.0- 125)
Terphenyl-d14	87.4	(30.0- 125)

NOTE(S):

Calculations are performed before rounding to avoid round-off errors in calculated results.

LABORATORY CONTROL SAMPLE EVALUATION REPORT

GC/MS Semivolatiles

Client Lot #...: F1D010496 Work Order #...: MGK4P1AC Matrix.....: SOLID
LCS Lot-Sample#: F1D060000-067
Prep Date.....: 04/06/11 Analysis Date..: 04/11/11
Prep Batch #...: 1096067 Analysis Time..: 15:31
Dilution Factor: 1

PARAMETER	PERCENT RECOVERY	RECOVERY LIMITS	METHOD
Isophorone	70.7	(45.0- 110	SW846 8270C
2-Methylnaphthalene	67.4	(45.0- 105	SW846 8270C
Phenol	65.9	(40.0- 100	SW846 8270C
bis(2-Chloroethyl)-ether	60.2	(40.0- 105	SW846 8270C
2-Chlorophenol	66.5	(45.0- 105	SW846 8270C
1,3-Dichlorobenzene	62.2	(40.0- 100	SW846 8270C
Carbazole	66.9	(45.0- 115	SW846 8270C
1,4-Dichlorobenzene	64.0	(35.0- 105	SW846 8270C
1,2-Dichlorobenzene	63.9	(45.0- 95.	SW846 8270C
2-Methylphenol	65.8	(40.0- 105	SW846 8270C
3-Methylphenol & 4-Methylphenol	68.6	(40.0- 105	SW846 8270C
2,2'-oxybis (1-Chloropropane)	62.2	(20.0- 115	SW846 8270C
N-Nitrosodi-n-propyl-amine	72.7	(40.0- 115	SW846 8270C
Hexachloroethane	66.7	(35.0- 110	SW846 8270C
2-Nitrophenol	67.0	(40.0- 110	SW846 8270C
2,4-Dimethylphenol	73.9	(30.0- 105	SW846 8270C
Nitrobenzene	69.2	(40.0- 115	SW846 8270C
bis(2-Chloroethoxy) methane	67.9	(45.0- 110	SW846 8270C
2,4-Dichlorophenol	71.4	(45.0- 110	SW846 8270C
1,2,4-Trichloro-benzene	75.3	(45.0- 110	SW846 8270C
Naphthalene	66.8	(40.0- 105	SW846 8270C
4-Chloroaniline	50.7	(28.0- 80.	SW846 8270C
Hexachlorobutadiene	83.5	(40.0- 115	SW846 8270C
4-Chloro-3-methylphenol	72.4	(45.0- 115	SW846 8270C
Hexachlorocyclopenta-diene	70.7	(38.0- 107	SW846 8270C
2,4,6-Trichloro-phenol	75.5	(45.0- 110	SW846 8270C

(Continued on next page)

LABORATORY CONTROL SAMPLE EVALUATION REPORT

GC/MS Semivolatiles

Client Lot #....: F1D010496 Work Order #...: MGK4P1AC Matrix.....: SOLID
LCS Lot-Sample#: F1D060000-067

PARAMETER	PERCENT RECOVERY	RECOVERY LIMITS	METHOD
2,4,5-Trichloro-phenol	74.9	(50.0- 110	SW846 8270C
2-Chloronaphthalene	68.9	(45.0- 105	SW846 8270C
2-Nitroaniline	69.1	(45.0- 120	SW846 8270C
Dimethyl phthalate	68.9	(50.0- 110	SW846 8270C
Acenaphthylene	63.6	(45.0- 105	SW846 8270C
Acenaphthene	64.1	(45.0- 110	SW846 8270C
2,6-Dinitrotoluene	70.1	(50.0- 110	SW846 8270C
3-Nitroaniline	45.2	(25.0- 110	SW846 8270C
2,4-Dinitrophenol	47.8	(15.0- 130	SW846 8270C
4-Nitrophenol	78.4	(15.0- 140	SW846 8270C
Dibenzofuran	69.0	(50.0- 105	SW846 8270C
Dibenz(a,h)anthracene	78.5	(40.0- 125	SW846 8270C
2,4-Dinitrotoluene	72.5	(50.0- 115	SW846 8270C
Diethyl phthalate	69.5	(50.0- 115	SW846 8270C
Fluorene	69.9	(50.0- 110	SW846 8270C
4-Chlorophenyl phenyl ether	74.9	(45.0- 110	SW846 8270C
4-Nitroaniline	58.7	(35.0- 115	SW846 8270C
4,6-Dinitro-2-methylphenol	63.2	(30.0- 135	SW846 8270C
N-Nitrosodiphenylamine	89.7	(50.0- 115	SW846 8270C
Pyrene	69.6	(45.0- 125	SW846 8270C
4-Bromophenyl phenyl ether	77.3	(45.0- 115	SW846 8270C
Hexachlorobenzene	77.3	(52.0- 107	SW846 8270C
Pentachlorophenol	80.3	(25.0- 120	SW846 8270C
Phenanthrene	71.1	(50.0- 110	SW846 8270C
Anthracene	71.5	(55.0- 105	SW846 8270C
Di-n-butyl phthalate	69.4	(55.0- 110	SW846 8270C
Fluoranthene	75.3	(55.0- 115	SW846 8270C
Butyl benzyl phthalate	70.1	(50.0- 125	SW846 8270C
Benzo(a)anthracene	75.2	(50.0- 110	SW846 8270C
3,3'-Dichlorobenzidine	46.0	(24.0- 101	SW846 8270C
Chrysene	70.7	(55.0- 110	SW846 8270C
bis(2-Ethylhexyl) phthalate	63.9	(45.0- 125	SW846 8270C

(Continued on next page)

LABORATORY CONTROL SAMPLE EVALUATION REPORT

GC/MS Semivolatiles

Client Lot #...: F1D010496 Work Order #...: MGK4P1AC Matrix.....: SOLID
LCS Lot-Sample#: F1D060000-067

PARAMETER	PERCENT RECOVERY	RECOVERY LIMITS	METHOD
Di-n-octyl phthalate	**65.4**	**(40.0- 130**	**SW846 8270C**
Benzo(b)fluoranthene	**74.2**	**(45.0- 115**	**SW846 8270C**
Benzo(k)fluoranthene	**73.9**	**(45.0- 125**	**SW846 8270C**
Benzo(a)pyrene	**73.1**	**(50.0- 110**	**SW846 8270C**
Indeno(1,2,3-cd)pyrene	**84.0**	**(40.0- 120**	**SW846 8270C**
Benzo(ghi)perylene	**79.1**	**(40.0- 125**	**SW846 8270C**

SURROGATE	PERCENT RECOVERY	RECOVERY LIMITS
2-Fluorophenol	63.9	(35.0- 105
Phenol-d5	67.2	(40.0- 100
Nitrobenzene-d5	71.6	(35.0- 100
2-Fluorobiphenyl	69.9	(45.0- 105
2,4,6-Tribromophenol	81.0	(35.0- 125
Terphenyl-d14	79.7	(30.0- 125

NOTE(S):

Calculations are performed before rounding to avoid round-off errors in calculated results.

Bold print denotes control parameters

MATRIX SPIKE SAMPLE EVALUATION REPORT

GC/MS Semivolatiles

Client Lot #...: F1D010496 Work Order #...: MGGMG1C9-MS Matrix.....: SOLID
MS Lot-Sample #: F1D010496-001 MGGMG1DA-MSD
Date Sampled...: 03/31/11 10:40 Date Received..: 04/01/11
Prep Date.....: 04/06/11 Analysis Date..: 04/11/11
Prep Batch #...: 1096067 Analysis Time..: 18:25
Dilution Factor: 1 % Moisture.....: 4.5

PARAMETER	PERCENT RECOVERY	RECOVERY LIMITS	RPD	RPD LIMITS	METHOD
Isophorone	72.0	(45.0- 110			SW846 8270C
	75.5	(45.0- 110	4.71	(0-30.0)	SW846 8270C
2-Methylnaphthalene	66.0	(45.0- 105			SW846 8270C
	69.8	(45.0- 105	5.39	(0-30.0)	SW846 8270C
Phenol	66.8	(40.0- 100			SW846 8270C
	71.0	(40.0- 100	6.00	(0-30.0)	SW846 8270C
bis(2-Chloroethyl)-ether	59.4	(40.0- 105			SW846 8270C
	63.8	(40.0- 105	7.06	(0-30.0)	SW846 8270C
2-Chlorophenol	66.2	(45.0- 105			SW846 8270C
	71.0	(45.0- 105	6.86	(0-30.0)	SW846 8270C
1,3-Dichlorobenzene	61.6	(40.0- 100			SW846 8270C
	65.8	(40.0- 100	6.68	(0-30.0)	SW846 8270C
Carbazole	68.8	(45.0- 115			SW846 8270C
	70.2	(45.0- 115	1.98	(0-30.0)	SW846 8270C
1,4-Dichlorobenzene	63.1	(35.0- 105			SW846 8270C
	67.6	(35.0- 105	6.97	(0-30.0)	SW846 8270C
1,2-Dichlorobenzene	63.6	(45.0- 95.			SW846 8270C
	67.6	(45.0- 95.	6.08	(0-30.0)	SW846 8270C
2-Methylphenol	66.5	(40.0- 105			SW846 8270C
	71.0	(40.0- 105	6.50	(0-30.0)	SW846 8270C
3-Methylphenol & 4-Methylphenol	70.1	(40.0- 105			SW846 8270C
	73.9	(40.0- 105	5.37	(0-30.0)	SW846 8270C
2,2'-oxybis (1-Chloropropane)	61.5	(20.0- 115			SW846 8270C
	65.5	(20.0- 115	6.23	(0-30.0)	SW846 8270C
N-Nitrosodi-n-propyl-amine	73.0	(40.0- 115			SW846 8270C
	78.0	(40.0- 115	6.63	(0-30.0)	SW846 8270C
Hexachloroethane	65.0	(35.0- 110			SW846 8270C
	68.9	(35.0- 110	5.78	(0-30.0)	SW846 8270C
2-Nitrophenol	69.1	(40.0- 110			SW846 8270C
	73.0	(40.0- 110	5.44	(0-30.0)	SW846 8270C
2,4-Dimethylphenol	78.4	(30.0- 105			SW846 8270C
	82.5	(30.0- 105	5.10	(0-30.0)	SW846 8270C

(Continued on next page)

MATRIX SPIKE SAMPLE EVALUATION REPORT

GC/MS Semivolatiles

Client Lot #...: F1D010496 Work Order #...: MGGMG1C9-MS Matrix.....: SOLID
MS Lot-Sample #: F1D010496-001 MGGMG1DA-MSD

PARAMETER	PERCENT RECOVERY	RECOVERY LIMITS	RPD	RPD LIMITS	METHOD
Nitrobenzene	70.5	(40.0- 115			SW846 8270C
	73.9	(40.0- 115	4.69	(0-30.0)	SW846 8270C
bis(2-Chloroethoxy) methane	69.9	(45.0- 110			SW846 8270C
	73.1	(45.0- 110	4.36	(0-30.0)	SW846 8270C
2,4-Dichlorophenol	75.1	(45.0- 110			SW846 8270C
	78.6	(45.0- 110	4.56	(0-30.0)	SW846 8270C
1,2,4-Trichloro-benzene	74.8	(45.0- 110			SW846 8270C
	77.7	(45.0- 110	3.77	(0-30.0)	SW846 8270C
Naphthalene	65.5	(40.0- 105			SW846 8270C
	68.6	(40.0- 105	4.49	(0-30.0)	SW846 8270C
4-Chloroaniline	51.9	(28.0- 80.			SW846 8270C
	52.0	(28.0- 80.	0.11	(0-30.0)	SW846 8270C
Hexachlorobutadiene	83.3	(40.0- 115			SW846 8270C
	86.1	(40.0- 115	3.29	(0-30.0)	SW846 8270C
4-Chloro-3-methylphenol	75.5	(45.0- 115			SW846 8270C
	78.6	(45.0- 115	3.97	(0-30.0)	SW846 8270C
Hexachlorocyclopenta-diene	55.8	(38.0- 107			SW846 8270C
	56.2	(38.0- 107	0.64	(0-30.0)	SW846 8270C
2,4,6-Trichloro-phenol	79.0	(45.0- 110			SW846 8270C
	80.1	(45.0- 110	1.39	(0-30.0)	SW846 8270C
2,4,5-Trichloro-phenol	76.4	(50.0- 110			SW846 8270C
	79.4	(50.0- 110	3.81	(0-30.0)	SW846 8270C
2-Chloronaphthalene	72.2	(45.0- 105			SW846 8270C
	75.6	(45.0- 105	4.54	(0-30.0)	SW846 8270C
2-Nitroaniline	72.8	(45.0- 120			SW846 8270C
	74.4	(45.0- 120	2.24	(0-30.0)	SW846 8270C
Dimethyl phthalate	71.2	(50.0- 110			SW846 8270C
	73.0	(50.0- 110	2.49	(0-30.0)	SW846 8270C
Acenaphthylene	66.2	(45.0- 105			SW846 8270C
	68.6	(45.0- 105	3.60	(0-30.0)	SW846 8270C
Acenaphthene	64.5	(45.0- 110			SW846 8270C
	66.9	(45.0- 110	3.43	(0-30.0)	SW846 8270C

(Continued on next page)

MATRIX SPIKE SAMPLE EVALUATION REPORT

GC/MS Semivolatiles

Client Lot #...: F1D010496 **Work Order #...:** MGGMG1C9-MS **Matrix.....:** SOLID
MS Lot-Sample #: F1D010496-001 MGGMG1DA-MSD

PARAMETER	PERCENT RECOVERY	RECOVERY LIMITS	RPD	RPD LIMITS	METHOD
2,6-Dinitrotoluene	74.0	(50.0- 110			SW846 8270C
	75.0	(50.0- 110	1.45	(0-30.0)	SW846 8270C
3-Nitroaniline	48.7	(25.0- 110			SW846 8270C
	49.3	(25.0- 110	1.16	(0-30.0)	SW846 8270C
2,4-Dinitrophenol	41.6	(15.0- 130			SW846 8270C
	47.1	(15.0- 130	12.2	(0-30.0)	SW846 8270C
4-Nitrophenol	82.4	(15.0- 140			SW846 8270C
	84.7	(15.0- 140	2.69	(0-30.0)	SW846 8270C
Dibenzofuran	72.0	(50.0- 105			SW846 8270C
	74.5	(50.0- 105	3.35	(0-30.0)	SW846 8270C
Dibenz(a,h)anthracene	80.0	(40.0- 125			SW846 8270C
	70.3	(40.0- 125	13.0	(0-30.0)	SW846 8270C
2,4-Dinitrotoluene	75.1	(50.0- 115			SW846 8270C
	76.2	(50.0- 115	1.42	(0-30.0)	SW846 8270C
Diethyl phthalate	72.2	(50.0- 115			SW846 8270C
	74.4	(50.0- 115	3.06	(0-30.0)	SW846 8270C
Fluorene	71.6	(50.0- 110			SW846 8270C
	73.9	(50.0- 110	3.16	(0-30.0)	SW846 8270C
4-Chlorophenyl phenyl ether	78.2	(45.0- 110			SW846 8270C
	78.9	(45.0- 110	0.87	(0-30.0)	SW846 8270C
4-Nitroaniline	59.5	(35.0- 115			SW846 8270C
	60.2	(35.0- 115	1.15	(0-30.0)	SW846 8270C
4,6-Dinitro-2-methylphenol	61.2	(30.0- 135			SW846 8270C
	67.1	(30.0- 135	9.20	(0-30.0)	SW846 8270C
N-Nitrosodiphenylamine	94.7	(50.0- 115			SW846 8270C
	96.5	(50.0- 115	1.91	(0-30.0)	SW846 8270C
Pyrene	54.8	(45.0- 125			SW846 8270C
	55.2	(45.0- 125	0.54	(0-30.0)	SW846 8270C
4-Bromophenyl phenyl ether	81.6	(45.0- 115			SW846 8270C
	81.6	(45.0- 115	0.03	(0-30.0)	SW846 8270C
Hexachlorobenzene	80.1	(52.0- 107			SW846 8270C
	83.1	(52.0- 107	3.63	(0-30.0)	SW846 8270C
Pentachlorophenol	67.7	(25.0- 120			SW846 8270C
	76.5	(25.0- 120	12.3	(0-30.0)	SW846 8270C
Phenanthrene	59.0	(50.0- 110			SW846 8270C
	61.9	(50.0- 110	3.81	(0-30.0)	SW846 8270C

(Continued on next page)

MATRIX SPIKE SAMPLE EVALUATION REPORT

GC/MS Semivolatiles

Client Lot #...: F1D010496 Work Order #...: MGGMG1C9-MS Matrix.....: SOLID
MS Lot-Sample #: F1D010496-001 MGGMG1DA-MSD

PARAMETER	PERCENT RECOVERY	RECOVERY LIMITS	RPD	RPD LIMITS	METHOD
Anthracene	71.1	(55.0- 105			SW846 8270C
	72.9	(55.0- 105	2.38	(0-30.0)	SW846 8270C
Di-n-butyl phthalate	72.6	(55.0- 110			SW846 8270C
	73.6	(55.0- 110	1.35	(0-30.0)	SW846 8270C
Fluoranthene	64.6	(55.0- 115			SW846 8270C
	66.7	(55.0- 115	2.57	(0-30.0)	SW846 8270C
Butyl benzyl phthalate	70.4	(50.0- 125			SW846 8270C
	70.3	(50.0- 125	0.21	(0-30.0)	SW846 8270C
Benzo(a)anthracene	62.6	(50.0- 110			SW846 8270C
	63.5	(50.0- 110	1.18	(0-30.0)	SW846 8270C
3,3'-Dichlorobenzidine	57.1	(24.0- 101			SW846 8270C
	55.7	(24.0- 101	2.55	(0-30.0)	SW846 8270C
Chrysene	57.0	(55.0- 110			SW846 8270C
	58.8	(55.0- 110	2.49	(0-30.0)	SW846 8270C
bis(2-Ethylhexyl) phthalate	65.8	(45.0- 125			SW846 8270C
	65.9	(45.0- 125	0.13	(0-30.0)	SW846 8270C
Di-n-octyl phthalate	68.9	(40.0- 130			SW846 8270C
	70.0	(40.0- 130	1.51	(0-30.0)	SW846 8270C
Benzo(b)fluoranthene	52.6	(45.0- 115			SW846 8270C
	57.5	(45.0- 115	6.35	(0-30.0)	SW846 8270C
Benzo(k)fluoranthene	65.7	(45.0- 125			SW846 8270C
	65.5	(45.0- 125	0.27	(0-30.0)	SW846 8270C
Benzo(a)pyrene	51.9	(50.0- 110			SW846 8270C
	53.2	(50.0- 110	1.67	(0-30.0)	SW846 8270C
Indeno(1,2,3-cd)pyrene	67.5	(40.0- 120			SW846 8270C
	55.1	(40.0- 120	15.6	(0-30.0)	SW846 8270C
Benzo(ghi)perylene	59.5	(40.0- 125			SW846 8270C
	46.9	(40.0- 125	18.6	(0-30.0)	SW846 8270C

SURROGATE	PERCENT RECOVERY	RECOVERY LIMITS
2-Fluorophenol	63.3	(35.0- 105
	67.4	(35.0- 105
Phenol-d5	68.3	(40.0- 100
	73.0	(40.0- 100
Nitrobenzene-d5	71.8	(35.0- 100
	75.4	(35.0- 100
2-Fluorobiphenyl	71.8	(45.0- 105
	75.1	(45.0- 105

(Continued on next page)

MATRIX SPIKE SAMPLE EVALUATION REPORT

GC/MS Semivolatiles

Client Lot #...: F1D010496 **Work Order #...:** MGGMG1C9-MS **Matrix.....:** SOLID
MS Lot-Sample #: F1D010496-001 MGGMG1DA-MSD

SURROGATE	PERCENT RECOVERY	RECOVERY LIMITS
2,4,6-Tribromophenol	83.7	(35.0- 125
	83.6	(35.0- 125
Terphenyl-d14	80.4	(30.0- 125
	80.6	(30.0- 125

NOTE(S):

Calculations are performed before rounding to avoid round-off errors in calculated results.

Bold print denotes control parameters

Results and reporting limits have been adjusted for dry weight.

Tetra Tech EC, Inc.

Client Sample ID: 04-PE-IR04/72-001

GC Volatiles

Lot-Sample #...:	F1D010496-001	**Work Order #...:**	MGGMG1A1	**Matrix.....:**	SOLID
Date Sampled...:	03/31/11 10:40	**Date Received..:**	04/01/11		
Prep Date.....:	04/05/11	**Analysis Date..:**	04/05/11		
Prep Batch #...:	1095147	**Analysis Time..:**	12:14		
Dilution Factor:	1				
% Moisture.....:	4.5	**Method.....:**	SW846 8015 MOD		

PARAMETER	RESULT	REPORTING LIMIT	UNITS	MDL
Gasoline Range Organics	ND	0.105	mg/kg	0.0105

SURROGATE	PERCENT RECOVERY	RECOVERY LIMITS
Trifluorotoluene	104	(16.- 150)

NOTE(S):

Results and reporting limits have been adjusted for dry weight.

Tetra Tech EC, Inc.

Client Sample ID: 04-PE-IR04/72-002

GC Volatiles

Lot-Sample #...:	F1D010496-002	**Work Order #...:**	MGGMV1AC	**Matrix.....:**	SOLID
Date Sampled...:	03/31/11 10:50	**Date Received..:**	04/01/11		
Prep Date.....:	04/05/11	**Analysis Date..:**	04/05/11		
Prep Batch #...:	1095147	**Analysis Time..:**	13:58		
Dilution Factor:	1				
% Moisture.....:	15	**Method.....:**	SW846 8015 MOD		

PARAMETER	RESULT	REPORTING LIMIT	UNITS	MDL
Gasoline Range Organics	ND	0.118	mg/kg	0.0118

SURROGATE	PERCENT RECOVERY	RECOVERY LIMITS
Trifluorotoluene	74.1	(16.- 150)

NOTE(S):

Results and reporting limits have been adjusted for dry weight.

Tetra Tech EC, Inc.

Client Sample ID: 04-PE-IR04/72-003

GC Volatiles

Lot-Sample #...:	F1D010496-003	**Work Order #...:**	MGGM01AC	**Matrix.....:**	SOLID
Date Sampled...:	03/31/11 11:00	**Date Received..:**	04/01/11		
Prep Date.....:	04/05/11	**Analysis Date..:**	04/05/11		
Prep Batch #...:	1095147	**Analysis Time..:**	14:33		
Dilution Factor:	1				
% Moisture.....:	12	**Method.....:**	SW846 8015 MOD		

PARAMETER	RESULT	REPORTING LIMIT	UNITS	MDL
Gasoline Range Organics	ND	0.114	mg/kg	0.0114

SURROGATE	PERCENT RECOVERY	RECOVERY LIMITS
Trifluorotoluene	42.6	(16.- 150)

NOTE(S):

Results and reporting limits have been adjusted for dry weight.

Tetra Tech EC, Inc.

Client Sample ID: 04-PE-IR04/72-004

GC Volatiles

Lot-Sample #...:	F1D010496-004	**Work Order #...:**	MGGM11AC	**Matrix.....:**	SOLID
Date Sampled...:	03/31/11 11:10	**Date Received..:**	04/01/11		
Prep Date.....:	04/05/11	**Analysis Date..:**	04/05/11		
Prep Batch #...:	1095147	**Analysis Time..:**	15:08		
Dilution Factor:	1				
% Moisture.....:	17	**Method.....:**	SW846 8015 MOD		

PARAMETER	RESULT	REPORTING LIMIT	UNITS	MDL
Gasoline Range Organics	ND	0.120	mg/kg	0.0120

SURROGATE	PERCENT RECOVERY	RECOVERY LIMITS
Trifluorotoluene	71.5	(16.- 150)

NOTE(S):

Results and reporting limits have been adjusted for dry weight.

Tetra Tech EC, Inc.

Client Sample ID: 04-PE-IR04/72-005

GC Volatiles

Lot-Sample #...:	F1D010496-005	**Work Order #...:**	MGGM21AC	**Matrix.....:**	SOLID
Date Sampled...:	03/31/11 11:15	**Date Received..:**	04/01/11		
Prep Date.....:	04/05/11	**Analysis Date..:**	04/05/11		
Prep Batch #...:	1095147	**Analysis Time..:**	15:43		
Dilution Factor:	1				
% Moisture.....:	4.0	**Method.....:**	SW846 8015 MOD		

PARAMETER	RESULT	REPORTING LIMIT	UNITS	MDL
Gasoline Range Organics	ND	0.104	mg/kg	0.0104

SURROGATE	PERCENT RECOVERY	RECOVERY LIMITS
Trifluorotoluene	65.1	(16.- 150)

NOTE(S):

Results and reporting limits have been adjusted for dry weight.

METHOD BLANK REPORT

GC Volatiles

Client Lot #...: F1D010496 **Work Order #...:** MGJ2G1AA **Matrix.....:** SOLID
MB Lot-Sample #: F1D050000-147

Prep Date.....: 04/05/11 **Analysis Time..:** 11:03
Analysis Date..: 04/05/11 **Prep Batch #...:** 1095147
Dilution Factor: 1

PARAMETER	RESULT	REPORTING LIMIT	UNITS	METHOD
Gasoline Range Organics	ND	0.100	mg/kg	SW846 8015 MOD

SURROGATE	PERCENT RECOVERY	RECOVERY LIMITS
Trifluorotoluene	100	(16.0- 150)

NOTE(S):

Calculations are performed before rounding to avoid round-off errors in calculated results.

LABORATORY CONTROL SAMPLE EVALUATION REPORT

GC Volatiles

Client Lot #...: F1D010496 **Work Order #...:** MGJ2G1AC **Matrix.....:** SOLID
LCS Lot-Sample#: F1D050000-147
Prep Date.....: 04/05/11 **Analysis Date..:** 04/05/11
Prep Batch #...: 1095147 **Analysis Time..:** 11:39
Dilution Factor: 1

PARAMETER	PERCENT RECOVERY	RECOVERY LIMITS	METHOD
Gasoline Range Organics	**97.2**	**(64.0- 133**	**SW846 8015 MOD**

SURROGATE	PERCENT RECOVERY	RECOVERY LIMITS
Trifluorotoluene	106	(57.0- 140

NOTE(S):

Calculations are performed before rounding to avoid round-off errors in calculated results.

Bold print denotes control parameters

MATRIX SPIKE SAMPLE EVALUATION REPORT

GC Volatiles

Client Lot #...:	F1D010496	**Work Order #...:**	MGGMG1C7-MS	**Matrix.....:**	SOLID
MS Lot-Sample #:	F1D010496-001		MGGMG1C8-MSD		
Date Sampled...:	03/31/11 10:40	**Date Received..:**	04/01/11		
Prep Date.....:	04/05/11	**Analysis Date..:**	04/05/11		
Prep Batch #...:	1095147	**Analysis Time..:**	12:49		
Dilution Factor:	1	**% Moisture.....:**	4.5		

PARAMETER	PERCENT RECOVERY	RECOVERY LIMITS	RPD	RPD LIMITS	METHOD
Gasoline Range Organics	**89.7**	**(15.0- 124**			**SW846 8015 MOD**
	85.1	**(15.0- 124**	**8.24**	**(0-30.0)**	**SW846 8015 MOD**

SURROGATE	PERCENT RECOVERY	RECOVERY LIMITS
Trifluorotoluene	99.5	(16.0- 150
	105	(16.0- 150

NOTE(S):

Calculations are performed before rounding to avoid round-off errors in calculated results.

Bold print denotes control parameters

Results and reporting limits have been adjusted for dry weight.

Tetra Tech EC, Inc.

Client Sample ID: 04-PE-IR04/72-001

GC Semivolatiles

Lot-Sample #...:	F1D010496-001	**Work Order #...:**	MGGMG1A2	**Matrix.....:**	SOLID
Date Sampled...:	03/31/11 10:40	**Date Received..:**	04/01/11		
Prep Date.....:	04/06/11	**Analysis Date..:**	04/11/11		
Prep Batch #...:	1096069	**Analysis Time..:**	15:14		
Dilution Factor:	1				
% Moisture.....:	4.5	**Method.....:**	SW846 8015 MOD		

PARAMETER	RESULT	REPORTING LIMIT	UNITS	MDL
Diesel Range Organics	ND	26.2	mg/kg	0.349
Motor Oil Range Organics	**26.2**	**26.2**	**mg/kg**	**0.667**

SURROGATE	PERCENT RECOVERY	RECOVERY LIMITS
o-Terphenyl	82.3	(60.- 121)

NOTE(S):

Results and reporting limits have been adjusted for dry weight.

Tetra Tech EC, Inc.

Client Sample ID: 04-PE-IR04/72-002

GC Semivolatiles

Lot-Sample #...:	F1D010496-002	**Work Order #...:**	MGGMV1AD	**Matrix.....:**	SOLID
Date Sampled...:	03/31/11 10:50	**Date Received..:**	04/01/11		
Prep Date.....:	04/06/11	**Analysis Date..:**	04/11/11		
Prep Batch #...:	1096069	**Analysis Time..:**	16:35		
Dilution Factor:	4				
% Moisture.....:	15	**Method.....:**	SW846 8015 MOD		

PARAMETER	RESULT	REPORTING LIMIT	UNITS	MDL
Diesel Range Organics	ND	118	mg/kg	1.57
Motor Oil Range Organics	**159 D**	**118**	**mg/kg**	**2.99**

SURROGATE	PERCENT RECOVERY	RECOVERY LIMITS
o-Terphenyl	81.2	(60.- 121)

NOTE(S):

Results and reporting limits have been adjusted for dry weight.

D Result was obtained from the analysis of a dilution.

Tetra Tech EC, Inc.

Client Sample ID: 04-PE-IR04/72-003

GC Semivolatiles

Lot-Sample #...:	F1D010496-003	**Work Order #...:**	MGGM01AD	**Matrix.....:**	SOLID
Date Sampled...:	03/31/11 11:00	**Date Received..:**	04/01/11		
Prep Date.....:	04/06/11	**Analysis Date..:**	04/11/11		
Prep Batch #...:	1096069	**Analysis Time..:**	18:23		
Dilution Factor:	10				
% Moisture.....:	12	**Method.....:**	SW846 8015 MOD		

PARAMETER	RESULT	REPORTING LIMIT	UNITS	MDL
Diesel Range Organics	ND	286	mg/kg	3.80
Motor Oil Range Organics	**202 J,D**	**286**	**mg/kg**	**7.28**

SURROGATE	PERCENT RECOVERY	RECOVERY LIMITS
o-Terphenyl	DIL	(60.- 121)

NOTE(S):

DIL The concentration is estimated or not reported due to dilution or the presence of interfering analytes.

Results and reporting limits have been adjusted for dry weight.

J Estimated result. Result is less than RL.

D Result was obtained from the analysis of a dilution.

Tetra Tech EC, Inc.

Client Sample ID: 04-PE-IR04/72-004

GC Semivolatiles

Lot-Sample #...:	F1D010496-004	**Work Order #...:**	MGGM11AD	**Matrix.....:**	SOLID
Date Sampled...:	03/31/11 11:10	**Date Received..:**	04/01/11		
Prep Date.....:	04/06/11	**Analysis Date..:**	04/11/11		
Prep Batch #...:	1096069	**Analysis Time..:**	18:51		
Dilution Factor:	10				
% Moisture.....:	17	**Method.....:**	SW846 8015 MOD		

PARAMETER	RESULT	REPORTING LIMIT	UNITS	MDL
Diesel Range Organics	ND	300	mg/kg	3.99
Motor Oil Range Organics	**349 D**	**300**	**mg/kg**	**7.63**

SURROGATE	PERCENT RECOVERY	RECOVERY LIMITS
o-Terphenyl	DIL	(60.- 121)

NOTE(S):

DIL The concentration is estimated or not reported due to dilution or the presence of interfering analytes.

Results and reporting limits have been adjusted for dry weight.

D Result was obtained from the analysis of a dilution.

Tetra Tech EC, Inc.

Client Sample ID: 04-PE-IR04/72-005

GC Semivolatiles

Lot-Sample #...:	F1D010496-005	**Work Order #...:**	MGGM21AD	**Matrix.....:**	SOLID
Date Sampled...:	03/31/11 11:15	**Date Received..:**	04/01/11		
Prep Date.....:	04/06/11	**Analysis Date..:**	04/11/11		
Prep Batch #...:	1096069	**Analysis Time..:**	19:18		
Dilution Factor:	4				
% Moisture.....:	4.0	**Method.....:**	SW846 8015 MOD		

PARAMETER	RESULT	REPORTING LIMIT	UNITS	MDL
Diesel Range Organics	ND	104	mg/kg	1.39
Motor Oil Range Organics	**74.2 J,D**	**104**	**mg/kg**	**2.65**

SURROGATE	PERCENT RECOVERY	RECOVERY LIMITS
o-Terphenyl	63.1	(60.- 121)

NOTE(S):

Results and reporting limits have been adjusted for dry weight.

J Estimated result. Result is less than RL.

D Result was obtained from the analysis of a dilution.

Tetra Tech EC, Inc.

Client Sample ID: 04-PC-IR57-001

GC Semivolatiles

Lot-Sample #...:	F1D010496-006	**Work Order #...:**	MGGM41A1	**Matrix.....:**	SOLID
Date Sampled...:	03/31/11 11:25	**Date Received..:**	04/01/11		
Prep Date.....:	04/06/11	**Analysis Date..:**	04/11/11		
Prep Batch #...:	1096069	**Analysis Time..:**	19:45		
Dilution Factor:	20				
% Moisture.....:	7.5	**Method.....:**	SW846 8015 MOD		

PARAMETER	RESULT	REPORTING LIMIT	UNITS	MDL
Diesel Range Organics	ND	540	mg/kg	7.20
Motor Oil Range Organics	**932 D**	**540**	**mg/kg**	**13.8**

SURROGATE	PERCENT RECOVERY	RECOVERY LIMITS
o-Terphenyl	DIL	(60.- 121)

NOTE(S):

DIL The concentration is estimated or not reported due to dilution or the presence of interfering analytes.

Results and reporting limits have been adjusted for dry weight.

D Result was obtained from the analysis of a dilution.

Tetra Tech EC, Inc.

Client Sample ID: 04-PC-IR57-002

GC Semivolatiles

Lot-Sample #...:	F1D010496-007	**Work Order #...:**	MGGNK1AC	**Matrix.....:**	SOLID
Date Sampled...:	03/31/11 11:30	**Date Received..:**	04/01/11		
Prep Date.....:	04/06/11	**Analysis Date..:**	04/11/11		
Prep Batch #...:	1096069	**Analysis Time..:**	20:12		
Dilution Factor:	20				
% Moisture.....:	13	**Method.....:**	SW846 8015 MOD		

PARAMETER	RESULT	REPORTING LIMIT	UNITS	MDL
Diesel Range Organics	ND	575	mg/kg	7.66
Motor Oil Range Organics	**176 J,D**	**575**	**mg/kg**	**14.7**

SURROGATE	PERCENT RECOVERY	RECOVERY LIMITS
o-Terphenyl	DIL	(60.- 121)

NOTE(S):

DIL The concentration is estimated or not reported due to dilution or the presence of interfering analytes.

Results and reporting limits have been adjusted for dry weight.

J Estimated result. Result is less than RL.

D Result was obtained from the analysis of a dilution.

Tetra Tech EC, Inc.

Client Sample ID: 04-PC-IR57-003

GC Semivolatiles

Lot-Sample #...:	F1D010496-008	**Work Order #...:**	MGGNL1AG	**Matrix.....:**	SOLID
Date Sampled...:	03/31/11 11:35	**Date Received..:**	04/01/11		
Prep Date.....:	04/06/11	**Analysis Date..:**	04/11/11		
Prep Batch #...:	1096069	**Analysis Time..:**	20:39		
Dilution Factor:	20				
% Moisture.....:	5.9	**Method.....:**	SW846 8015 MOD		

PARAMETER	RESULT	REPORTING LIMIT	UNITS	MDL
Diesel Range Organics	ND	531	mg/kg	7.07
Motor Oil Range Organics	**141 J,D**	**531**	**mg/kg**	**13.5**

SURROGATE	PERCENT RECOVERY	RECOVERY LIMITS
o-Terphenyl	DIL	(60.- 121)

NOTE(S):

DIL The concentration is estimated or not reported due to dilution or the presence of interfering analytes.

Results and reporting limits have been adjusted for dry weight.

J Estimated result. Result is less than RL.

D Result was obtained from the analysis of a dilution.

Tetra Tech EC, Inc.

Client Sample ID: 04-PC-IR57-004

GC Semivolatiles

Lot-Sample #...:	F1D010496-009	**Work Order #...:**	MGGNN1AL	**Matrix.....:**	SOLID
Date Sampled...:	03/31/11 11:40	**Date Received..:**	04/01/11		
Prep Date.....:	04/06/11	**Analysis Date..:**	04/11/11		
Prep Batch #...:	1096069	**Analysis Time..:**	21:05		
Dilution Factor:	4				
% Moisture.....:	6.1	**Method.....:**	SW846 8015 MOD		

PARAMETER	RESULT	REPORTING LIMIT	UNITS	MDL
Diesel Range Organics	ND	107	mg/kg	1.42
Motor Oil Range Organics	**94.3 J,D**	**107**	**mg/kg**	**2.71**

SURROGATE	PERCENT RECOVERY	RECOVERY LIMITS
o-Terphenyl	80.7	(60.- 121)

NOTE(S):

Results and reporting limits have been adjusted for dry weight.

J Estimated result. Result is less than RL.

D Result was obtained from the analysis of a dilution.

Tetra Tech EC, Inc.

Client Sample ID: 04-PC-IR57-005

GC Semivolatiles

Lot-Sample #...:	F1D010496-010	**Work Order #...:**	MGGNP1AL	**Matrix.....:**	SOLID
Date Sampled...:	03/31/11 11:50	**Date Received..:**	04/01/11		
Prep Date.....:	04/06/11	**Analysis Date..:**	04/11/11		
Prep Batch #...:	1096069	**Analysis Time..:**	21:33		
Dilution Factor:	4				
% Moisture.....:	16	**Method.....:**	SW846 8015 MOD		

PARAMETER	RESULT	REPORTING LIMIT	UNITS	MDL
Diesel Range Organics	ND	119	mg/kg	1.58
Motor Oil Range Organics	**28.5 J,D**	**119**	**mg/kg**	**3.02**

SURROGATE	PERCENT RECOVERY	RECOVERY LIMITS
o-Terphenyl	71.2	(60.- 121)

NOTE(S):

Results and reporting limits have been adjusted for dry weight.

J Estimated result. Result is less than RL.

D Result was obtained from the analysis of a dilution.

METHOD BLANK REPORT

GC Semivolatiles

Client Lot #...: F1D010496 **Work Order #...:** MGK4W1AA **Matrix.....:** SOLID
MB Lot-Sample #: F1D060000-069

Prep Date.....: 04/06/11 **Analysis Time..:** 14:20
Analysis Date..: 04/11/11 **Prep Batch #...:** 1096069
Dilution Factor: 1

PARAMETER	RESULT	REPORTING LIMIT	UNITS	METHOD
Diesel Range Organics	ND	25.0	mg/kg	SW846 8015 MOD
Motor Oil Range Organics	ND	25.0	mg/kg	SW846 8015 MOD

SURROGATE	PERCENT RECOVERY	RECOVERY LIMITS
o-Terphenyl	83.3	(60.0- 121)

NOTE(S):

Calculations are performed before rounding to avoid round-off errors in calculated results.

LABORATORY CONTROL SAMPLE EVALUATION REPORT

GC Semivolatiles

Client Lot #...: F1D010496 **Work Order #...:** MGK4W1AC **Matrix.....:** SOLID
LCS Lot-Sample#: F1D060000-069
Prep Date.....: 04/06/11 **Analysis Date..:** 04/11/11
Prep Batch #...: 1096069 **Analysis Time..:** 14:47
Dilution Factor: 1

PARAMETER	PERCENT RECOVERY	RECOVERY LIMITS	METHOD
Diesel Range Organics	**76.3**	**(47.0- 104**	**SW846 8015 MOD**

SURROGATE	PERCENT RECOVERY	RECOVERY LIMITS
o-Terphenyl	87.9	(63.0- 117

NOTE(S):

Calculations are performed before rounding to avoid round-off errors in calculated results.

Bold print denotes control parameters

MATRIX SPIKE SAMPLE EVALUATION REPORT

GC Semivolatiles

Client Lot #...:	F1D010496	**Work Order #...:**	MGGMG1DC-MS	**Matrix.....:**	SOLID
MS Lot-Sample #:	F1D010496-001		MGGMG1DD-MSD		
Date Sampled...:	03/31/11 10:40	**Date Received..:**	04/01/11		
Prep Date.....:	04/06/11	**Analysis Date..:**	04/11/11		
Prep Batch #...:	1096069	**Analysis Time..:**	15:41		
Dilution Factor:	1	**% Moisture.....:**	4.5		

PARAMETER	PERCENT RECOVERY	RECOVERY LIMITS	RPD	RPD LIMITS	METHOD
Diesel Range Organics	**97.7**	**(40.0- 140**			**SW846 8015 MOD**
	91.7	**(40.0- 140**	**6.75**	**(0-30.0)**	**SW846 8015 MOD**

SURROGATE	PERCENT RECOVERY	RECOVERY LIMITS
o-Terphenyl	95.8	(60.0- 121
	92.7	(60.0- 121

NOTE(S):

Calculations are performed before rounding to avoid round-off errors in calculated results.

Bold print denotes control parameters

Results and reporting limits have been adjusted for dry weight.

Tetra Tech EC, Inc.

Client Sample ID: 04-PE-IR04/72-001

GC Semivolatiles

Lot-Sample #...: F1D010496-001 **Work Order #...:** MGGMG1A3 **Matrix.....:** SOLID
Date Sampled...: 03/31/11 10:40 **Date Received..:** 04/01/11
Prep Date.....: 04/06/11 **Analysis Date..:** 04/08/11
Prep Batch #...: 1096070 **Analysis Time..:** 21:13
Dilution Factor: 1
% Moisture.....: 4.5 **Method.....:** SW846 8082

PARAMETER	RESULT	REPORTING LIMIT	UNITS	MDL
Aroclor 1016	ND	34.6	ug/kg	5.64
Aroclor 1221	ND	34.6	ug/kg	5.64
Aroclor 1232	ND	34.6	ug/kg	5.64
Aroclor 1242	ND	34.6	ug/kg	5.64
Aroclor 1248	ND	34.6	ug/kg	5.64
Aroclor 1254	ND	34.6	ug/kg	6.42
Aroclor 1260	**86.1**	**34.6**	**ug/kg**	**6.42**

SURROGATE	PERCENT RECOVERY	RECOVERY LIMITS
Decachlorobiphenyl	119	(60.- 125)

NOTE(S):

Results and reporting limits have been adjusted for dry weight.

Tetra Tech EC, Inc.

Client Sample ID: 04-PE-IR04/72-002

GC Semivolatiles

Lot-Sample #...:	F1D010496-002	**Work Order #...:**	MGGMV1AE	**Matrix.....:**	SOLID
Date Sampled...:	03/31/11 10:50	**Date Received..:**	04/01/11		
Prep Date.....:	04/06/11	**Analysis Date..:**	04/08/11		
Prep Batch #...:	1096070	**Analysis Time..:**	22:10		
Dilution Factor:	1				
% Moisture.....:	15	**Method.....:**	SW846 8082		

PARAMETER	RESULT	REPORTING LIMIT	UNITS	MDL
Aroclor 1016	ND	38.8	ug/kg	6.33
Aroclor 1221	ND	38.8	ug/kg	6.33
Aroclor 1232	ND	38.8	ug/kg	6.33
Aroclor 1242	ND	38.8	ug/kg	6.33
Aroclor 1248	ND	38.8	ug/kg	6.33
Aroclor 1254	ND	38.8	ug/kg	7.20
Aroclor 1260	**875**	**38.8**	**ug/kg**	**7.20**

SURROGATE	PERCENT RECOVERY	RECOVERY LIMITS
Decachlorobiphenyl	134 *	(60.- 125)

NOTE(S):

* Surrogate recovery is outside stated control limits.

Results and reporting limits have been adjusted for dry weight.

Tetra Tech EC, Inc.

Client Sample ID: 04-PE-IR04/72-003

GC Semivolatiles

Lot-Sample #...:	F1D010496-003	**Work Order #...:**	MGGM01AE	**Matrix.....:**	SOLID
Date Sampled...:	03/31/11 11:00	**Date Received..:**	04/01/11		
Prep Date.....:	04/06/11	**Analysis Date..:**	04/08/11		
Prep Batch #...:	1096070	**Analysis Time..:**	22:29		
Dilution Factor:	1				
% Moisture.....:	12	**Method.....:**	SW846 8082		

PARAMETER	RESULT	REPORTING LIMIT	UNITS	MDL
Aroclor 1016	ND	37.7	ug/kg	6.16
Aroclor 1221	ND	37.7	ug/kg	6.16
Aroclor 1232	ND	37.7	ug/kg	6.16
Aroclor 1242	ND	37.7	ug/kg	6.16
Aroclor 1248	ND	37.7	ug/kg	6.16
Aroclor 1254	ND	37.7	ug/kg	7.00

SURROGATE	PERCENT RECOVERY	RECOVERY LIMITS
Decachlorobiphenyl	158 *	(60.- 125)

NOTE(S):

* Surrogate recovery is outside stated control limits.

Results and reporting limits have been adjusted for dry weight.

Tetra Tech EC, Inc.

Client Sample ID: 04-PE-IR04/72-003

GC Semivolatiles

Lot-Sample #...:	F1D010496-003	Work Order #...:	MGGM02AE	Matrix.....:	SOLID
Date Sampled...:	03/31/11 11:00	Date Received..:	04/01/11		
Prep Date.....:	04/06/11	Analysis Date..:	04/11/11		
Prep Batch #...:	1096070	Analysis Time..:	11:19		
Dilution Factor:	20				
% Moisture.....:	12	Method.....:	SW846 8082		

PARAMETER	RESULT	REPORTING LIMIT	UNITS	MDL
Aroclor 1260	12200 D	754	ug/kg	140

SURROGATE	PERCENT RECOVERY	RECOVERY LIMITS
Decachlorobiphenyl	DIL	(60.- 125)

NOTE(S):

DIL The concentration is estimated or not reported due to dilution or the presence of interfering analytes.

Results and reporting limits have been adjusted for dry weight.

D Result was obtained from the analysis of a dilution.

Tetra Tech EC, Inc.

Client Sample ID: 04-PE-IR04/72-004

GC Semivolatiles

Lot-Sample #...:	F1D010496-004	**Work Order #...:**	MGGM11AE	**Matrix.....:**	SOLID
Date Sampled...:	03/31/11 11:10	**Date Received..:**	04/01/11		
Prep Date.....:	04/06/11	**Analysis Date..:**	04/08/11		
Prep Batch #...:	1096070	**Analysis Time..:**	22:48		
Dilution Factor:	1				
% Moisture.....:	17	**Method.....:**	SW846 8082		

PARAMETER	RESULT	REPORTING LIMIT	UNITS	MDL
Aroclor 1016	ND	39.5	ug/kg	6.46
Aroclor 1221	ND	39.5	ug/kg	6.46
Aroclor 1232	ND	39.5	ug/kg	6.46
Aroclor 1242	ND	39.5	ug/kg	6.46
Aroclor 1248	ND	39.5	ug/kg	6.46
Aroclor 1254	ND	39.5	ug/kg	7.34

SURROGATE	PERCENT RECOVERY	RECOVERY LIMITS
Decachlorobiphenyl	215 *	(60.- 125)

NOTE(S):

* Surrogate recovery is outside stated control limits.

Results and reporting limits have been adjusted for dry weight.

Tetra Tech EC, Inc.

Client Sample ID: 04-PE-IR04/72-004

GC Semivolatiles

Lot-Sample #...:	F1D010496-004	Work Order #...:	MGGM12AE	Matrix.....:	SOLID
Date Sampled...:	03/31/11 11:10	Date Received..:	04/01/11		
Prep Date.....:	04/06/11	Analysis Date..:	04/11/11		
Prep Batch #...:	1096070	Analysis Time..:	11:38		
Dilution Factor:	20				
% Moisture.....:	17	Method.....:	SW846 8082		

PARAMETER	RESULT	REPORTING LIMIT	UNITS	MDL
Aroclor 1260	386 J,D	791	ug/kg	147

SURROGATE	PERCENT RECOVERY	RECOVERY LIMITS
Decachlorobiphenyl	DIL	(60.- 125)

NOTE(S):

DIL The concentration is estimated or not reported due to dilution or the presence of interfering analytes.

Results and reporting limits have been adjusted for dry weight.

J Estimated result. Result is less than RL.

D Result was obtained from the analysis of a dilution.

Tetra Tech EC, Inc.

Client Sample ID: 04-PE-IR04/72-005

GC Semivolatiles

Lot-Sample #...: F1D010496-005 **Work Order #...:** MGGM21AE **Matrix.....:** SOLID
Date Sampled...: 03/31/11 11:15 **Date Received..:** 04/01/11
Prep Date.....: 04/06/11 **Analysis Date..:** 04/08/11
Prep Batch #...: 1096070 **Analysis Time..:** 23:07
Dilution Factor: 1
% Moisture.....: 4.0 **Method.....:** SW846 8082

PARAMETER	RESULT	REPORTING LIMIT	UNITS	MDL
Aroclor 1016	ND	34.4	ug/kg	5.62
Aroclor 1221	ND	34.4	ug/kg	5.62
Aroclor 1232	ND	34.4	ug/kg	5.62
Aroclor 1242	ND	34.4	ug/kg	5.62
Aroclor 1248	ND	34.4	ug/kg	5.62
Aroclor 1254	ND	34.4	ug/kg	6.39
Aroclor 1260	**117**	**34.4**	**ug/kg**	**6.39**

SURROGATE	PERCENT RECOVERY	RECOVERY LIMITS
Decachlorobiphenyl	84.2	(60.- 125)

NOTE(S):

Results and reporting limits have been adjusted for dry weight.

Tetra Tech EC, Inc.

Client Sample ID: 04-PC-IR57-001

GC Semivolatiles

Lot-Sample #...: F1D010496-006 **Work Order #...:** MGGM41A2 **Matrix.....:** SOLID
Date Sampled...: 03/31/11 11:25 **Date Received..:** 04/01/11
Prep Date.....: 04/06/11 **Analysis Date..:** 04/08/11
Prep Batch #...: 1096070 **Analysis Time..:** 23:25
Dilution Factor: 1
% Moisture.....: 7.5 **Method.....:** SW846 8082

PARAMETER	RESULT	REPORTING LIMIT	UNITS	MDL
Aroclor 1016	ND	35.7	ug/kg	5.83
Aroclor 1221	ND	35.7	ug/kg	5.83
Aroclor 1232	ND	35.7	ug/kg	5.83
Aroclor 1242	ND	35.7	ug/kg	5.83
Aroclor 1248	ND	35.7	ug/kg	5.83
Aroclor 1254	**505**	**35.7**	**ug/kg**	**6.62**
Aroclor 1260	**218**	**35.7**	**ug/kg**	**6.62**

SURROGATE	PERCENT RECOVERY	RECOVERY LIMITS
Decachlorobiphenyl	107	(60.- 125)

NOTE(S):

Results and reporting limits have been adjusted for dry weight.

Tetra Tech EC, Inc.

Client Sample ID: 04-PC-IR57-002

GC Semivolatiles

Lot-Sample #...:	F1D010496-007	**Work Order #...:**	MGGNK1AD	**Matrix.....:**	SOLID
Date Sampled...:	03/31/11 11:30	**Date Received..:**	04/01/11		
Prep Date.....:	04/06/11	**Analysis Date..:**	04/09/11		
Prep Batch #...:	1096070	**Analysis Time..:**	00:03		
Dilution Factor:	1				
% Moisture.....:	13	**Method.....:**	SW846 8082		

PARAMETER	RESULT	REPORTING LIMIT	UNITS	MDL
Aroclor 1248	ND	37.9	ug/kg	6.20
Aroclor 1254	ND	37.9	ug/kg	7.05
Aroclor 1260	ND	37.9	ug/kg	7.05
Aroclor 1016	ND	37.9	ug/kg	6.20
Aroclor 1221	ND	37.9	ug/kg	6.20
Aroclor 1232	ND	37.9	ug/kg	6.20
Aroclor 1242	ND	37.9	ug/kg	6.20

SURROGATE	PERCENT RECOVERY	RECOVERY LIMITS
Decachlorobiphenyl	239 *	(60.- 125)

NOTE(S):

* Surrogate recovery is outside stated control limits.

Results and reporting limits have been adjusted for dry weight.

Tetra Tech EC, Inc.

Client Sample ID: 04-PC-IR57-003

GC Semivolatiles

Lot-Sample #...:	F1D010496-008	**Work Order #...:**	MGGNL1AH	**Matrix.....:**	SOLID
Date Sampled...:	03/31/11 11:35	**Date Received..:**	04/01/11		
Prep Date.....:	04/06/11	**Analysis Date..:**	04/09/11		
Prep Batch #...:	1096070	**Analysis Time..:**	00:22		
Dilution Factor:	1				
% Moisture.....:	5.9	**Method.....:**	SW846 8082		

PARAMETER	RESULT	REPORTING LIMIT	UNITS	MDL
Aroclor 1248	ND	35.1	ug/kg	5.73
Aroclor 1254	ND	35.1	ug/kg	6.51
Aroclor 1260	ND	35.1	ug/kg	6.51
Aroclor 1016	ND	35.1	ug/kg	5.73
Aroclor 1221	ND	35.1	ug/kg	5.73
Aroclor 1232	ND	35.1	ug/kg	5.73
Aroclor 1242	ND	35.1	ug/kg	5.73

SURROGATE	PERCENT RECOVERY	RECOVERY LIMITS
Decachlorobiphenyl	97.2	(60.- 125)

NOTE(S):

Results and reporting limits have been adjusted for dry weight.

Tetra Tech EC, Inc.

Client Sample ID: 04-PC-IR57-004

GC Semivolatiles

Lot-Sample #...:	F1D010496-009	**Work Order #...:**	MGGNN1AM	**Matrix.....:**	SOLID
Date Sampled...:	03/31/11 11:40	**Date Received..:**	04/01/11		
Prep Date.....:	04/06/11	**Analysis Date..:**	04/09/11		
Prep Batch #...:	1096070	**Analysis Time..:**	00:41		
Dilution Factor:	1				
% Moisture.....:	6.1	**Method.....:**	SW846 8082		

PARAMETER	RESULT	REPORTING LIMIT	UNITS	MDL
Aroclor 1248	ND	35.2	ug/kg	5.74
Aroclor 1254	ND	35.2	ug/kg	6.53
Aroclor 1260	**80.7**	**35.2**	**ug/kg**	**6.53**
Aroclor 1016	ND	35.2	ug/kg	5.74
Aroclor 1221	ND	35.2	ug/kg	5.74
Aroclor 1232	ND	35.2	ug/kg	5.74
Aroclor 1242	ND	35.2	ug/kg	5.74

SURROGATE	PERCENT RECOVERY	RECOVERY LIMITS
Decachlorobiphenyl	104	(60.- 125)

NOTE(S):

Results and reporting limits have been adjusted for dry weight.

Tetra Tech EC, Inc.

Client Sample ID: 04-PC-IR57-005

GC Semivolatiles

Lot-Sample #...: F1D010496-010 **Work Order #...:** MGGNP1AM **Matrix.....:** SOLID
Date Sampled...: 03/31/11 11:50 **Date Received..:** 04/01/11
Prep Date.....: 04/06/11 **Analysis Date..:** 04/09/11
Prep Batch #...: 1096070 **Analysis Time..:** 01:00
Dilution Factor: 1
% Moisture.....: 16 **Method.....:** SW846 8082

PARAMETER	RESULT	REPORTING LIMIT	UNITS	MDL
Aroclor 1248	ND	39.1	ug/kg	6.39
Aroclor 1254	ND	39.1	ug/kg	7.27
Aroclor 1260	ND	39.1	ug/kg	7.27
Aroclor 1016	ND	39.1	ug/kg	6.39
Aroclor 1221	ND	39.1	ug/kg	6.39
Aroclor 1232	ND	39.1	ug/kg	6.39
Aroclor 1242	ND	39.1	ug/kg	6.39

SURROGATE	PERCENT RECOVERY	RECOVERY LIMITS
Decachlorobiphenyl	99.2	(60.- 125)

NOTE(S):

Results and reporting limits have been adjusted for dry weight.

METHOD BLANK REPORT

GC Semivolatiles

Client Lot #...: F1D010496 **Work Order #...:** MGK411AA **Matrix.....:** SOLID
MB Lot-Sample #: F1D060000-070

Prep Date.....: 04/06/11 **Analysis Time..:** 20:36

Analysis Date..: 04/08/11 **Prep Batch #...:** 1096070
Dilution Factor: 1

PARAMETER	RESULT	REPORTING LIMIT	UNITS	METHOD
Aroclor 1016	ND	33.0	ug/kg	SW846 8082
Aroclor 1221	ND	33.0	ug/kg	SW846 8082
Aroclor 1232	ND	33.0	ug/kg	SW846 8082
Aroclor 1242	ND	33.0	ug/kg	SW846 8082
Aroclor 1248	ND	33.0	ug/kg	SW846 8082
Aroclor 1254	ND	33.0	ug/kg	SW846 8082
Aroclor 1260	ND	33.0	ug/kg	SW846 8082

SURROGATE	PERCENT RECOVERY	RECOVERY LIMITS
Decachlorobiphenyl	105	(60.0- 125)

NOTE(S):

Calculations are performed before rounding to avoid round-off errors in calculated results.

LABORATORY CONTROL SAMPLE EVALUATION REPORT

GC Semivolatiles

Client Lot #...: F1D010496 **Work Order #...:** MGK411AC **Matrix.....:** SOLID
LCS Lot-Sample#: F1D060000-070
Prep Date.....: 04/06/11 **Analysis Date..:** 04/08/11
Prep Batch #...: 1096070 **Analysis Time..:** 20:54
Dilution Factor: 1

PARAMETER	PERCENT RECOVERY	RECOVERY LIMITS	METHOD
Aroclor 1016	**106**	**(40.0- 140**	**SW846 8082**
Aroclor 1260	**106**	**(60.0- 130**	**SW846 8082**

SURROGATE	PERCENT RECOVERY	RECOVERY LIMITS
Decachlorobiphenyl	104	(60.0- 125

NOTE(S):

Calculations are performed before rounding to avoid round-off errors in calculated results.

Bold print denotes control parameters

MATRIX SPIKE SAMPLE EVALUATION REPORT

GC Semivolatiles

Client Lot #...: F1D010496 Work Order #...: MGGMG1DE-MS Matrix.....: SOLID
MS Lot-Sample #: F1D010496-001 MGGMG1DF-MSD
Date Sampled...: 03/31/11 10:40 Date Received..: 04/01/11
Prep Date.....: 04/06/11 Analysis Date..: 04/08/11
Prep Batch #...: 1096070 Analysis Time..: 21:32
Dilution Factor: 1 % Moisture.....: 4.5

PARAMETER	PERCENT RECOVERY	RECOVERY LIMITS	RPD	RPD LIMITS	METHOD
Aroclor 1016	**103**	**(40.0- 140**			**SW846 8082**
	103	**(40.0- 140**	**0.29**	**(0-30.0)**	**SW846 8082**
Aroclor 1260	**99.6**	**(60.0- 130**			**SW846 8082**
	93.5	**(60.0- 130**	**4.12**	**(0-30.0)**	**SW846 8082**

SURROGATE	PERCENT RECOVERY	RECOVERY LIMITS
Decachlorobiphenyl	107	(60.0- 125
	108	(60.0- 125

NOTE(S):

Calculations are performed before rounding to avoid round-off errors in calculated results.

Bold print denotes control parameters

Results and reporting limits have been adjusted for dry weight.

Tetra Tech EC, Inc.

Client Sample ID: 04-PE-IR04/72-001

TOTAL Metals

Lot-Sample #...: F1D010496-001 Matrix.....: SOLID
Date Sampled...: 03/31/11 10:40 Date Received..: 04/01/11
% Moisture.....: 4.5

PARAMETER	RESULT	REPORTING LIMIT	UNITS	METHOD	PREPARATION-ANALYSIS DATE	WORK ORDER #
Prep Batch #...: 1094046						
Silver	0.017 B	0.21	mg/kg	SW846 6020	04/04-04/06/11	MGGMG1AF
		Dilution Factor: 1		Analysis Time..: 22:12	MDL.....: 0.0084	
Arsenic	4.8	1	mg/kg	SW846 6020	04/04-04/06/11	MGGMG1AG
		Dilution Factor: 1		Analysis Time..: 22:12	MDL.....: 0.21	
Barium	17.3	2.1	mg/kg	SW846 6020	04/04-04/06/11	MGGMG1AH
		Dilution Factor: 1		Analysis Time..: 22:12	MDL.....: 0.060	
Beryllium	0.15	0.1	mg/kg	SW846 6020	04/04-04/06/11	MGGMG1AJ
		Dilution Factor: 1		Analysis Time..: 22:12	MDL.....: 0.015	
Cadmium	0.052 B	0.063	mg/kg	SW846 6020	04/04-04/06/11	MGGMG1AK
		Dilution Factor: 1		Analysis Time..: 22:12	MDL.....: 0.012	
Cobalt	5.2	0.21	mg/kg	SW846 6020	04/04-04/06/11	MGGMG1AL
		Dilution Factor: 1		Analysis Time..: 22:12	MDL.....: 0.045	
Chromium	34.2	2	mg/kg	SW846 6020	04/04-04/06/11	MGGMG1AM
		Dilution Factor: 1		Analysis Time..: 22:12	MDL.....: 0.32	
Copper	9.5	1	mg/kg	SW846 6020	04/04-04/06/11	MGGMG1AN
		Dilution Factor: 1		Analysis Time..: 22:12	MDL.....: 0.067	
Molybdenum	0.19 B	0.52	mg/kg	SW846 6020	04/04-04/06/11	MGGMG1AP
		Dilution Factor: 1		Analysis Time..: 22:12	MDL.....: 0.081	
Nickel	27.1	0.52	mg/kg	SW846 6020	04/04-04/06/11	MGGMG1AQ
		Dilution Factor: 1		Analysis Time..: 22:12	MDL.....: 0.086	
Lead	5.5	0.31	mg/kg	SW846 6020	04/04-04/06/11	MGGMG1AR
		Dilution Factor: 1		Analysis Time..: 22:12	MDL.....: 0.10	
Antimony	0.26 BN	0.52	mg/kg	SW846 6020	04/04-04/06/11	MGGMG1AT
		Dilution Factor: 1		Analysis Time..: 22:12	MDL.....: 0.17	
Selenium	0.70	0.52	mg/kg	SW846 6020	04/04-04/06/11	MGGMG1AU
		Dilution Factor: 1		Analysis Time..: 22:12	MDL.....: 0.17	

(Continued on next page)

Tetra Tech EC, Inc.

Client Sample ID: 04-PE-IR04/72-001

TOTAL Metals

Lot-Sample #...: F1D010496-001 Matrix.....: SOLID

PARAMETER	RESULT	REPORTING LIMIT	UNITS	METHOD	PREPARATION-ANALYSIS DATE	WORK ORDER #
Thallium	0.21 B	0.47	mg/kg	SW846 6020	04/04-04/06/11	MGGMG1AV
		Dilution Factor: 1		Analysis Time..: 22:12	MDL.....: 0.10	
Vanadium	46.2	1	mg/kg	SW846 6020	04/04-04/06/11	MGGMG1AW
		Dilution Factor: 1		Analysis Time..: 22:12	MDL.....: 0.77	
Zinc	19.9	2.1	mg/kg	SW846 6020	04/04-04/06/11	MGGMG1AX
		Dilution Factor: 1		Analysis Time..: 22:12	MDL.....: 1.4	
Prep Batch #...: 1095108						
Mercury	0.11 N	0.042	mg/kg	SW846 7471A	04/07/11	MGGMG1AD
		Dilution Factor: 1		Analysis Time..: 09:30	MDL.....: 0.012	

NOTE(S):

Results and reporting limits have been adjusted for dry weight.

B Estimated result. Result is less than RL.

N Spiked analyte recovery is outside stated control limits.

Tetra Tech EC, Inc.

Client Sample ID: 04-PE-IR04/72-002

TOTAL Metals

Lot-Sample #...: F1D010496-002 Matrix.....: SOLID
Date Sampled...: 03/31/11 10:50 Date Received..: 04/01/11
% Moisture.....: 15

PARAMETER	RESULT	REPORTING LIMIT	UNITS	METHOD	PREPARATION-ANALYSIS DATE	WORK ORDER #
Prep Batch #...: 1094046						
Silver	0.19 B	0.24	mg/kg	SW846 6020	04/04-04/06/11	MGGMV1AL
		Dilution Factor: 1		Analysis Time..: 22:46	MDL.....: 0.0094	
Arsenic	4.6	1.2	mg/kg	SW846 6020	04/04-04/06/11	MGGMV1AM
		Dilution Factor: 1		Analysis Time..: 22:46	MDL.....: 0.24	
Barium	171	2.4	mg/kg	SW846 6020	04/04-04/06/11	MGGMV1AN
		Dilution Factor: 1		Analysis Time..: 22:46	MDL.....: 0.067	
Beryllium	0.31	0.12	mg/kg	SW846 6020	04/04-04/06/11	MGGMV1AP
		Dilution Factor: 1		Analysis Time..: 22:46	MDL.....: 0.016	
Cadmium	0.42	0.071	mg/kg	SW846 6020	04/04-04/06/11	MGGMV1AQ
		Dilution Factor: 1		Analysis Time..: 22:46	MDL.....: 0.013	
Cobalt	48.8	0.24	mg/kg	SW846 6020	04/04-04/06/11	MGGMV1AR
		Dilution Factor: 1		Analysis Time..: 22:46	MDL.....: 0.051	
Chromium	261	2.2	mg/kg	SW846 6020	04/04-04/06/11	MGGMV1AT
		Dilution Factor: 1		Analysis Time..: 22:46	MDL.....: 0.35	
Copper	91.0	1.2	mg/kg	SW846 6020	04/04-04/06/11	MGGMV1AU
		Dilution Factor: 1		Analysis Time..: 22:46	MDL.....: 0.075	
Molybdenum	0.95	0.59	mg/kg	SW846 6020	04/04-04/06/11	MGGMV1AV
		Dilution Factor: 1		Analysis Time..: 22:46	MDL.....: 0.090	
Nickel	727	1.5	mg/kg	SW846 6020	04/04-04/06/11	MGGMV1AW
		Dilution Factor: 2.5		Analysis Time..: 23:59	MDL.....: 0.24	
Lead	129	0.35	mg/kg	SW846 6020	04/04-04/06/11	MGGMV1AX
		Dilution Factor: 1		Analysis Time..: 22:46	MDL.....: 0.12	
Antimony	2.7 N	0.59	mg/kg	SW846 6020	04/04-04/06/11	MGGMV1A0
		Dilution Factor: 1		Analysis Time..: 22:46	MDL.....: 0.19	
Selenium	0.91	0.59	mg/kg	SW846 6020	04/04-04/06/11	MGGMV1A1
		Dilution Factor: 1		Analysis Time..: 22:46	MDL.....: 0.19	

(Continued on next page)

Tetra Tech EC, Inc.

Client Sample ID: 04-PE-IR04/72-002

TOTAL Metals

Lot-Sample #...: F1D010496-002 Matrix.....: SOLID

PARAMETER	RESULT	REPORTING LIMIT	UNITS	METHOD	PREPARATION-ANALYSIS DATE	WORK ORDER #
Thallium	0.21 B	0.53	mg/kg	SW846 6020	04/04-04/06/11	MGGMV1A2
		Dilution Factor: 1		Analysis Time..: 22:46	MDL.....: 0.12	
Vanadium	71.1	1.2	mg/kg	SW846 6020	04/04-04/06/11	MGGMV1A3
		Dilution Factor: 1		Analysis Time..: 22:46	MDL.....: 0.86	
Zinc	134	2.4	mg/kg	SW846 6020	04/04-04/06/11	MGGMV1A4
		Dilution Factor: 1		Analysis Time..: 22:46	MDL.....: 1.6	
Prep Batch #...: 1095108						
Mercury	1.1 N	0.047	mg/kg	SW846 7471A	04/07/11	MGGMV1AJ
		Dilution Factor: 1		Analysis Time..: 09:39	MDL.....: 0.013	

NOTE(S):

Results and reporting limits have been adjusted for dry weight.

B Estimated result. Result is less than RL.

N Spiked analyte recovery is outside stated control limits.

Tetra Tech EC, Inc.

Client Sample ID: 04-PE-IR04/72-003

TOTAL Metals

Lot-Sample #...: F1D010496-003 Matrix.....: SOLID
Date Sampled...: 03/31/11 11:00 Date Received..: 04/01/11
% Moisture.....: 12

PARAMETER	RESULT	REPORTING LIMIT	UNITS	METHOD	PREPARATION-ANALYSIS DATE	WORK ORDER #
Prep Batch #...: 1094046						
Silver	0.19 B	0.23	mg/kg	SW846 6020	04/04-04/06/11	MGGM01AL
		Dilution Factor: 1		Analysis Time..: 22:52	MDL.....: 0.0091	
Arsenic	4.8	1.1	mg/kg	SW846 6020	04/04-04/06/11	MGGM01AM
		Dilution Factor: 1		Analysis Time..: 22:52	MDL.....: 0.23	
Barium	98.2	2.3	mg/kg	SW846 6020	04/04-04/06/11	MGGM01AN
		Dilution Factor: 1		Analysis Time..: 22:52	MDL.....: 0.065	
Beryllium	0.48	0.11	mg/kg	SW846 6020	04/04-04/06/11	MGGM01AP
		Dilution Factor: 1		Analysis Time..: 22:52	MDL.....: 0.016	
Cadmium	0.37	0.069	mg/kg	SW846 6020	04/04-04/06/11	MGGM01AQ
		Dilution Factor: 1		Analysis Time..: 22:52	MDL.....: 0.013	
Cobalt	36.5	0.23	mg/kg	SW846 6020	04/04-04/06/11	MGGM01AR
		Dilution Factor: 1		Analysis Time..: 22:52	MDL.....: 0.049	
Chromium	209	2.2	mg/kg	SW846 6020	04/04-04/06/11	MGGM01AT
		Dilution Factor: 1		Analysis Time..: 22:52	MDL.....: 0.34	
Copper	222	1.1	mg/kg	SW846 6020	04/04-04/06/11	MGGM01AU
		Dilution Factor: 1		Analysis Time..: 22:52	MDL.....: 0.073	
Molybdenum	0.74	0.57	mg/kg	SW846 6020	04/04-04/06/11	MGGM01AV
		Dilution Factor: 1		Analysis Time..: 22:52	MDL.....: 0.088	
Nickel	577	1.4	mg/kg	SW846 6020	04/04-04/07/11	MGGM01AW
		Dilution Factor: 2.5		Analysis Time..: 00:05	MDL.....: 0.23	
Lead	105	0.34	mg/kg	SW846 6020	04/04-04/06/11	MGGM01AX
		Dilution Factor: 1		Analysis Time..: 22:52	MDL.....: 0.11	
Antimony	1.1 N	0.57	mg/kg	SW846 6020	04/04-04/06/11	MGGM01A0
		Dilution Factor: 1		Analysis Time..: 22:52	MDL.....: 0.19	
Selenium	0.95	0.57	mg/kg	SW846 6020	04/04-04/06/11	MGGM01A1
		Dilution Factor: 1		Analysis Time..: 22:52	MDL.....: 0.18	

(Continued on next page)

Tetra Tech EC, Inc.

Client Sample ID: 04-PE-IR04/72-003

TOTAL Metals

Lot-Sample #...: F1D010496-003 Matrix.....: SOLID

PARAMETER	RESULT	REPORTING LIMIT	UNITS	METHOD	PREPARATION-ANALYSIS DATE	WORK ORDER #
Thallium	0.13 B	0.51	mg/kg	SW846 6020	04/04-04/06/11	MGGM01A2
		Dilution Factor: 1		Analysis Time..: 22:52	MDL.....: 0.11	
Vanadium	66.4	1.1	mg/kg	SW846 6020	04/04-04/06/11	MGGM01A3
		Dilution Factor: 1		Analysis Time..: 22:52	MDL.....: 0.84	
Zinc	133	2.3	mg/kg	SW846 6020	04/04-04/06/11	MGGM01A4
		Dilution Factor: 1		Analysis Time..: 22:52	MDL.....: 1.5	
Prep Batch #...: 1095108						
Mercury	0.69 N	0.046	mg/kg	SW846 7471A	04/07/11	MGGM01AJ
		Dilution Factor: 1		Analysis Time..: 09:41	MDL.....: 0.013	

NOTE(S):

Results and reporting limits have been adjusted for dry weight.

B Estimated result. Result is less than RL.

N Spiked analyte recovery is outside stated control limits.

Tetra Tech EC, Inc.

Client Sample ID: 04-PE-IR04/72-004

TOTAL Metals

Lot-Sample #...: F1D010496-004 Matrix.....: SOLID
Date Sampled...: 03/31/11 11:10 Date Received..: 04/01/11
% Moisture.....: 17

PARAMETER	RESULT	REPORTING LIMIT	UNITS	METHOD	PREPARATION-ANALYSIS DATE	WORK ORDER #
Prep Batch #...: 1094046						
Silver	0.12 B	0.24	mg/kg	SW846 6020	04/04-04/06/11	MGGM11AL
		Dilution Factor: 1		Analysis Time..: 22:59	MDL.....: 0.0096	
Arsenic	4.8	1.2	mg/kg	SW846 6020	04/04-04/06/11	MGGM11AM
		Dilution Factor: 1		Analysis Time..: 22:59	MDL.....: 0.24	
Barium	130	2.4	mg/kg	SW846 6020	04/04-04/06/11	MGGM11AN
		Dilution Factor: 1		Analysis Time..: 22:59	MDL.....: 0.068	
Beryllium	0.50	0.12	mg/kg	SW846 6020	04/04-04/06/11	MGGM11AP
		Dilution Factor: 1		Analysis Time..: 22:59	MDL.....: 0.017	
Cadmium	0.20	0.072	mg/kg	SW846 6020	04/04-04/06/11	MGGM11AQ
		Dilution Factor: 1		Analysis Time..: 22:59	MDL.....: 0.013	
Cobalt	40.6	0.24	mg/kg	SW846 6020	04/04-04/06/11	MGGM11AR
		Dilution Factor: 1		Analysis Time..: 22:59	MDL.....: 0.052	
Chromium	311	2.3	mg/kg	SW846 6020	04/04-04/06/11	MGGM11AT
		Dilution Factor: 1		Analysis Time..: 22:59	MDL.....: 0.36	
Copper	83.4	1.2	mg/kg	SW846 6020	04/04-04/06/11	MGGM11AU
		Dilution Factor: 1		Analysis Time..: 22:59	MDL.....: 0.077	
Molybdenum	0.67	0.6	mg/kg	SW846 6020	04/04-04/06/11	MGGM11AV
		Dilution Factor: 1		Analysis Time..: 22:59	MDL.....: 0.092	
Nickel	838	1.5	mg/kg	SW846 6020	04/04-04/07/11	MGGM11AW
		Dilution Factor: 2.5		Analysis Time..: 00:12	MDL.....: 0.25	
Lead	50.0	0.36	mg/kg	SW846 6020	04/04-04/06/11	MGGM11AX
		Dilution Factor: 1		Analysis Time..: 22:59	MDL.....: 0.12	
Antimony	0.48 BN	0.6	mg/kg	SW846 6020	04/04-04/06/11	MGGM11A0
		Dilution Factor: 1		Analysis Time..: 22:59	MDL.....: 0.20	
Selenium	1.1	0.6	mg/kg	SW846 6020	04/04-04/06/11	MGGM11A1
		Dilution Factor: 1		Analysis Time..: 22:59	MDL.....: 0.19	

(Continued on next page)

Tetra Tech EC, Inc.

Client Sample ID: 04-PE-IR04/72-004

TOTAL Metals

Lot-Sample #...: F1D010496-004 Matrix.....: SOLID

PARAMETER	RESULT	REPORTING LIMIT	UNITS	METHOD	PREPARATION-ANALYSIS DATE	WORK ORDER #
Thallium	0.13 B	0.54	mg/kg	SW846 6020	04/04-04/06/11	MGGM11A2
		Dilution Factor: 1		Analysis Time..: 22:59	MDL.....: 0.12	
Vanadium	69.9	1.2	mg/kg	SW846 6020	04/04-04/06/11	MGGM11A3
		Dilution Factor: 1		Analysis Time..: 22:59	MDL.....: 0.88	
Zinc	97.9	2.4	mg/kg	SW846 6020	04/04-04/06/11	MGGM11A4
		Dilution Factor: 1		Analysis Time..: 22:59	MDL.....: 1.6	
Prep Batch #...: 1095108						
Mercury	2.2 N	0.48	mg/kg	SW846 7471A	04/07-04/08/11	MGGM11AJ
		Dilution Factor: 10		Analysis Time..: 08:13	MDL.....: 0.13	

NOTE(S):

Results and reporting limits have been adjusted for dry weight.

B Estimated result. Result is less than RL.

N Spiked analyte recovery is outside stated control limits.

Tetra Tech EC, Inc.

Client Sample ID: 04-PE-IR04/72-005

TOTAL Metals

Lot-Sample #...: F1D010496-005 Matrix.....: SOLID
Date Sampled...: 03/31/11 11:15 Date Received..: 04/01/11
% Moisture.....: 4.0

PARAMETER	RESULT	REPORTING LIMIT	UNITS	METHOD	PREPARATION-ANALYSIS DATE	WORK ORDER #
Prep Batch #...: 1094046						
Silver	0.14 B	0.21	mg/kg	SW846 6020	04/04-04/06/11	MGGM21AL
		Dilution Factor: 1		Analysis Time..: 23:19	MDL.....: 0.0083	
Arsenic	4.2	1	mg/kg	SW846 6020	04/04-04/06/11	MGGM21AM
		Dilution Factor: 1		Analysis Time..: 23:19	MDL.....: 0.21	
Barium	294	2.1	mg/kg	SW846 6020	04/04-04/06/11	MGGM21AN
		Dilution Factor: 1		Analysis Time..: 23:19	MDL.....: 0.059	
Beryllium	0.47	0.1	mg/kg	SW846 6020	04/04-04/06/11	MGGM21AP
		Dilution Factor: 1		Analysis Time..: 23:19	MDL.....: 0.015	
Cadmium	0.26	0.063	mg/kg	SW846 6020	04/04-04/06/11	MGGM21AQ
		Dilution Factor: 1		Analysis Time..: 23:19	MDL.....: 0.011	
Cobalt	33.9	0.21	mg/kg	SW846 6020	04/04-04/06/11	MGGM21AR
		Dilution Factor: 1		Analysis Time..: 23:19	MDL.....: 0.045	
Chromium	165	2	mg/kg	SW846 6020	04/04-04/06/11	MGGM21AT
		Dilution Factor: 1		Analysis Time..: 23:19	MDL.....: 0.31	
Copper	58.7	1	mg/kg	SW846 6020	04/04-04/06/11	MGGM21AU
		Dilution Factor: 1		Analysis Time..: 23:19	MDL.....: 0.067	
Molybdenum	0.63	0.52	mg/kg	SW846 6020	04/04-04/06/11	MGGM21AV
		Dilution Factor: 1		Analysis Time..: 23:19	MDL.....: 0.080	
Nickel	300	0.52	mg/kg	SW846 6020	04/04-04/06/11	MGGM21AW
		Dilution Factor: 1		Analysis Time..: 23:19	MDL.....: 0.086	
Lead	70.8	0.31	mg/kg	SW846 6020	04/04-04/06/11	MGGM21AX
		Dilution Factor: 1		Analysis Time..: 23:19	MDL.....: 0.10	
Antimony	0.32 BN	0.52	mg/kg	SW846 6020	04/04-04/06/11	MGGM21A0
		Dilution Factor: 1		Analysis Time..: 23:19	MDL.....: 0.17	
Selenium	1.2	0.52	mg/kg	SW846 6020	04/04-04/06/11	MGGM21A1
		Dilution Factor: 1		Analysis Time..: 23:19	MDL.....: 0.16	

(Continued on next page)

Tetra Tech EC, Inc.

Client Sample ID: 04-PE-IR04/72-005

TOTAL Metals

Lot-Sample #...: F1D010496-005 Matrix.....: SOLID

PARAMETER	RESULT	REPORTING LIMIT	UNITS	METHOD	PREPARATION-ANALYSIS DATE	WORK ORDER #
Thallium	0.11 B	0.47	mg/kg	SW846 6020	04/04-04/06/11	MGGM21A2
		Dilution Factor: 1		Analysis Time..: 23:19	MDL.....: 0.10	
Vanadium	79.0	1	mg/kg	SW846 6020	04/04-04/06/11	MGGM21A3
		Dilution Factor: 1		Analysis Time..: 23:19	MDL.....: 0.77	
Zinc	86.0	2.1	mg/kg	SW846 6020	04/04-04/06/11	MGGM21A4
		Dilution Factor: 1		Analysis Time..: 23:19	MDL.....: 1.4	
Prep Batch #...: 1095108						
Mercury	0.51 N	0.042	mg/kg	SW846 7471A	04/07/11	MGGM21AJ
		Dilution Factor: 1		Analysis Time..: 09:46	MDL.....: 0.011	

NOTE(S):

Results and reporting limits have been adjusted for dry weight.

B Estimated result. Result is less than RL.

N Spiked analyte recovery is outside stated control limits.

Tetra Tech EC, Inc.

Client Sample ID: 04-PC-IR57-001

TOTAL Metals

Lot-Sample #...: F1D010496-006 Matrix.....: SOLID
Date Sampled...: 03/31/11 11:25 Date Received..: 04/01/11
% Moisture.....: 7.5

PARAMETER	RESULT	REPORTING LIMIT	UNITS	METHOD	PREPARATION-ANALYSIS DATE	WORK ORDER #
Prep Batch #...: 1094046						
Silver	0.071 B	0.22	mg/kg	SW846 6020	04/04-04/06/11	MGGM41AF
		Dilution Factor: 1		Analysis Time..: 23:26	MDL.....: 0.0086	
Arsenic	3.8	1.1	mg/kg	SW846 6020	04/04-04/06/11	MGGM41AG
		Dilution Factor: 1		Analysis Time..: 23:26	MDL.....: 0.22	
Barium	193	2.2	mg/kg	SW846 6020	04/04-04/06/11	MGGM41AH
		Dilution Factor: 1		Analysis Time..: 23:26	MDL.....: 0.062	
Beryllium	0.12	0.11	mg/kg	SW846 6020	04/04-04/06/11	MGGM41AJ
		Dilution Factor: 1		Analysis Time..: 23:26	MDL.....: 0.015	
Cadmium	0.45	0.065	mg/kg	SW846 6020	04/04-04/06/11	MGGM41AK
		Dilution Factor: 1		Analysis Time..: 23:26	MDL.....: 0.012	
Cobalt	5.1	0.22	mg/kg	SW846 6020	04/04-04/06/11	MGGM41AL
		Dilution Factor: 1		Analysis Time..: 23:26	MDL.....: 0.046	
Chromium	51.4	2.1	mg/kg	SW846 6020	04/04-04/06/11	MGGM41AM
		Dilution Factor: 1		Analysis Time..: 23:26	MDL.....: 0.33	
Copper	605	1.1	mg/kg	SW846 6020	04/04-04/06/11	MGGM41AN
		Dilution Factor: 1		Analysis Time..: 23:26	MDL.....: 0.069	
Molybdenum	0.80	0.54	mg/kg	SW846 6020	04/04-04/06/11	MGGM41AP
		Dilution Factor: 1		Analysis Time..: 23:26	MDL.....: 0.083	
Nickel	24.4	0.54	mg/kg	SW846 6020	04/04-04/06/11	MGGM41AQ
		Dilution Factor: 1		Analysis Time..: 23:26	MDL.....: 0.089	
Lead	140	0.32	mg/kg	SW846 6020	04/04-04/06/11	MGGM41AR
		Dilution Factor: 1		Analysis Time..: 23:26	MDL.....: 0.11	
Antimony	1.5 N	0.54	mg/kg	SW846 6020	04/04-04/06/11	MGGM41AT
		Dilution Factor: 1		Analysis Time..: 23:26	MDL.....: 0.18	
Selenium	0.41 B	0.54	mg/kg	SW846 6020	04/04-04/06/11	MGGM41AU
		Dilution Factor: 1		Analysis Time..: 23:26	MDL.....: 0.17	

(Continued on next page)

Tetra Tech EC, Inc.

Client Sample ID: 04-PC-IR57-001

TOTAL Metals

Lot-Sample #...: F1D010496-006 Matrix.....: SOLID

PARAMETER	RESULT	REPORTING LIMIT	UNITS	METHOD	PREPARATION-ANALYSIS DATE	WORK ORDER #
Thallium	ND	0.49	mg/kg	SW846 6020	04/04-04/06/11	MGGM41AV
		Dilution Factor: 1		Analysis Time..: 23:26	MDL.....: 0.11	
Vanadium	**23.6**	**1.1**	**mg/kg**	**SW846 6020**	**04/04-04/06/11**	**MGGM41AW**
		Dilution Factor: 1		Analysis Time..: 23:26	MDL.....: 0.79	
Zinc	**844**	**2.2**	**mg/kg**	**SW846 6020**	**04/04-04/06/11**	**MGGM41AX**
		Dilution Factor: 1		Analysis Time..: 23:26	MDL.....: 1.4	
Prep Batch #...: 1095108						
Mercury	**0.14 N**	**0.044**	**mg/kg**	**SW846 7471A**	**04/07/11**	**MGGM41AD**
		Dilution Factor: 1		Analysis Time..: 09:53	MDL.....: 0.012	

NOTE(S):

Results and reporting limits have been adjusted for dry weight.

B Estimated result. Result is less than RL.

N Spiked analyte recovery is outside stated control limits.

Tetra Tech EC, Inc.

Client Sample ID: 04-PC-IR57-002

TOTAL Metals

Lot-Sample #...: F1D010496-007 Matrix.....: SOLID
Date Sampled...: 03/31/11 11:30 Date Received..: 04/01/11
% Moisture.....: 13

PARAMETER	RESULT	REPORTING LIMIT	UNITS	METHOD	PREPARATION-ANALYSIS DATE	WORK ORDER #
Prep Batch #...: 1094046						
Silver	0.067 B	0.23	mg/kg	SW846 6020	04/04-04/06/11	MGGNK1AK
		Dilution Factor: 1		Analysis Time..: 23:32	MDL.....: 0.0092	
Arsenic	3.4	1.1	mg/kg	SW846 6020	04/04-04/06/11	MGGNK1AL
		Dilution Factor: 1		Analysis Time..: 23:32	MDL.....: 0.23	
Barium	185	2.3	mg/kg	SW846 6020	04/04-04/06/11	MGGNK1AM
		Dilution Factor: 1		Analysis Time..: 23:32	MDL.....: 0.066	
Beryllium	0.23	0.11	mg/kg	SW846 6020	04/04-04/06/11	MGGNK1AN
		Dilution Factor: 1		Analysis Time..: 23:32	MDL.....: 0.016	
Cadmium	0.94	0.069	mg/kg	SW846 6020	04/04-04/06/11	MGGNK1AP
		Dilution Factor: 1		Analysis Time..: 23:32	MDL.....: 0.013	
Cobalt	39.6	0.23	mg/kg	SW846 6020	04/04-04/06/11	MGGNK1AQ
		Dilution Factor: 1		Analysis Time..: 23:32	MDL.....: 0.049	
Chromium	322	2.2	mg/kg	SW846 6020	04/04-04/06/11	MGGNK1AR
		Dilution Factor: 1		Analysis Time..: 23:32	MDL.....: 0.35	
Copper	80.9	1.1	mg/kg	SW846 6020	04/04-04/06/11	MGGNK1AT
		Dilution Factor: 1		Analysis Time..: 23:32	MDL.....: 0.074	
Molybdenum	1.8	0.57	mg/kg	SW846 6020	04/04-04/06/11	MGGNK1AU
		Dilution Factor: 1		Analysis Time..: 23:32	MDL.....: 0.089	
Nickel	708	1.4	mg/kg	SW846 6020	04/04-04/07/11	MGGNK1AV
		Dilution Factor: 2.5		Analysis Time..: 00:19	MDL.....: 0.24	
Lead	28.9	0.34	mg/kg	SW846 6020	04/04-04/06/11	MGGNK1AW
		Dilution Factor: 1		Analysis Time..: 23:32	MDL.....: 0.11	
Antimony	9.5 N	0.57	mg/kg	SW846 6020	04/04-04/06/11	MGGNK1AX
		Dilution Factor: 1		Analysis Time..: 23:32	MDL.....: 0.19	
Selenium	0.33 B	0.57	mg/kg	SW846 6020	04/04-04/06/11	MGGNK1A0
		Dilution Factor: 1		Analysis Time..: 23:32	MDL.....: 0.18	

(Continued on next page)

Tetra Tech EC, Inc.

Client Sample ID: 04-PC-IR57-002

TOTAL Metals

Lot-Sample #...: F1D010496-007 Matrix.....: SOLID

PARAMETER	RESULT	REPORTING LIMIT	UNITS	METHOD	PREPARATION-ANALYSIS DATE	WORK ORDER #
Thallium	ND	0.52	mg/kg	SW846 6020	04/04-04/06/11	MGGNK1A1
		Dilution Factor: 1		Analysis Time..: 23:32	MDL.....: 0.11	
Vanadium	**45.2**	**1.1**	**mg/kg**	**SW846 6020**	**04/04-04/06/11**	**MGGNK1A2**
		Dilution Factor: 1		Analysis Time..: 23:32	MDL.....: 0.85	
Zinc	**130**	**2.3**	**mg/kg**	**SW846 6020**	**04/04-04/06/11**	**MGGNK1A3**
		Dilution Factor: 1		Analysis Time..: 23:32	MDL.....: 1.5	
Prep Batch #...: 1095108						
Mercury	**0.23 N**	**0.046**	**mg/kg**	**SW846 7471A**	**04/07/11**	**MGGNK1AH**
		Dilution Factor: 1		Analysis Time..: 09:55	MDL.....: 0.013	

NOTE(S):

Results and reporting limits have been adjusted for dry weight.

B Estimated result. Result is less than RL.

N Spiked analyte recovery is outside stated control limits.

Tetra Tech EC, Inc.

Client Sample ID: 04-PC-IR57-003

TOTAL Metals

Lot-Sample #...: F1D010496-008 Matrix.....: SOLID
Date Sampled...: 03/31/11 11:35 Date Received..: 04/01/11
% Moisture.....: 5.9

PARAMETER	RESULT	REPORTING LIMIT	UNITS	METHOD	PREPARATION-ANALYSIS DATE	WORK ORDER #
Prep Batch #...: 1094046						
Silver	0.045 B	0.21	mg/kg	SW846 6020	04/04-04/06/11	MGGNL1AP
		Dilution Factor: 1		Analysis Time..: 23:39	MDL.....: 0.0085	
Arsenic	5.1	1.1	mg/kg	SW846 6020	04/04-04/06/11	MGGNL1AQ
		Dilution Factor: 1		Analysis Time..: 23:39	MDL.....: 0.22	
Barium	144	2.1	mg/kg	SW846 6020	04/04-04/06/11	MGGNL1AR
		Dilution Factor: 1		Analysis Time..: 23:39	MDL.....: 0.061	
Beryllium	0.27	0.11	mg/kg	SW846 6020	04/04-04/06/11	MGGNL1AT
		Dilution Factor: 1		Analysis Time..: 23:39	MDL.....: 0.015	
Cadmium	0.15	0.064	mg/kg	SW846 6020	04/04-04/06/11	MGGNL1AU
		Dilution Factor: 1		Analysis Time..: 23:39	MDL.....: 0.012	
Cobalt	16.5	0.21	mg/kg	SW846 6020	04/04-04/06/11	MGGNL1AV
		Dilution Factor: 1		Analysis Time..: 23:39	MDL.....: 0.046	
Chromium	74.0	2	mg/kg	SW846 6020	04/04-04/06/11	MGGNL1AW
		Dilution Factor: 1		Analysis Time..: 23:39	MDL.....: 0.32	
Copper	76.3	1.1	mg/kg	SW846 6020	04/04-04/06/11	MGGNL1AX
		Dilution Factor: 1		Analysis Time..: 23:39	MDL.....: 0.068	
Molybdenum	0.40 B	0.53	mg/kg	SW846 6020	04/04-04/06/11	MGGNL1A0
		Dilution Factor: 1		Analysis Time..: 23:39	MDL.....: 0.082	
Nickel	123	0.53	mg/kg	SW846 6020	04/04-04/06/11	MGGNL1A1
		Dilution Factor: 1		Analysis Time..: 23:39	MDL.....: 0.087	
Lead	50.1	0.32	mg/kg	SW846 6020	04/04-04/06/11	MGGNL1A2
		Dilution Factor: 1		Analysis Time..: 23:39	MDL.....: 0.11	
Antimony	0.26 BN	0.53	mg/kg	SW846 6020	04/04-04/06/11	MGGNL1A3
		Dilution Factor: 1		Analysis Time..: 23:39	MDL.....: 0.17	
Selenium	1.2	0.53	mg/kg	SW846 6020	04/04-04/06/11	MGGNL1AA
		Dilution Factor: 1		Analysis Time..: 23:39	MDL.....: 0.17	

(Continued on next page)

Tetra Tech EC, Inc.

Client Sample ID: 04-PC-IR57-003

TOTAL Metals

Lot-Sample #...: F1D010496-008 Matrix.....: SOLID

PARAMETER	RESULT	REPORTING LIMIT	UNITS	METHOD	PREPARATION-ANALYSIS DATE	WORK ORDER #
Thallium	ND	0.48	mg/kg	SW846 6020	04/04-04/06/11	MGGNL1AC
		Dilution Factor: 1		Analysis Time..: 23:39	MDL.....: 0.11	
Vanadium	52.8	1.1	mg/kg	SW846 6020	04/04-04/06/11	MGGNL1AD
		Dilution Factor: 1		Analysis Time..: 23:39	MDL.....: 0.78	
Zinc	108	2.1	mg/kg	SW846 6020	04/04-04/06/11	MGGNL1AE
		Dilution Factor: 1		Analysis Time..: 23:39	MDL.....: 1.4	
Prep Batch #...: 1095108						
Mercury	0.29 N	0.043	mg/kg	SW846 7471A	04/07/11	MGGNL1AM
		Dilution Factor: 1		Analysis Time..: 09:57	MDL.....: 0.012	

NOTE(S):

Results and reporting limits have been adjusted for dry weight.

B Estimated result. Result is less than RL.

N Spiked analyte recovery is outside stated control limits.

Tetra Tech EC, Inc.

Client Sample ID: 04-PC-IR57-004

TOTAL Metals

Lot-Sample #...: F1D010496-009 Matrix.....: SOLID
Date Sampled...: 03/31/11 11:40 Date Received..: 04/01/11
% Moisture.....: 6.1

PARAMETER	RESULT	REPORTING LIMIT	UNITS	METHOD	PREPARATION-ANALYSIS DATE	WORK ORDER #
Prep Batch #...: 1094046						
Silver	0.039 B	0.21	mg/kg	SW846 6020	04/04-04/06/11	MGGNN1AU
		Dilution Factor: 1		Analysis Time..: 23:45	MDL.....: 0.0085	
Arsenic	7.8	1.1	mg/kg	SW846 6020	04/04-04/06/11	MGGNN1AV
		Dilution Factor: 1		Analysis Time..: 23:45	MDL.....: 0.22	
Barium	89.4	2.1	mg/kg	SW846 6020	04/04-04/06/11	MGGNN1AW
		Dilution Factor: 1		Analysis Time..: 23:45	MDL.....: 0.061	
Beryllium	0.33	0.11	mg/kg	SW846 6020	04/04-04/06/11	MGGNN1AX
		Dilution Factor: 1		Analysis Time..: 23:45	MDL.....: 0.015	
Cadmium	0.093	0.064	mg/kg	SW846 6020	04/04-04/06/11	MGGNN1A0
		Dilution Factor: 1		Analysis Time..: 23:45	MDL.....: 0.012	
Cobalt	13.9	0.21	mg/kg	SW846 6020	04/04-04/06/11	MGGNN1A1
		Dilution Factor: 1		Analysis Time..: 23:45	MDL.....: 0.046	
Chromium	73.8	2	mg/kg	SW846 6020	04/04-04/06/11	MGGNN1A2
		Dilution Factor: 1		Analysis Time..: 23:45	MDL.....: 0.32	
Copper	31.1	1.1	mg/kg	SW846 6020	04/04-04/06/11	MGGNN1A3
		Dilution Factor: 1		Analysis Time..: 23:45	MDL.....: 0.068	
Molybdenum	0.33 B	0.53	mg/kg	SW846 6020	04/04-04/06/11	MGGNN1AA
		Dilution Factor: 1		Analysis Time..: 23:45	MDL.....: 0.082	
Nickel	98.5	0.53	mg/kg	SW846 6020	04/04-04/06/11	MGGNN1AC
		Dilution Factor: 1		Analysis Time..: 23:45	MDL.....: 0.088	
Lead	10.2	0.32	mg/kg	SW846 6020	04/04-04/06/11	MGGNN1AD
		Dilution Factor: 1		Analysis Time..: 23:45	MDL.....: 0.11	
Antimony	0.30 BN	0.53	mg/kg	SW846 6020	04/04-04/06/11	MGGNN1AE
		Dilution Factor: 1		Analysis Time..: 23:45	MDL.....: 0.17	
Selenium	0.52 B	0.53	mg/kg	SW846 6020	04/04-04/06/11	MGGNN1AF
		Dilution Factor: 1		Analysis Time..: 23:45	MDL.....: 0.17	

(Continued on next page)

Tetra Tech EC, Inc.

Client Sample ID: 04-PC-IR57-004

TOTAL Metals

Lot-Sample #...: F1D010496-009 Matrix.....: SOLID

PARAMETER	RESULT	REPORTING LIMIT	UNITS	METHOD	PREPARATION-ANALYSIS DATE	WORK ORDER #
Thallium	ND	0.48	mg/kg	SW846 6020	04/04-04/06/11	MGGNN1AG
		Dilution Factor: 1		Analysis Time..: 23:45	MDL.....: 0.11	
Vanadium	**48.8**	**1.1**	**mg/kg**	**SW846 6020**	**04/04-04/06/11**	**MGGNN1AH**
		Dilution Factor: 1		Analysis Time..: 23:45	MDL.....: 0.78	
Zinc	**48.3**	**2.1**	**mg/kg**	**SW846 6020**	**04/04-04/06/11**	**MGGNN1AJ**
		Dilution Factor: 1		Analysis Time..: 23:45	MDL.....: 1.4	

Prep Batch #...: 1095108

Mercury	**0.20 N**	**0.043**	**mg/kg**	**SW846 7471A**	**04/07/11**	**MGGNN1AR**
		Dilution Factor: 1		Analysis Time..: 09:59	MDL.....: 0.012	

NOTE(S):

Results and reporting limits have been adjusted for dry weight.

B Estimated result. Result is less than RL.

N Spiked analyte recovery is outside stated control limits.

Tetra Tech EC, Inc.

Client Sample ID: 04-PC-IR57-005

TOTAL Metals

Lot-Sample #...: F1D010496-010 Matrix.....: SOLID
Date Sampled...: 03/31/11 11:50 Date Received..: 04/01/11
% Moisture.....: 16

PARAMETER	RESULT	REPORTING LIMIT	UNITS	METHOD	PREPARATION-ANALYSIS DATE	WORK ORDER #
Prep Batch #...: 1094046						
Silver	0.032 B	0.24	mg/kg	SW846 6020	04/04-04/06/11	MGGNP1AU
		Dilution Factor: 1		Analysis Time..: 23:52	MDL.....: 0.0095	
Arsenic	3.4	1.2	mg/kg	SW846 6020	04/04-04/06/11	MGGNP1AV
		Dilution Factor: 1		Analysis Time..: 23:52	MDL.....: 0.24	
Barium	113	2.4	mg/kg	SW846 6020	04/04-04/06/11	MGGNP1AW
		Dilution Factor: 1		Analysis Time..: 23:52	MDL.....: 0.068	
Beryllium	0.36	0.12	mg/kg	SW846 6020	04/04-04/06/11	MGGNP1AX
		Dilution Factor: 1		Analysis Time..: 23:52	MDL.....: 0.017	
Cadmium	0.099	0.071	mg/kg	SW846 6020	04/04-04/06/11	MGGNP1A0
		Dilution Factor: 1		Analysis Time..: 23:52	MDL.....: 0.013	
Cobalt	19.9	0.24	mg/kg	SW846 6020	04/04-04/06/11	MGGNP1A1
		Dilution Factor: 1		Analysis Time..: 23:52	MDL.....: 0.051	
Chromium	160	2.3	mg/kg	SW846 6020	04/04-04/06/11	MGGNP1A2
		Dilution Factor: 1		Analysis Time..: 23:52	MDL.....: 0.36	
Copper	20.6	1.2	mg/kg	SW846 6020	04/04-04/06/11	MGGNP1A3
		Dilution Factor: 1		Analysis Time..: 23:52	MDL.....: 0.076	
Molybdenum	0.30 B	0.59	mg/kg	SW846 6020	04/04-04/06/11	MGGNP1AA
		Dilution Factor: 1		Analysis Time..: 23:52	MDL.....: 0.091	
Nickel	243	0.59	mg/kg	SW846 6020	04/04-04/06/11	MGGNP1AC
		Dilution Factor: 1		Analysis Time..: 23:52	MDL.....: 0.097	
Lead	6.1	0.36	mg/kg	SW846 6020	04/04-04/06/11	MGGNP1AD
		Dilution Factor: 1		Analysis Time..: 23:52	MDL.....: 0.12	
Antimony	ND N	0.59	mg/kg	SW846 6020	04/04-04/06/11	MGGNP1AE
		Dilution Factor: 1		Analysis Time..: 23:52	MDL.....: 0.19	
Selenium	0.78	0.59	mg/kg	SW846 6020	04/04-04/06/11	MGGNP1AF
		Dilution Factor: 1		Analysis Time..: 23:52	MDL.....: 0.19	

(Continued on next page)

Tetra Tech EC, Inc.

Client Sample ID: 04-PC-IR57-005

TOTAL Metals

Lot-Sample #...: F1D010496-010 Matrix.....: SOLID

PARAMETER	RESULT	REPORTING LIMIT	UNITS	METHOD	PREPARATION-ANALYSIS DATE	WORK ORDER #
Thallium	ND	0.53	mg/kg	SW846 6020	04/04-04/06/11	MGGNP1AG
		Dilution Factor: 1		Analysis Time..: 23:52	MDL.....: 0.12	
Vanadium	54.6	1.2	mg/kg	SW846 6020	04/04-04/06/11	MGGNP1AH
		Dilution Factor: 1		Analysis Time..: 23:52	MDL.....: 0.87	
Zinc	43.6	2.4	mg/kg	SW846 6020	04/04-04/06/11	MGGNP1AJ
		Dilution Factor: 1		Analysis Time..: 23:52	MDL.....: 1.6	
Prep Batch #...: 1095108						
Mercury	0.21 N	0.048	mg/kg	SW846 7471A	04/07/11	MGGNP1AR
		Dilution Factor: 1		Analysis Time..: 10:01	MDL.....: 0.013	

NOTE(S):

Results and reporting limits have been adjusted for dry weight.

B Estimated result. Result is less than RL.

N Spiked analyte recovery is outside stated control limits.

METHOD BLANK REPORT

TOTAL Metals

Client Lot #...: F1D010496 **Matrix.....:** SOLID

PARAMETER	RESULT	REPORTING LIMIT	UNITS	METHOD	PREPARATION-ANALYSIS DATE	WORK ORDER #
MB Lot-Sample #: F1D040000-046 **Prep Batch #...:** 1094046						
Antimony	ND	0.5	mg/kg	SW846 6020	04/04-04/06/11	MGHQA1AN
		Dilution Factor: 1				
		Analysis Time..: 21:59				
Arsenic	ND	1	mg/kg	SW846 6020	04/04-04/06/11	MGHQA1AC
		Dilution Factor: 1				
		Analysis Time..: 21:59				
Barium	ND	2	mg/kg	SW846 6020	04/04-04/06/11	MGHQA1AD
		Dilution Factor: 1				
		Analysis Time..: 21:59				
Beryllium	ND	0.1	mg/kg	SW846 6020	04/04-04/06/11	MGHQA1AE
		Dilution Factor: 1				
		Analysis Time..: 21:59				
Cadmium	ND	0.06	mg/kg	SW846 6020	04/04-04/06/11	MGHQA1AF
		Dilution Factor: 1				
		Analysis Time..: 21:59				
Chromium	ND	1.9	mg/kg	SW846 6020	04/04-04/06/11	MGHQA1AH
		Dilution Factor: 1				
		Analysis Time..: 21:59				
Cobalt	ND	0.2	mg/kg	SW846 6020	04/04-04/06/11	MGHQA1AG
		Dilution Factor: 1				
		Analysis Time..: 21:59				
Copper	ND	1	mg/kg	SW846 6020	04/04-04/06/11	MGHQA1AJ
		Dilution Factor: 1				
		Analysis Time..: 21:59				
Lead	ND	0.3	mg/kg	SW846 6020	04/04-04/06/11	MGHQA1AM
		Dilution Factor: 1				
		Analysis Time..: 21:59				
Molybdenum	ND	0.5	mg/kg	SW846 6020	04/04-04/06/11	MGHQA1AK
		Dilution Factor: 1				
		Analysis Time..: 21:59				
Nickel	ND	0.5	mg/kg	SW846 6020	04/04-04/06/11	MGHQA1AL
		Dilution Factor: 1				
		Analysis Time..: 21:59				

(Continued on next page)

METHOD BLANK REPORT

TOTAL Metals

Client Lot #...: F1D010496 **Matrix.....:** SOLID

PARAMETER	RESULT	REPORTING LIMIT	UNITS	METHOD	PREPARATION-ANALYSIS DATE	WORK ORDER #
Selenium	ND	0.5	mg/kg	SW846 6020	04/04-04/06/11	MGHQA1AP
		Dilution Factor: 1				
		Analysis Time..: 21:59				
Silver	ND	0.2	mg/kg	SW846 6020	04/04-04/06/11	MGHQA1AA
		Dilution Factor: 1				
		Analysis Time..: 21:59				
Thallium	ND	0.45	mg/kg	SW846 6020	04/04-04/06/11	MGHQA1AQ
		Dilution Factor: 1				
		Analysis Time..: 21:59				
Vanadium	ND	1	mg/kg	SW846 6020	04/04-04/06/11	MGHQA1AR
		Dilution Factor: 1				
		Analysis Time..: 21:59				
Zinc	ND	2	mg/kg	SW846 6020	04/04-04/06/11	MGHQA1AT
		Dilution Factor: 1				
		Analysis Time..: 21:59				

MB Lot-Sample #: F1D050000-108 **Prep Batch #...:** 1095108

Mercury	ND	0.04	mg/kg	SW846 7471A	04/07/11	MGK7R1AA
		Dilution Factor: 1				
		Analysis Time..: 09:26				

NOTE(S):

Calculations are performed before rounding to avoid round-off errors in calculated results.

LABORATORY CONTROL SAMPLE EVALUATION REPORT

TOTAL Metals

Client Lot #...: F1D010496 **Matrix.....:** SOLID

PARAMETER	PERCENT RECOVERY	RECOVERY LIMITS	METHOD	PREPARATION-ANALYSIS DATE	WORK ORDER #
LCS Lot-Sample#: F1D040000-046 **Prep Batch #...:** 1094046					
Silver	99	(80 - 120)	SW846 6020	04/04-04/06/11	MGHQA1AU
		Dilution Factor: 1	Analysis Time..: 22:06		
Arsenic	100	(80 - 120)	SW846 6020	04/04-04/06/11	MGHQA1AV
		Dilution Factor: 1	Analysis Time..: 22:06		
Barium	99	(80 - 120)	SW846 6020	04/04-04/06/11	MGHQA1AW
		Dilution Factor: 1	Analysis Time..: 22:06		
Beryllium	102	(80 - 120)	SW846 6020	04/04-04/06/11	MGHQA1AX
		Dilution Factor: 1	Analysis Time..: 22:06		
Cadmium	97	(80 - 120)	SW846 6020	04/04-04/06/11	MGHQA1A0
		Dilution Factor: 1	Analysis Time..: 22:06		
Cobalt	105	(80 - 120)	SW846 6020	04/04-04/06/11	MGHQA1A1
		Dilution Factor: 1	Analysis Time..: 22:06		
Chromium	100	(80 - 120)	SW846 6020	04/04-04/06/11	MGHQA1A2
		Dilution Factor: 1	Analysis Time..: 22:06		
Copper	104	(80 - 120)	SW846 6020	04/04-04/06/11	MGHQA1A3
		Dilution Factor: 1	Analysis Time..: 22:06		
Molybdenum	102	(80 - 120)	SW846 6020	04/04-04/06/11	MGHQA1A4
		Dilution Factor: 1	Analysis Time..: 22:06		
Nickel	104	(80 - 120)	SW846 6020	04/04-04/06/11	MGHQA1A5
		Dilution Factor: 1	Analysis Time..: 22:06		
Lead	103	(80 - 120)	SW846 6020	04/04-04/06/11	MGHQA1A6
		Dilution Factor: 1	Analysis Time..: 22:06		
Antimony	98	(80 - 120)	SW846 6020	04/04-04/06/11	MGHQA1A7
		Dilution Factor: 1	Analysis Time..: 22:06		
Selenium	101	(80 - 120)	SW846 6020	04/04-04/06/11	MGHQA1A8
		Dilution Factor: 1	Analysis Time..: 22:06		
Thallium	96	(80 - 120)	SW846 6020	04/04-04/06/11	MGHQA1A9
		Dilution Factor: 1	Analysis Time..: 22:06		

(Continued on next page)

LABORATORY CONTROL SAMPLE EVALUATION REPORT

TOTAL Metals

Client Lot #...: F1D010496 **Matrix.....:** SOLID

PARAMETER	PERCENT RECOVERY	RECOVERY LIMITS	METHOD	PREPARATION-ANALYSIS DATE	WORK ORDER #
Vanadium	101	(80 - 120)	SW846 6020	04/04-04/06/11	MGHQA1CA
		Dilution Factor: 1	Analysis Time..: 22:06		
Zinc	100	(80 - 120)	SW846 6020	04/04-04/06/11	MGHQA1CC
		Dilution Factor: 1	Analysis Time..: 22:06		

LCS Lot-Sample#: F1D050000-108 **Prep Batch #...:** 1095108

Mercury	109	(80 - 120)	SW846 7471A	04/07/11	MGK7R1AC
		Dilution Factor: 1	Analysis Time..: 09:28		

NOTE(S):

Calculations are performed before rounding to avoid round-off errors in calculated results.

MATRIX SPIKE SAMPLE EVALUATION REPORT

TOTAL Metals

Client Lot #...: F1D010496 **Matrix.....:** SOLID
Date Sampled...: 03/31/11 10:40 **Date Received..:** 04/01/11

PARAMETER	PERCENT RECOVERY	RECOVERY LIMITS	RPD	RPD LIMITS	METHOD	PREPARATION-ANALYSIS DATE	WORK ORDER #
MS Lot-Sample #: F1D010496-001 **Prep Batch #...:** 1094046							
						% Moisture.....: 4.5	
Antimony	78 N	(80 - 120)			SW846 6020	04/04-04/06/11	MGGMG1CV
	78 N	(80 - 120)	0.67	(0-20)	SW846 6020	04/04-04/06/11	MGGMG1CW
		Dilution Factor: 1					
		Analysis Time..: 22:26					
Arsenic	99	(80 - 120)			SW846 6020	04/04-04/06/11	MGGMG1A7
	102	(80 - 120)	3.6	(0-20)	SW846 6020	04/04-04/06/11	MGGMG1A8
		Dilution Factor: 1					
		Analysis Time..: 22:26					
Barium	101	(80 - 120)			SW846 6020	04/04-04/06/11	MGGMG1A9
	100	(80 - 120)	0.59	(0-20)	SW846 6020	04/04-04/06/11	MGGMG1CA
		Dilution Factor: 1					
		Analysis Time..: 22:26					
Beryllium	99	(80 - 120)			SW846 6020	04/04-04/06/11	MGGMG1CC
	101	(80 - 120)	1.8	(0-20)	SW846 6020	04/04-04/06/11	MGGMG1CD
		Dilution Factor: 1					
		Analysis Time..: 22:26					
Cadmium	95	(80 - 120)			SW846 6020	04/04-04/06/11	MGGMG1CE
	96	(80 - 120)	0.36	(0-20)	SW846 6020	04/04-04/06/11	MGGMG1CF
		Dilution Factor: 1					
		Analysis Time..: 22:26					
Chromium	104	(80 - 120)			SW846 6020	04/04-04/06/11	MGGMG1CJ
	101	(80 - 120)	2.4	(0-20)	SW846 6020	04/04-04/06/11	MGGMG1CK
		Dilution Factor: 1					
		Analysis Time..: 22:26					
Cobalt	101	(80 - 120)			SW846 6020	04/04-04/06/11	MGGMG1CG
	102	(80 - 120)	0.87	(0-20)	SW846 6020	04/04-04/06/11	MGGMG1CH
		Dilution Factor: 1					
		Analysis Time..: 22:26					
Copper	105	(80 - 120)			SW846 6020	04/04-04/06/11	MGGMG1CL
	101	(80 - 120)	3.3	(0-20)	SW846 6020	04/04-04/06/11	MGGMG1CM
		Dilution Factor: 1					
		Analysis Time..: 22:26					

(Continued on next page)

MATRIX SPIKE SAMPLE EVALUATION REPORT

TOTAL Metals

Client Lot #...: F1D010496 **Matrix.....:** SOLID
Date Sampled...: 03/31/11 10:40 **Date Received..:** 04/01/11

PARAMETER	PERCENT RECOVERY	RECOVERY LIMITS	RPD	RPD LIMITS	METHOD	PREPARATION-ANALYSIS DATE	WORK ORDER #
Lead	101	(80 - 120)			SW846 6020	04/04-04/06/11	MGGMG1CT
	103	(80 - 120)	1.5	(0-20)	SW846 6020	04/04-04/06/11	MGGMG1CU
		Dilution Factor: 1					
		Analysis Time..: 22:26					
Molybdenum	96	(80 - 120)			SW846 6020	04/04-04/06/11	MGGMG1CN
	97	(80 - 120)	1.1	(0-20)	SW846 6020	04/04-04/06/11	MGGMG1CP
		Dilution Factor: 1					
		Analysis Time..: 22:26					
Nickel	104	(80 - 120)			SW846 6020	04/04-04/06/11	MGGMG1CQ
	107	(80 - 120)	2.1	(0-20)	SW846 6020	04/04-04/06/11	MGGMG1CR
		Dilution Factor: 1					
		Analysis Time..: 22:26					
Selenium	97	(80 - 120)			SW846 6020	04/04-04/06/11	MGGMG1CX
	98	(80 - 120)	1.2	(0-20)	SW846 6020	04/04-04/06/11	MGGMG1C0
		Dilution Factor: 1					
		Analysis Time..: 22:26					
Silver	97	(80 - 120)			SW846 6020	04/04-04/06/11	MGGMG1A5
	98	(80 - 120)	1.1	(0-20)	SW846 6020	04/04-04/06/11	MGGMG1A6
		Dilution Factor: 1					
		Analysis Time..: 22:26					
Thallium	94	(80 - 120)			SW846 6020	04/04-04/06/11	MGGMG1C1
	94	(80 - 120)	0.72	(0-20)	SW846 6020	04/04-04/06/11	MGGMG1C2
		Dilution Factor: 1					
		Analysis Time..: 22:26					
Vanadium	107	(80 - 120)			SW846 6020	04/04-04/06/11	MGGMG1C3
	109	(80 - 120)	1.2	(0-20)	SW846 6020	04/04-04/06/11	MGGMG1C4
		Dilution Factor: 1					
		Analysis Time..: 22:26					
Zinc	104	(80 - 120)			SW846 6020	04/04-04/06/11	MGGMG1C5
	98	(80 - 120)	4.7	(0-20)	SW846 6020	04/04-04/06/11	MGGMG1C6
		Dilution Factor: 1					
		Analysis Time..: 22:26					

MS Lot-Sample #: F1D010496-001 **Prep Batch #...:** 1095108

% Moisture.....: 4.5

(Continued on next page)

MATRIX SPIKE SAMPLE EVALUATION REPORT

TOTAL Metals

Client Lot #...: F1D010496 **Matrix.....:** SOLID
Date Sampled...: 03/31/11 10:40 **Date Received..:** 04/01/11

PARAMETER	PERCENT RECOVERY	RECOVERY LIMITS	RPD	RPD LIMITS	METHOD	PREPARATION-ANALYSIS DATE	WORK ORDER #
Mercury	121 N	(80 - 120)			SW846 7471A	04/07/11	MGGMG1DG
	113	(80 - 120)	4.4	(0-20)	SW846 7471A	04/07/11	MGGMG1DH

Dilution Factor: 1
Analysis Time..: 09:34

NOTE(S):

Calculations are performed before rounding to avoid round-off errors in calculated results.

Results and reporting limits have been adjusted for dry weight.

N Spiked analyte recovery is outside stated control limits.

Tetra Tech EC, Inc.

Client Sample ID: 04-PE-IR04/72-001

General Chemistry

Lot-Sample #...: F1D010496-001 Work Order #...: MGGMG Matrix.....: SOLID
Date Sampled...: 03/31/11 10:40 Date Received..: 04/01/11
% Moisture.....: 4.5

PARAMETER	RESULT	RL	UNITS	METHOD	PREPARATION-ANALYSIS DATE	PREP BATCH #
Oil and Grease	90.6 B,J	209	mg/kg	CFR136A 1664A HEM	04/11/11	1101397
	Dilution Factor: 1			Analysis Time..: 00:00	MDL.....: 45.1	
Percent Moisture	4.51	0.100	%	MCAWW 160.3 MOD	04/04-04/05/11	1094312
	Dilution Factor: 1			Analysis Time..: 00:00	MDL.....:	

NOTE(S):

RL Reporting Limit

Results and reporting limits have been adjusted for dry weight.

B Estimated result. Result is less than RL.

J Method blank contamination. The associated method blank contains the target analyte at a reportable level.

Tetra Tech EC, Inc.

Client Sample ID: 04-PE-IR04/72-002

General Chemistry

Lot-Sample #...: F1D010496-002 Work Order #...: MGGMV Matrix.....: SOLID
Date Sampled...: 03/31/11 10:50 Date Received..: 04/01/11
% Moisture.....: 15

PARAMETER	RESULT	RL	UNITS	METHOD	PREPARATION-ANALYSIS DATE	PREP BATCH #
Oil and Grease	453 J	235	mg/kg	CFR136A 1664A HEM	04/11/11	1101397
		Dilution Factor: 1		Analysis Time..: 00:00	MDL.....: 50.6	
Percent Moisture	14.9	0.100	%	MCAWW 160.3 MOD	04/04-04/05/11	1094312
		Dilution Factor: 1		Analysis Time..: 00:00	MDL.....:	

NOTE(S):

RL Reporting Limit

Results and reporting limits have been adjusted for dry weight.

J Method blank contamination. The associated method blank contains the target analyte at a reportable level.

Tetra Tech EC, Inc.

Client Sample ID: 04-PE-IR04/72-003

General Chemistry

Lot-Sample #...: F1D010496-003 Work Order #...: MGGM0 Matrix.....: SOLID
Date Sampled...: 03/31/11 11:00 Date Received..: 04/01/11
% Moisture.....: 12

PARAMETER	RESULT	RL	UNITS	METHOD	PREPARATION-ANALYSIS DATE	PREP BATCH #
Oil and Grease	774 J	228	mg/kg	CFR136A 1664A HEM	04/11/11	1101397
		Dilution Factor: 1		Analysis Time..: 00:00	MDL.....: 49.2	
Percent Moisture	12.4	0.100	%	MCAWW 160.3 MOD	04/04-04/05/11	1094312
		Dilution Factor: 1		Analysis Time..: 00:00	MDL.....:	

NOTE(S):

RL Reporting Limit

Results and reporting limits have been adjusted for dry weight.

J Method blank contamination. The associated method blank contains the target analyte at a reportable level.

Tetra Tech EC, Inc.

Client Sample ID: 04-PE-IR04/72-004

General Chemistry

Lot-Sample #...: F1D010496-004 Work Order #...: MGGM1 Matrix.....: SOLID
Date Sampled...: 03/31/11 11:10 Date Received..: 04/01/11
% Moisture.....: 17

PARAMETER	RESULT	RL	UNITS	METHOD	PREPARATION-ANALYSIS DATE	PREP BATCH #
Oil and Grease	1000 J	240	mg/kg	CFR136A 1664A HEM	04/11/11	1101397
		Dilution Factor: 1		Analysis Time..: 00:00	MDL.....: 51.6	
Percent Moisture	16.5	0.100	%	MCAWW 160.3 MOD	04/04-04/05/11	1094312
		Dilution Factor: 1		Analysis Time..: 00:00	MDL.....:	

NOTE(S):

RL Reporting Limit

Results and reporting limits have been adjusted for dry weight.

J Method blank contamination. The associated method blank contains the target analyte at a reportable level.

Tetra Tech EC, Inc.

Client Sample ID: 04-PE-IR04/72-005

General Chemistry

Lot-Sample #...: F1D010496-005 Work Order #...: MGGM2 Matrix.....: SOLID
Date Sampled...: 03/31/11 11:15 Date Received..: 04/01/11
% Moisture.....: 4.0

PARAMETER	RESULT	RL	UNITS	METHOD	PREPARATION-ANALYSIS DATE	PREP BATCH #
Oil and Grease	368 J	208	mg/kg	CFR136A 1664A HEM	04/11/11	1101397
		Dilution Factor: 1		Analysis Time..: 00:00	MDL.....: 44.8	
Percent Moisture	4.01	0.100	%	MCAWW 160.3 MOD	04/04-04/05/11	1094312
		Dilution Factor: 1		Analysis Time..: 00:00	MDL.....:	

NOTE(S):

RL Reporting Limit

Results and reporting limits have been adjusted for dry weight.

J Method blank contamination. The associated method blank contains the target analyte at a reportable level.

Tetra Tech EC, Inc.

Client Sample ID: 04-PC-IR57-001

General Chemistry

Lot-Sample #...: F1D010496-006 Work Order #...: MGGM4 Matrix.....: SOLID
Date Sampled...: 03/31/11 11:25 Date Received..: 04/01/11
% Moisture.....: 7.5

PARAMETER	RESULT	RL	UNITS	METHOD	PREPARATION-ANALYSIS DATE	PREP BATCH #
Oil and Grease	696 J	216	mg/kg	CFR136A 1664A HEM	04/11/11	1101397
		Dilution Factor: 1		Analysis Time..: 00:00	MDL.....: 46.5	
Percent Moisture	7.47	0.100	%	MCAWW 160.3 MOD	04/04-04/05/11	1094312
		Dilution Factor: 1		Analysis Time..: 00:00	MDL.....:	
TPH	307	216	mg/kg	CFR136A 1664A SGT	04/05/11	1095168
		Dilution Factor: 1		Analysis Time..: 00:00	MDL.....: 45.2	

NOTE(S):

RL Reporting Limit

Results and reporting limits have been adjusted for dry weight.

J Method blank contamination. The associated method blank contains the target analyte at a reportable level.

Tetra Tech EC, Inc.

Client Sample ID: 04-PC-IR57-002

General Chemistry

Lot-Sample #...: F1D010496-007 Work Order #...: MGGNK Matrix.....: SOLID
Date Sampled...: 03/31/11 11:30 Date Received..: 04/01/11
% Moisture.....: 13

PARAMETER	RESULT	RL	UNITS	METHOD	PREPARATION-ANALYSIS DATE	PREP BATCH #
Oil and Grease	559 J	230	mg/kg	CFR136A 1664A HEM	04/11/11	1101397
		Dilution Factor: 1		Analysis Time..: 00:00	MDL.....: 49.5	
Percent Moisture	13.0	0.100	%	MCAWW 160.3 MOD	04/04-04/05/11	1094312
		Dilution Factor: 1		Analysis Time..: 00:00	MDL.....:	
TPH	192 B	230	mg/kg	CFR136A 1664A SGT	04/05/11	1095168
		Dilution Factor: 1		Analysis Time..: 00:00	MDL.....: 48.1	

NOTE(S):

RL Reporting Limit

Results and reporting limits have been adjusted for dry weight.

J Method blank contamination. The associated method blank contains the target analyte at a reportable level.

B Estimated result. Result is less than RL.

Tetra Tech EC, Inc.

Client Sample ID: 04-PC-IR57-003

General Chemistry

Lot-Sample #...: F1D010496-008 Work Order #...: MGGNL Matrix.....: SOLID
Date Sampled...: 03/31/11 11:35 Date Received..: 04/01/11
% Moisture.....: 5.9

PARAMETER	RESULT	RL	UNITS	METHOD	PREPARATION-ANALYSIS DATE	PREP BATCH #
Oil and Grease	628 J	212	mg/kg	CFR136A 1664A HEM	04/11/11	1101397
		Dilution Factor: 1		Analysis Time..: 00:00	MDL.....: 45.7	
Percent Moisture	5.86	0.100	%	MCAWW 160.3 MOD	04/04-04/05/11	1094312
		Dilution Factor: 1		Analysis Time..: 00:00	MDL.....:	
TPH	315	212	mg/kg	CFR136A 1664A SGT	04/05/11	1095168
		Dilution Factor: 1		Analysis Time..: 00:00	MDL.....: 44.4	

NOTE(S):

RL Reporting Limit

Results and reporting limits have been adjusted for dry weight.

J Method blank contamination. The associated method blank contains the target analyte at a reportable level.

Tetra Tech EC, Inc.

Client Sample ID: 04-PC-IR57-004

General Chemistry

Lot-Sample #...: F1D010496-009 Work Order #...: MGGNN Matrix.....: SOLID
Date Sampled...: 03/31/11 11:40 Date Received..: 04/01/11
% Moisture.....: 6.1

PARAMETER	RESULT	RL	UNITS	METHOD	PREPARATION-ANALYSIS DATE	PREP BATCH #
Oil and Grease	500 J	213	mg/kg	CFR136A 1664A HEM	04/11/11	1101397
		Dilution Factor: 1		Analysis Time..: 00:00	MDL.....: 45.8	
Percent Moisture	6.12	0.100	%	MCAWW 160.3 MOD	04/04-04/05/11	1094312
		Dilution Factor: 1		Analysis Time..: 00:00	MDL.....:	
TPH	206 B	213	mg/kg	CFR136A 1664A SGT	04/05/11	1095168
		Dilution Factor: 1		Analysis Time..: 00:00	MDL.....: 44.5	

NOTE(S):

RL Reporting Limit

Results and reporting limits have been adjusted for dry weight.

J Method blank contamination. The associated method blank contains the target analyte at a reportable level.

B Estimated result. Result is less than RL.

Tetra Tech EC, Inc.

Client Sample ID: 04-PC-IR57-005

General Chemistry

Lot-Sample #...: F1D010496-010 Work Order #...: MGGNP Matrix.....: SOLID
Date Sampled...: 03/31/11 11:50 Date Received..: 04/01/11
% Moisture.....: 16

PARAMETER	RESULT	RL	UNITS	METHOD	PREPARATION-ANALYSIS DATE	PREP BATCH #
Oil and Grease	135 B,J	237	mg/kg	CFR136A 1664A HEM	04/11/11	1101397
		Dilution Factor: 1		Analysis Time..: 00:00	MDL.....: 51.0	
Percent Moisture	15.7	0.100	%	MCAWW 160.3 MOD	04/04-04/05/11	1094312
		Dilution Factor: 1		Analysis Time..: 00:00	MDL.....:	
TPH	135 B	237	mg/kg	CFR136A 1664A SGT	04/05/11	1095168
		Dilution Factor: 1		Analysis Time..: 00:00	MDL.....: 49.6	

NOTE(S):

RL Reporting Limit

Results and reporting limits have been adjusted for dry weight.

B Estimated result. Result is less than RL.

J Method blank contamination. The associated method blank contains the target analyte at a reportable level.

METHOD BLANK REPORT

General Chemistry

Client Lot #...: F1D010496 **Matrix.....:** SOLID

PARAMETER	RESULT	REPORTING LIMIT	UNITS	METHOD	PREPARATION-ANALYSIS DATE	PREP BATCH #
Oil and Grease		Work Order #: MGVWM1AA		MB Lot-Sample #:	F1D110000-397	
	120 B	**200**	**mg/kg**	**CFR136A 1664A HEM**	**04/11/11**	**1101397**
		Dilution Factor: 1				
		Analysis Time..: 00:00				
TPH		Work Order #: MGLDF1AA		MB Lot-Sample #:	F1D050000-168	
	ND	200	mg/kg	CFR136A 1664A SGT	04/05/11	1095168
		Dilution Factor: 1				
		Analysis Time..: 00:00				

NOTE(S):

Calculations are performed before rounding to avoid round-off errors in calculated results.

B Estimated result. Result is less than RL.

LABORATORY CONTROL SAMPLE EVALUATION REPORT

General Chemistry

Client Lot #...: F1D010496 **Matrix.....:** SOLID

PARAMETER	PERCENT RECOVERY	RECOVERY LIMITS	METHOD	PREPARATION-ANALYSIS DATE	PREP BATCH #
Oil and Grease		Work Order #: MGVWM1AC	LCS Lot-Sample#: F1D110000-397		
	78.8	(58.0- 103	CFR136A 1664A HEM	04/11/11	1101397
		Dilution Factor: 1	Analysis Time..: 00:00		
TPH		Work Order #: MGLDF1AC	LCS Lot-Sample#: F1D050000-168		
	99.0	(64.0- 132	CFR136A 1664A SGT	04/05/11	1095168
		Dilution Factor: 1	Analysis Time..: 00:00		

NOTE(S):

Calculations are performed before rounding to avoid round-off errors in calculated results.

MATRIX SPIKE SAMPLE EVALUATION REPORT

General Chemistry

Client Lot #...: F1D010496 **Matrix.....:** SOLID
Date Sampled...: 03/31/11 10:40 **Date Received..:** 04/01/11

Percnt Moisture: 14

PARAMETER	PERCENT RECOVERY	RECOVERY LIMITS	METHOD	PREPARATION-ANALYSIS DATE	PREP BATCH #
Oil and Grease		Work Order #...: MGGMG1DJ		MS Lot-Sample #: F1D010496-001	
	70.9 N	(75.0- 125	CFR136A 1664A HEM	04/11/11	1101397
		Dilution Factor: 1	Analysis Time..: 00:00		
TPH		Work Order #...: MGGM41A6		MS Lot-Sample #: F1D010496-006	
	141 N	(64.0- 132	CFR136A 1664A SGT	04/05/11	1095168
		Dilution Factor: 1	Analysis Time..: 00:00		

NOTE(S):

Calculations are performed before rounding to avoid round-off errors in calculated results.

N Spiked analyte recovery is outside stated control limits.

Results and reporting limits have been adjusted for dry weight.

SAMPLE DUPLICATE EVALUATION REPORT

General Chemistry

Client Lot #...: F1D010496 **Work Order #...:** MFGTT-SMP MFGTT-DUP **Matrix.....:** SOLID

Date Sampled...: 03/08/11 10:15 **Date Received..:** 03/10/11

% Moisture.....: 14

PARAM	RESULT	DUPLICATE RESULT	UNITS	RPD	RPD LIMIT	METHOD	PREPARATION-ANALYSIS DATE	PREP BATCH #
Percent Moisture						SD Lot-Sample #:	F1C100494-001	
	13.9	8.13	%	52.6	(0-30.0	MCAWW 160.3 MOD	04/04-04/05/11	1094312

Dilution Factor: 1 Analysis Time..: 00:00

SAMPLE DUPLICATE EVALUATION REPORT

General Chemistry

Client Lot #...: F1D010496 **Work Order #...:** MGGM4-SMP MGGM4-DUP **Matrix.....:** SOLID

Date Sampled...: 03/31/11 11:25 **Date Received..:** 04/01/11

% Moisture.....: 7.5

PARAM	RESULT	DUPLICATE RESULT	UNITS	RPD	RPD LIMIT	METHOD	PREPARATION-ANALYSIS DATE	PREP BATCH #
TPH						SD Lot-Sample #: F1D010496-006		
	307	290	mg/kg	5.72	(0-20.0	CFR136A 1664A SGT	04/05/11	1095168

Dilution Factor: 1 Analysis Time..: 00:00

NOTE(S):

Calculations are performed before rounding to avoid round-off errors in calculated results.

Results and reporting limits have been adjusted for dry weight.

SAMPLE DUPLICATE EVALUATION REPORT

General Chemistry

Client Lot #...: F1D010496 **Work Order #...:** MGGMG-SMP MGGMG-DUP **Matrix.....:** SOLID

Date Sampled...: 03/31/11 10:40 **Date Received..:** 04/01/11

% Moisture.....: 4.5

PARAM	RESULT	DUPLICATE RESULT	UNITS	RPD	RPD LIMIT	METHOD	PREPARATION-ANALYSIS DATE	PREP BATCH #
Oil and Grease						SD Lot-Sample #: F1D010496-001		
	90.6 B,J	115 B	mg/kg	23.8	(0-30.0	CFR136A 1664A HEM	04/11/11	1101397

Dilution Factor: 1 Analysis Time..: 00:00

NOTE(S):

Calculations are performed before rounding to avoid round-off errors in calculated results.

Results and reporting limits have been adjusted for dry weight.

B Estimated result. Result is less than RL.

J Method blank contamination. The associated method blank contains the target analyte at a reportable level.

TestAmerica St. Louis

F1D010496

CLIENT ANALYSIS SUMMARY

Storage Loc: 1-57,ENCORE

Project Manager: EKS Quote #: 88396 SDG:

Date Received: 2011-04-01

Project: CTO 4 HPS 40440004

Analytical Due Date: 2011-04-13

PO#: 1059241-12 Report to: Sabina Sudoko

Report Due Date: 2011-04-15

Client: 494696 Tetra Tech EC, Inc.

Report Type: X

#SMPS In LOT: 10 EDD Code: 00

This project requires compliance with the DOD QSM 3.0 Please refer to client Memo #4 NO RAD SCREEN for aerod gamma in 250ml sealed polys.

LOGIN - Please login chemistry and radiochemistry into two separate lots. WRITE LOT NUMBER ON ALL COCS

CALENDAR DAYS FOR ALL TATS!! INFORM PM OF ANY TOTAL SR HIT AND PROCEED WITH SR-90 ANALYSIS ASAP!!!

Proceed with Sr-90 if gross beta is > 8.5 pCi/L Proceed with Ra-226 21 day ingrowth if TAR > 2.5 pCi/L

SAMPLE #	CLIENT SAMPLE ID	Site ID	Client Matrix	DATE/TIME SAMPLED	WORKORDER	A
1	04-PE-IR04/72-001			2011-03-31 / 1040	MGGMG	SOLID

SAMPLE COMMENTS:

	XX	HS	SW846	8015 MOD	SOLID, 8015 MOD, DRO	13	SONICATION - Low Level	DQ	DOD QSM V3	PROT: O	WRK LOC	06		
	XX	QH	SW846	8082	SOLID, 8082 MOD, PCBs	71	SONICATION w/ACID STRIP (PCB)	DQ	DOD QSM V3	PROT: O	WRK LOC	06		
	XX	WU	SW846	8015 MOD	SOLID, 8015 MOD, GRO	15	PURGE AND TRAP - 5 mL purge	DQ	DOD QSM V3	PROT: O	WRK LOC	06		
	AG	MH	SW846	6020	SOLID, 6020, Metals 1 of 2	GK	METALS, TOTAL - 2% HCL	DQ	DOD QSM V3	PROT: A	WRK LOC	06		
	ZN	MH	SW846	6020	SOLID, 6020, Metals 1 of 2	GK	METALS, TOTAL - 2% HCL	DQ	DOD QSM V3	PROT: A	WRK LOC	06		
	VX	MH	SW846	6020	SOLID, 6020, Metals 1 of 2	GK	METALS, TOTAL - 2% HCL	DQ	DOD QSM V3	PROT: A	WRK LOC	06		
	TL	MH	SW846	6020	SOLID, 6020, Metals 1 of 2	GK	METALS, TOTAL - 2% HCL	DQ	DOD QSM V3	PROT: A	WRK LOC	06		
	SE	MH	SW846	6020	SOLID, 6020, Metals 1 of 2	GK	METALS, TOTAL - 2% HCL	DQ	DOD QSM V3	PROT: A	WRK LOC	06		
	SB	MH	SW846	6020	SOLID, 6020, Metals 1 of 2	GK	METALS, TOTAL - 2% HCL	DQ	DOD QSM V3	PROT: A	WRK LOC	06		
	PB	MH	SW846	6020	SOLID, 6020, Metals 1 of 2	GK	METALS, TOTAL - 2% HCL	DQ	DOD QSM V3	PROT: A	WRK LOC	06		
	CD	MH	SW846	6020	SOLID, 6020, Metals 1 of 2	GK	METALS, TOTAL - 2% HCL	DQ	DOD QSM V3	PROT: A	WRK LOC	06		
	AS	MH	SW846	6020	SOLID, 6020, Metals 1 of 2	GK	METALS, TOTAL - 2% HCL	DQ	DOD QSM V3	PROT: A	WRK LOC	06		
	BA	MH	SW846	6020	SOLID, 6020, Metals 1 of 2	GK	METALS, TOTAL - 2% HCL	DQ	DOD QSM V3	PROT: A	WRK LOC	06		
	BE	MH	SW846	6020	SOLID, 6020, Metals 1 of 2	GK	METALS, TOTAL - 2% HCL	DQ	DOD QSM V3	PROT: A	WRK LOC	06		
	NI	MH	SW846	6020	SOLID, 6020, Metals 1 of 2	GK	METALS, TOTAL - 2% HCL	DQ	DOD QSM V3	PROT: A	WRK LOC	06		
	CO	MH	SW846	6020	SOLID, 6020, Metals 1 of 2	GK	METALS, TOTAL - 2% HCL	DQ	DOD QSM V3	PROT: A	WRK LOC	06		
	MO	MH	SW846	6020	SOLID, 6020, Metals 1 of 2	GK	METALS, TOTAL - 2% HCL	DQ	DOD QSM V3	PROT: A	WRK LOC	06		
	CU	MH	SW846	6020	SOLID, 6020, Metals 1 of 2	GK	METALS, TOTAL - 2% HCL	DQ	DOD QSM V3	PROT: A	WRK LOC	06		
	CR	MH	SW846	6020	SOLID, 6020, Metals 1 of 2	GK	METALS, TOTAL - 2% HCL	DQ	DOD QSM V3	PROT: A	WRK LOC	06		
	HG	O9	SW846	7471A	SOLID, 7471, Mercury 2 of 2	70	METALS, TOTAL (Method Exclusive) - Solids	DQ	DOD QSM V3	PROT: A	WRK LOC	06		
	XX	QL	SW846	8270C	SOLID, 8270C, SVOC w/ PAH	13	SONICATION - Low Level	DQ	DOD QSM V3	PROT: O	WRK LOC	06	TIC: N	
	XX	QK	SW846	8260B	SOLID, 8260B, VOCs	15	PURGE AND TRAP - 5 mL purge	DQ	DOD QSM V3	PROT: A	WRK LOC	06	TIC: N	
	XX	ZV		RAD SCREEN	SOLID, RAD SCREEN	RA	IN-HOUSE RAD SCREEN	01	STANDARD TEST SET	PROT: A	WRK LOC	06		
	XX	MW	CFR136 A	1664A HEM	SOLID, 1664A HEM, Oil & Grease	13	SONICATION - Low Level	B3	TETRATECH HUNTERS POINT	PROT: A	WRK LOC	06		
	XX	WM	MCAW W	160.3 MOD	SOLID, 160.3 MOD, Percent Moisture	88	NO SAMPLE PREPARATION PERFORMED / DIRECT	01	STANDARD TEST SET	PROT: A	WRK LOC	06		
D	XX	WU	SW846	8015 MOD	SOLID, 8015 MOD, GRO	15	PURGE AND TRAP - 5 mL purge	DQ	DOD QSM V3	PROT: O	WRK LOC	06		
D	MO	MH	SW846	6020	SOLID, 6020, Metals 1 of 2	GK	METALS, TOTAL - 2% HCL	DQ	DOD QSM V3	PROT: A	WRK LOC	06		
D	NI	MH	SW846	6020	SOLID, 6020, Metals 1 of 2	GK	METALS, TOTAL - 2% HCL	DQ	DOD QSM V3	PROT: A	WRK LOC	06		
D	ZN	MH	SW846	6020	SOLID, 6020, Metals 1 of 2	GK	METALS, TOTAL - 2% HCL	DQ	DOD QSM V3	PROT: A	WRK LOC	06		
D	VX	MH	SW846	6020	SOLID, 6020, Metals 1 of 2	GK	METALS, TOTAL - 2% HCL	DQ	DOD QSM V3	PROT: A	WRK LOC	06		
D	TL	MH	SW846	6020	SOLID, 6020, Metals 1 of 2	GK	METALS, TOTAL - 2% HCL	DQ	DOD QSM V3	PROT: A	WRK LOC	06		
D	SE	MH	SW846	6020	SOLID, 6020, Metals 1 of 2	GK	METALS, TOTAL - 2% HCL	DQ	DOD QSM V3	PROT: A	WRK LOC	06		
D	SB	MH	SW846	6020	SOLID, 6020, Metals 1 of 2	GK	METALS, TOTAL - 2% HCL	DQ	DOD QSM V3	PROT: A	WRK LOC	06		
D	BA	MH	SW846	6020	SOLID, 6020, Metals 1 of 2	GK	METALS, TOTAL - 2% HCL	DQ	DOD QSM V3	PROT: A	WRK LOC	06		

F1D010496 CLIENT ANALYSIS SUMMARY

Storage Loc: 1-57,ENCORE

Project Manager: EKS Quote #: 88396 SDG:

Project: CTO 4 HPS 40440004

PO#: 1059241-12 Report to: Sabina Sudoko

Client: 494696 Tetra Tech EC, Inc.

#SMPS In LOT: 10

Date Received: 2011-04-01
Analytical Due Date: 2011-04-13
Report Due Date: 2011-04-15
Report Type: X
EDD Code: 00

This project requires compliance with the DOD QSM 3.0 Please refer to client Memo #4 NO RAD SCREEN for aerod gamma in 250ml sealed polys.
LOGIN - Please login chemistry and radiochemistry into two separate lots. WRITE LOT NUMBER ON ALL COCS
CALENDAR DAYS FOR ALL TATS!! INFORM PM OF ANY TOTAL SR HIT AND PROCEED WITH SR-90 ANALYSIS ASAP!!!
Proceed with Sr-90 if gross beta is > 8.5 pCi/L Proceed with Ra-226 21 day ingrowth if TAR > 2.5 pCi/L

D	PB	MH	SW846	6020	SOLID, 6020, Metals 1 of 2	GK	METALS, TOTAL - 2% HCL	DQ	DOD QSM V3	PROT: A	WRK LOC	06
D	AS	MH	SW846	6020	SOLID, 6020, Metals 1 of 2	GK	METALS, TOTAL - 2% HCL	DQ	DOD QSM V3	PROT: A	WRK LOC	06
D	BE	MH	SW846	6020	SOLID, 6020, Metals 1 of 2	GK	METALS, TOTAL - 2% HCL	DQ	DOD QSM V3	PROT: A	WRK LOC	06
D	CD	MH	SW846	6020	SOLID, 6020, Metals 1 of 2	GK	METALS, TOTAL - 2% HCL	DQ	DOD QSM V3	PROT: A	WRK LOC	06
D	CO	MH	SW846	6020	SOLID, 6020, Metals 1 of 2	GK	METALS, TOTAL - 2% HCL	DQ	DOD QSM V3	PROT: A	WRK LOC	06
D	CR	MH	SW846	6020	SOLID, 6020, Metals 1 of 2	GK	METALS, TOTAL - 2% HCL	DQ	DOD QSM V3	PROT: A	WRK LOC	06
D	AG	MH	SW846	6020	SOLID, 6020, Metals 1 of 2	GK	METALS, TOTAL - 2% HCL	DQ	DOD QSM V3	PROT: A	WRK LOC	06
D	CU	MH	SW846	6020	SOLID, 6020, Metals 1 of 2	GK	METALS, TOTAL - 2% HCL	DQ	DOD QSM V3	PROT: A	WRK LOC	06
S	XX	WU	SW846	8015 MOD	SOLID, 8015 MOD, GRO	15	PURGE AND TRAP - 5 mL purge	DQ	DOD QSM V3	PROT: O	WRK LOC	06
S	CU	MH	SW846	6020	SOLID, 6020, Metals 1 of 2	GK	METALS, TOTAL - 2% HCL	DQ	DOD QSM V3	PROT: A	WRK LOC	06
S	VX	MH	SW846	6020	SOLID, 6020, Metals 1 of 2	GK	METALS, TOTAL - 2% HCL	DQ	DOD QSM V3	PROT: A	WRK LOC	06
S	TL	MH	SW846	6020	SOLID, 6020, Metals 1 of 2	GK	METALS, TOTAL - 2% HCL	DQ	DOD QSM V3	PROT: A	WRK LOC	06
S	SE	MH	SW846	6020	SOLID, 6020, Metals 1 of 2	GK	METALS, TOTAL - 2% HCL	DQ	DOD QSM V3	PROT: A	WRK LOC	06
S	SB	MH	SW846	6020	SOLID, 6020, Metals 1 of 2	GK	METALS, TOTAL - 2% HCL	DQ	DOD QSM V3	PROT: A	WRK LOC	06
S	PB	MH	SW846	6020	SOLID, 6020, Metals 1 of 2	GK	METALS, TOTAL - 2% HCL	DQ	DOD QSM V3	PROT: A	WRK LOC	06
S	ZN	MH	SW846	6020	SOLID, 6020, Metals 1 of 2	GK	METALS, TOTAL - 2% HCL	DQ	DOD QSM V3	PROT: A	WRK LOC	06
S	AG	MH	SW846	6020	SOLID, 6020, Metals 1 of 2	GK	METALS, TOTAL - 2% HCL	DQ	DOD QSM V3	PROT: A	WRK LOC	06
S	CR	MH	SW846	6020	SOLID, 6020, Metals 1 of 2	GK	METALS, TOTAL - 2% HCL	DQ	DOD QSM V3	PROT: A	WRK LOC	06
S	CO	MH	SW846	6020	SOLID, 6020, Metals 1 of 2	GK	METALS, TOTAL - 2% HCL	DQ	DOD QSM V3	PROT: A	WRK LOC	06
S	CD	MH	SW846	6020	SOLID, 6020, Metals 1 of 2	GK	METALS, TOTAL - 2% HCL	DQ	DOD QSM V3	PROT: A	WRK LOC	06
S	BE	MH	SW846	6020	SOLID, 6020, Metals 1 of 2	GK	METALS, TOTAL - 2% HCL	DQ	DOD QSM V3	PROT: A	WRK LOC	06
S	BA	MH	SW846	6020	SOLID, 6020, Metals 1 of 2	GK	METALS, TOTAL - 2% HCL	DQ	DOD QSM V3	PROT: A	WRK LOC	06
S	AS	MH	SW846	6020	SOLID, 6020, Metals 1 of 2	GK	METALS, TOTAL - 2% HCL	DQ	DOD QSM V3	PROT: A	WRK LOC	06
S	MO	MH	SW846	6020	SOLID, 6020, Metals 1 of 2	GK	METALS, TOTAL - 2% HCL	DQ	DOD QSM V3	PROT: A	WRK LOC	06
S	NI	MH	SW846	6020	SOLID, 6020, Metals 1 of 2	GK	METALS, TOTAL - 2% HCL	DQ	DOD QSM V3	PROT: A	WRK LOC	06

SAMPLE #	CLIENT SAMPLE ID	Site ID	Client Matrix	DATE/TIME SAMPLED	WORKORDER	A
2	04-PE-IR04/72-002			2011-03-31 / 1050	MGGMV	SOLID

SAMPLE COMMENTS:

XX	HS	SW846	8015 MOD	SOLID, 8015 MOD, DRO	13	SONICATION - Low Level	DQ	DOD QSM V3	PROT: O	WRK LOC	06
XX	QH	SW846	8082	SOLID, 8082 MOD, PCBs	71	SONICATION w/ACID STRIP (PCB)	DQ	DOD QSM V3	PROT: O	WRK LOC	06
XX	WU	SW846	8015 MOD	SOLID, 8015 MOD, GRO	15	PURGE AND TRAP - 5 mL purge	DQ	DOD QSM V3	PROT: O	WRK LOC	06
SB	MH	SW846	6020	SOLID, 6020, Metals 1 of 2	GK	METALS, TOTAL - 2% HCL	DQ	DOD QSM V3	PROT: A	WRK LOC	06
VX	MH	SW846	6020	SOLID, 6020, Metals 1 of 2	GK	METALS, TOTAL - 2% HCL	DQ	DOD QSM V3	PROT: A	WRK LOC	06
NI	MH	SW846	6020	SOLID, 6020, Metals 1 of 2	GK	METALS, TOTAL - 2% HCL	DQ	DOD QSM V3	PROT: A	WRK LOC	06
SE	MH	SW846	6020	SOLID, 6020, Metals 1 of 2	GK	METALS, TOTAL - 2% HCL	DQ	DOD QSM V3	PROT: A	WRK LOC	06
PB	MH	SW846	6020	SOLID, 6020, Metals 1 of 2	GK	METALS, TOTAL - 2% HCL	DQ	DOD QSM V3	PROT: A	WRK LOC	06
ZN	MH	SW846	6020	SOLID, 6020, Metals 1 of 2	GK	METALS, TOTAL - 2% HCL	DQ	DOD QSM V3	PROT: A	WRK LOC	06

F1D010496 CLIENT ANALYSIS SUMMARY

Storage Loc: 1-57,ENCORE

Project Manager: EKS Quote #: 88396 SDG:

Project: CTO 4 HPS 40440004

PO#: 1059241-12 Report to: Sabina Sudoko

Client: 494696 Tetra Tech EC, Inc.

#SMPS In LOT: 10

Date Received: 2011-04-01
Analytical Due Date: 2011-04-13
Report Due Date: 2011-04-15
Report Type: X
EDD Code: 00

This project requires compliance with the DOD QSM 3.0 Please refer to client Memo #4 NO RAD SCREEN for aerod gamma in 250ml sealed polys.
LOGIN - Please login chemistry and radiochemistry into two separate lots. WRITE LOT NUMBER ON ALL COCS
CALENDAR DAYS FOR ALL TATS!! INFORM PM OF ANY TOTAL SR HIT AND PROCEED WITH SR-90 ANALYSIS ASAP!!!
Proceed with Sr-90 if gross beta is > 8.5 pCi/L Proceed with Ra-226 21 day ingrowth if TAR > 2.5 pCi/L

AS	MH	SW846	6020	SOLID, 6020, Metals 1 of 2	GK	METALS, TOTAL - 2% HCL	DQ	DOD QSM V3	PROT: A	WRK LOC	06	
CU	MH	SW846	6020	SOLID, 6020, Metals 1 of 2	GK	METALS, TOTAL - 2% HCL	DQ	DOD QSM V3	PROT: A	WRK LOC	06	
MO	MH	SW846	6020	SOLID, 6020, Metals 1 of 2	GK	METALS, TOTAL - 2% HCL	DQ	DOD QSM V3	PROT: A	WRK LOC	06	
CR	MH	SW846	6020	SOLID, 6020, Metals 1 of 2	GK	METALS, TOTAL - 2% HCL	DQ	DOD QSM V3	PROT: A	WRK LOC	06	
CO	MH	SW846	6020	SOLID, 6020, Metals 1 of 2	GK	METALS, TOTAL - 2% HCL	DQ	DOD QSM V3	PROT: A	WRK LOC	06	
CD	MH	SW846	6020	SOLID, 6020, Metals 1 of 2	GK	METALS, TOTAL - 2% HCL	DQ	DOD QSM V3	PROT: A	WRK LOC	06	
BE	MH	SW846	6020	SOLID, 6020, Metals 1 of 2	GK	METALS, TOTAL - 2% HCL	DQ	DOD QSM V3	PROT: A	WRK LOC	06	
TL	MH	SW846	6020	SOLID, 6020, Metals 1 of 2	GK	METALS, TOTAL - 2% HCL	DQ	DOD QSM V3	PROT: A	WRK LOC	06	
BA	MH	SW846	6020	SOLID, 6020, Metals 1 of 2	GK	METALS, TOTAL - 2% HCL	DQ	DOD QSM V3	PROT: A	WRK LOC	06	
AG	MH	SW846	6020	SOLID, 6020, Metals 1 of 2	GK	METALS, TOTAL - 2% HCL	DQ	DOD QSM V3	PROT: A	WRK LOC	06	
HG	O9	SW846	7471A	SOLID, 7471, Mercury 2 of 2	70	METALS, TOTAL (Method Exclusive) - Solids	DQ	DOD QSM V3	PROT: A	WRK LOC	06	
XX	QL	SW846	8270C	SOLID, 8270C, SVOC w/ PAH	13	SONICATION - Low Level	DQ	DOD QSM V3	PROT: O	WRK LOC	06	TIC: N
XX	QK	SW846	8260B	SOLID, 8260B, VOCs	15	PURGE AND TRAP - 5 mL purge	DQ	DOD QSM V3	PROT: A	WRK LOC	06	TIC: N
XX	ZV		RAD SCREEN	SOLID, RAD SCREEN	RA	IN-HOUSE RAD SCREEN	01	STANDARD TEST SET	PROT: A	WRK LOC	06	
XX	MW	CFR136 A	1664A HEM	SOLID, 1664A HEM, Oil & Grease	13	SONICATION - Low Level	B3	TETRATECH HUNTERS POINT	PROT: A	WRK LOC	06	
XX	WM	MCAW W	160.3 MOD	SOLID, 160.3 MOD, Percent Moisture	88	NO SAMPLE PREPARATION PERFORMED / DIRECT	01	STANDARD TEST SET	PROT: A	WRK LOC	06	

SAMPLE #	CLIENT SAMPLE ID	Site ID	Client Matrix	DATE/TIME SAMPLED	WORKORDER	A
3	04-PE-IR04/72-003			2011-03-31 / 1100	MGGM0	SOLID

SAMPLE COMMENTS:

XX	HS	SW846	8015 MOD	SOLID, 8015 MOD, DRO	13	SONICATION - Low Level	DQ	DOD QSM V3	PROT: O	WRK LOC	06	
XX	QH	SW846	8082	SOLID, 8082 MOD, PCBs	71	SONICATION w/ACID STRIP (PCB)	DQ	DOD QSM V3	PROT: O	WRK LOC	06	
XX	WU	SW846	8015 MOD	SOLID, 8015 MOD, GRO	15	PURGE AND TRAP - 5 mL purge	DQ	DOD QSM V3	PROT: O	WRK LOC	06	
NI	MH	SW846	6020	SOLID, 6020, Metals 1 of 2	GK	METALS, TOTAL - 2% HCL	DQ	DOD QSM V3	PROT: A	WRK LOC	06	
BA	MH	SW846	6020	SOLID, 6020, Metals 1 of 2	GK	METALS, TOTAL - 2% HCL	DQ	DOD QSM V3	PROT: A	WRK LOC	06	
VX	MH	SW846	6020	SOLID, 6020, Metals 1 of 2	GK	METALS, TOTAL - 2% HCL	DQ	DOD QSM V3	PROT: A	WRK LOC	06	
TL	MH	SW846	6020	SOLID, 6020, Metals 1 of 2	GK	METALS, TOTAL - 2% HCL	DQ	DOD QSM V3	PROT: A	WRK LOC	06	
SE	MH	SW846	6020	SOLID, 6020, Metals 1 of 2	GK	METALS, TOTAL - 2% HCL	DQ	DOD QSM V3	PROT: A	WRK LOC	06	
SB	MH	SW846	6020	SOLID, 6020, Metals 1 of 2	GK	METALS, TOTAL - 2% HCL	DQ	DOD QSM V3	PROT: A	WRK LOC	06	
PB	MH	SW846	6020	SOLID, 6020, Metals 1 of 2	GK	METALS, TOTAL - 2% HCL	DQ	DOD QSM V3	PROT: A	WRK LOC	06	
MO	MH	SW846	6020	SOLID, 6020, Metals 1 of 2	GK	METALS, TOTAL - 2% HCL	DQ	DOD QSM V3	PROT: A	WRK LOC	06	
CU	MH	SW846	6020	SOLID, 6020, Metals 1 of 2	GK	METALS, TOTAL - 2% HCL	DQ	DOD QSM V3	PROT: A	WRK LOC	06	
CR	MH	SW846	6020	SOLID, 6020, Metals 1 of 2	GK	METALS, TOTAL - 2% HCL	DQ	DOD QSM V3	PROT: A	WRK LOC	06	
CO	MH	SW846	6020	SOLID, 6020, Metals 1 of 2	GK	METALS, TOTAL - 2% HCL	DQ	DOD QSM V3	PROT: A	WRK LOC	06	
BE	MH	SW846	6020	SOLID, 6020, Metals 1 of 2	GK	METALS, TOTAL - 2% HCL	DQ	DOD QSM V3	PROT: A	WRK LOC	06	
AS	MH	SW846	6020	SOLID, 6020, Metals 1 of 2	GK	METALS, TOTAL - 2% HCL	DQ	DOD QSM V3	PROT: A	WRK LOC	06	
AG	MH	SW846	6020	SOLID, 6020, Metals 1 of 2	GK	METALS, TOTAL - 2% HCL	DQ	DOD QSM V3	PROT: A	WRK LOC	06	
ZN	MH	SW846	6020	SOLID, 6020, Metals 1 of 2	GK	METALS, TOTAL - 2% HCL	DQ	DOD QSM V3	PROT: A	WRK LOC	06	

F1D010496 CLIENT ANALYSIS SUMMARY

Storage Loc: 1-57,ENCORE

Project Manager: EKS Quote #: 88396 SDG:

Project: CTO 4 HPS 40440004

PO#: 1059241-12 Report to: Sabina Sudoko

Client: 494696 Tetra Tech EC, Inc.

Date Received: 2011-04-01
Analytical Due Date: 2011-04-13
Report Due Date: 2011-04-15
Report Type: X
#SMPS In LOT: 10 EDD Code: 00

This project requires compliance with the DOD QSM 3.0 Please refer to client Memo #4 NO RAD SCREEN for aered gamma in 250ml sealed polys.
LOGIN - Please login chemistry and radiochemistry into two separate lots. WRITE LOT NUMBER ON ALL COCS
CALENDAR DAYS FOR ALL TATS!! INFORM PM OF ANY TOTAL SR HIT AND PROCEED WITH SR-90 ANALYSIS ASAP!!!
Proceed with Sr-90 if gross beta is > 8.5 pCi/L Proceed with Ra-226 21 day ingrowth if TAR > 2.5 pCi/L

CD	MH	SW846	6020	SOLID, 6020, Metals 1 of 2	GK	METALS, TOTAL - 2% HCL	DQ	DOD QSM V3	PROT: A	WRK LOC	06	
HG	O9	SW846	7471A	SOLID, 7471, Mercury 2 of 2	70	METALS, TOTAL (Method Exclusive) - Solids	DQ	DOD QSM V3	PROT: A	WRK LOC	06	
XX	QL	SW846	8270C	SOLID, 8270C, SVOC w/ PAH	13	SONICATION - Low Level	DQ	DOD QSM V3	PROT: O	WRK LOC	06	TIC: N
XX	QK	SW846	8260B	SOLID, 8260B, VOCs	15	PURGE AND TRAP - 5 mL purge	DQ	DOD QSM V3	PROT: A	WRK LOC	06	TIC: N
XX	ZV		RAD SCREEN	SOLID, RAD SCREEN	RA	IN-HOUSE RAD SCREEN	01	STANDARD TEST SET	PROT: A	WRK LOC	06	
XX	MW	CFR136 A	1664A HEM	SOLID, 1664A HEM, Oil & Grease	13	SONICATION - Low Level	B3	TETRATECH HUNTERS POINT	PROT: A	WRK LOC	06	
XX	WM	MCAW W	160.3 MOD	SOLID, 160.3 MOD, Percent Moisture	88	NO SAMPLE PREPARATION PERFORMED / DIRECT	01	STANDARD TEST SET	PROT: A	WRK LOC	06	

SAMPLE #	CLIENT SAMPLE ID	Site ID	Client Matrix	DATE/TIME SAMPLED	WORKORDER	A
4	04-PE-IR04/72-004			2011-03-31 / 1110	MGGM1	SOLID

SAMPLE COMMENTS:

XX	HS	SW846	8015 MOD	SOLID, 8015 MOD, DRO	13	SONICATION - Low Level	DQ	DOD QSM V3	PROT: O	WRK LOC	06	
XX	QH	SW846	8082	SOLID, 8082 MOD, PCBs	71	SONICATION w/ACID STRIP (PCB)	DQ	DOD QSM V3	PROT: O	WRK LOC	06	
XX	WU	SW846	8015 MOD	SOLID, 8015 MOD, GRO	15	PURGE AND TRAP - 5 mL purge	DQ	DOD QSM V3	PROT: O	WRK LOC	06	
ZN	MH	SW846	6020	SOLID, 6020, Metals 1 of 2	GK	METALS, TOTAL - 2% HCL	DQ	DOD QSM V3	PROT: A	WRK LOC	06	
VX	MH	SW846	6020	SOLID, 6020, Metals 1 of 2	GK	METALS, TOTAL - 2% HCL	DQ	DOD QSM V3	PROT: A	WRK LOC	06	
TL	MH	SW846	6020	SOLID, 6020, Metals 1 of 2	GK	METALS, TOTAL - 2% HCL	DQ	DOD QSM V3	PROT: A	WRK LOC	06	
SE	MH	SW846	6020	SOLID, 6020, Metals 1 of 2	GK	METALS, TOTAL - 2% HCL	DQ	DOD QSM V3	PROT: A	WRK LOC	06	
SB	MH	SW846	6020	SOLID, 6020, Metals 1 of 2	GK	METALS, TOTAL - 2% HCL	DQ	DOD QSM V3	PROT: A	WRK LOC	06	
PB	MH	SW846	6020	SOLID, 6020, Metals 1 of 2	GK	METALS, TOTAL - 2% HCL	DQ	DOD QSM V3	PROT: A	WRK LOC	06	
NI	MH	SW846	6020	SOLID, 6020, Metals 1 of 2	GK	METALS, TOTAL - 2% HCL	DQ	DOD QSM V3	PROT: A	WRK LOC	06	
AS	MH	SW846	6020	SOLID, 6020, Metals 1 of 2	GK	METALS, TOTAL - 2% HCL	DQ	DOD QSM V3	PROT: A	WRK LOC	06	
AG	MH	SW846	6020	SOLID, 6020, Metals 1 of 2	GK	METALS, TOTAL - 2% HCL	DQ	DOD QSM V3	PROT: A	WRK LOC	06	
MO	MH	SW846	6020	SOLID, 6020, Metals 1 of 2	GK	METALS, TOTAL - 2% HCL	DQ	DOD QSM V3	PROT: A	WRK LOC	06	
BA	MH	SW846	6020	SOLID, 6020, Metals 1 of 2	GK	METALS, TOTAL - 2% HCL	DQ	DOD QSM V3	PROT: A	WRK LOC	06	
BE	MH	SW846	6020	SOLID, 6020, Metals 1 of 2	GK	METALS, TOTAL - 2% HCL	DQ	DOD QSM V3	PROT: A	WRK LOC	06	
CO	MH	SW846	6020	SOLID, 6020, Metals 1 of 2	GK	METALS, TOTAL - 2% HCL	DQ	DOD QSM V3	PROT: A	WRK LOC	06	
CR	MH	SW846	6020	SOLID, 6020, Metals 1 of 2	GK	METALS, TOTAL - 2% HCL	DQ	DOD QSM V3	PROT: A	WRK LOC	06	
CU	MH	SW846	6020	SOLID, 6020, Metals 1 of 2	GK	METALS, TOTAL - 2% HCL	DQ	DOD QSM V3	PROT: A	WRK LOC	06	
CD	MH	SW846	6020	SOLID, 6020, Metals 1 of 2	GK	METALS, TOTAL - 2% HCL	DQ	DOD QSM V3	PROT: A	WRK LOC	06	
HG	O9	SW846	7471A	SOLID, 7471, Mercury 2 of 2	70	METALS, TOTAL (Method Exclusive) - Solids	DQ	DOD QSM V3	PROT: A	WRK LOC	06	
XX	QL	SW846	8270C	SOLID, 8270C, SVOC w/ PAH	13	SONICATION - Low Level	DQ	DOD QSM V3	PROT: O	WRK LOC	06	TIC: N
XX	QK	SW846	8260B	SOLID, 8260B, VOCs	15	PURGE AND TRAP - 5 mL purge	DQ	DOD QSM V3	PROT: A	WRK LOC	06	TIC: N
XX	ZV		RAD SCREEN	SOLID, RAD SCREEN	RA	IN-HOUSE RAD SCREEN	01	STANDARD TEST SET	PROT: A	WRK LOC	06	
XX	MW	CFR136 A	1664A HEM	SOLID, 1664A HEM, Oil & Grease	13	SONICATION - Low Level	B3	TETRATECH HUNTERS POINT	PROT: A	WRK LOC	06	
XX	WM	MCAW W	160.3 MOD	SOLID, 160.3 MOD, Percent Moisture	88	NO SAMPLE PREPARATION PERFORMED / DIRECT	01	STANDARD TEST SET	PROT: A	WRK LOC	06	

SAMPLE #	CLIENT SAMPLE ID	Site ID	Client Matrix	DATE/TIME SAMPLED	WORKORDER	A

F1D010496 CLIENT ANALYSIS SUMMARY

Storage Loc: 1-57,ENCORE

Project Manager: EKS Quote #: 88396 SDG:

Project: CTO 4 HPS 40440004

PO#: 1059241-12 Report to: Sabina Sudoko

Client: 494696 Tetra Tech EC, Inc.

Date Received: 2011-04-01
Analytical Due Date: 2011-04-13
Report Due Date: 2011-04-15
Report Type: X
#SMPS In LOT: 10 EDD Code: 00

This project requires compliance with the DOD QSM 3.0 Please refer to client Memo #4 NO RAD SCREEN for asred gamma in 250ml sealed polys.
LOGIN - Please login chemistry and radiochemistry into two separate lots. WRITE LOT NUMBER ON ALL COCS
CALENDAR DAYS FOR ALL TATS!! INFORM PM OF ANY TOTAL SR HIT AND PROCEED WITH SR-90 ANALYSIS ASAP!!!
Proceed with Sr-90 if gross beta is > 8.5 pCi/L Proceed with Ra-226 21 day ingrowth if TAR > 2.5 pCi/L

5 04-PE-IR04/72-005 2011-03-31 / 1115 MGGM2 SOLID

SAMPLE COMMENTS:

XX	HS	SW846	8015 MOD	SOLID, 8015 MOD, DRO	13	SONICATION - Low Level	DQ	DOD QSM V3	PROT: O	WRK LOC	06		
XX	QH	SW846	8082	SOLID, 8082 MOD, PCBs	71	SONICATION w/ACID STRIP (PCB)	DQ	DOD QSM V3	PROT: O	WRK LOC	06		
XX	WU	SW846	8015 MOD	SOLID, 8015 MOD, GRO	15	PURGE AND TRAP - 5 mL purge	DQ	DOD QSM V3	PROT: O	WRK LOC	06		
CU	MH	SW846	6020	SOLID, 6020, Metals 1 of 2	GK	METALS, TOTAL - 2% HCL	DQ	DOD QSM V3	PROT: A	WRK LOC	06		
AG	MH	SW846	6020	SOLID, 6020, Metals 1 of 2	GK	METALS, TOTAL - 2% HCL	DQ	DOD QSM V3	PROT: A	WRK LOC	06		
AS	MH	SW846	6020	SOLID, 6020, Metals 1 of 2	GK	METALS, TOTAL - 2% HCL	DQ	DOD QSM V3	PROT: A	WRK LOC	06		
BA	MH	SW846	6020	SOLID, 6020, Metals 1 of 2	GK	METALS, TOTAL - 2% HCL	DQ	DOD QSM V3	PROT: A	WRK LOC	06		
BE	MH	SW846	6020	SOLID, 6020, Metals 1 of 2	GK	METALS, TOTAL - 2% HCL	DQ	DOD QSM V3	PROT: A	WRK LOC	06		
CD	MH	SW846	6020	SOLID, 6020, Metals 1 of 2	GK	METALS, TOTAL - 2% HCL	DQ	DOD QSM V3	PROT: A	WRK LOC	06		
CO	MH	SW846	6020	SOLID, 6020, Metals 1 of 2	GK	METALS, TOTAL - 2% HCL	DQ	DOD QSM V3	PROT: A	WRK LOC	06		
MO	MH	SW846	6020	SOLID, 6020, Metals 1 of 2	GK	METALS, TOTAL - 2% HCL	DQ	DOD QSM V3	PROT: A	WRK LOC	06		
NI	MH	SW846	6020	SOLID, 6020, Metals 1 of 2	GK	METALS, TOTAL - 2% HCL	DQ	DOD QSM V3	PROT: A	WRK LOC	06		
PB	MH	SW846	6020	SOLID, 6020, Metals 1 of 2	GK	METALS, TOTAL - 2% HCL	DQ	DOD QSM V3	PROT: A	WRK LOC	06		
SB	MH	SW846	6020	SOLID, 6020, Metals 1 of 2	GK	METALS, TOTAL - 2% HCL	DQ	DOD QSM V3	PROT: A	WRK LOC	06		
SE	MH	SW846	6020	SOLID, 6020, Metals 1 of 2	GK	METALS, TOTAL - 2% HCL	DQ	DOD QSM V3	PROT: A	WRK LOC	06		
TL	MH	SW846	6020	SOLID, 6020, Metals 1 of 2	GK	METALS, TOTAL - 2% HCL	DQ	DOD QSM V3	PROT: A	WRK LOC	06		
VX	MH	SW846	6020	SOLID, 6020, Metals 1 of 2	GK	METALS, TOTAL - 2% HCL	DQ	DOD QSM V3	PROT: A	WRK LOC	06		
CR	MH	SW846	6020	SOLID, 6020, Metals 1 of 2	GK	METALS, TOTAL - 2% HCL	DQ	DOD QSM V3	PROT: A	WRK LOC	06		
ZN	MH	SW846	6020	SOLID, 6020, Metals 1 of 2	GK	METALS, TOTAL - 2% HCL	DQ	DOD QSM V3	PROT: A	WRK LOC	06		
HG	O9	SW846	7471A	SOLID, 7471, Mercury 2 of 2	70	METALS, TOTAL (Method Exclusive) - Solids	DQ	DOD QSM V3	PROT: A	WRK LOC	06		
XX	QL	SW846	8270C	SOLID, 8270C, SVOC w/ PAH	13	SONICATION - Low Level	DQ	DOD QSM V3	PROT: O	WRK LOC	06	TIC: N	
XX	QK	SW846	8260B	SOLID, 8260B, VOCs	15	PURGE AND TRAP - 5 mL purge	DQ	DOD QSM V3	PROT: A	WRK LOC	06	TIC: N	
XX	ZV		RAD SCREEN	SOLID, RAD SCREEN	RA	IN-HOUSE RAD SCREEN	01	STANDARD TEST SET	PROT: A	WRK LOC	06		
XX	MW	CFR136 A	1664A HEM	SOLID, 1664A HEM, Oil & Grease	13	SONICATION - Low Level	B3	TETRATECH HUNTERS POINT	PROT: A	WRK LOC	06		
XX	WM	MCAW W	160.3 MOD	SOLID, 160.3 MOD, Percent Moisture	88	NO SAMPLE PREPARATION PERFORMED / DIRECT	01	STANDARD TEST SET	PROT: A	WRK LOC	06		

SAMPLE # CLIENT SAMPLE ID Site ID Client Matrix DATE/TIME SAMPLED WORKORDER A

6 04-PC-IR57-001 2011-03-31 / 1125 MGGM4 SOLID

SAMPLE COMMENTS:

XX	HS	SW846	8015 MOD	SOLID, 8015 MOD, DRO	13	SONICATION - Low Level	DQ	DOD QSM V3	PROT: O	WRK LOC	06		
XX	QH	SW846	8082	SOLID, 8082 MOD, PCBs	71	SONICATION w/ACID STRIP (PCB)	DQ	DOD QSM V3	PROT: O	WRK LOC	06		
NI	MH	SW846	6020	SOLID, 6020, Metals 1 of 2	GK	METALS, TOTAL - 2% HCL	DQ	DOD QSM V3	PROT: A	WRK LOC	06		
BA	MH	SW846	6020	SOLID, 6020, Metals 1 of 2	GK	METALS, TOTAL - 2% HCL	DQ	DOD QSM V3	PROT: A	WRK LOC	06		
ZN	MH	SW846	6020	SOLID, 6020, Metals 1 of 2	GK	METALS, TOTAL - 2% HCL	DQ	DOD QSM V3	PROT: A	WRK LOC	06		
VX	MH	SW846	6020	SOLID, 6020, Metals 1 of 2	GK	METALS, TOTAL - 2% HCL	DQ	DOD QSM V3	PROT: A	WRK LOC	06		
TL	MH	SW846	6020	SOLID, 6020, Metals 1 of 2	GK	METALS, TOTAL - 2% HCL	DQ	DOD QSM V3	PROT: A	WRK LOC	06		

F1D010496 CLIENT ANALYSIS SUMMARY

Storage Loc: 1-57,ENCORE

Project Manager: EKS Quote #: 88396 SDG:

Project: CTO 4 HPS 40440004

PO#: 1059241-12 Report to: Sabina Sudoko

Client: 494696 Tetra Tech EC, Inc.

#SMPS In LOT: 10

Date Received: 2011-04-01
Analytical Due Date: 2011-04-13
Report Due Date: 2011-04-15
Report Type: X
EDD Code: 00

This project requires compliance with the DOD QSM 3.0 Please refer to client Memo #4 NO RAD SCREEN for asred gamma in 250ml sealed polys.
LOGIN - Please login chemistry and radiochemistry into two separate lots. WRITE LOT NUMBER ON ALL COCS
CALENDAR DAYS FOR ALL TATS!! INFORM PM OF ANY TOTAL SR HIT AND PROCEED WITH SR-90 ANALYSIS ASAP!!!
Proceed with Sr-90 if gross beta is > 8.5 pCi/L Proceed with Ra-226 21 day ingrowth if TAR > 2.5 pCi/L

SE	MH	SW846	6020	SOLID, 6020, Metals 1 of 2	GK	METALS, TOTAL - 2% HCL	DQ	DOD QSM V3	PROT: A	WRK LOC	06		
SB	MH	SW846	6020	SOLID, 6020, Metals 1 of 2	GK	METALS, TOTAL - 2% HCL	DQ	DOD QSM V3	PROT: A	WRK LOC	06		
PB	MH	SW846	6020	SOLID, 6020, Metals 1 of 2	GK	METALS, TOTAL - 2% HCL	DQ	DOD QSM V3	PROT: A	WRK LOC	06		
MO	MH	SW846	6020	SOLID, 6020, Metals 1 of 2	GK	METALS, TOTAL - 2% HCL	DQ	DOD QSM V3	PROT: A	WRK LOC	06		
CU	MH	SW846	6020	SOLID, 6020, Metals 1 of 2	GK	METALS, TOTAL - 2% HCL	DQ	DOD QSM V3	PROT: A	WRK LOC	06		
CR	MH	SW846	6020	SOLID, 6020, Metals 1 of 2	GK	METALS, TOTAL - 2% HCL	DQ	DOD QSM V3	PROT: A	WRK LOC	06		
CO	MH	SW846	6020	SOLID, 6020, Metals 1 of 2	GK	METALS, TOTAL - 2% HCL	DQ	DOD QSM V3	PROT: A	WRK LOC	06		
BE	MH	SW846	6020	SOLID, 6020, Metals 1 of 2	GK	METALS, TOTAL - 2% HCL	DQ	DOD QSM V3	PROT: A	WRK LOC	06		
AS	MH	SW846	6020	SOLID, 6020, Metals 1 of 2	GK	METALS, TOTAL - 2% HCL	DQ	DOD QSM V3	PROT: A	WRK LOC	06		
AG	MH	SW846	6020	SOLID, 6020, Metals 1 of 2	GK	METALS, TOTAL - 2% HCL	DQ	DOD QSM V3	PROT: A	WRK LOC	06		
CD	MH	SW846	6020	SOLID, 6020, Metals 1 of 2	GK	METALS, TOTAL - 2% HCL	DQ	DOD QSM V3	PROT: A	WRK LOC	06		
HG	O9	SW846	7471A	SOLID, 7471, Mercury 2 of 2	70	METALS, TOTAL (Method Exclusive) - Solids	DQ	DOD QSM V3	PROT: A	WRK LOC	06		
XX	QL	SW846	8270C	SOLID, 8270C, SVOC w/ PAH	13	SONICATION - Low Level	DQ	DOD QSM V3	PROT: O	WRK LOC	06	TIC: N	
XX	QK	SW846	8260B	SOLID, 8260B, VOCs	15	PURGE AND TRAP - 5 mL purge	DQ	DOD QSM V3	PROT: A	WRK LOC	06	TIC: N	
XX	ZV		RAD SCREEN	SOLID, RAD SCREEN	RA	IN-HOUSE RAD SCREEN	01	STANDARD TEST SET	PROT: A	WRK LOC	06		
XX	MW	CFR136 A	1664A HEM	SOLID, 1664A HEM, Oil & Grease	13	SONICATION - Low Level	B3	TETRATECH HUNTERS POINT	PROT: A	WRK LOC	06		
XX	MX	CFR136 A	1664A SGT HEM	SOLID, 1664A SGT HEM TRPH	13	SONICATION - Low Level	B3	TETRATECH HUNTERS POINT	PROT: -	WRK LOC	06		
XX	WM	MCAW W	160.3 MOD	SOLID, 160.3 MOD, Percent Moisture	88	NO SAMPLE PREPARATION PERFORMED / DIRECT	01	STANDARD TEST SET	PROT: A	WRK LOC	06		

SAMPLE #	CLIENT SAMPLE ID	Site ID	Client Matrix	DATE/TIME SAMPLED	WORKORDER	A
7	04-PC-IR57-002			2011-03-31 / 1130	MGGNK	SOLID

SAMPLE COMMENTS:

XX	HS	SW846	8015 MOD	SOLID, 8015 MOD, DRO	13	SONICATION - Low Level	DQ	DOD QSM V3	PROT: O	WRK LOC	06		
XX	QH	SW846	8082	SOLID, 8082 MOD, PCBs	71	SONICATION w/ACID STRIP (PCB)	DQ	DOD QSM V3	PROT: O	WRK LOC	06		
ZN	MH	SW846	6020	SOLID, 6020, Metals 1 of 2	GK	METALS, TOTAL - 2% HCL	DQ	DOD QSM V3	PROT: A	WRK LOC	06		
VX	MH	SW846	6020	SOLID, 6020, Metals 1 of 2	GK	METALS, TOTAL - 2% HCL	DQ	DOD QSM V3	PROT: A	WRK LOC	06		
TL	MH	SW846	6020	SOLID, 6020, Metals 1 of 2	GK	METALS, TOTAL - 2% HCL	DQ	DOD QSM V3	PROT: A	WRK LOC	06		
SE	MH	SW846	6020	SOLID, 6020, Metals 1 of 2	GK	METALS, TOTAL - 2% HCL	DQ	DOD QSM V3	PROT: A	WRK LOC	06		
SB	MH	SW846	6020	SOLID, 6020, Metals 1 of 2	GK	METALS, TOTAL - 2% HCL	DQ	DOD QSM V3	PROT: A	WRK LOC	06		
PB	MH	SW846	6020	SOLID, 6020, Metals 1 of 2	GK	METALS, TOTAL - 2% HCL	DQ	DOD QSM V3	PROT: A	WRK LOC	06		
NI	MH	SW846	6020	SOLID, 6020, Metals 1 of 2	GK	METALS, TOTAL - 2% HCL	DQ	DOD QSM V3	PROT: A	WRK LOC	06		
AS	MH	SW846	6020	SOLID, 6020, Metals 1 of 2	GK	METALS, TOTAL - 2% HCL	DQ	DOD QSM V3	PROT: A	WRK LOC	06		
CU	MH	SW846	6020	SOLID, 6020, Metals 1 of 2	GK	METALS, TOTAL - 2% HCL	DQ	DOD QSM V3	PROT: A	WRK LOC	06		
CR	MH	SW846	6020	SOLID, 6020, Metals 1 of 2	GK	METALS, TOTAL - 2% HCL	DQ	DOD QSM V3	PROT: A	WRK LOC	06		
CO	MH	SW846	6020	SOLID, 6020, Metals 1 of 2	GK	METALS, TOTAL - 2% HCL	DQ	DOD QSM V3	PROT: A	WRK LOC	06		
CD	MH	SW846	6020	SOLID, 6020, Metals 1 of 2	GK	METALS, TOTAL - 2% HCL	DQ	DOD QSM V3	PROT: A	WRK LOC	06		
AG	MH	SW846	6020	SOLID, 6020, Metals 1 of 2	GK	METALS, TOTAL - 2% HCL	DQ	DOD QSM V3	PROT: A	WRK LOC	06		
BE	MH	SW846	6020	SOLID, 6020, Metals 1 of 2	GK	METALS, TOTAL - 2% HCL	DQ	DOD QSM V3	PROT: A	WRK LOC	06		

F1D010496 CLIENT ANALYSIS SUMMARY

Storage Loc: 1-57,ENCORE

Project Manager: EKS Quote #: 88396 SDG:

Project: CTO 4 HPS 40440004

PO#: 1059241-12 Report to: Sabina Sudoko

Client: 494696 Tetra Tech EC, Inc.

Date Received: 2011-04-01
Analytical Due Date: 2011-04-13
Report Due Date: 2011-04-15
Report Type: X
EDD Code: 00
#SMPS In LOT: 10

This project requires compliance with the DOD QSM 3.0 Please refer to client Memo #4 NO RAD SCREEN for aered gamma in 250ml sealed polys.
LOGIN - Please login chemistry and radiochemistry into two separate lots. WRITE LOT NUMBER ON ALL COCS
CALENDAR DAYS FOR ALL TATS!! INFORM PM OF ANY TOTAL SR HIT AND PROCEED WITH SR-90 ANALYSIS ASAP!!!
Proceed with Sr-90 if gross beta is > 8.5 pCi/L Proceed with Ra-226 21 day ingrowth if TAR > 2.5 pCi/L

BA	MH	SW846	6020	SOLID, 6020, Metals 1 of 2	GK	METALS, TOTAL - 2% HCL	DQ	DOD QSM V3	PROT: A	WRK LOC	06	
MO	MH	SW846	6020	SOLID, 6020, Metals 1 of 2	GK	METALS, TOTAL - 2% HCL	DQ	DOD QSM V3	PROT: A	WRK LOC	06	
HG	O9	SW846	7471A	SOLID, 7471, Mercury 2 of 2	70	METALS, TOTAL (Method Exclusive) - Solids	DQ	DOD QSM V3	PROT: A	WRK LOC	06	
XX	QL	SW846	8270C	SOLID, 8270C, SVOC w/ PAH	13	SONICATION - Low Level	DQ	DOD QSM V3	PROT: O	WRK LOC	06	TIC: N
XX	QK	SW846	8260B	SOLID, 8260B, VOCs	15	PURGE AND TRAP - 5 mL purge	DQ	DOD QSM V3	PROT: A	WRK LOC	06	TIC: N
XX	ZV		RAD SCREEN	SOLID, RAD SCREEN	RA	IN-HOUSE RAD SCREEN	01	STANDARD TEST SET	PROT: A	WRK LOC	06	
XX	MW	CFR136 A	1664A HEM	SOLID, 1664A HEM, Oil & Grease	13	SONICATION - Low Level	B3	TETRATECH HUNTERS POINT	PROT: A	WRK LOC	06	
XX	MX	CFR136 A	1664A SGT HEM	SOLID, 1664A SGT HEM TRPH	13	SONICATION - Low Level	B3	TETRATECH HUNTERS POINT	PROT: -	WRK LOC	06	
XX	WM	MCAW W	160.3 MOD	SOLID, 160.3 MOD, Percent Moisture	88	NO SAMPLE PREPARATION PERFORMED / DIRECT	01	STANDARD TEST SET	PROT: A	WRK LOC	06	

SAMPLE #	CLIENT SAMPLE ID	Site ID	Client Matrix	DATE/TIME SAMPLED	WORKORDER	A
8	04-PC-IR57-003			2011-03-31 / 1135	MGGNL	SOLID

SAMPLE COMMENTS:

XX	HS	SW846	8015 MOD	SOLID, 8015 MOD, DRO	13	SONICATION - Low Level	DQ	DOD QSM V3	PROT: O	WRK LOC	06	
XX	QH	SW846	8082	SOLID, 8082 MOD, PCBs	71	SONICATION w/ACID STRIP (PCB)	DQ	DOD QSM V3	PROT: O	WRK LOC	06	
CD	MH	SW846	6020	SOLID, 6020, Metals 1 of 2	GK	METALS, TOTAL - 2% HCL	DQ	DOD QSM V3	PROT: A	WRK LOC	06	
VX	MH	SW846	6020	SOLID, 6020, Metals 1 of 2	GK	METALS, TOTAL - 2% HCL	DQ	DOD QSM V3	PROT: A	WRK LOC	06	
TL	MH	SW846	6020	SOLID, 6020, Metals 1 of 2	GK	METALS, TOTAL - 2% HCL	DQ	DOD QSM V3	PROT: A	WRK LOC	06	
NI	MH	SW846	6020	SOLID, 6020, Metals 1 of 2	GK	METALS, TOTAL - 2% HCL	DQ	DOD QSM V3	PROT: A	WRK LOC	06	
SE	MH	SW846	6020	SOLID, 6020, Metals 1 of 2	GK	METALS, TOTAL - 2% HCL	DQ	DOD QSM V3	PROT: A	WRK LOC	06	
ZN	MH	SW846	6020	SOLID, 6020, Metals 1 of 2	GK	METALS, TOTAL - 2% HCL	DQ	DOD QSM V3	PROT: A	WRK LOC	06	
SB	MH	SW846	6020	SOLID, 6020, Metals 1 of 2	GK	METALS, TOTAL - 2% HCL	DQ	DOD QSM V3	PROT: A	WRK LOC	06	
PB	MH	SW846	6020	SOLID, 6020, Metals 1 of 2	GK	METALS, TOTAL - 2% HCL	DQ	DOD QSM V3	PROT: A	WRK LOC	06	
AG	MH	SW846	6020	SOLID, 6020, Metals 1 of 2	GK	METALS, TOTAL - 2% HCL	DQ	DOD QSM V3	PROT: A	WRK LOC	06	
CU	MH	SW846	6020	SOLID, 6020, Metals 1 of 2	GK	METALS, TOTAL - 2% HCL	DQ	DOD QSM V3	PROT: A	WRK LOC	06	
CO	MH	SW846	6020	SOLID, 6020, Metals 1 of 2	GK	METALS, TOTAL - 2% HCL	DQ	DOD QSM V3	PROT: A	WRK LOC	06	
BE	MH	SW846	6020	SOLID, 6020, Metals 1 of 2	GK	METALS, TOTAL - 2% HCL	DQ	DOD QSM V3	PROT: A	WRK LOC	06	
BA	MH	SW846	6020	SOLID, 6020, Metals 1 of 2	GK	METALS, TOTAL - 2% HCL	DQ	DOD QSM V3	PROT: A	WRK LOC	06	
AS	MH	SW846	6020	SOLID, 6020, Metals 1 of 2	GK	METALS, TOTAL - 2% HCL	DQ	DOD QSM V3	PROT: A	WRK LOC	06	
MO	MH	SW846	6020	SOLID, 6020, Metals 1 of 2	GK	METALS, TOTAL - 2% HCL	DQ	DOD QSM V3	PROT: A	WRK LOC	06	
CR	MH	SW846	6020	SOLID, 6020, Metals 1 of 2	GK	METALS, TOTAL - 2% HCL	DQ	DOD QSM V3	PROT: A	WRK LOC	06	
HG	O9	SW846	7471A	SOLID, 7471, Mercury 2 of 2	70	METALS, TOTAL (Method Exclusive) - Solids	DQ	DOD QSM V3	PROT: A	WRK LOC	06	
XX	QL	SW846	8270C	SOLID, 8270C, SVOC w/ PAH	13	SONICATION - Low Level	DQ	DOD QSM V3	PROT: O	WRK LOC	06	TIC: N
XX	QK	SW846	8260B	SOLID, 8260B, VOCs	15	PURGE AND TRAP - 5 mL purge	DQ	DOD QSM V3	PROT: A	WRK LOC	06	TIC: N
XX	ZV		RAD SCREEN	SOLID, RAD SCREEN	RA	IN-HOUSE RAD SCREEN	01	STANDARD TEST SET	PROT: A	WRK LOC	06	
XX	MW	CFR136 A	1664A HEM	SOLID, 1664A HEM, Oil & Grease	13	SONICATION - Low Level	B3	TETRATECH HUNTERS POINT	PROT: A	WRK LOC	06	
XX	MX	CFR136 A	1664A SGT HEM	SOLID, 1664A SGT HEM TRPH	13	SONICATION - Low Level	B3	TETRATECH HUNTERS POINT	PROT: -	WRK LOC	06	
XX	WM	MCAW W	160.3 MOD	SOLID, 160.3 MOD, Percent Moisture	88	NO SAMPLE PREPARATION PERFORMED / DIRECT	01	STANDARD TEST SET	PROT: A	WRK LOC	06	

F1D010496 CLIENT ANALYSIS SUMMARY

Storage Loc: 1-57,ENCORE

Project Manager: EKS Quote #: 88396 SDG:

Project: CTO 4 HPS 40440004

PO#: 1059241-12 Report to: Sabina Sudoko

Client: 494696 Tetra Tech EC, Inc.

#SMPS In LOT: 10

Date Received: 2011-04-01

Analytical Due Date: 2011-04-13

Report Due Date: 2011-04-15

Report Type: X

EDD Code: 00

This project requires compliance with the DOD QSM 3.0 Please refer to client Memo #4 NO RAD SCREEN for asred gamma in 250ml sealed polys.

LOGIN - Please login chemistry and radiochemistry into two separate lots. WRITE LOT NUMBER ON ALL COCS

CALENDAR DAYS FOR ALL TATS!! INFORM PM OF ANY TOTAL SR HIT AND PROCEED WITH SR-90 ANALYSIS ASAP!!!

Proceed with Sr-90 if gross beta is > 8.5 pCi/L Proceed with Ra-226 21 day ingrowth if TAR > 2.5 pCi/L

SAMPLE #	CLIENT SAMPLE ID	Site ID	Client Matrix	DATE/TIME SAMPLED	WORKORDER	A
9	04-PC-IR57-004			2011-03-31 / 1140	MGGNN	SOLID

SAMPLE COMMENTS:

XX	HS	SW846	8015 MOD	SOLID, 8015 MOD, DRO ✓	13	SONICATION - Low Level	DQ	DOD QSM V3	PROT: O	WRK LOC	06		
XX	QH	SW846	8082	SOLID, 8082 MOD, PCBs ✓	71	SONICATION w/ACID STRIP (PCB)	DQ	DOD QSM V3	PROT: O	WRK LOC	06		
BA	MH	SW846	6020	SOLID, 6020, Metals 1 of 2 ✓	GK	METALS, TOTAL - 2% HCL	DQ	DOD QSM V3	PROT: A	WRK LOC	06		
NI	MH	SW846	6020	SOLID, 6020, Metals 1 of 2	GK	METALS, TOTAL - 2% HCL	DQ	DOD QSM V3	PROT: A	WRK LOC	06		
VX	MH	SW846	6020	SOLID, 6020, Metals 1 of 2	GK	METALS, TOTAL - 2% HCL	DQ	DOD QSM V3	PROT: A	WRK LOC	06		
TL	MH	SW846	6020	SOLID, 6020, Metals 1 of 2	GK	METALS, TOTAL - 2% HCL	DQ	DOD QSM V3	PROT: A	WRK LOC	06		
SE	MH	SW846	6020	SOLID, 6020, Metals 1 of 2	GK	METALS, TOTAL - 2% HCL	DQ	DOD QSM V3	PROT: A	WRK LOC	06		
SB	MH	SW846	6020	SOLID, 6020, Metals 1 of 2	GK	METALS, TOTAL - 2% HCL	DQ	DOD QSM V3	PROT: A	WRK LOC	06		
PB	MH	SW846	6020	SOLID, 6020, Metals 1 of 2	GK	METALS, TOTAL - 2% HCL	DQ	DOD QSM V3	PROT: A	WRK LOC	06		
MO	MH	SW846	6020	SOLID, 6020, Metals 1 of 2	GK	METALS, TOTAL - 2% HCL	DQ	DOD QSM V3	PROT: A	WRK LOC	06		
CU	MH	SW846	6020	SOLID, 6020, Metals 1 of 2	GK	METALS, TOTAL - 2% HCL	DQ	DOD QSM V3	PROT: A	WRK LOC	06		
CR	MH	SW846	6020	SOLID, 6020, Metals 1 of 2	GK	METALS, TOTAL - 2% HCL	DQ	DOD QSM V3	PROT: A	WRK LOC	06		
CO	MH	SW846	6020	SOLID, 6020, Metals 1 of 2	GK	METALS, TOTAL - 2% HCL	DQ	DOD QSM V3	PROT: A	WRK LOC	06		
BE	MH	SW846	6020	SOLID, 6020, Metals 1 of 2	GK	METALS, TOTAL - 2% HCL	DQ	DOD QSM V3	PROT: A	WRK LOC	06		
AS	MH	SW846	6020	SOLID, 6020, Metals 1 of 2	GK	METALS, TOTAL - 2% HCL	DQ	DOD QSM V3	PROT: A	WRK LOC	06		
AG	MH	SW846	6020	SOLID, 6020, Metals 1 of 2	GK	METALS, TOTAL - 2% HCL	DQ	DOD QSM V3	PROT: A	WRK LOC	06		
ZN	MH	SW846	6020	SOLID, 6020, Metals 1 of 2	GK	METALS, TOTAL - 2% HCL	DQ	DOD QSM V3	PROT: A	WRK LOC	06		
CD	MH	SW846	6020	SOLID, 6020, Metals 1 of 2	GK	METALS, TOTAL - 2% HCL	DQ	DOD QSM V3	PROT: A	WRK LOC	06		
HG	O9	SW846	7471A	SOLID, 7471, Mercury 2 of 2	70	METALS, TOTAL (Method Exclusive) - Solids	DQ	DOD QSM V3	PROT: A	WRK LOC	06		
XX	QL	SW846	8270C	SOLID, 8270C, SVOC w/ PAH ✓	13	SONICATION - Low Level	DQ	DOD QSM V3	PROT: O	WRK LOC	06	TIC: N	
XX	QK	SW846	8260B	SOLID, 8260B, VOCs ✓	15	PURGE AND TRAP - 5 mL purge	DQ	DOD QSM V3	PROT: A	WRK LOC	06	TIC: N	
XX	ZV		RAD SCREEN	SOLID, RAD SCREEN	RA	IN-HOUSE RAD SCREEN	01	STANDARD TEST SET	PROT: A	WRK LOC	06		
XX	MW	CFR136 A	1664A HEM	SOLID, 1664A HEM, Oil & Grease ✓	13	SONICATION - Low Level	B3	TETRATECH HUNTERS POINT	PROT: A	WRK LOC	06		
XX	MX	CFR136 A	1664A SGT HEM	SOLID, 1664A SGT HEM TRPH ✓	13	SONICATION - Low Level	B3	TETRATECH HUNTERS POINT	PROT: -	WRK LOC	06		
XX	WM	MCAW W	160.3 MOD	SOLID, 160.3 MOD, Percent Moisture	88	NO SAMPLE PREPARATION PERFORMED / DIRECT	01	STANDARD TEST SET	PROT: A	WRK LOC	06		

SAMPLE #	CLIENT SAMPLE ID	Site ID	Client Matrix	DATE/TIME SAMPLED	WORKORDER	A
10	04-PC-IR57-005			2011-03-31 / 1150	MGGNP	SOLID

SAMPLE COMMENTS:

XX	HS	SW846	8015 MOD	SOLID, 8015 MOD, DRO ✓	13	SONICATION - Low Level	DQ	DOD QSM V3	PROT: O	WRK LOC	06		
XX	QH	SW846	8082	SOLID, 8082 MOD, PCBs ✓	71	SONICATION w/ACID STRIP (PCB)	DQ	DOD QSM V3	PROT: O	WRK LOC	06		
NI	MH	SW846	6020	SOLID, 6020, Metals 1 of 2 ✓	GK	METALS, TOTAL - 2% HCL	DQ	DOD QSM V3	PROT: A	WRK LOC	06		
VX	MH	SW846	6020	SOLID, 6020, Metals 1 of 2	GK	METALS, TOTAL - 2% HCL	DQ	DOD QSM V3	PROT: A	WRK LOC	06		
TL	MH	SW846	6020	SOLID, 6020, Metals 1 of 2	GK	METALS, TOTAL - 2% HCL	DQ	DOD QSM V3	PROT: A	WRK LOC	06		
SE	MH	SW846	6020	SOLID, 6020, Metals 1 of 2	GK	METALS, TOTAL - 2% HCL	DQ	DOD QSM V3	PROT: A	WRK LOC	06		

F1D010496

CLIENT ANALYSIS SUMMARY

Storage Loc: 1-57,ENCORE

Project Manager: EKS | Quote #: 88396 | SDG:

Project: CTO 4 | HPS 40440004

PO#: 1059241-12 | Report to: Sabina Sudoko

Client: 494696 Tetra Tech EC, Inc.

Date Received: 2011-04-01
Analytical Due Date: 2011-04-13
Report Due Date: 2011-04-15
Report Type: X
EDD Code: 00
#SMPS in LOT: 10

This project requires compliance with the DOD QSM 3.0 Please refer to client Memo #4 NO RAD SCREEN for asred gamma in 250ml sealed polys.
LOGIN - Please login chemistry and radiochemistry into two separate lots. WRITE LOT NUMBER ON ALL COCS
CALENDAR DAYS FOR ALL TATS!! INFORM PM OF ANY TOTAL SR HIT AND PROCEED WITH SR-90 ANALYSIS ASAP!!!
Proceed with Sr-90 if gross beta is > 8.5 pCi/L. Proceed with Ra-226 21 day ingrowth if TAR > 2.5 pCi/L

PB	MH	SW846	6020	SOLID, 6020, Metals 1 of 2	GK	METALS, TOTAL - 2% HCL	DQ	DOD QSM V3	PROT: A	WRK LOC	06		
MO	MH	SW846	6020	SOLID, 6020, Metals 1 of 2	GK	METALS, TOTAL - 2% HCL	DQ	DOD QSM V3	PROT: A	WRK LOC	06		
AS	MH	SW846	6020	SOLID, 6020, Metals 1 of 2	GK	METALS, TOTAL - 2% HCL	DQ	DOD QSM V3	PROT: A	WRK LOC	06		
ZN	MH	SW846	6020	SOLID, 6020, Metals 1 of 2	GK	METALS, TOTAL - 2% HCL	DQ	DOD QSM V3	PROT: A	WRK LOC	06		
SB	MH	SW846	6020	SOLID, 6020, Metals 1 of 2	GK	METALS, TOTAL - 2% HCL	DQ	DOD QSM V3	PROT: A	WRK LOC	06		
AG	MH	SW846	6020	SOLID, 6020, Metals 1 of 2	GK	METALS, TOTAL - 2% HCL	DQ	DOD QSM V3	PROT: A	WRK LOC	06		
BA	MH	SW846	6020	SOLID, 6020, Metals 1 of 2	GK	METALS, TOTAL - 2% HCL	DQ	DOD QSM V3	PROT: A	WRK LOC	06		
BE	MH	SW846	6020	SOLID, 6020, Metals 1 of 2	GK	METALS, TOTAL - 2% HCL	DQ	DOD QSM V3	PROT: A	WRK LOC	06		
CD	MH	SW846	6020	SOLID, 6020, Metals 1 of 2	GK	METALS, TOTAL - 2% HCL	DQ	DOD QSM V3	PROT: A	WRK LOC	06		
CO	MH	SW846	6020	SOLID, 6020, Metals 1 of 2	GK	METALS, TOTAL - 2% HCL	DQ	DOD QSM V3	PROT: A	WRK LOC	06		
CR	MH	SW846	6020	SOLID, 6020, Metals 1 of 2	GK	METALS, TOTAL - 2% HCL	DQ	DOD QSM V3	PROT: A	WRK LOC	06		
CU	MH	SW846	6020	SOLID, 6020, Metals 1 of 2	GK	METALS, TOTAL - 2% HCL	DQ	DOD QSM V3	PROT: A	WRK LOC	06		
HG	O9	SW846	7471A	SOLID, 7471, Mercury 2 of 2	70	METALS, TOTAL (Method Exclusive) - Solids	DQ	DOD QSM V3	PROT: A	WRK LOC	06		
XX	QL	SW846	8270C	SOLID, 8270C, SVOC w/ PAH	13	SONICATION - Low Level	DQ	DOD QSM V3	PROT: O	WRK LOC	06	TIC: N	
XX	QK	SW846	8260B	SOLID, 8260B, VOCs	15	PURGE AND TRAP - 5 mL purge	DQ	DOD QSM V3	PROT: A	WRK LOC	06	TIC: N	
XX	ZV		RAD SCREEN	SOLID, RAD SCREEN	RA	IN-HOUSE RAD SCREEN	01	STANDARD TEST SET	PROT: A	WRK LOC	06		
XX	MW	CFR136 A	1664A HEM	SOLID, 1664A HEM, Oil & Grease	13	SONICATION - Low Level	B3	TETRATECH HUNTERS POINT	PROT: A	WRK LOC	06		
XX	MX	CFR136 A	1664A SGT HEM	SOLID, 1664A SGT HEM TRPH	13	SONICATION - Low Level	B3	TETRATECH HUNTERS POINT	PROT: -	WRK LOC	06		
XX	WM	MCAW W	160.3 MOD	SOLID, 160.3 MOD, Percent Moisture	88	NO SAMPLE PREPARATION PERFORMED / DIRECT	01	STANDARD TEST SET	PROT: A	WRK LOC	06		

TETRA TECH
1230 Columbia Street, Suite 500
San Diego, CA 92101 (619) 234-8696

curlde

TestAmerica St. Louis NUMBER 25069

CHAIN-OF-CUSTODY RECORD

PROJECT NAME: HUNTERS POINT	PURCHASE ORDER NO.: 1059241-12
PROJECT LOCATION: SAN FRANCISCO, CA	PROJECT NO.: 40004 0400
SAMPLER NAME: ANDROW GORMAN	AIRBILL NUMBER: 8742387477 65
PROJECT CONTACT: SABINA SUDOMO	PROJECT CONTACT PHONE NUMBER: 949.809.5022

LABORATORY NAME: TEST AMERICA ST. LOUIS

LABORATORY ID (FOR LABORATORY):

ANALYSES REQUIRED

SAMPLE ID	DATE COLLECTED	TIME COLLECTED	NO. OF CONTAINER	LEVEL 3	LEVEL 4	TYPE	TAT	VOCs	SVOC + SIM for PAHs	PCBs	TOG	METALS	TPH-D	TPH-G	TRPH 1664	SVOC	COMMENTS
04.PE.IR04/72.001	3.31.11	1040	8	X		5		X	X	X	X	X	X	X			2x250g, 6xe
04.PE.IR04/72.002		1050	8	X				X	X	X	X	X	X	X			
04.PE.IR04/72.003		1100	8	X				X	X	X	X	X	X	X			
04.PE.IR04/72.004		1110	8	X				X	X	X	X	X	X	X			
04.PE.IR04/72.005		1115	8	X				X	X	X	X	X	X	X			
04.PC.IR57.001		1125	5	X				X		X	X	X	X		X	X	3xenc
04.PC.IR57.002		1130	5	X				X		X	X	X	X		X	X	
04.PC.IR57.003		1135	5	X				X		X	X	X	X		X	X	
04.PC.IR57.004		1140	5	X				X		X	X	X	X		X	X	
04.PC.IR57.005		1150	5	X				X		X	X	X	X		X	X	

RELINQUISHED BY (Signature)	DATE 3.31.11	RECEIVED BY (Signature)	LABORATORY INSTRUCTIONS/COMMENTS
COMPANY TTOC	TIME 1620	COMPANY FEDEX	
RELINQUISHED BY (Signature)	DATE 4.1.11	RECEIVED BY (Signature) Jill Clarke	COMPOSITE DESCRIPTION
COMPANY	TIME 0915	COMPANY TA	
RELINQUISHED BY (Signature)	DATE	RECEIVED BY (Signature)	SAMPLE CONDITION UPON RECEIPT (FOR LABORATORY)
COMPANY	TIME	COMPANY	TEMPERATURE: ____ SAMPLE CONDITION: ☐ INTACT ☐ BROKE COOLER SEAL: ☐ INTACT ☐ BROKEN

White - Laboratory; Pink - Laboratory; Canary - Project File; Manila - Data Management

TestAmerica

THE LEADER IN ENVIRONMENTAL TESTING

Lot #(s): F1D010496 TestAmerica St. Louis

CONDITION UPON RECEIPT FORM

Client: Tetra Tech

Quote No: 88396

COC/RFA No: 250109 66

Initiated By: [signature] Date: 4.1.11 Time: 0915

Shipping Information

Shipper: FedEx UPS DHL Courier Client Other: _____ Multiple Packages: Y N

Shipping # (s):*

1. TRK# 0215 8742 3874 7765
2.
3.
4.
5.
6.
7.
8.
9.
10.

Sample Temperature (s):**

1. 3
2.
3.
4.
5.
6.
7.
8.
9.
10.

*Numbered shipping lines correspond to Numbered Sample Temp lines

**Sample must be received at 4°C ± 2°C- If not, note contents below. Temperature variance does NOT affect the following: Metals-Liquid or Rad tests- Liquid or Solids

Condition (Circle "Y" for yes, "N" for no and "N/A" for not applicable):

1.	Y N	Are there custody seals present on the cooler?	8.	Y N	Are there custody seals present on bottles?
2.	Y N N/A	Do custody seals on cooler appear to be tampered with?	9.	Y N N/A	Do custody seals on bottles appear to be tampered with?
3.	Y N	Were contents of cooler frisked after opening, but before unpacking?	10.	Y N N/A	Was sample received with proper pH[1]? (If not, make note below)
4.	Y N	Sample received with Chain of Custody?	11.	Y N	Sample received in proper containers?
5.	Y N N/A	Does the Chain of Custody match sample ID's on the container(s)?	12.	Y N N/A	Headspace in VOA or TOX liquid samples? (If Yes, note sample ID's below)
6.	Y N	Was sample received broken?	13.	Y N N/A	Was Internal COC/Workshare received?
7.	Y N	Is sample volume sufficient for analysis?	14.	Y N N/A	Was pH taken by original TestAmerica lab?

[1] For DOE-AL (Pantex, LANL, Sandia) sites, pH of ALL containers received must be verified, EXCEPT VOA, TOX and soils.

Notes:

Corrective Action:

- ☐ Client Contact Name: _____ Informed by: _____
- ☐ Sample(s) processed "as is"
- ☐ Sample(s) on hold until: _____ If released, notify: _____

Project Management Review: [signature] Date: 4/5/11

THIS FORM MUST BE COMPLETED AT THE TIME THE ITEMS ARE BEING CHECKED IN. IF ANY ITEM IS COMPLETED BY SOMEONE OTHER THAN THE INITIATOR, THEN THAT PERSON IS REQUIRED TO APPLY THEIR INITIAL AND THE DATE NEXT TO THAT ITEM.

ADMIN-0004, REVISED 10/21/08 \\Slsvr01\QA\FORMS\ST-LOUIS\ADMIN\Admin004 rev11.doc

STORM/SEWER PIPE EXCAVATION
IR Site Stockpile Tracking and Disposition

Hunters Point Shipyard	Parcel E

Selected laboratory analyses are based on (*check all that apply*):
- ☒ IR Site # 56
- SAP Chemicals of Concern
- ☐ Construction Summary Report
- ☐ CSR Addendum

Chemical Stockpile Sampling

Unit No.	Unit Volume	COC No.	Date Sampled	Date Shipped
0270-56	243 yd^3	25157	6/2/2010	6/2/2010

Analytical Results

Date Analytical Results Received: 6/25/2010	Reviewed By: Sabina Sudoko/Rick Weingarz

- ☐ Material meets industrial PRG/HPAL criteria but exceeds residential PRG criteria
- ☐ Material meets residential PRG criteria
- ☒ Material exceeds industrial PRG/HPAL criteria
- ☒ All analytical results are attached

Comments/Elevated Concentrations:

See attached E-mail and data

Final Disposition

- ☐ Industrial/Open Space Backfill
- ☐ Residential Backfill
- ☒ Contaminated

Comments/Explanation:

Approval

Project Manager/Designee (signature):	Date: 6/28/2010

TETRA TECH EC, INC.

Weingarz, Richard

From: Sudoko, Sabina
Sent: Monday, June 28, 2010 9:50 AM
To: Weingarz, Richard; Gorman, Andrew
Subject: Cto 3- chem - IR56- F0F030505

Greetings,

Data for the above SDG is in SharePoint - chem folder

Cto3_IR56_Stockpile_F0F030505_060310_062810

The data has been reviewed against the "Project Action Limits" listed in Worksheet #15 of the Hunters Point Shipyard Final SAP Appendix A Revision 4 (October 9, 2009). All results are below action levels (for analytes that have an action level listed) with the exception of the following:

SVOC - SIMS

- benzo (a) pyrene in sample -005 (03-PE-IR56-005) exceeded the action levels of 210 ug/kg.

Metals

- arsenic in samples -001 thru -003 were at the action levels of 1.6 mg/kg and samples -004 and -005 exceeded action level of 1.6 mg/kg.

Thank You..

Sabina R. Sudoko | **Chemist** NOTE NEW ADDRESS / PHONE NUMBER
Direct: 949.809.5022 | Fax: 949.809.5004
sabina.sudoko@tetratech.com

Tetra Tech EC | Sciences
17885 Von Karman Ave., Suite 500 | Irvine, CA 92614 - 6213 | www.tetratech.com

PLEASE NOTE: This message, including any attachments, may include confidential and/or inside information. Any distribution or use of this communication by anyone other than the intended recipient is strictly prohibited and may be unlawful. If you are not the intended recipient, please notify the sender by replying to this message and then delete it from your system.

Think Green - Not every email needs to be printed.

TETRA TECH

CHAIN-OF-CUSTODY RECORD

NUMBER 25157

NUMBERED

PROJECT NAME	HUNTERS POINT
PROJECT LOCATION	SAN FRANCISCO CA
SAMPLER NAME	ANDREW GERMAN
PROJECT MANAGER	JASINA SUDOKU
PROJECT GROUP NO	1036773-9
PROJECT NO	3670-003
PROJECT TELEPHONE	8718705 3373
PROJECT MANAGER TELEPHONE NUMBER	949-809-5022
LABORATORY NAME	TEST AMERICA
LABORATORY ID	FOF030505

ANALYSES REQUIRED: TPH-GRO (GC/FID/MS); EPA 8270 (SVOC); EPA 8260 (VOC); EPA 8141 (OPP); EPA 8151 (HERB); EPA 6010 (MET); EPA 8260 (VOC)

Project Information Section
Do not submit to Laboratory

6-17

SAMPLE ID	DATE SAMPLED	TIME SAMPLED	# OF CONTAINERS	MATRIX				TPH-GRO (GC/FID/MS)	EPA 8270 (SVOC)	EPA 8260 (VOC)	EPA 8141 (OPP)	EPA 8151 (HERB)	EPA 6010 (MET)	EPA 8260 (VOC)			COMMENTS	LOCATION	DEPTH START	DEPTH END	
03 PE IR56-001	6-02-10	1105	5	X		5	10 day	X	X		X	X	X					22.26 [illegible] FILE 270	0'	3'	N
03 PE IR56-002	6-02-10	1110	5	X		5	10 day	X	X		X	X	X						0'	3'	N
03 PE IR56-003	6-02-10	1120	5	X		5	10 day	X	X		X	X	X						0'	3'	N
03 PE IR56-004	6-02-10	1125	5	X		5	10 day	X	X		X	X	X						0'	3'	N
03 PE IR56-005	6-02-10	1130	5	X		5	10 day	X	X		X	X	X						0'	3'	N

RELINQUISHED BY (Signature)	DATE 6-2-10	RECEIVED BY (Signature)	LABORATORY INSPECTION/COMMENTS
COMPANY TTEC	TIME 19:00	COMPANY FEDEX	
RELINQUISHED BY (Signature)	DATE	RECEIVED BY (Signature)	COMPOSITE DESCRIPTION
COMPANY	TIME	COMPANY	
RELINQUISHED BY (Signature)	DATE	RECEIVED BY (Signature)	
COMPANY	TIME	COMPANY	

SAMPLING COMMENT

White - Laboratory; Pink - Laboratory; Canary - Project File; Marsh - Data Management

TestAmerica
THE LEADER IN ENVIRONMENTAL TESTING

TestAmerica Laboratories, Inc.

ANALYTICAL REPORT

PROJECT NO. CTO3

HPS

Lot #: F0F030505

Sabina Sudoko

Tetra Tech EC, Inc.
17885 Von Karman Avenue
Suite 500
Irvine, CA 92614

TESTAMERICA LABORATORIES, INC.

Ivan Vania
Project Manager

June 25, 2010

Case Narrative
LOT NUMBER: F0F030505

This report contains the analytical results for the five samples received under chain of custody by TestAmerica St. Louis on June 3, 2010. These samples are associated with your HPS 3670.003 project.

The analytical results included in this report meet all applicable quality control procedure requirements except as noted in the narrative.

The test results in this report meet all NELAP requirements for parameters in which accreditations are held by TestAmerica St. Louis. Any exceptions to NELAP requirements are noted in the case narrative. **TestAmerica St. Louis' Florida certification number is E87689.** The case narrative is an integral part of this report.

This report shall not be reproduced, except in full, without the written approval of the laboratory.

RPD and RER results that are outside QC limits for non-detected analytes are statistically invalid. Non-detect results were duplicated, and the RPD/RER can be ignored.

Sample receiving issues are noted on the CUR form and written communications pertaining to these issues are included in the CoC section of the report.

All chemical analysis results are based upon sample as received, wet weight, unless noted otherwise. Ra-226 analysis by gamma spectroscopy is performed on an as-received basis unless sample containers were received cracked or broken. Analysis parameters for cracked or broken samples will be listed in the narrative.

Ra-226 results analyzed by method EPA 901.1 MOD were calculated and reported from the 46.09 percent abundant 609.31 KeV line of Bi-214.

Observations/Nonconformances

Reference the chain of custody and condition upon receipt report for any variations on receipt conditions and temperature of samples on receipt.

Volatile Organics by GC/MS (SW-846 8260B)

Batch 0159267:
The CCV recovery was outside the upper QC limit (greater than 20% D) for Acrolein, Iodomethane, and Pentachloroethane indicating a potential high bias for those analytes in the samples associated with this CCV. These analytes were not detected above the reporting limits or were not target analytes in the associated samples.
Affected Samples:
F0F030505 (1): 03-PE-IR56-001
F0F030505 (2): 03-PE-IR56-002
F0F030505 (3): 03-PE-IR56-003
F0F030505 (4): 03-PE-IR56-004
F0F030505 (5): 03-PE-IR56-005

Batch 0159267:
Methylene chloride was observed in the method blank above the reporting limits. Methylene chloride is a recognized potential laboratory contaminant. Concentrations up to five times the level observed in the method blank, in associated laboratory samples, may be attributed to its presence in the laboratory.
Affected Samples:
F0F030505 (1): 03-PE-IR56-001
F0F030505 (2): 03-PE-IR56-002
F0F030505 (3): 03-PE-IR56-003
F0F030505 (4): 03-PE-IR56-004
F0F030505 (5): 03-PE-IR56-005

Batch 0159267:
The MS/MSD recoveries for 1,1-Dichloroethene and MSD recovery for Toluene are outside the upper QC limit, indicating a potential positive bias for the analytes. The analytes were not observed above the reporting limits in the associated samples.
Affected Samples:
F0F030505 (1): 03-PE-IR56-001
F0F030505 (2): 03-PE-IR56-002
F0F030505 (3): 03-PE-IR56-003
F0F030505 (4): 03-PE-IR56-004
F0F030505 (5): 03-PE-IR56-005

Batch 0159267:
The surrogate(s) recovery is outside the upper QC limit, indicating a potential positive bias. There were no target analytes associated with this surrogate observed above the reporting limits in the sample.
Affected Samples:
F0F030505 (5): 03-PE-IR56-005

Batch 0159267:
The internal standard recovery for 1,4Dichlorobenzene-d4 is outside the lower QC limit, indicating a potential positive bias. There were no target analytes associated with this internal standard observed above the reporting limits in the samples.
Affected Samples:
F0F030505 (4): 03-PE-IR56-004
F0F030505 (5): 03-PE-IR56-005

Semivolatile Organic Compounds by GC/MS (SW-846 8270C)

Batch 0158057:
The CCV recovery was outside the upper QC limit (greater than 20% RSD) for Cyclohexanol, 2,2-oxybis(1-chloropropane),2-Nitroaniline, 4-Nitrophenol, Azobenzene, Bis(2-ethylhexyl)phthalate, and Di-n-octylphthalate indicating a potential high bias for those analytes in the samples associated with this CCV. These analytes were not detected above the reporting limits or were not target analytes in the associated samples.
Affected Samples:
F0F030505 (1): 03-PE-IR56-001
F0F030505 (2): 03-PE-IR56-002
F0F030505 (3): 03-PE-IR56-003
F0F030505 (4): 03-PE-IR56-004
F0F030505 (5): 03-PE-IR56-005

PAHs by 8270C SIM (8270SIM)

Chrysene recovered slightly low in the ICV for DoD criteria (20.66%) giving this compound a possible low bias in the samples associated with this ICV. The data is reported with narrative comment.
Affected Samples:
F0F030505 (1): 03-PE-IR56-001
F0F030505 (2): 03-PE-IR56-002
F0F030505 (3): 03-PE-IR56-003
F0F030505 (4): 03-PE-IR56-004
F0F030505 (5): 03-PE-IR56-005

Batch 0158127:
The CCV recovered Benzo(b)fluoranthene, Benzo(a)pyrene, and Indeno(1,2,3-cd)pyrene above QC criteria giving these compounds a potential high bias in the samples associated with this CCV. The following samples were either not detected or not target compounds.
For F0F160448-004, Benzo(a)pyrene recovered above the range of the SIM curve. However, this sample will be confirmed on a scan run where this analyte hit will fall within the range of the initial calibration.
Affected Samples:
F0F030505 (1): 03-PE-IR56-001
F0F030505 (2): 03-PE-IR56-002
F0F030505 (3): 03-PE-IR56-003
F0F030505 (4): 03-PE-IR56-004
F0F030505 (5): 03-PE-IR56-005

Mercury in Solid Waste (Manual Cold Vapor) (SW-846 7471A)

Batch 0165252:
The MS (MSD) recoveries for mercury are outside the established QC limits. The RPD is within method acceptance criteria indicating possible matrix interference. Method performance is demonstrated by acceptable LCS recovery.
Affected Samples:
F0F030505 (1): 03-PE-IR56-001
F0F030505 (2): 03-PE-IR56-002
F0F030505 (3): 03-PE-IR56-003
F0F030505 (4): 03-PE-IR56-004
F0F030505 (5): 03-PE-IR56-005

Batch 0165252:
Mercury was removed from the 0.5ppb calibration point due to poor response. The initial calibration still meets the minimum number of points and the reporting limits required. The compounds were removed within TestAmerica's selection of points policy.
Affected Samples:
F0F030505 (1): 03-PE-IR56-001
F0F030505 (2): 03-PE-IR56-002
F0F030505 (3): 03-PE-IR56-003
F0F030505 (4): 03-PE-IR56-004
F0F030505 (5): 03-PE-IR56-005

ICP-MS (SW846-6020)

Batch 0158108:
The MS (MSD) recoveries for nickel are outside the established QC limits. The analyte concentration in the original sample is greater than four times the amount spiked, making percent recovery information ineffective. Method performance is demonstrated by acceptable LCS recovery.
Affected Samples:
F0F030505 (1): 03-PE-IR56-001
F0F030505 (2): 03-PE-IR56-002
F0F030505 (3): 03-PE-IR56-003
F0F030505 (4): 03-PE-IR56-004
F0F030505 (5): 03-PE-IR56-005

Batch 0158108:
The MS (MSD) recoveries for antimony, selenium, and chromium are outside the established QC limits. The RPD is within method acceptance criteria indicating possible matrix interference. Method performance is demonstrated by acceptable LCS recovery.
Affected Samples:
F0F030505 (1): 03-PE-IR56-001
F0F030505 (2): 03-PE-IR56-002
F0F030505 (3): 03-PE-IR56-003
F0F030505 (4): 03-PE-IR56-004
F0F030505 (5): 03-PE-IR56-005

Batch 0158108:
The MS recovery for copper, lead and zinc is outside the established QC limits. The RPD for the MS/MSD is outside QC limits. Matrix interference is physically evident in the sample. Method performance is demonstrated by acceptable LCS recovery.
Affected Samples:
F0F030505 (1): 03-PE-IR56-001
F0F030505 (2): 03-PE-IR56-002
F0F030505 (3): 03-PE-IR56-003
F0F030505 (4): 03-PE-IR56-004
F0F030505 (5): 03-PE-IR56-005

Batch 0158108:
The LLC was outside upper QC limits (greater than 120%) for copper. The concentration of these analytes in the samples was at such a high level as to make the LLC unnecessary.
Affected Samples:
F0F030505 (1): 03-PE-IR56-001
F0F030505 (2): 03-PE-IR56-002
F0F030505 (3): 03-PE-IR56-003
F0F030505 (4): 03-PE-IR56-004
F0F030505 (5): 03-PE-IR56-005

Batch 0158108:
The internal standard was outside QC limits in the 200ppm LDR. The analytes taken from this LDR all passed within acceptable QC limits, showing that there was no bias.
Affected Samples:
F0F030505 (1): 03-PE-IR56-001
F0F030505 (2): 03-PE-IR56-002
F0F030505 (3): 03-PE-IR56-003
F0F030505 (4): 03-PE-IR56-004
F0F030505 (5): 03-PE-IR56-005

Batch 0158108:
The samples were analyzed at a dilution due to high concentrations of target analytes. The reporting limits were adjusted only for those targets reported from the dilution run.
Affected Samples:
F0F030505 (1): 03-PE-IR56-001
F0F030505 (3): 03-PE-IR56-003
F0F030505 (4): 03-PE-IR56-004
F0F030505 (5): 03-PE-IR56-005

Batch 0158108:
The serial dilution for arsenic, beryllium, cadmium, chromium, cobalt, copper, thallium, vanadium, and zinc are outside the established QC limits, indicating possible matrix interference.
Affected Samples:
F0F030505 (1): 03-PE-IR56-001
F0F030505 (2): 03-PE-IR56-002
F0F030505 (3): 03-PE-IR56-003
F0F030505 (4): 03-PE-IR56-004
F0F030505 (5): 03-PE-IR56-005

n-Heaxane Extractable Material, Silica Gel Treated (CFR136A 1664A)

Batch 0160404:
The MS recovery is outside the established QC limits. Matrix interference is evident in the sample. Method performance is demonstrated by acceptable LCS/LCSD recoveries.
Affected Samples:
F0F030505 (1): 03-PE-IR56-001
F0F030505 (2): 03-PE-IR56-002
F0F030505 (3): 03-PE-IR56-003
F0F030505 (4): 03-PE-IR56-004
F0F030505 (5): 03-PE-IR56-005

Batch 0160404:
One of the LCS values was slightly above the client specific requirements. However, the LCS value (105.77%) is within method requirements. Results are reported with narrative comment.
Affected Samples:
F0F030505 (1): 03-PE-IR56-001
F0F030505 (2): 03-PE-IR56-002
F0F030505 (3): 03-PE-IR56-003
F0F030505 (4): 03-PE-IR56-004
F0F030505 (5): 03-PE-IR56-005

There were no other nonconformances or observations noted with any analysis on this lot.

METHODS SUMMARY

F0F030505

PARAMETER	ANALYTICAL METHOD	PREPARATION METHOD
ICP-MS (6020A)	SW846 6020A	
Mercury in Solid Waste (Manual Cold-Vapor)	SW846 7471B	
N-Hexane Extractable Material (1664A)	CFR136A 1664A H	
Percent Moisture	MCAWW 160.3 MOD	MCAWW 160.3 MOD
Semivolatile Organic Compounds by GC/MS	SW846 8270D	SW846 3550C
Volatile Organics by GC/MS - preserved	SW846 8260C	
8270C (SIM)	SW846 8270C SIM	

References:

CFR136A "Methods for Organic Chemical Analysis of Municipal and Industrial Wastewater", 40CFR, Part 136, Appendix A, October 26, 1984 and subsequent revisions.

MCAWW "Methods for Chemical Analysis of Water and Wastes", EPA-600/4-79-020, March 1983 and subsequent revisions.

SW846 "Test Methods for Evaluating Solid Waste, Physical/Chemical Methods", Third Edition, November 1986 and its updates.

SAMPLE SUMMARY

F0F030505

WO #	SAMPLE#	CLIENT SAMPLE ID	SAMPLED DATE	SAMP TIME
L2ER3	001	03-PE-IR56-001	06/02/10	11:05
L2ETG	002	03-PE-IR56-002	06/02/10	11:10
L2ETJ	003	03-PE-IR56-003	06/02/10	11:20
L2ETL	004	03-PE-IR56-004	06/02/10	11:25
L2ETM	005	03-PE-IR56-005	06/02/10	11:30

NOTE(S):

- The analytical results of the samples listed above are presented on the following pages.
- All calculations are performed before rounding to avoid round-off errors in calculated results.
- Results noted as "ND" were not detected at or above the stated limit.
- This report must not be reproduced, except in full, without the written approval of the laboratory.
- Results for the following parameters are never reported on a dry weight basis: color, corrosivity, density, flashpoint, ignitability, layers, odor, paint filter test, pH, porosity pressure, reactivity, redox potential, specific gravity, spot tests, solids, solubility, temperature, viscosity, and weight.

Tetra Tech EC, Inc.

Client Sample ID: 03-PE-IR56-001

GC/MS Volatiles

Lot-Sample #...: F0F030505-001 **Work Order #...:** L2ER31AD **Matrix.....:** SOLID
Date Sampled...: 06/02/10 11:05 **Date Received..:** 06/03/10
Prep Date.....: 06/08/10 **Analysis Date..:** 06/08/10
Prep Batch #...: 0159267 **Analysis Time..:** 10:13
Dilution Factor: 1
% Moisture.....: 9.1 **Method.....:** SW846 8260C

PARAMETER	RESULT	REPORTING LIMIT	UNITS	MDL
Acetone	ND	22	ug/kg	7.1
Benzene	ND	5.5	ug/kg	0.36
Bromodichloromethane	ND	5.5	ug/kg	0.35
Bromoform	ND	5.5	ug/kg	0.45
Bromomethane	ND	11	ug/kg	0.44
Carbon tetrachloride	ND	5.5	ug/kg	0.33
Chlorobenzene	ND	5.5	ug/kg	0.33
Dibromochloromethane	ND	5.5	ug/kg	0.32
Chloroethane	ND	11	ug/kg	0.34
Chloroform	ND	5.5	ug/kg	0.39
Chloromethane	ND	11	ug/kg	0.30
1,1-Dichloroethane	ND	5.5	ug/kg	0.40
1,2-Dichloroethane	ND	5.5	ug/kg	0.35
1,1-Dichloroethene	ND	5.5	ug/kg	0.26
cis-1,2-Dichloroethene	ND	5.5	ug/kg	0.36
trans-1,2-Dichloroethene	ND	5.5	ug/kg	0.37
1,2-Dichloropropane	ND	5.5	ug/kg	0.41
cis-1,3-Dichloropropene	ND	5.5	ug/kg	0.26
trans-1,3-Dichloropropene	ND	5.5	ug/kg	0.19
Ethylbenzene	ND	5.5	ug/kg	0.32
2-Hexanone	ND	22	ug/kg	0.31
Methylene chloride	**46 B**	**5.5**	**ug/kg**	**2.6**
4-Methyl-2-pentanone	ND	22	ug/kg	0.34
Styrene	ND	5.5	ug/kg	0.23
1,1,2,2-Tetrachloroethane	ND	5.5	ug/kg	0.48
Tetrachloroethene	ND	5.5	ug/kg	0.51
Toluene	ND	5.5	ug/kg	0.26
1,1,1-Trichloroethane	ND	5.5	ug/kg	0.26
1,1,2-Trichloroethane	ND	5.5	ug/kg	0.39
Trichloroethene	ND	5.5	ug/kg	0.29
Vinyl chloride	ND	5.5	ug/kg	0.35
Xylenes (total)	ND	11	ug/kg	0.70
Methyl tert-butyl ether	ND	5.5	ug/kg	0.51
2-Butanone (MEK)	ND	22	ug/kg	0.63

SURROGATE	PERCENT RECOVERY	RECOVERY LIMITS
4-Bromofluorobenzene	111	(85 - 120)
1,2-Dichloroethane-d4	97	(71 - 128)
Toluene-d8	107	(85 - 115)
Dibromofluoromethane	97	(76 - 126)

(Continued on next page)

Tetra Tech EC, Inc.

Client Sample ID: 03-PE-IR56-001

GC/MS Volatiles

Lot-Sample #...: F0F030505-001 Work Order #...: L2ER31AD Matrix.....: SOLID

NOTE(S):

Results and reporting limits have been adjusted for dry weight.

B Method blank contamination. The associated method blank contains the target analyte at a reportable level.

Tetra Tech EC, Inc.

Client Sample ID: 03-PE-IR56-002

GC/MS Volatiles

Lot-Sample #...: F0F030505-002 **Work Order #...:** L2ETG1AG **Matrix.....:** SOLID
Date Sampled...: 06/02/10 11:10 **Date Received..:** 06/03/10
Prep Date.....: 06/08/10 **Analysis Date..:** 06/08/10
Prep Batch #...: 0159267 **Analysis Time..:** 10:39
Dilution Factor: 1
% Moisture.....: 9.0 **Method.....:** SW846 8260C

PARAMETER	RESULT	REPORTING LIMIT	UNITS	MDL
Acetone	ND	22	ug/kg	7.1
Benzene	ND	5.5	ug/kg	0.36
Bromodichloromethane	ND	5.5	ug/kg	0.35
Bromoform	ND	5.5	ug/kg	0.45
Bromomethane	ND	11	ug/kg	0.44
Carbon tetrachloride	ND	5.5	ug/kg	0.33
Chlorobenzene	ND	5.5	ug/kg	0.33
Dibromochloromethane	ND	5.5	ug/kg	0.32
Chloroethane	ND	11	ug/kg	0.34
Chloroform	ND	5.5	ug/kg	0.39
Chloromethane	ND	11	ug/kg	0.30
1,1-Dichloroethane	ND	5.5	ug/kg	0.40
1,2-Dichloroethane	ND	5.5	ug/kg	0.35
1,1-Dichloroethene	ND	5.5	ug/kg	0.26
cis-1,2-Dichloroethene	ND	5.5	ug/kg	0.36
trans-1,2-Dichloroethene	ND	5.5	ug/kg	0.37
1,2-Dichloropropane	ND	5.5	ug/kg	0.41
cis-1,3-Dichloropropene	ND	5.5	ug/kg	0.26
trans-1,3-Dichloropropene	ND	5.5	ug/kg	0.19
Ethylbenzene	ND	5.5	ug/kg	0.32
2-Hexanone	ND	22	ug/kg	0.31
Methylene chloride	**46 B**	**5.5**	**ug/kg**	**2.6**
4-Methyl-2-pentanone	ND	22	ug/kg	0.34
Styrene	ND	5.5	ug/kg	0.23
1,1,2,2-Tetrachloroethane	ND	5.5	ug/kg	0.48
Tetrachloroethene	ND	5.5	ug/kg	0.51
Toluene	ND	5.5	ug/kg	0.26
1,1,1-Trichloroethane	ND	5.5	ug/kg	0.26
1,1,2-Trichloroethane	ND	5.5	ug/kg	0.39
Trichloroethene	ND	5.5	ug/kg	0.29
Vinyl chloride	ND	5.5	ug/kg	0.35
Xylenes (total)	ND	11	ug/kg	0.70
Methyl tert-butyl ether	ND	5.5	ug/kg	0.51
2-Butanone (MEK)	ND	22	ug/kg	0.63

SURROGATE	PERCENT RECOVERY	RECOVERY LIMITS
4-Bromofluorobenzene	108	(85 - 120)
1,2-Dichloroethane-d4	96	(71 - 128)
Toluene-d8	105	(85 - 115)
Dibromofluoromethane	93	(76 - 126)

(Continued on next page)

Tetra Tech EC, Inc.

Client Sample ID: 03-PE-IR56-002

GC/MS Volatiles

Lot-Sample #...: F0F030505-002 Work Order #...: L2ETG1AG Matrix.....: SOLID

NOTE(S):

Results and reporting limits have been adjusted for dry weight.

B Method blank contamination. The associated method blank contains the target analyte at a reportable level.

Tetra Tech EC, Inc.

Client Sample ID: 03-PE-IR56-003

GC/MS Volatiles

Lot-Sample #...: F0F030505-003 **Work Order #...:** L2ETJ1AG **Matrix.....:** SOLID
Date Sampled...: 06/02/10 11:20 **Date Received..:** 06/03/10
Prep Date.....: 06/08/10 **Analysis Date..:** 06/08/10
Prep Batch #...: 0159267 **Analysis Time..:** 11:05
Dilution Factor: 1
% Moisture.....: 5.6 **Method.....:** SW846 8260C

PARAMETER	RESULT	REPORTING LIMIT	UNITS	MDL
Acetone	**9.0 J**	**21**	**ug/kg**	**6.9**
Benzene	ND	5.3	ug/kg	0.35
Bromodichloromethane	ND	5.3	ug/kg	0.34
Bromoform	ND	5.3	ug/kg	0.44
Bromomethane	ND	11	ug/kg	0.42
Carbon tetrachloride	ND	5.3	ug/kg	0.32
Chlorobenzene	ND	5.3	ug/kg	0.32
Dibromochloromethane	ND	5.3	ug/kg	0.31
Chloroethane	ND	11	ug/kg	0.33
Chloroform	ND	5.3	ug/kg	0.38
Chloromethane	ND	11	ug/kg	0.29
1,1-Dichloroethane	ND	5.3	ug/kg	0.39
1,2-Dichloroethane	ND	5.3	ug/kg	0.34
1,1-Dichloroethene	ND	5.3	ug/kg	0.25
cis-1,2-Dichloroethene	ND	5.3	ug/kg	0.35
trans-1,2-Dichloroethene	ND	5.3	ug/kg	0.36
1,2-Dichloropropane	ND	5.3	ug/kg	0.39
cis-1,3-Dichloropropene	ND	5.3	ug/kg	0.25
trans-1,3-Dichloropropene	ND	5.3	ug/kg	0.19
Ethylbenzene	ND	5.3	ug/kg	0.31
2-Hexanone	ND	21	ug/kg	0.30
Methylene chloride	**50 B**	**5.3**	**ug/kg**	**2.5**
4-Methyl-2-pentanone	ND	21	ug/kg	0.32
Styrene	ND	5.3	ug/kg	0.22
1,1,2,2-Tetrachloroethane	ND	5.3	ug/kg	0.47
Tetrachloroethene	ND	5.3	ug/kg	0.49
Toluene	**0.35 J**	**5.3**	**ug/kg**	**0.25**
1,1,1-Trichloroethane	ND	5.3	ug/kg	0.25
1,1,2-Trichloroethane	ND	5.3	ug/kg	0.38
Trichloroethene	ND	5.3	ug/kg	0.28
Vinyl chloride	ND	5.3	ug/kg	0.34
Xylenes (total)	ND	11	ug/kg	0.67
Methyl tert-butyl ether	ND	5.3	ug/kg	0.49
2-Butanone (MEK)	ND	21	ug/kg	0.60

SURROGATE	PERCENT RECOVERY	RECOVERY LIMITS
4-Bromofluorobenzene	101	(85 - 120)
1,2-Dichloroethane-d4	99	(71 - 128)
Toluene-d8	103	(85 - 115)
Dibromofluoromethane	96	(76 - 126)

(Continued on next page)

Tetra Tech EC, Inc.

Client Sample ID: 03-PE-IR56-003

GC/MS Volatiles

Lot-Sample #...: F0F030505-003 Work Order #...: L2ETJ1AG Matrix.....: SOLID

NOTE(S):

Results and reporting limits have been adjusted for dry weight.

J Estimated result. Result is less than RL.

B Method blank contamination. The associated method blank contains the target analyte at a reportable level.

Tetra Tech EC, Inc.

Client Sample ID: 03-PE-IR56-004

GC/MS Volatiles

Lot-Sample #...: F0F030505-004 **Work Order #...:** L2ETL1AG **Matrix.....:** SOLID
Date Sampled...: 06/02/10 11:25 **Date Received..:** 06/03/10
Prep Date.....: 06/08/10 **Analysis Date..:** 06/08/10
Prep Batch #...: 0159267 **Analysis Time..:** 11:30
Dilution Factor: 1
% Moisture.....: 4.8 **Method.....:** SW846 8260C

PARAMETER	RESULT	REPORTING LIMIT	UNITS	MDL
Acetone	**15 J**	**21**	**ug/kg**	**6.8**
Benzene	ND	5.2	ug/kg	0.34
Bromodichloromethane	ND	5.2	ug/kg	0.33
Bromoform	ND	5.2	ug/kg	0.43
Bromomethane	ND	10	ug/kg	0.42
Carbon tetrachloride	ND	5.2	ug/kg	0.32
Chlorobenzene	ND	5.2	ug/kg	0.31
Dibromochloromethane	ND	5.2	ug/kg	0.30
Chloroethane	ND	10	ug/kg	0.32
Chloroform	ND	5.2	ug/kg	0.37
Chloromethane	ND	10	ug/kg	0.28
1,1-Dichloroethane	ND	5.2	ug/kg	0.39
1,2-Dichloroethane	ND	5.2	ug/kg	0.34
1,1-Dichloroethene	ND	5.2	ug/kg	0.25
cis-1,2-Dichloroethene	ND	5.2	ug/kg	0.35
trans-1,2-Dichloroethene	ND	5.2	ug/kg	0.35
1,2-Dichloropropane	ND	5.2	ug/kg	0.39
cis-1,3-Dichloropropene	ND	5.2	ug/kg	0.24
trans-1,3-Dichloropropene	ND	5.2	ug/kg	0.18
Ethylbenzene	ND	5.2	ug/kg	0.30
2-Hexanone	ND	21	ug/kg	0.29
Methylene chloride	**61 B**	**5.2**	**ug/kg**	**2.4**
4-Methyl-2-pentanone	ND	21	ug/kg	0.32
Styrene	**0.67 J**	**5.2**	**ug/kg**	**0.22**
1,1,2,2-Tetrachloroethane	ND	5.2	ug/kg	0.46
Tetrachloroethene	ND	5.2	ug/kg	0.48
Toluene	ND	5.2	ug/kg	0.25
1,1,1-Trichloroethane	ND	5.2	ug/kg	0.25
1,1,2-Trichloroethane	ND	5.2	ug/kg	0.38
Trichloroethene	ND	5.2	ug/kg	0.28
Vinyl chloride	ND	5.2	ug/kg	0.34
Xylenes (total)	ND	10	ug/kg	0.67
Methyl tert-butyl ether	ND	5.2	ug/kg	0.49
2-Butanone (MEK)	ND	21	ug/kg	0.60

SURROGATE	PERCENT RECOVERY	RECOVERY LIMITS
4-Bromofluorobenzene	114	(85 - 120)
1,2-Dichloroethane-d4	95	(71 - 128)
Toluene-d8	102	(85 - 115)
Dibromofluoromethane	91	(76 - 126)

(Continued on next page)

Tetra Tech EC, Inc.

Client Sample ID: 03-PE-IR56-004

GC/MS Volatiles

Lot-Sample #...: F0F030505-004 Work Order #...: L2ETL1AG Matrix.....: SOLID

NOTE(S):

Results and reporting limits have been adjusted for dry weight.

J Estimated result. Result is less than RL.

B Method blank contamination. The associated method blank contains the target analyte at a reportable level.

Tetra Tech EC, Inc.

Client Sample ID: 03-PE-IR56-005

GC/MS Volatiles

Lot-Sample #...: F0F030505-005 **Work Order #...:** L2ETM1AG **Matrix.....:** SOLID
Date Sampled...: 06/02/10 11:30 **Date Received..:** 06/03/10
Prep Date.....: 06/08/10 **Analysis Date..:** 06/08/10
Prep Batch #...: 0159267 **Analysis Time..:** 11:56
Dilution Factor: 1
% Moisture.....: 4.0 **Method.....:** SW846 8260C

PARAMETER	RESULT	REPORTING LIMIT	UNITS	MDL
Acetone	**20 J**	**21**	**ug/kg**	**6.7**
Benzene	ND	5.2	ug/kg	0.34
Bromodichloromethane	ND	5.2	ug/kg	0.33
Bromoform	ND	5.2	ug/kg	0.43
Bromomethane	ND	10	ug/kg	0.41
Carbon tetrachloride	ND	5.2	ug/kg	0.31
Chlorobenzene	ND	5.2	ug/kg	0.31
Dibromochloromethane	ND	5.2	ug/kg	0.30
Chloroethane	ND	10	ug/kg	0.32
Chloroform	ND	5.2	ug/kg	0.37
Chloromethane	ND	10	ug/kg	0.28
1,1-Dichloroethane	ND	5.2	ug/kg	0.38
1,2-Dichloroethane	ND	5.2	ug/kg	0.33
1,1-Dichloroethene	ND	5.2	ug/kg	0.24
cis-1,2-Dichloroethene	ND	5.2	ug/kg	0.34
trans-1,2-Dichloroethene	ND	5.2	ug/kg	0.35
1,2-Dichloropropane	ND	5.2	ug/kg	0.38
cis-1,3-Dichloropropene	ND	5.2	ug/kg	0.24
trans-1,3-Dichloropropene	ND	5.2	ug/kg	0.18
Ethylbenzene	ND	5.2	ug/kg	0.30
2-Hexanone	ND	21	ug/kg	0.29
Methylene chloride	**62 B**	**5.2**	**ug/kg**	**2.4**
4-Methyl-2-pentanone	ND	21	ug/kg	0.32
Styrene	**3.0 J**	**5.2**	**ug/kg**	**0.21**
1,1,2,2-Tetrachloroethane	ND	5.2	ug/kg	0.46
Tetrachloroethene	ND	5.2	ug/kg	0.48
Toluene	ND	5.2	ug/kg	0.25
1,1,1-Trichloroethane	ND	5.2	ug/kg	0.24
1,1,2-Trichloroethane	ND	5.2	ug/kg	0.37
Trichloroethene	ND	5.2	ug/kg	0.27
Vinyl chloride	ND	5.2	ug/kg	0.33
Xylenes (total)	ND	10	ug/kg	0.66
Methyl tert-butyl ether	ND	5.2	ug/kg	0.48
2-Butanone (MEK)	ND	21	ug/kg	0.59

SURROGATE	PERCENT RECOVERY	RECOVERY LIMITS
4-Bromofluorobenzene	138 *	(85 - 120)
1,2-Dichloroethane-d4	100	(71 - 128)
Toluene-d8	115	(85 - 115)
Dibromofluoromethane	96	(76 - 126)

(Continued on next page)

Tetra Tech EC, Inc.

Client Sample ID: 03-PE-IR56-005

GC/MS Volatiles

Lot-Sample #...: F0F030505-005 **Work Order #...:** L2ETM1AG **Matrix.....:** SOLID

NOTE(S):

* Surrogate recovery is outside stated control limits.

Results and reporting limits have been adjusted for dry weight.

J Estimated result. Result is less than RL.

B Method blank contamination. The associated method blank contains the target analyte at a reportable level.

METHOD BLANK REPORT

GC/MS Volatiles

Client Lot #...: F0F030505 **Work Order #...:** L2MJW1AA **Matrix.....:** SOLID
MB Lot-Sample #: F0F080000-267

Prep Date.....: 06/08/10 **Analysis Time..:** 09:47
Analysis Date..: 06/08/10 **Prep Batch #...:** 0159267
Dilution Factor: 1

PARAMETER	RESULT	REPORTING LIMIT	UNITS	METHOD
Acetone	ND	20	ug/kg	SW846 8260C
Benzene	ND	5.0	ug/kg	SW846 8260C
Bromodichloromethane	ND	5.0	ug/kg	SW846 8260C
Bromoform	ND	5.0	ug/kg	SW846 8260C
Bromomethane	ND	10	ug/kg	SW846 8260C
Carbon tetrachloride	ND	5.0	ug/kg	SW846 8260C
Chlorobenzene	ND	5.0	ug/kg	SW846 8260C
Dibromochloromethane	ND	5.0	ug/kg	SW846 8260C
Chloroethane	ND	10	ug/kg	SW846 8260C
Chloroform	ND	5.0	ug/kg	SW846 8260C
Chloromethane	ND	10	ug/kg	SW846 8260C
1,1-Dichloroethane	ND	5.0	ug/kg	SW846 8260C
1,2-Dichloroethane	ND	5.0	ug/kg	SW846 8260C
1,1-Dichloroethene	ND	5.0	ug/kg	SW846 8260C
cis-1,2-Dichloroethene	ND	5.0	ug/kg	SW846 8260C
trans-1,2-Dichloroethene	ND	5.0	ug/kg	SW846 8260C
1,2-Dichloropropane	ND	5.0	ug/kg	SW846 8260C
cis-1,3-Dichloropropene	ND	5.0	ug/kg	SW846 8260C
trans-1,3-Dichloropropene	ND	5.0	ug/kg	SW846 8260C
Ethylbenzene	ND	5.0	ug/kg	SW846 8260C
2-Hexanone	ND	20	ug/kg	SW846 8260C
Methylene chloride	**5.9**	**5.0**	**ug/kg**	**SW846 8260C**
4-Methyl-2-pentanone	ND	20	ug/kg	SW846 8260C
Styrene	ND	5.0	ug/kg	SW846 8260C
1,1,2,2-Tetrachloroethane	ND	5.0	ug/kg	SW846 8260C
Tetrachloroethene	ND	5.0	ug/kg	SW846 8260C
Toluene	ND	5.0	ug/kg	SW846 8260C
1,1,1-Trichloroethane	ND	5.0	ug/kg	SW846 8260C
1,1,2-Trichloroethane	ND	5.0	ug/kg	SW846 8260C
Trichloroethene	ND	5.0	ug/kg	SW846 8260C
Vinyl chloride	ND	5.0	ug/kg	SW846 8260C
Xylenes (total)	ND	10	ug/kg	SW846 8260C
Methyl tert-butyl ether	ND	5.0	ug/kg	SW846 8260C
2-Butanone (MEK)	ND	20	ug/kg	SW846 8260C

SURROGATE	PERCENT RECOVERY	RECOVERY LIMITS
4-Bromofluorobenzene	101	(85 - 120)
1,2-Dichloroethane-d4	97	(71 - 128)
Toluene-d8	104	(85 - 115)
Dibromofluoromethane	96	(76 - 126)

(Continued on next page)

METHOD BLANK REPORT

GC/MS Volatiles

Client Lot #...: F0F030505 Work Order #...: L2MJW1AA Matrix.....: SOLID

NOTE(S):

Calculations are performed before rounding to avoid round-off errors in calculated results.

LABORATORY CONTROL SAMPLE EVALUATION REPORT

GC/MS Volatiles

Client Lot #...: F0F030505 Work Order #...: L2MJW1AC Matrix.....: SOLID
LCS Lot-Sample#: F0F080000-267
Prep Date.....: 06/08/10 Analysis Date..: 06/08/10
Prep Batch #...: 0159267 Analysis Time..: 08:55
Dilution Factor: 1

PARAMETER	PERCENT RECOVERY	RECOVERY LIMITS	METHOD
1,1-Dichloroethene	**114**	**(65 - 135)**	**SW846 8260C**
Benzene	**103**	**(75 - 125)**	**SW846 8260C**
Trichloroethene	**99**	**(75 - 125)**	**SW846 8260C**
Toluene	**102**	**(70 - 125)**	**SW846 8260C**
Chlorobenzene	**103**	**(75 - 125)**	**SW846 8260C**

SURROGATE	PERCENT RECOVERY	RECOVERY LIMITS
4-Bromofluorobenzene	99	(85 - 120)
1,2-Dichloroethane-d4	102	(71 - 128)
Toluene-d8	101	(85 - 115)
Dibromofluoromethane	102	(76 - 126)

NOTE(S):

Calculations are performed before rounding to avoid round-off errors in calculated results.

Bold print denotes control parameters

MATRIX SPIKE SAMPLE EVALUATION REPORT

GC/MS Volatiles

Client Lot #...: F0F030505 **Work Order #...:** L2ETM1A3-MS **Matrix.....:** SOLID
MS Lot-Sample #: F0F030505-005 L2ETM1A4-MSD
Date Sampled...: 06/02/10 11:30 **Date Received..:** 06/03/10
Prep Date.....: 06/08/10 **Analysis Date..:** 06/08/10
Prep Batch #...: 0159267 **Analysis Time..:** 12:48
Dilution Factor: 1 **% Moisture.....:** 4.0

PARAMETER	PERCENT RECOVERY	RECOVERY LIMITS	RPD	RPD LIMITS	METHOD
1,1-Dichloroethene	**140 a**	**(65 - 135)**			**SW846 8260C**
	144 a	**(65 - 135)**	**2.4**	**(0-30)**	**SW846 8260C**
Benzene	**120**	**(75 - 125)**			**SW846 8260C**
	123	**(75 - 125)**	**2.4**	**(0-30)**	**SW846 8260C**
Trichloroethene	**104**	**(75 - 125)**			**SW846 8260C**
	111	**(75 - 125)**	**6.7**	**(0-30)**	**SW846 8260C**
Toluene	**125**	**(70 - 125)**			**SW846 8260C**
	136 a	**(70 - 125)**	**8.3**	**(0-30)**	**SW846 8260C**
Chlorobenzene	**111**	**(75 - 125)**			**SW846 8260C**
	123	**(75 - 125)**	**10**	**(0-30)**	**SW846 8260C**

SURROGATE	PERCENT RECOVERY	RECOVERY LIMITS
4-Bromofluorobenzene	103	(85 - 120)
	116	(85 - 120)
1,2-Dichloroethane-d4	94	(71 - 128)
	101	(71 - 128)
Toluene-d8	99	(85 - 115)
	105	(85 - 115)
Dibromofluoromethane	93	(76 - 126)
	98	(76 - 126)

NOTE(S):

Calculations are performed before rounding to avoid round-off errors in calculated results.

Bold print denotes control parameters

a Spiked analyte recovery is outside stated control limits.

Results and reporting limits have been adjusted for dry weight.

Tetra Tech EC, Inc.

Client Sample ID: 03-PE-IR56-001

GC/MS Semivolatiles

Lot-Sample #...: F0F030505-001 **Work Order #...:** L2ER31AF **Matrix.....:** SOLID
Date Sampled...: 06/02/10 11:05 **Date Received..:** 06/03/10
Prep Date.....: 06/07/10 **Analysis Date..:** 06/24/10
Prep Batch #...: 0158127 **Analysis Time..:** 19:19
Dilution Factor: 1
% Moisture.....: 9.1 **Method.....:** SW846 8270C SIM

PARAMETER	RESULT	REPORTING LIMIT	UNITS	MDL
Acenaphthylene	ND	7.3	ug/kg	
Acenaphthene	ND	7.3	ug/kg	
Anthracene	ND	7.3	ug/kg	
Benzo(a)anthracene	ND	7.3	ug/kg	
Benzo(b)fluoranthene	ND	7.3	ug/kg	
Benzo(k)fluoranthene	ND	7.3	ug/kg	
Benzo(ghi)perylene	**7.7**	**7.3**	**ug/kg**	
Benzo(a)pyrene	ND	7.3	ug/kg	
Chrysene	**8.1**	**7.3**	**ug/kg**	
Fluoranthene	**8.6**	**7.3**	**ug/kg**	
Fluorene	ND	7.3	ug/kg	
Indeno(1,2,3-cd)pyrene	ND	7.3	ug/kg	
Naphthalene	ND	7.3	ug/kg	
Phenanthrene	ND	7.3	ug/kg	
Pyrene	**7.9**	**7.3**	**ug/kg**	
Dibenzo(a,h)anthracene	ND	7.3	ug/kg	

SURROGATE	PERCENT RECOVERY	RECOVERY LIMITS
Nitrobenzene-d5	57	(10 - 110)
2-Fluorobiphenyl	57	(10 - 112)
Terphenyl-d14	67	(14 - 108)

NOTE(S):

Results and reporting limits have been adjusted for dry weight.

Tetra Tech EC, Inc.

Client Sample ID: 03-PE-IR56-002

GC/MS Semivolatiles

Lot-Sample #...: F0F030505-002 Work Order #...: L2ETG1AJ Matrix.....: SOLID
Date Sampled...: 06/02/10 11:10 Date Received..: 06/03/10
Prep Date.....: 06/07/10 Analysis Date..: 06/24/10
Prep Batch #...: 0158127 Analysis Time..: 19:53
Dilution Factor: 1
% Moisture.....: 9.0 Method.....: SW846 8270C SIM

PARAMETER	RESULT	REPORTING LIMIT	UNITS	MDL
Acenaphthylene	ND	7.3	ug/kg	
Acenaphthene	ND	7.3	ug/kg	
Anthracene	**14**	**7.3**	**ug/kg**	
Benzo(a)anthracene	**110**	**7.3**	**ug/kg**	
Benzo(b)fluoranthene	**110**	**7.3**	**ug/kg**	
Benzo(k)fluoranthene	**110**	**7.3**	**ug/kg**	
Benzo(ghi)perylene	**54**	**7.3**	**ug/kg**	
Benzo(a)pyrene	**110**	**7.3**	**ug/kg**	
Chrysene	**180**	**7.3**	**ug/kg**	
Fluoranthene	**280**	**7.3**	**ug/kg**	
Fluorene	ND	7.3	ug/kg	
Indeno(1,2,3-cd)pyrene	**55**	**7.3**	**ug/kg**	
Naphthalene	ND	7.3	ug/kg	
Phenanthrene	**100**	**7.3**	**ug/kg**	
Pyrene	**290**	**7.3**	**ug/kg**	
Dibenzo(a,h)anthracene	**21**	**7.3**	**ug/kg**	

SURROGATE	PERCENT RECOVERY	RECOVERY LIMITS
Nitrobenzene-d5	49	(10 - 110)
2-Fluorobiphenyl	51	(10 - 112)
Terphenyl-d14	69	(14 - 108)

NOTE(S):

Results and reporting limits have been adjusted for dry weight.

Tetra Tech EC, Inc.

Client Sample ID: 03-PE-IR56-003

GC/MS Semivolatiles

Lot-Sample #...: F0F030505-003 **Work Order #...:** L2ETJ1AJ **Matrix.....:** SOLID
Date Sampled...: 06/02/10 11:20 **Date Received..:** 06/03/10
Prep Date.....: 06/07/10 **Analysis Date..:** 06/24/10
Prep Batch #...: 0158127 **Analysis Time..:** 20:27
Dilution Factor: 1
% Moisture.....: 5.6 **Method.....:** SW846 8270C SIM

PARAMETER	RESULT	REPORTING LIMIT	UNITS	MDL
Acenaphthylene	ND	7.0	ug/kg	
Acenaphthene	ND	7.0	ug/kg	
Anthracene	ND	7.0	ug/kg	
Benzo(a)anthracene	ND	7.0	ug/kg	
Benzo(b)fluoranthene	ND	7.0	ug/kg	
Benzo(k)fluoranthene	ND	7.0	ug/kg	
Benzo(ghi)perylene	ND	7.0	ug/kg	
Benzo(a)pyrene	ND	7.0	ug/kg	
Chrysene	ND	7.0	ug/kg	
Fluoranthene	ND	7.0	ug/kg	
Fluorene	ND	7.0	ug/kg	
Indeno(1,2,3-cd)pyrene	ND	7.0	ug/kg	
Naphthalene	ND	7.0	ug/kg	
Phenanthrene	ND	7.0	ug/kg	
Pyrene	ND	7.0	ug/kg	
Dibenzo(a,h)anthracene	ND	7.0	ug/kg	

SURROGATE	PERCENT RECOVERY	RECOVERY LIMITS
Nitrobenzene-d5	47	(10 - 110)
2-Fluorobiphenyl	46	(10 - 112)
Terphenyl-d14	64	(14 - 108)

NOTE(S):

Results and reporting limits have been adjusted for dry weight.

Tetra Tech EC, Inc.

Client Sample ID: 03-PE-IR56-004

GC/MS Semivolatiles

Lot-Sample #...: F0F030505-004 Work Order #...: L2ETL1AJ Matrix.....: SOLID
Date Sampled...: 06/02/10 11:25 Date Received..: 06/03/10
Prep Date.....: 06/07/10 Analysis Date..: 06/24/10
Prep Batch #...: 0158127 Analysis Time..: 21:01
Dilution Factor: 1
% Moisture.....: 4.8 Method.....: SW846 8270C SIM

PARAMETER	RESULT	REPORTING LIMIT	UNITS	MDL
Acenaphthylene	ND	6.9	ug/kg	
Acenaphthene	ND	6.9	ug/kg	
Anthracene	ND	6.9	ug/kg	
Benzo(a)anthracene	**11**	**6.9**	**ug/kg**	
Benzo(b)fluoranthene	**11**	**6.9**	**ug/kg**	
Benzo(k)fluoranthene	**13**	**6.9**	**ug/kg**	
Benzo(ghi)perylene	**11**	**6.9**	**ug/kg**	
Benzo(a)pyrene	**7.7**	**6.9**	**ug/kg**	
Chrysene	**18**	**6.9**	**ug/kg**	
Fluoranthene	**32**	**6.9**	**ug/kg**	
Fluorene	ND	6.9	ug/kg	
Indeno(1,2,3-cd)pyrene	**7.9**	**6.9**	**ug/kg**	
Naphthalene	ND	6.9	ug/kg	
Phenanthrene	**20**	**6.9**	**ug/kg**	
Pyrene	**26**	**6.9**	**ug/kg**	
Dibenzo(a,h)anthracene	ND	6.9	ug/kg	

SURROGATE	PERCENT RECOVERY	RECOVERY LIMITS
Nitrobenzene-d5	42	(10 - 110)
2-Fluorobiphenyl	45	(10 - 112)
Terphenyl-d14	66	(14 - 108)

NOTE(S):

Results and reporting limits have been adjusted for dry weight.

Tetra Tech EC, Inc.

Client Sample ID: 03-PE-IR56-005

GC/MS Semivolatiles

Lot-Sample #...: F0F030505-005 Work Order #...: L2ETM1AJ Matrix.....: SOLID
Date Sampled...: 06/02/10 11:30 Date Received..: 06/03/10
Prep Date.....: 06/07/10 Analysis Date..: 06/24/10
Prep Batch #...: 0158127 Analysis Time..: 21:35
Dilution Factor: 1
% Moisture.....: 4.0 Method.....: SW846 8270C SIM

PARAMETER	RESULT	REPORTING LIMIT	UNITS	MDL
Acenaphthylene	**46**	**6.9**	**ug/kg**	
Acenaphthene	ND	6.9	ug/kg	
Anthracene	**32**	**6.9**	**ug/kg**	
Benzo(a)anthracene	**80**	**6.9**	**ug/kg**	
Benzo(b)fluoranthene	**310**	**6.9**	**ug/kg**	
Benzo(k)fluoranthene	**290**	**6.9**	**ug/kg**	
Benzo(ghi)perylene	**280**	**6.9**	**ug/kg**	
Benzo(a)pyrene	**410 E**	**6.9**	**ug/kg**	
Chrysene	**180**	**6.9**	**ug/kg**	
Fluoranthene	**24**	**6.9**	**ug/kg**	
Fluorene	ND	6.9	ug/kg	
Indeno(1,2,3-cd)pyrene	**270**	**6.9**	**ug/kg**	
Naphthalene	ND	6.9	ug/kg	
Phenanthrene	**17**	**6.9**	**ug/kg**	
Pyrene	**53**	**6.9**	**ug/kg**	
Dibenzo(a,h)anthracene	**110**	**6.9**	**ug/kg**	

SURROGATE	PERCENT RECOVERY	RECOVERY LIMITS
Nitrobenzene-d5	51	(10 - 110)
2-Fluorobiphenyl	53	(10 - 112)
Terphenyl-d14	62	(14 - 108)

NOTE(S):

Results and reporting limits have been adjusted for dry weight.

E Estimated result. Result concentration exceeds the calibration range.

METHOD BLANK REPORT

GC/MS Semivolatiles

Client Lot #...: F0F030505 **Work Order #...:** L2JX11AA **Matrix.....:** SOLID
MB Lot-Sample #: F0F070000-127
Prep Date.....: 06/07/10 **Analysis Time..:** 14:29
Analysis Date..: 06/22/10 **Prep Batch #...:** 0158127
Dilution Factor: 1

PARAMETER	RESULT	REPORTING LIMIT	UNITS	METHOD
Acenaphthene	ND	6.6	ug/kg	SW846 8270C SIM
Acenaphthylene	ND	6.6	ug/kg	SW846 8270C SIM
Anthracene	ND	6.6	ug/kg	SW846 8270C SIM
Benzo(a)anthracene	ND	6.6	ug/kg	SW846 8270C SIM
Benzo(b)fluoranthene	ND	6.6	ug/kg	SW846 8270C SIM
Benzo(k)fluoranthene	ND	6.6	ug/kg	SW846 8270C SIM
Benzo(ghi)perylene	ND	6.6	ug/kg	SW846 8270C SIM
Benzo(a)pyrene	ND	6.6	ug/kg	SW846 8270C SIM
Chrysene	ND	6.6	ug/kg	SW846 8270C SIM
Fluoranthene	ND	6.6	ug/kg	SW846 8270C SIM
Fluorene	ND	6.6	ug/kg	SW846 8270C SIM
Indeno(1,2,3-cd)pyrene	ND	6.6	ug/kg	SW846 8270C SIM
Naphthalene	ND	6.6	ug/kg	SW846 8270C SIM
Phenanthrene	ND	6.6	ug/kg	SW846 8270C SIM
Pyrene	ND	6.6	ug/kg	SW846 8270C SIM
Dibenzo(a,h)anthracene	ND	6.6	ug/kg	SW846 8270C SIM

SURROGATE	PERCENT RECOVERY	RECOVERY LIMITS
Nitrobenzene-d5	80	(10 - 110)
2-Fluorobiphenyl	74	(10 - 112)
Terphenyl-d14	73	(14 - 108)

NOTE(S):

Calculations are performed before rounding to avoid round-off errors in calculated results.

Tetra Tech EC, Inc.

Client Sample ID: 03-PE-IR56-001

GC/MS Semivolatiles

Lot-Sample #...: F0F030505-001 Work Order #...: L2ER31AE Matrix.....: SOLID
Date Sampled...: 06/02/10 11:05 Date Received..: 06/03/10
Prep Date.....: 06/07/10 Analysis Date..: 06/16/10
Prep Batch #...: 0158057 Analysis Time..: 02:43
Dilution Factor: 1
% Moisture.....: 9.1 Method.....: SW846 8270D

PARAMETER	RESULT	REPORTING LIMIT	UNITS	MDL
Pyridine	ND	730	ug/kg	73
Phenol	ND	360	ug/kg	37
bis(2-Chloroethyl)-ether	ND	360	ug/kg	37
2-Chlorophenol	ND	360	ug/kg	37
1,3-Dichlorobenzene	ND	360	ug/kg	37
1,4-Dichlorobenzene	ND	360	ug/kg	37
1,2-Dichlorobenzene	ND	360	ug/kg	37
2-Methylphenol	ND	360	ug/kg	37
3-Methylphenol & 4-Methylphenol	ND	730	ug/kg	73
bis(2-Chloroisopropyl) ether	ND	360	ug/kg	37
N-Nitrosodi-n-propyl-amine	ND	270	ug/kg	37
Hexachloroethane	ND	360	ug/kg	37
2-Nitrophenol	ND	360	ug/kg	37
2,4-Dimethylphenol	ND	360	ug/kg	37
Nitrobenzene	ND	360	ug/kg	37
bis(2-Chloroethoxy) methane	ND	360	ug/kg	37
2,4-Dichlorophenol	ND	360	ug/kg	37
1,2,4-Trichloro-benzene	ND	360	ug/kg	37
4-Chloroaniline	ND	360	ug/kg	37
Hexachlorobutadiene	ND	360	ug/kg	37
4-Chloro-3-methylphenol	ND	360	ug/kg	37
Hexachlorocyclopenta-diene	ND	1800	ug/kg	360
2,4,6-Trichloro-phenol	ND	360	ug/kg	37
2,4,5-Trichloro-phenol	ND	360	ug/kg	37
2-Chloronaphthalene	ND	360	ug/kg	37
2-Nitroaniline	ND	360	ug/kg	37
Dimethyl phthalate	ND	360	ug/kg	37
2,6-Dinitrotoluene	ND	360	ug/kg	37
3-Nitroaniline	ND	360	ug/kg	37

(Continued on next page)

Tetra Tech EC, Inc.

Client Sample ID: 03-PE-IR56-001

GC/MS Semivolatiles

Lot-Sample #...: F0F030505-001 Work Order #...: L2ER31AE Matrix.....: SOLID

PARAMETER	RESULT	REPORTING LIMIT	UNITS	MDL
2,4-Dinitrophenol	ND	1800	ug/kg	360
4-Nitrophenol	ND	1800	ug/kg	360
Dibenzofuran	ND	360	ug/kg	37
2,4-Dinitrotoluene	ND	360	ug/kg	37
Diethyl phthalate	ND	360	ug/kg	37
4-Chlorophenyl phenyl ether	ND	360	ug/kg	37
4-Nitroaniline	ND	1800	ug/kg	360
4,6-Dinitro-2-methylphenol	ND	1800	ug/kg	360
N-Nitrosodiphenylamine	ND	360	ug/kg	37
4-Bromophenyl phenyl ether	ND	360	ug/kg	37
Hexachlorobenzene	ND	360	ug/kg	37
Pentachlorophenol	ND	730	ug/kg	360
Di-n-butyl phthalate	ND	360	ug/kg	37
Butyl benzyl phthalate	ND	360	ug/kg	37
3,3'-Dichlorobenzidine	ND	1800	ug/kg	37
bis(2-Ethylhexyl) phthalate	ND	360	ug/kg	48
Di-n-octyl phthalate	ND	360	ug/kg	37

SURROGATE	PERCENT RECOVERY	RECOVERY LIMITS
Nitrobenzene-d5	74	(35 - 100)
2-Fluorobiphenyl	69	(45 - 105)
2,4,6-Tribromophenol	65	(35 - 125)
Terphenyl-d14	80	(30 - 125)
2-Fluorophenol	73	(35 - 105)
Phenol-d5	80	(40 - 100)

NOTE(S):

Results and reporting limits have been adjusted for dry weight.

Tetra Tech EC, Inc.

Client Sample ID: 03-PE-IR56-002

GC/MS Semivolatiles

Lot-Sample #...: F0F030505-002 Work Order #...: L2ETG1AH Matrix.....: SOLID
Date Sampled...: 06/02/10 11:10 Date Received..: 06/03/10
Prep Date.....: 06/07/10 Analysis Date..: 06/16/10
Prep Batch #...: 0158057 Analysis Time..: 04:01
Dilution Factor: 1
% Moisture.....: 9.0 Method.....: SW846 8270D

PARAMETER	RESULT	REPORTING LIMIT	UNITS	MDL
Pyridine	ND	730	ug/kg	73
Phenol	ND	360	ug/kg	37
bis(2-Chloroethyl)-ether	ND	360	ug/kg	37
2-Chlorophenol	ND	360	ug/kg	37
1,3-Dichlorobenzene	ND	360	ug/kg	37
1,4-Dichlorobenzene	ND	360	ug/kg	37
1,2-Dichlorobenzene	ND	360	ug/kg	37
2-Methylphenol	ND	360	ug/kg	37
3-Methylphenol & 4-Methylphenol	ND	730	ug/kg	73
bis(2-Chloroisopropyl) ether	ND	360	ug/kg	37
N-Nitrosodi-n-propyl-amine	ND	270	ug/kg	37
Hexachloroethane	ND	360	ug/kg	37
2-Nitrophenol	ND	360	ug/kg	37
2,4-Dimethylphenol	ND	360	ug/kg	37
Nitrobenzene	ND	360	ug/kg	37
bis(2-Chloroethoxy) methane	ND	360	ug/kg	37
2,4-Dichlorophenol	ND	360	ug/kg	37
1,2,4-Trichloro-benzene	ND	360	ug/kg	37
4-Chloroaniline	ND	360	ug/kg	37
Hexachlorobutadiene	ND	360	ug/kg	37
4-Chloro-3-methylphenol	ND	360	ug/kg	37
Hexachlorocyclopenta-diene	ND	1800	ug/kg	360
2,4,6-Trichloro-phenol	ND	360	ug/kg	37
2,4,5-Trichloro-phenol	ND	360	ug/kg	37
2-Chloronaphthalene	ND	360	ug/kg	37
2-Nitroaniline	ND	360	ug/kg	37
Dimethyl phthalate	ND	360	ug/kg	37
2,6-Dinitrotoluene	ND	360	ug/kg	37
3-Nitroaniline	ND	360	ug/kg	37

(Continued on next page)

Tetra Tech EC, Inc.

Client Sample ID: 03-PE-IR56-002

GC/MS Semivolatiles

Lot-Sample #...: F0F030505-002 Work Order #...: L2ETG1AH Matrix.....: SOLID

PARAMETER	RESULT	REPORTING LIMIT	UNITS	MDL
2,4-Dinitrophenol	ND	1800	ug/kg	360
4-Nitrophenol	ND	1800	ug/kg	360
Dibenzofuran	ND	360	ug/kg	37
2,4-Dinitrotoluene	ND	360	ug/kg	37
Diethyl phthalate	ND	360	ug/kg	37
4-Chlorophenyl phenyl ether	ND	360	ug/kg	37
4-Nitroaniline	ND	1800	ug/kg	360
4,6-Dinitro-2-methylphenol	ND	1800	ug/kg	360
N-Nitrosodiphenylamine	ND	360	ug/kg	37
4-Bromophenyl phenyl ether	ND	360	ug/kg	37
Hexachlorobenzene	ND	360	ug/kg	37
Pentachlorophenol	ND	730	ug/kg	360
Di-n-butyl phthalate	ND	360	ug/kg	37
Butyl benzyl phthalate	ND	360	ug/kg	37
3,3'-Dichlorobenzidine	ND	1800	ug/kg	37
bis(2-Ethylhexyl) phthalate	ND	360	ug/kg	48
Di-n-octyl phthalate	ND	360	ug/kg	37

SURROGATE	PERCENT RECOVERY	RECOVERY LIMITS
Nitrobenzene-d5	68	(35 - 100)
2-Fluorobiphenyl	60	(45 - 105)
2,4,6-Tribromophenol	64	(35 - 125)
Terphenyl-d14	84	(30 - 125)
2-Fluorophenol	67	(35 - 105)
Phenol-d5	76	(40 - 100)

NOTE(S):

Results and reporting limits have been adjusted for dry weight.

Tetra Tech EC, Inc.

Client Sample ID: 03-PE-IR56-003

GC/MS Semivolatiles

Lot-Sample #...: F0F030505-003 **Work Order #...:** L2ETJ1AH **Matrix.....:** SOLID
Date Sampled...: 06/02/10 11:20 **Date Received..:** 06/03/10
Prep Date.....: 06/07/10 **Analysis Date..:** 06/16/10
Prep Batch #...: 0158057 **Analysis Time..:** 04:27
Dilution Factor: 1
% Moisture.....: 5.6 **Method.....:** SW846 8270D

PARAMETER	RESULT	REPORTING LIMIT	UNITS	MDL
Pyridine	ND	700	ug/kg	71
Phenol	ND	350	ug/kg	35
bis(2-Chloroethyl)-ether	ND	350	ug/kg	35
2-Chlorophenol	ND	350	ug/kg	35
1,3-Dichlorobenzene	ND	350	ug/kg	35
1,4-Dichlorobenzene	ND	350	ug/kg	35
1,2-Dichlorobenzene	ND	350	ug/kg	35
2-Methylphenol	ND	350	ug/kg	35
3-Methylphenol & 4-Methylphenol	ND	700	ug/kg	71
bis(2-Chloroisopropyl) ether	ND	350	ug/kg	35
N-Nitrosodi-n-propyl-amine	ND	260	ug/kg	35
Hexachloroethane	ND	350	ug/kg	35
2-Nitrophenol	ND	350	ug/kg	35
2,4-Dimethylphenol	ND	350	ug/kg	35
Nitrobenzene	ND	350	ug/kg	35
bis(2-Chloroethoxy) methane	ND	350	ug/kg	35
2,4-Dichlorophenol	ND	350	ug/kg	35
1,2,4-Trichloro-benzene	ND	350	ug/kg	35
4-Chloroaniline	ND	350	ug/kg	35
Hexachlorobutadiene	ND	350	ug/kg	35
4-Chloro-3-methylphenol	ND	350	ug/kg	35
Hexachlorocyclopenta-diene	ND	1700	ug/kg	350
2,4,6-Trichloro-phenol	ND	350	ug/kg	35
2,4,5-Trichloro-phenol	ND	350	ug/kg	35
2-Chloronaphthalene	ND	350	ug/kg	35
2-Nitroaniline	ND	350	ug/kg	35
Dimethyl phthalate	ND	350	ug/kg	35
2,6-Dinitrotoluene	ND	350	ug/kg	35
3-Nitroaniline	ND	350	ug/kg	35

(Continued on next page)

Tetra Tech EC, Inc.

Client Sample ID: 03-PE-IR56-003

GC/MS Semivolatiles

Lot-Sample #...: F0F030505-003 **Work Order #...:** L2ETJ1AH **Matrix.....:** SOLID

PARAMETER	RESULT	REPORTING LIMIT	UNITS	MDL
2,4-Dinitrophenol	ND	1700	ug/kg	350
4-Nitrophenol	ND	1700	ug/kg	350
Dibenzofuran	ND	350	ug/kg	35
2,4-Dinitrotoluene	ND	350	ug/kg	35
Diethyl phthalate	ND	350	ug/kg	35
4-Chlorophenyl phenyl ether	ND	350	ug/kg	35
4-Nitroaniline	ND	1700	ug/kg	350
4,6-Dinitro-2-methylphenol	ND	1700	ug/kg	350
N-Nitrosodiphenylamine	ND	350	ug/kg	35
4-Bromophenyl phenyl ether	ND	350	ug/kg	35
Hexachlorobenzene	ND	350	ug/kg	35
Pentachlorophenol	ND	700	ug/kg	350
Di-n-butyl phthalate	ND	350	ug/kg	35
Butyl benzyl phthalate	ND	350	ug/kg	35
3,3'-Dichlorobenzidine	ND	1700	ug/kg	35
bis(2-Ethylhexyl) phthalate	ND	350	ug/kg	46
Di-n-octyl phthalate	ND	350	ug/kg	35

SURROGATE	PERCENT RECOVERY	RECOVERY LIMITS
Nitrobenzene-d5	64	(35 - 100)
2-Fluorobiphenyl	56	(45 - 105)
2,4,6-Tribromophenol	63	(35 - 125)
Terphenyl-d14	75	(30 - 125)
2-Fluorophenol	63	(35 - 105)
Phenol-d5	69	(40 - 100)

NOTE(S):

Results and reporting limits have been adjusted for dry weight.

Tetra Tech EC, Inc.

Client Sample ID: 03-PE-IR56-004

GC/MS Semivolatiles

Lot-Sample #...: F0F030505-004 **Work Order #...:** L2ETL1AH **Matrix.....:** SOLID
Date Sampled...: 06/02/10 11:25 **Date Received..:** 06/03/10
Prep Date.....: 06/07/10 **Analysis Date..:** 06/16/10
Prep Batch #...: 0158057 **Analysis Time..:** 04:53
Dilution Factor: 1
% Moisture.....: 4.8 **Method.....:** SW846 8270D

PARAMETER	RESULT	REPORTING LIMIT	UNITS	MDL
Pyridine	ND	690	ug/kg	70
Phenol	ND	350	ug/kg	35
bis(2-Chloroethyl)-ether	ND	350	ug/kg	35
2-Chlorophenol	ND	350	ug/kg	35
1,3-Dichlorobenzene	ND	350	ug/kg	35
1,4-Dichlorobenzene	ND	350	ug/kg	35
1,2-Dichlorobenzene	ND	350	ug/kg	35
2-Methylphenol	ND	350	ug/kg	35
3-Methylphenol & 4-Methylphenol	ND	690	ug/kg	70
bis(2-Chloroisopropyl) ether	ND	350	ug/kg	35
N-Nitrosodi-n-propyl-amine	ND	260	ug/kg	35
Hexachloroethane	ND	350	ug/kg	35
2-Nitrophenol	ND	350	ug/kg	35
2,4-Dimethylphenol	ND	350	ug/kg	35
Nitrobenzene	ND	350	ug/kg	35
bis(2-Chloroethoxy) methane	ND	350	ug/kg	35
2,4-Dichlorophenol	ND	350	ug/kg	35
1,2,4-Trichloro-benzene	ND	350	ug/kg	35
4-Chloroaniline	ND	350	ug/kg	35
Hexachlorobutadiene	ND	350	ug/kg	35
4-Chloro-3-methylphenol	ND	350	ug/kg	35
Hexachlorocyclopenta-diene	ND	1700	ug/kg	350
2,4,6-Trichloro-phenol	ND	350	ug/kg	35
2,4,5-Trichloro-phenol	ND	350	ug/kg	35
2-Chloronaphthalene	ND	350	ug/kg	35
2-Nitroaniline	ND	350	ug/kg	35
Dimethyl phthalate	ND	350	ug/kg	35
2,6-Dinitrotoluene	ND	350	ug/kg	35
3-Nitroaniline	ND	350	ug/kg	35

(Continued on next page)

Tetra Tech EC, Inc.

Client Sample ID: 03-PE-IR56-004

GC/MS Semivolatiles

Lot-Sample #...: F0F030505-004 Work Order #...: L2ETL1AH Matrix.....: SOLID

PARAMETER	RESULT	REPORTING LIMIT	UNITS	MDL
2,4-Dinitrophenol	ND	1700	ug/kg	350
4-Nitrophenol	ND	1700	ug/kg	350
Dibenzofuran	ND	350	ug/kg	35
2,4-Dinitrotoluene	ND	350	ug/kg	35
Diethyl phthalate	ND	350	ug/kg	35
4-Chlorophenyl phenyl ether	ND	350	ug/kg	35
4-Nitroaniline	ND	1700	ug/kg	350
4,6-Dinitro-2-methylphenol	ND	1700	ug/kg	350
N-Nitrosodiphenylamine	ND	350	ug/kg	35
4-Bromophenyl phenyl ether	ND	350	ug/kg	35
Hexachlorobenzene	ND	350	ug/kg	35
Pentachlorophenol	ND	690	ug/kg	350
Di-n-butyl phthalate	ND	350	ug/kg	35
Butyl benzyl phthalate	ND	350	ug/kg	35
3,3'-Dichlorobenzidine	ND	1700	ug/kg	35
bis(2-Ethylhexyl) phthalate	ND	350	ug/kg	45
Di-n-octyl phthalate	ND	350	ug/kg	35

SURROGATE	PERCENT RECOVERY	RECOVERY LIMITS
Nitrobenzene-d5	59	(35 - 100)
2-Fluorobiphenyl	54	(45 - 105)
2,4,6-Tribromophenol	56	(35 - 125)
Terphenyl-d14	77	(30 - 125)
2-Fluorophenol	58	(35 - 105)
Phenol-d5	66	(40 - 100)

NOTE(S):

Results and reporting limits have been adjusted for dry weight.

Tetra Tech EC, Inc.

Client Sample ID: 03-PE-IR56-005

GC/MS Semivolatiles

Lot-Sample #...: F0F030505-005 **Work Order #...:** L2ETM1AH **Matrix.....:** SOLID
Date Sampled...: 06/02/10 11:30 **Date Received..:** 06/03/10
Prep Date.....: 06/07/10 **Analysis Date..:** 06/16/10
Prep Batch #...: 0158057 **Analysis Time..:** 05:19
Dilution Factor: 1
% Moisture.....: 4.0 **Method.....:** SW846 8270D

PARAMETER	RESULT	REPORTING LIMIT	UNITS	MDL
Pyridine	ND	690	ug/kg	69
Phenol	ND	340	ug/kg	35
bis(2-Chloroethyl)-ether	ND	340	ug/kg	35
2-Chlorophenol	ND	340	ug/kg	35
1,3-Dichlorobenzene	ND	340	ug/kg	35
1,4-Dichlorobenzene	ND	340	ug/kg	35
1,2-Dichlorobenzene	ND	340	ug/kg	35
2-Methylphenol	ND	340	ug/kg	35
3-Methylphenol & 4-Methylphenol	ND	690	ug/kg	69
bis(2-Chloroisopropyl) ether	ND	340	ug/kg	35
N-Nitrosodi-n-propyl-amine	ND	260	ug/kg	35
Hexachloroethane	ND	340	ug/kg	35
2-Nitrophenol	ND	340	ug/kg	35
2,4-Dimethylphenol	ND	340	ug/kg	35
Nitrobenzene	ND	340	ug/kg	35
bis(2-Chloroethoxy) methane	ND	340	ug/kg	35
2,4-Dichlorophenol	ND	340	ug/kg	35
1,2,4-Trichloro-benzene	ND	340	ug/kg	35
4-Chloroaniline	ND	340	ug/kg	35
Hexachlorobutadiene	ND	340	ug/kg	35
4-Chloro-3-methylphenol	ND	340	ug/kg	35
Hexachlorocyclopenta-diene	ND	1700	ug/kg	340
2,4,6-Trichloro-phenol	ND	340	ug/kg	35
2,4,5-Trichloro-phenol	ND	340	ug/kg	35
2-Chloronaphthalene	ND	340	ug/kg	35
2-Nitroaniline	ND	340	ug/kg	35
Dimethyl phthalate	ND	340	ug/kg	35
2,6-Dinitrotoluene	ND	340	ug/kg	35
3-Nitroaniline	ND	340	ug/kg	35

(Continued on next page)

Tetra Tech EC, Inc.

Client Sample ID: 03-PE-IR56-005

GC/MS Semivolatiles

Lot-Sample #...: F0F030505-005 **Work Order #...:** L2ETM1AH **Matrix.....:** SOLID

PARAMETER	RESULT	REPORTING LIMIT	UNITS	MDL
2,4-Dinitrophenol	ND	1700	ug/kg	340
4-Nitrophenol	ND	1700	ug/kg	340
Dibenzofuran	ND	340	ug/kg	35
2,4-Dinitrotoluene	ND	340	ug/kg	35
Diethyl phthalate	ND	340	ug/kg	35
4-Chlorophenyl phenyl ether	ND	340	ug/kg	35
4-Nitroaniline	ND	1700	ug/kg	340
4,6-Dinitro-2-methylphenol	ND	1700	ug/kg	340
N-Nitrosodiphenylamine	ND	340	ug/kg	35
4-Bromophenyl phenyl ether	ND	340	ug/kg	35
Hexachlorobenzene	ND	340	ug/kg	35
Pentachlorophenol	ND	690	ug/kg	340
Di-n-butyl phthalate	ND	340	ug/kg	35
Butyl benzyl phthalate	ND	340	ug/kg	35
3,3'-Dichlorobenzidine	ND	1700	ug/kg	35
bis(2-Ethylhexyl) phthalate	ND	340	ug/kg	45
Di-n-octyl phthalate	ND	340	ug/kg	35

SURROGATE	PERCENT RECOVERY	RECOVERY LIMITS
Nitrobenzene-d5	70	(35 - 100)
2-Fluorobiphenyl	62	(45 - 105)
2,4,6-Tribromophenol	55	(35 - 125)
Terphenyl-d14	74	(30 - 125)
2-Fluorophenol	69	(35 - 105)
Phenol-d5	78	(40 - 100)

NOTE(S):

Results and reporting limits have been adjusted for dry weight.

METHOD BLANK REPORT

GC/MS Semivolatiles

Client Lot #...: F0F030505 **Work Order #...:** L2JX51AA **Matrix.....:** SOLID
MB Lot-Sample #: F0F070000-057

Prep Date.....: 06/07/10 **Analysis Time..:** 20:40
Analysis Date..: 06/15/10 **Prep Batch #...:** 0158057
Dilution Factor: 1

PARAMETER	RESULT	REPORTING LIMIT	UNITS	METHOD
Pyridine	ND	660	ug/kg	SW846 8270D
Phenol	ND	330	ug/kg	SW846 8270D
bis(2-Chloroethyl)-ether	ND	330	ug/kg	SW846 8270D
2-Chlorophenol	ND	330	ug/kg	SW846 8270D
1,3-Dichlorobenzene	ND	330	ug/kg	SW846 8270D
1,4-Dichlorobenzene	ND	330	ug/kg	SW846 8270D
1,2-Dichlorobenzene	ND	330	ug/kg	SW846 8270D
2-Methylphenol	ND	330	ug/kg	SW846 8270D
3-Methylphenol & 4-Methylphenol	ND	660	ug/kg	SW846 8270D
bis(2-Chloroisopropyl) ether	ND	330	ug/kg	SW846 8270D
N-Nitrosodi-n-propyl-amine	ND	250	ug/kg	SW846 8270D
Hexachloroethane	ND	330	ug/kg	SW846 8270D
2-Nitrophenol	ND	330	ug/kg	SW846 8270D
2,4-Dimethylphenol	ND	330	ug/kg	SW846 8270D
Nitrobenzene	ND	330	ug/kg	SW846 8270D
bis(2-Chloroethoxy) methane	ND	330	ug/kg	SW846 8270D
2,4-Dichlorophenol	ND	330	ug/kg	SW846 8270D
1,2,4-Trichloro-benzene	ND	330	ug/kg	SW846 8270D
4-Chloroaniline	ND	330	ug/kg	SW846 8270D
Hexachlorobutadiene	ND	330	ug/kg	SW846 8270D
4-Chloro-3-methylphenol	ND	330	ug/kg	SW846 8270D
Hexachlorocyclopenta-diene	ND	1600	ug/kg	SW846 8270D
2,4,6-Trichloro-phenol	ND	330	ug/kg	SW846 8270D
2,4,5-Trichloro-phenol	ND	330	ug/kg	SW846 8270D
2-Chloronaphthalene	ND	330	ug/kg	SW846 8270D
2-Nitroaniline	ND	330	ug/kg	SW846 8270D
Dimethyl phthalate	ND	330	ug/kg	SW846 8270D
2,6-Dinitrotoluene	ND	330	ug/kg	SW846 8270D
3-Nitroaniline	ND	330	ug/kg	SW846 8270D
2,4-Dinitrophenol	ND	1600	ug/kg	SW846 8270D
4-Nitrophenol	ND	1600	ug/kg	SW846 8270D
Dibenzofuran	ND	330	ug/kg	SW846 8270D

(Continued on next page)

METHOD BLANK REPORT

GC/MS Semivolatiles

Client Lot #...: F0F030505 **Work Order #...:** L2JX51AA **Matrix.....:** SOLID

PARAMETER	RESULT	REPORTING LIMIT	UNITS	METHOD
2,4-Dinitrotoluene	ND	330	ug/kg	SW846 8270D
Diethyl phthalate	ND	330	ug/kg	SW846 8270D
4-Chlorophenyl phenyl ether	ND	330	ug/kg	SW846 8270D
4-Nitroaniline	ND	1600	ug/kg	SW846 8270D
4,6-Dinitro-2-methylphenol	ND	1600	ug/kg	SW846 8270D
N-Nitrosodiphenylamine	ND	330	ug/kg	SW846 8270D
4-Bromophenyl phenyl ether	ND	330	ug/kg	SW846 8270D
Hexachlorobenzene	ND	330	ug/kg	SW846 8270D
Pentachlorophenol	ND	660	ug/kg	SW846 8270D
Di-n-butyl phthalate	ND	330	ug/kg	SW846 8270D
Butyl benzyl phthalate	ND	330	ug/kg	SW846 8270D
3,3'-Dichlorobenzidine	ND	1600	ug/kg	SW846 8270D
bis(2-Ethylhexyl) phthalate	ND	330	ug/kg	SW846 8270D
Di-n-octyl phthalate	ND	330	ug/kg	SW846 8270D

SURROGATE	PERCENT RECOVERY	RECOVERY LIMITS
Nitrobenzene-d5	84	(35 - 100)
2-Fluorobiphenyl	76	(45 - 105)
2,4,6-Tribromophenol	58	(35 - 125)
Terphenyl-d14	78	(30 - 125)
2-Fluorophenol	83	(35 - 105)
Phenol-d5	87	(40 - 100)

NOTE(S):

Calculations are performed before rounding to avoid round-off errors in calculated results.

LABORATORY CONTROL SAMPLE EVALUATION REPORT

GC/MS Semivolatiles

Client Lot #...: F0F030505 Work Order #...: L2JX51AC Matrix.....: SOLID
LCS Lot-Sample#: F0F070000-057
Prep Date.....: 06/07/10 Analysis Date..: 06/15/10
Prep Batch #...: 0158057 Analysis Time..: 21:05
Dilution Factor: 1

PARAMETER	PERCENT RECOVERY	RECOVERY LIMITS	METHOD
Acenaphthene	**90**	**(45 - 110)**	**SW846 8270D**
Pyrene	**96**	**(45 - 125)**	**SW846 8270D**
Phenol	**80**	**(40 - 100)**	**SW846 8270D**
2-Chlorophenol	**78**	**(45 - 105)**	**SW846 8270D**
1,4-Dichlorobenzene	**70**	**(35 - 105)**	**SW846 8270D**
N-Nitrosodi-n-propyl-amine	**98**	**(40 - 115)**	**SW846 8270D**
1,2,4-Trichloro-benzene	**78**	**(45 - 110)**	**SW846 8270D**
4-Chloro-3-methylphenol	**84**	**(45 - 115)**	**SW846 8270D**
4-Nitrophenol	**99**	**(15 - 140)**	**SW846 8270D**
2,4-Dinitrotoluene	**91**	**(50 - 115)**	**SW846 8270D**
Pentachlorophenol	**67**	**(25 - 120)**	**SW846 8270D**

SURROGATE	PERCENT RECOVERY	RECOVERY LIMITS
Nitrobenzene-d5	88	(35 - 100)
2-Fluorobiphenyl	80	(45 - 105)
2,4,6-Tribromophenol	76	(35 - 125)
Terphenyl-d14	80	(30 - 125)
2-Fluorophenol	82	(35 - 105)
Phenol-d5	87	(40 - 100)

NOTE(S):

Calculations are performed before rounding to avoid round-off errors in calculated results.

Bold print denotes control parameters

MATRIX SPIKE SAMPLE EVALUATION REPORT

GC/MS Semivolatiles

Client Lot #...: F0F030505 Work Order #...: L2ER31C7-MS Matrix.....: SOLID
MS Lot-Sample #: F0F030505-001 L2ER31C8-MSD
Date Sampled...: 06/02/10 11:05 Date Received..: 06/03/10
Prep Date.....: 06/07/10 Analysis Date..: 06/16/10
Prep Batch #...: 0158057 Analysis Time..: 03:09
Dilution Factor: 1 % Moisture.....: 9.1

PARAMETER	PERCENT RECOVERY	RECOVERY LIMITS	RPD	RPD LIMITS	METHOD
Acenaphthene	80	(45 - 110)			SW846 8270D
	83	(45 - 110)	4.4	(0-30)	SW846 8270D
Pyrene	82	(45 - 125)			SW846 8270D
	84	(45 - 125)	2.8	(0-30)	SW846 8270D
Phenol	66	(40 - 100)			SW846 8270D
	73	(40 - 100)	10	(0-30)	SW846 8270D
2-Chlorophenol	61	(45 - 105)			SW846 8270D
	68	(45 - 105)	10	(0-30)	SW846 8270D
1,4-Dichlorobenzene	50	(35 - 105)			SW846 8270D
	56	(35 - 105)	11	(0-30)	SW846 8270D
N-Nitrosodi-n-propyl-amine	84	(40 - 115)			SW846 8270D
	93	(40 - 115)	10	(0-30)	SW846 8270D
1,2,4-Trichloro-benzene	56	(45 - 110)			SW846 8270D
	61	(45 - 110)	9.1	(0-30)	SW846 8270D
4-Chloro-3-methylphenol	82	(45 - 115)			SW846 8270D
	82	(45 - 115)	0.0	(0-30)	SW846 8270D
4-Nitrophenol	98	(15 - 140)			SW846 8270D
	101	(15 - 140)	2.7	(0-30)	SW846 8270D
2,4-Dinitrotoluene	84	(50 - 115)			SW846 8270D
	87	(50 - 115)	3.1	(0-30)	SW846 8270D
Pentachlorophenol	51	(25 - 120)			SW846 8270D
	54	(25 - 120)	5.2	(0-30)	SW846 8270D

SURROGATE	PERCENT RECOVERY	RECOVERY LIMITS
Nitrobenzene-d5	73	(35 - 100)
	74	(35 - 100)
2-Fluorobiphenyl	68	(45 - 105)
	66	(45 - 105)
2,4,6-Tribromophenol	71	(35 - 125)
	69	(35 - 125)
Terphenyl-d14	65	(30 - 125)
	75	(30 - 125)
2-Fluorophenol	69	(35 - 105)
	72	(35 - 105)

(Continued on next page)

MATRIX SPIKE SAMPLE EVALUATION REPORT

GC/MS Semivolatiles

Client Lot #...: F0F030505 **Work Order #...:** L2ER31C7-MS **Matrix.....:** SOLID
MS Lot-Sample #: F0F030505-001 L2ER31C8-MSD

SURROGATE	PERCENT RECOVERY	RECOVERY LIMITS
Phenol-d5	76	(40 - 100)
	79	(40 - 100)

NOTE(S):

Calculations are performed before rounding to avoid round-off errors in calculated results.

Bold print denotes control parameters

Results and reporting limits have been adjusted for dry weight.

Tetra Tech EC, Inc.

Client Sample ID: 03-PE-IR56-001

TOTAL Metals

Lot-Sample #...: F0F030505-001 Matrix.....: SOLID
Date Sampled...: 06/02/10 11:05 Date Received..: 06/03/10
% Moisture.....: 9.1

PARAMETER	RESULT	REPORTING LIMIT	UNITS	METHOD	PREPARATION-ANALYSIS DATE	WORK ORDER #
Prep Batch #...: 0158108						
Silver	0.033 B	0.22	mg/kg	SW846 6020A	06/07-06/17/10	L2ER31AV
		Dilution Factor: 1		Analysis Time..: 01:06	MDL.....: 0.008	
Arsenic	1.6 E	1.1	mg/kg	SW846 6020A	06/07-06/17/10	L2ER31AJ
		Dilution Factor: 1		Analysis Time..: 01:06	MDL.....: 0.203	
Barium	117	2.2	mg/kg	SW846 6020A	06/07-06/17/10	L2ER31AK
		Dilution Factor: 1		Analysis Time..: 01:06	MDL.....: 0.057	
Beryllium	0.17 E	0.11	mg/kg	SW846 6020A	06/07-06/17/10	L2ER31AL
		Dilution Factor: 1		Analysis Time..: 01:06	MDL.....: 0.011	
Cadmium	0.090 E	0.055	mg/kg	SW846 6020A	06/07-06/17/10	L2ER31AM
		Dilution Factor: 1		Analysis Time..: 01:06	MDL.....: 0.011	
Cobalt	47.4 E	0.22	mg/kg	SW846 6020A	06/07-06/17/10	L2ER31AN
		Dilution Factor: 1		Analysis Time..: 01:06	MDL.....: 0.043	
Chromium	116 NE	1.1	mg/kg	SW846 6020A	06/07-06/17/10	L2ER31A1
		Dilution Factor: 1		Analysis Time..: 01:06	MDL.....: 0.302	
Copper	24.6 NE*	1.1	mg/kg	SW846 6020A	06/07-06/17/10	L2ER31AP
		Dilution Factor: 1		Analysis Time..: 01:06	MDL.....: 0.0536	
Molybdenum	0.19 B	0.55	mg/kg	SW846 6020A	06/07-06/17/10	L2ER31AR
		Dilution Factor: 1		Analysis Time..: 01:06	MDL.....: 0.077	
Nickel	655 N	2.7	mg/kg	SW846 6020A	06/07-06/17/10	L2ER31AT
		Dilution Factor: 5		Analysis Time..: 15:14	MDL.....: 0.411	
Lead	15.7 N*	0.33	mg/kg	SW846 6020A	06/07-06/17/10	L2ER31AQ
		Dilution Factor: 1		Analysis Time..: 01:06	MDL.....: 0.026	
Antimony	ND N	0.55	mg/kg	SW846 6020A	06/07-06/17/10	L2ER31AH
		Dilution Factor: 1		Analysis Time..: 01:06	MDL.....: 0.164	
Selenium	0.40 BN	0.55	mg/kg	SW846 6020A	06/07-06/17/10	L2ER31AU
		Dilution Factor: 1		Analysis Time..: 01:06	MDL.....: 0.045	

(Continued on next page)

Tetra Tech EC, Inc.

Client Sample ID: 03-PE-IR56-001

TOTAL Metals

Lot-Sample #...: F0F030505-001 Matrix.....: SOLID

PARAMETER	RESULT	REPORTING LIMIT	UNITS	METHOD	PREPARATION-ANALYSIS DATE	WORK ORDER #
Thallium	0.22 E	0.22	mg/kg	SW846 6020A	06/07-06/17/10	L2ER31AW
		Dilution Factor: 1		Analysis Time..: 01:06	MDL.....: 0.058	
Vanadium	30.1 E	1.1	mg/kg	SW846 6020A	06/07-06/17/10	L2ER31AX
		Dilution Factor: 1		Analysis Time..: 01:06	MDL.....: 0.735	
Zinc	41.2 NE*	5.5	mg/kg	SW846 6020A	06/07-06/17/10	L2ER31A0
		Dilution Factor: 1		Analysis Time..: 01:06	MDL.....: 1.33	
Prep Batch #...: 0165252						
Mercury	0.56 N	0.037	mg/kg	SW846 7471B	06/14/10	L2ER31A2
		Dilution Factor: 1		Analysis Time..: 15:28	MDL.....: 0.005	

NOTE(S):

Results and reporting limits have been adjusted for dry weight.

B Estimated result. Result is less than RL.

E Matrix interference.

N Spiked analyte recovery is outside stated control limits.

Tetra Tech EC, Inc.

Client Sample ID: 03-PE-IR56-002

TOTAL Metals

Lot-Sample #...: F0F030505-002 Matrix.....: SOLID
Date Sampled...: 06/02/10 11:10 Date Received..: 06/03/10
% Moisture.....: 9.0

PARAMETER	RESULT	REPORTING LIMIT	UNITS	METHOD	PREPARATION-ANALYSIS DATE	WORK ORDER #
Prep Batch #...: 0158108						
Silver	0.077 B	0.22	mg/kg	SW846 6020A	06/07-06/17/10	L2ETG1A0
		Dilution Factor: 1		Analysis Time..: 01:41	MDL.....: 0.008	
Arsenic	1.6 E	1.1	mg/kg	SW846 6020A	06/07-06/17/10	L2ETG1AM
		Dilution Factor: 1		Analysis Time..: 01:41	MDL.....: 0.203	
Barium	120	2.2	mg/kg	SW846 6020A	06/07-06/17/10	L2ETG1AN
		Dilution Factor: 1		Analysis Time..: 01:41	MDL.....: 0.057	
Beryllium	0.24 E	0.11	mg/kg	SW846 6020A	06/07-06/17/10	L2ETG1AP
		Dilution Factor: 1		Analysis Time..: 01:41	MDL.....: 0.011	
Cadmium	0.094 E	0.055	mg/kg	SW846 6020A	06/07-06/17/10	L2ETG1AQ
		Dilution Factor: 1		Analysis Time..: 01:41	MDL.....: 0.011	
Cobalt	32.1 E	0.22	mg/kg	SW846 6020A	06/07-06/17/10	L2ETG1AR
		Dilution Factor: 1		Analysis Time..: 01:41	MDL.....: 0.043	
Chromium	158 NE	1.1	mg/kg	SW846 6020A	06/07-06/17/10	L2ETG1AC
		Dilution Factor: 1		Analysis Time..: 01:41	MDL.....: 0.302	
Copper	33.2 NE*	1.1	mg/kg	SW846 6020A	06/07-06/17/10	L2ETG1AT
		Dilution Factor: 1		Analysis Time..: 01:41	MDL.....: 0.0536	
Molybdenum	0.19 B	0.55	mg/kg	SW846 6020A	06/07-06/17/10	L2ETG1AV
		Dilution Factor: 1		Analysis Time..: 01:41	MDL.....: 0.077	
Nickel	392 N	0.55	mg/kg	SW846 6020A	06/07-06/17/10	L2ETG1AW
		Dilution Factor: 1		Analysis Time..: 15:48	MDL.....: 0.0822	
Lead	26.8 N*	0.33	mg/kg	SW846 6020A	06/07-06/17/10	L2ETG1AU
		Dilution Factor: 1		Analysis Time..: 01:41	MDL.....: 0.026	
Antimony	0.29 BN	0.55	mg/kg	SW846 6020A	06/07-06/17/10	L2ETG1AL
		Dilution Factor: 1		Analysis Time..: 01:41	MDL.....: 0.164	
Selenium	0.52 BN	0.55	mg/kg	SW846 6020A	06/07-06/17/10	L2ETG1AX
		Dilution Factor: 1		Analysis Time..: 01:41	MDL.....: 0.045	

(Continued on next page)

Tetra Tech EC, Inc.

Client Sample ID: 03-PE-IR56-002

TOTAL Metals

Lot-Sample #...: F0F030505-002 Matrix.....: SOLID

PARAMETER	RESULT	REPORTING LIMIT	UNITS	METHOD	PREPARATION-ANALYSIS DATE	WORK ORDER #
Thallium	0.17 BE	0.22	mg/kg	SW846 6020A	06/07-06/17/10	L2ETG1A1
		Dilution Factor: 1		Analysis Time..: 01:41	MDL.....: 0.058	
Vanadium	38.8 E	1.1	mg/kg	SW846 6020A	06/07-06/17/10	L2ETG1A2
		Dilution Factor: 1		Analysis Time..: 01:41	MDL.....: 0.735	
Zinc	47.0 NE*	5.5	mg/kg	SW846 6020A	06/07-06/17/10	L2ETG1AA
		Dilution Factor: 1		Analysis Time..: 01:41	MDL.....: 1.33	
Prep Batch #...: 0165252						
Mercury	0.21 N	0.037	mg/kg	SW846 7471B	06/14/10	L2ETG1AD
		Dilution Factor: 1		Analysis Time..: 15:38	MDL.....: 0.005	

NOTE(S):

Results and reporting limits have been adjusted for dry weight.

B Estimated result. Result is less than RL.

E Matrix interference.

N Spiked analyte recovery is outside stated control limits.

Tetra Tech EC, Inc.

Client Sample ID: 03-PE-IR56-003

TOTAL Metals

Lot-Sample #...: F0F030505-003 Matrix.....: SOLID
Date Sampled...: 06/02/10 11:20 Date Received..: 06/03/10
% Moisture.....: 5.6

PARAMETER	RESULT	REPORTING LIMIT	UNITS	METHOD	PREPARATION-ANALYSIS DATE	WORK ORDER #
Prep Batch #...: 0158108						
Silver	0.14 B	0.21	mg/kg	SW846 6020A	06/07-06/17/10	L2ETJ1A0
		Dilution Factor: 1		Analysis Time..: 01:48	MDL.....: 0.008	
Arsenic	1.6 E	1.1	mg/kg	SW846 6020A	06/07-06/17/10	L2ETJ1AM
		Dilution Factor: 1		Analysis Time..: 01:48	MDL.....: 0.203	
Barium	178	2.1	mg/kg	SW846 6020A	06/07-06/17/10	L2ETJ1AN
		Dilution Factor: 1		Analysis Time..: 01:48	MDL.....: 0.057	
Beryllium	0.17 E	0.11	mg/kg	SW846 6020A	06/07-06/17/10	L2ETJ1AP
		Dilution Factor: 1		Analysis Time..: 01:48	MDL.....: 0.011	
Cadmium	0.085 E	0.053	mg/kg	SW846 6020A	06/07-06/17/10	L2ETJ1AQ
		Dilution Factor: 1		Analysis Time..: 01:48	MDL.....: 0.011	
Cobalt	64.3 E	0.21	mg/kg	SW846 6020A	06/07-06/17/10	L2ETJ1AR
		Dilution Factor: 1		Analysis Time..: 01:48	MDL.....: 0.043	
Chromium	164 NE	1.1	mg/kg	SW846 6020A	06/07-06/17/10	L2ETJ1AC
		Dilution Factor: 1		Analysis Time..: 01:48	MDL.....: 0.302	
Copper	26.4 NE*	1.1	mg/kg	SW846 6020A	06/07-06/17/10	L2ETJ1AT
		Dilution Factor: 1		Analysis Time..: 01:48	MDL.....: 0.0536	
Molybdenum	0.19 B	0.53	mg/kg	SW846 6020A	06/07-06/17/10	L2ETJ1AV
		Dilution Factor: 1		Analysis Time..: 01:48	MDL.....: 0.077	
Nickel	715 N	2.6	mg/kg	SW846 6020A	06/07-06/17/10	L2ETJ1AW
		Dilution Factor: 5		Analysis Time..: 15:55	MDL.....: 0.411	
Lead	12.5 N*	0.32	mg/kg	SW846 6020A	06/07-06/17/10	L2ETJ1AU
		Dilution Factor: 1		Analysis Time..: 01:48	MDL.....: 0.026	
Antimony	ND N	0.53	mg/kg	SW846 6020A	06/07-06/17/10	L2ETJ1AL
		Dilution Factor: 1		Analysis Time..: 01:48	MDL.....: 0.164	
Selenium	0.41 BN	0.53	mg/kg	SW846 6020A	06/07-06/17/10	L2ETJ1AX
		Dilution Factor: 1		Analysis Time..: 01:48	MDL.....: 0.045	

(Continued on next page)

Tetra Tech EC, Inc.

Client Sample ID: 03-PE-IR56-003

TOTAL Metals

Lot-Sample #...; F0F030505-003 Matrix.....: SOLID

PARAMETER	RESULT	REPORTING LIMIT	UNITS	METHOD	PREPARATION-ANALYSIS DATE	WORK ORDER #
Thallium	0.12 BE	0.21	mg/kg	SW846 6020A	06/07-06/17/10	L2ETJ1A1
		Dilution Factor: 1		Analysis Time..: 01:48	MDL.....: 0.058	
Vanadium	33.5 E	1.1	mg/kg	SW846 6020A	06/07-06/17/10	L2ETJ1A2
		Dilution Factor: 1		Analysis Time..: 01:48	MDL.....: 0.735	
Zinc	42.7 NE*	5.3	mg/kg	SW846 6020A	06/07-06/17/10	L2ETJ1AA
		Dilution Factor: 1		Analysis Time..: 01:48	MDL.....: 1.33	
Prep Batch #...: 0165252						
Mercury	0.19 N	0.035	mg/kg	SW846 7471B	06/14/10	L2ETJ1AD
		Dilution Factor: 1		Analysis Time..: 15:41	MDL.....: 0.005	

NOTE(S):

Results and reporting limits have been adjusted for dry weight.

B Estimated result. Result is less than RL.

E Matrix interference.

N Spiked analyte recovery is outside stated control limits.

Tetra Tech EC, Inc.

Client Sample ID: 03-PE-IR56-004

TOTAL Metals

Lot-Sample #...: F0F030505-004 Matrix.....: SOLID
Date Sampled...: 06/02/10 11:25 Date Received..: 06/03/10
% Moisture.....: 4.8

PARAMETER	RESULT	REPORTING LIMIT	UNITS	METHOD	PREPARATION-ANALYSIS DATE	WORK ORDER #
Prep Batch #...: 0158108						
Silver	0.81	0.21	mg/kg	SW846 6020A	06/07-06/17/10	L2ETL1A0
		Dilution Factor: 1		Analysis Time..: 01:54	MDL.....: 0.008	
Arsenic	2.6 E	1	mg/kg	SW846 6020A	06/07-06/17/10	L2ETL1AM
		Dilution Factor: 1		Analysis Time..: 01:54	MDL.....: 0.203	
Barium	138	2.1	mg/kg	SW846 6020A	06/07-06/17/10	L2ETL1AN
		Dilution Factor: 1		Analysis Time..: 01:54	MDL.....: 0.057	
Beryllium	0.19 E	0.1	mg/kg	SW846 6020A	06/07-06/17/10	L2ETL1AP
		Dilution Factor: 1		Analysis Time..: 01:54	MDL.....: 0.011	
Cadmium	0.12 E	0.052	mg/kg	SW846 6020A	06/07-06/17/10	L2ETL1AQ
		Dilution Factor: 1		Analysis Time..: 01:54	MDL.....: 0.011	
Cobalt	55.6 E	0.21	mg/kg	SW846 6020A	06/07-06/17/10	L2ETL1AR
		Dilution Factor: 1		Analysis Time..: 01:54	MDL.....: 0.043	
Chromium	310 NE	1	mg/kg	SW846 6020A	06/07-06/17/10	L2ETL1AC
		Dilution Factor: 1		Analysis Time..: 01:54	MDL.....: 0.302	
Copper	40.4 NE*	1	mg/kg	SW846 6020A	06/07-06/17/10	L2ETL1AT
		Dilution Factor: 1		Analysis Time..: 01:54	MDL.....: 0.0536	
Molybdenum	0.31 B	0.52	mg/kg	SW846 6020A	06/07-06/17/10	L2ETL1AV
		Dilution Factor: 1		Analysis Time..: 01:54	MDL.....: 0.077	
Nickel	984 N	2.6	mg/kg	SW846 6020A	06/07-06/17/10	L2ETL1AW
		Dilution Factor: 5		Analysis Time..: 16:02	MDL.....: 0.411	
Lead	24.2 N*	0.31	mg/kg	SW846 6020A	06/07-06/17/10	L2ETL1AU
		Dilution Factor: 1		Analysis Time..: 01:54	MDL.....: 0.026	
Antimony	ND N	0.52	mg/kg	SW846 6020A	06/07-06/17/10	L2ETL1AL
		Dilution Factor: 1		Analysis Time..: 01:54	MDL.....: 0.164	
Selenium	0.47 BN	0.52	mg/kg	SW846 6020A	06/07-06/17/10	L2ETL1AX
		Dilution Factor: 1		Analysis Time..: 01:54	MDL.....: 0.045	

(Continued on next page)

Tetra Tech EC, Inc.

Client Sample ID: 03-PE-IR56-004

TOTAL Metals

Lot-Sample #...: F0F030505-004 Matrix.....: SOLID

PARAMETER	RESULT	REPORTING LIMIT	UNITS	METHOD	PREPARATION-ANALYSIS DATE	WORK ORDER #
Thallium	0.099 BE	0.21	mg/kg	SW846 6020A	06/07-06/17/10	L2ETL1A1
		Dilution Factor: 1		Analysis Time..: 01:54	MDL.....: 0.058	
Vanadium	47.4 E	1	mg/kg	SW846 6020A	06/07-06/17/10	L2ETL1A2
		Dilution Factor: 1		Analysis Time..: 01:54	MDL.....: 0.735	
Zinc	52.1 NE*	5.2	mg/kg	SW846 6020A	06/07-06/17/10	L2ETL1AA
		Dilution Factor: 1		Analysis Time..: 01:54	MDL.....: 1.33	
Prep Batch #...: 0165252						
Mercury	0.29 N	0.035	mg/kg	SW846 7471B	06/14/10	L2ETL1AD
		Dilution Factor: 1		Analysis Time..: 15:44	MDL.....: 0.005	

NOTE(S):

Results and reporting limits have been adjusted for dry weight.

E Matrix interference.

B Estimated result. Result is less than RL.

N Spiked analyte recovery is outside stated control limits.

Tetra Tech EC, Inc.

Client Sample ID: 03-PE-IR56-005

TOTAL Metals

Lot-Sample #...: F0F030505-005 Matrix.....: SOLID
Date Sampled...: 06/02/10 11:30 Date Received..: 06/03/10
% Moisture.....: 4.0

PARAMETER	RESULT	REPORTING LIMIT	UNITS	METHOD	PREPARATION-ANALYSIS DATE	WORK ORDER #
Prep Batch #...: 0158108						
Silver	0.65	0.21	mg/kg	SW846 6020A	06/07-06/17/10	L2ETM1A0
		Dilution Factor: 1		Analysis Time..: 02:16	MDL.....: 0.008	
Arsenic	3.6 E	1	mg/kg	SW846 6020A	06/07-06/17/10	L2ETM1AM
		Dilution Factor: 1		Analysis Time..: 02:16	MDL.....: 0.203	
Barium	278	2.1	mg/kg	SW846 6020A	06/07-06/17/10	L2ETM1AN
		Dilution Factor: 1		Analysis Time..: 02:16	MDL.....: 0.057	
Beryllium	0.33 E	0.1	mg/kg	SW846 6020A	06/07-06/17/10	L2ETM1AP
		Dilution Factor: 1		Analysis Time..: 02:16	MDL.....: 0.011	
Cadmium	0.15 E	0.052	mg/kg	SW846 6020A	06/07-06/17/10	L2ETM1AQ
		Dilution Factor: 1		Analysis Time..: 02:16	MDL.....: 0.011	
Cobalt	61.7 E	0.21	mg/kg	SW846 6020A	06/07-06/17/10	L2ETM1AR
		Dilution Factor: 1		Analysis Time..: 02:16	MDL.....: 0.043	
Chromium	267 NE	1	mg/kg	SW846 6020A	06/07-06/17/10	L2ETM1AC
		Dilution Factor: 1		Analysis Time..: 02:16	MDL.....: 0.302	
Copper	47.3 NE*	1	mg/kg	SW846 6020A	06/07-06/17/10	L2ETM1AT
		Dilution Factor: 1		Analysis Time..: 02:16	MDL.....: 0.0536	
Molybdenum	0.37 B	0.52	mg/kg	SW846 6020A	06/07-06/17/10	L2ETM1AV
		Dilution Factor: 1		Analysis Time..: 02:16	MDL.....: 0.077	
Nickel	969 N	2.6	mg/kg	SW846 6020A	06/07-06/17/10	L2ETM1AW
		Dilution Factor: 5		Analysis Time..: 16:23	MDL.....: 0.411	
Lead	20.9 N*	0.31	mg/kg	SW846 6020A	06/07-06/17/10	L2ETM1AU
		Dilution Factor: 1		Analysis Time..: 02:16	MDL.....: 0.026	
Antimony	ND N	0.52	mg/kg	SW846 6020A	06/07-06/17/10	L2ETM1AL
		Dilution Factor: 1		Analysis Time..: 02:16	MDL.....: 0.164	
Selenium	0.84 N	0.52	mg/kg	SW846 6020A	06/07-06/17/10	L2ETM1AX
		Dilution Factor: 1		Analysis Time..: 02:16	MDL.....: 0.045	

(Continued on next page)

Tetra Tech EC, Inc.

Client Sample ID: 03-PE-IR56-005

TOTAL Metals

Lot-Sample #...: F0F030505-005 Matrix.....: SOLID

PARAMETER	RESULT	REPORTING LIMIT	UNITS	METHOD	PREPARATION-ANALYSIS DATE	WORK ORDER #
Thallium	0.096 BE	0.21	mg/kg	SW846 6020A	06/07-06/17/10	L2ETM1A1
		Dilution Factor: 1		Analysis Time..: 02:16	MDL.....: 0.058	
Vanadium	66.9 E	1	mg/kg	SW846 6020A	06/07-06/17/10	L2ETM1A2
		Dilution Factor: 1		Analysis Time..: 02:16	MDL.....: 0.735	
Zinc	70.9 NE*	5.2	mg/kg	SW846 6020A	06/07-06/17/10	L2ETM1AA
		Dilution Factor: 1		Analysis Time..: 02:16	MDL.....: 1.33	
Prep Batch #...: 0165252						
Mercury	0.19 N	0.035	mg/kg	SW846 7471B	06/14/10	L2ETM1AD
		Dilution Factor: 1		Analysis Time..: 15:46	MDL.....: 0.005	

NOTE(S):

Results and reporting limits have been adjusted for dry weight.

E Matrix interference.

B Estimated result. Result is less than RL.

N Spiked analyte recovery is outside stated control limits.

METHOD BLANK REPORT

TOTAL Metals

Client Lot #...: F0F030505 **Matrix.....:** SOLID

PARAMETER	RESULT	REPORTING LIMIT	UNITS	METHOD	PREPARATION-ANALYSIS DATE	WORK ORDER #
MB Lot-Sample #: F0F070000-108 **Prep Batch #...:** 0158108						
Antimony	ND	0.5	mg/kg	SW846 6020A	06/07-06/17/10	L2JP61AA
		Dilution Factor: 1				
		Analysis Time..: 00:51				
Arsenic	ND	1.0	mg/kg	SW846 6020A	06/07-06/17/10	L2JP61AC
		Dilution Factor: 1				
		Analysis Time..: 00:51				
Barium	ND	2.0	mg/kg	SW846 6020A	06/07-06/17/10	L2JP61AD
		Dilution Factor: 1				
		Analysis Time..: 00:51				
Beryllium	ND	0.1	mg/kg	SW846 6020A	06/07-06/17/10	L2JP61AE
		Dilution Factor: 1				
		Analysis Time..: 00:51				
Cadmium	ND	0.05	mg/kg	SW846 6020A	06/07-06/17/10	L2JP61AF
		Dilution Factor: 1				
		Analysis Time..: 00:51				
Chromium	ND	1.0	mg/kg	SW846 6020A	06/07-06/17/10	L2JP61AT
		Dilution Factor: 1				
		Analysis Time..: 00:51				
Cobalt	ND	0.2	mg/kg	SW846 6020A	06/07-06/17/10	L2JP61AG
		Dilution Factor: 1				
		Analysis Time..: 00:51				
Copper	ND	1.0	mg/kg	SW846 6020A	06/07-06/17/10	L2JP61AH
		Dilution Factor: 1				
		Analysis Time..: 00:51				
Lead	ND	0.3	mg/kg	SW846 6020A	06/07-06/17/10	L2JP61AJ
		Dilution Factor: 1				
		Analysis Time..: 00:51				
Molybdenum	ND	0.5	mg/kg	SW846 6020A	06/07-06/17/10	L2JP61AK
		Dilution Factor: 1				
		Analysis Time..: 00:51				
Nickel	ND	0.5	mg/kg	SW846 6020A	06/07-06/17/10	L2JP61AL
		Dilution Factor: 1				
		Analysis Time..: 15:00				

(Continued on next page)

METHOD BLANK REPORT

TOTAL Metals

Client Lot #...: F0F030505 **Matrix.....:** SOLID

PARAMETER	RESULT	REPORTING LIMIT	UNITS	METHOD	PREPARATION-ANALYSIS DATE	WORK ORDER #
Selenium	ND	0.5	mg/kg	SW846 6020A	06/07-06/17/10	L2JP61AM
		Dilution Factor: 1				
		Analysis Time..: 00:51				
Silver	ND	0.2	mg/kg	SW846 6020A	06/07-06/17/10	L2JP61AN
		Dilution Factor: 1				
		Analysis Time..: 00:51				
Thallium	ND	0.2	mg/kg	SW846 6020A	06/07-06/17/10	L2JP61AP
		Dilution Factor: 1				
		Analysis Time..: 00:51				
Vanadium	ND	1.0	mg/kg	SW846 6020A	06/07-06/17/10	L2JP61AQ
		Dilution Factor: 1				
		Analysis Time..: 00:51				
Zinc	ND	5.0	mg/kg	SW846 6020A	06/07-06/17/10	L2JP61AR
		Dilution Factor: 1				
		Analysis Time..: 00:51				

MB Lot-Sample #: F0F140000-252 **Prep Batch #...:** 0165252

Mercury	**0.0055 B**	**0.033**	**mg/kg**	**SW846 7471B**	**06/14/10**	**L2V3C1AA**
		Dilution Factor: 1				
		Analysis Time..: 16:53				

NOTE(S):

Calculations are performed before rounding to avoid round-off errors in calculated results.

B Estimated result. Result is less than RL.

LABORATORY CONTROL SAMPLE EVALUATION REPORT

TOTAL Metals

Client Lot #...: F0F030505 **Matrix.....:** SOLID

PARAMETER	PERCENT RECOVERY	RECOVERY LIMITS	METHOD	PREPARATION-ANALYSIS DATE	WORK ORDER #
LCS Lot-Sample#: F0F070000-108 **Prep Batch #...:** 0158108					
Antimony	98	(80 - 120)	SW846 6020A	06/07-06/17/10	L2JP61AU
		Dilution Factor: 1	Analysis Time..: 00:59		
Arsenic	96	(80 - 120)	SW846 6020A	06/07-06/17/10	L2JP61AV
		Dilution Factor: 1	Analysis Time..: 00:59		
Barium	102	(80 - 120)	SW846 6020A	06/07-06/17/10	L2JP61AW
		Dilution Factor: 1	Analysis Time..: 00:59		
Beryllium	93	(80 - 120)	SW846 6020A	06/07-06/17/10	L2JP61AX
		Dilution Factor: 1	Analysis Time..: 00:59		
Cadmium	96	(80 - 120)	SW846 6020A	06/07-06/17/10	L2JP61A0
		Dilution Factor: 1	Analysis Time..: 00:59		
Cobalt	99	(80 - 120)	SW846 6020A	06/07-06/17/10	L2JP61A1
		Dilution Factor: 1	Analysis Time..: 00:59		
Copper	95	(80 - 120)	SW846 6020A	06/07-06/17/10	L2JP61A2
		Dilution Factor: 1	Analysis Time..: 00:59		
Lead	106	(80 - 120)	SW846 6020A	06/07-06/17/10	L2JP61A3
		Dilution Factor: 1	Analysis Time..: 00:59		
Molybdenum	100	(80 - 120)	SW846 6020A	06/07-06/17/10	L2JP61A4
		Dilution Factor: 1	Analysis Time..: 00:59		
Nickel	99	(80 - 120)	SW846 6020A	06/07-06/17/10	L2JP61A5
		Dilution Factor: 1	Analysis Time..: 15:07		
Selenium	90	(80 - 120)	SW846 6020A	06/07-06/17/10	L2JP61A6
		Dilution Factor: 1	Analysis Time..: 00:59		
Silver	99	(75 - 120)	SW846 6020A	06/07-06/17/10	L2JP61A7
		Dilution Factor: 1	Analysis Time..: 00:59		
Thallium	109	(80 - 120)	SW846 6020A	06/07-06/17/10	L2JP61A8
		Dilution Factor: 1	Analysis Time..: 00:59		
Vanadium	99	(80 - 120)	SW846 6020A	06/07-06/17/10	L2JP61A9
		Dilution Factor: 1	Analysis Time..: 00:59		

(Continued on next page)

LABORATORY CONTROL SAMPLE EVALUATION REPORT

TOTAL Metals

Client Lot #...: F0F030505 **Matrix.....:** SOLID

PARAMETER	PERCENT RECOVERY	RECOVERY LIMITS	METHOD	PREPARATION-ANALYSIS DATE	WORK ORDER #
Zinc	96	(80 - 120)	SW846 6020A	06/07-06/17/10	L2JP61CA
		Dilution Factor: 1	Analysis Time..: 00:59		
Chromium	97	(80 - 120)	SW846 6020A	06/07-06/17/10	L2JP61CC
		Dilution Factor: 1	Analysis Time..: 00:59		

LCS Lot-Sample#: F0F140000-252 **Prep Batch #...:** 0165252

Mercury	100	(80 - 120)	SW846 7471B	06/14/10	L2V3C1AC
		Dilution Factor: 1	Analysis Time..: 15:24		

NOTE(S):

Calculations are performed before rounding to avoid round-off errors in calculated results.

MATRIX SPIKE SAMPLE EVALUATION REPORT

TOTAL Metals

Client Lot #...: F0F030505 **Matrix.....:** SOLID
Date Sampled...: 06/02/10 11:05 **Date Received..:** 06/03/10

MS Lot-Sample #: F0F030505-001 **Prep Batch #...:** 0158108

% Moisture.....: 9.1

PARAMETER	PERCENT RECOVERY	RECOVERY LIMITS	RPD	RPD LIMITS	METHOD	PREPARATION-ANALYSIS DATE	WORK ORDER #
Antimony	37 N	(80 - 120)			SW846 6020A	06/07-06/17/10	L2ER31A3
	33 N	(80 - 120)	10	(0-20)	SW846 6020A	06/07-06/17/10	L2ER31A4
		Dilution Factor: 1					
		Analysis Time..: 01:20					
Arsenic	92	(80 - 120)			SW846 6020A	06/07-06/17/10	L2ER31A5
	85	(80 - 120)	8.1	(0-20)	SW846 6020A	06/07-06/17/10	L2ER31A6
		Dilution Factor: 1					
		Analysis Time..: 01:20					
Barium	110	(80 - 120)			SW846 6020A	06/07-06/17/10	L2ER31A7
	89	(80 - 120)	10	(0-20)	SW846 6020A	06/07-06/17/10	L2ER31A8
		Dilution Factor: 1					
		Analysis Time..: 01:20					
Beryllium	92	(80 - 120)			SW846 6020A	06/07-06/17/10	L2ER31A9
	88	(80 - 120)	5.0	(0-20)	SW846 6020A	06/07-06/17/10	L2ER31CA
		Dilution Factor: 1					
		Analysis Time..: 01:20					
Cadmium	99	(80 - 120)			SW846 6020A	06/07-06/17/10	L2ER31CC
	90	(80 - 120)	9.1	(0-20)	SW846 6020A	06/07-06/17/10	L2ER31CD
		Dilution Factor: 1					
		Analysis Time..: 01:20					
Chromium	185 N	(80 - 120)			SW846 6020A	06/07-06/17/10	L2ER31C3
	200 N	(80 - 120)	5.2	(0-20)	SW846 6020A	06/07-06/17/10	L2ER31C4
		Dilution Factor: 1					
		Analysis Time..: 01:20					
Cobalt	86	(80 - 120)			SW846 6020A	06/07-06/17/10	L2ER31CE
	85	(80 - 120)	0.69	(0-20)	SW846 6020A	06/07-06/17/10	L2ER31CF
		Dilution Factor: 1					
		Analysis Time..: 01:20					
Copper	175 N	(80 - 120)			SW846 6020A	06/07-06/17/10	L2ER31CG
	93 *	(80 - 120)	52	(0-20)	SW846 6020A	06/07-06/17/10	L2ER31CH
		Dilution Factor: 1					
		Analysis Time..: 01:20					

(Continued on next page)

MATRIX SPIKE SAMPLE EVALUATION REPORT

TOTAL Metals

Client Lot #...: F0F030505 **Matrix.....:** SOLID
Date Sampled...: 06/02/10 11:05 **Date Received..:** 06/03/10

PARAMETER	PERCENT RECOVERY	RECOVERY LIMITS	RPD	RPD LIMITS	METHOD	PREPARATION-ANALYSIS DATE	WORK ORDER #
Lead	141 N	(80 - 120)			SW846 6020A	06/07-06/17/10	L2ER31CJ
	99 *	(80 - 120)	31	(0-20)	SW846 6020A	06/07-06/17/10	L2ER31CK
		Dilution Factor: 1					
		Analysis Time..: 01:20					
Molybdenum	97	(80 - 120)			SW846 6020A	06/07-06/17/10	L2ER31CL
	90	(80 - 120)	6.9	(0-20)	SW846 6020A	06/07-06/17/10	L2ER31CM
		Dilution Factor: 1					
		Analysis Time..: 01:20					
Nickel	36 N	(80 - 120)			SW846 6020A	06/07-06/17/10	L2ER31CN
	172 N	(80 - 120)	19	(0-20)	SW846 6020A	06/07-06/17/10	L2ER31CP
		Dilution Factor: 5					
		Analysis Time..: 15:28					
Selenium	79 N	(80 - 120)			SW846 6020A	06/07-06/17/10	L2ER31CQ
	76 N	(80 - 120)	4.0	(0-20)	SW846 6020A	06/07-06/17/10	L2ER31CR
		Dilution Factor: 1					
		Analysis Time..: 01:20					
Silver	99	(75 - 120)			SW846 6020A	06/07-06/17/10	L2ER31CT
	90	(75 - 120)	9.2	(0-20)	SW846 6020A	06/07-06/17/10	L2ER31CU
		Dilution Factor: 1					
		Analysis Time..: 01:20					
Thallium	113	(80 - 120)			SW846 6020A	06/07-06/17/10	L2ER31CV
	103	(80 - 120)	9.3	(0-20)	SW846 6020A	06/07-06/17/10	L2ER31CW
		Dilution Factor: 1					
		Analysis Time..: 01:20					
Vanadium	114	(80 - 120)			SW846 6020A	06/07-06/17/10	L2ER31CX
	100	(80 - 120)	10	(0-20)	SW846 6020A	06/07-06/17/10	L2ER31C0
		Dilution Factor: 1					
		Analysis Time..: 01:20					
Zinc	225 N	(80 - 120)			SW846 6020A	06/07-06/17/10	L2ER31C1
	83 *	(80 - 120)	74	(0-20)	SW846 6020A	06/07-06/17/10	L2ER31C2
		Dilution Factor: 1					
		Analysis Time..: 01:20					

MS Lot-Sample #: F0F030505-001 **Prep Batch #...:** 0165252

% Moisture.....: 9.1

(Continued on next page)

MATRIX SPIKE SAMPLE EVALUATION REPORT

TOTAL Metals

Client Lot #...: F0F030505 **Matrix.....:** SOLID
Date Sampled...: 06/02/10 11:05 **Date Received..:** 06/03/10

PARAMETER	PERCENT RECOVERY	RECOVERY LIMITS	RPD	RPD LIMITS	METHOD	PREPARATION-ANALYSIS DATE	WORK ORDER #
Mercury	0 N	(80 - 120)			SW846 7471B	06/14/10	L2ER31C9
	0 N	(80 - 120)	0.0	(0-20)	SW846 7471B	06/14/10	L2ER31DA

Dilution Factor: 1
Analysis Time..: 15:33

NOTE(S):

Calculations are performed before rounding to avoid round-off errors in calculated results.

Results and reporting limits have been adjusted for dry weight.

N Spiked analyte recovery is outside stated control limits.

* Relative percent difference (RPD) is outside stated control limits.

Tetra Tech EC, Inc.

Client Sample ID: 03-PE-IR56-001

General Chemistry

Lot-Sample #...: F0F030505-001 Work Order #...: L2ER3 Matrix.....: SOLID
Date Sampled...: 06/02/10 11:05 Date Received..: 06/03/10
% Moisture.....: 9.1

PARAMETER	RESULT	RL	UNITS	METHOD	PREPARATION-ANALYSIS DATE	PREP BATCH #
Oil and Grease	154	66.0	mg/kg	CFR136A 1664A HEM	06/10-06/11/10	0160404
		Dilution Factor: 1		Analysis Time..: 00:00	MDL.....: 47.3	
Percent Moisture	9.1	0.10	%	MCAWW 160.3 MOD	06/07-06/08/10	0156014
		Dilution Factor: 1		Analysis Time..: 00:00	MDL.....:	

NOTE(S):

RL Reporting Limit

Results and reporting limits have been adjusted for dry weight.

Tetra Tech EC, Inc.

Client Sample ID: 03-PE-IR56-002

General Chemistry

Lot-Sample #...: F0F030505-002 Work Order #...: L2ETG Matrix.....: SOLID
Date Sampled...: 06/02/10 11:10 Date Received..: 06/03/10
% Moisture.....: 9.0

PARAMETER	RESULT	RL	UNITS	METHOD	PREPARATION-ANALYSIS DATE	PREP BATCH #
Oil and Grease	223	66.0	mg/kg	CFR136A 1664A HEM	06/10-06/11/10	0160404
		Dilution Factor: 1		Analysis Time..: 00:00	MDL.....: 47.3	
Percent Moisture	9.0	0.10	%	MCAWW 160.3 MOD	06/07-06/08/10	0156014
		Dilution Factor: 1		Analysis Time..: 00:00	MDL.....:	

NOTE(S):

RL Reporting Limit

Results and reporting limits have been adjusted for dry weight.

Tetra Tech EC, Inc.

Client Sample ID: 03-PE-IR56-003

General Chemistry

Lot-Sample #...: F0F030505-003 Work Order #...: L2ETJ Matrix.....: SOLID
Date Sampled...: 06/02/10 11:20 Date Received..: 06/03/10
% Moisture.....: 5.6

PARAMETER	RESULT	RL	UNITS	METHOD	PREPARATION-ANALYSIS DATE	PREP BATCH #
Oil and Grease	127	63.6	mg/kg	CFR136A 1664A HEM	06/10-06/11/10	0160404
		Dilution Factor: 1		Analysis Time..: 00:00	MDL.....: 45.6	
Percent Moisture	5.6	0.10	%	MCAWW 160.3 MOD	06/07-06/08/10	0156014
		Dilution Factor: 1		Analysis Time..: 00:00	MDL.....:	

NOTE(S):

RL Reporting Limit

Results and reporting limits have been adjusted for dry weight.

Tetra Tech EC, Inc.

Client Sample ID: 03-PE-IR56-004

General Chemistry

Lot-Sample #...: F0F030505-004 Work Order #...: L2ETL Matrix.....: SOLID
Date Sampled...: 06/02/10 11:25 Date Received..: 06/03/10
% Moisture.....: 4.8

PARAMETER	RESULT	RL	UNITS	METHOD	PREPARATION-ANALYSIS DATE	PREP BATCH #
Oil and Grease	136	63.0	mg/kg	CFR136A 1664A HEM	06/10-06/11/10	0160404
		Dilution Factor: 1		Analysis Time..: 00:00	MDL.....: 45.2	
Percent Moisture	4.8	0.10	%	MCAWW 160.3 MOD	06/07-06/08/10	0156014
		Dilution Factor: 1		Analysis Time..: 00:00	MDL.....:	

NOTE(S):

RL Reporting Limit

Results and reporting limits have been adjusted for dry weight.

Tetra Tech EC, Inc.

Client Sample ID: 03-PE-IR56-005

General Chemistry

Lot-Sample #...: F0F030505-005 Work Order #...: L2ETM Matrix.....: SOLID
Date Sampled...: 06/02/10 11:30 Date Received..: 06/03/10
% Moisture.....: 4.0

PARAMETER	RESULT	RL	UNITS	METHOD	PREPARATION-ANALYSIS DATE	PREP BATCH #
Oil and Grease	167	62.5	mg/kg	CFR136A 1664A HEM	06/10-06/11/10	0160404
		Dilution Factor: 1		Analysis Time..: 00:00	MDL.....: 44.8	
Percent Moisture	4.0	0.10	%	MCAWW 160.3 MOD	06/07-06/08/10	0156014
		Dilution Factor: 1		Analysis Time..: 00:00	MDL.....:	

NOTE(S):

RL Reporting Limit

Results and reporting limits have been adjusted for dry weight.

METHOD BLANK REPORT

General Chemistry

Client Lot #...: F0F030505 Matrix.....: SOLID

PARAMETER	RESULT	REPORTING LIMIT	UNITS	METHOD	PREPARATION-ANALYSIS DATE	PREP BATCH #
Oil and Grease		Work Order #: L2WAW1AA		MB Lot-Sample #:	F0F090000-404	
	ND	60.0	mg/kg	CFR136A 1664A HEM	06/10-06/11/10	0160404
		Dilution Factor: 1				
		Analysis Time..: 00:00				

NOTE(S):

Calculations are performed before rounding to avoid round-off errors in calculated results.

LABORATORY CONTROL SAMPLE EVALUATION REPORT

General Chemistry

Lot-Sample #...: F0F030505 Matrix.....: SOLID

PARAMETER	PERCENT RECOVERY	RECOVERY LIMITS	RPD	RPD LIMITS	METHOD	PREPARATION-ANALYSIS DATE	PREP BATCH #
Oil and Grease		WO#:L2WAW1AC-LCS/L2WAW1AD-LCSD				LCS Lot-Sample#: F0F090000-404	
	106 N	(58 - 103)			CFR136A 1664A HEM	06/10-06/11/10	0160404
	97	(58 - 103)	9.1	(0-200)	CFR136A 1664A HEM	06/10-06/11/10	0160404

Dilution Factor: 1 Analysis Time..: 00:00

NOTE(S):

Calculations are performed before rounding to avoid round-off errors in calculated results.

N Spiked analyte recovery is outside stated control limits.

MATRIX SPIKE SAMPLE EVALUATION REPORT

General Chemistry

Client Lot #...: F0F030505 Matrix.....: SOLID
Date Sampled...: 06/02/10 11:05 Date Received..: 06/03/10

Percnt Moisture: 10

PARAMETER	PERCENT RECOVERY	RECOVERY LIMITS	METHOD	PREPARATION-ANALYSIS DATE	PREP BATCH #
Oil and Grease		Work Order #...: L2ER31DC		MS Lot-Sample #: F0F030505-001	
	46 N	(75 - 125)	CFR136A 1664A HEM	06/10-06/11/10	0160404

Dilution Factor: 1 Analysis Time..: 00:00

NOTE(S):

Calculations are performed before rounding to avoid round-off errors in calculated results.

N Spiked analyte recovery is outside stated control limits.

Results and reporting limits have been adjusted for dry weight.

SAMPLE DUPLICATE EVALUATION REPORT

General Chemistry

Client Lot #...: F0F030505 **Work Order #...:** L1PX1-SMP L1PX1-DUP **Matrix.....:** SOLID

Date Sampled...: 05/18/10 09:00 **Date Received..:** 05/19/10

% Moisture.....: 10

PARAM	RESULT	DUPLICATE RESULT	UNITS	RPD	RPD LIMIT	METHOD	PREPARATION-ANALYSIS DATE	PREP BATCH #
Percent Moisture						SD Lot-Sample #:	F0E190456-001	
	10.0	11.9	%	17	(0-30)	MCAWW 160.3 MOD	06/07-06/08/10	0156014

Dilution Factor: 1 Analysis Time..: 00:00

SAMPLE DUPLICATE EVALUATION REPORT

General Chemistry

Client Lot #...: F0F030505 **Work Order #...:** L2ER3-SMP **Matrix.....:** SOLID
L2ER3-DUP

Date Sampled...: 06/02/10 11:05 **Date Received..:** 06/03/10

% Moisture.....: 9.1

PARAM	RESULT	DUPLICATE RESULT	UNITS	RPD	RPD LIMIT	METHOD	PREPARATION-ANALYSIS DATE	PREP BATCH #
Oil and Grease						SD Lot-Sample #: F0F030505-001		
	154	136	mg/kg	13	(0-30)	CFR136A 1664A HEM	06/10-06/11/10	0160404

Dilution Factor: 1 Analysis Time..: 00:00

NOTE(S):

Calculations are performed before rounding to avoid round-off errors in calculated results.

Results and reporting limits have been adjusted for dry weight.

F0F030505 CLIENT ANALYSIS SUMMARY

Storage Loc: 3-29,ENCORE

Project Manager: IV | Quote #: 86157 | SDG:

Project: CTO3 | HPS 3670.003 NON RAD

PO#: 1036773-6 3570.01 | Report to: Sabina Sudoko

Client: 494696 Tetra Tech EC, Inc.

#SMPS in LOT: 5

Date Received: 2010-06-03
Analytical Due Date: 2010-06-14
Report Due Date: 2010-06-17
Report Type: X
EDD Code: 00

This project requires compliance with the DOD QSM. Please refer to client memorandum #4. Login separate project numbers in separate lots. Change CTO number. Put lot# on COC.
LOGIN - Please login chemistry and radiochemistry into two separate lots. Up to 20 samples per lot. NO RAD SCREEN FOR GAMMA ANALYSISIII ALL OTHERS - SCREENI
rad screen only for waters and solid Sr-90 AFTER gamma data is released. SEE BELOW FOR MORE INFO Solid gamma is always gamma-Radium
CALENDAR DAYS FOR ALL TATSIII General Comments DO NOT USE GE OIII

SAMPLE #	CLIENT SAMPLE ID	Site ID	Client Matrix	DATE/TIME SAMPLED	WORKORDER	A
1	03-PE-IR56-001			2010-06-02 / 1105	L2ER3	SOLID

SAMPLE COMMENTS:

CU	I&	SW846	6020A	SOLID, 6020, ICP-MS Metals	GK	METALS, TOTAL - 2% HCL	B3	TETRATECH HUNTERS POINT	PROT: C	WRK LOC	06		
AG	I&	SW846	6020A	SOLID, 6020, ICP-MS Metals	GK	METALS, TOTAL - 2% HCL	B3	TETRATECH HUNTERS POINT	PROT: C	WRK LOC	06		
TL	I&	SW846	6020A	SOLID, 6020, ICP-MS Metals	GK	METALS, TOTAL - 2% HCL	B3	TETRATECH HUNTERS POINT	PROT: C	WRK LOC	06		
SE	I&	SW846	6020A	SOLID, 6020, ICP-MS Metals	GK	METALS, TOTAL - 2% HCL	B3	TETRATECH HUNTERS POINT	PROT: C	WRK LOC	06		
SB	I&	SW846	6020A	SOLID, 6020, ICP-MS Metals	GK	METALS, TOTAL - 2% HCL	B3	TETRATECH HUNTERS POINT	PROT: C	WRK LOC	06		
PB	I&	SW846	6020A	SOLID, 6020, ICP-MS Metals	GK	METALS, TOTAL - 2% HCL	B3	TETRATECH HUNTERS POINT	PROT: C	WRK LOC	06		
NI	I&	SW846	6020A	SOLID, 6020, ICP-MS Metals	GK	METALS, TOTAL - 2% HCL	B3	TETRATECH HUNTERS POINT	PROT: C	WRK LOC	06		
ZN	I&	SW846	6020A	SOLID, 6020, ICP-MS Metals	GK	METALS, TOTAL - 2% HCL	B3	TETRATECH HUNTERS POINT	PROT: C	WRK LOC	06		
MO	I&	SW846	6020A	SOLID, 6020, ICP-MS Metals	GK	METALS, TOTAL - 2% HCL	B3	TETRATECH HUNTERS POINT	PROT: C	WRK LOC	06		
VX	I&	SW846	6020A	SOLID, 6020, ICP-MS Metals	GK	METALS, TOTAL - 2% HCL	B3	TETRATECH HUNTERS POINT	PROT: C	WRK LOC	06		
CR	I&	SW846	6020A	SOLID, 6020, ICP-MS Metals	GK	METALS, TOTAL - 2% HCL	B3	TETRATECH HUNTERS POINT	PROT: C	WRK LOC	06		
CO	I&	SW846	6020A	SOLID, 6020, ICP-MS Metals	GK	METALS, TOTAL - 2% HCL	B3	TETRATECH HUNTERS POINT	PROT: C	WRK LOC	06		
CD	I&	SW846	6020A	SOLID, 6020, ICP-MS Metals	GK	METALS, TOTAL - 2% HCL	B3	TETRATECH HUNTERS POINT	PROT: C	WRK LOC	06		
BE	I&	SW846	6020A	SOLID, 6020, ICP-MS Metals	GK	METALS, TOTAL - 2% HCL	B3	TETRATECH HUNTERS POINT	PROT: C	WRK LOC	06		
BA	I&	SW846	6020A	SOLID, 6020, ICP-MS Metals	GK	METALS, TOTAL - 2% HCL	B3	TETRATECH HUNTERS POINT	PROT: C	WRK LOC	06		
AS	I&	SW846	6020A	SOLID, 6020, ICP-MS Metals	GK	METALS, TOTAL - 2% HCL	B3	TETRATECH HUNTERS POINT	PROT: C	WRK LOC	06		
HG	J&	SW846	7471B	SOLID, 7471A, Hg	70	METALS, TOTAL (Method Exclusive) - Solids	B3	TETRATECH HUNTERS POINT	PROT: C	WRK LOC	06		
XX	D#	SW846	8270D	SOLID, 8270D, SVOA - no PAHs	13	SONICATION - Low Level	B3	TETRATECH HUNTERS POINT	PROT: B	WRK LOC	06	TIC: N	
XX	FX	SW846	8270C SIM	SOLID, 8270C SIM PAHs	13	SONICATION - Low Level	DQ	DOD QSM V3	PROT: B	WRK LOC	06	TIC: N	
XX	V&	SW846	8260C	SOLID, 8260C, VOA	15	PURGE AND TRAP - 5 mL purge	B3	TETRATECH HUNTERS POINT	PROT: B	WRK LOC	06	TIC: N	
XX	ZV		RAD SCREEN	SOLID, RAD SCREEN	RA	IN-HOUSE RAD SCREEN	01	STANDARD TEST SET	PROT: A	WRK LOC	06		
XX	MW	CFR13 6A	1664A HEM	SOLID, 1664A HEM, Oil & Grease	13	SONICATION - Low Level	B3	TETRATECH HUNTERS POINT	PROT: C	WRK LOC	06		
XX	WM	MCAW W	160.3 MOD	SOLID, 160.3 MOD, Percent Moisture	88	NO SAMPLE PREPARATION PERFORMED / DIRECT	01	STANDARD TEST SET	PROT: A	WRK LOC	06		

SAMPLE #	CLIENT SAMPLE ID	Site ID	Client Matrix	DATE/TIME SAMPLED	WORKORDER	A
2	03-PE-IR56-002			2010-06-02 / 1110	L2ETG	SOLID

SAMPLE COMMENTS:

MO	I&	SW846	6020A	SOLID, 6020, ICP-MS Metals	GK	METALS, TOTAL - 2% HCL	B3	TETRATECH HUNTERS POINT	PROT: C	WRK LOC	06
CD	I&	SW846	6020A	SOLID, 6020, ICP-MS Metals	GK	METALS, TOTAL - 2% HCL	B3	TETRATECH HUNTERS POINT	PROT: C	WRK LOC	06
ZN	I&	SW846	6020A	SOLID, 6020, ICP-MS Metals	GK	METALS, TOTAL - 2% HCL	B3	TETRATECH HUNTERS POINT	PROT: C	WRK LOC	06
VX	I&	SW846	6020A	SOLID, 6020, ICP-MS Metals	GK	METALS, TOTAL - 2% HCL	B3	TETRATECH HUNTERS POINT	PROT: C	WRK LOC	06
TL	I&	SW846	6020A	SOLID, 6020, ICP-MS Metals	GK	METALS, TOTAL - 2% HCL	B3	TETRATECH HUNTERS POINT	PROT: C	WRK LOC	06
SE	I&	SW846	6020A	SOLID, 6020, ICP-MS Metals	GK	METALS, TOTAL - 2% HCL	B3	TETRATECH HUNTERS POINT	PROT: C	WRK LOC	06
SB	I&	SW846	6020A	SOLID, 6020, ICP-MS Metals	GK	METALS, TOTAL - 2% HCL	B3	TETRATECH HUNTERS POINT	PROT: C	WRK LOC	06
PB	I&	SW846	6020A	SOLID, 6020, ICP-MS Metals	GK	METALS, TOTAL - 2% HCL	B3	TETRATECH HUNTERS POINT	PROT: C	WRK LOC	06

F0F030505 CLIENT ANALYSIS SUMMARY

Storage Loc: 3-29,ENCORE

Project Manager: IV Quote #: 86157 SDG:

Date Received: 2010-06-03

Project: CTO3 HPS 3670.003 NON RAD

Analytical Due Date: 2010-06-14

PO#: 1036773-6 3570.01 Report to: Sabina Sudoko

Report Due Date: 2010-06-17

Client: 494696 Tetra Tech EC, Inc.

Report Type: X

#SMPS In LOT: 5 EDD Code: 00

This project requires compliance with the DOD QSM. Please refer to client memorandum #4. Login separate project numbers in separte lots. Change CTO number. Put lot# on COC.
LOGIN - Please login chemistry and radiochemistry into two separate lots. Up to 20 samples per lot. NO RAD SCREEN FOR GAMMA ANALYSIS!!! ALL OTHERS - SCREEN!
rad screen only for waters and solid Sr-90 AFTER gamma data is released. SEE BELOW FOR MORE INFO Solid gamma is always gamma-Radium
CALENDAR DAYS FOR ALL TAT!!! General Comments DO NOT USE GE 6!!!

NI	I&	SW846	6020A	SOLID, 6020, ICP-MS Metals	GK	METALS, TOTAL - 2% HCL	B3	TETRATECH HUNTERS POINT	PROT: C	WRK LOC	06	
AS	I&	SW846	6020A	SOLID, 6020, ICP-MS Metals	GK	METALS, TOTAL - 2% HCL	B3	TETRATECH HUNTERS POINT	PROT: C	WRK LOC	06	
CU	I&	SW846	6020A	SOLID, 6020, ICP-MS Metals	GK	METALS, TOTAL - 2% HCL	B3	TETRATECH HUNTERS POINT	PROT: C	WRK LOC	06	
AG	I&	SW846	6020A	SOLID, 6020, ICP-MS Metals	GK	METALS, TOTAL - 2% HCL	B3	TETRATECH HUNTERS POINT	PROT: C	WRK LOC	06	
CO	I&	SW846	6020A	SOLID, 6020, ICP-MS Metals	GK	METALS, TOTAL - 2% HCL	B3	TETRATECH HUNTERS POINT	PROT: C	WRK LOC	06	
CR	I&	SW846	6020A	SOLID, 6020, ICP-MS Metals	GK	METALS, TOTAL - 2% HCL	B3	TETRATECH HUNTERS POINT	PROT: C	WRK LOC	06	
BE	I&	SW846	6020A	SOLID, 6020, ICP-MS Metals	GK	METALS, TOTAL - 2% HCL	B3	TETRATECH HUNTERS POINT	PROT: C	WRK LOC	06	
BA	I&	SW846	6020A	SOLID, 6020, ICP-MS Metals	GK	METALS, TOTAL - 2% HCL	B3	TETRATECH HUNTERS POINT	PROT: C	WRK LOC	06	
HG	J&	SW846	7471B	SOLID, 7471A, Hg	70	METALS, TOTAL (Method Exclusive) - Solids	B3	TETRATECH HUNTERS POINT	PROT: C	WRK LOC	06	
XX	D#	SW846	8270D	SOLID, 8270D, SVOA - no PAHs	13	SONICATION - Low Level	B3	TETRATECH HUNTERS POINT	PROT: B	WRK LOC	06	TIC: N
XX	FX	SW846	8270C SIM	SOLID, 8270C SIM PAHs	13	SONICATION - Low Level	DQ	DOD QSM V3	PROT: B	WRK LOC	06	TIC: N
XX	V&	SW846	8260C	SOLID, 8260C, VOA	15	PURGE AND TRAP - 5 mL purge	B3	TETRATECH HUNTERS POINT	PROT: B	WRK LOC	06	TIC: N
XX	ZV		RAD SCREEN	SOLID, RAD SCREEN	RA	IN-HOUSE RAD SCREEN	01	STANDARD TEST SET	PROT: A	WRK LOC	06	
XX	MW	CFR136A	1664A HEM	SOLID, 1664A HEM, Oil & Grease	13	SONICATION - Low Level	B3	TETRATECH HUNTERS POINT	PROT: C	WRK LOC	06	
XX	WM	MCAW	160.3 MOD	SOLID, 160.3 MOD, Percent Moisture	88	NO SAMPLE PREPARATION PERFORMED / DIRECT	01	STANDARD TEST SET	PROT: A	WRK LOC	06	

SAMPLE #	CLIENT SAMPLE ID	Site ID	Client Matrix	DATE/TIME SAMPLED	WORKORDER	A
3	03-PE-IR66-003			2010-06-02 / 1120	L2ETJ	SOLID

SAMPLE COMMENTS:

SB	I&	SW846	6020A	SOLID, 6020, ICP-MS Metals	GK	METALS, TOTAL - 2% HCL	B3	TETRATECH HUNTERS POINT	PROT: C	WRK LOC	06	
AG	I&	SW846	6020A	SOLID, 6020, ICP-MS Metals	GK	METALS, TOTAL - 2% HCL	B3	TETRATECH HUNTERS POINT	PROT: C	WRK LOC	06	
AS	I&	SW846	6020A	SOLID, 6020, ICP-MS Metals	GK	METALS, TOTAL - 2% HCL	B3	TETRATECH HUNTERS POINT	PROT: C	WRK LOC	06	
BA	I&	SW846	6020A	SOLID, 6020, ICP-MS Metals	GK	METALS, TOTAL - 2% HCL	B3	TETRATECH HUNTERS POINT	PROT: C	WRK LOC	06	
BE	I&	SW846	6020A	SOLID, 6020, ICP-MS Metals	GK	METALS, TOTAL - 2% HCL	B3	TETRATECH HUNTERS POINT	PROT: C	WRK LOC	06	
CD	I&	SW846	6020A	SOLID, 6020, ICP-MS Metals	GK	METALS, TOTAL - 2% HCL	B3	TETRATECH HUNTERS POINT	PROT: C	WRK LOC	06	
CO	I&	SW846	6020A	SOLID, 6020, ICP-MS Metals	GK	METALS, TOTAL - 2% HCL	B3	TETRATECH HUNTERS POINT	PROT: C	WRK LOC	06	
CR	I&	SW846	6020A	SOLID, 6020, ICP-MS Metals	GK	METALS, TOTAL - 2% HCL	B3	TETRATECH HUNTERS POINT	PROT: C	WRK LOC	06	
CU	I&	SW846	6020A	SOLID, 6020, ICP-MS Metals	GK	METALS, TOTAL - 2% HCL	B3	TETRATECH HUNTERS POINT	PROT: C	WRK LOC	06	
MO	I&	SW846	6020A	SOLID, 6020, ICP-MS Metals	GK	METALS, TOTAL - 2% HCL	B3	TETRATECH HUNTERS POINT	PROT: C	WRK LOC	06	
PB	I&	SW846	6020A	SOLID, 6020, ICP-MS Metals	GK	METALS, TOTAL - 2% HCL	B3	TETRATECH HUNTERS POINT	PROT: C	WRK LOC	06	
ZN	I&	SW846	6020A	SOLID, 6020, ICP-MS Metals	GK	METALS, TOTAL - 2% HCL	B3	TETRATECH HUNTERS POINT	PROT: C	WRK LOC	06	
SE	I&	SW846	6020A	SOLID, 6020, ICP-MS Metals	GK	METALS, TOTAL - 2% HCL	B3	TETRATECH HUNTERS POINT	PROT: C	WRK LOC	06	
TL	I&	SW846	6020A	SOLID, 6020, ICP-MS Metals	GK	METALS, TOTAL - 2% HCL	B3	TETRATECH HUNTERS POINT	PROT: C	WRK LOC	06	
VX	I&	SW846	6020A	SOLID, 6020, ICP-MS Metals	GK	METALS, TOTAL - 2% HCL	B3	TETRATECH HUNTERS POINT	PROT: C	WRK LOC	06	
NI	I&	SW846	6020A	SOLID, 6020, ICP-MS Metals	GK	METALS, TOTAL - 2% HCL	B3	TETRATECH HUNTERS POINT	PROT: C	WRK LOC	06	
HG	J&	SW846	7471B	SOLID, 7471A, Hg	70	METALS, TOTAL (Method Exclusive) - Solids	B3	TETRATECH HUNTERS POINT	PROT: C	WRK LOC	06	
XX	D#	SW846	8270D	SOLID, 8270D, SVOA - no PAHs	13	SONICATION - Low Level	B3	TETRATECH HUNTERS POINT	PROT: B	WRK LOC	06	TIC: N
XX	FX	SW846	8270C SIM	SOLID, 8270C SIM PAHs	13	SONICATION - Low Level	DQ	DOD QSM V3	PROT: B	WRK LOC	06	TIC: N

F0F030505 CLIENT ANALYSIS SUMMARY

Storage Loc: 3-29,ENCORE
Date Received: 2010-06-03
Analytical Due Date: 2010-06-14
Report Due Date: 2010-06-17

Project Manager: IV
Quote #: 86157
SDG:
Project: CTO3
HPS 3670.003 NON RAD
PO#: 1036773-6 3670.01
Report to: Sabina Sudoko
Client: 494696 Tetra Tech EC, Inc.
#SMPS in LOT: 5
Report Type: X
EDD Code: 00

This project requires compliance with the DOD QSM. Please refer to client memorandum #4. Login separate project numbers in separte lots. Change CTO number. Put lot# on COCs.
LOGIN - Please login chemistry and radiochemistry into two separate lots. Up to 20 samples per lot. NO RAD SCREEN FOR GAMMA ANALYSIS!!! ALL OTHERS - SCREEN!
rad screen only for waters and solid Sr-90 AFTER gamma data is released. SEE BELOW FOR MORE INFO Solid gamma is always gamma-Radium
CALENDAR DAYS FOR ALL TATS!!! General Comments DO NOT USE GE CIII

XX	V&	SW846	8260C	SOLID, 8260C, VOA	15	PURGE AND TRAP - 5 mL purge	B3	TETRATECH HUNTERS POINT	PROT: B	WRK LOC	06	TIC: N
XX	ZV		RAD SCREEN	SOLID, RAD SCREEN	RA	IN-HOUSE RAD SCREEN	01	STANDARD TEST SET	PROT: A	WRK LOC	06	
XX	MW	CFR13 6A	1664A HEM	SOLID, 1664A HEM, Oil & Grease	13	SONICATION - Low Level	B3	TETRATECH HUNTERS POINT	PROT: C	WRK LOC	06	
XX	WM	MCAW W	160.3 MOD	SOLID, 160.3 MOD, Percent Moisture	88	NO SAMPLE PREPARATION PERFORMED / DIRECT	01	STANDARD TEST SET	PROT: A	WRK LOC	06	

SAMPLE #	CLIENT SAMPLE ID	Site ID	Client Matrix	DATE/TIME SAMPLED	WORKORDER	A
4	03-PE-IR56-004			2010-06-02 / 1125	L2ETL	SOLID

SAMPLE COMMENTS:

BA	I&	SW846	6020A	SOLID, 6020, ICP-MS Metals	GK	METALS, TOTAL - 2% HCL	B3	TETRATECH HUNTERS POINT	PROT: C	WRK LOC	06	
MO	I&	SW846	6020A	SOLID, 6020, ICP-MS Metals	GK	METALS, TOTAL - 2% HCL	B3	TETRATECH HUNTERS POINT	PROT: C	WRK LOC	06	
ZN	I&	SW846	6020A	SOLID, 6020, ICP-MS Metals	GK	METALS, TOTAL - 2% HCL	B3	TETRATECH HUNTERS POINT	PROT: C	WRK LOC	06	
VX	I&	SW846	6020A	SOLID, 6020, ICP-MS Metals	GK	METALS, TOTAL - 2% HCL	B3	TETRATECH HUNTERS POINT	PROT: C	WRK LOC	06	
TL	I&	SW846	6020A	SOLID, 6020, ICP-MS Metals	GK	METALS, TOTAL - 2% HCL	B3	TETRATECH HUNTERS POINT	PROT: C	WRK LOC	06	
SE	I&	SW846	6020A	SOLID, 6020, ICP-MS Metals	GK	METALS, TOTAL - 2% HCL	B3	TETRATECH HUNTERS POINT	PROT: C	WRK LOC	06	
SB	I&	SW846	6020A	SOLID, 6020, ICP-MS Metals	GK	METALS, TOTAL - 2% HCL	B3	TETRATECH HUNTERS POINT	PROT: C	WRK LOC	06	
PB	I&	SW846	6020A	SOLID, 6020, ICP-MS Metals	GK	METALS, TOTAL - 2% HCL	B3	TETRATECH HUNTERS POINT	PROT: C	WRK LOC	06	
NI	I&	SW846	6020A	SOLID, 6020, ICP-MS Metals	GK	METALS, TOTAL - 2% HCL	B3	TETRATECH HUNTERS POINT	PROT: C	WRK LOC	06	
CU	I&	SW846	6020A	SOLID, 6020, ICP-MS Metals	GK	METALS, TOTAL - 2% HCL	B3	TETRATECH HUNTERS POINT	PROT: C	WRK LOC	06	
CR	I&	SW846	6020A	SOLID, 6020, ICP-MS Metals	GK	METALS, TOTAL - 2% HCL	B3	TETRATECH HUNTERS POINT	PROT: C	WRK LOC	06	
CO	I&	SW846	6020A	SOLID, 6020, ICP-MS Metals	GK	METALS, TOTAL - 2% HCL	B3	TETRATECH HUNTERS POINT	PROT: C	WRK LOC	06	
BE	I&	SW846	6020A	SOLID, 6020, ICP-MS Metals	GK	METALS, TOTAL - 2% HCL	B3	TETRATECH HUNTERS POINT	PROT: C	WRK LOC	06	
AS	I&	SW846	6020A	SOLID, 6020, ICP-MS Metals	GK	METALS, TOTAL - 2% HCL	B3	TETRATECH HUNTERS POINT	PROT: C	WRK LOC	06	
AG	I&	SW846	6020A	SOLID, 6020, ICP-MS Metals	GK	METALS, TOTAL - 2% HCL	B3	TETRATECH HUNTERS POINT	PROT: C	WRK LOC	06	
CD	I&	SW846	6020A	SOLID, 6020, ICP-MS Metals	GK	METALS, TOTAL - 2% HCL	B3	TETRATECH HUNTERS POINT	PROT: C	WRK LOC	06	
HG	J&	SW846	7471B	SOLID, 7471A, Hg	70	METALS, TOTAL (Method Exclusive) - Solids	B3	TETRATECH HUNTERS POINT	PROT: C	WRK LOC	06	
XX	D#	SW846	8270D	SOLID, 8270D, SVOA - no PAHs	13	SONICATION - Low Level	B3	TETRATECH HUNTERS POINT	PROT: B	WRK LOC	06	TIC: N
XX	FX	SW846	8270C SIM	SOLID, 8270C SIM PAHs	13	SONICATION - Low Level	DQ	DOD QSM V3	PROT: B	WRK LOC	06	TIC: N
XX	V&	SW846	8260C	SOLID, 8260C, VOA	15	PURGE AND TRAP - 5 mL purge	B3	TETRATECH HUNTERS POINT	PROT: B	WRK LOC	06	TIC: N
XX	ZV		RAD SCREEN	SOLID, RAD SCREEN	RA	IN-HOUSE RAD SCREEN	01	STANDARD TEST SET	PROT: A	WRK LOC	06	
XX	MW	CFR13 6A	1664A HEM	SOLID, 1664A HEM, Oil & Grease	13	SONICATION - Low Level	B3	TETRATECH HUNTERS POINT	PROT: C	WRK LOC	06	
XX	WM	MCAW W	160.3 MOD	SOLID, 160.3 MOD, Percent Moisture	88	NO SAMPLE PREPARATION PERFORMED / DIRECT	01	STANDARD TEST SET	PROT: A	WRK LOC	06	

SAMPLE #	CLIENT SAMPLE ID	Site ID	Client Matrix	DATE/TIME SAMPLED	WORKORDER	A
5	03-PE-IR56-005			2010-06-02 / 1130	L2ETM	SOLID

SAMPLE COMMENTS:

MO	I&	SW846	6020A	SOLID, 6020, ICP-MS Metals	GK	METALS, TOTAL - 2% HCL	B3	TETRATECH HUNTERS POINT	PROT: C	WRK LOC	06	
VX	I&	SW846	6020A	SOLID, 6020, ICP-MS Metals	GK	METALS, TOTAL - 2% HCL	B3	TETRATECH HUNTERS POINT	PROT: C	WRK LOC	06	
TL	I&	SW846	6020A	SOLID, 6020, ICP-MS Metals	GK	METALS, TOTAL - 2% HCL	B3	TETRATECH HUNTERS POINT	PROT: C	WRK LOC	06	
SE	I&	SW846	6020A	SOLID, 6020, ICP-MS Metals	GK	METALS, TOTAL - 2% HCL	B3	TETRATECH HUNTERS POINT	PROT: C	WRK LOC	06	

F0F030505 CLIENT ANALYSIS SUMMARY

Storage Loc: 3-29,ENCORE

Project Manager: IV | Quote #: 86157 | SDG:

Project: CTO3 | HPS 3670.003 NON RAD

PO#: 1036773-6 3570.01 | Report to: Sabina Sudoko

Client: 494696 Tetra Tech EC, Inc.

#SMPS In LOT: 5

Date Received: 2010-06-03
Analytical Due Date: 2010-06-14
Report Due Date: 2010-06-17
Report Type: X
EDD Code: 00

This project requires compliance with the DOD QSM. Please refer to client memorandum #4. Login separate project numbers in separate lots. Change CTO number. Put lot# on COCs.
LOGIN - Please login chemistry and radiochemistry into two separate lots. Up to 20 samples per lot. NC RAD SCREEN FOR GAMMA ANALYSISIII ALL OTHERS - SCREENI
rad screen only for waters and solid Sr-90 AFTER gamma data is released. SEE BELOW FOR MORE INFO Solid gamma is always gamma-Radium
CALENDAR DAYS FOR ALL TATSIII General Comments DO NOT USE GE III

SB	I&	SW846	6020A	SOLID, 6020, ICP-MS Metals	GK	METALS, TOTAL - 2% HCL	B3	TETRATECH HUNTERS POINT	PROT: C	WRK LOC	06	
PB	I&	SW846	6020A	SOLID, 6020, ICP-MS Metals	GK	METALS, TOTAL - 2% HCL	B3	TETRATECH HUNTERS POINT	PROT: C	WRK LOC	06	
NI	I&	SW846	6020A	SOLID, 6020, ICP-MS Metals	GK	METALS, TOTAL - 2% HCL	B3	TETRATECH HUNTERS POINT	PROT: C	WRK LOC	06	
AG	I&	SW846	6020A	SOLID, 6020, ICP-MS Metals	GK	METALS, TOTAL - 2% HCL	B3	TETRATECH HUNTERS POINT	PROT: C	WRK LOC	06	
ZN	I&	SW846	6020A	SOLID, 6020, ICP-MS Metals	GK	METALS, TOTAL - 2% HCL	B3	TETRATECH HUNTERS POINT	PROT: C	WRK LOC	06	
CU	I&	SW846	6020A	SOLID, 6020, ICP-MS Metals	GK	METALS, TOTAL - 2% HCL	B3	TETRATECH HUNTERS POINT	PROT: C	WRK LOC	06	
AS	I&	SW846	6020A	SOLID, 6020, ICP-MS Metals	GK	METALS, TOTAL - 2% HCL	B3	TETRATECH HUNTERS POINT	PROT: C	WRK LOC	06	
BA	I&	SW846	6020A	SOLID, 6020, ICP-MS Metals	GK	METALS, TOTAL - 2% HCL	B3	TETRATECH HUNTERS POINT	PROT: C	WRK LOC	06	
BE	I&	SW846	6020A	SOLID, 6020, ICP-MS Metals	GK	METALS, TOTAL - 2% HCL	B3	TETRATECH HUNTERS POINT	PROT: C	WRK LOC	06	
CD	I&	SW846	6020A	SOLID, 6020, ICP-MS Metals	GK	METALS, TOTAL - 2% HCL	B3	TETRATECH HUNTERS POINT	PROT: C	WRK LOC	06	
CO	I&	SW846	6020A	SOLID, 6020, ICP-MS Metals	GK	METALS, TOTAL - 2% HCL	B3	TETRATECH HUNTERS POINT	PROT: C	WRK LOC	06	
CR	I&	SW846	6020A	SOLID, 6020, ICP-MS Metals	GK	METALS, TOTAL - 2% HCL	B3	TETRATECH HUNTERS POINT	PROT: C	WRK LOC	06	
HG	J&	SW846	7471B	SOLID, 7471A, Hg	70	METALS, TOTAL (Method Exclusive) - Solids	B3	TETRATECH HUNTERS POINT	PROT: C	WRK LOC	06	
XX	D#	SW846	8270D	SOLID, 8270D, SVOA - no PAHs	13	SONICATION - Low Level	B3	TETRATECH HUNTERS POINT	PROT: B	WRK LOC	06	TIC: N
XX	FX	SW846	8270C SIM	SOLID, 8270C SIM PAHs	13	SONICATION - Low Level	DQ	DOD QSM V3	PROT: B	WRK LOC	06	TIC: N
XX	V&	SW846	8260C	SOLID, 8260C, VOA	15	PURGE AND TRAP - 5 mL purge	B3	TETRATECH HUNTERS POINT	PROT: B	WRK LOC	06	TIC: N
XX	ZV		RAD SCREEN	SOLID, RAD SCREEN	RA	IN-HOUSE RAD SCREEN	01	STANDARD TEST SET	PROT: A	WRK LOC	06	
XX	MW	CFR136A	1664A HEM	SOLID, 1664A HEM, Oil & Grease	13	SONICATION - Low Level	B3	TETRATECH HUNTERS POINT	PROT: C	WRK LOC	06	
XX	WM	MCAWW	160.3 MOD	SOLID, 160.3 MOD, Percent Moisture	86	NO SAMPLE PREPARATION PERFORMED / DIRECT	01	STANDARD TEST SET	PROT: A	WRK LOC	06	

TETRATECH

NUMBER 25157

CHAIN-OF-CUSTODY RECORD

PROJECT NAME	HUNTERS POINT
PROJECT LOCATION	SAN FRANCISCO, CA
SAMPLER NAME	Andrew Gorman
PROJECT CONTACT	SABINA SUDOKO
PURCHASE ORDER NO	1036773-9
PROJECT NO.	3670-003
AIRBILL NUMBER	
PROJECT CONTACT PHONE NUMBER	949-809-5022
LABORATORY NAME	TEST AMERICA
LABORATORY ID (FOR LABORATORY)	

ANALYSES REQUIRED

SAMPLE ID	DATE COLLECTED	TIME COLLECTED	NO. OF CONTAINER	LEVEL 3	LEVEL 4	TYPE	TAT	TRACE METALS	EPA 8270 (SVOC)	EPA 8270 (SVOC)	EPA 1664 (TPH)	EPA 8260B (VOC)				COMMENTS
03-PE-IR56-001	6-02-10	1105	5	X		S	10 DAY	X	X		X	X	X			
03-PE-IR56-002	6-02-10	1110	5	X		S	10 DAY	X	X		X	X	X			
03-PE-IR56-003	6-02-10	1120	5	X		S	10 DAY	X	X		X	X	X			
03-PE-IR56-004	6-02-10	1125	5	X		S	10 DAY	X	X		X	X	X			
03-PE-IR56-005	6-02-10	1130	5	X		S	10 DAY	X	X		X	X	X			

RELINQUISHED BY (Signature)	DATE 6-2-10	RECEIVED BY (Signature)	LABORATORY INSTRUCTIONS/COMMENTS
COMPANY TTEC	TIME 7:00	COMPANY FEDEX	
RELINQUISHED BY (Signature)	DATE	RECEIVED BY (Signature)	COMPOSITE DESCRIPTION
COMPANY	TIME	COMPANY TTT 6-3-10 9:33	
RELINQUISHED BY (Signature)	DATE	RECEIVED BY (Signature)	SAMPLE CONDITION UPON RECEIPT (FOR LABORATORY)
COMPANY	TIME	COMPANY	TEMPERATURE: _____ SAMPLE CONDITION: ☐ INTACT ☐ BROKEN COOLER SEAL: ☐ INTACT ☐ BROKEN

White - Laboratory; Pink - Laboratory; Canary - Project File; Manila - Data Management

LOT# F0F030505

76 of 77

TestAmerica St. Louis

ED_006787_00017608-00864

TestAmerica
THE LEADER IN ENVIRONMENTAL TESTING

Lot #(s): F0F030505

394

CONDITION UPON RECEIPT FORM

Client: Tetra Tech

Quote No: 84157

COC/RFA No: 25157

Initiated By: AB/80 Date: 6-3-10 Time: 9:30

Shipping Information

Shipper: FedEx UPS DHL Courier Client Other: _____ Multiple Packages: Y (N)

Shipping # (s):*

1.
2. FedEx PRIORITY
3. Emp# 446001 02:09 03JUN10
4. TRK# 8718 3025 3373
5.
6.
7.
8.
9.
10.

Sample Temperature (s):**

1. 6
2.
3.
4.
5.
6.
7.
8.
9.
10.

*Numbered shipping lines correspond to Numbered Sample Temp lines

**Sample must be received at 4°C ± 2°C- If not, note contents below. Temperature variance does NOT affect the following: Metals-Liquid or Rad tests- Liquid or Solids

Condition (Circle "Y" for yes, "N" for no and "N/A" for not applicable):

1.	(Y) N	Are there custody seals present on the cooler?	8.	(Y) N	Are there custody seals present on bottles?
2.	Y (N) N/A	Do custody seals on cooler appear to be tampered with?	9.	Y (N) N/A	Do custody seals on bottles appear to be tampered with?
3.	(Y) N	Were contents of cooler frisked after opening, but before unpacking?	10.	Y N (N/A)	Was sample received with proper pH[1]? (If not, make note below)
4.	(Y) N	Sample received with Chain of Custody?	11.	(Y) N	Sample received in proper containers?
5.	(Y) N N/A	Does the Chain of Custody match sample ID's on the container(s)?	12.	Y N (N/A)	Headspace in VOA or TOX liquid samples? (If Yes, note sample ID's below)
6.	Y (N)	Was sample received broken?	13.	Y N (N/A)	Was Internal COC/Workshare received?
7.	(Y) N	Is sample volume sufficient for analysis?	14.	Y N (N/A)	Was pH taken by original TestAmerica lab?

[1] For DOE-AL (Pantex, LANL, Sandia) sites, pH of ALL containers received must be verified, EXCEPT VOA, TOX and soils.

Notes: Sections 2-14 completed by 80 6/3/10 [illegible]

Corrective Action:

☐ Client Contact Name: _____ Informed by: _____

☐ Sample(s) processed "as is"

☐ Sample(s) on hold until: _____ If released, notify: _____

Project Management Review: [signature] Date: 6-7-10

THIS FORM MUST BE COMPLETED AT THE TIME THE ITEMS ARE BEING CHECKED IN. IF ANY ITEM IS COMPLETED BY SOMEONE OTHER THAN THE INITIATOR, THEN THAT PERSON IS REQUIRED TO APPLY THEIR INITIAL AND THE DATE NEXT TO THAT ITEM.

ADMIN-0004, REVISED 10/21/08 \\Slsvr01\QA\FORMS\ST-LOUIS\ADMIN\Admin004 rev11.doc

STORM/SEWER PIPE EXCAVATION
IR Site Stockpile Tracking and Disposition

Hunters Point Shipyard	Parcel UC3

Selected laboratory analyses are based on (*check all that apply*):
- ☒ IR Site # 74
- SAP Chemicals of Concern
- ☐ Construction Summary Report
- ☐ CSR Addendum

Chemical Stockpile Sampling

Unit No.	Unit Volume	COC No.	Date Sampled	Date Shipped
ES 0294	312 yd^3	25197	8/9/2010	8/9/2010
ES 0295	72 yd^3	25197	8/9/2010	8/9/2010

Analytical Results

Date Analytical Results Received: 8/20/2010	Reviewed By: Sabina Sudoko/Rick Weingarz

- ☐ Material meets industrial PRG/HPAL criteria but exceeds residential PRG criteria
- ☒ Material meets residential PRG criteria
- ☐ Material exceeds industrial PRG/HPAL criteria
- ☐ All analytical results are attached

Comments/Elevated Concentrations:

See attached E-mail and data

Final Disposition

- ☐ Industrial/Open Space Backfill
- ☒ Residential Backfill
- ☐ Contaminated

Comments/Explanation:

Approval

Project Manager/Designee (signature):	Date: 8/24/2010

TETRA TECH EC, INC.

Weingarz, Richard

From: Sudoko, Sabina
Sent: Tuesday, August 24, 2010 8:25 AM
To: Weingarz, Richard; Gorman, Andrew
Subject: Cto3 _ IR74_Chem_F0H100435_082410
Attachments: Cto3_IR74_Chem_F0H100435_081010_082410.pdf

Richard / Andrew

Attached is the chem data for the above project. The data is also in the offsite qc folder – chem folder

Cto3_IR74_chem_F0H100435_082410

The data has been reviewed against the "Project Action Limits" listed in Worksheet #15 of the Hunters Point Shipyard Final SAP Appendix A Revision 4 (October 9, 2009). All results are below action levels (for analytes that have an action level listed).

Thank You..

Sabina R. Sudoko | Chemist
Direct: 949.809.5022 | Fax: 949.809.5004
sabina.sudoko@tetratech.com

Tetra Tech EC | Sciences
17885 Von Karman Ave., Suite 500 | Irvine, CA 92614 - 6213 | www.tetratech.com

PLEASE NOTE: This message, including any attachments, may include confidential and/or inside information. Any distribution or use of this communication by anyone other than the intended recipient is strictly prohibited and may be unlawful. If you are not the intended recipient, please notify the sender by replying to this message and then delete it from your system.

Think Green - Not every email needs to be printed.

From: Weingarz, Richard
Sent: Monday, August 23, 2010 7:34 AM
To: Sudoko, Sabina
Subject: FW: F0H100435

Sabina –

Can you review this data package and verify that the results are below the project action levels.

Richard Weingarz | Senior Geologist | Project Manager
Direct: 415.216.2733 | Fax: 415.871.1995 | Cell: 425.785.9225
richard.weingarz@tetratech.com

Tetra Tech EC | Science

TestAmerica
THE LEADER IN ENVIRONMENTAL TESTING

TestAmerica Laboratories, Inc.

ANALYTICAL REPORT

PROJECT NO. CTO3

HPS 3670.003

Lot #: F0H100435

Sabina Sudoko

Tetra Tech EC, Inc.
17885 Von Karman Avenue
Suite 500
Irvine, CA 92614

TESTAMERICA LABORATORIES, INC.

Erika Starman
Project Manager

August 20, 2010

Case Narrative
LOT NUMBER: F0H100435

This report contains the analytical results for the five samples received under chain of custody by TestAmerica St. Louis on August 10, 2010. These samples are associated with your HPS 3670.003 project.

The analytical results included in this report meet all applicable quality control procedure requirements except as noted on the following page.

The test results in this report meet all NELAP requirements for parameters in which accreditations are held by TestAmerica St. Louis. Any exceptions to NELAP requirements are noted in the case narrative. **TestAmerica St. Louis' Florida certification number is E87689.** The case narrative is an integral part of this report.

This report shall not be reproduced, except in full, without the written approval of the laboratory.

RPD and RER results that are outside QC limits for non-detected analytes are statistically invalid. Non-detect results were duplicated, and the RPD/RER can be ignored.

Sample receiving issues are noted on the CUR form and written communications pertaining to these issues are included in the CoC section of the report.

All chemical analysis results are based upon sample as received, wet weight, unless noted otherwise. Ra-226 analysis by gamma spectroscopy is performed on an as-received basis unless sample containers were received cracked or broken. Analysis parameters for cracked or broken samples will be listed in the narrative.

Ra-226 results analyzed by method EPA 901.1 MOD were calculated and reported from the 46.09 percent abundant 609.31 KeV line of Bi-214.

Observations/Nonconformances

Reference the chain of custody and condition upon receipt report for any variations on receipt conditions and temperature of samples on receipt.

Semivolatile Organic Compounds by GC/MS (SW-846 8270C)

The CCV %D for 1,4-Dioxane and Benzoic acid are outside the established QC limits. These analytes were not part of the analysis request and thus this excursion does not affect the data. No further action is required. Sample results are reported.

Affected Samples:
F0H100435 (1): 03-PE-IR74-001
F0H100435 (2): 03-PE-IR74-002
F0H100435 (3): 03-PE-IR74-003
F0H100435 (4): 03-PE-IR74-004
F0H100435 (5): 03-PE-IR74-005

Volatile Petroleum Hydrocarbons (SW-846 8015 MOD)

The MS surrogate recovery is outside acceptance limits. The MS spike recoveries are within QC limits demonstrating acceptable sample extraction and instrument performance. No further action is required.

Affected Samples:
F0H100435 (1): 03-PE-IR74-001
F0H100435 (2): 03-PE-IR74-002
F0H100435 (3): 03-PE-IR74-003
F0H100435 (4): 03-PE-IR74-004
F0H100435 (5): 03-PE-IR74-005

Sample surrogate recovery is outside established QC limits. Samples were reprepared/reanalyzed within holding time. The reanalysis yielded acceptable results. The reanalysis data will be reported. No further action is required.

Affected Samples:
F0H100435 (4): 03-PE-IR74-004

The CCV surrogate recoveries for LCAL415B and LCAL426B were outside the lower QC limits indicating a potential low bias for the surrogate in the associated samples. The sample surrogate recoveries were within acceptable QC limits. No further action is required.

Affected Samples:
F0H100435 (4): 03-PE-IR74-004

There was insufficient sample volume to perform MS/MSD analysis. A LCS/LCSD were performed to demonstrate accuracy and replicate precision.

Affected Samples:
F0H100435 (4): 03-PE-IR74-004

Extractable Petroleum Hydrocarbons (DRO) (SW-846 8015 MOD)

The samples were analyzed at a dilution due to high concentrations of target analytes. The sample extracts were brown which analyzed undiluted has historically caused instrumentation problems. The reporting limit has been adjusted for the dilutions since no analysis at a lesser dilution was performed.

Affected Samples:
F0H100435 (3): 03-PE-IR74-003
F0H100435 (4): 03-PE-IR74-004
F0H100435 (5): 03-PE-IR74-005

There were no other nonconformances or observations noted with any analysis on this lot.

ED_006787_00017608-00871

METHODS SUMMARY

F0H100435

PARAMETER	ANALYTICAL METHOD	PREPARATION METHOD
Extractable Petroleum Hydrocarbons	SW846 8015 MOD	SW846 3550
Percent Moisture	MCAWW 160.3 MOD	MCAWW 160.3 MOD
Semivolatile Organic Compounds by GC/MS	SW846 8270D	SW846 3550C
Volatile Petroleum Hydrocarbons	SW846 8015 MOD	SW846 5030

References:

MCAWW "Methods for Chemical Analysis of Water and Wastes", EPA-600/4-79-020, March 1983 and subsequent revisions.

SW846 "Test Methods for Evaluating Solid Waste, Physical/Chemical Methods", Third Edition, November 1986 and its updates.

ED_006787_00017608-00872

SAMPLE SUMMARY

F0H100435

WO #	SAMPLE#	CLIENT SAMPLE ID	SAMPLED DATE	SAMP TIME
L5CQK	001	03-PE-IR74-001	08/09/10	12:10
L5CQ2	002	03-PE-IR74-002	08/09/10	12:15
L5CQ3	003	03-PE-IR74-003	08/09/10	12:18
L5CQ5	004	03-PE-IR74-004	08/09/10	12:20
L5CQ6	005	03-PE-IR74-005	08/09/10	12:25

NOTE(S):

- The analytical results of the samples listed above are presented on the following pages.
- All calculations are performed before rounding to avoid round-off errors in calculated results.
- Results noted as "ND" were not detected at or above the stated limit.
- This report must not be reproduced, except in full, without the written approval of the laboratory.
- Results for the following parameters are never reported on a dry weight basis: color, corrosivity, density, flashpoint, ignitability, layers, odor, paint filter test, pH, porosity pressure, reactivity, redox potential, specific gravity, spot tests, solids, solubility, temperature, viscosity, and weight.

Tetra Tech EC, Inc.

Client Sample ID: 03-PE-IR74-001

GC/MS Semivolatiles

Lot-Sample #...: F0H100435-001 **Work Order #...:** L5CQK1AF **Matrix.....:** SOLID
Date Sampled...: 08/09/10 12:10 **Date Received..:** 08/10/10
Prep Date.....: 08/12/10 **Analysis Date..:** 08/13/10
Prep Batch #...: 0224147 **Analysis Time..:** 16:58
Dilution Factor: 1
% Moisture.....: 1.5 **Method.....:** SW846 8270D

PARAMETER	RESULT	REPORTING LIMIT	UNITS	MDL
Pyridine	ND	670	ug/kg	68
Phenol	ND	340	ug/kg	34
bis(2-Chloroethyl)-ether	ND	340	ug/kg	34
2-Chlorophenol	ND	340	ug/kg	34
1,3-Dichlorobenzene	ND	340	ug/kg	34
1,4-Dichlorobenzene	ND	340	ug/kg	34
1,2-Dichlorobenzene	ND	340	ug/kg	34
2-Methylphenol	ND	340	ug/kg	34
3-Methylphenol & 4-Methylphenol	ND	670	ug/kg	68
bis(2-Chloroisopropyl) ether	ND	340	ug/kg	34
N-Nitrosodi-n-propyl-amine	ND	340	ug/kg	34
Hexachloroethane	ND	340	ug/kg	34
2-Nitrophenol	ND	340	ug/kg	34
2,4-Dimethylphenol	ND	340	ug/kg	34
Nitrobenzene	ND	340	ug/kg	34
bis(2-Chloroethoxy) methane	ND	340	ug/kg	34
2,4-Dichlorophenol	ND	340	ug/kg	34
1,2,4-Trichloro-benzene	ND	340	ug/kg	34
Naphthalene	ND	340	ug/kg	34
4-Chloroaniline	ND	340	ug/kg	34
Hexachlorobutadiene	ND	340	ug/kg	34
4-Chloro-3-methylphenol	ND	340	ug/kg	34
Hexachlorocyclopenta-diene	ND	1600	ug/kg	340
2,4,6-Trichloro-phenol	ND	340	ug/kg	34
2,4,5-Trichloro-phenol	ND	340	ug/kg	34
2-Chloronaphthalene	ND	340	ug/kg	34
2-Nitroaniline	ND	340	ug/kg	34
Dimethyl phthalate	ND	340	ug/kg	34
Acenaphthene	ND	340	ug/kg	34

(Continued on next page)

Tetra Tech EC, Inc.

Client Sample ID: 03-PE-IR74-001

GC/MS Semivolatiles

Lot-Sample #...: F0H100435-001 **Work Order #...:** L5CQK1AF **Matrix.....:** SOLID

PARAMETER	RESULT	REPORTING LIMIT	UNITS	MDL
Acenaphthylene	ND	340	ug/kg	34
2,6-Dinitrotoluene	ND	340	ug/kg	34
3-Nitroaniline	ND	340	ug/kg	34
2,4-Dinitrophenol	ND	1600	ug/kg	340
4-Nitrophenol	ND	1600	ug/kg	340
Dibenz(a,h)anthracene	ND	340	ug/kg	34
Dibenzofuran	ND	340	ug/kg	34
2,4-Dinitrotoluene	ND	340	ug/kg	34
Diethyl phthalate	ND	340	ug/kg	34
Fluorene	ND	340	ug/kg	34
4-Chlorophenyl phenyl ether	ND	340	ug/kg	34
4-Nitroaniline	ND	1600	ug/kg	340
4,6-Dinitro-2-methylphenol	ND	1600	ug/kg	340
N-Nitrosodiphenylamine	ND	340	ug/kg	34
Pyrene	ND	340	ug/kg	34
4-Bromophenyl phenyl ether	ND	340	ug/kg	34
Hexachlorobenzene	ND	340	ug/kg	34
Pentachlorophenol	ND	670	ug/kg	340
Phenanthrene	**36 J**	**340**	**ug/kg**	**34**
Anthracene	ND	340	ug/kg	34
Di-n-butyl phthalate	ND	340	ug/kg	34
Fluoranthene	ND	340	ug/kg	34
Butyl benzyl phthalate	ND	340	ug/kg	34
Benzo(a)anthracene	ND	340	ug/kg	34
3,3'-Dichlorobenzidine	ND	1600	ug/kg	34
Chrysene	ND	340	ug/kg	34
bis(2-Ethylhexyl) phthalate	ND	340	ug/kg	44
Di-n-octyl phthalate	ND	340	ug/kg	34
Benzo(b)fluoranthene	ND	340	ug/kg	34
Benzo(k)fluoranthene	ND	340	ug/kg	34
Benzo(a)pyrene	ND	340	ug/kg	34
Indeno(1,2,3-cd)pyrene	ND	340	ug/kg	34
Benzo(ghi)perylene	ND	340	ug/kg	34

SURROGATE	PERCENT RECOVERY	RECOVERY LIMITS
Nitrobenzene-d5	82	(35 - 100)
2-Fluorobiphenyl	82	(45 - 105)
2,4,6-Tribromophenol	96	(35 - 125)
Terphenyl-d14	80	(30 - 125)
2-Fluorophenol	69	(35 - 105)
Phenol-d5	75	(40 - 100)

(Continued on next page)

Tetra Tech EC, Inc.

Client Sample ID: 03-PE-IR74-001

GC/MS Semivolatiles

Lot-Sample #...: F0H100435-001 **Work Order #...:** L5CQK1AF **Matrix.....:** SOLID

NOTE(S):

Results and reporting limits have been adjusted for dry weight.

J Estimated result. Result is less than RL.

Tetra Tech EC, Inc.

Client Sample ID: 03-PE-IR74-002

GC/MS Semivolatiles

Lot-Sample #...: F0H100435-002 **Work Order #...:** L5CQ21AF **Matrix.....:** SOLID
Date Sampled...: 08/09/10 12:15 **Date Received..:** 08/10/10
Prep Date.....: 08/12/10 **Analysis Date..:** 08/13/10
Prep Batch #...: 0224147 **Analysis Time..:** 18:11
Dilution Factor: 1
% Moisture.....: 1.8 **Method.....:** SW846 8270D

PARAMETER	RESULT	REPORTING LIMIT	UNITS	MDL
Pyridine	ND	670	ug/kg	68
Phenol	ND	340	ug/kg	34
bis(2-Chloroethyl)-ether	ND	340	ug/kg	34
2-Chlorophenol	ND	340	ug/kg	34
1,3-Dichlorobenzene	ND	340	ug/kg	34
1,4-Dichlorobenzene	ND	340	ug/kg	34
1,2-Dichlorobenzene	ND	340	ug/kg	34
2-Methylphenol	ND	340	ug/kg	34
3-Methylphenol & 4-Methylphenol	ND	670	ug/kg	68
bis(2-Chloroisopropyl) ether	ND	340	ug/kg	34
N-Nitrosodi-n-propyl-amine	ND	340	ug/kg	34
Hexachloroethane	ND	340	ug/kg	34
2-Nitrophenol	ND	340	ug/kg	34
2,4-Dimethylphenol	ND	340	ug/kg	34
Nitrobenzene	ND	340	ug/kg	34
bis(2-Chloroethoxy) methane	ND	340	ug/kg	34
2,4-Dichlorophenol	ND	340	ug/kg	34
1,2,4-Trichloro-benzene	ND	340	ug/kg	34
Naphthalene	ND	340	ug/kg	34
4-Chloroaniline	ND	340	ug/kg	34
Hexachlorobutadiene	ND	340	ug/kg	34
4-Chloro-3-methylphenol	ND	340	ug/kg	34
Hexachlorocyclopenta-diene	ND	1600	ug/kg	340
2,4,6-Trichloro-phenol	ND	340	ug/kg	34
2,4,5-Trichloro-phenol	ND	340	ug/kg	34
2-Chloronaphthalene	ND	340	ug/kg	34
2-Nitroaniline	ND	340	ug/kg	34
Dimethyl phthalate	ND	340	ug/kg	34
Acenaphthene	ND	340	ug/kg	34

(Continued on next page)

Tetra Tech EC, Inc.

Client Sample ID: 03-PE-IR74-002

GC/MS Semivolatiles

Lot-Sample #...: F0H100435-002 **Work Order #...:** L5CQ21AF **Matrix.....:** SOLID

PARAMETER	RESULT	REPORTING LIMIT	UNITS	MDL
Acenaphthylene	ND	340	ug/kg	34
2,6-Dinitrotoluene	ND	340	ug/kg	34
3-Nitroaniline	ND	340	ug/kg	34
2,4-Dinitrophenol	ND	1600	ug/kg	340
4-Nitrophenol	ND	1600	ug/kg	340
Dibenz(a,h)anthracene	ND	340	ug/kg	34
Dibenzofuran	ND	340	ug/kg	34
2,4-Dinitrotoluene	ND	340	ug/kg	34
Diethyl phthalate	ND	340	ug/kg	34
Fluorene	ND	340	ug/kg	34
4-Chlorophenyl phenyl ether	ND	340	ug/kg	34
4-Nitroaniline	ND	1600	ug/kg	340
4,6-Dinitro-2-methylphenol	ND	1600	ug/kg	340
N-Nitrosodiphenylamine	ND	340	ug/kg	34
Pyrene	ND	340	ug/kg	34
4-Bromophenyl phenyl ether	ND	340	ug/kg	34
Hexachlorobenzene	ND	340	ug/kg	34
Pentachlorophenol	ND	670	ug/kg	340
Phenanthrene	**35 J**	**340**	**ug/kg**	**34**
Anthracene	ND	340	ug/kg	34
Di-n-butyl phthalate	ND	340	ug/kg	34
Fluoranthene	ND	340	ug/kg	34
Butyl benzyl phthalate	ND	340	ug/kg	34
Benzo(a)anthracene	ND	340	ug/kg	34
3,3'-Dichlorobenzidine	ND	1600	ug/kg	34
Chrysene	ND	340	ug/kg	34
bis(2-Ethylhexyl) phthalate	ND	340	ug/kg	44
Di-n-octyl phthalate	ND	340	ug/kg	34
Benzo(b)fluoranthene	ND	340	ug/kg	34
Benzo(k)fluoranthene	ND	340	ug/kg	34
Benzo(a)pyrene	ND	340	ug/kg	34
Indeno(1,2,3-cd)pyrene	ND	340	ug/kg	34
Benzo(ghi)perylene	ND	340	ug/kg	34

SURROGATE	PERCENT RECOVERY	RECOVERY LIMITS
Nitrobenzene-d5	83	(35 - 100)
2-Fluorobiphenyl	83	(45 - 105)
2,4,6-Tribromophenol	94	(35 - 125)
Terphenyl-d14	72	(30 - 125)
2-Fluorophenol	70	(35 - 105)
Phenol-d5	78	(40 - 100)

(Continued on next page)

Tetra Tech EC, Inc.

Client Sample ID: 03-PE-IR74-002

GC/MS Semivolatiles

Lot-Sample #...: F0H100435-002 **Work Order #...:** L5CQ21AF **Matrix.....:** SOLID

NOTE(S):

Results and reporting limits have been adjusted for dry weight.

J Estimated result. Result is less than RL.

Tetra Tech EC, Inc.

Client Sample ID: 03-PE-IR74-003

GC/MS Semivolatiles

Lot-Sample #...: F0H100435-003 **Work Order #...:** L5CQ31AF **Matrix.....:** SOLID
Date Sampled...: 08/09/10 12:18 **Date Received..:** 08/10/10
Prep Date.....: 08/12/10 **Analysis Date..:** 08/13/10
Prep Batch #...: 0224147 **Analysis Time..:** 18:35
Dilution Factor: 1
% Moisture.....: 1.8 **Method.....:** SW846 8270D

PARAMETER	RESULT	REPORTING LIMIT	UNITS	MDL
Pyridine	ND	670	ug/kg	68
Phenol	ND	340	ug/kg	34
bis(2-Chloroethyl)-ether	ND	340	ug/kg	34
2-Chlorophenol	ND	340	ug/kg	34
1,3-Dichlorobenzene	ND	340	ug/kg	34
1,4-Dichlorobenzene	ND	340	ug/kg	34
1,2-Dichlorobenzene	ND	340	ug/kg	34
2-Methylphenol	ND	340	ug/kg	34
3-Methylphenol & 4-Methylphenol	ND	670	ug/kg	68
bis(2-Chloroisopropyl) ether	ND	340	ug/kg	34
N-Nitrosodi-n-propyl-amine	ND	340	ug/kg	34
Hexachloroethane	ND	340	ug/kg	34
2-Nitrophenol	ND	340	ug/kg	34
2,4-Dimethylphenol	ND	340	ug/kg	34
Nitrobenzene	ND	340	ug/kg	34
bis(2-Chloroethoxy) methane	ND	340	ug/kg	34
2,4-Dichlorophenol	ND	340	ug/kg	34
1,2,4-Trichloro-benzene	ND	340	ug/kg	34
Naphthalene	ND	340	ug/kg	34
4-Chloroaniline	ND	340	ug/kg	34
Hexachlorobutadiene	ND	340	ug/kg	34
4-Chloro-3-methylphenol	ND	340	ug/kg	34
Hexachlorocyclopenta-diene	ND	1600	ug/kg	340
2,4,6-Trichloro-phenol	ND	340	ug/kg	34
2,4,5-Trichloro-phenol	ND	340	ug/kg	34
2-Chloronaphthalene	ND	340	ug/kg	34
2-Nitroaniline	ND	340	ug/kg	34
Dimethyl phthalate	ND	340	ug/kg	34
Acenaphthene	ND	340	ug/kg	34

(Continued on next page)

Tetra Tech EC, Inc.

Client Sample ID: 03-PE-IR74-003

GC/MS Semivolatiles

Lot-Sample #...: F0H100435-003 **Work Order #...:** L5CQ31AF **Matrix.....:** SOLID

PARAMETER	RESULT	REPORTING LIMIT	UNITS	MDL
Acenaphthylene	ND	340	ug/kg	34
2,6-Dinitrotoluene	ND	340	ug/kg	34
3-Nitroaniline	ND	340	ug/kg	34
2,4-Dinitrophenol	ND	1600	ug/kg	340
4-Nitrophenol	ND	1600	ug/kg	340
Dibenz(a,h)anthracene	ND	340	ug/kg	34
Dibenzofuran	ND	340	ug/kg	34
2,4-Dinitrotoluene	ND	340	ug/kg	34
Diethyl phthalate	ND	340	ug/kg	34
Fluorene	ND	340	ug/kg	34
4-Chlorophenyl phenyl ether	ND	340	ug/kg	34
4-Nitroaniline	ND	1600	ug/kg	340
4,6-Dinitro-2-methylphenol	ND	1600	ug/kg	340
N-Nitrosodiphenylamine	ND	340	ug/kg	34
Pyrene	**44 J**	**340**	**ug/kg**	**34**
4-Bromophenyl phenyl ether	ND	340	ug/kg	34
Hexachlorobenzene	ND	340	ug/kg	34
Pentachlorophenol	ND	670	ug/kg	340
Phenanthrene	ND	340	ug/kg	34
Anthracene	ND	340	ug/kg	34
Di-n-butyl phthalate	ND	340	ug/kg	34
Fluoranthene	**43 J**	**340**	**ug/kg**	**34**
Butyl benzyl phthalate	ND	340	ug/kg	34
Benzo(a)anthracene	ND	340	ug/kg	34
3,3'-Dichlorobenzidine	ND	1600	ug/kg	34
Chrysene	**43 J**	**340**	**ug/kg**	**34**
bis(2-Ethylhexyl) phthalate	**46 J**	**340**	**ug/kg**	**44**
Di-n-octyl phthalate	ND	340	ug/kg	34
Benzo(b)fluoranthene	**35 J**	**340**	**ug/kg**	**34**
Benzo(k)fluoranthene	ND	340	ug/kg	34
Benzo(a)pyrene	**36 J**	**340**	**ug/kg**	**34**
Indeno(1,2,3-cd)pyrene	ND	340	ug/kg	34
Benzo(ghi)perylene	ND	340	ug/kg	34

SURROGATE	PERCENT RECOVERY	RECOVERY LIMITS
Nitrobenzene-d5	79	(35 - 100)
2-Fluorobiphenyl	81	(45 - 105)
2,4,6-Tribromophenol	59	(35 - 125)
Terphenyl-d14	71	(30 - 125)
2-Fluorophenol	67	(35 - 105)
Phenol-d5	75	(40 - 100)

(Continued on next page)

Tetra Tech EC, Inc.

Client Sample ID: 03-PE-IR74-003

GC/MS Semivolatiles

Lot-Sample #...: F0H100435-003 **Work Order #...:** L5CQ31AF **Matrix.....:** SOLID

NOTE(S):

Results and reporting limits have been adjusted for dry weight.

J Estimated result. Result is less than RL.

Tetra Tech EC, Inc.

Client Sample ID: 03-PE-IR74-004

GC/MS Semivolatiles

Lot-Sample #...: F0H100435-004 **Work Order #...:** L5CQ51AF **Matrix.....:** SOLID
Date Sampled...: 08/09/10 12:20 **Date Received..:** 08/10/10
Prep Date.....: 08/12/10 **Analysis Date..:** 08/13/10
Prep Batch #...: 0224147 **Analysis Time..:** 18:59
Dilution Factor: 1
% Moisture.....: 4.2 **Method.....:** SW846 8270D

PARAMETER	RESULT	REPORTING LIMIT	UNITS	MDL
Pyridine	ND	690	ug/kg	70
Phenol	ND	340	ug/kg	35
bis(2-Chloroethyl)-ether	ND	340	ug/kg	35
2-Chlorophenol	ND	340	ug/kg	35
1,3-Dichlorobenzene	ND	340	ug/kg	35
1,4-Dichlorobenzene	ND	340	ug/kg	35
1,2-Dichlorobenzene	ND	340	ug/kg	35
2-Methylphenol	ND	340	ug/kg	35
3-Methylphenol & 4-Methylphenol	ND	690	ug/kg	70
bis(2-Chloroisopropyl) ether	ND	340	ug/kg	35
N-Nitrosodi-n-propyl-amine	ND	340	ug/kg	35
Hexachloroethane	ND	340	ug/kg	35
2-Nitrophenol	ND	340	ug/kg	35
2,4-Dimethylphenol	ND	340	ug/kg	35
Nitrobenzene	ND	340	ug/kg	35
bis(2-Chloroethoxy) methane	ND	340	ug/kg	35
2,4-Dichlorophenol	ND	340	ug/kg	35
1,2,4-Trichloro-benzene	ND	340	ug/kg	35
Naphthalene	ND	340	ug/kg	35
4-Chloroaniline	ND	340	ug/kg	35
Hexachlorobutadiene	ND	340	ug/kg	35
4-Chloro-3-methylphenol	ND	340	ug/kg	35
Hexachlorocyclopenta-diene	ND	1700	ug/kg	340
2,4,6-Trichloro-phenol	ND	340	ug/kg	35
2,4,5-Trichloro-phenol	ND	340	ug/kg	35
2-Chloronaphthalene	ND	340	ug/kg	35
2-Nitroaniline	ND	340	ug/kg	35
Dimethyl phthalate	ND	340	ug/kg	35
Acenaphthene	ND	340	ug/kg	35

(Continued on next page)

Tetra Tech EC, Inc.

Client Sample ID: 03-PE-IR74-004

GC/MS Semivolatiles

Lot-Sample #...: F0H100435-004 **Work Order #...:** L5CQ51AF **Matrix.....:** SOLID

PARAMETER	RESULT	REPORTING LIMIT	UNITS	MDL
Acenaphthylene	ND	340	ug/kg	35
2,6-Dinitrotoluene	ND	340	ug/kg	35
3-Nitroaniline	ND	340	ug/kg	35
2,4-Dinitrophenol	ND	1700	ug/kg	340
4-Nitrophenol	ND	1700	ug/kg	340
Dibenz(a,h)anthracene	ND	340	ug/kg	35
Dibenzofuran	ND	340	ug/kg	35
2,4-Dinitrotoluene	ND	340	ug/kg	35
Diethyl phthalate	ND	340	ug/kg	35
Fluorene	ND	340	ug/kg	35
4-Chlorophenyl phenyl ether	ND	340	ug/kg	35
4-Nitroaniline	ND	1700	ug/kg	340
4,6-Dinitro-2-methylphenol	ND	1700	ug/kg	340
N-Nitrosodiphenylamine	ND	340	ug/kg	35
Pyrene	ND	340	ug/kg	35
4-Bromophenyl phenyl ether	ND	340	ug/kg	35
Hexachlorobenzene	ND	340	ug/kg	35
Pentachlorophenol	ND	690	ug/kg	340
Phenanthrene	ND	340	ug/kg	35
Anthracene	ND	340	ug/kg	35
Di-n-butyl phthalate	ND	340	ug/kg	35
Fluoranthene	ND	340	ug/kg	35
Butyl benzyl phthalate	ND	340	ug/kg	35
Benzo(a)anthracene	ND	340	ug/kg	35
3,3'-Dichlorobenzidine	ND	1700	ug/kg	35
Chrysene	ND	340	ug/kg	35
bis(2-Ethylhexyl) phthalate	ND	340	ug/kg	45
Di-n-octyl phthalate	ND	340	ug/kg	35
Benzo(b)fluoranthene	ND	340	ug/kg	35
Benzo(k)fluoranthene	ND	340	ug/kg	35
Benzo(a)pyrene	ND	340	ug/kg	35
Indeno(1,2,3-cd)pyrene	ND	340	ug/kg	35
Benzo(ghi)perylene	ND	340	ug/kg	35

SURROGATE	PERCENT RECOVERY	RECOVERY LIMITS
Nitrobenzene-d5	82	(35 - 100)
2-Fluorobiphenyl	79	(45 - 105)
2,4,6-Tribromophenol	92	(35 - 125)
Terphenyl-d14	70	(30 - 125)
2-Fluorophenol	69	(35 - 105)
Phenol-d5	77	(40 - 100)

(Continued on next page)

Tetra Tech EC, Inc.

Client Sample ID: 03-PE-IR74-004

GC/MS Semivolatiles

Lot-Sample #...: F0H100435-004 **Work Order #...:** L5CQ51AF **Matrix.....:** SOLID

NOTE(S):

Results and reporting limits have been adjusted for dry weight.

Tetra Tech EC, Inc.

Client Sample ID: 03-PE-IR74-005

GC/MS Semivolatiles

Lot-Sample #...: F0H100435-005 **Work Order #...:** L5CQ61AF **Matrix.....:** SOLID
Date Sampled...: 08/09/10 12:25 **Date Received..:** 08/10/10
Prep Date.....: 08/12/10 **Analysis Date..:** 08/13/10
Prep Batch #...: 0224147 **Analysis Time..:** 19:24
Dilution Factor: 1
% Moisture.....: 0.99 **Method.....:** SW846 8270D

PARAMETER	RESULT	REPORTING LIMIT	UNITS	MDL
Pyridine	ND	670	ug/kg	67
Phenol	ND	330	ug/kg	34
bis(2-Chloroethyl)-ether	ND	330	ug/kg	34
2-Chlorophenol	ND	330	ug/kg	34
1,3-Dichlorobenzene	ND	330	ug/kg	34
1,4-Dichlorobenzene	ND	330	ug/kg	34
1,2-Dichlorobenzene	ND	330	ug/kg	34
2-Methylphenol	ND	330	ug/kg	34
3-Methylphenol & 4-Methylphenol	ND	670	ug/kg	67
bis(2-Chloroisopropyl) ether	ND	330	ug/kg	34
N-Nitrosodi-n-propyl-amine	ND	330	ug/kg	34
Hexachloroethane	ND	330	ug/kg	34
2-Nitrophenol	ND	330	ug/kg	34
2,4-Dimethylphenol	ND	330	ug/kg	34
Nitrobenzene	ND	330	ug/kg	34
bis(2-Chloroethoxy) methane	ND	330	ug/kg	34
2,4-Dichlorophenol	ND	330	ug/kg	34
1,2,4-Trichloro-benzene	ND	330	ug/kg	34
Naphthalene	ND	330	ug/kg	34
4-Chloroaniline	ND	330	ug/kg	34
Hexachlorobutadiene	ND	330	ug/kg	34
4-Chloro-3-methylphenol	ND	330	ug/kg	34
Hexachlorocyclopenta-diene	ND	1600	ug/kg	330
2,4,6-Trichloro-phenol	ND	330	ug/kg	34
2,4,5-Trichloro-phenol	ND	330	ug/kg	34
2-Chloronaphthalene	ND	330	ug/kg	34
2-Nitroaniline	ND	330	ug/kg	34
Dimethyl phthalate	ND	330	ug/kg	34
Acenaphthene	ND	330	ug/kg	34

(Continued on next page)

Tetra Tech EC, Inc.

Client Sample ID: 03-PE-IR74-005

GC/MS Semivolatiles

Lot-Sample #...: F0H100435-005 **Work Order #...:** L5CQ61AF **Matrix.....:** SOLID

PARAMETER	RESULT	REPORTING LIMIT	UNITS	MDL
Acenaphthylene	ND	330	ug/kg	34
2,6-Dinitrotoluene	ND	330	ug/kg	34
3-Nitroaniline	ND	330	ug/kg	34
2,4-Dinitrophenol	ND	1600	ug/kg	330
4-Nitrophenol	ND	1600	ug/kg	330
Dibenz(a,h)anthracene	ND	330	ug/kg	34
Dibenzofuran	ND	330	ug/kg	34
2,4-Dinitrotoluene	ND	330	ug/kg	34
Diethyl phthalate	ND	330	ug/kg	34
Fluorene	ND	330	ug/kg	34
4-Chlorophenyl phenyl ether	ND	330	ug/kg	34
4-Nitroaniline	ND	1600	ug/kg	330
4,6-Dinitro-2-methylphenol	ND	1600	ug/kg	330
N-Nitrosodiphenylamine	ND	330	ug/kg	34
Pyrene	ND	330	ug/kg	34
4-Bromophenyl phenyl ether	ND	330	ug/kg	34
Hexachlorobenzene	ND	330	ug/kg	34
Pentachlorophenol	ND	670	ug/kg	330
Phenanthrene	**35 J**	**330**	**ug/kg**	**34**
Anthracene	ND	330	ug/kg	34
Di-n-butyl phthalate	ND	330	ug/kg	34
Fluoranthene	**35 J**	**330**	**ug/kg**	**34**
Butyl benzyl phthalate	ND	330	ug/kg	34
Benzo(a)anthracene	ND	330	ug/kg	34
3,3'-Dichlorobenzidine	ND	1600	ug/kg	34
Chrysene	ND	330	ug/kg	34
bis(2-Ethylhexyl) phthalate	ND	330	ug/kg	44
Di-n-octyl phthalate	ND	330	ug/kg	34
Benzo(b)fluoranthene	ND	330	ug/kg	34
Benzo(k)fluoranthene	ND	330	ug/kg	34
Benzo(a)pyrene	ND	330	ug/kg	34
Indeno(1,2,3-cd)pyrene	ND	330	ug/kg	34
Benzo(ghi)perylene	ND	330	ug/kg	34

SURROGATE	PERCENT RECOVERY	RECOVERY LIMITS
Nitrobenzene-d5	69	(35 - 100)
2-Fluorobiphenyl	73	(45 - 105)
2,4,6-Tribromophenol	87	(35 - 125)
Terphenyl-d14	66	(30 - 125)
2-Fluorophenol	60	(35 - 105)
Phenol-d5	68	(40 - 100)

(Continued on next page)

Tetra Tech EC, Inc.

Client Sample ID: 03-PE-IR74-005

GC/MS Semivolatiles

Lot-Sample #...: F0H100435-005 **Work Order #...:** L5CQ61AF **Matrix.....:** SOLID

NOTE(S):

Results and reporting limits have been adjusted for dry weight.

J Estimated result. Result is less than RL.

METHOD BLANK REPORT

GC/MS Semivolatiles

Client Lot #...: F0H100435 **Work Order #...:** L5GWA1AA **Matrix.....:** SOLID
MB Lot-Sample #: F0H120000-147
Prep Date.....: 08/12/10 **Analysis Time..:** 13:58
Analysis Date..: 08/13/10 **Prep Batch #...:** 0224147
Dilution Factor: 1

PARAMETER	RESULT	REPORTING LIMIT	UNITS	METHOD
Pyridine	ND	660	ug/kg	SW846 8270D
Phenol	ND	330	ug/kg	SW846 8270D
bis(2-Chloroethyl)-ether	ND	330	ug/kg	SW846 8270D
2-Chlorophenol	ND	330	ug/kg	SW846 8270D
1,3-Dichlorobenzene	ND	330	ug/kg	SW846 8270D
1,4-Dichlorobenzene	ND	330	ug/kg	SW846 8270D
1,2-Dichlorobenzene	ND	330	ug/kg	SW846 8270D
2-Methylphenol	ND	330	ug/kg	SW846 8270D
3-Methylphenol & 4-Methylphenol	ND	660	ug/kg	SW846 8270D
bis(2-Chloroisopropyl) ether	ND	330	ug/kg	SW846 8270D
N-Nitrosodi-n-propyl-amine	ND	330	ug/kg	SW846 8270D
Hexachloroethane	ND	330	ug/kg	SW846 8270D
2-Nitrophenol	ND	330	ug/kg	SW846 8270D
2,4-Dimethylphenol	ND	330	ug/kg	SW846 8270D
Nitrobenzene	ND	330	ug/kg	SW846 8270D
bis(2-Chloroethoxy) methane	ND	330	ug/kg	SW846 8270D
2,4-Dichlorophenol	ND	330	ug/kg	SW846 8270D
1,2,4-Trichloro-benzene	ND	330	ug/kg	SW846 8270D
Naphthalene	ND	330	ug/kg	SW846 8270D
4-Chloroaniline	ND	330	ug/kg	SW846 8270D
Hexachlorobutadiene	ND	330	ug/kg	SW846 8270D
4-Chloro-3-methylphenol	ND	330	ug/kg	SW846 8270D
Hexachlorocyclopenta-diene	ND	1600	ug/kg	SW846 8270D
2,4,6-Trichloro-phenol	ND	330	ug/kg	SW846 8270D
2,4,5-Trichloro-phenol	ND	330	ug/kg	SW846 8270D
2-Chloronaphthalene	ND	330	ug/kg	SW846 8270D
2-Nitroaniline	ND	330	ug/kg	SW846 8270D
Dimethyl phthalate	ND	330	ug/kg	SW846 8270D
Acenaphthene	ND	330	ug/kg	SW846 8270D
Acenaphthylene	ND	330	ug/kg	SW846 8270D
2,6-Dinitrotoluene	ND	330	ug/kg	SW846 8270D
3-Nitroaniline	ND	330	ug/kg	SW846 8270D

(Continued on next page)

METHOD BLANK REPORT

GC/MS Semivolatiles

Client Lot #...: F0H100435 **Work Order #...:** L5GWA1AA **Matrix.....:** SOLID

PARAMETER	RESULT	REPORTING LIMIT	UNITS	METHOD
2,4-Dinitrophenol	ND	1600	ug/kg	SW846 8270D
4-Nitrophenol	ND	1600	ug/kg	SW846 8270D
Dibenz(a,h)anthracene	ND	330	ug/kg	SW846 8270D
Dibenzofuran	ND	330	ug/kg	SW846 8270D
2,4-Dinitrotoluene	ND	330	ug/kg	SW846 8270D
Diethyl phthalate	ND	330	ug/kg	SW846 8270D
Fluorene	ND	330	ug/kg	SW846 8270D
4-Chlorophenyl phenyl ether	ND	330	ug/kg	SW846 8270D
4-Nitroaniline	ND	1600	ug/kg	SW846 8270D
4,6-Dinitro-2-methylphenol	ND	1600	ug/kg	SW846 8270D
N-Nitrosodiphenylamine	ND	330	ug/kg	SW846 8270D
Pyrene	ND	330	ug/kg	SW846 8270D
4-Bromophenyl phenyl ether	ND	330	ug/kg	SW846 8270D
Hexachlorobenzene	ND	330	ug/kg	SW846 8270D
Pentachlorophenol	ND	660	ug/kg	SW846 8270D
Phenanthrene	ND	330	ug/kg	SW846 8270D
Anthracene	ND	330	ug/kg	SW846 8270D
Di-n-butyl phthalate	ND	330	ug/kg	SW846 8270D
Fluoranthene	ND	330	ug/kg	SW846 8270D
Butyl benzyl phthalate	ND	330	ug/kg	SW846 8270D
Benzo(a)anthracene	ND	330	ug/kg	SW846 8270D
3,3'-Dichlorobenzidine	ND	1600	ug/kg	SW846 8270D
Chrysene	ND	330	ug/kg	SW846 8270D
bis(2-Ethylhexyl) phthalate	ND	330	ug/kg	SW846 8270D
Di-n-octyl phthalate	ND	330	ug/kg	SW846 8270D
Benzo(b)fluoranthene	ND	330	ug/kg	SW846 8270D
Benzo(k)fluoranthene	ND	330	ug/kg	SW846 8270D
Benzo(a)pyrene	ND	330	ug/kg	SW846 8270D
Indeno(1,2,3-cd)pyrene	ND	330	ug/kg	SW846 8270D
Benzo(ghi)perylene	ND	330	ug/kg	SW846 8270D

SURROGATE	PERCENT RECOVERY	RECOVERY LIMITS
Nitrobenzene-d5	88	(35 - 100)
2-Fluorobiphenyl	82	(45 - 105)
2,4,6-Tribromophenol	97	(35 - 125)
Terphenyl-d14	84	(30 - 125)
2-Fluorophenol	77	(35 - 105)
Phenol-d5	82	(40 - 100)

NOTE(S):

Calculations are performed before rounding to avoid round-off errors in calculated results.

LABORATORY CONTROL SAMPLE EVALUATION REPORT

GC/MS Semivolatiles

Client Lot #...: F0H100435 **Work Order #...:** L5GWA1AC **Matrix.....:** SOLID
LCS Lot-Sample#: F0H120000-147
Prep Date.....: 08/12/10 **Analysis Date..:** 08/13/10
Prep Batch #...: 0224147 **Analysis Time..:** 14:23
Dilution Factor: 1

PARAMETER	PERCENT RECOVERY	RECOVERY LIMITS	METHOD
Phenol	**70**	**(40 - 100)**	**SW846 8270D**
2-Chlorophenol	**70**	**(45 - 105)**	**SW846 8270D**
1,4-Dichlorobenzene	**65**	**(35 - 105)**	**SW846 8270D**
N-Nitrosodi-n-propyl-amine	**85**	**(40 - 115)**	**SW846 8270D**
1,2,4-Trichloro-benzene	**76**	**(45 - 110)**	**SW846 8270D**
4-Chloro-3-methylphenol	**79**	**(45 - 115)**	**SW846 8270D**
Acenaphthene	**82**	**(45 - 110)**	**SW846 8270D**
4-Nitrophenol	**89**	**(15 - 140)**	**SW846 8270D**
2,4-Dinitrotoluene	**84**	**(50 - 115)**	**SW846 8270D**
Pyrene	**88**	**(45 - 125)**	**SW846 8270D**
Pentachlorophenol	**62**	**(25 - 120)**	**SW846 8270D**

SURROGATE	PERCENT RECOVERY	RECOVERY LIMITS
Nitrobenzene-d5	80	(35 - 100)
2-Fluorobiphenyl	86	(45 - 105)
2,4,6-Tribromophenol	96	(35 - 125)
Terphenyl-d14	75	(30 - 125)
2-Fluorophenol	65	(35 - 105)
Phenol-d5	75	(40 - 100)

NOTE(S):

Calculations are performed before rounding to avoid round-off errors in calculated results.

Bold print denotes control parameters

MATRIX SPIKE SAMPLE EVALUATION REPORT

GC/MS Semivolatiles

Client Lot #...: F0H100435 **Work Order #...:** L5CQK1AG-MS **Matrix.....:** SOLID
MS Lot-Sample #: F0H100435-001 L5CQK1AH-MSD
Date Sampled...: 08/09/10 12:10 **Date Received..:** 08/10/10
Prep Date.....: 08/12/10 **Analysis Date..:** 08/13/10
Prep Batch #...: 0224147 **Analysis Time..:** 17:22
Dilution Factor: 1 **% Moisture.....:** 1.5

PARAMETER	PERCENT RECOVERY	RECOVERY LIMITS	RPD	RPD LIMITS	METHOD
Phenol	**72**	**(40 - 100)**			**SW846 8270D**
	70	**(40 - 100)**	**3.4**	**(0-30)**	**SW846 8270D**
2-Chlorophenol	**71**	**(45 - 105)**			**SW846 8270D**
	68	**(45 - 105)**	**4.5**	**(0-30)**	**SW846 8270D**
1,4-Dichlorobenzene	**67**	**(35 - 105)**			**SW846 8270D**
	62	**(35 - 105)**	**7.8**	**(0-30)**	**SW846 8270D**
N-Nitrosodi-n-propyl-amine	**88**	**(40 - 115)**			**SW846 8270D**
	85	**(40 - 115)**	**2.9**	**(0-30)**	**SW846 8270D**
1,2,4-Trichloro-benzene	**76**	**(45 - 110)**			**SW846 8270D**
	72	**(45 - 110)**	**4.9**	**(0-30)**	**SW846 8270D**
4-Chloro-3-methylphenol	**84**	**(45 - 115)**			**SW846 8270D**
	81	**(45 - 115)**	**3.7**	**(0-30)**	**SW846 8270D**
Acenaphthene	**85**	**(45 - 110)**			**SW846 8270D**
	80	**(45 - 110)**	**4.9**	**(0-30)**	**SW846 8270D**
4-Nitrophenol	**93**	**(15 - 140)**			**SW846 8270D**
	92	**(15 - 140)**	**0.97**	**(0-30)**	**SW846 8270D**
2,4-Dinitrotoluene	**88**	**(50 - 115)**			**SW846 8270D**
	84	**(50 - 115)**	**4.6**	**(0-30)**	**SW846 8270D**
Pyrene	**86**	**(45 - 125)**			**SW846 8270D**
	80	**(45 - 125)**	**6.7**	**(0-30)**	**SW846 8270D**
Pentachlorophenol	**40**	**(25 - 120)**			**SW846 8270D**
	37	**(25 - 120)**	**8.1**	**(0-30)**	**SW846 8270D**

SURROGATE	PERCENT RECOVERY	RECOVERY LIMITS
Nitrobenzene-d5	82	(35 - 100)
	82	(35 - 100)
2-Fluorobiphenyl	90	(45 - 105)
	87	(45 - 105)
2,4,6-Tribromophenol	97	(35 - 125)
	96	(35 - 125)
Terphenyl-d14	74	(30 - 125)
	71	(30 - 125)
2-Fluorophenol	67	(35 - 105)
	68	(35 - 105)

(Continued on next page)

MATRIX SPIKE SAMPLE EVALUATION REPORT

GC/MS Semivolatiles

Client Lot #...: F0H100435 **Work Order #...:** L5CQK1AG-MS **Matrix.....:** SOLID
MS Lot-Sample #: F0H100435-001 L5CQK1AH-MSD

SURROGATE	PERCENT RECOVERY	RECOVERY LIMITS
Phenol-d5	79	(40 - 100)
	78	(40 - 100)

NOTE(S):

Calculations are performed before rounding to avoid round-off errors in calculated results.

Bold print denotes control parameters

Results and reporting limits have been adjusted for dry weight.

Tetra Tech EC, Inc.

Client Sample ID: 03-PE-IR74-001

GC Volatiles

Lot-Sample #...: F0H100435-001 **Work Order #...:** L5CQK1AD **Matrix.....:** SOLID
Date Sampled...: 08/09/10 12:10 **Date Received..:** 08/10/10
Prep Date.....: 08/17/10 **Analysis Date..:** 08/17/10
Prep Batch #...: 0230178 **Analysis Time..:** 18:44
Dilution Factor: 1
% Moisture.....: 1.5 **Method.....:** SW846 8015 MOD

PARAMETER	RESULT	REPORTING LIMIT	UNITS	MDL
Gasoline Range Organics	ND	0.10	mg/kg	0.010

SURROGATE	PERCENT RECOVERY	RECOVERY LIMITS
Trifluorotoluene	88	(78 - 141)

NOTE(S):

Results and reporting limits have been adjusted for dry weight.

Tetra Tech EC, Inc.

Client Sample ID: 03-PE-IR74-002

GC Volatiles

Lot-Sample #...: F0H100435-002 **Work Order #...:** L5CQ21AD **Matrix.....:** SOLID
Date Sampled...: 08/09/10 12:15 **Date Received..:** 08/10/10
Prep Date.....: 08/17/10 **Analysis Date..:** 08/17/10
Prep Batch #...: 0230178 **Analysis Time..:** 20:26
Dilution Factor: 1
% Moisture.....: 1.8 **Method.....:** SW846 8015 MOD

PARAMETER	RESULT	REPORTING LIMIT	UNITS	MDL
Gasoline Range Organics	ND	0.10	mg/kg	0.010

SURROGATE	PERCENT RECOVERY	RECOVERY LIMITS
Trifluorotoluene	90	(78 - 141)

NOTE(S):

Results and reporting limits have been adjusted for dry weight.

Tetra Tech EC, Inc.

Client Sample ID: 03-PE-IR74-003

GC Volatiles

Lot-Sample #...: F0H100435-003 **Work Order #...:** L5CQ31AD **Matrix.....:** SOLID
Date Sampled...: 08/09/10 12:18 **Date Received..:** 08/10/10
Prep Date.....: 08/17/10 **Analysis Date..:** 08/17/10
Prep Batch #...: 0230178 **Analysis Time..:** 21:01
Dilution Factor: 1
% Moisture.....: 1.8 **Method.....:** SW846 8015 MOD

PARAMETER	RESULT	REPORTING LIMIT	UNITS	MDL
Gasoline Range Organics	ND	0.10	mg/kg	0.010

SURROGATE	PERCENT RECOVERY	RECOVERY LIMITS
Trifluorotoluene	87	(78 - 141)

NOTE(S):

Results and reporting limits have been adjusted for dry weight.

Tetra Tech EC, Inc.

Client Sample ID: 03-PE-IR74-004

GC Volatiles

Lot-Sample #...: F0H100435-004 **Work Order #...:** L5CQ52AD **Matrix.....:** SOLID
Date Sampled...: 08/09/10 12:20 **Date Received..:** 08/10/10
Prep Date.....: 08/18/10 **Analysis Date..:** 08/18/10
Prep Batch #...: 0230277 **Analysis Time..:** 23:13
Dilution Factor: 1
% Moisture.....: 4.2 **Method.....:** SW846 8015 MOD

PARAMETER	RESULT	REPORTING LIMIT	UNITS	MDL
Gasoline Range Organics	ND	0.10	mg/kg	0.010

SURROGATE	PERCENT RECOVERY	RECOVERY LIMITS
Trifluorotoluene	88	(78 - 141)

NOTE(S):

Results and reporting limits have been adjusted for dry weight.

Tetra Tech EC, Inc.

Client Sample ID: 03-PE-IR74-005

GC Volatiles

Lot-Sample #...: F0H100435-005 **Work Order #...:** L5CQ61AD **Matrix.....:** SOLID
Date Sampled...: 08/09/10 12:25 **Date Received..:** 08/10/10
Prep Date.....: 08/17/10 **Analysis Date..:** 08/17/10
Prep Batch #...: 0230178 **Analysis Time..:** 22:10
Dilution Factor: 1
% Moisture.....: 0.99 **Method.....:** SW846 8015 MOD

PARAMETER	RESULT	REPORTING LIMIT	UNITS	MDL
Gasoline Range Organics	ND	0.10	mg/kg	0.010

SURROGATE	PERCENT RECOVERY	RECOVERY LIMITS
Trifluorotoluene	88	(78 - 141)

NOTE(S):

Results and reporting limits have been adjusted for dry weight.

METHOD BLANK REPORT

GC Volatiles

Client Lot #...: F0H100435 **Work Order #...:** L5QGC1AA **Matrix.....:** SOLID
MB Lot-Sample #: F0H180000-178
Prep Date.....: 08/17/10 **Analysis Time..:** 14:08
Analysis Date..: 08/17/10 **Prep Batch #...:** 0230178
Dilution Factor: 1

PARAMETER	RESULT	REPORTING LIMIT	UNITS	METHOD
Gasoline Range Organics	ND	0.10	mg/kg	SW846 8015 MOD

SURROGATE	PERCENT RECOVERY	RECOVERY LIMITS
Trifluorotoluene	101	(78 - 141)

NOTE(S):

Calculations are performed before rounding to avoid round-off errors in calculated results.

METHOD BLANK REPORT

GC Volatiles

Client Lot #...: F0H100435 **Work Order #...:** L5QWH1AA **Matrix.....:** SOLID
MB Lot-Sample #: F0H180000-277
Prep Date.....: 08/18/10 **Analysis Time..:** 21:30
Analysis Date..: 08/18/10 **Prep Batch #...:** 0230277
Dilution Factor: 1

PARAMETER	RESULT	REPORTING LIMIT	UNITS	METHOD
Gasoline Range Organics	ND	0.10	mg/kg	SW846 8015 MOD

SURROGATE	PERCENT RECOVERY	RECOVERY LIMITS
Trifluorotoluene	94	(78 - 141)

NOTE(S):

Calculations are performed before rounding to avoid round-off errors in calculated results.

LABORATORY CONTROL SAMPLE EVALUATION REPORT

GC Volatiles

Client Lot #...: F0H100435 **Work Order #...:** L5QGC1AC **Matrix.....:** SOLID
LCS Lot-Sample#: F0H180000-178
Prep Date.....: 08/17/10 **Analysis Date..:** 08/17/10
Prep Batch #...: 0230178 **Analysis Time..:** 14:43
Dilution Factor: 1

PARAMETER	PERCENT RECOVERY	RECOVERY LIMITS	METHOD
Gasoline Range Organics	**95**	**(57 - 127)**	**SW846 8015 MOD**

SURROGATE	PERCENT RECOVERY	RECOVERY LIMITS
Trifluorotoluene	98	(78 - 141)

NOTE(S):

Calculations are performed before rounding to avoid round-off errors in calculated results.

Bold print denotes control parameters

LABORATORY CONTROL SAMPLE EVALUATION REPORT

GC Volatiles

Client Lot #...: F0H100435 **Work Order #...:** L5QWH1AC-LCS **Matrix.....:** SOLID
LCS Lot-Sample#: F0H180000-277 L5QWH1AD-LCSD
Prep Date.....: 08/18/10 **Analysis Date..:** 08/18/10
Prep Batch #...: 0230277 **Analysis Time..:** 22:05
Dilution Factor: 1

PARAMETER	PERCENT RECOVERY	RECOVERY LIMITS	RPD	RPD LIMITS	METHOD
Gasoline Range Organics	**101**	**(57 - 127)**			**SW846 8015 MOD**
	98	**(57 - 127)**	**3.2**	**(0-20)**	**SW846 8015 MOD**

SURROGATE	PERCENT RECOVERY	RECOVERY LIMITS
Trifluorotoluene	92	(78 - 141)
	90	(78 - 141)

NOTE(S):

Calculations are performed before rounding to avoid round-off errors in calculated results.

Bold print denotes control parameters

MATRIX SPIKE SAMPLE EVALUATION REPORT

GC Volatiles

Client Lot #...: F0H100435 **Work Order #...:** L5CQK1AM-MS **Matrix.....:** SOLID
MS Lot-Sample #: F0H100435-001 L5CQK1AN-MSD
Date Sampled...: 08/09/10 12:10 **Date Received..:** 08/10/10
Prep Date.....: 08/17/10 **Analysis Date..:** 08/17/10
Prep Batch #...: 0230178 **Analysis Time..:** 19:18
Dilution Factor: 1 **% Moisture.....:** 1.5

PARAMETER	PERCENT RECOVERY	RECOVERY LIMITS	RPD	RPD LIMITS	METHOD
Gasoline Range Organics	**83**	**(50 - 114)**			**SW846 8015 MOD**
	88	**(50 - 114)**	**5.2**	**(0-30)**	**SW846 8015 MOD**

SURROGATE	PERCENT RECOVERY	RECOVERY LIMITS
Trifluorotoluene	54 *	(78 - 141)
	94	(78 - 141)

NOTE(S):

Calculations are performed before rounding to avoid round-off errors in calculated results.

Bold print denotes control parameters

Results and reporting limits have been adjusted for dry weight.

* Surrogate recovery is outside stated control limits.

Tetra Tech EC, Inc.

Client Sample ID: 03-PE-IR74-001

GC Semivolatiles

Lot-Sample #...: F0H100435-001 **Work Order #...:** L5CQK1AE **Matrix.....:** SOLID
Date Sampled...: 08/09/10 12:10 **Date Received..:** 08/10/10
Prep Date.....: 08/12/10 **Analysis Date..:** 08/19/10
Prep Batch #...: 0224150 **Analysis Time..:** 13:35
Dilution Factor: 1
% Moisture.....: 1.5 **Method.....:** SW846 8015 MOD

PARAMETER	RESULT	REPORTING LIMIT	UNITS	MDL
Diesel Range Organics	ND	10	mg/kg	0.34
Motor Oil Range Organics	**55**	**10**	**mg/kg**	**0.65**

SURROGATE	PERCENT RECOVERY	RECOVERY LIMITS
o-Terphenyl	75	(30 - 150)

NOTE(S):

Results and reporting limits have been adjusted for dry weight.

Tetra Tech EC, Inc.

Client Sample ID: 03-PE-IR74-002

GC Semivolatiles

Lot-Sample #...: F0H100435-002 **Work Order #...:** L5CQ21AE **Matrix.....:** SOLID
Date Sampled...: 08/09/10 12:15 **Date Received..:** 08/10/10
Prep Date.....: 08/12/10 **Analysis Date..:** 08/19/10
Prep Batch #...: 0224150 **Analysis Time..:** 14:56
Dilution Factor: 1
% Moisture.....: 1.8 **Method.....:** SW846 8015 MOD

PARAMETER	RESULT	REPORTING LIMIT	UNITS	MDL
Diesel Range Organics	ND	10	mg/kg	0.34
Motor Oil Range Organics	**59**	**10**	**mg/kg**	**0.65**

SURROGATE	PERCENT RECOVERY	RECOVERY LIMITS
o-Terphenyl	70	(30 - 150)

NOTE(S):

Results and reporting limits have been adjusted for dry weight.

Tetra Tech EC, Inc.

Client Sample ID: 03-PE-IR74-003

GC Semivolatiles

Lot-Sample #...: F0H100435-003 **Work Order #...:** L5CQ31AE **Matrix.....:** SOLID
Date Sampled...: 08/09/10 12:18 **Date Received..:** 08/10/10
Prep Date.....: 08/12/10 **Analysis Date..:** 08/19/10
Prep Batch #...: 0224150 **Analysis Time..:** 15:23
Dilution Factor: 4
% Moisture.....: 1.8 **Method.....:** SW846 8015 MOD

PARAMETER	RESULT	REPORTING LIMIT	UNITS	MDL
Diesel Range Organics	ND	41	mg/kg	1.4
Motor Oil Range Organics	**160 D**	**41**	**mg/kg**	**2.6**

SURROGATE	PERCENT RECOVERY	RECOVERY LIMITS
o-Terphenyl	80	(30 - 150)

NOTE(S):

Results and reporting limits have been adjusted for dry weight.

D Result was obtained from the analysis of a dilution.

Tetra Tech EC, Inc.

Client Sample ID: 03-PE-IR74-004

GC Semivolatiles

Lot-Sample #...: F0H100435-004 **Work Order #...:** L5CQ51AE **Matrix.....:** SOLID
Date Sampled...: 08/09/10 12:20 **Date Received..:** 08/10/10
Prep Date.....: 08/12/10 **Analysis Date..:** 08/19/10
Prep Batch #...: 0224150 **Analysis Time..:** 15:50
Dilution Factor: 4
% Moisture.....: 4.2 **Method.....:** SW846 8015 MOD

PARAMETER	RESULT	REPORTING LIMIT	UNITS	MDL
Diesel Range Organics	ND	42	mg/kg	1.4
Motor Oil Range Organics	**130 D**	**42**	**mg/kg**	**2.7**

SURROGATE	PERCENT RECOVERY	RECOVERY LIMITS
o-Terphenyl	76	(30 - 150)

NOTE(S):

Results and reporting limits have been adjusted for dry weight.

D Result was obtained from the analysis of a dilution.

Tetra Tech EC, Inc.

Client Sample ID: 03-PE-IR74-005

GC Semivolatiles

Lot-Sample #...: F0H100435-005 **Work Order #...:** L5CQ61AE **Matrix.....:** SOLID
Date Sampled...: 08/09/10 12:25 **Date Received..:** 08/10/10
Prep Date.....: 08/12/10 **Analysis Date..:** 08/19/10
Prep Batch #...: 0224150 **Analysis Time..:** 16:17
Dilution Factor: 4
% Moisture.....: 0.99 **Method.....:** SW846 8015 MOD

PARAMETER	RESULT	REPORTING LIMIT	UNITS	MDL
Diesel Range Organics	ND	40	mg/kg	1.3
Motor Oil Range Organics	**86 D**	**40**	**mg/kg**	**2.6**

SURROGATE	PERCENT RECOVERY	RECOVERY LIMITS
o-Terphenyl	76	(30 - 150)

NOTE(S):

Results and reporting limits have been adjusted for dry weight.

D Result was obtained from the analysis of a dilution.

METHOD BLANK REPORT

GC Semivolatiles

Client Lot #...: F0H100435 **Work Order #...:** L5GWK1AA **Matrix.....:** SOLID
MB Lot-Sample #: F0H120000-150
Prep Date.....: 08/12/10 **Analysis Time..:** 12:41
Analysis Date..: 08/19/10 **Prep Batch #...:** 0224150
Dilution Factor: 1

PARAMETER	RESULT	REPORTING LIMIT	UNITS	METHOD
Diesel Range Organics	ND	10	mg/kg	SW846 8015 MOD
Motor Oil Range Organics	ND	10	mg/kg	SW846 8015 MOD

SURROGATE	PERCENT RECOVERY	RECOVERY LIMITS
o-Terphenyl	79	(30 - 150)

NOTE(S):

Calculations are performed before rounding to avoid round-off errors in calculated results.

LABORATORY CONTROL SAMPLE EVALUATION REPORT

GC Semivolatiles

Client Lot #...: F0H100435 **Work Order #...:** L5GWK1AC **Matrix.....:** SOLID
LCS Lot-Sample#: F0H120000-150
Prep Date.....: 08/12/10 **Analysis Date..:** 08/19/10
Prep Batch #...: 0224150 **Analysis Time..:** 13:08
Dilution Factor: 1

PARAMETER	PERCENT RECOVERY	RECOVERY LIMITS	METHOD
Diesel Range Organics	**64**	**(50 - 121)**	**SW846 8015 MOD**

SURROGATE	PERCENT RECOVERY	RECOVERY LIMITS
o-Terphenyl	71	(30 - 150)

NOTE(S):

Calculations are performed before rounding to avoid round-off errors in calculated results.

Bold print denotes control parameters

MATRIX SPIKE SAMPLE EVALUATION REPORT

GC Semivolatiles

Client Lot #...: F0H100435 **Work Order #...:** L5CQK1AJ-MS **Matrix.....:** SOLID
MS Lot-Sample #: F0H100435-001 L5CQK1AK-MSD
Date Sampled...: 08/09/10 12:10 **Date Received..:** 08/10/10
Prep Date.....: 08/12/10 **Analysis Date..:** 08/19/10
Prep Batch #...: 0224150 **Analysis Time..:** 14:02
Dilution Factor: 1 **% Moisture.....:** 1.5

PARAMETER	PERCENT RECOVERY	RECOVERY LIMITS	RPD	RPD LIMITS	METHOD
Diesel Range Organics	**102**	**(18 - 150)**			**SW846 8015 MOD**
	96	**(18 - 150)**	**6.1**	**(0-30)**	**SW846 8015 MOD**

SURROGATE	PERCENT RECOVERY	RECOVERY LIMITS
o-Terphenyl	82	(30 - 150)
	79	(30 - 150)

NOTE(S):

Calculations are performed before rounding to avoid round-off errors in calculated results.

Bold print denotes control parameters

Results and reporting limits have been adjusted for dry weight.

Tetra Tech EC, Inc.

Client Sample ID: 03-PE-IR74-001

General Chemistry

Lot-Sample #...: F0H100435-001 **Work Order #...:** L5CQK **Matrix.....:** SOLID
Date Sampled...: 08/09/10 12:10 **Date Received..:** 08/10/10
% Moisture.....: 1.5

PARAMETER	RESULT	RL	UNITS	METHOD	PREPARATION-ANALYSIS DATE	PREP BATCH #
Percent Moisture	**1.5**	**0.10**	**%**	**MCAWW 160.3 MOD**	**08/17-08/18/10**	**0229235**

Dilution Factor: 1 Analysis Time..: 00:00 MDL.....:

Tetra Tech EC, Inc.

Client Sample ID: 03-PE-IR74-002

General Chemistry

Lot-Sample #...: F0H100435-002 **Work Order #...:** L5CQ2 **Matrix.....:** SOLID
Date Sampled...: 08/09/10 12:15 **Date Received..:** 08/10/10
% Moisture.....: 1.8

PARAMETER	RESULT	RL	UNITS	METHOD	PREPARATION-ANALYSIS DATE	PREP BATCH #
Percent Moisture	**1.8**	**0.10**	**%**	**MCAWW 160.3 MOD**	**08/17-08/18/10**	**0229235**

Dilution Factor: 1 Analysis Time..: 00:00 MDL.....:

Tetra Tech EC, Inc.

Client Sample ID: 03-PE-IR74-003

General Chemistry

Lot-Sample #...: F0H100435-003 **Work Order #...:** L5CQ3 **Matrix.....:** SOLID
Date Sampled...: 08/09/10 12:18 **Date Received..:** 08/10/10
% Moisture.....: 1.8

PARAMETER	RESULT	RL	UNITS	METHOD	PREPARATION-ANALYSIS DATE	PREP BATCH #
Percent Moisture	**1.8**	**0.10**	**%**	**MCAWW 160.3 MOD**	**08/17-08/18/10**	**0229235**

Dilution Factor: 1 Analysis Time..: 00:00 MDL.....:

Tetra Tech EC, Inc.

Client Sample ID: 03-PE-IR74-004

General Chemistry

Lot-Sample #...: F0H100435-004 **Work Order #...:** L5CQ5 **Matrix.....:** SOLID
Date Sampled...: 08/09/10 12:20 **Date Received..:** 08/10/10
% Moisture.....: 4.2

PARAMETER	RESULT	RL	UNITS	METHOD	PREPARATION-ANALYSIS DATE	PREP BATCH #
Percent Moisture	**4.2**	**0.10**	**%**	**MCAWW 160.3 MOD**	**08/17-08/18/10**	**0229235**

Dilution Factor: 1 Analysis Time..: 00:00 MDL.....:

Tetra Tech EC, Inc.

Client Sample ID: 03-PE-IR74-005

General Chemistry

Lot-Sample #...: F0H100435-005 **Work Order #...:** L5CQ6 **Matrix.....:** SOLID
Date Sampled...: 08/09/10 12:25 **Date Received..:** 08/10/10
% Moisture.....: 0.99

PARAMETER	RESULT	RL	UNITS	METHOD	PREPARATION-ANALYSIS DATE	PREP BATCH #
Percent Moisture	**0.99**	**0.10**	**%**	**MCAWW 160.3 MOD**	**08/17-08/18/10**	**0229235**

Dilution Factor: 1 Analysis Time..: 00:00 MDL.....:

SAMPLE DUPLICATE EVALUATION REPORT

General Chemistry

Client Lot #...: F0H100435 **Work Order #...:** L5CQK-SMP L5CQK-DUP **Matrix.....:** SOLID

Date Sampled...: 08/09/10 12:10 **Date Received..:** 08/10/10

% Moisture.....: 1.5

PARAM	RESULT	DUPLICATE RESULT	UNITS	RPD	RPD LIMIT	METHOD	PREPARATION-ANALYSIS DATE	PREP BATCH #
Percent Moisture						SD Lot-Sample #:	F0H100435-001	
	1.5	1.4	%	4.8	(0-30)	MCAWW 160.3 MOD	08/17-08/18/10	0229235

Dilution Factor: 1 Analysis Time..: 00:00

F0H100435

CLIENT ANALYSIS SUMMARY

Storage Loc: 2-140

Date Received: 2010-08-10

Analytical Due Date: 2010-08-19

Report Due Date: 2010-08-20

Project Manager: EKS Quote #: 86157 SDG:

Project: CTO3 HPS 3670.003 NON RAD

PO#: 1036773-6 3570.01 Report to: Sabina Sudoko

Client: 494696 Tetra Tech EC, Inc.

#SMPS in LOT: 0

Report Type: X

EDD Code: 00

This project requires compliance with the DOD QSM. Please refer to client memorandum #4. Login separate project numbers in separte lots. Change CTO number. Put lot# on COCs

LOGIN - Please login chemistry and radiochemistry into two separate lots. Up to 20 samples per lot. NO RAD SCREEN FOR GAMMA ANALYSIS!!! ALL OTHERS - SCREEN!

rad screen only for waters and solid Sr-90 AFTER gamma data is released. SEE BELOW FOR MORE INFO Solid gamma is always gamma-Radium

CALENDAR DAYS FOR ALL TATS!!! General Comments DO NOT USE GE 6!!!

SAMPLE #	CLIENT SAMPLE ID	Site ID	Client Matrix	DATE/TIME SAMPLED	WORKORDER	A
1	03-PE-IR74-001			2010-08-09 / 1210	L5CQK	SOLID

SAMPLE COMMENTS: ***DRY WT***

XX	HS	SW846	8015 MOD	SOLID, 8015, MOD, TPH DRO	13	SONICATION - Low Level	B3	TETRATECH HUNTERS POINT	PROT: B	WRK LOC	06		
XX	WU	SW846	8015 MOD	SOLID, 8015, MOD, TPH GRO	15	PURGE AND TRAP - 5 mL purge	B3	TETRATECH HUNTERS POINT	PROT: B	WRK LOC	06		
XX	D#	SW846	8270D	SOLID, 8270D, SVOA	13	SONICATION - Low Level	B3	TETRATECH HUNTERS POINT	PROT: B	WRK LOC	06	TIC: N	
XX	ZV		RAD SCREEN	SOLID, RAD SCREEN	RA	IN-HOUSE RAD SCREEN	01	STANDARD TEST SET	PROT: A	WRK LOC	06		
XX	WM	MCAW W	160.3 MOD	SOLID, 160.3 MOD, Percent Moisture	88	NO SAMPLE PREPARATION PERFORMED / DIRECT	01	STANDARD TEST SET	PROT: A	WRK LOC	06		

SAMPLE #	CLIENT SAMPLE ID	Site ID	Client Matrix	DATE/TIME SAMPLED	WORKORDER	A
2	03-PE-IR74-002			2010-08-09 / 1215	L5CQ2	SOLID

SAMPLE COMMENTS: ***DRY WT***

XX	HS	SW846	8015 MOD	SOLID, 8015, MOD, TPH DRO	13	SONICATION - Low Level	B3	TETRATECH HUNTERS POINT	PROT: B	WRK LOC	06		
XX	WU	SW846	8015 MOD	SOLID, 8015, MOD, TPH GRO	15	PURGE AND TRAP - 5 mL purge	B3	TETRATECH HUNTERS POINT	PROT: B	WRK LOC	06		
XX	D#	SW846	8270D	SOLID, 8270D, SVOA	13	SONICATION - Low Level	B3	TETRATECH HUNTERS POINT	PROT: B	WRK LOC	06	TIC: N	
XX	ZV		RAD SCREEN	SOLID, RAD SCREEN	RA	IN-HOUSE RAD SCREEN	01	STANDARD TEST SET	PROT: A	WRK LOC	06		
XX	WM	MCAW W	160.3 MOD	SOLID, 160.3 MOD, Percent Moisture	88	NO SAMPLE PREPARATION PERFORMED / DIRECT	01	STANDARD TEST SET	PROT: A	WRK LOC	06		

SAMPLE #	CLIENT SAMPLE ID	Site ID	Client Matrix	DATE/TIME SAMPLED	WORKORDER	A
3	03-PE-IR74-003			2010-08-09 / 1218	L5CQ3	SOLID

SAMPLE COMMENTS: ***DRY WT***

XX	HS	SW846	8015 MOD	SOLID, 8015, MOD, TPH DRO	13	SONICATION - Low Level	B3	TETRATECH HUNTERS POINT	PROT: B	WRK LOC	06		
XX	WU	SW846	8015 MOD	SOLID, 8015, MOD, TPH GRO	15	PURGE AND TRAP - 5 mL purge	B3	TETRATECH HUNTERS POINT	PROT: B	WRK LOC	06		
XX	D#	SW846	8270D	SOLID, 8270D, SVOA	13	SONICATION - Low Level	B3	TETRATECH HUNTERS POINT	PROT: B	WRK LOC	06	TIC: N	
XX	ZV		RAD SCREEN	SOLID, RAD SCREEN	RA	IN-HOUSE RAD SCREEN	01	STANDARD TEST SET	PROT: A	WRK LOC	06		
XX	WM	MCAW W	160.3 MOD	SOLID, 160.3 MOD, Percent Moisture	88	NO SAMPLE PREPARATION PERFORMED / DIRECT	01	STANDARD TEST SET	PROT: A	WRK LOC	06		

SAMPLE #	CLIENT SAMPLE ID	Site ID	Client Matrix	DATE/TIME SAMPLED	WORKORDER	A
4	03-PE-IR74-004			2010-08-09 / 1220	L5CQ5	SOLID

SAMPLE COMMENTS: ***DRY WT***

XX	HS	SW846	8015 MOD	SOLID, 8015, MOD, TPH DRO	13	SONICATION - Low Level	B3	TETRATECH HUNTERS POINT	PROT: B	WRK LOC	06		
XX	WU	SW846	8015 MOD	SOLID, 8015, MOD, TPH GRO	15	PURGE AND TRAP - 5 mL purge	B3	TETRATECH HUNTERS POINT	PROT: B	WRK LOC	06		
XX	D#	SW846	8270D	SOLID, 8270D, SVOA	13	SONICATION - Low Level	B3	TETRATECH HUNTERS POINT	PROT: B	WRK LOC	06	TIC: N	
XX	ZV		RAD SCREEN	SOLID, RAD SCREEN	RA	IN-HOUSE RAD SCREEN	01	STANDARD TEST SET	PROT: A	WRK LOC	06		
XX	WM	MCAW W	160.3 MOD	SOLID, 160.3 MOD, Percent Moisture	88	NO SAMPLE PREPARATION PERFORMED / DIRECT	01	STANDARD TEST SET	PROT: A	WRK LOC	06		

SAMPLE #	CLIENT SAMPLE ID	Site ID	Client Matrix	DATE/TIME SAMPLED	WORKORDER	A
5	03-PE-IR74-005			2010-08-09 / 1225	L5CQ6	SOLID

SAMPLE COMMENTS: ***DRY WT***

XX	HS	SW846	8015 MOD	SOLID, 8015, MOD, TPH DRO	13	SONICATION - Low Level	B3	TETRATECH HUNTERS POINT	PROT: B	WRK LOC	06

F0H100435

CLIENT ANALYSIS SUMMARY

Storage Loc: 2-140

Date Received: 2010-08-10

Analytical Due Date: 2010-08-19

Report Due Date: 2010-08-20

Report Type: X

EDD Code: 00

Project Manager: EKS Quote #: 86157 SDG:

Project: CTO3 HPS 3670.003 NON RAD

PO#: 1036773-6 3570.01 Report to: Sabina Sudoko

Client: 494696 Tetra Tech EC, Inc. #SMPS in LOT: 0

This project requires compliance with the DOD QSM. Please refer to client memorandum #4. Login separate project numbers in separte lots. Change CTO number. Put lot# on COC.

LOGIN - Please login chemistry and radiochemistry into two separate lots. Up to 20 samples per lot. NO RAD SCREEN FOR GAMMA ANALYSIS!!! ALL OTHERS - SCREEN!

rad screen only for waters and solid Sr-90 AFTER gamma data is released. SEE BELOW FOR MORE INFO Solid gamma is always gamma-Radium

CALENDAR DAYS FOR ALL TATS!!! General Comments DO NOT USE GE 6!!!

XX	WU	SW846	8015 MOD	SOLID, 8015, MOD, TPH GRO	15	PURGE AND TRAP - 5 mL purge	B3	TETRATECH HUNTERS POINT	PROT: B	WRK LOC	06	
XX	D#	SW846	8270D	SOLID, 8270D, SVOA	13	SONICATION - Low Level	B3	TETRATECH HUNTERS POINT	PROT: B	WRK LOC	06	TIC: N
XX	ZV		RAD SCREEN	SOLID, RAD SCREEN	RA	IN-HOUSE RAD SCREEN	01	STANDARD TEST SET	PROT: A	WRK LOC	06	
XX	WM	MCAW W	160.3 MOD	SOLID, 160.3 MOD, Percent Moisture	88	NO SAMPLE PREPARATION PERFORMED / DIRECT	01	STANDARD TEST SET	PROT: A	WRK LOC	06	

CR232

NUMBER 25197

TETRA TECH
1230 Columbia Street, Suite 500
San Diego, CA 92101 (619) 234-8696

CHAIN-OF-CUSTODY RECORD

PROJECT NAME: Hunters Point	PURCHASE ORDER NO.: 1036773-9
PROJECT LOCATION: San Francisco, CA	PROJECT NO.: 3670-003
SAMPLER NAME: Andrew Gorman	AIRBILL NUMBER: 8710 0628 694
PROJECT CONTACT: Sabina Sudoko	PROJECT CONTACT PHONE NUMBER: 949.809.5022

LABORATORY NAME: TestAmerica

LABORATORY ID (FOR LABORATORY):

ANALYSES REQUIRED

SAMPLE ID	DATE COLLECTED	TIME COLLECTED	NO. OF CONTAINER	LEVEL 3	LEVEL 4	TYPE	TAT	TPH-Extractable Petroleum Hydrocarbons	TPH-Purgeables	SVOCs						COMMENTS
03-PE-IR74-001	8-9-10	1210	4	X		S	10 DAY	X	X	X						250g 3xenc
03-PE-IR74-002	8-9-10	1215	4	X		S	10 DAY	X	X	X						
03-PE-IR74-003	8-9-10	1218	4	X		S	10 DAY	X	X	X						
03-PE-IR74-004	8-9-10	1220	4	X		S	10 DAY	X	X	X						
03-PE-IR74-005	8-9-10	1225	4	X		S	10 DAY	X	X	X						

RELINQUISHED BY (Signature): [signature]	DATE: 8-9-10	RECEIVED BY (Signature): [signature]	LABORATORY INSTRUCTIONS/COMMENTS
COMPANY: TTEC	TIME: 1640	COMPANY: FEDEX	
RELINQUISHED BY (Signature):	DATE: 8-10-10	RECEIVED BY (Signature): Jill Clark	COMPOSITE DESCRIPTION
COMPANY:	TIME: 0920	COMPANY: TA	
RELINQUISHED BY (Signature):	DATE:	RECEIVED BY (Signature):	SAMPLE CONDITION UPON RECEIPT (FOR LABORATORY)
COMPANY:	TIME:	COMPANY:	TEMPERATURE: ____ SAMPLE CONDITION: ☐ INTACT ☐ BROKEN COOLER SEAL: ☐ INTACT ☐ BROKEN

White - Laboratory; Pink - Laboratory; Canary - Project File; Manila - Data Management

TestAmerica
THE LEADER IN ENVIRONMENTAL TESTING

AB 8-10-10
Lot #(s): ~~FOE~~ FOH100435

CONDITION UPON RECEIPT FORM

Client: Tetra Tech
Quote No: 86157
COC/RFA No: 25197

232

Initiated By: [signature] Date: 8-10-10 Time: 0920

Shipping Information

Shipper: (FedEx) UPS DHL Courier Client Other: _____ Multiple Packages: Y (N)

Shipping # (s):*		Sample Temperature (s):**	
1. 8710 0628 16964	6.	1. 2	6.
2.	7.	2.	7.
3.	8.	3.	8.
4.	9.	4.	9.
5.	10.	5.	10.

*Numbered shipping lines correspond to Numbered Sample Temp lines

**Sample must be received at 4°C ± 2°C- If not, note contents below. Temperature variance does NOT affect the following: Metals-Liquid or Rad tests- Liquid or Solids

Condition (Circle "Y" for yes, "N" for no and "N/A" for not applicable):

1.	(Y) N	Are there custody seals present on the cooler?	8.	(Y) N	Are there custody seals present on bottles?
2.	Y (N) N/A	Do custody seals on cooler appear to be tampered with?	9.	Y (N) N/A	Do custody seals on bottles appear to be tampered with?
3.	(Y) N	Were contents of cooler frisked after opening, but before unpacking?	10.	Y N (N/A)	Was sample received with proper pH[1]? (If not, make note below)
4.	(Y) N	Sample received with Chain of Custody?	11.	(Y) N	Sample received in proper containers?
5.	(Y) N N/A	Does the Chain of Custody match sample ID's on the container(s)?	12.	Y N (N/A)	Headspace in VOA or TOX liquid samples? (If Yes, note sample ID's below)
6.	Y (N)	Was sample received broken?	13.	Y N (N/A)	Was Internal COC/Workshare received?
7.	(Y) N	Is sample volume sufficient for analysis?	14.	Y N (N/A)	Was pH taken by original TestAmerica lab?

[1] For DOE-AL (Pantex, LANL, Sandia) sites, pH of ALL containers received must be verified, EXCEPT VOA, TOX and soils.

Notes:

Corrective Action:
- ☐ Client Contact Name: _____ Informed by: _____
- ☐ Sample(s) processed "as is"
- ☐ Sample(s) on hold until: _____ If released, notify: _____

Project Management Review: [signature] Date: 8/11/10

THIS FORM MUST BE COMPLETED AT THE TIME THE ITEMS ARE BEING CHECKED IN. IF ANY ITEM IS COMPLETED BY SOMEONE OTHER THAN THE INITIATOR, THEN THAT PERSON IS REQUIRED TO APPLY THEIR INITIAL AND THE DATE NEXT TO THAT ITEM.

ADMIN-0004, REVISED 10/21/08 \\Slsvr01\QA\FORMS\ST-LOUIS\ADMIN\Admin004 rev11.doc

APPENDIX F

PARCEL UC3 WEST SURVEY UNIT PROJECT REPORTS

TRENCH SURVEY UNIT 166 (DCN: EMAC-8823-0003-0077)
TRENCH SURVEY UNIT 172 (DCN: EMAC-8823-0003-0080)
TRENCH SURVEY UNIT 173 (DCN: EMAC-8823-0003-0085)
TRENCH SURVEY UNIT 177 (DCN: EMAC-8823-0003-0091)
TRENCH SURVEY UNIT 178 (DCN: EMAC-8823-0003-0092)
TRENCH SURVEY UNIT 179 (DCN: EMAC-8823-0003-0093)
TRENCH SURVEY UNIT 180 (DCN: EMAC-8823-0003-0081)
TRENCH SURVEY UNIT 181 (DCN: EMAC-8823-0003-0082)

(on CD only)

This page intentionally left blank.

FINAL SURVEY UNIT 166 PROJECT REPORT

DCN: EMAC-8823-0003-0077

May 19, 2011

NAVFAC Restoration Record Number

N00217-002841

DEPARTMENT OF THE NAVY
BASE REALIGNMENT AND CLOSURE
PROGRAM MANAGEMENT OFFICE WEST
1455 FRAZEE RD, SUITE 900
SAN DIEGO, CA 92108-4310

Ser BPMOW.CY/0608
MAY 19 2011

Mr. Mark Ripperda
U.S. Environmental Protection Agency
Region IX
75 Hawthorne Street, (SFD 8-1)
San Francisco, CA 94105-3901

Mr. Larry Morgan
California Department of Public Health
1616 Capitol Avenue, (MS 7402)
P.O. Box 997377
Sacramento, CA 95899-7377

Dear Regulatory Team Members:

Enclosed are the Final Survey Unit Project Reports (SUPRs) for Survey Units 166, 169, 170, 172, Parcel UC-3 Sanitary Sewer and Storm Drain Removal Project, Hunters Point Shipyard, San Francisco, California. Included as an attachment to the reports are responses to comments (RTCs) from the draft version. This package of enclosures is collectively known as Work Package #37. Technical review of the enclosed reports has been completed by the Navy's Radiological Affairs Support Office.

The Navy anticipates Parcel UC-3 to be the future name of the utility corridor encompassing Crisp Road and the rail line that extends off the base, which is currently part of Parcel E. Parcel UC-3 will be separated from Parcel E in the Proposed Plan. For the purpose of these SUPR reports and to avoid confusion in the upcoming UC-3 radiological Removal Action Completion Report (RACR), the parcel name "UC-3" will be used to describe this portion of Parcel E. Please see Figure 1-1 of the attached reports for location of Parcel UC-3.

The Navy is providing the enclosed reports for your review only. A regulatory free release letter is not requested at this time. As previously agreed, Final SUPR acceptance will be documented as part of regulatory acceptance of the Parcel UC-3 RACR, which is a summation of all SUPRs along Crisp Road in Parcel E. If you have questions regarding the enclosed reports, please contact Mr. Chris Yantos at (619) 532-0912, or Mr. Keith Forman at (619) 532-0913.

Sincerely,

KEITH FORMAN
BRAC Environmental Coordinator
By direction of the Director

Ser BPMOW.CY/0608

MAY 19 2011

Enclosures: (1) Final Survey Unit 166 Project Report, May 2011
(2) Final Survey Unit 169 Project Report, May 2011
(3) Final Survey Unit 170 Project Report, May 2011
(4) Final Survey Unit 172 Project Report, May 2011

Copy to:

Ms. Diane Silva (2 Hard Copies, 1 unbound, CD)
NAVFAC Southwest (Code EV33)
Naval Base San Diego
2965 Mole Rd., Bldg. 3519
San Diego, CA 92136

Ms. Laurie Lowman (3 Hard Copies and 3 CDs)
Building 1971
NWS P.O. Drawer 260
Yorktown, VA. 23691-0260

Ms. Amy Brownell (CD Only)
SF Department of Public Health
1390 Market St., Suite 210
San Francisco, Ca 94102

Ms. Elaine Warren (CD only)
Office of the City Attorney
City Hall, Room 234
1 Dr. Carlton B. Goodlett Place
San Francisco, CA 94102-4682

Ms. Leslie Lundgren (Hard Copy and CD)
33 New Montgomery Street, Suite 2000
San Francisco, CA 94105

Ms. Dorinda Shipman (Hard Copy and CD)
Treadwell and Rollo
555 Montgomery St., Suite 1300
San Francisco, CA 94111

Mr. Stephen Proud (CD Only)
Lennar/BVHP
1 California St., Suite 2700
San Francisco, CA 94111

Mr. Stan DeSouza (CD Only)
1680 Mission St., First Floor
San Francisco, CA 94103-2414

Ms. Karla Brasaemle (Hard Copy and CD)
90 New Montgomery St., Suite 710
San Francisco, CA 94105

Mr. Ryan Miya (Hard Copy and CD)
Department of Toxic Substance Control
700 Heinz Avenue, Bldg. F, Suite 200
Berkeley, CA 94710

Mr. Michael Sharpless (CD Only)
Paul Hastings, et al.
55 2nd Street, 24th Floor
San Francisco, CA 94104-2635

Ms. Tamara Davidson (CD Only)
SF Health Department
101 Grove Street, Rm 217
San Francisco, CA 94102

Ms. Janice Torbet (Hard Copy and CD)
100 Larkin Street
Gov. Information Ctr., 5th Floor
San Francisco, CA 94102

Ms. Linda Malvino (Hard Copy and CD)
Mactec Engineering and Consulting, Inc.
1465 North McDowell Blvd, Suite 200
Petaluma, CA 94954

Mr. Michael McGowan (CD only)
1331 Evans Avenue
San Francisco, CA 94124

Mr. Randy Brandt (CD Only)
1111 Broadway, 6th Floor
Oakland, CA 94607

ED_006787_00017608-00926

Base Realignment and Closure
Program Management Office West
1455 Frazee Road, Suite 900
San Diego, California 92108-4310

CONTRACT NO. N62473-08-D-8823
CTO NO. 0003

FINAL

SURVEY UNIT 166 PROJECT REPORT

May 19, 2011

DCN: EMAC-8823-0003-0077

PARCEL UC3 SANITARY SEWER
AND STORM DRAIN REMOVAL PROJECT
HUNTERS POINT SHIPYARD
SAN FRANCISCO, CALIFORNIA

Base Realignment and Closure
Program Management Office West
1455 Frazee Road, Suite 900
San Diego, California 92108-4310

CONTRACT NO. N62473-08-D-8823
CTO NO. 0003

FINAL

SURVEY UNIT 166 PROJECT REPORT

May 19, 2011

PARCEL UC3 SANITARY SEWER AND STORM DRAIN REMOVAL PROJECT HUNTERS POINT SHIPYARD SAN FRANCISCO, CALIFORNIA

DCN: EMAC-8823-0003-0077

Prepared by:

TETRA TECH EC, INC.
1230 Columbia Street, Suite 750
San Diego, California 92101-8536

Daryl DeLong
Technical Lead

Erik Abkemeier, CHP, PE, CSP, CHMM
Radiation Safety Officer

Kent Weingardt
Project Manager

TABLE OF CONTENTS

PAGE

ABBREVIATIONS AND ACRONYMS iii

1.0 INTRODUCTION 1-1
1.1 PURPOSE 1-1
1.2 BACKGROUND 1-1

2.0 RELEASE CRITERIA 2-1

3.0 FINAL STATUS SURVEYS 3-1
3.1 OBJECTIVE OF THE FINAL STATUS SURVEY 3-1
3.2 SURVEY UNIT 3-1
3.2.1 Trench Survey Unit 3-1
3.2.2 Import Fill Material 3-3
3.3 REFERENCE AREA 3-3

4.0 LABORATORY ANALYSIS 4-1

5.0 STATISTICAL TESTS 5-1

6.0 DOSE MODELING 6-1
6.1 MODELING INPUT PARAMETERS USING LARGER OF MDL OR REPORTED ACTIVITY 6-1
6.2 DOSE AND RISK MODELING RESULTS 6-2

7.0 RECOMMENDATION OF FINAL UNRESTRICTED RELEASE 7-1
7.1 DERIVED CONCENTRATION GUIDELINES 7-1
7.2 DCGL MODELING 7-1
7.3 AS LOW AS REASONABLY ACHIEVABLE 7-1
7.4 ENVIRONMENTAL ALARA PROCESS 7-1
7.4.1 Identification of Potential Radiological Impacts 7-2
7.4.2 Review of Radiological Impacts 7-2
7.4.3 Performance of Qualitative ALARA Analyses 7-2
7.4.4 Performance of Quantitative ALARA Analyses 7-3
7.5 ALARA ANALYSIS RESULTS 7-4
7.6 RECOMMENDATIONS 7-4

8.0 REFERENCES 8-1

TABLE OF CONTENTS
(Continued)

PAGE

TABLES

Table 3-1 Class 1 Soil Measurements – Trench Unit 166 3-2

Table 4-1 Survey Unit 166 Laboratory Results Comparison (pCi/g) 4-2

Table 6-1 Modeling Parameters Using Larger of MDL or Reported Activity Concentrations 6-1

Table 6-2 Dose and Risk Modeling Summary 6-2

FIGURES

Figure 1-1 Parcel UC3 Survey Unit Key Plan

Figure 3-1 Parcel UC3 Survey Unit 166, Area 16

ATTACHMENTS

Attachment 1 Trench Unit 166 Radiation/Contamination Survey Form (on CD only)

Attachment 2 Laboratory Analysis Reports for Trench Unit 166 (on CD only)

Attachment 3 Quality Assurance Sample Results (on CD only)

Attachment 4 Backfill Material RESRAD Report (on CD only)

Attachment 5 Trench Unit RESRAD Report (on CD only)

Attachment 6 Response to Comments

ABBREVIATIONS AND ACRONYMS

ALARA	as low as reasonably achievable
AM	Action Memorandum
^{214}Bi	bismuth-214
COC	chemical of concern
^{137}Cs	cesium-137
DCGL	derived concentration guideline level
EPA	U.S. Environmental Protection Agency
FSS	Final Status Survey
HPS	Hunters Point Shipyard
IR	Installation Restoration (Program)
keV	kiloelectron volt
MDA	minimum detectable activity
MDL	method detection limit
mrem/y	millirems per year
PAH	polynuclear aromatic hydrocarbon
^{214}Pb	lead-214
pCi/g	picocuries per gram
^{226}Ra	radium-226
RASO	Radiological Affairs Support Office
ROC	radionuclide of concern
RPD	relative percent difference
^{90}Sr	strontium-90
SUPR	Survey Unit Project Report
SVOC	semivolatile organic compound
TPH	total petroleum hydrocarbons
VOC	volatile organic compound
VSP	Visual Sample Plan

ED_006787_00017608-00931

This page intentionally left blank.

1.0 INTRODUCTION

1.1 PURPOSE

This Survey Unit Project Report (SUPR) documents the work performed in Survey Unit 166 (inclusive of the trench and the associated import fill material used as backfill). The work was conducted under the final Base-wide Storm Drain and Sanitary Sewer Removal Work Plan, Revision 4 (TtEC 2010a). This SUPR summarizes the scope, approach, and radiological surveys resulting from the removal of the sanitary sewer and storm drains located within Area 16 in Parcel UC3 at Hunters Point Shipyard (HPS), San Francisco, California.

Information that was provided in the SUPRs Abstract (TtEC 2010b) will be repeated only if there were exceptions to the information specific to Survey Unit 166.

1.2 BACKGROUND

Survey Unit 166 is the net sum of Trench Unit 166 and a volume of import fill material, which was used for backfill. There are 11 trench segments associated with Trench Unit 166. Four of the trench segments are located within Installation Restoration (IR) Site 56. The chemicals of concern (COCs) associated with IR Site 56 include metals, polynuclear aromatic hydrocarbons (PAHs), semivolatile organic compounds (SVOCs), total oil and grease, total petroleum hydrocarbons (TPH), and volatile organic compounds (VOCs).

Survey Unit 166 is located in Parcel UC3 within Area 16 as identified on Figure 1-1. Trench Unit 166 consists of six separate excavations scattered along the south side of Crisp Road. The footprint of Trench Unit 166 was 134 linear feet in length (140.87 meters). The total surface area was approximately 2,744.8 square feet (255 square meters) of actual excavated trench in varying depths up to 10.5 feet below ground surface.

This page intentionally left blank.

2.0 RELEASE CRITERIA

Release criteria information for Survey Unit 166 is presented in Section 2.0 of the SUPRs Abstract (TtEC 2010b). No additional radionuclides of concern (ROCs) were identified.

This page intentionally left blank.

3.0 FINAL STATUS SURVEYS

3.1 OBJECTIVE OF THE FINAL STATUS SURVEY

The objective of the Final Status Survey (FSS) was to demonstrate that identified residual radioactivity levels inside the excavated trench and within the import fill material used as backfill met the release criteria.

3.2 SURVEY UNIT

Survey Unit 166 is located within Area 16 and consists of only a trench unit. There are 11 trench segments associated with Trench Unit 166. Four of the trench segments are located within IR Site 56. The COCs associated with IR Site 56 include metals, PAHs, SVOCs, total oil and grease, TPH, and VOCs.

3.2.1 Trench Survey Unit

Scan surveys and systematic sampling were performed in Trench Unit 166. Figure 3-1 shows the approximate systematic sampling locations, and provides the lengths of piping segments and locally assigned identification for each trench segment. Trench Unit 166 had a total surface area of 255 square meters. Systematic postexcavation samples were collected after a grid was established using Visual Sample Plan (VSP).

Measurements above the investigation level were identified during the performance of gamma scans in Trench Unit 166. Therefore, additional surveys were performed. The trench unit gamma scan ranges, investigation level, and static measurement values are provided in Attachment 1.

Three pipe sediment samples were collected from piping removed from Trench Unit 166. Gamma spectroscopy analysis identified cesium-137 (^{137}Cs) activity to be present in two of the three sediment samples with activities of 0.225 and 0.266 picocurie per gram (pCi/g).

VSP was used to generate 18 systematic sample locations based on a random start point and a triangular grid. Additionally, utilizing the above information, six biased samples were collected. None of the sample results identified activity above the release criteria for any ROC. A summary of the 18 systematic sample results is provided in Table 3-1.

The ^{137}Cs results show 9 of the 18 values less than the reported minimum detectable activity (MDA) and had flags identified that will require the values to be considered less than the MDA. In addition, four of the samples that identified ^{137}Cs activity greater than the reported MDA had a flag

ED_006787_00017608-00937

TABLE 3-1

Class 1 Soil Measurements - Trench Unit 166

Sample No.	Date	Time	^{137}Cs	Flag	MDA	≥MDA	^{90}Sr	Flag	MDA	≥MDA	^{226}Ra	Flag	MDA	≥MDA
			Results (pCi/g)											
1	4/26/2010	14:00:00	0.102		0.025	0.102					0.675	B	0.720	0.720
2	4/26/2010	14:01:00	0.032	B	0.032	0.032					0.843	F	0.736	0.843
3	4/26/2010	14:03:00	0.009	B	0.041	0.041					0.719	B	1.030	1.030
4	4/26/2010	14:04:00	0.018	B	0.040	0.040					-0.009	#B	1.180	1.180
5	4/26/2010	14:06:00	0.029	F	0.022	0.029					0.549	B	0.825	0.825
6	4/26/2010	14:07:00	0.090		0.041	0.090					1.295		1.000	1.295
7	4/26/2010	13:30:00	0.013	B	0.025	0.025					0.689	F	0.569	0.689
8	4/26/2010	13:32:00	0.027	B	0.040	0.040					-0.328	#B	0.997	0.997
9	4/26/2010	13:40:00	0.071	#	0.035	0.071					0.220	B	0.862	0.862
10	4/26/2010	11:45:00	0.112		0.042	0.112	-0.070	U	0.180	0.180	0.363	B	1.280	1.280
11	4/26/2010	11:30:00	0.040	F	0.030	0.040					-0.382	#B	0.936	0.936
12	4/26/2010	11:15:00	0.109		0.028	0.109	0.100	U	0.160	0.160	0.543	B	0.774	0.774
13	4/26/2010	14:10:00	0.048	B	0.049	0.049					0.822	B	1.170	1.170
14	4/26/2010	14:11:00	0.018	B	0.028	0.028					0.887	F	0.766	0.887
15	4/26/2010	14:13:00	0.016	B	0.034	0.034					-0.183	#B	1.060	1.060
16	4/26/2010	12:44:00	0.110		0.030	0.110					1.144		0.786	1.144
17	4/26/2010	12:35:00	0.043	F	0.034	0.043					0.768	F	0.748	0.768
18	4/26/2010	11:35:00	0.013	B	0.039	0.039					0.078	B	1.200	1.200
		mean				**0.057**				**0.170**				**0.981**
		std dev				**0.032**				**0.014**				**0.197**
		median				**0.041**				**0.170**				**0.967**

Notes:
Information concerning flags associated with the on-site laboratory data can be found in Section 4.3 and a discussion of uncertainty can be found in Section 4.8 of the SUPRs Abstract (TtEC 2010b).

Abbreviations and Acronyms:
^{137}Cs – cesium-137
MDA – minimum detectable activity
pCi/g – picocuries per gram
^{226}Ra – radium-226
^{90}Sr – strontium-90
std dev – standard deviation
SUPR – Survey Unit Project Report

associated with the activity that will require those values to be considered less than the MDA. However, the reported activity will be utilized for dose modeling purposes.

The radium-226 (^{226}Ra) results show 12 of 18 values less than the MDA or had flags identified that require the values to be considered less than the reported MDA. In addition, four of the samples that identified ^{226}Ra activity greater than the reported MDA had a flag associated with the activity that will require those values to be considered less than the MDA. However, the reported activity will be utilized for dose modeling purposes.

The "#" flag indicates that "All peaks for activity calculation had bad shape." The "B" flag indicates "Activity <MDA and failed test." The "F" flag indicates "Failed fraction or key line test." These flag indications are printed on the on-site laboratory reports in Attachment 2.

ED_006787_00017608-00938

Section 4.3 of the SUPRs Abstract (TtEC 2010b) also discusses these flags in more detail. For the "#" flag, the SUPRs Abstract (TtEC 2010b) indicates that the peak did not have a proper Poisson shape and that these peaks are suspect. For the "B" flag, the SUPRs Abstract (TtEC 2010b) notes that the peak was not statistically differentiable from the background value and the background value was considered valid; activities reported with these codes should only be considered as <MDA values. For the "F" flag, the SUPRs Abstract (TtEC 2010b) notes that the most abundant peak for the particular isotope was not observed in the correct proportions relative to other peaks, either high or low. The activity was determined using the most conservative estimate relative to using either the primary peak only or the secondary peaks only. An "F" flag occurs if the key-line abundant centroid does not meet the criteria to be a real peak based on the library. Therefore, if the centroid for a peak is too wide or too narrow, an "F" flag would be assigned to the peak because the software is forced to provide a concentration for the ROC.

Table 3-1 also contains a summary of the analytical results for radionuclides analyzed by methods other than gamma spectroscopy. The strontium-90 (^{90}Sr) results indicate that for both samples the results are less than the MDA, as designated by the "U" qualifier flag.

Summary statistics (standard deviation, median, and the mean activity greater than or equal to the MDA) are calculated and reported at the bottom of Table 3-1 for all radioanalytical results.

Complete laboratory analytical reports for each Trench Unit 166 soil sample, including duplicate and biased samples, are presented in Attachment 2.

3.2.2 Import Fill Material

Approximately 186 cubic yards of import fill material was required to complete backfilling activities. Import fill sample information for Survey Unit 166 is presented in Section 3.2.6 of the SUPRs Abstract (TtEC 2010b).

3.3 REFERENCE AREA

Reference area sample information for Survey Unit 166 is presented in Section 3.3 of the SUPRs Abstract (TtEC 2010b).

This page intentionally left blank.

4.0 LABORATORY ANALYSIS

Information concerning laboratory analysis is presented in Section 4.0 of the SUPRs Abstract (TtEC 2010b). Specifically, information concerning flags associated with the on-site laboratory data can be found in Section 4.3 and a discussion of uncertainty can be found in Section 4.8 of the SUPRs Abstract (TtEC 2010b). The average count time for the off-site laboratory was 30 minutes, while the average count time for the on-site laboratory was 67.5 minutes. The MDAs and method detection limits (MDLs) for both the on-site and off-site laboratory were well below the release criteria for any ROCs. Off-site laboratory MDLs averaged 0.052 pCi/g for ^{137}Cs and 0.060 pCi/g for ^{226}Ra, while on-site laboratory MDAs averaged 0.036 pCi/g for ^{137}Cs and 0.893 pCi/g for ^{226}Ra.

Results of the HPS and off-site laboratory data were reviewed to ensure that the activities for all ROCs were below the release criteria. These data were then evaluated by the Laboratory Manager. The on-site laboratory analyzed the samples directly for ^{226}Ra using the U.S. Environmental Protection Agency (EPA) 901.1 MOD method and calculating the ^{226}Ra activity from the 3.6 percent abundant 186.2 kiloelectron-volt (keV) gamma spectrum line for ^{226}Ra. The off-site laboratory counted the samples using the EPA 901.1 MOD method, and the ^{226}Ra results were calculated and reported from the 46.09 percent abundant 609.31 keV gamma spectrum line of bismuth-214 (^{214}Bi) after an in-growth period of greater than 21 days to allow the ^{214}Bi to approach secular equilibrium with ^{226}Ra.

To perform a detailed comparison, sample results were placed into a spreadsheet so that data could be compared directly to each laboratory. The review consisted of identifying sample results that reported activity above the MDA/MDL for any ROC. Once identified, the next step was to determine if either laboratory reported results above the MDA/MDL for the same samples. The on-site laboratory reported ^{137}Cs activity above the MDA for both samples while the off-site laboratory did not report activity above the MDL for any sample. Therefore, no direct comparison was made.

Both laboratories reported ^{226}Ra activity above the MDA/MDL for both samples. As a result, the ^{226}Ra activities for both samples were compared directly for precision. Results of the comparison showed relative percent differences (RPDs) of 50.85 and 70.13. Since the on-site laboratory reported higher ^{226}Ra activity than the off-site laboratory and the RPDs were not within 30, as stated in the Sampling and Analysis Plan (TtEC 2010a), no additional comparison was required. However, as an added comparison for informational purposes, the daughter isotopes of ^{226}Ra (^{214}Bi and lead-214 [^{214}Pb]) were compared.

When comparing the ^{214}Bi and ^{214}Pb activity, the results for both samples were comparable to the activity reported by the off-site laboratory. However, the highest ^{226}Ra activity reported by the

ED_006787_00017608-00941

off-site laboratory was 0.770 pCi/g, which is well below the activity reported for the same sample processed in the on-site laboratory. In addition, the ^{226}Ra activity reported for any sample from either laboratory was well below the release criteria. As a result, no further laboratory comparisons were made.

Table 4-1 presents a summary comparison of the on-site and off-site laboratory sample results. On-site laboratory sample results are provided in Attachment 2; quality assurance sample results from the off-site laboratory are provided in Attachment 3.

TABLE 4-1

SURVEY UNIT 166 LABORATORY RESULTS COMPARISON (pCi/g)

Sample ID	On-site Laboratory							Off-site Laboratory (QA)						
	Count Time (min)	^{137}Cs			^{226}Ra			Count Time (min)	^{137}Cs			^{226}Ra		
		Activity	MDA	2σ Error	Activity	MDA	2σ Error		Activity	MDL	2σ Error	Activity	MDL	2σ Error
03-PET-166-06	45	0.090	0.041	0.059	1.295	1.000	1.272	30	0.019	0.042	0.054	0.770	0.040	0.180
03-PET-166-16	90	0.110	0.030	0.045	1.144	0.786	0.988	30	-0.006	0.061	0.083	0.550	0.080	0.180

Sample ID	On-site Laboratory							Off-site Laboratory (QA)						
	Count Time (min)	^{214}Bi			^{214}Pb			Count Time (min)	^{214}Bi			^{214}Pb		
		Activity	MDA	2σ Error	Activity	MDA	2σ Error		Activity	MDL	2σ Error	Activity	MDL	2σ Error
03-PET-166-06	45	0.578	0.124	0.174	0.651	0.107	0.165	30	0.770	0.040	0.180	0.910	0.070	0.180
03-PET-166-16	90	0.444	0.096	0.158	0.477	0.083	0.111	30	0.550	0.080	0.180	0.570	0.040	0.140

Notes:
Information concerning flags associated with the on-site laboratory data can be found in Section 4.3 and a discussion of uncertainty can be found in Section 4.8 of the SUPRs Abstract (TtEC 2010b).

Abbreviations and Acronyms:
^{214}Bi – bismuth-214
^{137}Cs – cesium-137
MDA – minimum detectable activity
MDL – method detection limit
min – minute
^{214}Pb – lead-214
pCi/g – picocuries per gram
QA – quality assurance
^{226}Ra – radium-226
SUPR – Survey Unit Project Report

ED_006787_00017608-00942

5.0 STATISTICAL TESTS

Because the majority of the data in Table 3-1 were interpreted to be less than the MDA and all sample results were less than the release criteria for the ROCs, there was no basis for performing statistical tests for Survey Unit 166.

This page intentionally left blank.

6.0 DOSE MODELING

6.1 MODELING INPUT PARAMETERS USING LARGER OF MDL OR REPORTED ACTIVITY

Table 6-1 shows the mean concentrations of ^{137}Cs, ^{226}Ra, and ^{90}Sr from using the actual activity and replacing it with the MDL value if the reported activity was less than the MDL. The activity used to model each radionuclide is based on the isotopic net concentration.

TABLE 6-1

MODELING PARAMETERS USING LARGER OF MDL OR REPORTED ACTIVITY CONCENTRATIONS

Survey Unit 166	Residual Activity ≥ MDL (pCi/g)			Volume of Material (yd^3)	Percent of Fill	Weighted Sum (pCi/g)		
	^{137}Cs	^{90}Sr	^{226}Ra			^{137}Cs	^{90}Sr	^{226}Ra
Import Fill	0.053	0.070	1.094	186	100.00%	0.053	0.070	1.094
Backfill Material Average Activity	0.053	0.070	1.094	Weighted Sum Activity		0.053	0.070	1.094
Trench Unit Average Activity	0.057	0.170	0.981	Backfill Net Activity		0.053	0.070	0.373
Reference Area Average Activity	0.040	0.194	0.721	Trench Unit Net Activity		0.057	0.170	0.260

Abbreviations and Acronyms:
^{137}Cs – cesium-137
MDL – method detection limit
pCi/g – picocuries per gram
^{226}Ra – radium-226
^{90}Sr – strontium-90
yd^3 – cubic yard

Using the data provided in Table 6-1, the average net concentrations of residual radioactivity of material used as backfill in Survey Unit 166 were 0.053 pCi/g for ^{137}Cs, 0.070 pCi/g for ^{90}Sr, and 0.373 pCi/g for ^{226}Ra. The trench unit average net concentrations of residual radioactivity were 0.057 pCi/g for ^{137}Cs, 0.170 pCi/g for ^{90}Sr, and 0.260 pCi/g for ^{226}Ra.

ED_006787_00017608-00945

6.2 DOSE AND RISK MODELING RESULTS

Modeling resulted in a net residual dose of 3.356 millirems per year (mrem/y) with an increased cancer risk of 6.245×10^{-5} for the backfill material and 2.501 mrem/y with an increased cancer risk of 4.571×10^{-5} for the trench unit.

These results are summarized in Table 6-2. Based on these results, no further dose modeling is determined to be reasonable or prudent. The RESRAD reports can be found in Attachments 4 and 5.

TABLE 6-2

DOSE AND RISK MODELING SUMMARY

Dose and Risk Modeling Summary - Trench Unit 166										
Survey Unit	Modeling Parameter	Survey Area	Average Activity (pCi/g)			Net Activity (pCi/g)			Dose (mrem/y)	Cancer Risk
			^{137}Cs	^{90}Sr	^{226}Ra	^{137}Cs	^{90}Sr	^{226}Ra		
Backfill	Activity ≥ MDA	186 cy	0.053	0.070	1.094	0.053	0.070	0.373	3.356	6.245E-05
Trench Unit	Activity ≥ MDA	255 m^2	0.057	0.170	0.981	0.057	0.170	0.260	2.501	4.571E-05

Abbreviations and Acronyms:
^{137}Cs – cesium-137
cy – cubic yard
m^2 – square meter
MDA – minimum detectable activity
mrem/y – millirems per year
pCi/g – picocuries per gram
^{226}Ra – radium-226
^{90}Sr – strontium-90

ED_006787_00017608-00946

7.0 RECOMMENDATION OF FINAL UNRESTRICTED RELEASE

7.1 DERIVED CONCENTRATION GUIDELINES

The radionuclide-specific release criteria, referred to as derived concentration guideline levels (DCGLs), used for the FSS are equivalent to the ROC release criteria established in the final Base-wide Radiological Removal Action, Action Memorandum – Revision 2006 (AM) (DON 2006). The DCGLs are presented in terms of mass activity concentrations and refer to average levels of radiation or radioactivity above background levels.

7.2 DCGL MODELING

DCGLs were obtained from the AM and were then modeled using RESRAD Version 6.3, based on the 25 mrem/y total effective dose equivalent or were otherwise risk based; the final doses are all less than the 25 mrem/y release criterion for HPS. The model for the critical group was based on default RESRAD Version 6.5 parameters. This model shows that with all the DCGLs combined (the ROCs), the dose to the average member of the critical group for this trench unit would be 9.096 mrem/y.

7.3 AS LOW AS REASONABLY ACHIEVABLE

As low as reasonably achievable (ALARA) is a philosophy of striving for excellence in the practice of health physics and is an important aspect of radiation-safety regulations. The National Council on Radiation Protection and Measurements has stated "ALARA is simply the continuation of good radiation-protection programs and practices which traditionally have been effective in keeping the average and individual exposures for monitored workers well below the limits" (NCRP 1993). The application of ALARA clearly includes the consideration of economic and social factors, and thus will inherently be different for different sources or facilities.

The ALARA concept is founded on the professional judgment of radiation-safety managers and personnel and is not, therefore, able to be used as a measure as to whether or not a particular radiation-safety program is adequate in comparison with other programs. Additionally, the ALARA concept does not provide a numerical limit below which the ALARA concept is achieved.

7.4 ENVIRONMENTAL ALARA PROCESS

This section describes the steps taken to implement the environmental ALARA policy:

- Identification of Potential Radiological Impacts
- Review of Radiological Impacts

- Performance of Qualitative ALARA Analyses
- Performance of Quantitative ALARA Analyses

7.4.1 Identification of Potential Radiological Impacts

Each new radiological operation was subjected to ALARA reviews before work began to ensure that radiation exposures to workers, the public, and the environment met ALARA principles. ALARA reviews were conducted for all operations, practices, and procedures that have potential for individual or collective doses to workers. Reviews culminated in changes or additions to work planning documents, standard operating procedures, and radiological work permits.

These documents were used to identify activities that have potential for radiological environmental impacts and could require environmental ALARA analysis. If a radiological impact was identified that could impact the environment significantly, the Radiation Safety Officer communicated the impact to the work staff and the Radiological Affairs Support Office (RASO).

7.4.2 Review of Radiological Impacts

Radiological impacts to the environment, workers, and public from field operations were assessed for compliance with ALARA principles. Results from radiological survey activities, and air, soil, sediment, and water samples were used to assess the radiological impacts of HPS activities.

Environmental radiological impacts from radiological activities were determined using nine methods: 1) air monitoring stations located around the excavation site perimeter to track radiological impacts; several air-sampling devices monitor radionuclides in the ambient air, and the results of this monitoring are provided to the RASO on a monthly basis; 2) field monitoring and sampling to identify areas requiring additional remediation; 3) remediation of contaminated areas at or above the release criteria; 4) control of radiologically impacted areas and work sites; 5) frisking of personnel and examining equipment leaving a radiologically controlled area; 6) use of release criteria that equate to dose and risk; 7) review of historical radiological operations to allow complete investigation of all areas of radiological concern; 8) characterization of radiologically impacted sites to ensure complete removal of radioactive material above the release criteria; and 9) dosimetry worn by personnel to measure time-averaged doses from gamma radiation.

7.4.3 Performance of Qualitative ALARA Analyses

Laboratory analyses were performed for 19 different isotopes to ensure that any possible radioactive contamination has been identified. After each excavation was completed, the qualitative radiological impacts from operations were evaluated by performing a dose and risk

ED_006787_00017608-00948

assessment. The results of analysis and assessments are provided to the RASO and regulatory agencies for review.

7.4.4 Performance of Quantitative ALARA Analyses

Based on qualitative ALARA analyses, excavation projects that could cause the potential dose to the public to exceed 1 millirem (individual) or 10 person-rem (collective) are subjected to quantitative ALARA analyses using the steps described below. To date, no operations at HPS have resulted in an individual dose to the public greater than 1 mrem or a collective dose greater than 10 person-rem.

Quantitative ALARA analyses include societal, technological, economic, and public policy considerations. In addition, these ALARA analyses consider Nuclear Regulatory Commission guidance for performing the following environmental ALARA assessments:

- Identification of possible radiation protection systems, such as alternative operating methods or controls, that are reasonably achievable. The options range from the most rudimentary (base case) to the most technologically sophisticated systems.
- Quantification of exposures and doses to workers and the public in the vicinity of the work through air monitoring and dosimetry.
- Quantification of the economic factors, including the costs of purchasing, installing, operating, and maintaining the radiological equipment, and the potential health effects associated with the exposure of people and any other direct or indirect cost resulting from exposures to radiation during investigations and/or remediations.
- Identification and estimation of other health and non-health detriments and benefits, such as equipment loss and accidents.
- Evaluation of process alternatives using a quantitative cost-benefit analysis, when possible. When evaluations included assumptions, judgments, and limitations that could be quantified, and potential doses were well below the dose limit, qualitative analyses were used with full documentation.
- Implementation of the ALARA principles and monitoring of the results.

The following specific factors were used in performing a quantitative ALARA analysis:

- Dose to workers, the public, and the environment before and during work processes
- Residual dose to the local population
- Applicable alternative processes (treatments, operating methods, or controls) for site investigations or remediations
- Costs for each alternative evaluated
- Societal and environmental (positive and negative) impacts associated with alternatives

7.5 ALARA ANALYSIS RESULTS

Based on recent estimates of dose to the public from HPS operations, only qualitative ALARA analyses were required. Much of the data and analyses used for environmental ALARA evaluations were developed as part of the routine work processes.

Qualitative ALARA analyses resulted in no gamma measurements above the investigation levels; none of the sample results identified activity above the release criteria for any ROC; no air sampling results were above 10 percent of the derived air concentration; and no personnel dosimetry badges processed identified gamma dose above background levels.

7.6 RECOMMENDATIONS

Dose modeling using RESRAD determined that the potential dose of Survey Unit 166 due to activity concentrations greater than or equal to the MDL or the MDA has been determined to be 3.356 mrem/y with an increased cancer risk of 6.245×10^{-5} as shown in Table 6-2. These results are less than the EPA criteria of 15 mrem/y with an increased cancer risk of less than 3×10^{-4}, which supports free release. Therefore, no further action is recommended for Survey Unit 166.

8.0 REFERENCES

DON (Department of the Navy). 2006. Final Base-wide Radiological Removal Action, Action Memorandum – Revision 2006, Hunters Point Shipyard, San Francisco, California.

NCRP (National Council on Radiation Protection and Measurements). 1993. The National Council on Radiation Protection and Measurements, Report Number 116.

TtEC (Tetra Tech EC, Inc.). 2010a. Final Project Work Plan, Revision 4. Base-wide Storm Drain and Sanitary Sewer Removal, Hunters Point Shipyard, San Francisco, California. July 30.

——————. 2010b. Final Survey Unit Project Reports Abstract, Revision 2. January 27.

This page intentionally left blank.

FIGURES

This page intentionally left blank.

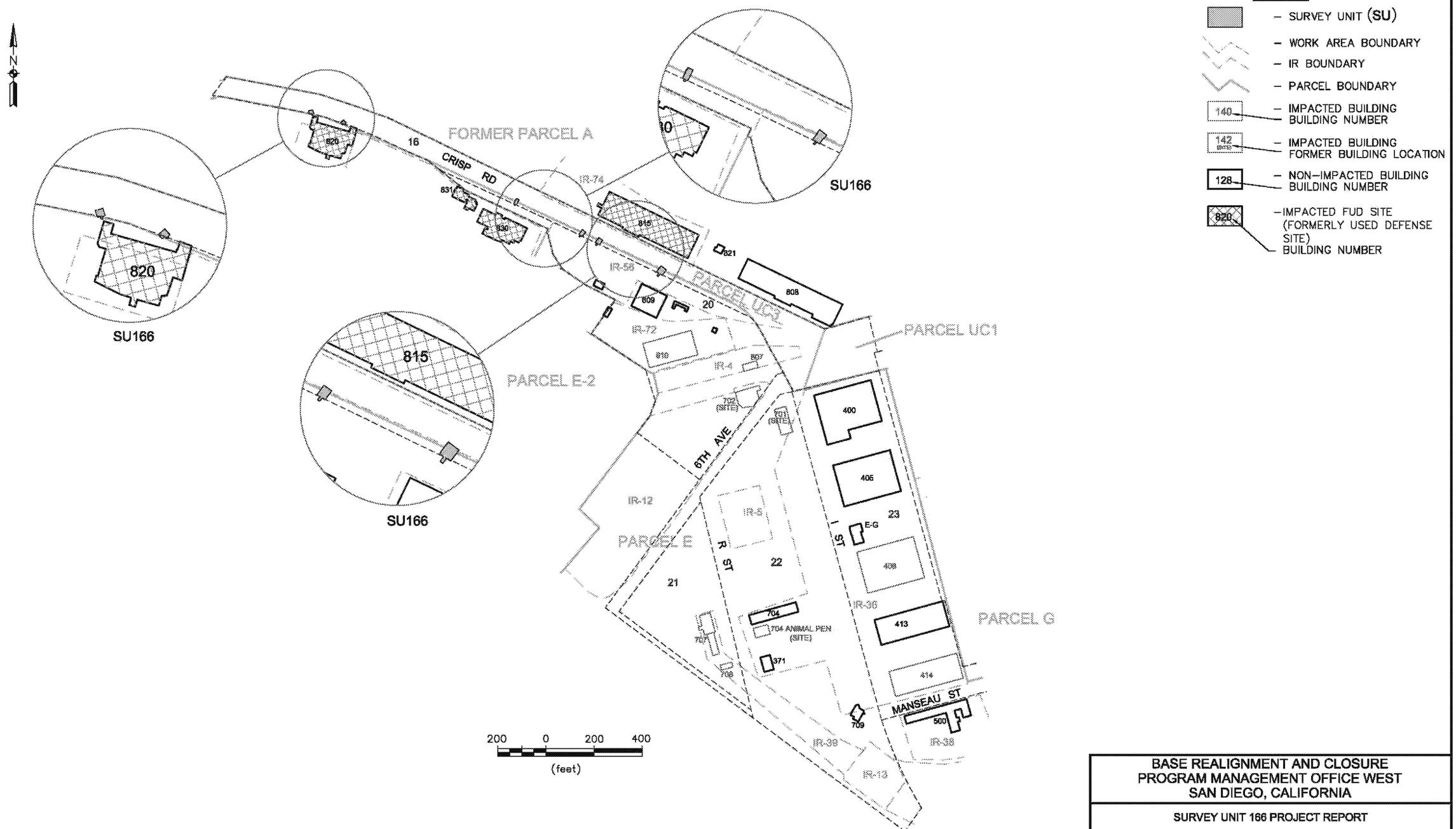

BASE REALIGNMENT AND CLOSURE
PROGRAM MANAGEMENT OFFICE WEST
SAN DIEGO, CALIFORNIA

SURVEY UNIT 166 PROJECT REPORT

FIGURE 1-1

PARCEL UC3 SURVEY UNIT KEY PLAN

HUNTERS POINT SHIPYARD, SAN FRANCISCO, CA

REVISION: A
AUTHOR: K. TODD
PROJECT NO: 106–3670
FILE: SEE BELOW

TETRA TECH EC, INC.

J:\CAD Dept\HUNTERS POINT\CTO 03-FIGURES\Figure 1-1 and 3-1\Final\Package 37\SU166_FIGURE 1-1_03-18-11.dwg

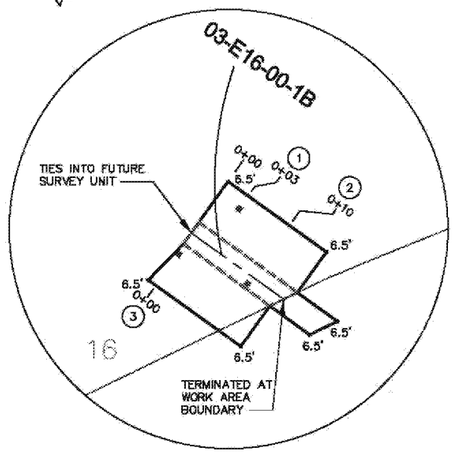

VIEW 1

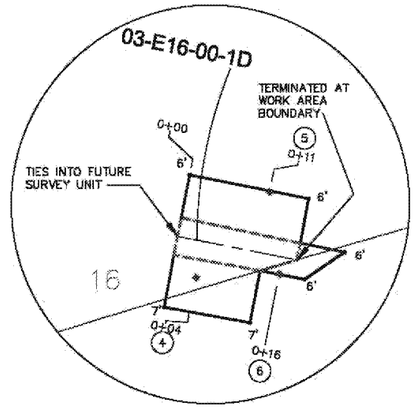

VIEW 2

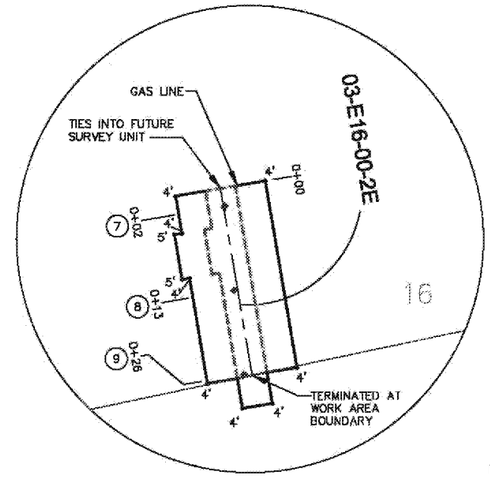

VIEW 3

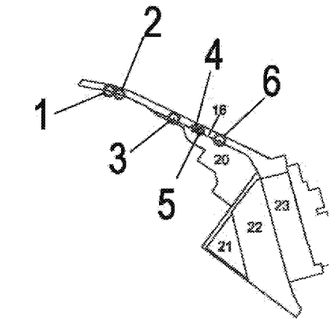

KEY PLAN

LEGEND

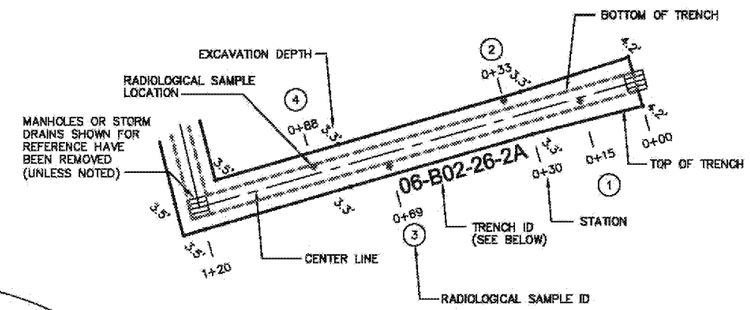

TRENCH ID

XX-XXX-XX-XX

- SEGMENT NO.
- IR SITE ID, 00 IF NON-IR SITE
- WORK/BLDG AREA
- CTO OR TO NUMBER

IR BOUNDARY
PARCEL BOUNDARY
WORK AREA BOUNDARY
EP EXTRANEOUS PIPE
140 BUILDING
CONCRETE
ROCK

SURFACE AREA = 255 SQUARE METERS
TOTAL LENGTH OF TRENCH = 134 LINEAR FEET

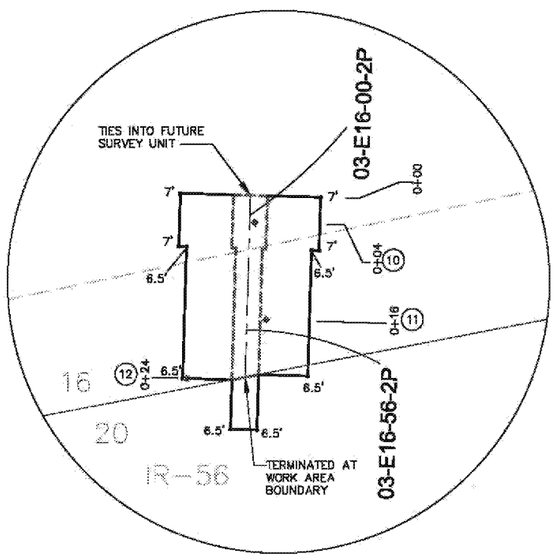

VIEW 4

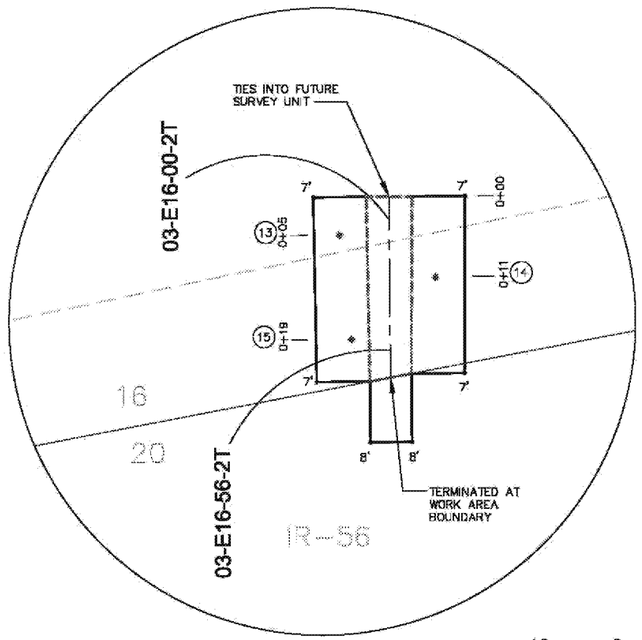

VIEW 5

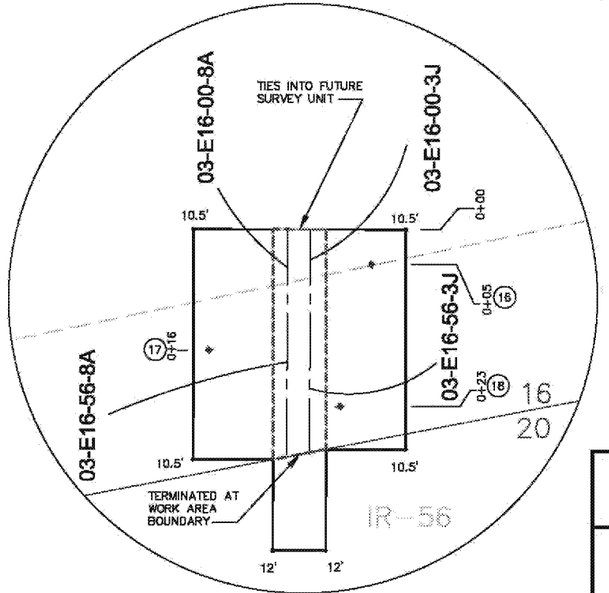

VIEW 6

10 0 10 20
(feet)

BASE REALIGNMENT AND CLOSURE PROGRAM MANAGEMENT OFFICE WEST SAN DIEGO, CALIFORNIA

SURVEY UNIT 166 PROJECT REPORT

FIGURE 3-1

PARCEL UC3 SURVEY UNIT 166, AREA 16

HUNTERS POINT SHIPYARD, SAN FRANCISCO, CA

REVISION: A
AUTHOR: K. TODD
PROJECT NO: 106-3670
FILE: SEE BELOW

TETRA TECH EC, INC.

J:\CAD Dept\HUNTERS POINT\CTO 03-FIGURES\Figure 1-1 and 3-1\Final\Package 37\SU166_FIGURE 3-1_03-18-11.dwg 3/18/11

ATTACHMENT 1

TRENCH UNIT 166
RADIATION/CONTAMINATION SURVEY FORM
(on CD only)

This page intentionally left blank.

RADIATION/CONTAMINATION SURVEY SUPPLEMENT

Date: 4/26/2010	Time: 14:00	INSTRUMENTATION USED						
		Model Inst/Det.	Serial Number	Calibration Due Date	Instrument % Efficiency	Total % Efficiency	MDC/MDA + (dpm/100cm2)	Background + (dpm/100cm2)
Survey Number: HPS-SU-166								
Location: Parcel E-1								
Surveyor: M. Snyder								
Reviewed By: (Print & Sign)		2350-1 44-10	126170 169520	11/3/2010				

Isotopes of Concern: ^{226}Ra ^{90}Sr ^{137}Cs

Description of drawing: Trench Scan Survey

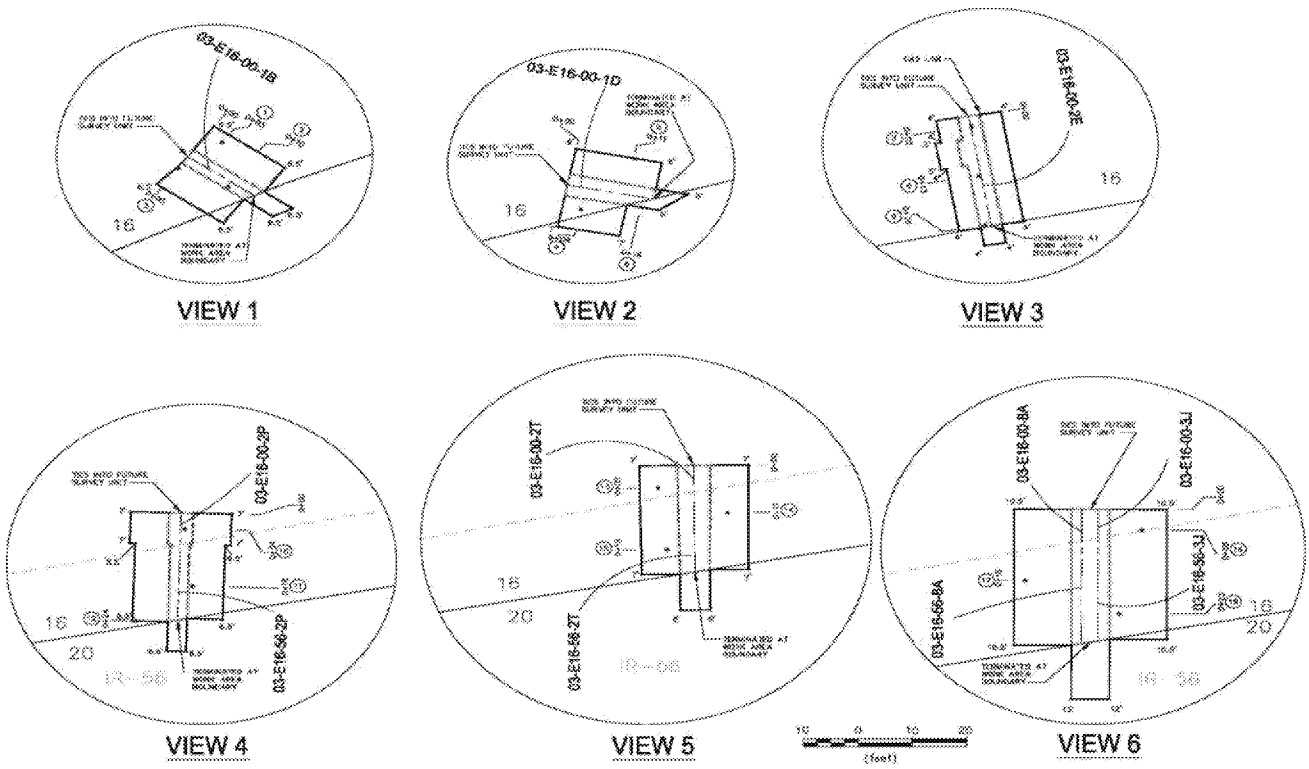

Comments:

Scan range for 2350-1 Instrument is 3.2 - 7.49 Kcpm

3 sigma investigation level for 2350-1 Instrument is 6712 cpm

Picture is representative of material surveyed.

denotes swipe location or fixed α/β readings

# denotes G/A radiation readings

#/# denotes contact / 1 meter radiation readings.

* denotes highest radiation reading on contact

LAW denotes large area masslinn wipe

Δ denotes static location.

\+ Unless Otherwise Noted

All readings in μR/hr unless otherwise noted

K = 1000

RADIATION/CONTAMINATION SURVEY SUPPLEMENT

SURVEY NUMBER: HPS-SU-166								
SURVEYOR: M. Synder					LOCATION: Parcel E-1			
Location	Exposure Rate (µR/hr)		Fixed + Removable (NET)			Removable (NET)		Comments
	Contact	1 Meter	Gamma (cpm)	Alpha dpm/100cm2	Beta/Gamma dpm/100cm2	Alpha dpm/100cm2	Beta/Gamma dpm/100cm2	
1			4375					
2			4608					
3			4647					
4			4518					
5			4724					
6			4623					
7			4471					
8			4629					
9			4588					
10			4328					
11			4574					
12			4556					
13			4129					
14			4770					
15			4607					
16			4391					
17			4766					
18			4594					
Reviewer:							Date:	

ATTACHMENT 2

LABORATORY ANALYSIS REPORTS FOR TRENCH UNIT 166 (on CD only)

This page intentionally left blank.

ORTEC g v - i (3263) Npp32 G53W3.10 27-APR-2010 13:26:55
New World Technology Spectrum name: 2N000283.An1

Sample description
Parcel E 03-PET-166-01 336g
4/26/10 14:00

Acquisition information
Start time: 27-Apr-2010 11:51:27
Live time: 5400
Real time: 5408

- -

***** S U M M A R Y O F N U C L I D E S I N S A M P L E *****

Nuclide		Time of Count Activity pCi/g	Uncertainty Counting pCi/g	2 Sigma Total pCi/g	MDA pCi/g
Ac-228	F	8.1476E-01	1.6422E-01	1.7360E-01	0.105E+00
AM-241	#B	-2.4331E-02	4.2886E-01	4.2887E-01	0.274E+00
Bi-212	F	4.0602E-01	2.2066E-01	2.2239E-01	0.223E+00
BI-214	F	2.6988E-01	1.2080E-01	1.2213E-01	0.864E-01
CO-60	#B	-2.2066E-02	7.4350E-02	7.4365E-02	0.237E-01
CS-137		1.0175E-01	3.9299E-02	3.9890E-02	0.254E-01
EU-152	#B	-2.3182E-01	3.1840E-01	3.1901E-01	0.109E+00
EU-154	F	9.2539E-02	7.6052E-02	7.6455E-02	0.695E-01
K-40		8.3353E+00	1.2065E+00	1.3386E+00	0.904E+00
Pa-234	B	9.4776E-02	8.7334E-02	8.7727E-02	0.118E+00
Pb-210	#F	0.0000E+00	3.6082E+00	3.6082E+00	0.000E+00
Pb-212	F	5.8209E-01	9.7813E-02	1.0739E-01	0.680E-01
PB-214		4.1452E-01	1.2979E-01	1.3316E-01	0.795E-01
RA-226	B	6.7505E-01	8.8814E-01	8.8961E-01	0.720E+00
Th-230	B	1.0854E+01	1.7093E+01	1.7192E+01	0.137E+02
Th-234	B	7.8244E-01	1.3744E+00	1.3764E+00	0.115E+01
Tl-208	F	1.9682E-01	5.0992E-02	5.2632E-02	0.357E-01
U-235	B	1.1187E-02	2.4005E-02	2.4020E-02	0.462E-01

- All peaks for activity calculation had bad shape.
* - Activity omitted from total
& - Activity omitted from total and all peaks had bad shape.
< - MDA value printed.
A - Activity printed, but activity < MDA.
B - Activity < MDA and failed test.
C - Area < Critical level.
F - Failed fraction or key line test.
H - Halflife limit exceeded

---------- S U M M A R Y ----------

Total Activity (32.4 to 2597.5 keV) 1.072E+01 pCi/g

Laboratory: New World Technology

ORTEC g v - i (3263) Npp32 G53W3.10 27-APR-2010 13:27:07
New World Technology Spectrum name: 3N000297.An1

Sample description
Parcel E 03-PET-166-02 325g
4/26/10 14:01

Acquisition information
Start time: 27-Apr-2010 11:52:18
Live time: 5400
Real time: 5405

- -

***** S U M M A R Y O F N U C L I D E S I N S A M P L E *****

Nuclide		Time of Count Activity pCi/g	Uncertainty Counting pCi/g	2 Sigma Total pCi/g	MDA pCi/g
Ac-228	F	6.1669E-01	2.0080E-01	2.0527E-01	0.109E+00
AM-241	B	2.5017E-02	9.1270E-02	9.1297E-02	0.746E-01
Bi-212	F	3.0749E-01	3.0527E-01	3.0599E-01	0.239E+00
BI-214	F	4.5448E-01	1.6699E-01	1.6971E-01	0.914E-01
CO-60	#B	-3.5974E-02	1.5175E-01	1.5177E-01	0.275E-01
CS-137	B	3.2128E-02	4.1012E-02	4.1069E-02	0.322E-01
EU-152	B	1.8002E-02	1.2440E-02	1.2533E-02	0.105E+00
EU-154	F	8.4748E-02	7.2477E-02	7.2832E-02	0.576E-01
K-40		9.1180E+00	1.2086E+00	1.3650E+00	0.723E+00
Pa-234	F	1.4987E-01	8.2524E-02	8.3561E-02	0.794E-01
Pb-210	B	2.4668E-01	7.5049E-01	7.5074E-01	0.642E+00
Pb-212		5.9822E-01	9.6137E-02	1.0638E-01	0.643E-01
PB-214		3.9064E-01	1.1806E-01	1.2135E-01	0.813E-01
RA-226	F	8.4326E-01	9.0516E-01	9.0741E-01	0.736E+00
Th-230	#B	-2.7106E+00	1.4381E+01	1.4389E+01	0.595E+01
Th-234	B	5.3835E-01	1.1508E+00	1.1520E+00	0.105E+01
Tl-208	F	3.1080E-01	7.9033E-02	9.6890E-02	0.413E-01
U-235	B	1.0008E-02	1.7228E-02	1.7245E-02	0.503E-01

- All peaks for activity calculation had bad shape.
* - Activity omitted from total
& - Activity omitted from total and all peaks had bad shape.
< - MDA value printed.
A - Activity printed, but activity < MDA.
B - Activity < MDA and failed test.
C - Area < Critical level.
F - Failed fraction or key line test.
H - Halflife limit exceeded

---------- S U M M A R Y ----------

Total Activity (43.6 to 2779.2 keV) 1.180E+01 pCi/g

Laboratory: New World Technology

ORTEC g v - i (3263) Npp32 G53W3.10 27-APR-2010 11:53:13
New World Technology Spectrum name: 7N000246.An1

Sample description
Parcel E 03-PET-166-03 339g
4/26/10 14:03

Acquisition information
Start time: 27-Apr-2010 10:57:04
Live time: 2700
Real time: 2704

- -

***** S U M M A R Y O F N U C L I D E S I N S A M P L E *****

Nuclide		Time of Count Activity pCi/g	Uncertainty Counting pCi/g	2 Sigma Total pCi/g	MDA pCi/g
Ac-228	F	7.5246E-01	2.7872E-01	2.8353E-01	0.140E+00
AM-241	A	1.8616E-02	1.1896E-01	1.1898E-01	0.976E-01
Bi-212	F	9.4740E-01	4.3704E-01	4.4178E-01	0.266E+00
BI-214		3.1664E-01	1.6729E-01	1.6861E-01	0.115E+00
CO-60	#F	4.0286E-02	5.3848E-02	5.3916E-02	0.373E-01
CS-137	B	9.0029E-03	5.0079E-02	5.0083E-02	0.413E-01
EU-152	B	7.5948E-02	5.1769E-02	5.2168E-02	0.147E+00
EU-154	F	8.8261E-02	8.2859E-02	8.3195E-02	0.841E-01
K-40		8.6214E+00	1.5576E+00	1.6691E+00	0.987E+00
Pa-234	F	2.3891E-01	1.8105E-01	1.8226E-01	0.136E+00
Pb-210	#B	4.8006E-01	1.1857E+00	1.1863E+00	0.812E+00
Pb-212	F	7.6659E-01	1.4549E-01	1.5676E-01	0.890E-01
PB-214	F	4.2127E-01	1.6382E-01	1.6659E-01	0.110E+00
RA-226	B	7.1925E-01	1.2354E+00	1.2366E+00	0.103E+01
Th-230	#B	-9.7174E+00	2.2761E+02	2.2762E+02	0.721E+01
Th-234	#B	1.0744E+00	1.6946E+00	1.6976E+00	0.122E+01
Tl-208	F	2.6668E-01	1.0937E-01	1.1947E-01	0.702E-01
U-235	F	1.3281E-01	1.0619E-01	1.0666E-01	0.731E-01

- All peaks for activity calculation had bad shape.
* - Activity omitted from total
& - Activity omitted from total and all peaks had bad shape.
< - MDA value printed.
A - Activity printed, but activity < MDA.
B - Activity < MDA and failed test.
C - Area < Critical level.
F - Failed fraction or key line test.
H - Halflife limit exceeded

---------- S U M M A R Y ----------

Total Activity (41.7 to 3322.2 keV) 1.233E+01 pCi/g

Laboratory: New World Technology

ORTEC g v - i (3263) Npp32 G53W3.10 27-APR-2010 14:01:38
New World Technology Spectrum name: 7N000247.An1

Sample description
Parcel E 03-PET-166-04 330g
4/26/10 14:04

Acquisition information
Start time: 27-Apr-2010 12:06:21
Live time: 2700
Real time: 2703

- -

***** S U M M A R Y O F N U C L I D E S I N S A M P L E *****

Nuclide		Time of Count Activity pCi/g	Uncertainty Counting pCi/g	2 Sigma Total pCi/g	MDA pCi/g
Ac-228	F	9.1215E-01	2.1765E-01	2.2660E-01	0.908E-01
AM-241	A	2.2224E-02	1.0120E-01	1.0122E-01	0.827E-01
Bi-212	F	6.3245E-01	4.0916E-01	4.1142E-01	0.341E+00
BI-214		4.7588E-01	1.8743E-01	1.9009E-01	0.116E+00
CO-60	#F	7.9047E-02	7.6988E-02	7.7173E-02	0.448E-01
CS-137	B	1.8323E-02	5.0261E-02	5.0276E-02	0.405E-01
EU-152	B	8.9355E-02	7.4461E-02	7.4845E-02	0.141E+00
EU-154	B	6.4888E-02	4.2206E-02	4.2563E-02	0.929E-01
K-40		8.0837E+00	1.5024E+00	1.6042E+00	0.991E+00
Pa-234	F	1.8333E-01	1.2853E-01	1.2952E-01	0.142E+00
Pb-210	#F	9.3241E-01	1.2462E+00	1.2484E+00	0.842E+00
Pb-212	F	7.4932E-01	1.5012E-01	1.6059E-01	0.953E-01
PB-214		5.4116E-01	1.8736E-01	1.9135E-01	0.109E+00
RA-226	#B	-9.2300E-03	1.4012E+00	1.4012E+00	0.118E+01
Th-230	#B	-2.2921E+00	1.7744E+01	1.7749E+01	0.988E+01
Th-234	#B	8.6406E-01	1.7820E+00	1.7839E+00	0.128E+01
Tl-208	F	3.2210E-01	1.1903E-01	1.3245E-01	0.721E-01
U-235	F	1.7467E-01	1.1887E-01	1.1960E-01	0.685E-01

- All peaks for activity calculation had bad shape.
* - Activity omitted from total
& - Activity omitted from total and all peaks had bad shape.
< - MDA value printed.
A - Activity printed, but activity < MDA.
B - Activity < MDA and failed test.
C - Area < Critical level.
F - Failed fraction or key line test.
H - Halflife limit exceeded

---------- S U M M A R Y ----------

Total Activity (41.7 to 3322.2 keV) 1.197E+01 pCi/g

Laboratory: New World Technology

ORTEC g v - i (3263) Npp32 G53W3.10 27-APR-2010 13:39:05
New World Technology Spectrum name: 1N000453.An1

Sample description
Parcel E 03-PET-166-05 357g
4/26/10 14:06

Acquisition information
Start time: 27-Apr-2010 12:53:57
Live time: 2700
Real time: 2701

- -

***** S U M M A R Y O F N U C L I D E S I N S A M P L E *****

Nuclide		Time of Count Activity pCi/g	Uncertainty Counting pCi/g	2 Sigma Total pCi/g	MDA pCi/g
Ac-228	F	9.0966E-01	2.4650E-01	2.5439E-01	0.112E+00
AM-241	#A	3.8325E-02	8.4095E-02	8.4164E-02	0.606E-01
Bi-212	F	7.8438E-01	3.5089E-01	3.5493E-01	0.193E+00
BI-214	F	5.9049E-01	1.2746E-01	1.3337E-01	0.419E-01
CO-60	#B	-2.8704E-02	2.4580E-01	2.4581E-01	0.299E-01
CS-137	F	2.9189E-02	3.0769E-02	3.0832E-02	0.216E-01
EU-152	#B	-8.1509E-02	1.1724E-01	1.1745E-01	0.824E-01
EU-154	C	5.8948E-02	6.0448E-02	6.0654E-02	0.442E-01
K-40		8.6766E+00	1.4063E+00	1.5304E+00	0.380E+00
Pa-234	#F	1.9726E-01	9.3702E-02	9.5281E-02	0.886E-01
Pb-210	F	9.1231E-01	9.6099E-01	9.6367E-01	0.634E+00
Pb-212	F	7.1724E-01	1.0934E-01	1.2222E-01	0.534E-01
Pb-214		3.2165E-01	1.3070E-01	1.3273E-01	0.114E+00
RA-226	B	5.4939E-01	1.0149E+00	1.0158E+00	0.825E+00
Th-230	#B	1.5324E+00	5.1427E+00	5.1493E+00	0.423E+01
Th-234	#	1.9406E+00	1.4072E+00	1.4192E+00	0.102E+01
Tl-208	F	2.9692E-01	7.2765E-02	9.0343E-02	0.170E-01
U-235	F	7.1388E-02	5.7356E-02	5.7609E-02	0.548E-01

- All peaks for activity calculation had bad shape.
* - Activity omitted from total
& - Activity omitted from total and all peaks had bad shape.
< - MDA value printed.
A - Activity printed, but activity < MDA.
B - Activity < MDA and failed test.
C - Area < Critical level.
F - Failed fraction or key line test.
H - Halflife limit exceeded

---------- S U M M A R Y ----------

Total Activity (36.6 to 2885.2 keV) 1.424E+01 pCi/g

Laboratory: New World Technology

ORTEC g v - i (3263) Npp32 G53W3.10 27-APR-2010 17:15:45
New World Technology Spectrum name: 1N000455.An1

Sample description
Parcel E 03-PET-166-05DUP 357g
4/26/10 14:06

Acquisition information
Start time: 27-Apr-2010 16:01:45
Live time: 2700
Real time: 2701

- -

***** S U M M A R Y O F N U C L I D E S I N S A M P L E *****

Nuclide		Time of Count Activity pCi/g	Uncertainty Counting pCi/g	2 Sigma Total pCi/g	MDA pCi/g
Ac-228	F	8.5632E-01	1.6851E-01	1.7860E-01	0.736E-01
AM-241		9.0766E-02	9.3361E-02	9.3710E-02	0.629E-01
Bi-212	F	4.7836E-01	3.5307E-01	3.5457E-01	0.241E+00
BI-214	F	6.4447E-01	1.7609E-01	1.8123E-01	0.813E-01
CO-60	#B	-2.6278E-02	1.4719E-01	1.4720E-01	0.290E-01
CS-137		5.9188E-02	4.4421E-02	4.4599E-02	0.302E-01
EU-152	B	-5.9586E-02	6.0617E-02	6.0827E-02	0.907E-01
EU-154	A	4.1845E-02	5.3482E-02	5.3600E-02	0.461E-01
K-40	#	8.6766E+00	1.4841E+00	1.6022E+00	0.419E+00
Pa-234	#B	1.9056E-02	6.5872E-02	6.5894E-02	0.614E-01
Pb-210	#	1.2611E+00	8.4150E-01	8.4733E-01	0.566E+00
Pb-212	F	7.1149E-01	1.1136E-01	1.2384E-01	0.603E-01
Pb-214		5.9703E-01	1.2325E-01	1.3050E-01	0.670E-01
RA-226	B	3.4597E-01	9.7906E-01	9.7941E-01	0.804E+00
Th-230	B	2.3757E+00	6.2987E+00	6.3115E+00	0.514E+01
Th-234	#	2.8969E+00	1.2182E+00	1.2490E+00	0.913E+00
Tl-208	F	1.4839E-01	3.7138E-02	4.5775E-02	0.388E-01
U-235	F	7.3454E-02	6.6668E-02	6.6899E-02	0.514E-01

- All peaks for activity calculation had bad shape.
* - Activity omitted from total
& - Activity omitted from total and all peaks had bad shape.
< - MDA value printed.
A - Activity printed, but activity < MDA.
B - Activity < MDA and failed test.
C - Area < Critical level.
F - Failed fraction or key line test.
H - Halflife limit exceeded

---------- S U M M A R Y ----------

Total Activity (36.6 to 2885.2 keV) 1.618E+01 pCi/g

Laboratory: New World Technology

ORTEC g v - i (3263) Npp32 G53W3.10 27-APR-2010 14:49:53
New World Technology Spectrum name: 2N000284.An1

Sample description
Parcel E 03-PET-166-06 363g
4/26/10 14:07

Acquisition information
Start time: 27-Apr-2010 13:34:51
Live time: 2700
Real time: 2704

- -

***** S U M M A R Y O F N U C L I D E S I N S A M P L E *****

Nuclide		Time of Count Activity pCi/g	Uncertainty 2 Sigma Counting pCi/g	Total pCi/g	MDA pCi/g
Ac-228	F	1.0895E+00	2.9805E-01	3.0741E-01	0.167E+00
AM-241	#B	-1.2905E-01	1.0984E+00	1.0985E+00	0.161E+00
Bi-212	F	7.1981E-01	4.6215E-01	4.6474E-01	0.333E+00
BI-214	F	5.7823E-01	1.7009E-01	1.7438E-01	0.124E+00
CO-60	#B	2.6727E-02	2.3622E-02	2.3691E-02	0.335E-01
CS-137		9.0410E-02	5.9064E-02	5.9376E-02	0.413E-01
EU-152	B	-9.7911E-02	8.5025E-02	8.5430E-02	0.162E+00
EU-154	F	1.0457E-01	9.7050E-02	9.7454E-02	0.932E-01
K-40		7.8545E+00	1.5572E+00	1.6503E+00	0.117E+01
Pa-234	F	3.0216E-01	1.6678E-01	1.6887E-01	0.146E+00
Pb-210	#F	0.0000E+00	5.5584E+00	5.5584E+00	0.000E+00
Pb-212		9.3321E-01	1.4898E-01	1.6506E-01	0.943E-01
PB-214	F	6.5103E-01	1.5853E-01	1.6528E-01	0.107E+00
RA-226		1.2950E+00	1.2679E+00	1.2717E+00	0.100E+01
Th-230	#B	-1.6556E+00	8.7032E+00	8.7077E+00	0.703E+01
Th-234	#	3.7109E+00	2.7830E+00	2.8053E+00	0.171E+01
Tl-208	F	3.0377E-01	9.5277E-02	9.7378E-02	0.506E-01
U-235	F	1.2340E-01	9.6723E-02	9.7172E-02	0.629E-01

- All peaks for activity calculation had bad shape.
* - Activity omitted from total
& - Activity omitted from total and all peaks had bad shape.
< - MDA value printed.
A - Activity printed, but activity < MDA.
B - Activity < MDA and failed test.
C - Area < Critical level.
F - Failed fraction or key line test.
H - Halflife limit exceeded

---------- S U M M A R Y ----------

Total Activity (32.4 to 2597.5 keV) 1.723E+01 pCi/g

Laboratory: New World Technology

ORTEC g v - i (3263) Npp32 G53W3.10 28-APR-2010 18:05:44
New World Technology Spectrum name: 1N000464.An1

Sample description
Parcel E 03-PET-166-07 345g
4/26/10 13:30

Acquisition information
Start time: 28-Apr-2010 16:23:36
Live time: 5400
Real time: 5403

- -

***** S U M M A R Y O F N U C L I D E S I N S A M P L E *****

Nuclide		Time of Count Activity pCi/g	Uncertainty 2 Sigma Counting pCi/g	Total pCi/g	MDA pCi/g
Ac-228	F	6.1078E-01	1.4262E-01	1.4873E-01	0.102E+00
AM-241	#A	-3.5891E-03	6.4278E-02	6.4279E-02	0.226E-01
Bi-212	F	6.1811E-01	3.4160E-01	3.4418E-01	0.223E+00
BI-214	F	6.3090E-01	1.1121E-01	1.1886E-01	0.467E-01
CO-60	#B	2.0080E-03	1.0869E-02	1.0870E-02	0.980E-02
CS-137	B	1.2829E-02	3.0969E-02	3.0981E-02	0.252E-01
EU-152	B	-1.3795E-01	2.3542E-01	2.3571E-01	0.615E-01
EU-154	C	5.1686E-02	4.1621E-02	4.1851E-02	0.281E-01
K-40		1.0567E+01	1.1541E+00	1.3683E+00	0.504E+00
Pa-234	B	2.1150E-02	7.0999E-02	7.1023E-02	0.587E-01
Pb-210	B	4.1699E-01	5.5885E-01	5.5981E-01	0.465E+00
Pb-212		7.3160E-01	8.0884E-02	9.8210E-02	0.437E-01
Pb-214		6.7586E-01	1.1731E-01	1.2696E-01	0.531E-01
RA-226	F	6.8889E-01	7.0644E-01	7.0835E-01	0.569E+00
Th-230	#B	2.5043E+00	4.5411E+00	4.5609E+00	0.347E+01
Th-234	B	5.1454E-01	8.5875E-01	8.6014E-01	0.797E+00
Tl-208	F	3.5858E-01	7.3580E-02	9.7957E-02	0.879E-02
U-235	F	4.1639E-02	6.0616E-02	6.0698E-02	0.400E-01

- All peaks for activity calculation had bad shape.
* - Activity omitted from total
& - Activity omitted from total and all peaks had bad shape.
< - MDA value printed.
A - Activity printed, but activity < MDA.
B - Activity < MDA and failed test.
C - Area < Critical level.
F - Failed fraction or key line test.
H - Halflife limit exceeded

---------- S U M M A R Y ----------

Total Activity (36.6 to 2885.2 keV) 1.419E+01 pCi/g

Laboratory: New World Technology

ORTEC g v - i (3263) Npp32 G53W3.10 27-APR-2010 15:04:22
New World Technology Spectrum name: 7N000248.An1

Sample description
Parcel E 03-PET-166-08 362g
4/26/10 13:32

Acquisition information
Start time: 27-Apr-2010 14:13:02
Live time: 2700
Real time: 2704

- -

***** S U M M A R Y O F N U C L I D E S I N S A M P L E *****

Nuclide		Time of Count Activity pCi/g	Uncertainty Counting pCi/g	2 Sigma Total pCi/g	MDA pCi/g
Ac-228	F	8.1833E-01	2.7636E-01	2.8209E-01	0.123E+00
AM-241	#A	8.6559E-03	5.5152E-02	5.5158E-02	0.504E-01
Bi-212	F	8.1233E-01	4.3295E-01	4.3647E-01	0.323E+00
BI-214		4.5141E-01	2.1689E-01	2.1896E-01	0.118E+00
CO-60	#B	-3.3149E-03	5.0723E-02	5.0723E-02	0.366E-01
CS-137	B	2.6872E-02	5.0610E-02	5.0642E-02	0.399E-01
EU-152	B	1.8416E-02	1.5505E-02	1.5584E-02	0.117E+00
EU-154	F	1.0691E-01	9.1971E-02	9.2416E-02	0.799E-01
K-40		1.0581E+01	1.6221E+00	1.7814E+00	0.930E+00
Pa-234	B	9.9143E-02	9.0876E-02	9.1290E-02	0.100E+00
Pb-210	B	2.8635E-03	8.0215E-01	8.0215E-01	0.691E+00
Pb-212	F	6.5568E-01	1.2496E-01	1.3456E-01	0.836E-01
PB-214	F	3.8163E-01	1.1987E-01	1.2297E-01	0.102E+00
RA-226	#B	-3.2759E-01	2.2301E+00	2.2303E+00	0.997E+00
Th-230	#B	-9.7845E+00	7.3808E+00	7.3808E+00	0.327E+01
Th-234	#B	1.0547E+00	1.8507E+00	1.8534E+00	0.126E+01
Tl-208	F	2.0407E-01	5.9578E-02	7.0028E-02	0.657E-01
U-235	F	7.8151E-02	1.0540E-01	1.0557E-01	0.669E-01

- All peaks for activity calculation had bad shape.
* - Activity omitted from total
& - Activity omitted from total and all peaks had bad shape.
< - MDA value printed.
A - Activity printed, but activity < MDA.
B - Activity < MDA and failed test.
C - Area < Critical level.
F - Failed fraction or key line test.
H - Halflife limit exceeded

---------- S U M M A R Y ----------

Total Activity (41.7 to 3322.2 keV) 1.390E+01 pCi/g

Laboratory: New World Technology

ORTEC g v - i (3263) Npp32 G53W3.10 27-APR-2010 15:55:54
New World Technology Spectrum name: 1N000454.An1

Sample description
Parcel E 03-PET-166-09 329g
4/26/10 13:40

Acquisition information
Start time: 27-Apr-2010 14:45:52
Live time: 2700
Real time: 2701

- -

***** S U M M A R Y O F N U C L I D E S I N S A M P L E *****

Nuclide		Time of Count Activity pCi/g	Uncertainty 2 Sigma Counting pCi/g	Total pCi/g	MDA pCi/g
Ac-228	F	7.3086E-01	2.2708E-01	2.3263E-01	0.749E-01
AM-241	#A	1.8478E-02	5.6426E-02	5.6450E-02	0.479E-01
Bi-212	F	5.9887E-01	4.2230E-01	4.2426E-01	0.276E+00
BI-214	F	5.0047E-01	1.6429E-01	1.6763E-01	0.743E-01
CO-60	#B	-3.6849E-02	4.8255E-01	4.8256E-01	0.296E-01
CS-137	#	7.1141E-02	6.5449E-02	6.5623E-02	0.354E-01
EU-152	B	-4.5273E-03	2.0521E-03	2.0877E-03	0.869E-01
EU-154	A	3.7185E-02	5.8356E-02	5.8441E-02	0.445E-01
K-40		1.0470E+01	1.5909E+00	1.7497E+00	0.412E+00
Pa-234	F	8.5718E-02	9.4379E-02	9.4677E-02	0.812E-01
Pb-210		9.4198E-01	7.8075E-01	7.8426E-01	0.571E+00
Pb-212		5.9030E-01	1.1163E-01	1.2034E-01	0.604E-01
Pb-214		4.8161E-01	1.3398E-01	1.3838E-01	0.612E-01
RA-226	B	2.2036E-01	1.0397E+00	1.0398E+00	0.862E+00
Th-230	#B	-1.3188E+00	3.9518E+01	3.9518E+01	0.328E+01
Th-234		1.5200E+00	1.1744E+00	1.1833E+00	0.104E+01
Tl-208	#F	1.0318E-01	3.5648E-02	4.0212E-02	0.569E-01
U-235	B	4.4608E-02	8.1361E-02	8.1431E-02	0.545E-01

- All peaks for activity calculation had bad shape.
* - Activity omitted from total
& - Activity omitted from total and all peaks had bad shape.
< - MDA value printed.
A - Activity printed, but activity < MDA.
B - Activity < MDA and failed test.
C - Area < Critical level.
F - Failed fraction or key line test.
H - Halflife limit exceeded

---------- S U M M A R Y ----------

Total Activity (36.6 to 2885.2 keV) 1.590E+01 pCi/g

Laboratory: New World Technology

ORTEC g v - i (3263) Npp32 G53W3.10 27-APR-2010 16:07:41
New World Technology Spectrum name: 2N000285.An1

Sample description
Parcel E 03-PET-166-10 259g
4/26/10 11:45

Acquisition information
Start time: 27-Apr-2010 14:53:24
Live time: 2700
Real time: 2704

- -

***** S U M M A R Y O F N U C L I D E S I N S A M P L E *****

Nuclide		Time of Count Activity pCi/g	Uncertainty 2 Sigma Counting pCi/g	Total pCi/g	MDA pCi/g
Ac-228	F	6.0076E-01	2.6418E-01	2.6743E-01	0.172E+00
AM-241	#B	-1.5214E-02	3.7881E-01	3.7881E-01	0.305E+00
Bi-212		7.6940E-01	4.3177E-01	4.3494E-01	0.307E+00
BI-214	F	4.6807E-01	2.4501E-01	2.4698E-01	0.165E+00
CO-60	#B	1.0304E-03	7.8394E-04	7.8703E-04	0.392E-01
CS-137		1.1169E-01	6.5111E-02	6.5543E-02	0.418E-01
EU-152	B	9.2301E-02	5.7712E-02	5.8241E-02	0.208E+00
EU-154	B	8.8883E-02	6.9575E-02	6.9981E-02	0.907E-01
K-40		3.0350E+00	1.6601E+00	1.6735E+00	0.163E+01
Pa-234	F	2.3457E-01	1.2227E-01	1.2398E-01	0.188E+00
Pb-210	#F	0.0000E+00	7.0965E+00	7.0965E+00	0.000E+00
Pb-212	F	3.5387E-01	1.7136E-01	1.7347E-01	0.110E+00
PB-214	F	3.6031E-01	2.4269E-01	2.4407E-01	0.145E+00
RA-226	B	3.6306E-01	1.5562E+00	1.5564E+00	0.128E+01
Th-230	B	7.4316E+00	2.7547E+01	2.7576E+01	0.223E+02
Th-234	#	3.4516E+00	2.8569E+00	2.8757E+00	0.186E+01
Tl-208	#F	1.5699E-01	1.0080E-01	1.0134E-01	0.560E-01
U-235	B	3.0909E-02	1.0049E-01	1.0051E-01	0.840E-01

- All peaks for activity calculation had bad shape.
* - Activity omitted from total
& - Activity omitted from total and all peaks had bad shape.
< - MDA value printed.
A - Activity printed, but activity < MDA.
B - Activity < MDA and failed test.
C - Area < Critical level.
F - Failed fraction or key line test.
H - Halflife limit exceeded

---------- S U M M A R Y ----------

Total Activity (32.4 to 2597.5 keV) 9.308E+00 pCi/g

Laboratory: New World Technology

ORTEC g v - i (3263) Npp32 G53W3.10 27-APR-2010 16:39:28
New World Technology Spectrum name: 7N000249.An1

Sample description
Parcel E 03-PET-166-11 328g
4/26/10 11:30

Acquisition information
Start time: 27-Apr-2010 15:51:06
Live time: 2700
Real time: 2703

- -

***** S U M M A R Y O F N U C L I D E S I N S A M P L E *****

Nuclide		Time of Count Activity pCi/g	Uncertainty Counting pCi/g	2 Sigma Total pCi/g	MDA pCi/g
Ac-228	F	5.7989E-01	2.6926E-01	2.7222E-01	0.138E+00
AM-241	A	6.2966E-02	1.1769E-01	1.1782E-01	0.948E-01
Bi-212	F	8.9723E-01	4.2641E-01	4.3076E-01	0.255E+00
BI-214	C	2.7352E-01	1.8589E-01	1.8678E-01	0.122E+00
CO-60	#B	-1.6142E-02	7.7097E-02	7.7105E-02	0.308E-01
CS-137	F	4.0390E-02	4.1588E-02	4.1677E-02	0.300E-01
EU-152	F	1.5183E-01	9.5558E-02	9.6421E-02	0.132E+00
EU-154	B	6.3675E-02	8.4268E-02	8.4441E-02	0.678E-01
K-40		2.8186E+00	1.1862E+00	1.2023E+00	0.102E+01
Pa-234	#F	1.7501E-01	1.4050E-01	1.4134E-01	0.816E-01
Pb-210	B	6.5601E-01	1.0061E+00	1.0074E+00	0.714E+00
Pb-212	F	3.2516E-01	1.6491E-01	1.6676E-01	0.934E-01
PB-214	F	2.0601E-01	1.3094E-01	1.3177E-01	0.112E+00
RA-226	#B	-3.8245E-01	2.1324E+00	2.1326E+00	0.936E+00
Th-230	#B	-4.5171E+00	2.2826E+01	2.2839E+01	0.829E+01
Th-234	#B	4.6146E-01	1.6296E+00	1.6302E+00	0.118E+01
Tl-208	F	1.4804E-01	8.2430E-02	8.6645E-02	0.725E-01
U-235	F	1.2495E-01	1.4635E-01	1.4665E-01	0.526E-01

- All peaks for activity calculation had bad shape.
* - Activity omitted from total
& - Activity omitted from total and all peaks had bad shape.
< - MDA value printed.
A - Activity printed, but activity < MDA.
B - Activity < MDA and failed test.
C - Area < Critical level.
F - Failed fraction or key line test.
H - Halflife limit exceeded

---------- S U M M A R Y ----------

Total Activity (41.7 to 3322.2 keV) 4.769E+00 pCi/g

Laboratory: New World Technology

ORTEC g v - i (3263) Npp32 G53W3.10 27-APR-2010 18:18:45
New World Technology Spectrum name: 2N000286.An1

Sample description
Parcel E 03-PET-166-12 309g
4/26/10 11:15

Acquisition information
Start time: 27-Apr-2010 17:26:11
Live time: 5400
Real time: 5408

- -

***** S U M M A R Y O F N U C L I D E S I N S A M P L E *****

Nuclide		Time of Count Activity pCi/g	Uncertainty 2 Sigma Counting pCi/g	Total pCi/g	MDA pCi/g
Ac-228	F	6.1898E-01	2.0651E-01	2.1090E-01	0.118E+00
AM-241	#B	-1.9128E-01	2.5107E-01	2.5107E-01	0.858E-01
Bi-212	F	2.4876E-01	2.5878E-01	2.5934E-01	0.191E+00
BI-214	F	2.8647E-01	1.6721E-01	1.6830E-01	0.950E-01
CO-60	#B	9.9614E-03	5.7795E-03	5.8186E-03	0.274E-01
CS-137		1.0904E-01	4.3141E-02	4.3759E-02	0.282E-01
EU-152	#B	-3.6922E-02	2.5393E-02	2.5585E-02	0.131E+00
EU-154	B	5.9308E-02	7.0487E-02	7.0666E-02	0.601E-01
K-40		7.2222E+00	1.1618E+00	1.2658E+00	0.957E+00
Pa-234	F	1.0680E-01	9.8013E-02	9.8459E-02	0.865E-01
Pb-210	#F	0.0000E+00	8.6677E+00	8.6677E+00	0.000E+00
Pb-212		3.6859E-01	9.5820E-02	9.9845E-02	0.725E-01
PB-214	F	3.2166E-01	1.6420E-01	1.6582E-01	0.917E-01
RA-226	B	5.4316E-01	9.4801E-01	9.4889E-01	0.774E+00
Th-230	#F	1.8524E+01	2.0504E+01	2.0743E+01	0.138E+02
Th-234	B	9.2717E-01	1.4290E+00	1.4317E+00	0.120E+01
Tl-208	F	1.7735E-01	7.5662E-02	7.6568E-02	0.404E-01
U-235	B	2.2479E-02	6.7760E-02	6.7781E-02	0.480E-01

- All peaks for activity calculation had bad shape.
* - Activity omitted from total
& - Activity omitted from total and all peaks had bad shape.
< - MDA value printed.
A - Activity printed, but activity < MDA.
B - Activity < MDA and failed test.
C - Area < Critical level.
F - Failed fraction or key line test.
H - Halflife limit exceeded

---------- S U M M A R Y ----------

Total Activity (32.4 to 2597.5 keV) 9.104E+00 pCi/g

Laboratory: New World Technology

ORTEC g v - i (3263) Npp32 G53W3.10 27-APR-2010 18:05:16
New World Technology Spectrum name: 7N000250.An1

Sample description
Parcel E 03-PET-166-13 323g
4/26/10 14:10

Acquisition information
Start time: 27-Apr-2010 16:47:45
Live time: 2700
Real time: 2702

- -

***** S U M M A R Y O F N U C L I D E S I N S A M P L E *****

Nuclide		Time of Count Activity pCi/g	Uncertainty Counting pCi/g	2 Sigma Total pCi/g	MDA pCi/g
Ac-228	F	8.8661E-01	2.7186E-01	2.7868E-01	0.132E+00
AM-241	#	1.2221E-01	1.4681E-01	1.4721E-01	0.976E-01
Bi-212	F	6.0839E-01	4.9529E-01	4.9702E-01	0.359E+00
BI-214		4.5485E-01	1.8243E-01	1.8492E-01	0.118E+00
CO-60	#B	-2.1406E-02	9.1052E-02	9.1063E-02	0.339E-01
CS-137	B	4.8148E-02	6.3837E-02	6.3919E-02	0.492E-01
EU-152	B	-5.6541E-02	6.7953E-02	6.8122E-02	0.162E+00
EU-154	B	4.7366E-02	6.0175E-02	6.0308E-02	0.933E-01
K-40	#	8.4429E+00	1.6415E+00	1.7434E+00	0.105E+01
Pa-234	F	1.6200E-01	1.6918E-01	1.6977E-01	0.127E+00
Pb-210	B	5.2139E-02	9.3620E-01	9.3621E-01	0.802E+00
Pb-212	F	8.2522E-01	1.5803E-01	1.7006E-01	0.101E+00
PB-214	F	6.5943E-01	2.0274E-01	2.0820E-01	0.113E+00
RA-226	B	8.2244E-01	1.4015E+00	1.4029E+00	0.117E+01
Th-230	#B	-5.1671E+00	2.6553E+01	2.6567E+01	0.801E+01
Th-234	#	2.8146E+00	2.1015E+00	2.1185E+00	0.138E+01
Tl-208	B	5.1389E-02	1.3896E-02	1.6703E-02	0.140E+00
U-235	F	1.5560E-01	1.2028E-01	1.2085E-01	0.743E-01

- All peaks for activity calculation had bad shape.
* - Activity omitted from total
& - Activity omitted from total and all peaks had bad shape.
< - MDA value printed.
A - Activity printed, but activity < MDA.
B - Activity < MDA and failed test.
C - Area < Critical level.
F - Failed fraction or key line test.
H - Halflife limit exceeded

---------- S U M M A R Y ----------

Total Activity (41.7 to 3322.2 keV) 1.469E+01 pCi/g

Laboratory: New World Technology

ORTEC g v - i (3263) Npp32 G53W3.10 27-APR-2010 19:18:43
New World Technology Spectrum name: 3N000299.An1

Sample description
Parcel E 03-PET-166-14 314g
4/26/10 14:11

Acquisition information
Start time: 27-Apr-2010 18:16:08
Live time: 5400
Real time: 5405

- -

***** S U M M A R Y O F N U C L I D E S I N S A M P L E *****

Nuclide		Time of Count Activity pCi/g	Uncertainty Counting pCi/g	2 Sigma Total pCi/g	MDA pCi/g
Ac-228	F	5.7364E-01	1.8437E-01	1.8858E-01	0.998E-01
AM-241	#B	-4.8248E-03	2.0126E+00	2.0126E+00	0.528E-01
Bi-212	F	4.0290E-01	2.7842E-01	2.7977E-01	0.271E+00
BI-214	F	2.6746E-01	1.2825E-01	1.2948E-01	0.797E-01
CO-60	#B	-6.9534E-03	5.3488E-02	5.3490E-02	0.327E-01
CS-137	B	1.7750E-02	3.4440E-02	3.4461E-02	0.277E-01
EU-152	#B	-1.0147E-01	8.2363E-02	8.2811E-02	0.107E+00
EU-154	F	1.1648E-01	1.0372E-01	1.0419E-01	0.591E-01
K-40		5.2182E+00	1.1074E+00	1.1654E+00	0.782E+00
Pa-234	F	1.4006E-01	1.1543E-01	1.1608E-01	0.692E-01
Pb-210	#B	-1.5866E-01	1.0864E+00	1.0864E+00	0.615E+00
Pb-212		3.5495E-01	8.5865E-02	9.0018E-02	0.623E-01
PB-214	F	2.5130E-01	1.0830E-01	1.0980E-01	0.888E-01
RA-226	F	8.8742E-01	9.4201E-01	9.4439E-01	0.766E+00
Th-230	#B	-5.8006E+00	4.5721E+01	4.5731E+01	0.626E+01
Th-234	B	1.2757E-02	1.1125E+00	1.1125E+00	0.104E+01
Tl-208	F	2.3271E-01	7.3555E-02	8.4684E-02	0.427E-01
U-235	F	6.0597E-02	5.8559E-02	5.8738E-02	0.543E-01

- All peaks for activity calculation had bad shape.
* - Activity omitted from total
& - Activity omitted from total and all peaks had bad shape.
< - MDA value printed.
A - Activity printed, but activity < MDA.
B - Activity < MDA and failed test.
C - Area < Critical level.
F - Failed fraction or key line test.
H - Halflife limit exceeded

---------- S U M M A R Y ----------

Total Activity (43.6 to 2779.2 keV) 7.050E+00 pCi/g

Laboratory: New World Technology

ORTEC g v - i (3263) Npp32 G53W3.10 27-APR-2010 19:30:55
New World Technology Spectrum name: 7N000251.An1

Sample description
Parcel E 03-PET-166-15 371g
4/26/10 14:13

Acquisition information
Start time: 27-Apr-2010 18:11:22
Live time: 2700
Real time: 2703

- -

***** S U M M A R Y O F N U C L I D E S I N S A M P L E *****

Nuclide		Time of Count Activity pCi/g	Uncertainty Counting pCi/g	2 Sigma Total pCi/g	MDA pCi/g
Ac-228	F	7.5979E-01	2.1352E-01	2.1988E-01	0.115E+00
AM-241	#A	7.0667E-02	1.2279E-01	1.2295E-01	0.824E-01
Bi-212	B	2.7962E-01	2.6024E-01	2.6094E-01	0.306E+00
BI-214		4.4762E-01	1.7788E-01	1.8036E-01	0.108E+00
CO-60	#B	3.1703E-02	2.4489E-02	2.4583E-02	0.391E-01
CS-137	B	1.6107E-02	4.2333E-02	4.2347E-02	0.341E-01
EU-152	B	3.3198E-02	3.4537E-02	3.4652E-02	0.134E+00
EU-154	F	1.5897E-01	9.8316E-02	9.9234E-02	0.674E-01
K-40		6.4149E+00	1.7233E+00	1.7802E+00	0.129E+01
Pa-234	F	2.2322E-01	1.2657E-01	1.2807E-01	0.117E+00
Pb-210	#B	2.3913E-01	1.0546E+00	1.0548E+00	0.729E+00
Pb-212	F	5.4223E-01	1.1563E-01	1.2278E-01	0.761E-01
PB-214	F	4.6118E-01	1.6520E-01	1.6849E-01	0.111E+00
RA-226	#B	-1.8291E-01	1.7919E+00	1.7920E+00	0.106E+01
Th-230	#B	-6.3266E+00	4.1964E+01	4.1978E+01	0.759E+01
Th-234	#B	5.2642E-01	1.2827E+00	1.2837E+00	0.101E+01
Tl-208	F	1.1240E-01	4.8219E-02	5.2307E-02	0.924E-01
U-235	F	1.0271E-01	7.1605E-02	7.2025E-02	0.546E-01

- All peaks for activity calculation had bad shape.
* - Activity omitted from total
& - Activity omitted from total and all peaks had bad shape.
< - MDA value printed.
A - Activity printed, but activity < MDA.
B - Activity < MDA and failed test.
C - Area < Critical level.
F - Failed fraction or key line test.
H - Halflife limit exceeded

---------- S U M M A R Y ----------

Total Activity (41.7 to 3322.2 keV) 8.728E+00 pCi/g

Laboratory: New World Technology

ORTEC g v - i (3263) Npp32 G53W3.10 27-APR-2010 20:46:36
New World Technology Spectrum name: 2N000287.An1

Sample description
Parcel E 03-PET-166-16 310g
4/26/10 12:44

Acquisition information
Start time: 27-Apr-2010 19:16:08
Live time: 5400
Real time: 5408

- -

***** S U M M A R Y O F N U C L I D E S I N S A M P L E *****

Nuclide		Time of Count Activity pCi/g	Uncertainty 2 Sigma Counting pCi/g	Total pCi/g	MDA pCi/g
Ac-228	F	7.7847E-01	1.6157E-01	1.7030E-01	0.114E+00
AM-241	#B	-6.5512E-02	6.5047E-01	6.5049E-01	0.271E+00
Bi-212	F	6.0031E-01	3.0607E-01	3.0879E-01	0.221E+00
BI-214	F	4.4432E-01	1.5518E-01	1.5797E-01	0.960E-01
CO-60	#F	4.9772E-02	4.3522E-02	4.3652E-02	0.279E-01
CS-137		1.1043E-01	4.4495E-02	4.5110E-02	0.295E-01
EU-152	#B	-2.6746E-01	3.4759E-01	3.4833E-01	0.117E+00
EU-154	F	8.1550E-02	8.3463E-02	8.3748E-02	0.700E-01
K-40		3.7795E+00	1.0632E+00	1.0952E+00	0.970E+00
Pa-234	#F	1.9688E-01	1.0383E-01	1.0526E-01	0.938E-01
Pb-210	#F	0.0000E+00	9.1630E+00	9.1630E+00	0.000E+00
Pb-212		6.6281E-01	1.0226E-01	1.1403E-01	0.693E-01
PB-214	F	4.7713E-01	1.0604E-01	1.1144E-01	0.832E-01
RA-226		1.1443E+00	9.8465E-01	9.8844E-01	0.786E+00
Th-230	#B	2.8898E+00	8.2067E+00	8.2213E+00	0.757E+01
Th-234	F	1.1967E+00	1.4541E+00	1.4585E+00	0.108E+01
Tl-208	F	2.7632E-01	7.7652E-02	7.9780E-02	0.410E-01
U-235	B	4.6090E-02	6.9835E-02	6.9922E-02	0.555E-01

- All peaks for activity calculation had bad shape.
* - Activity omitted from total
& - Activity omitted from total and all peaks had bad shape.
< - MDA value printed.
A - Activity printed, but activity < MDA.
B - Activity < MDA and failed test.
C - Area < Critical level.
F - Failed fraction or key line test.
H - Halflife limit exceeded

---------- S U M M A R Y ----------

Total Activity (32.4 to 2597.5 keV) 8.520E+00 pCi/g

Laboratory: New World Technology

ORTEC g v - i (3263) Npp32 G53W3.10 28-APR-2010 10:00:29
New World Technology Spectrum name: 3N000300.An1

Sample description
Parcel E 03-PET-166-17 319g
4/26/10 12:35

Acquisition information
Start time: 28-Apr-2010 08:21:14
Live time: 5400
Real time: 5404

- -

***** S U M M A R Y O F N U C L I D E S I N S A M P L E *****

Nuclide		Time of Count Activity pCi/g	Uncertainty Counting pCi/g	2 Sigma Total pCi/g	MDA pCi/g
Ac-228	F	5.7866E-01	2.0080E-01	2.0475E-01	0.128E+00
AM-241	F	7.3249E-02	8.7244E-02	8.7487E-02	0.699E-01
Bi-212	F	4.0617E-01	3.0983E-01	3.1106E-01	0.236E+00
BI-214	F	2.1065E-01	1.1645E-01	1.1729E-01	0.803E-01
CO-60	#B	-2.7378E-02	8.5016E-02	8.5037E-02	0.279E-01
CS-137	F	4.3069E-02	4.4222E-02	4.4317E-02	0.342E-01
EU-152	#B	-2.3781E-01	4.2557E-01	4.2605E-01	0.110E+00
EU-154	F	1.3397E-01	1.0222E-01	1.0285E-01	0.544E-01
K-40		6.9338E+00	1.0183E+00	1.1268E+00	0.532E+00
Pa-234	F	1.5213E-01	1.3895E-01	1.3958E-01	0.883E-01
Pb-210	#F	7.1355E-01	9.7327E-01	9.7487E-01	0.640E+00
Pb-212	F	3.9727E-01	8.7721E-02	9.2790E-02	0.600E-01
PB-214	F	2.3048E-01	1.2991E-01	1.3096E-01	0.813E-01
RA-226	F	7.6779E-01	9.1643E-01	9.1827E-01	0.748E+00
Th-230	#B	-1.9322E+00	1.6358E+01	1.6361E+01	0.664E+01
Th-234	B	8.9555E-01	1.4214E+00	1.4240E+00	0.105E+01
Tl-208	F	2.1599E-01	6.9916E-02	8.0034E-02	0.421E-01
U-235	F	5.5860E-02	8.2314E-02	8.2423E-02	0.524E-01

- All peaks for activity calculation had bad shape.
* - Activity omitted from total
& - Activity omitted from total and all peaks had bad shape.
< - MDA value printed.
A - Activity printed, but activity < MDA.
B - Activity < MDA and failed test.
C - Area < Critical level.
F - Failed fraction or key line test.
H - Halflife limit exceeded

---------- S U M M A R Y ----------

Total Activity (43.6 to 2779.2 keV) 8.973E+00 pCi/g

Laboratory: New World Technology

ORTEC g v - i (3263) Npp32 G53W3.10 27-APR-2010 20:35:47
New World Technology Spectrum name: 7N000252.An1

Sample description
Parcel E 03-PET-166-18 316g
4/26/10 11:35

Acquisition information
Start time: 27-Apr-2010 19:40:48
Live time: 2700
Real time: 2706

- -

***** S U M M A R Y O F N U C L I D E S I N S A M P L E *****

Nuclide		Time of Count Activity pCi/g	Uncertainty Counting pCi/g	2 Sigma Total pCi/g	MDA pCi/g
Ac-228	F	5.3288E-01	2.2247E-01	2.2550E-01	0.123E+00
AM-241	#A	7.0411E-02	1.3033E-01	1.3048E-01	0.890E-01
Bi-212	F	6.1069E-01	4.0030E-01	4.0246E-01	0.266E+00
BI-214		3.1465E-01	2.0946E-01	2.1050E-01	0.127E+00
CO-60	#B	-3.7371E-04	5.5884E-03	5.5884E-03	0.372E-01
CS-137	B	1.3388E-02	4.7527E-02	4.7535E-02	0.388E-01
EU-152	B	-9.9892E-03	9.2239E-03	9.2627E-03	0.148E+00
EU-154	B	8.8677E-02	8.4183E-02	8.4517E-02	0.905E-01
K-40		6.2631E+00	1.4248E+00	1.4900E+00	0.104E+01
Pa-234	F	2.5395E-01	2.2591E-01	2.2700E-01	0.122E+00
Pb-210	B	5.8820E-01	1.2697E+00	1.2705E+00	0.856E+00
Pb-212	F	4.5030E-01	1.3177E-01	1.3616E-01	0.938E-01
PB-214	F	2.6700E-01	1.7177E-01	1.7284E-01	0.108E+00
RA-226	B	7.8178E-02	1.4101E+00	1.4101E+00	0.120E+01
Th-230	#B	-2.6022E+00	1.5644E+01	1.5650E+01	0.855E+01
Th-234	#B	1.0229E+00	1.5695E+00	1.5725E+00	0.117E+01
Tl-208	#F	1.8117E-01	6.8380E-02	7.5785E-02	0.753E-01
U-235	F	1.5806E-01	1.3258E-01	1.3312E-01	0.741E-01

- All peaks for activity calculation had bad shape.
* - Activity omitted from total
& - Activity omitted from total and all peaks had bad shape.
< - MDA value printed.
A - Activity printed, but activity < MDA.
B - Activity < MDA and failed test.
C - Area < Critical level.
F - Failed fraction or key line test.
H - Halflife limit exceeded

---------- S U M M A R Y ----------

Total Activity (41.7 to 3322.2 keV) 8.620E+00 pCi/g

Laboratory: New World Technology

ORTEC g v - i (3263) Npp32 G53W3.10 27-APR-2010 21:04:51
New World Technology Spectrum name: 1N000456.An1

Sample description
Parcel E 03-PET-166-19 368g
4/26/10 14:30

Acquisition information
Start time: 27-Apr-2010 20:17:56
Live time: 2700
Real time: 2701

- -

***** S U M M A R Y O F N U C L I D E S I N S A M P L E *****

Nuclide		Time of Count Activity pCi/g	Uncertainty 2 Sigma Counting pCi/g	Total pCi/g	MDA pCi/g
Ac-228	F	8.0315E-01	2.1779E-01	2.2475E-01	0.929E-01
AM-241	#A	-5.6889E-03	3.0765E-01	3.0765E-01	0.277E-01
Bi-212	F	6.8372E-01	3.5019E-01	3.5328E-01	0.211E+00
BI-214	F	7.3325E-01	1.4373E-01	1.5178E-01	0.512E-01
CO-60	#F	3.2160E-02	4.0218E-02	4.0277E-02	0.300E-01
CS-137		4.2080E-02	3.4628E-02	3.4743E-02	0.232E-01
EU-152	#B	-1.6003E-01	4.2506E-01	4.2527E-01	0.846E-01
EU-154	C	7.7662E-02	7.9783E-02	8.0053E-02	0.517E-01
K-40		8.4259E+00	1.3029E+00	1.4287E+00	0.272E+00
Pa-234	#B	-6.3437E-03	3.3163E-02	3.3168E-02	0.378E-01
Pb-210	#B	4.7279E-01	6.8395E-01	6.8496E-01	0.536E+00
Pb-212	F	7.2661E-01	1.1333E-01	1.2611E-01	0.630E-01
Pb-214		6.2981E-01	1.2567E-01	1.3357E-01	0.559E-01
RA-226		1.0079E+00	9.8239E-01	9.8534E-01	0.776E+00
Th-230	#B	1.9377E+00	6.3706E+00	6.3791E+00	0.479E+01
Th-234		2.5429E+00	1.2140E+00	1.2379E+00	0.936E+00
Tl-208	F	2.7729E-01	5.8735E-02	7.7138E-02	0.165E-01
U-235	#B	1.9287E-02	3.1351E-02	3.1385E-02	0.591E-01

- All peaks for activity calculation had bad shape.
* - Activity omitted from total
& - Activity omitted from total and all peaks had bad shape.
< - MDA value printed.
A - Activity printed, but activity < MDA.
B - Activity < MDA and failed test.
C - Area < Critical level.
F - Failed fraction or key line test.
H - Halflife limit exceeded

---------- S U M M A R Y ----------

Total Activity (36.6 to 2885.2 keV) 1.587E+01 pCi/g

Laboratory: New World Technology

ORTEC g v - i (3263) Npp32 G53W3.10 28-APR-2010 07:22:51
New World Technology Spectrum name: 1N000457.An1

Sample description
Parcel E 03-PET-166-20 374g
4/26/10 14:32

Acquisition information
Start time: 28-Apr-2010 06:35:56
Live time: 2700
Real time: 2701

- -

***** S U M M A R Y O F N U C L I D E S I N S A M P L E *****

Nuclide		Time of Count Activity pCi/g	Uncertainty Counting pCi/g	2 Sigma Total pCi/g	MDA pCi/g
Ac-228	F	6.9817E-01	2.1480E-01	2.2015E-01	0.878E-01
AM-241	#A	1.7271E-02	6.4655E-02	6.4673E-02	0.513E-01
Bi-212	#B	2.0995E-01	1.5650E-01	1.5715E-01	0.265E+00
BI-214	#F	3.5484E-01	1.5862E-01	1.6037E-01	0.787E-01
CO-60	B	1.8912E-02	3.9966E-02	3.9987E-02	0.348E-01
CS-137	#B	-7.9328E-03	2.8787E-02	2.8787E-02	0.112E-01
EU-152	#B	-1.8798E-01	6.8926E-01	6.8944E-01	0.822E-01
EU-154	C	4.5711E-02	4.6561E-02	4.6722E-02	0.438E-01
K-40		9.4040E+00	1.4189E+00	1.5625E+00	0.340E+00
Pa-234	#B	1.4416E-02	6.7588E-02	6.7600E-02	0.542E-01
Pb-210	F	7.1140E-01	7.7397E-01	7.7599E-01	0.540E+00
Pb-212		4.2699E-01	9.2488E-02	9.8036E-02	0.566E-01
Pb-214		4.4443E-01	1.2485E-01	1.2886E-01	0.664E-01
RA-226		8.7333E-01	7.8038E-01	7.8316E-01	0.609E+00
Th-230	#B	-4.3378E-01	5.1998E+00	5.2003E+00	0.279E+01
Th-234	F	1.0344E+00	1.0839E+00	1.0883E+00	0.966E+00
Tl-208	#F	2.0473E-01	4.8161E-02	6.0684E-02	0.162E-01
U-235	B	1.1083E-02	1.5557E-02	1.5580E-02	0.496E-01

- All peaks for activity calculation had bad shape.
* - Activity omitted from total
& - Activity omitted from total and all peaks had bad shape.
< - MDA value printed.
A - Activity printed, but activity < MDA.
B - Activity < MDA and failed test.
C - Area < Critical level.
F - Failed fraction or key line test.
H - Halflife limit exceeded

---------- S U M M A R Y ----------

Total Activity (36.6 to 2885.2 keV) 1.241E+01 pCi/g

Laboratory: New World Technology

ORTEC g v - i (3263) Npp32 G53W3.10 28-APR-2010 08:15:03
New World Technology Spectrum name: 1N000458.An1

Sample description
Parcel E 03-PET-166-21 372g
4/26/10 14:33

Acquisition information
Start time: 28-Apr-2010 07:24:46
Live time: 2700
Real time: 2701

- -

***** S U M M A R Y O F N U C L I D E S I N S A M P L E *****

Nuclide		Time of Count Activity pCi/g	Uncertainty Counting pCi/g	2 Sigma Total pCi/g	MDA pCi/g
Ac-228	F	1.0591E+00	2.4030E-01	2.5120E-01	0.706E-01
AM-241	#A	-2.6298E-04	3.9589E-02	3.9589E-02	0.353E-01
Bi-212	F	1.0221E+00	3.8328E-01	3.8954E-01	0.201E+00
BI-214	F	6.8968E-01	1.6185E-01	1.6822E-01	0.678E-01
CO-60	#B	1.1010E-02	2.4676E-02	2.4687E-02	0.293E-01
CS-137	B	3.5477E-03	2.7772E-02	2.7773E-02	0.236E-01
EU-152	B	-1.1437E-01	1.4689E-01	1.4721E-01	0.821E-01
EU-154	C	6.3409E-02	5.1746E-02	5.2024E-02	0.364E-01
K-40		9.4715E+00	1.4168E+00	1.5625E+00	0.336E+00
Pa-234	#B	2.5467E-02	6.6764E-02	6.6802E-02	0.689E-01
Pb-210	#	1.4083E+00	9.6543E-01	9.7177E-01	0.620E+00
Pb-212		8.7799E-01	1.2291E-01	1.3991E-01	0.582E-01
Pb-214		6.9529E-01	1.4287E-01	1.5135E-01	0.612E-01
RA-226	B	4.0534E-01	9.0068E-01	9.0120E-01	0.736E+00
Th-230	#B	2.0994E+00	5.7314E+00	5.7424E+00	0.457E+01
Th-234	#	2.7531E+00	1.3925E+00	1.4169E+00	0.986E+00
Tl-208	F	2.5919E-01	5.6226E-02	7.3117E-02	0.163E-01
U-235	B	3.8570E-02	7.4930E-02	7.4987E-02	0.508E-01

- All peaks for activity calculation had bad shape.
* - Activity omitted from total
& - Activity omitted from total and all peaks had bad shape.
< - MDA value printed.
A - Activity printed, but activity < MDA.
B - Activity < MDA and failed test.
C - Area < Critical level.
F - Failed fraction or key line test.
H - Halflife limit exceeded

---------- S U M M A R Y ----------

Total Activity (36.6 to 2885.2 keV) 1.824E+01 pCi/g

Laboratory: New World Technology

ORTEC g v - i (3263) Npp32 G53W3.10 28-APR-2010 09:19:51
New World Technology Spectrum name: 1N000459.An1

Sample description
Parcel E 03-PET-166-22 355g
4/26/10 14:39

Acquisition information
Start time: 28-Apr-2010 08:16:14
Live time: 2700
Real time: 2701

- -

***** S U M M A R Y O F N U C L I D E S I N S A M P L E *****

Nuclide		Time of Count Activity pCi/g	Uncertainty 2 Sigma Counting pCi/g	Total pCi/g	MDA pCi/g
Ac-228	F	1.6930E-01	9.1322E-02	9.2068E-02	0.127E+00
AM-241	#A	-7.8689E-06	3.1855E-02	3.1855E-02	0.299E-01
Bi-212	F	4.0264E-01	2.9273E-01	2.9401E-01	0.191E+00
BI-214	F	2.1242E-01	1.3194E-01	1.3269E-01	0.637E-01
CO-60	#B	-1.6829E-02	6.1753E-02	6.1764E-02	0.286E-01
CS-137	B	2.6264E-02	3.6527E-02	3.6570E-02	0.275E-01
EU-152	B	-2.5534E-01	2.4799E+01	2.4799E+01	0.853E-01
EU-154	C	5.0941E-02	6.4167E-02	6.4312E-02	0.374E-01
K-40	#	3.1454E+00	7.5918E-01	7.9009E-01	0.154E+00
Pa-234	#B	-2.5456E-02	1.0183E+00	1.0183E+00	0.325E-01
Pb-210	#	7.0007E-01	6.7740E-01	6.7963E-01	0.473E+00
Pb-212	F	1.7675E-01	6.9236E-02	7.0531E-02	0.545E-01
Pb-214	F	2.3598E-01	8.4046E-02	8.5739E-02	0.531E-01
RA-226	B	2.7417E-01	7.7210E-01	7.7238E-01	0.638E+00
Th-230	#B	-1.2860E+00	2.7800E+01	2.7801E+01	0.198E+01
Th-234	B	8.4342E-01	9.4008E-01	9.4349E-01	0.877E+00
Tl-208	#F	1.1287E-01	3.8876E-02	4.3882E-02	0.171E-01
U-235	B	3.3579E-02	4.1463E-02	4.1541E-02	0.454E-01

- All peaks for activity calculation had bad shape.
* - Activity omitted from total
& - Activity omitted from total and all peaks had bad shape.
< - MDA value printed.
A - Activity printed, but activity < MDA.
B - Activity < MDA and failed test.
C - Area < Critical level.
F - Failed fraction or key line test.
H - Halflife limit exceeded

---------- S U M M A R Y ----------

Total Activity (36.6 to 2885.2 keV) 4.986E+00 pCi/g

Laboratory: New World Technology

ORTEC g v - i (3263) Npp32 G53W3.10 28-APR-2010 09:23:52
New World Technology Spectrum name: 2N000288.An1

Sample description
Parcel E 03-PET-166-23 330g
4/26/10 11:39

Acquisition information
Start time: 28-Apr-2010 08:19:48
Live time: 2700
Real time: 2704

- -

***** S U M M A R Y O F N U C L I D E S I N S A M P L E *****

Nuclide		Time of Count Activity pCi/g	Uncertainty Counting pCi/g	2 Sigma Total pCi/g	MDA pCi/g
Ac-228	F	4.5853E-01	1.7371E-01	1.7658E-01	0.146E+00
AM-241		4.8159E-01	4.6479E-01	4.6677E-01	0.322E+00
Bi-212	B	2.3808E-01	4.0093E-01	4.0126E-01	0.324E+00
BI-214	F	3.3591E-01	1.4030E-01	1.4207E-01	0.114E+00
CO-60	#B	-2.8944E-02	1.5928E-01	1.5929E-01	0.329E-01
CS-137		8.3172E-02	5.3268E-02	5.3561E-02	0.357E-01
EU-152	#B	-2.2007E-01	2.5140E-01	2.5209E-01	0.153E+00
EU-154	F	1.6086E-01	1.2176E-01	1.2252E-01	0.804E-01
K-40		6.3687E+00	1.5160E+00	1.5794E+00	0.127E+01
Pa-234	F	1.7379E-01	1.0837E-01	1.0943E-01	0.131E+00
Pb-210	#F	0.0000E+00	2.3423E+00	2.3423E+00	0.000E+00
Pb-212		4.6665E-01	1.2434E-01	1.2932E-01	0.839E-01
PB-214	F	2.9633E-01	1.8603E-01	1.8724E-01	0.114E+00
RA-226	B	7.0119E-01	1.2867E+00	1.2878E+00	0.104E+01
Th-230	#B	-1.5483E+00	8.0332E+00	8.0375E+00	0.621E+01
Th-234	B	8.8407E-01	1.6182E+00	1.6204E+00	0.136E+01
Tl-208	F	2.8972E-01	8.0445E-02	8.2702E-02	0.413E-01
U-235	F	8.2636E-02	1.0154E-01	1.0173E-01	0.664E-01

- All peaks for activity calculation had bad shape.
* - Activity omitted from total
& - Activity omitted from total and all peaks had bad shape.
< - MDA value printed.
A - Activity printed, but activity < MDA.
B - Activity < MDA and failed test.
C - Area < Critical level.
F - Failed fraction or key line test.
H - Halflife limit exceeded

---------- S U M M A R Y ----------

Total Activity (32.4 to 2597.5 keV) 8.781E+00 pCi/g

Laboratory: New World Technology

ORTEC g v - i (3263) Npp32 G53W3.10 28-APR-2010 10:08:18
New World Technology Spectrum name: 1N000460.An1

Sample description
Parcel E 03-PET-166-24 345g
4/26/10 12:38

Acquisition information
Start time: 28-Apr-2010 09:21:02
Live time: 2700
Real time: 2701

- -

***** S U M M A R Y O F N U C L I D E S I N S A M P L E *****

Nuclide		Time of Count Activity pCi/g	Uncertainty 2 Sigma Counting pCi/g	Total pCi/g	MDA pCi/g
Ac-228	F	5.8515E-01	1.9397E-01	1.9814E-01	0.123E+00
AM-241	A	4.7686E-03	6.6033E-02	6.6034E-02	0.546E-01
Bi-212	B	3.0714E-01	4.0813E-01	4.0867E-01	0.312E+00
BI-214	F	3.3200E-01	1.2124E-01	1.2324E-01	0.587E-01
CO-60	#B	-2.9702E-02	2.0108E-01	2.0109E-01	0.294E-01
CS-137	F	2.8670E-02	3.1012E-02	3.1072E-02	0.219E-01
EU-152	B	-1.9439E-01	6.8047E-01	6.8067E-01	0.858E-01
EU-154	C	8.2798E-02	5.1451E-02	5.1927E-02	0.446E-01
K-40		5.4675E+00	1.0958E+00	1.1599E+00	0.269E+00
Pa-234	#B	-3.5055E-02	2.4129E-01	2.4131E-01	0.386E-01
Pb-210		9.2371E-01	6.8732E-01	6.9116E-01	0.494E+00
Pb-212	F	4.5995E-01	9.4293E-02	1.0059E-01	0.512E-01
Pb-214		3.9235E-01	1.4419E-01	1.4692E-01	0.698E-01
RA-226	F	7.1545E-01	7.9249E-01	7.9433E-01	0.628E+00
Th-230	B	2.8775E+00	5.6714E+00	5.6923E+00	0.458E+01
Th-234	#	2.3428E+00	1.3174E+00	1.3361E+00	0.960E+00
Tl-208	F	1.7301E-01	4.7980E-02	5.7232E-02	0.176E-01
U-235	#B	5.0798E-02	3.7199E-02	3.7397E-02	0.522E-01

- All peaks for activity calculation had bad shape.
* - Activity omitted from total
& - Activity omitted from total and all peaks had bad shape.
< - MDA value printed.
A - Activity printed, but activity < MDA.
B - Activity < MDA and failed test.
C - Area < Critical level.
F - Failed fraction or key line test.
H - Halflife limit exceeded

---------- S U M M A R Y ----------

Total Activity (36.6 to 2885.2 keV) 1.068E+01 pCi/g

Laboratory: New World Technology

Tetra Tech EC, Inc.

Client Sample ID: 03-PET-166-10

Radiochemistry

Lab Sample ID: F0D300486-001
Work Order: L0R8C
Matrix: SOLID

Date Collected: 04/26/10 1145
Date Received: 04/30/10 0915

Parameter	Result	Qual	Total Uncert. (2 σ+/-)	RL	MDL	Count Time	Prep Date	Analysis Date
Total SR BY GFPC	**EPA-905 MOD**			**pCi/g**		**Batch # 0126426**		**Yld % 79**
Strontium Total	-0.07	U	0.17	0.32	0.18	200	05/06/10	05/11/10

NOTE(S)

Data are incomplete without the case narrative.
Bold results are greater than the MDL.

U Result is less than the sample detection limit.

The MDL is an estimate of the measured concentration at which there is a 99% confidence that a given analyte is given sample matrix. This is functionally analogous to the "critical value" or the "limit of detection".

Ra-226 results analyzed by EPA 901.1 MOD were calculated and reported from the 46.09 percent abundant 609.31 KeV line of Bi-214.

Tetra Tech EC, Inc.

Client Sample ID: 03-PET-166-10 DUP

Radiochemistry

Lab Sample ID: F0D300486-001X
Work Order: L0R8C
Matrix: SOLID

Date Collected: 04/26/10 1145
Date Received: 04/30/10 0915

Parameter	Result	Qual	Total Uncert. (2 σ+/-)	RL	MDL	Count Time	Prep Date	Analysis Date
Total SR BY GFPC	**EPA-905 MOD**			**pCi/g**		**Batch # 0126426**		**Yld % 78**
Strontium Total	-0.02	U	0.16	0.32	0.17	200	05/06/10	05/11/10

NOTE(S)

Data are incomplete without the case narrative.
Bold results are greater than the MDL.

U Result is less than the sample detection limit.

The MDL is an estimate of the measured concentration at which there is a 99% confidence that a given analyte is given sample matrix. This is functionally analogous to the "critical value" or the "limit of detection".

Ra-226 results analyzed by EPA 901.1 MOD were calculated and reported from the 46.09 percent abundant 609.31 KeV line of Bi-214.

Tetra Tech EC, Inc.

Client Sample ID: 03-PET-166-12

Radiochemistry

Lab Sample ID: F0D300486-002
Work Order: L0R8D
Matrix: SOLID

Date Collected: 04/26/10 1115
Date Received: 04/30/10 0915

Parameter	Result	Qual	Total Uncert. (2 σ+/-)	RL	MDL	Count Time	Prep Date	Analysis Date
Total SR BY GFPC	**EPA-905 MOD**			**pCi/g**		**Batch # 0126426**		**Yld % 85**
Strontium Total	0.1	U	0.16	0.32	0.16	200	05/06/10	05/11/10

NOTE(S)

Data are incomplete without the case narrative.
Bold results are greater than the MDL.

U Result is less than the sample detection limit.

The MDL is an estimate of the measured concentration at which there is a 99% confidence that a given analyte is given sample matrix. This is functionally analogous to the "critical value" or the "limit of detection".

Ra-226 results analyzed by EPA 901.1 MOD were calculated and reported from the 46.09 percent abundant 609.31 KeV line of Bi-214.

ATTACHMENT 3

QUALITY ASSURANCE SAMPLE RESULTS
(on CD only)

This page intentionally left blank.

Tetra Tech EC, Inc.

Client Sample ID: 03-PET-166-06

Radiochemistry

Lab Sample ID: F0D300484-001
Work Order: L0R77
Matrix: SOLID

Date Collected: 04/26/10 1407
Date Received: 04/30/10 0915

Parameter	Result	Qual	Total Uncert. (2 σ+/-)	RL	MDL	Count Time	Prep Date	Analysis Date
Gamma Ra-226 & hits by EPA 901.1 MOD				pCi/g		Batch # 0120352		Yld %
Actinium 228	**1.06**		0.23		0.13	30	04/30/10	05/21/10
Americium 241	0.04	U	0.11		0.09	30	04/30/10	05/21/10
Bismuth 212	**0.57**		0.46		0.29	30	04/30/10	05/21/10
Bismuth 214	**0.77**		0.18		0.04	30	04/30/10	05/21/10
Cesium 137	0.019	U	0.054	0.070	0.042	30	04/30/10	05/21/10
Cobalt 60	0.003	U	0.057		0.046	30	04/30/10	05/21/10
Europium 152	-0.05	U	0.14		0.11	30	04/30/10	05/21/10
Europium 154	0.0	U	0.080		0.093	30	04/30/10	05/21/10
Lead 210	0.7	U	1.1	1.5	1	30	04/30/10	05/21/10
Lead 212	**1.06**		0.23		0.08	30	04/30/10	05/21/10
Lead 214	**0.91**		0.18		0.07	30	04/30/10	05/21/10
Potassium 40	**8.7**		1.8		0.7	30	04/30/10	05/21/10
Protactinium 234	-0.10	U	0.17		0.14	30	04/30/10	05/21/10
Radium (226)	**0.77**		0.18	0.70	0.04	30	04/30/10	05/21/10
Thallium 208	**0.358**		0.095		0.027	30	04/30/10	05/21/10
Thorium 232	**1.06**		0.23		0.13	30	04/30/10	05/21/10
Thorium 234	0.5	U	1.2		1.0	30	04/30/10	05/21/10
Uranium 235	0.17	U	0.23		0.18	30	04/30/10	05/21/10

NOTE(S)

Data are incomplete without the case narrative.
Bold results are greater than the MDL.

U Result is less than the sample detection limit.

The MDL is an estimate of the measured concentration at which there is a 99% confidence that a given analyte is given sample matrix. This is functionally analogous to the "critical value" or the "limit of detection".

Ra-226 results analyzed by EPA 901.1 MOD were calculated and reported from the 46.09 percent abundant 609.31 KeV line of Bi-214.

Tetra Tech EC, Inc.

Client Sample ID: 03-PET-166-06 DUP

Radiochemistry

Lab Sample ID: F0D300484-001X
Work Order: L0R77
Matrix: SOLID

Date Collected: 04/26/10 1407
Date Received: 04/30/10 0915

Parameter	Result	Qual	Total Uncert. (2 σ+/-)	RL	MDL	Count Time	Prep Date	Analysis Date
Gamma Ra-226 & hits by EPA 901.1 MOD				pCi/g		Batch # 0120352		Yld %
Actinium 228	**1.11**		0.22		**0.06**	30	**04/30/10**	**05/21/10**
Americium 241	0.064	U	0.091		0.070	30	04/30/10	05/21/10
Bismuth 212	0.0	U	0.40		0.33	30	04/30/10	05/21/10
Bismuth 214	**0.87**		0.18		**0.05**	30	**04/30/10**	**05/21/10**
Cesium 137	-0.012	U	0.055	0.070	0.044	30	04/30/10	05/21/10
Cobalt 60	0.0	U	0.058		0.048	30	04/30/10	05/21/10
Europium 152	0.04	U	0.14		0.11	30	04/30/10	05/21/10
Europium 154	0.02	U	0.38		0.31	30	04/30/10	05/21/10
Lead 210	**1.5**	J	1.2	1.5	**0.8**	30	**04/30/10**	**05/21/10**
Lead 212	**1.20**		0.19		**0.07**	30	**04/30/10**	**05/21/10**
Lead 214	**0.86**		0.18		**0.07**	30	**04/30/10**	**05/21/10**
Potassium 40	**8.9**		1.5		**0.2**	30	**04/30/10**	**05/21/10**
Protactinium 234	-0.10	U	0.22		0.17	30	04/30/10	05/21/10
Radium (226)	**0.87**		0.18	0.70	**0.05**	30	**04/30/10**	**05/21/10**
Thallium 208	**0.337**		0.091		**0.036**	30	**04/30/10**	**05/21/10**
Thorium 232	**1.11**		0.22		**0.06**	30	**04/30/10**	**05/21/10**
Thorium 234	1.18	U	0.70		1.2	30	04/30/10	05/21/10
Uranium 235	0.03	U	0.33		0.27	30	04/30/10	05/21/10

NOTE(S)

Data are incomplete without the case narrative.
Bold results are greater than the MDL.

J Result is greater than sample detection limit but less than stated reporting limit.
U Result is less than the sample detection limit.

The MDL is an estimate of the measured concentration at which there is a 99% confidence that a given analyte is given sample matrix. This is functionally analogous to the "critical value" or the "limit of detection".

Ra-226 results analyzed by EPA 901.1 MOD were calculated and reported from the 46.09 percent abundant 609.31 KeV line of Bi-214.

Tetra Tech EC, Inc.

Client Sample ID: 03-PET-166-16

Radiochemistry

Lab Sample ID: F0D300484-002
Work Order: L0R78
Matrix: SOLID

Date Collected: 04/26/10 1244
Date Received: 04/30/10 0915

Parameter	Result	Qual	Total Uncert. (2 σ+/-)	RL	MDL	Count Time	Prep Date	Analysis Date
Gamma Ra-226 & hits by EPA 901.1 MOD			pCi/g			Batch # 0120352		Yld %
Actinium 228	0.38		0.17		0.13	30	04/30/10	05/21/10
Americium 241	0.11		0.12		0.09	30	04/30/10	05/21/10
Bismuth 212	0.0	U	0.71		0.59	30	04/30/10	05/21/10
Bismuth 214	0.55		0.18		0.08	30	04/30/10	05/21/10
Cesium 137	-0.006	U	0.083	0.070	0.061	30	04/30/10	05/21/10
Cobalt 60	0.016	U	0.077		0.069	30	04/30/10	05/21/10
Europium 152	-0.01	U	0.13		0.10	30	04/30/10	05/21/10
Europium 154	-0.12	U	0.54		0.43	30	04/30/10	05/21/10
Lead 210	0.7	U	1.6	1.5	1.3	30	04/30/10	05/21/10
Lead 212	0.57		0.13		0.05	30	04/30/10	05/21/10
Lead 214	0.57		0.14		0.04	30	04/30/10	05/21/10
Potassium 40	2.7		1.2		0.6	30	04/30/10	05/21/10
Protactinium 234	-0.05	U	0.15		0.12	30	04/30/10	05/21/10
Radium (226)	0.55	J	0.18	0.70	0.08	30	04/30/10	05/21/10
Thallium 208	0.332		0.087		0.013	30	04/30/10	05/21/10
Thorium 232	0.38		0.17		0.13	30	04/30/10	05/21/10
Thorium 234	0.1	U	1.3		1.1	30	04/30/10	05/21/10
Uranium 235	-0.002	U	0.20		0.17	30	04/30/10	05/21/10

NOTE(S)

Data are incomplete without the case narrative.
Bold results are greater than the MDL.

J Result is greater than sample detection limit but less than stated reporting limit.
U Result is less than the sample detection limit.

The MDL is an estimate of the measured concentration at which there is a 99% confidence that a given analyte is given sample matrix. This is functionally analogous to the "critical value" or the "limit of detection".

Ra-226 results analyzed by EPA 901.1 MOD were calculated and reported from the 46.09 percent abundant 609.31 KeV line of Bi-214.

ATTACHMENT 4

BACKFILL MATERIAL
RESRAD REPORT
(on CD only)

This page intentionally left blank.

Table of Contents

Part I: Mixture Sums and Single Radionuclide Guidelines

Dose Conversion Factor (and Related) Parameter Summary ... 2
Site-Specific Parameter Summary 4
Summary of Pathway Selections 8
Contaminated Zone and Total Dose Summary 9
Total Dose Components
Time = 0.000E+00 10
Time = 1.000E+00 11
Time = 3.000E+00 12
Time = 1.000E+01 13
Time = 3.000E+01 14
Time = 1.000E+02 15
Time = 3.000E+02 16
Time = 1.000E+03 17
Dose/Source Ratios Summed Over All Pathways 18
Single Radionuclide Soil Guidelines 18
Dose Per Nuclide Summed Over All Pathways 19
Soil Concentration Per Nuclide 19

Dose Conversion Factor (and Related) Parameter Summary
Dose Library: FGR 12 & FGR 11

Menu	Parameter	Current Value#	Base Case*	Parameter Name
A-1	DCF's for external ground radiation, (mrem/yr)/(pCi/g)			
A-1	At-218 (Source: FGR 12)	5.847E-03	5.847E-03	DCF1(1)
A-1	Ba-137m (Source: FGR 12)	3.606E+00	3.606E+00	DCF1(2)
A-1	Bi-210 (Source: FGR 12)	3.606E-03	3.606E-03	DCF1(3)
A-1	Bi-214 (Source: FGR 12)	9.808E+00	9.808E+00	DCF1(4)
A-1	Cs-137 (Source: FGR 12)	7.510E-04	7.510E-04	DCF1(5)
A-1	Pb-210 (Source: FGR 12)	2.447E-03	2.447E-03	DCF1(6)
A-1	Pb-214 (Source: FGR 12)	1.341E+00	1.341E+00	DCF1(7)
A-1	Po-210 (Source: FGR 12)	5.231E-05	5.231E-05	DCF1(8)
A-1	Po-214 (Source: FGR 12)	5.138E-04	5.138E-04	DCF1(9)
A-1	Po-218 (Source: FGR 12)	5.642E-05	5.642E-05	DCF1(10)
A-1	Ra-226 (Source: FGR 12)	3.176E-02	3.176E-02	DCF1(11)
A-1	Rn-222 (Source: FGR 12)	2.354E-03	2.354E-03	DCF1(12)
A-1	Sr-90 (Source: FGR 12)	7.043E-04	7.043E-04	DCF1(13)
A-1	Tl-210 (Source: no data)	0.000E+00	-2.000E+00	DCF1(14)
A-1	Y-90 (Source: FGR 12)	2.391E-02	2.391E-02	DCF1(15)
B-1	Dose conversion factors for inhalation, mrem/pCi:			
B-1	Cs-137+D	3.190E-05	3.190E-05	DCF2(1)
B-1	Pb-210+D	2.320E-02	1.360E-02	DCF2(2)
B-1	Ra-226+D	8.594E-03	8.580E-03	DCF2(3)
B-1	Sr-90+D	1.308E-03	1.300E-03	DCF2(4)
D-1	Dose conversion factors for ingestion, mrem/pCi:			
D-1	Cs-137+D	5.000E-05	5.000E-05	DCF3(1)
D-1	Pb-210+D	7.276E-03	5.370E-03	DCF3(2)
D-1	Ra-226+D	1.321E-03	1.320E-03	DCF3(3)
D-1	Sr-90+D	1.528E-04	1.420E-04	DCF3(4)
D-34	Food transfer factors:			
D-34	Cs-137+D , plant/soil concentration ratio, dimensionless	4.000E-02	4.000E-02	RTF(1,1)
D-34	Cs-137+D , beef/livestock-intake ratio, (pCi/kg)/(pCi/d)	3.000E-02	3.000E-02	RTF(1,2)
D-34	Cs-137+D , milk/livestock-intake ratio, (pCi/L)/(pCi/d)	8.000E-03	8.000E-03	RTF(1,3)
D-34				
D-34	Pb-210+D , plant/soil concentration ratio, dimensionless	1.000E-02	1.000E-02	RTF(2,1)
D-34	Pb-210+D , beef/livestock-intake ratio, (pCi/kg)/(pCi/d)	8.000E-04	8.000E-04	RTF(2,2)
D-34	Pb-210+D , milk/livestock-intake ratio, (pCi/L)/(pCi/d)	3.000E-04	3.000E-04	RTF(2,3)
D-34				
D-34	Ra-226+D , plant/soil concentration ratio, dimensionless	4.000E-02	4.000E-02	RTF(3,1)
D-34	Ra-226+D , beef/livestock-intake ratio, (pCi/kg)/(pCi/d)	1.000E-03	1.000E-03	RTF(3,2)
D-34	Ra-226+D , milk/livestock-intake ratio, (pCi/L)/(pCi/d)	1.000E-03	1.000E-03	RTF(3,3)
D-34				
D-34	Sr-90+D , plant/soil concentration ratio, dimensionless	3.000E-01	3.000E-01	RTF(4,1)
D-34	Sr-90+D , beef/livestock-intake ratio, (pCi/kg)/(pCi/d)	8.000E-03	8.000E-03	RTF(4,2)
D-34	Sr-90+D , milk/livestock-intake ratio, (pCi/L)/(pCi/d)	2.000E-03	2.000E-03	RTF(4,3)
D-5	Bioaccumulation factors, fresh water, L/kg:			
D-5	Cs-137+D , fish	2.000E+03	2.000E+03	BIOFAC(1,1)
D-5	Cs-137+D , crustacea and mollusks	1.000E+02	1.000E+02	BIOFAC(1,2)
D-5				

Dose Conversion Factor (and Related) Parameter Summary (continued)
Dose Library: FGR 12 & FGR 11

Menu	Parameter	Current Value#	Base Case*	Parameter Name
D-5	Pb-210+D , fish	3.000E+02	3.000E+02	BIOFAC(2,1)
D-5	Pb-210+D , crustacea and mollusks	1.000E+02	1.000E+02	BIOFAC(2,2)
D-5				
D-5	Ra-226+D , fish	5.000E+01	5.000E+01	BIOFAC(3,1)
D-5	Ra-226+D , crustacea and mollusks	2.500E+02	2.500E+02	BIOFAC(3,2)
D-5				
D-5	Sr-90+D , fish	6.000E+01	6.000E+01	BIOFAC(4,1)
D-5	Sr-90+D , crustacea and mollusks	1.000E+02	1.000E+02	BIOFAC(4,2)

#For DCF1(xxx) only, factors are for infinite depth & area. See ETFG table in Ground Pathway of Detailed Report.
*Base Case means Default.Lib w/o Associate Nuclide contributions.

Site-Specific Parameter Summary

Menu	Parameter	User Input	Default	Used by RESRAD (If different from user input)	Parameter Name
R011	Area of contaminated zone (m**2)	2.550E+02	1.000E+04	---	AREA
R011	Thickness of contaminated zone (m)	2.000E+00	2.000E+00	---	THICK0
R011	Fraction of contamination that is submerged	0.000E+00	0.000E+00	---	SUBMFRACT
R011	Length parallel to aquifer flow (m)	1.000E+02	1.000E+02	---	LCZPAQ
R011	Basic radiation dose limit (mrem/yr)	2.500E+01	3.000E+01	---	BRDL
R011	Time since placement of material (yr)	0.000E+00	0.000E+00	---	TI
R011	Times for calculations (yr)	1.000E+00	1.000E+00	---	T(2)
R011	Times for calculations (yr)	3.000E+00	3.000E+00	---	T(3)
R011	Times for calculations (yr)	1.000E+01	1.000E+01	---	T(4)
R011	Times for calculations (yr)	3.000E+01	3.000E+01	---	T(5)
R011	Times for calculations (yr)	1.000E+02	1.000E+02	---	T(6)
R011	Times for calculations (yr)	3.000E+02	3.000E+02	---	T(7)
R011	Times for calculations (yr)	1.000E+03	1.000E+03	---	T(8)
R011	Times for calculations (yr)	not used	0.000E+00	---	T(9)
R011	Times for calculations (yr)	not used	0.000E+00	---	T(10)
R012	Initial principal radionuclide (pCi/g): Cs-137	5.300E-02	0.000E+00	---	S1(1)
R012	Initial principal radionuclide (pCi/g): Pb-210	3.730E-01	0.000E+00	---	S1(2)
R012	Initial principal radionuclide (pCi/g): Ra-226	3.730E-01	0.000E+00	---	S1(3)
R012	Initial principal radionuclide (pCi/g): Sr-90	7.000E-02	0.000E+00	---	S1(4)
R012	Concentration in groundwater (pCi/L): Cs-137	not used	0.000E+00	---	W1(1)
R012	Concentration in groundwater (pCi/L): Pb-210	not used	0.000E+00	---	W1(2)
R012	Concentration in groundwater (pCi/L): Ra-226	not used	0.000E+00	---	W1(3)
R012	Concentration in groundwater (pCi/L): Sr-90	not used	0.000E+00	---	W1(4)
R013	Cover depth (m)	0.000E+00	0.000E+00	---	COVER0
R013	Density of cover material (g/cm**3)	not used	1.500E+00	---	DENSCV
R013	Cover depth erosion rate (m/yr)	not used	1.000E-03	---	VCV
R013	Density of contaminated zone (g/cm**3)	1.500E+00	1.500E+00	---	DENSCZ
R013	Contaminated zone erosion rate (m/yr)	1.000E-03	1.000E-03	---	VCZ
R013	Contaminated zone total porosity	4.000E-01	4.000E-01	---	TPCZ
R013	Contaminated zone field capacity	2.000E-01	2.000E-01	---	FCCZ
R013	Contaminated zone hydraulic conductivity (m/yr)	1.000E+01	1.000E+01	---	HCCZ
R013	Contaminated zone b parameter	5.300E+00	5.300E+00	---	BCZ
R013	Average annual wind speed (m/sec)	2.000E+00	2.000E+00	---	WIND
R013	Humidity in air (g/m**3)	not used	8.000E+00	---	HUMID
R013	Evapotranspiration coefficient	5.000E-01	5.000E-01	---	EVAPTR
R013	Precipitation (m/yr)	1.000E+00	1.000E+00	---	PRECIP
R013	Irrigation (m/yr)	2.000E-01	2.000E-01	---	RI
R013	Irrigation mode	overhead	overhead	---	IDITCH
R013	Runoff coefficient	2.000E-01	2.000E-01	---	RUNOFF
R013	Watershed area for nearby stream or pond (m**2)	1.000E+06	1.000E+06	---	WAREA
R013	Accuracy for water/soil computations	1.000E-03	1.000E-03	---	EPS
R014	Density of saturated zone (g/cm**3)	1.500E+00	1.500E+00	---	DENSAQ
R014	Saturated zone total porosity	4.000E-01	4.000E-01	---	TPSZ
R014	Saturated zone effective porosity	2.000E-01	2.000E-01	---	EPSZ
R014	Saturated zone field capacity	2.000E-01	2.000E-01	---	FCSZ
R014	Saturated zone hydraulic conductivity (m/yr)	1.000E+02	1.000E+02	---	HCSZ
R014	Saturated zone hydraulic gradient	2.000E-02	2.000E-02	---	HGWT

Site-Specific Parameter Summary (continued)

Menu	Parameter	User Input	Default	Used by RESRAD (If different from user input)	Parameter Name
R014	Saturated zone b parameter	5.300E+00	5.300E+00	---	BSZ
R014	Water table drop rate (m/yr)	1.000E-03	1.000E-03	---	VWT
R014	Well pump intake depth (m below water table)	1.000E+01	1.000E+01	---	DWIBWT
R014	Model: Nondispersion (ND) or Mass-Balance (MB)	ND	ND	---	MODEL
R014	Well pumping rate (m**3/yr)	2.500E+02	2.500E+02	---	UW
R015	Number of unsaturated zone strata	1	1	---	NS
R015	Unsat. zone 1, thickness (m)	4.000E+00	4.000E+00	---	H(1)
R015	Unsat. zone 1, soil density (g/cm**3)	1.500E+00	1.500E+00	---	DENSUZ(1)
R015	Unsat. zone 1, total porosity	4.000E-01	4.000E-01	---	TPUZ(1)
R015	Unsat. zone 1, effective porosity	2.000E-01	2.000E-01	---	EPUZ(1)
R015	Unsat. zone 1, field capacity	2.000E-01	2.000E-01	---	FCUZ(1)
R015	Unsat. zone 1, soil-specific b parameter	5.300E+00	5.300E+00	---	BUZ(1)
R015	Unsat. zone 1, hydraulic conductivity (m/yr)	1.000E+01	1.000E+01	---	HCUZ(1)
R016	Distribution coefficients for Cs-137				
R016	Contaminated zone (cm**3/g)	4.600E+03	4.600E+03	---	DCNUCC(1)
R016	Unsaturated zone 1 (cm**3/g)	4.600E+03	4.600E+03	---	DCNUCU(1,1)
R016	Saturated zone (cm**3/g)	4.600E+03	4.600E+03	---	DCNUCS(1)
R016	Leach rate (/yr)	0.000E+00	0.000E+00	3.623E-05	ALEACH(1)
R016	Solubility constant	0.000E+00	0.000E+00	not used	SOLUBK(1)
R016	Distribution coefficients for Pb-210				
R016	Contaminated zone (cm**3/g)	1.000E+02	1.000E+02	---	DCNUCC(2)
R016	Unsaturated zone 1 (cm**3/g)	1.000E+02	1.000E+02	---	DCNUCU(2,1)
R016	Saturated zone (cm**3/g)	1.000E+02	1.000E+02	---	DCNUCS(2)
R016	Leach rate (/yr)	0.000E+00	0.000E+00	1.663E-03	ALEACH(2)
R016	Solubility constant	0.000E+00	0.000E+00	not used	SOLUBK(2)
R016	Distribution coefficients for Ra-226				
R016	Contaminated zone (cm**3/g)	7.000E+01	7.000E+01	---	DCNUCC(3)
R016	Unsaturated zone 1 (cm**3/g)	7.000E+01	7.000E+01	---	DCNUCU(3,1)
R016	Saturated zone (cm**3/g)	7.000E+01	7.000E+01	---	DCNUCS(3)
R016	Leach rate (/yr)	0.000E+00	0.000E+00	2.374E-03	ALEACH(3)
R016	Solubility constant	0.000E+00	0.000E+00	not used	SOLUBK(3)
R016	Distribution coefficients for Sr-90				
R016	Contaminated zone (cm**3/g)	3.000E+01	3.000E+01	---	DCNUCC(4)
R016	Unsaturated zone 1 (cm**3/g)	3.000E+01	3.000E+01	---	DCNUCU(4,1)
R016	Saturated zone (cm**3/g)	3.000E+01	3.000E+01	---	DCNUCS(4)
R016	Leach rate (/yr)	0.000E+00	0.000E+00	5.516E-03	ALEACH(4)
R016	Solubility constant	0.000E+00	0.000E+00	not used	SOLUBK(4)
R017	Inhalation rate (m**3/yr)	8.400E+03	8.400E+03	---	INHALR
R017	Mass loading for inhalation (g/m**3)	1.000E-04	1.000E-04	---	MLINH
R017	Exposure duration	3.000E+01	3.000E+01	---	ED
R017	Shielding factor, inhalation	4.000E-01	4.000E-01	---	SHF3
R017	Shielding factor, external gamma	7.000E-01	7.000E-01	---	SHF1
R017	Fraction of time spent indoors	5.000E-01	5.000E-01	---	FIND
R017	Fraction of time spent outdoors (on site)	2.500E-01	2.500E-01	---	FOTD

Site-Specific Parameter Summary (continued)

Menu	Parameter	User Input	Default	Used by RESRAD (If different from user input)	Parameter Name
R017	Shape factor flag, external gamma	1.000E+00	1.000E+00	>0 shows circular AREA.	FS
R017	Radii of shape factor array (used if FS = -1):				
R017	Outer annular radius (m), ring 1:	not used	5.000E+01	---	RAD_SHAPE(1)
R017	Outer annular radius (m), ring 2:	not used	7.071E+01	---	RAD_SHAPE(2)
R017	Outer annular radius (m), ring 3:	not used	0.000E+00	---	RAD_SHAPE(3)
R017	Outer annular radius (m), ring 4:	not used	0.000E+00	---	RAD_SHAPE(4)
R017	Outer annular radius (m), ring 5:	not used	0.000E+00	---	RAD_SHAPE(5)
R017	Outer annular radius (m), ring 6:	not used	0.000E+00	---	RAD_SHAPE(6)
R017	Outer annular radius (m), ring 7:	not used	0.000E+00	---	RAD_SHAPE(7)
R017	Outer annular radius (m), ring 8:	not used	0.000E+00	---	RAD_SHAPE(8)
R017	Outer annular radius (m), ring 9:	not used	0.000E+00	---	RAD_SHAPE(9)
R017	Outer annular radius (m), ring 10:	not used	0.000E+00	---	RAD_SHAPE(10)
R017	Outer annular radius (m), ring 11:	not used	0.000E+00	---	RAD_SHAPE(11)
R017	Outer annular radius (m), ring 12:	not used	0.000E+00	---	RAD_SHAPE(12)
R017	Fractions of annular areas within AREA:				
R017	Ring 1	not used	1.000E+00	---	FRACA(1)
R017	Ring 2	not used	2.732E-01	---	FRACA(2)
R017	Ring 3	not used	0.000E+00	---	FRACA(3)
R017	Ring 4	not used	0.000E+00	---	FRACA(4)
R017	Ring 5	not used	0.000E+00	---	FRACA(5)
R017	Ring 6	not used	0.000E+00	---	FRACA(6)
R017	Ring 7	not used	0.000E+00	---	FRACA(7)
R017	Ring 8	not used	0.000E+00	---	FRACA(8)
R017	Ring 9	not used	0.000E+00	---	FRACA(9)
R017	Ring 10	not used	0.000E+00	---	FRACA(10)
R017	Ring 11	not used	0.000E+00	---	FRACA(11)
R017	Ring 12	not used	0.000E+00	---	FRACA(12)
R018	Fruits, vegetables and grain consumption (kg/yr)	1.600E+02	1.600E+02	---	DIET(1)
R018	Leafy vegetable consumption (kg/yr)	1.400E+01	1.400E+01	---	DIET(2)
R018	Milk consumption (L/yr)	9.200E+01	9.200E+01	---	DIET(3)
R018	Meat and poultry consumption (kg/yr)	6.300E+01	6.300E+01	---	DIET(4)
R018	Fish consumption (kg/yr)	5.400E+00	5.400E+00	---	DIET(5)
R018	Other seafood consumption (kg/yr)	9.000E-01	9.000E-01	---	DIET(6)
R018	Soil ingestion rate (g/yr)	3.650E+01	3.650E+01	---	SOIL
R018	Drinking water intake (L/yr)	5.100E+02	5.100E+02	---	DWI
R018	Contamination fraction of drinking water	1.000E+00	1.000E+00	---	FDW
R018	Contamination fraction of household water	not used	1.000E+00	---	FHHW
R018	Contamination fraction of livestock water	1.000E+00	1.000E+00	---	FLW
R018	Contamination fraction of irrigation water	1.000E+00	1.000E+00	---	FIRW
R018	Contamination fraction of aquatic food	5.000E-01	5.000E-01	---	FR9
R018	Contamination fraction of plant food	-1	-1	0.128E+00	FPLANT
R018	Contamination fraction of meat	-1	-1	0.127E-01	FMEAT
R018	Contamination fraction of milk	-1	-1	0.127E-01	FMILK
R019	Livestock fodder intake for meat (kg/day)	6.800E+01	6.800E+01	---	LFI5
R019	Livestock fodder intake for milk (kg/day)	5.500E+01	5.500E+01	---	LFI6
R019	Livestock water intake for meat (L/day)	5.000E+01	5.000E+01	---	LWI5
R019	Livestock water intake for milk (L/day)	1.600E+02	1.600E+02	---	LWI6

Site-Specific Parameter Summary (continued)

Menu	Parameter	User Input	Default	Used by RESRAD (If different from user input)	Parameter Name
R019	Livestock soil intake (kg/day)	5.000E-01	5.000E-01	---	LSI
R019	Mass loading for foliar deposition (g/m**3)	1.000E-04	1.000E-04	---	MLFD
R019	Depth of soil mixing layer (m)	1.500E-01	1.500E-01	---	DM
R019	Depth of roots (m)	9.000E-01	9.000E-01	---	DROOT
R019	Drinking water fraction from ground water	1.000E+00	1.000E+00	---	FGWDW
R019	Household water fraction from ground water	not used	1.000E+00	---	FGWHH
R019	Livestock water fraction from ground water	1.000E+00	1.000E+00	---	FGWLW
R019	Irrigation fraction from ground water	1.000E+00	1.000E+00	---	FGWIR
R19B	Wet weight crop yield for Non-Leafy (kg/m**2)	7.000E-01	7.000E-01	---	YV(1)
R19B	Wet weight crop yield for Leafy (kg/m**2)	1.500E+00	1.500E+00	---	YV(2)
R19B	Wet weight crop yield for Fodder (kg/m**2)	1.100E+00	1.100E+00	---	YV(3)
R19B	Growing Season for Non-Leafy (years)	1.700E-01	1.700E-01	---	TE(1)
R19B	Growing Season for Leafy (years)	2.500E-01	2.500E-01	---	TE(2)
R19B	Growing Season for Fodder (years)	8.000E-02	8.000E-02	---	TE(3)
R19B	Translocation Factor for Non-Leafy	1.000E-01	1.000E-01	---	TIV(1)
R19B	Translocation Factor for Leafy	1.000E+00	1.000E+00	---	TIV(2)
R19B	Translocation Factor for Fodder	1.000E+00	1.000E+00	---	TIV(3)
R19B	Dry Foliar Interception Fraction for Non-Leafy	2.500E-01	2.500E-01	---	RDRY(1)
R19B	Dry Foliar Interception Fraction for Leafy	2.500E-01	2.500E-01	---	RDRY(2)
R19B	Dry Foliar Interception Fraction for Fodder	2.500E-01	2.500E-01	---	RDRY(3)
R19B	Wet Foliar Interception Fraction for Non-Leafy	2.500E-01	2.500E-01	---	RWET(1)
R19B	Wet Foliar Interception Fraction for Leafy	2.500E-01	2.500E-01	---	RWET(2)
R19B	Wet Foliar Interception Fraction for Fodder	2.500E-01	2.500E-01	---	RWET(3)
R19B	Weathering Removal Constant for Vegetation	2.000E+01	2.000E+01	---	WLAM
C14	C-12 concentration in water (g/cm**3)	not used	2.000E-05	---	C12WTR
C14	C-12 concentration in contaminated soil (g/g)	not used	3.000E-02	---	C12CZ
C14	Fraction of vegetation carbon from soil	not used	2.000E-02	---	CSOIL
C14	Fraction of vegetation carbon from air	not used	9.800E-01	---	CAIR
C14	C-14 evasion layer thickness in soil (m)	not used	3.000E-01	---	DMC
C14	C-14 evasion flux rate from soil (1/sec)	not used	7.000E-07	---	EVSN
C14	C-12 evasion flux rate from soil (1/sec)	not used	1.000E-10	---	REVSN
C14	Fraction of grain in beef cattle feed	not used	8.000E-01	---	AVFG4
C14	Fraction of grain in milk cow feed	not used	2.000E-01	---	AVFG5
STOR	Storage times of contaminated foodstuffs (days):				
STOR	Fruits, non-leafy vegetables, and grain	1.400E+01	1.400E+01	---	STOR_T(1)
STOR	Leafy vegetables	1.000E+00	1.000E+00	---	STOR_T(2)
STOR	Milk	1.000E+00	1.000E+00	---	STOR_T(3)
STOR	Meat and poultry	2.000E+01	2.000E+01	---	STOR_T(4)
STOR	Fish	7.000E+00	7.000E+00	---	STOR_T(5)
STOR	Crustacea and mollusks	7.000E+00	7.000E+00	---	STOR_T(6)
STOR	Well water	1.000E+00	1.000E+00	---	STOR_T(7)
STOR	Surface water	1.000E+00	1.000E+00	---	STOR_T(8)
STOR	Livestock fodder	4.500E+01	4.500E+01	---	STOR_T(9)
R021	Thickness of building foundation (m)	not used	1.500E-01	---	FLOOR1
R021	Bulk density of building foundation (g/cm**3)	not used	2.400E+00	---	DENSFL
R021	Total porosity of the cover material	not used	4.000E-01	---	TPCV

Site-Specific Parameter Summary (continued)

Menu	Parameter	User Input	Default	Used by RESRAD (If different from user input)	Parameter Name
R021	Total porosity of the building foundation	not used	1.000E-01	---	TPFL
R021	Volumetric water content of the cover material	not used	5.000E-02	---	PH2OCV
R021	Volumetric water content of the foundation	not used	3.000E-02	---	PH2OFL
R021	Diffusion coefficient for radon gas (m/sec):				
R021	in cover material	not used	2.000E-06	---	DIFCV
R021	in foundation material	not used	3.000E-07	---	DIFFL
R021	in contaminated zone soil	not used	2.000E-06	---	DIFCZ
R021	Radon vertical dimension of mixing (m)	not used	2.000E+00	---	HMIX
R021	Average building air exchange rate (1/hr)	not used	5.000E-01	---	REXG
R021	Height of the building (room) (m)	not used	2.500E+00	---	HRM
R021	Building interior area factor	not used	0.000E+00	---	FAI
R021	Building depth below ground surface (m)	not used	-1.000E+00	---	DMFL
R021	Emanating power of Rn-222 gas	not used	2.500E-01	---	EMANA(1)
R021	Emanating power of Rn-220 gas	not used	1.500E-01	---	EMANA(2)
TITL	Number of graphical time points	32	---	---	NPTS
TITL	Maximum number of integration points for dose	17	---	---	LYMAX
TITL	Maximum number of integration points for risk	257	---	---	KYMAX

Summary of Pathway Selections

Pathway	User Selection
1 -- external gamma	active
2 -- inhalation (w/o radon)	active
3 -- plant ingestion	active
4 -- meat ingestion	active
5 -- milk ingestion	active
6 -- aquatic foods	active
7 -- drinking water	active
8 -- soil ingestion	active
9 -- radon	suppressed
Find peak pathway doses	suppressed

Contaminated Zone Dimensions		Initial Soil Concentrations, pCi/g	
Area:	255.00 square meters	Cs-137	5.300E-02
Thickness:	2.00 meters	Pb-210	3.730E-01
Cover Depth:	0.00 meters	Ra-226	3.730E-01
		Sr-90	7.000E-02

Total Dose TDOSE(t), mrem/yr
Basic Radiation Dose Limit = 2.500E+01 mrem/yr
Total Mixture Sum M(t) = Fraction of Basic Dose Limit Received at Time (t)

t (years):	0.000E+00	1.000E+00	3.000E+00	1.000E+01	3.000E+01	1.000E+02	3.000E+02	1.000E+03
TDOSE(t):	3.356E+00	3.344E+00	3.319E+00	3.236E+00	3.022E+00	2.440E+00	1.385E+00	7.687E-01
M(t):	1.342E-01	1.338E-01	1.328E-01	1.294E-01	1.209E-01	9.758E-02	5.539E-02	3.075E-02

Maximum TDOSE(t): 3.356E+00 mrem/yr at t = 0.000E+00 years

Total Dose Contributions TDOSE(i,p,t) for Individual Radionuclides (i) and Pathways (p)
As mrem/yr and Fraction of Total Dose At t = 0.000E+00 years

Water Independent Pathways (Inhalation excludes radon)

Radio-	Ground		Inhalation		Radon		Plant		Meat		Milk		Soil	
Nuclide	mrem/yr	fract.	mrem/yr	fract.	mrem/yr	fract.	mrem/yr	fract.	mrem/yr	fract.	mrem/yr	fract.	mrem/yr	fract.
Cs-137	9.034E-02	0.0269	7.293E-08	0.0000	0.000E+00	0.0000	2.325E-03	0.0007	2.033E-04	0.0001	6.638E-05	0.0000	1.829E-05	0.0000
Pb-210	1.169E-03	0.0003	3.714E-04	0.0001	0.000E+00	0.0000	5.924E-01	0.1765	2.025E-03	0.0006	9.869E-04	0.0003	1.864E-02	0.0056
Ra-226	2.120E+00	0.6317	1.455E-04	0.0000	0.000E+00	0.0000	4.476E-01	0.1334	1.323E-03	0.0004	1.580E-03	0.0005	3.726E-03	0.0011
Sr-90	8.615E-04	0.0003	3.939E-06	0.0000	0.000E+00	0.0000	7.017E-02	0.0209	1.417E-03	0.0004	4.206E-04	0.0001	7.358E-05	0.0000
Total	2.213E+00	0.6593	5.209E-04	0.0002	0.000E+00	0.0000	1.113E+00	0.3315	4.969E-03	0.0015	3.054E-03	0.0009	2.246E-02	0.0067

Total Dose Contributions TDOSE(i,p,t) for Individual Radionuclides (i) and Pathways (p)
As mrem/yr and Fraction of Total Dose At t = 0.000E+00 years

Water Dependent Pathways

Radio-	Water		Fish		Radon		Plant		Meat		Milk		All Pathways*	
Nuclide	mrem/yr	fract.	mrem/yr	fract.	mrem/yr	fract.	mrem/yr	fract.	mrem/yr	fract.	mrem/yr	fract.	mrem/yr	fract.
Cs-137	0.000E+00	0.0000	0.000E+00	0.0000	0.000E+00	0.0000	0.000E+00	0.0000	0.000E+00	0.0000	0.000E+00	0.0000	9.295E-02	0.0277
Pb-210	0.000E+00	0.0000	0.000E+00	0.0000	0.000E+00	0.0000	0.000E+00	0.0000	0.000E+00	0.0000	0.000E+00	0.0000	6.156E-01	0.1834
Ra-226	0.000E+00	0.0000	0.000E+00	0.0000	0.000E+00	0.0000	0.000E+00	0.0000	0.000E+00	0.0000	0.000E+00	0.0000	2.575E+00	0.7671
Sr-90	0.000E+00	0.0000	0.000E+00	0.0000	0.000E+00	0.0000	0.000E+00	0.0000	0.000E+00	0.0000	0.000E+00	0.0000	7.294E-02	0.0217
Total	0.000E+00	0.0000	0.000E+00	0.0000	0.000E+00	0.0000	0.000E+00	0.0000	0.000E+00	0.0000	0.000E+00	0.0000	3.356E+00	1.0000

*Sum of all water independent and dependent pathways.

Total Dose Contributions TDOSE(i,p,t) for Individual Radionuclides (i) and Pathways (p)
As mrem/yr and Fraction of Total Dose At t = 1.000E+00 years

Water Independent Pathways (Inhalation excludes radon)

Radio-	Ground		Inhalation		Radon		Plant		Meat		Milk		Soil	
Nuclide	mrem/yr	fract.	mrem/yr	fract.	mrem/yr	fract.	mrem/yr	fract.	mrem/yr	fract.	mrem/yr	fract.	mrem/yr	fract.
Cs-137	8.827E-02	0.0264	7.126E-08	0.0000	0.000E+00	0.0000	2.271E-03	0.0007	1.986E-04	0.0001	6.486E-05	0.0000	1.787E-05	0.0000
Pb-210	1.131E-03	0.0003	3.595E-04	0.0001	0.000E+00	0.0000	5.734E-01	0.1715	1.960E-03	0.0006	9.551E-04	0.0003	1.804E-02	0.0054
Ra-226	2.114E+00	0.6323	1.564E-04	0.0000	0.000E+00	0.0000	4.647E-01	0.1390	1.385E-03	0.0004	1.606E-03	0.0005	4.284E-03	0.0013
Sr-90	8.366E-04	0.0003	3.825E-06	0.0000	0.000E+00	0.0000	6.814E-02	0.0204	1.376E-03	0.0004	4.085E-04	0.0001	7.145E-05	0.0000
Total	2.205E+00	0.6593	5.198E-04	0.0002	0.000E+00	0.0000	1.109E+00	0.3315	4.920E-03	0.0015	3.035E-03	0.0009	2.241E-02	0.0067

Total Dose Contributions TDOSE(i,p,t) for Individual Radionuclides (i) and Pathways (p)
As mrem/yr and Fraction of Total Dose At t = 1.000E+00 years

Water Dependent Pathways

Radio-	Water		Fish		Radon		Plant		Meat		Milk		All Pathways*	
Nuclide	mrem/yr	fract.	mrem/yr	fract.	mrem/yr	fract.	mrem/yr	fract.	mrem/yr	fract.	mrem/yr	fract.	mrem/yr	fract.
Cs-137	0.000E+00	0.0000	0.000E+00	0.0000	0.000E+00	0.0000	0.000E+00	0.0000	0.000E+00	0.0000	0.000E+00	0.0000	9.082E-02	0.0272
Pb-210	0.000E+00	0.0000	0.000E+00	0.0000	0.000E+00	0.0000	0.000E+00	0.0000	0.000E+00	0.0000	0.000E+00	0.0000	5.958E-01	0.1782
Ra-226	0.000E+00	0.0000	0.000E+00	0.0000	0.000E+00	0.0000	0.000E+00	0.0000	0.000E+00	0.0000	0.000E+00	0.0000	2.586E+00	0.7735
Sr-90	0.000E+00	0.0000	0.000E+00	0.0000	0.000E+00	0.0000	0.000E+00	0.0000	0.000E+00	0.0000	0.000E+00	0.0000	7.084E-02	0.0212
Total	0.000E+00	0.0000	0.000E+00	0.0000	0.000E+00	0.0000	0.000E+00	0.0000	0.000E+00	0.0000	0.000E+00	0.0000	3.344E+00	1.0000

*Sum of all water independent and dependent pathways.

Total Dose Contributions TDOSE(i,p,t) for Individual Radionuclides (i) and Pathways (p)
As mrem/yr and Fraction of Total Dose At t = 3.000E+00 years

Water Independent Pathways (Inhalation excludes radon)

Radio-	Ground		Inhalation		Radon		Plant		Meat		Milk		Soil	
Nuclide	mrem/yr	fract.	mrem/yr	fract.	mrem/yr	fract.	mrem/yr	fract.	mrem/yr	fract.	mrem/yr	fract.	mrem/yr	fract.
Cs-137	8.428E-02	0.0254	6.804E-08	0.0000	0.000E+00	0.0000	2.169E-03	0.0007	1.896E-04	0.0001	6.192E-05	0.0000	1.706E-05	0.0000
Pb-210	1.059E-03	0.0003	3.367E-04	0.0001	0.000E+00	0.0000	5.370E-01	0.1618	1.836E-03	0.0006	8.945E-04	0.0003	1.690E-02	0.0051
Ra-226	2.102E+00	0.6334	1.771E-04	0.0001	0.000E+00	0.0000	4.965E-01	0.1496	1.495E-03	0.0005	1.655E-03	0.0005	5.343E-03	0.0016
Sr-90	7.890E-04	0.0002	3.607E-06	0.0000	0.000E+00	0.0000	6.426E-02	0.0194	1.298E-03	0.0004	3.853E-04	0.0001	6.739E-05	0.0000
Total	2.189E+00	0.6594	5.175E-04	0.0002	0.000E+00	0.0000	1.100E+00	0.3314	4.818E-03	0.0015	2.997E-03	0.0009	2.232E-02	0.0067

Total Dose Contributions TDOSE(i,p,t) for Individual Radionuclides (i) and Pathways (p)
As mrem/yr and Fraction of Total Dose At t = 3.000E+00 years

Water Dependent Pathways

Radio-	Water		Fish		Radon		Plant		Meat		Milk		All Pathways*	
Nuclide	mrem/yr	fract.	mrem/yr	fract.	mrem/yr	fract.	mrem/yr	fract.	mrem/yr	fract.	mrem/yr	fract.	mrem/yr	fract.
Cs-137	0.000E+00	0.0000	0.000E+00	0.0000	0.000E+00	0.0000	0.000E+00	0.0000	0.000E+00	0.0000	0.000E+00	0.0000	8.671E-02	0.0261
Pb-210	0.000E+00	0.0000	0.000E+00	0.0000	0.000E+00	0.0000	0.000E+00	0.0000	0.000E+00	0.0000	0.000E+00	0.0000	5.580E-01	0.1681
Ra-226	0.000E+00	0.0000	0.000E+00	0.0000	0.000E+00	0.0000	0.000E+00	0.0000	0.000E+00	0.0000	0.000E+00	0.0000	2.608E+00	0.7856
Sr-90	0.000E+00	0.0000	0.000E+00	0.0000	0.000E+00	0.0000	0.000E+00	0.0000	0.000E+00	0.0000	0.000E+00	0.0000	6.680E-02	0.0201
Total	0.000E+00	0.0000	0.000E+00	0.0000	0.000E+00	0.0000	0.000E+00	0.0000	0.000E+00	0.0000	0.000E+00	0.0000	3.319E+00	1.0000

*Sum of all water independent and dependent pathways.

Total Dose Contributions TDOSE(i,p,t) for Individual Radionuclides (i) and Pathways (p)
As mrem/yr and Fraction of Total Dose At t = 1.000E+01 years

Water Independent Pathways (Inhalation excludes radon)

Radio-	Ground		Inhalation		Radon		Plant		Meat		Milk		Soil	
Nuclide	mrem/yr	fract.	mrem/yr	fract.	mrem/yr	fract.	mrem/yr	fract.	mrem/yr	fract.	mrem/yr	fract.	mrem/yr	fract.
Cs-137	7.167E-02	0.0221	5.786E-08	0.0000	0.000E+00	0.0000	1.844E-03	0.0006	1.613E-04	0.0000	5.266E-05	0.0000	1.451E-05	0.0000
Pb-210	8.424E-04	0.0003	2.677E-04	0.0001	0.000E+00	0.0000	4.270E-01	0.1319	1.460E-03	0.0005	7.113E-04	0.0002	1.343E-02	0.0042
Ra-226	2.062E+00	0.6371	2.385E-04	0.0001	0.000E+00	0.0000	5.902E-01	0.1824	1.819E-03	0.0006	1.795E-03	0.0006	8.491E-03	0.0026
Sr-90	6.426E-04	0.0002	2.938E-06	0.0000	0.000E+00	0.0000	5.234E-02	0.0162	1.057E-03	0.0003	3.138E-04	0.0001	5.488E-05	0.0000
Total	2.135E+00	0.6597	5.092E-04	0.0002	0.000E+00	0.0000	1.071E+00	0.3311	4.497E-03	0.0014	2.873E-03	0.0009	2.199E-02	0.0068

Total Dose Contributions TDOSE(i,p,t) for Individual Radionuclides (i) and Pathways (p)
As mrem/yr and Fraction of Total Dose At t = 1.000E+01 years

Water Dependent Pathways

Radio-	Water		Fish		Radon		Plant		Meat		Milk		All Pathways*	
Nuclide	mrem/yr	fract.	mrem/yr	fract.	mrem/yr	fract.	mrem/yr	fract.	mrem/yr	fract.	mrem/yr	fract.	mrem/yr	fract.
Cs-137	0.000E+00	0.0000	0.000E+00	0.0000	0.000E+00	0.0000	0.000E+00	0.0000	0.000E+00	0.0000	0.000E+00	0.0000	7.375E-02	0.0228
Pb-210	0.000E+00	0.0000	0.000E+00	0.0000	0.000E+00	0.0000	0.000E+00	0.0000	0.000E+00	0.0000	0.000E+00	0.0000	4.437E-01	0.1371
Ra-226	0.000E+00	0.0000	0.000E+00	0.0000	0.000E+00	0.0000	0.000E+00	0.0000	0.000E+00	0.0000	0.000E+00	0.0000	2.664E+00	0.8233
Sr-90	0.000E+00	0.0000	0.000E+00	0.0000	0.000E+00	0.0000	0.000E+00	0.0000	0.000E+00	0.0000	0.000E+00	0.0000	5.441E-02	0.0168
Total	0.000E+00	0.0000	0.000E+00	0.0000	0.000E+00	0.0000	0.000E+00	0.0000	0.000E+00	0.0000	0.000E+00	0.0000	3.236E+00	1.0000

*Sum of all water independent and dependent pathways.

Total Dose Contributions TDOSE(i,p,t) for Individual Radionuclides (i) and Pathways (p)
As mrem/yr and Fraction of Total Dose At t = 3.000E+01 years

Water Independent Pathways (Inhalation excludes radon)

Radio-	Ground		Inhalation		Radon		Plant		Meat		Milk		Soil	
Nuclide	mrem/yr	fract.	mrem/yr	fract.	mrem/yr	fract.	mrem/yr	fract.	mrem/yr	fract.	mrem/yr	fract.	mrem/yr	fract.
Cs-137	4.512E-02	0.0149	3.642E-08	0.0000	0.000E+00	0.0000	1.161E-03	0.0004	1.015E-04	0.0000	3.315E-05	0.0000	9.133E-06	0.0000
Pb-210	4.376E-04	0.0001	1.391E-04	0.0000	0.000E+00	0.0000	2.218E-01	0.0734	7.584E-04	0.0003	3.695E-04	0.0001	6.979E-03	0.0023
Ra-226	1.950E+00	0.6451	3.438E-04	0.0001	0.000E+00	0.0000	7.468E-01	0.2471	2.365E-03	0.0008	2.011E-03	0.0007	1.397E-02	0.0046
Sr-90	3.575E-04	0.0001	1.634E-06	0.0000	0.000E+00	0.0000	2.912E-02	0.0096	5.880E-04	0.0002	1.746E-04	0.0001	3.053E-05	0.0000
Total	1.996E+00	0.6603	4.846E-04	0.0002	0.000E+00	0.0000	9.989E-01	0.3305	3.813E-03	0.0013	2.589E-03	0.0009	2.099E-02	0.0069

Total Dose Contributions TDOSE(i,p,t) for Individual Radionuclides (i) and Pathways (p)
As mrem/yr and Fraction of Total Dose At t = 3.000E+01 years

Water Dependent Pathways

Radio-	Water		Fish		Radon		Plant		Meat		Milk		All Pathways*	
Nuclide	mrem/yr	fract.	mrem/yr	fract.	mrem/yr	fract.	mrem/yr	fract.	mrem/yr	fract.	mrem/yr	fract.	mrem/yr	fract.
Cs-137	0.000E+00	0.0000	0.000E+00	0.0000	0.000E+00	0.0000	0.000E+00	0.0000	0.000E+00	0.0000	0.000E+00	0.0000	4.642E-02	0.0154
Pb-210	0.000E+00	0.0000	0.000E+00	0.0000	0.000E+00	0.0000	0.000E+00	0.0000	0.000E+00	0.0000	0.000E+00	0.0000	2.305E-01	0.0763
Ra-226	0.000E+00	0.0000	0.000E+00	0.0000	0.000E+00	0.0000	0.000E+00	0.0000	0.000E+00	0.0000	0.000E+00	0.0000	2.715E+00	0.8984
Sr-90	0.000E+00	0.0000	0.000E+00	0.0000	0.000E+00	0.0000	0.000E+00	0.0000	0.000E+00	0.0000	0.000E+00	0.0000	3.027E-02	0.0100
Total	0.000E+00	0.0000	0.000E+00	0.0000	0.000E+00	0.0000	0.000E+00	0.0000	0.000E+00	0.0000	0.000E+00	0.0000	3.022E+00	1.0000

*Sum of all water independent and dependent pathways.

Total Dose Contributions TDOSE(i,p,t) for Individual Radionuclides (i) and Pathways (p)
As mrem/yr and Fraction of Total Dose At t = 1.000E+02 years

Water Independent Pathways (Inhalation excludes radon)

Radio-	Ground		Inhalation		Radon		Plant		Meat		Milk		Soil	
Nuclide	mrem/yr	fract.	mrem/yr	fract.	mrem/yr	fract.	mrem/yr	fract.	mrem/yr	fract.	mrem/yr	fract.	mrem/yr	fract.
Cs-137	8.930E-03	0.0037	7.209E-09	0.0000	0.000E+00	0.0000	2.298E-04	0.0001	2.009E-05	0.0000	6.562E-06	0.0000	1.808E-06	0.0000
Pb-210	4.422E-05	0.0000	1.405E-05	0.0000	0.000E+00	0.0000	2.241E-02	0.0092	7.663E-05	0.0000	3.734E-05	0.0000	7.052E-04	0.0003
Ra-226	1.602E+00	0.6567	3.865E-04	0.0002	0.000E+00	0.0000	7.796E-01	0.3195	2.511E-03	0.0010	1.929E-03	0.0008	1.670E-02	0.0068
Sr-90	4.591E-05	0.0000	2.099E-07	0.0000	0.000E+00	0.0000	3.740E-03	0.0015	7.552E-05	0.0000	2.242E-05	0.0000	3.921E-06	0.0000
Total	1.611E+00	0.6604	4.008E-04	0.0002	0.000E+00	0.0000	8.059E-01	0.3304	2.683E-03	0.0011	1.995E-03	0.0008	1.741E-02	0.0071

Total Dose Contributions TDOSE(i,p,t) for Individual Radionuclides (i) and Pathways (p)
As mrem/yr and Fraction of Total Dose At t = 1.000E+02 years

Water Dependent Pathways

Radio-	Water		Fish		Radon		Plant		Meat		Milk		All Pathways*	
Nuclide	mrem/yr	fract.	mrem/yr	fract.	mrem/yr	fract.	mrem/yr	fract.	mrem/yr	fract.	mrem/yr	fract.	mrem/yr	fract.
Cs-137	0.000E+00	0.0000	0.000E+00	0.0000	0.000E+00	0.0000	0.000E+00	0.0000	0.000E+00	0.0000	0.000E+00	0.0000	9.188E-03	0.0038
Pb-210	0.000E+00	0.0000	0.000E+00	0.0000	0.000E+00	0.0000	0.000E+00	0.0000	0.000E+00	0.0000	0.000E+00	0.0000	2.329E-02	0.0095
Ra-226	0.000E+00	0.0000	0.000E+00	0.0000	0.000E+00	0.0000	0.000E+00	0.0000	0.000E+00	0.0000	0.000E+00	0.0000	2.403E+00	0.9851
Sr-90	0.000E+00	0.0000	0.000E+00	0.0000	0.000E+00	0.0000	0.000E+00	0.0000	0.000E+00	0.0000	0.000E+00	0.0000	3.887E-03	0.0016
Total	0.000E+00	0.0000	0.000E+00	0.0000	0.000E+00	0.0000	0.000E+00	0.0000	0.000E+00	0.0000	0.000E+00	0.0000	2.440E+00	1.0000

*Sum of all water independent and dependent pathways.

Total Dose Contributions TDOSE(i,p,t) for Individual Radionuclides (i) and Pathways (p)
As mrem/yr and Fraction of Total Dose At t = 3.000E+02 years

Water Independent Pathways (Inhalation excludes radon)

Radio-	Ground		Inhalation		Radon		Plant		Meat		Milk		Soil	
Nuclide	mrem/yr	fract.	mrem/yr	fract.	mrem/yr	fract.	mrem/yr	fract.	mrem/yr	fract.	mrem/yr	fract.	mrem/yr	fract.
Cs-137	8.726E-05	0.0001	7.045E-11	0.0000	0.000E+00	0.0000	2.246E-06	0.0000	1.964E-07	0.0000	6.412E-08	0.0000	1.766E-08	0.0000
Pb-210	6.329E-08	0.0000	2.011E-08	0.0000	0.000E+00	0.0000	3.208E-05	0.0000	1.097E-07	0.0000	5.344E-08	0.0000	1.009E-06	0.0000
Ra-226	9.139E-01	0.6600	2.288E-04	0.0002	0.000E+00	0.0000	4.579E-01	0.3307	1.477E-03	0.0011	1.122E-03	0.0008	9.941E-03	0.0072
Sr-90	1.304E-07	0.0000	5.962E-10	0.0000	0.000E+00	0.0000	1.062E-05	0.0000	2.145E-07	0.0000	6.368E-08	0.0000	1.114E-08	0.0000
Total	9.140E-01	0.6601	2.288E-04	0.0002	0.000E+00	0.0000	4.580E-01	0.3307	1.478E-03	0.0011	1.123E-03	0.0008	9.942E-03	0.0072

Total Dose Contributions TDOSE(i,p,t) for Individual Radionuclides (i) and Pathways (p)
As mrem/yr and Fraction of Total Dose At t = 3.000E+02 years

Water Dependent Pathways

Radio-	Water		Fish		Radon		Plant		Meat		Milk		All Pathways*	
Nuclide	mrem/yr	fract.	mrem/yr	fract.	mrem/yr	fract.	mrem/yr	fract.	mrem/yr	fract.	mrem/yr	fract.	mrem/yr	fract.
Cs-137	0.000E+00	0.0000	0.000E+00	0.0000	0.000E+00	0.0000	0.000E+00	0.0000	0.000E+00	0.0000	0.000E+00	0.0000	8.979E-05	0.0001
Pb-210	0.000E+00	0.0000	0.000E+00	0.0000	0.000E+00	0.0000	0.000E+00	0.0000	0.000E+00	0.0000	0.000E+00	0.0000	3.334E-05	0.0000
Ra-226	0.000E+00	0.0000	0.000E+00	0.0000	0.000E+00	0.0000	0.000E+00	0.0000	0.000E+00	0.0000	0.000E+00	0.0000	1.385E+00	0.9999
Sr-90	4.961E-06	0.0000	2.517E-09	0.0000	0.000E+00	0.0000	1.048E-07	0.0000	1.089E-08	0.0000	5.946E-09	0.0000	1.613E-05	0.0000
Total	4.961E-06	0.0000	2.517E-09	0.0000	0.000E+00	0.0000	1.048E-07	0.0000	1.089E-08	0.0000	5.946E-09	0.0000	1.385E+00	1.0000

*Sum of all water independent and dependent pathways.

Total Dose Contributions TDOSE(i,p,t) for Individual Radionuclides (i) and Pathways (p)
As mrem/yr and Fraction of Total Dose At t = 1.000E+03 years

Water Independent Pathways (Inhalation excludes radon)

Radio-	Ground		Inhalation		Radon		Plant		Meat		Milk		Soil	
Nuclide	mrem/yr	fract.	mrem/yr	fract.	mrem/yr	fract.	mrem/yr	fract.	mrem/yr	fract.	mrem/yr	fract.	mrem/yr	fract.
Cs-137	8.050E-12	0.0000	6.499E-18	0.0000	0.000E+00	0.0000	2.072E-13	0.0000	1.811E-14	0.0000	5.915E-15	0.0000	1.630E-15	0.0000
Pb-210	7.020E-18	0.0000	2.231E-18	0.0000	0.000E+00	0.0000	3.559E-15	0.0000	1.217E-17	0.0000	5.928E-18	0.0000	1.120E-16	0.0000
Ra-226	1.281E-01	0.1667	3.207E-05	0.0000	0.000E+00	0.0000	6.419E-02	0.0835	2.071E-04	0.0003	1.573E-04	0.0002	1.394E-03	0.0018
Sr-90	1.592E-16	0.0000	7.280E-19	0.0000	0.000E+00	0.0000	1.297E-14	0.0000	2.619E-16	0.0000	7.775E-17	0.0000	1.360E-17	0.0000
Total	1.281E-01	0.1667	3.207E-05	0.0000	0.000E+00	0.0000	6.419E-02	0.0835	2.071E-04	0.0003	1.573E-04	0.0002	1.394E-03	0.0018

Total Dose Contributions TDOSE(i,p,t) for Individual Radionuclides (i) and Pathways (p)
As mrem/yr and Fraction of Total Dose At t = 1.000E+03 years

Water Dependent Pathways

Radio-	Water		Fish		Radon		Plant		Meat		Milk		All Pathways*	
Nuclide	mrem/yr	fract.	mrem/yr	fract.	mrem/yr	fract.	mrem/yr	fract.	mrem/yr	fract.	mrem/yr	fract.	mrem/yr	fract.
Cs-137	0.000E+00	0.0000	0.000E+00	0.0000	0.000E+00	0.0000	0.000E+00	0.0000	0.000E+00	0.0000	0.000E+00	0.0000	8.283E-12	0.0000
Pb-210	1.122E-14	0.0000	2.352E-17	0.0000	0.000E+00	0.0000	2.205E-16	0.0000	2.451E-18	0.0000	2.011E-18	0.0000	1.517E-14	0.0000
Ra-226	5.622E-01	0.7314	1.006E-03	0.0013	0.000E+00	0.0000	1.107E-02	0.0144	1.294E-04	0.0002	1.491E-04	0.0002	7.687E-01	1.0000
Sr-90	8.084E-14	0.0000	4.102E-17	0.0000	0.000E+00	0.0000	1.709E-15	0.0000	1.778E-16	0.0000	9.695E-17	0.0000	9.634E-14	0.0000
Total	5.622E-01	0.7314	1.006E-03	0.0013	0.000E+00	0.0000	1.107E-02	0.0144	1.294E-04	0.0002	1.491E-04	0.0002	7.687E-01	1.0000

*Sum of all water independent and dependent pathways.

Dose/Source Ratios Summed Over All Pathways
Parent and Progeny Principal Radionuclide Contributions Indicated

Parent (i)	Product (j)	Thread Fraction	DSR(j,t) At Time in Years (mrem/yr)/(pCi/g) 0.000E+00	1.000E+00	3.000E+00	1.000E+01	3.000E+01	1.000E+02	3.000E+02	1.000E+03
Cs-137+D	Cs-137+D	1.000E+00	1.754E+00	1.714E+00	1.636E+00	1.391E+00	8.759E-01	1.734E-01	1.694E-03	1.563E-10
Pb-210+D	Pb-210+D	1.000E+00	1.651E+00	1.597E+00	1.496E+00	1.190E+00	6.180E-01	6.244E-02	8.937E-05	4.067E-14
Ra-226+D	Ra-226+D	1.000E+00	6.872E+00	6.853E+00	6.814E+00	6.682E+00	6.317E+00	5.190E+00	2.961E+00	7.310E-01
Ra-226+D	Pb-210+D	1.000E+00	3.038E-02	8.149E-02	1.769E-01	4.614E-01	9.623E-01	1.253E+00	7.516E-01	1.330E+00
Ra-226+D	∑DSR(j)		6.902E+00	6.934E+00	6.991E+00	7.143E+00	7.279E+00	6.443E+00	3.712E+00	2.061E+00
Sr-90+D	Sr-90+D	1.000E+00	1.042E+00	1.012E+00	9.543E-01	7.773E-01	4.324E-01	5.554E-02	2.304E-04	1.376E-12

The DSR includes contributions from associated (half-life ≤ 180 days) daughters.

Single Radionuclide Soil Guidelines G(i,t) in pCi/g
Basic Radiation Dose Limit = 2.500E+01 mrem/yr

Nuclide (i)	t= 0.000E+00	1.000E+00	3.000E+00	1.000E+01	3.000E+01	1.000E+02	3.000E+02	1.000E+03
Cs-137	1.426E+01	1.459E+01	1.528E+01	1.797E+01	2.854E+01	1.442E+02	1.476E+04	1.600E+11
Pb-210	1.515E+01	1.565E+01	1.671E+01	2.102E+01	4.045E+01	4.004E+02	2.797E+05	*7.634E+13
Ra-226	3.622E+00	3.605E+00	3.576E+00	3.500E+00	3.434E+00	3.880E+00	6.735E+00	1.213E+01
Sr-90	2.399E+01	2.470E+01	2.620E+01	3.216E+01	5.782E+01	4.502E+02	1.085E+05	1.816E+13

*At specific activity limit

Summed Dose/Source Ratios DSR(i,t) in (mrem/yr)/(pCi/g)
and Single Radionuclide Soil Guidelines G(i,t) in pCi/g
at tmin = time of minimum single radionuclide soil guideline
and at tmax = time of maximum total dose = 0.000E+00 years

Nuclide (i)	Initial (pCi/g)	tmin (years)	DSR(i,tmin)	G(i,tmin) (pCi/g)	DSR(i,tmax)	G(i,tmax) (pCi/g)
Cs-137	5.300E-02	0.000E+00	1.754E+00	1.426E+01	1.754E+00	1.426E+01
Pb-210	3.730E-01	0.000E+00	1.651E+00	1.515E+01	1.651E+00	1.515E+01
Ra-226	3.730E-01	28.11 ± 0.06	7.280E+00	3.434E+00	6.902E+00	3.622E+00
Sr-90	7.000E-02	0.000E+00	1.042E+00	2.399E+01	1.042E+00	2.399E+01

Individual Nuclide Dose Summed Over All Pathways
Parent Nuclide and Branch Fraction Indicated

Nuclide (j)	Parent (i)	THF(i)	DOSE(j,t), mrem/yr t= 0.000E+00	1.000E+00	3.000E+00	1.000E+01	3.000E+01	1.000E+02	3.000E+02	1.000E+03
Cs-137	Cs-137	1.000E+00	9.295E-02	9.082E-02	8.671E-02	7.375E-02	4.642E-02	9.188E-03	8.979E-05	8.283E-12
Pb-210	Pb-210	1.000E+00	6.156E-01	5.958E-01	5.580E-01	4.437E-01	2.305E-01	2.329E-02	3.334E-05	1.517E-14
Pb-210	Ra-226	1.000E+00	1.133E-02	3.039E-02	6.597E-02	1.721E-01	3.589E-01	4.673E-01	2.803E-01	4.960E-01
Pb-210	∑DOSE(j)		6.270E-01	6.262E-01	6.240E-01	6.158E-01	5.894E-01	4.906E-01	2.804E-01	4.960E-01
Ra-226	Ra-226	1.000E+00	2.563E+00	2.556E+00	2.542E+00	2.492E+00	2.356E+00	1.936E+00	1.104E+00	2.727E-01
Sr-90	Sr-90	1.000E+00	7.294E-02	7.084E-02	6.680E-02	5.441E-02	3.027E-02	3.887E-03	1.613E-05	9.634E-14

THF(i) is the thread fraction of the parent nuclide.

Individual Nuclide Soil Concentration
Parent Nuclide and Branch Fraction Indicated

Nuclide (j)	Parent (i)	THF(i)	S(j,t), pCi/g t= 0.000E+00	1.000E+00	3.000E+00	1.000E+01	3.000E+01	1.000E+02	3.000E+02	1.000E+03
Cs-137	Cs-137	1.000E+00	5.300E-02	5.179E-02	4.945E-02	4.205E-02	2.647E-02	5.239E-03	5.120E-05	4.723E-12
Pb-210	Pb-210	1.000E+00	3.730E-01	3.610E-01	3.381E-01	2.688E-01	1.397E-01	1.411E-02	2.020E-05	2.240E-15
Pb-210	Ra-226	1.000E+00	0.000E+00	1.139E-02	3.299E-02	9.742E-02	2.110E-01	2.778E-01	1.668E-01	2.339E-02
Pb-210	∑S(j):		3.730E-01	3.724E-01	3.711E-01	3.663E-01	3.506E-01	2.919E-01	1.668E-01	2.339E-02
Ra-226	Ra-226	1.000E+00	3.730E-01	3.720E-01	3.699E-01	3.627E-01	3.429E-01	2.817E-01	1.607E-01	2.253E-02
Sr-90	Sr-90	1.000E+00	7.000E-02	6.798E-02	6.411E-02	5.221E-02	2.905E-02	3.731E-03	1.060E-05	1.294E-14

THF(i) is the thread fraction of the parent nuclide.

RESCALC.EXE execution time = 0.54 seconds

Table of Contents

Part III: Intake Quantities and Health Risk Factors

Cancer Risk Slope Factors 2
Risk Slope and ETFG for the Ground Pathway 3
Amount of Intake Quantities and Excess Cancer Risks
Time= 0.000E+00 4
Time= 1.000E+00 7
Time= 3.000E+00 10
Time= 1.000E+01 13
Time= 3.000E+01 16
Time= 1.000E+02 19
Time= 3.000E+02 22
Time= 1.000E+03 25

Cancer Risk Slope Factors Summary Table
Risk Library: FGR 13 Morbidity

Menu	Parameter	Current Value	Base Case*	Parameter Name
Sf-1	Ground external radiation slope factors, 1/yr per (pCi/g):			
Sf-1	Cs-137+D	2.55E-06	5.32E-10	SLPF(1,1)
Sf-1	Pb-210+D	4.21E-09	1.41E-09	SLPF(2,1)
Sf-1	Ra-226+D	8.49E-06	2.29E-08	SLPF(3,1)
Sf-1	Sr-90+D	1.96E-08	4.82E-10	SLPF(4,1)
Sf-2	Inhalation, slope factors, 1/(pCi):			
Sf-2	Cs-137+D	1.12E-10	1.12E-10	SLPF(1,2)
Sf-2	Pb-210+D	3.08E-08	1.58E-08	SLPF(2,2)
Sf-2	Ra-226+D	2.83E-08	2.82E-08	SLPF(3,2)
Sf-2	Sr-90+D	4.33E-10	4.25E-10	SLPF(4,2)
Sf-3	Food ingestion, slope factors, 1/(pCi):			
Sf-3	Cs-137+D	3.74E-11	3.74E-11	SLPF(1,3)
Sf-3	Pb-210+D	3.44E-09	1.18E-09	SLPF(2,3)
Sf-3	Ra-226+D	5.15E-10	5.14E-10	SLPF(3,3)
Sf-3	Sr-90+D	9.53E-11	6.88E-11	SLPF(4,3)
Sf-3	Water ingestion, slope factors, 1/(pCi):			
Sf-3	Cs-137+D	3.04E-11	3.04E-11	SLPF(1,4)
Sf-3	Pb-210+D	2.66E-09	8.81E-10	SLPF(2,4)
Sf-3	Ra-226+D	3.86E-10	3.85E-10	SLPF(3,4)
Sf-3	Sr-90+D	7.40E-11	5.59E-11	SLPF(4,4)
Sf-3	Soil ingestion, slope factors, 1/(pCi):			
Sf-3	Cs-137+D	3.74E-11	3.74E-11	SLPF(1,5)
Sf-3	Pb-210+D	3.44E-09	1.18E-09	SLPF(2,5)
Sf-3	Ra-226+D	5.15E-10	5.14E-10	SLPF(3,5)
Sf-3	Sr-90+D	9.53E-11	6.88E-11	SLPF(4,5)
Sf-Rn	Radon Inhalation slope factors, 1/(pCi):			
Sf-Rn	Rn-222	1.80E-12	1.80E-12	SLPFRN(1,1)
Sf-Rn	Po-218	3.70E-12	3.70E-12	SLPFRN(1,2)
Sf-Rn	Pb-214	6.20E-12	6.20E-12	SLPFRN(1,3)
Sf-Rn	Bi-214	1.50E-11	1.50E-11	SLPFRN(1,4)
Sf-Rn	Radon K factors, (mrem/WLM):			
Sf-Rn	Rn-222 Indoor	7.60E+02	7.60E+02	KFACTR(1,1)
Sf-Rn	Rn-222 Outdoor	5.70E+02	5.70E+02	KFACTR(1,2)

*Base Case means Default.Lib w/o Associate Nuclide contributions.

Risk Slope and Environmental Transport Factors for the Ground Pathway

Nuclide (i)	Slope(i)*	ETFG(i,t) At Time in Years (dimensionless) t= 0.000E+00	1.000E+00	3.000E+00	1.000E+01	3.000E+01	1.000E+02	3.000E+02	1.000E+03
At-218	3.570E-09	5.286E-01	5.286E-01	5.286E-01	5.286E-01	5.286E-01	5.286E-01	5.286E-01	5.286E-01
Ba-137m	2.690E-06	5.053E-01	5.053E-01	5.053E-01	5.053E-01	5.053E-01	5.053E-01	5.053E-01	5.053E-01
Bi-210	2.760E-09	5.166E-01	5.166E-01	5.166E-01	5.166E-01	5.166E-01	5.166E-01	5.166E-01	5.166E-01
Bi-214	7.480E-06	5.079E-01	5.079E-01	5.079E-01	5.079E-01	5.079E-01	5.079E-01	5.079E-01	5.079E-01
Cs-137	5.320E-10	5.246E-01	5.246E-01	5.246E-01	5.246E-01	5.246E-01	5.246E-01	5.246E-01	5.246E-01
Pb-210	1.410E-09	5.295E-01	5.295E-01	5.295E-01	5.295E-01	5.295E-01	5.295E-01	5.295E-01	5.295E-01
Pb-214	9.820E-07	5.164E-01	5.164E-01	5.164E-01	5.164E-01	5.164E-01	5.164E-01	5.164E-01	5.164E-01
Po-210	3.950E-11	5.068E-01	5.068E-01	5.068E-01	5.068E-01	5.068E-01	5.068E-01	5.068E-01	5.068E-01
Po-214	3.860E-10	5.054E-01	5.054E-01	5.054E-01	5.054E-01	5.054E-01	5.054E-01	5.054E-01	5.054E-01
Po-218	4.260E-11	5.068E-01	5.068E-01	5.068E-01	5.068E-01	5.068E-01	5.068E-01	5.068E-01	5.068E-01
Ra-226	2.290E-08	5.273E-01	5.273E-01	5.273E-01	5.273E-01	5.273E-01	5.273E-01	5.273E-01	5.273E-01
Rn-222	1.740E-09	5.061E-01	5.061E-01	5.061E-01	5.061E-01	5.061E-01	5.061E-01	5.061E-01	5.061E-01
Sr-90	4.820E-10	5.271E-01	5.271E-01	5.271E-01	5.271E-01	5.271E-01	5.271E-01	5.271E-01	5.271E-01
Tl-210	0.000E+00	6.000E-01	6.000E-01	6.000E-01	6.000E-01	6.000E-01	6.000E-01	6.000E-01	6.000E-01
Y-90	1.910E-08	5.068E-01	5.068E-01	5.068E-01	5.068E-01	5.068E-01	5.068E-01	5.068E-01	5.068E-01

* - Units are 1/yr per (pCi/g) at infinite depth and area. Multiplication by ETFG(i,t) converts to site conditions.

Amount of Intake Quantities QINT(i,p,t) for Individual Radionuclides (i) and Pathways (p)
As pCi/yr at t= 0.000E+00 years

Radio-	Water Independent Pathways (Inhalation w/o radon)					Water Dependent Pathways					Total
Nuclide	Inhalation	Plant	Meat	Milk	Soil	Water	Fish	Plant	Meat	Milk	Ingestion*
Cs-137	2.313E-03	4.703E+01	4.113E+00	1.343E+00	3.700E-01	0.000E+00	0.000E+00	0.000E+00	0.000E+00	0.000E+00	5.286E+01
Pb-210	1.628E-02	8.276E+01	2.829E-01	1.378E-01	2.604E+00	0.000E+00	0.000E+00	0.000E+00	0.000E+00	0.000E+00	8.578E+01
Ra-226	1.628E-02	3.310E+02	9.648E-01	1.181E+00	2.604E+00	0.000E+00	0.000E+00	0.000E+00	0.000E+00	0.000E+00	3.358E+02
Sr-90	3.055E-03	4.659E+02	9.401E+00	2.792E+00	4.886E-01	0.000E+00	0.000E+00	0.000E+00	0.000E+00	0.000E+00	4.786E+02

* Sum of all ingestion pathways, i.e. water independent plant, meat, milk, soil
and water-dependent water, fish, plant, meat, milk pathways

Amount of Intake Quantities QINT9(irn,i,t) and QINT9W(irn,i,t) for Inhalation of
Radon and its Decay Products as pCi/yr at t= 0.000E+00 years

Radon	Radionuclides							
Pathway	Rn-222	Po-218	Pb-214	Bi-214	Rn-220	Po-216	Pb-212	Bi-212
Water-ind.	0.000E+00	0.000E+00	0.000E+00	0.000E+00	0.000E+00	0.000E+00	0.000E+00	0.000E+00
Water-dep.	0.000E+00	0.000E+00	0.000E+00	0.000E+00	0.000E+00	0.000E+00	0.000E+00	0.000E+00
Total	0.000E+00	0.000E+00	0.000E+00	0.000E+00	0.000E+00	0.000E+00	0.000E+00	0.000E+00

Water-ind. == Water-independent Water-dep. == Water-dependent

Excess Cancer Risks CNRS(i,p,t) for Individual Radionuclides (i) and Pathways (p)
and Fraction of Total Risk at t= 0.000E+00 years

Water Independent Pathways (Inhalation excludes radon)

Radio-	Ground		Inhalation		Plant		Meat		Milk		Soil	
Nuclide	risk	fract.	risk	fract.	risk	fract.	risk	fract.	risk	fract.	risk	fract.
Cs-137	1.475E-06	0.0236	5.603E-12	0.0000	3.805E-08	0.0006	3.327E-09	0.0001	1.086E-09	0.0000	2.993E-10	0.0000
Pb-210	2.383E-08	0.0004	1.459E-08	0.0002	8.328E-06	0.1334	2.866E-08	0.0005	1.391E-08	0.0002	2.612E-07	0.0042
Ra-226	4.635E-05	0.7422	1.324E-08	0.0002	4.903E-06	0.0785	1.429E-08	0.0002	1.750E-08	0.0003	3.856E-08	0.0006
Sr-90	1.388E-08	0.0002	2.642E-11	0.0000	8.861E-07	0.0142	1.789E-08	0.0003	5.312E-09	0.0001	9.292E-10	0.0000
Total	4.787E-05	0.7664	2.786E-08	0.0004	1.416E-05	0.2267	6.418E-08	0.0010	3.781E-08	0.0006	3.010E-07	0.0048

Excess Cancer Risks CNRS(i,p,t) for Individual Radionuclides (i) and Pathways (p)
and Fraction of Total Risk at t= 0.000E+00 years

Water Dependent Pathways

Radio-	Water		Fish		Plant		Meat		Milk		All Pathways**	
Nuclide	risk	fract.	risk	fract.	risk	fract.	risk	fract.	risk	fract.	risk	fract.
Cs-137	0.000E+00	0.0000	0.000E+00	0.0000	0.000E+00	0.0000	0.000E+00	0.0000	0.000E+00	0.0000	1.517E-06	0.0243
Pb-210	0.000E+00	0.0000	0.000E+00	0.0000	0.000E+00	0.0000	0.000E+00	0.0000	0.000E+00	0.0000	8.671E-06	0.1388
Ra-226	0.000E+00	0.0000	0.000E+00	0.0000	0.000E+00	0.0000	0.000E+00	0.0000	0.000E+00	0.0000	5.134E-05	0.8221
Sr-90	0.000E+00	0.0000	0.000E+00	0.0000	0.000E+00	0.0000	0.000E+00	0.0000	0.000E+00	0.0000	9.241E-07	0.0148
Total	0.000E+00	0.0000	0.000E+00	0.0000	0.000E+00	0.0000	0.000E+00	0.0000	0.000E+00	0.0000	6.245E-05	1.0000

** Sum of water independent ground, inhalation, plant, meat, milk, soil
and water dependent water, fish, plant, meat, milk pathways

Excess Cancer Risks CNRS9(irn,i,t) and CNRS9W(irn,i,t) for Inhalation of
Radon and its Decay Products at t= 0.000E+00 years

Radon	Radionuclides							
Pathway	Rn-222	Po-218	Pb-214	Bi-214	Rn-220	Po-216	Pb-212	Bi-212
Water-ind.	0.000E+00	0.000E+00	0.000E+00	0.000E+00	0.000E+00	0.000E+00	0.000E+00	0.000E+00
Water-dep.	0.000E+00	0.000E+00	0.000E+00	0.000E+00	0.000E+00	0.000E+00	0.000E+00	0.000E+00
Total	0.000E+00	0.000E+00	0.000E+00	0.000E+00	0.000E+00	0.000E+00	0.000E+00	0.000E+00

Water-ind. == Water-independent Water-dep. == Water-dependent

Total Excess Cancer Risk CNRS(i,p,t)*** for Initially Existent Radionuclides (i) and Pathways (p)
and Fraction of Total Risk at t= 0.000E+00 years

Water Independent Pathways (Inhalation excludes radon)

Radio-	Ground		Inhalation		Radon		Plant		Meat		Milk		Soil	
Nuclide	risk	fract.	risk	fract.	risk	fract.	risk	fract.	risk	fract.	risk	fract.	risk	fract.
Cs-137	1.475E-06	0.0236	5.603E-12	0.0000	0.000E+00	0.0000	3.805E-08	0.0006	3.327E-09	0.0001	1.086E-09	0.0000	2.993E-10	0.0000
Pb-210	1.562E-08	0.0003	9.563E-09	0.0002	0.000E+00	0.0000	5.444E-06	0.0872	1.861E-08	0.0003	9.068E-09	0.0001	1.713E-07	0.0027
Ra-226	4.636E-05	0.7424	1.826E-08	0.0003	0.000E+00	0.0000	7.787E-06	0.1247	2.435E-08	0.0004	2.235E-08	0.0004	1.285E-07	0.0021
Sr-90	1.388E-08	0.0002	2.642E-11	0.0000	0.000E+00	0.0000	8.861E-07	0.0142	1.789E-08	0.0003	5.312E-09	0.0001	9.292E-10	0.0000
Total	4.787E-05	0.7664	2.786E-08	0.0004	0.000E+00	0.0000	1.416E-05	0.2267	6.418E-08	0.0010	3.781E-08	0.0006	3.010E-07	0.0048

Total Excess Cancer Risk CNRS(i,p,t)*** for Initially Existent Radionuclides (i) and Pathways (p)
and Fraction of Total Risk at t= 0.000E+00 years

Water Dependent Pathways

Radio-	Water		Fish		Radon		Plant		Meat		Milk		All pathways	
Nuclide	risk	fract.	risk	fract.	risk	fract.	risk	fract.	risk	fract.	risk	fract.	risk	fract.
Cs-137	0.000E+00	0.0000	0.000E+00	0.0000	0.000E+00	0.0000	0.000E+00	0.0000	0.000E+00	0.0000	0.000E+00	0.0000	1.517E-06	0.0243
Pb-210	0.000E+00	0.0000	0.000E+00	0.0000	0.000E+00	0.0000	0.000E+00	0.0000	0.000E+00	0.0000	0.000E+00	0.0000	5.668E-06	0.0908
Ra-226	0.000E+00	0.0000	0.000E+00	0.0000	0.000E+00	0.0000	0.000E+00	0.0000	0.000E+00	0.0000	0.000E+00	0.0000	5.434E-05	0.8702
Sr-90	0.000E+00	0.0000	0.000E+00	0.0000	0.000E+00	0.0000	0.000E+00	0.0000	0.000E+00	0.0000	0.000E+00	0.0000	9.241E-07	0.0148
Total	0.000E+00	0.0000	0.000E+00	0.0000	0.000E+00	0.0000	0.000E+00	0.0000	0.000E+00	0.0000	0.000E+00	0.0000	6.245E-05	1.0000

***CNRSI(i,p,t) includes contribution from decay daughter radionuclides

Amount of Intake Quantities QINT(i,p,t) for Individual Radionuclides (i) and Pathways (p)
As pCi/yr at t= 1.000E+00 years

Radio-	Water Independent Pathways (Inhalation w/o radon)					Water Dependent Pathways					Total
Nuclide	Inhalation	Plant	Meat	Milk	Soil	Water	Fish	Plant	Meat	Milk	Ingestion*
Cs-137	2.260E-03	4.596E+01	4.019E+00	1.312E+00	3.615E-01	0.000E+00	0.000E+00	0.000E+00	0.000E+00	0.000E+00	5.165E+01
Pb-210	1.625E-02	8.290E+01	2.855E-01	1.385E-01	2.599E+00	0.000E+00	0.000E+00	0.000E+00	0.000E+00	0.000E+00	8.592E+01
Ra-226	1.623E-02	3.301E+02	9.625E-01	1.178E+00	2.596E+00	0.000E+00	0.000E+00	0.000E+00	0.000E+00	0.000E+00	3.348E+02
Sr-90	2.966E-03	4.525E+02	9.139E+00	2.713E+00	4.745E-01	0.000E+00	0.000E+00	0.000E+00	0.000E+00	0.000E+00	4.648E+02

* Sum of all ingestion pathways, i.e. water independent plant, meat, milk, soil
and water-dependent water, fish, plant, meat, milk pathways

Amount of Intake Quantities QINT9(irn,i,t) and QINT9W(irn,i,t) for Inhalation of
Radon and its Decay Products as pCi/yr at t= 1.000E+00 years

Radon	Radionuclides							
Pathway	Rn-222	Po-218	Pb-214	Bi-214	Rn-220	Po-216	Pb-212	Bi-212
Water-ind.	0.000E+00	0.000E+00	0.000E+00	0.000E+00	0.000E+00	0.000E+00	0.000E+00	0.000E+00
Water-dep.	0.000E+00	0.000E+00	0.000E+00	0.000E+00	0.000E+00	0.000E+00	0.000E+00	0.000E+00
Total	0.000E+00	0.000E+00	0.000E+00	0.000E+00	0.000E+00	0.000E+00	0.000E+00	0.000E+00

Water-ind. == Water-independent Water-dep. == Water-dependent

Excess Cancer Risks CNRS(i,p,t) for Individual Radionuclides (i) and Pathways (p)
and Fraction of Total Risk at t= 1.000E+00 years

Water Independent Pathways (Inhalation excludes radon)

Radio-	Ground		Inhalation		Plant		Meat		Milk		Soil	
Nuclide	risk	fract.	risk	fract.	risk	fract.	risk	fract.	risk	fract.	risk	fract.
Cs-137	1.441E-06	0.0232	5.475E-12	0.0000	3.718E-08	0.0006	3.251E-09	0.0001	1.062E-09	0.0000	2.924E-10	0.0000
Pb-210	2.378E-08	0.0004	1.456E-08	0.0002	8.314E-06	0.1336	2.863E-08	0.0005	1.389E-08	0.0002	2.607E-07	0.0042
Ra-226	4.622E-05	0.7428	1.320E-08	0.0002	4.889E-06	0.0786	1.425E-08	0.0002	1.745E-08	0.0003	3.845E-08	0.0006
Sr-90	1.347E-08	0.0002	2.565E-11	0.0000	8.605E-07	0.0138	1.738E-08	0.0003	5.159E-09	0.0001	9.024E-10	0.0000
Total	4.770E-05	0.7665	2.779E-08	0.0004	1.410E-05	0.2266	6.351E-08	0.0010	3.757E-08	0.0006	3.004E-07	0.0048

Excess Cancer Risks CNRS(i,p,t) for Individual Radionuclides (i) and Pathways (p)
and Fraction of Total Risk at t= 1.000E+00 years

Water Dependent Pathways

Radio-	Water		Fish		Plant		Meat		Milk		All Pathways**	
Nuclide	risk	fract.	risk	fract.	risk	fract.	risk	fract.	risk	fract.	risk	fract.
Cs-137	0.000E+00	0.0000	0.000E+00	0.0000	0.000E+00	0.0000	0.000E+00	0.0000	0.000E+00	0.0000	1.483E-06	0.0238
Pb-210	0.000E+00	0.0000	0.000E+00	0.0000	0.000E+00	0.0000	0.000E+00	0.0000	0.000E+00	0.0000	8.655E-06	0.1391
Ra-226	0.000E+00	0.0000	0.000E+00	0.0000	0.000E+00	0.0000	0.000E+00	0.0000	0.000E+00	0.0000	5.120E-05	0.8227
Sr-90	0.000E+00	0.0000	0.000E+00	0.0000	0.000E+00	0.0000	0.000E+00	0.0000	0.000E+00	0.0000	8.975E-07	0.0144
Total	0.000E+00	0.0000	0.000E+00	0.0000	0.000E+00	0.0000	0.000E+00	0.0000	0.000E+00	0.0000	6.223E-05	1.0000

** Sum of water independent ground, inhalation, plant, meat, milk, soil
and water dependent water, fish, plant, meat, milk pathways

Excess Cancer Risks CNRS9(irn,i,t) and CNRS9W(irn,i,t) for Inhalation of
Radon and its Decay Products at t= 1.000E+00 years

Radon	Radionuclides							
Pathway	Rn-222	Po-218	Pb-214	Bi-214	Rn-220	Po-216	Pb-212	Bi-212
Water-ind.	0.000E+00	0.000E+00	0.000E+00	0.000E+00	0.000E+00	0.000E+00	0.000E+00	0.000E+00
Water-dep.	0.000E+00	0.000E+00	0.000E+00	0.000E+00	0.000E+00	0.000E+00	0.000E+00	0.000E+00
Total	0.000E+00	0.000E+00	0.000E+00	0.000E+00	0.000E+00	0.000E+00	0.000E+00	0.000E+00

Water-ind. == Water-independent Water-dep. == Water-dependent

Total Excess Cancer Risk CNRS(i,p,t)*** for Initially Existent Radionuclides (i) and Pathways (p)
and Fraction of Total Risk at t= 1.000E+00 years

Water Independent Pathways (Inhalation excludes radon)

Radio-	Ground		Inhalation		Radon		Plant		Meat		Milk		Soil	
Nuclide	risk	fract.	risk	fract.	risk	fract.	risk	fract.	risk	fract.	risk	fract.	risk	fract.
Cs-137	1.441E-06	0.0232	5.475E-12	0.0000	0.000E+00	0.0000	3.718E-08	0.0006	3.251E-09	0.0001	1.062E-09	0.0000	2.924E-10	0.0000
Pb-210	1.512E-08	0.0002	9.255E-09	0.0001	0.000E+00	0.0000	5.268E-06	0.0847	1.801E-08	0.0003	8.776E-09	0.0001	1.657E-07	0.0027
Ra-226	4.623E-05	0.7429	1.850E-08	0.0003	0.000E+00	0.0000	7.934E-06	0.1275	2.487E-08	0.0004	2.257E-08	0.0004	1.334E-07	0.0021
Sr-90	1.347E-08	0.0002	2.565E-11	0.0000	0.000E+00	0.0000	8.605E-07	0.0138	1.738E-08	0.0003	5.159E-09	0.0001	9.024E-10	0.0000
Total	4.770E-05	0.7665	2.779E-08	0.0004	0.000E+00	0.0000	1.410E-05	0.2266	6.351E-08	0.0010	3.757E-08	0.0006	3.004E-07	0.0048

Total Excess Cancer Risk CNRS(i,p,t)*** for Initially Existent Radionuclides (i) and Pathways (p)
and Fraction of Total Risk at t= 1.000E+00 years

Water Dependent Pathways

Radio-	Water		Fish		Radon		Plant		Meat		Milk		All pathways	
Nuclide	risk	fract.	risk	fract.	risk	fract.	risk	fract.	risk	fract.	risk	fract.	risk	fract.
Cs-137	0.000E+00	0.0000	0.000E+00	0.0000	0.000E+00	0.0000	0.000E+00	0.0000	0.000E+00	0.0000	0.000E+00	0.0000	1.483E-06	0.0238
Pb-210	0.000E+00	0.0000	0.000E+00	0.0000	0.000E+00	0.0000	0.000E+00	0.0000	0.000E+00	0.0000	0.000E+00	0.0000	5.485E-06	0.0881
Ra-226	0.000E+00	0.0000	0.000E+00	0.0000	0.000E+00	0.0000	0.000E+00	0.0000	0.000E+00	0.0000	0.000E+00	0.0000	5.437E-05	0.8736
Sr-90	0.000E+00	0.0000	0.000E+00	0.0000	0.000E+00	0.0000	0.000E+00	0.0000	0.000E+00	0.0000	0.000E+00	0.0000	8.975E-07	0.0144
Total	0.000E+00	0.0000	0.000E+00	0.0000	0.000E+00	0.0000	0.000E+00	0.0000	0.000E+00	0.0000	0.000E+00	0.0000	6.223E-05	1.0000

***CNRSI(i,p,t) includes contribution from decay daughter radionuclides

Amount of Intake Quantities QINT(i,p,t) for Individual Radionuclides (i) and Pathways (p)
As pCi/yr at t= 3.000E+00 years

Radio-	Water Independent Pathways (Inhalation w/o radon)					Water Dependent Pathways					Total
Nuclide	Inhalation	Plant	Meat	Milk	Soil	Water	Fish	Plant	Meat	Milk	Ingestion*
Cs-137	2.158E-03	4.388E+01	3.837E+00	1.253E+00	3.452E-01	0.000E+00	0.000E+00	0.000E+00	0.000E+00	0.000E+00	4.931E+01
Pb-210	1.619E-02	8.261E+01	2.845E-01	1.381E-01	2.590E+00	0.000E+00	0.000E+00	0.000E+00	0.000E+00	0.000E+00	8.562E+01
Ra-226	1.614E-02	3.283E+02	9.571E-01	1.172E+00	2.582E+00	0.000E+00	0.000E+00	0.000E+00	0.000E+00	0.000E+00	3.330E+02
Sr-90	2.797E-03	4.267E+02	8.618E+00	2.558E+00	4.475E-01	0.000E+00	0.000E+00	0.000E+00	0.000E+00	0.000E+00	4.384E+02

* Sum of all ingestion pathways, i.e. water independent plant, meat, milk, soil
and water-dependent water, fish, plant, meat, milk pathways

Amount of Intake Quantities QINT9(irn,i,t) and QINT9W(irn,i,t) for Inhalation of
Radon and its Decay Products as pCi/yr at t= 3.000E+00 years

Radon	Radionuclides							
Pathway	Rn-222	Po-218	Pb-214	Bi-214	Rn-220	Po-216	Pb-212	Bi-212
Water-ind.	0.000E+00	0.000E+00	0.000E+00	0.000E+00	0.000E+00	0.000E+00	0.000E+00	0.000E+00
Water-dep.	0.000E+00	0.000E+00	0.000E+00	0.000E+00	0.000E+00	0.000E+00	0.000E+00	0.000E+00
Total	0.000E+00	0.000E+00	0.000E+00	0.000E+00	0.000E+00	0.000E+00	0.000E+00	0.000E+00

Water-ind. == Water-independent Water-dep. == Water-dependent

Excess Cancer Risks CNRS(i,p,t) for Individual Radionuclides (i) and Pathways (p)
and Fraction of Total Risk at t= 3.000E+00 years

Water Independent Pathways (Inhalation excludes radon)

Radio-	Ground		Inhalation		Plant		Meat		Milk		Soil	
Nuclide	risk	fract.	risk	fract.	risk	fract.	risk	fract.	risk	fract.	risk	fract.
Cs-137	1.376E-06	0.0223	5.227E-12	0.0000	3.550E-08	0.0006	3.104E-09	0.0001	1.014E-09	0.0000	2.792E-10	0.0000
Pb-210	2.368E-08	0.0004	1.450E-08	0.0002	8.279E-06	0.1340	2.851E-08	0.0005	1.384E-08	0.0002	2.596E-07	0.0042
Ra-226	4.596E-05	0.7439	1.313E-08	0.0002	4.862E-06	0.0787	1.417E-08	0.0002	1.735E-08	0.0003	3.824E-08	0.0006
Sr-90	1.271E-08	0.0002	2.419E-11	0.0000	8.115E-07	0.0131	1.639E-08	0.0003	4.865E-09	0.0001	8.510E-10	0.0000
Total	4.738E-05	0.7667	2.765E-08	0.0004	1.399E-05	0.2264	6.218E-08	0.0010	3.707E-08	0.0006	2.990E-07	0.0048

Excess Cancer Risks CNRS(i,p,t) for Individual Radionuclides (i) and Pathways (p)
and Fraction of Total Risk at t= 3.000E+00 years

Water Dependent Pathways

Radio-	Water		Fish		Plant		Meat		Milk		All Pathways**	
Nuclide	risk	fract.	risk	fract.	risk	fract.	risk	fract.	risk	fract.	risk	fract.
Cs-137	0.000E+00	0.0000	0.000E+00	0.0000	0.000E+00	0.0000	0.000E+00	0.0000	0.000E+00	0.0000	1.416E-06	0.0229
Pb-210	0.000E+00	0.0000	0.000E+00	0.0000	0.000E+00	0.0000	0.000E+00	0.0000	0.000E+00	0.0000	8.619E-06	0.1395
Ra-226	0.000E+00	0.0000	0.000E+00	0.0000	0.000E+00	0.0000	0.000E+00	0.0000	0.000E+00	0.0000	5.091E-05	0.8239
Sr-90	0.000E+00	0.0000	0.000E+00	0.0000	0.000E+00	0.0000	0.000E+00	0.0000	0.000E+00	0.0000	8.464E-07	0.0137
Total	0.000E+00	0.0000	0.000E+00	0.0000	0.000E+00	0.0000	0.000E+00	0.0000	0.000E+00	0.0000	6.179E-05	1.0000

** Sum of water independent ground, inhalation, plant, meat, milk, soil
and water dependent water, fish, plant, meat, milk pathways

Excess Cancer Risks CNRS9(irn,i,t) and CNRS9W(irn,i,t) for Inhalation of
Radon and its Decay Products at t= 3.000E+00 years

Radon	Radionuclides							
Pathway	Rn-222	Po-218	Pb-214	Bi-214	Rn-220	Po-216	Pb-212	Bi-212
Water-ind.	0.000E+00	0.000E+00	0.000E+00	0.000E+00	0.000E+00	0.000E+00	0.000E+00	0.000E+00
Water-dep.	0.000E+00	0.000E+00	0.000E+00	0.000E+00	0.000E+00	0.000E+00	0.000E+00	0.000E+00
Total	0.000E+00	0.000E+00	0.000E+00	0.000E+00	0.000E+00	0.000E+00	0.000E+00	0.000E+00

Water-ind. == Water-independent Water-dep. == Water-dependent

Total Excess Cancer Risk CNRS(i,p,t)*** for Initially Existent Radionuclides (i) and Pathways (p)
and Fraction of Total Risk at t= 3.000E+00 years

Water Independent Pathways (Inhalation excludes radon)

Radio-	Ground		Inhalation		Radon		Plant		Meat		Milk		Soil	
Nuclide	risk	fract.	risk	fract.	risk	fract.	risk	fract.	risk	fract.	risk	fract.	risk	fract.
Cs-137	1.376E-06	0.0223	5.227E-12	0.0000	0.000E+00	0.0000	3.550E-08	0.0006	3.104E-09	0.0001	1.014E-09	0.0000	2.792E-10	0.0000
Pb-210	1.416E-08	0.0002	8.668E-09	0.0001	0.000E+00	0.0000	4.934E-06	0.0799	1.687E-08	0.0003	8.220E-09	0.0001	1.552E-07	0.0025
Ra-226	4.597E-05	0.7440	1.896E-08	0.0003	0.000E+00	0.0000	8.206E-06	0.1328	2.581E-08	0.0004	2.297E-08	0.0004	1.426E-07	0.0023
Sr-90	1.271E-08	0.0002	2.419E-11	0.0000	0.000E+00	0.0000	8.115E-07	0.0131	1.639E-08	0.0003	4.865E-09	0.0001	8.510E-10	0.0000
Total	4.738E-05	0.7667	2.765E-08	0.0004	0.000E+00	0.0000	1.399E-05	0.2264	6.218E-08	0.0010	3.707E-08	0.0006	2.990E-07	0.0048

Total Excess Cancer Risk CNRS(i,p,t)*** for Initially Existent Radionuclides (i) and Pathways (p)
and Fraction of Total Risk at t= 3.000E+00 years

Water Dependent Pathways

Radio-	Water		Fish		Radon		Plant		Meat		Milk		All pathways	
Nuclide	risk	fract.	risk	fract.	risk	fract.	risk	fract.	risk	fract.	risk	fract.	risk	fract.
Cs-137	0.000E+00	0.0000	0.000E+00	0.0000	0.000E+00	0.0000	0.000E+00	0.0000	0.000E+00	0.0000	0.000E+00	0.0000	1.416E-06	0.0229
Pb-210	0.000E+00	0.0000	0.000E+00	0.0000	0.000E+00	0.0000	0.000E+00	0.0000	0.000E+00	0.0000	0.000E+00	0.0000	5.138E-06	0.0831
Ra-226	0.000E+00	0.0000	0.000E+00	0.0000	0.000E+00	0.0000	0.000E+00	0.0000	0.000E+00	0.0000	0.000E+00	0.0000	5.439E-05	0.8802
Sr-90	0.000E+00	0.0000	0.000E+00	0.0000	0.000E+00	0.0000	0.000E+00	0.0000	0.000E+00	0.0000	0.000E+00	0.0000	8.464E-07	0.0137
Total	0.000E+00	0.0000	0.000E+00	0.0000	0.000E+00	0.0000	0.000E+00	0.0000	0.000E+00	0.0000	0.000E+00	0.0000	6.179E-05	1.0000

***CNRSI(i,p,t) includes contribution from decay daughter radionuclides

Amount of Intake Quantities QINT(i,p,t) for Individual Radionuclides (i) and Pathways (p)
As pCi/yr at t= 1.000E+01 years

Radio-	Water Independent Pathways (Inhalation w/o radon)					Water Dependent Pathways					Total
Nuclide	Inhalation	Plant	Meat	Milk	Soil	Water	Fish	Plant	Meat	Milk	Ingestion*
Cs-137	1.835E-03	3.732E+01	3.263E+00	1.066E+00	2.935E-01	0.000E+00	0.000E+00	0.000E+00	0.000E+00	0.000E+00	4.194E+01
Pb-210	1.598E-02	8.153E+01	2.808E-01	1.363E-01	2.557E+00	0.000E+00	0.000E+00	0.000E+00	0.000E+00	0.000E+00	8.451E+01
Ra-226	1.583E-02	3.219E+02	9.385E-01	1.149E+00	2.532E+00	0.000E+00	0.000E+00	0.000E+00	0.000E+00	0.000E+00	3.265E+02
Sr-90	2.278E-03	3.476E+02	7.019E+00	2.084E+00	3.645E-01	0.000E+00	0.000E+00	0.000E+00	0.000E+00	0.000E+00	3.570E+02

* Sum of all ingestion pathways, i.e. water independent plant, meat, milk, soil
and water-dependent water, fish, plant, meat, milk pathways

Amount of Intake Quantities QINT9(irn,i,t) and QINT9W(irn,i,t) for Inhalation of
Radon and its Decay Products as pCi/yr at t= 1.000E+01 years

Radon	Radionuclides							
Pathway	Rn-222	Po-218	Pb-214	Bi-214	Rn-220	Po-216	Pb-212	Bi-212
Water-ind.	0.000E+00	0.000E+00	0.000E+00	0.000E+00	0.000E+00	0.000E+00	0.000E+00	0.000E+00
Water-dep.	0.000E+00	0.000E+00	0.000E+00	0.000E+00	0.000E+00	0.000E+00	0.000E+00	0.000E+00
Total	0.000E+00	0.000E+00	0.000E+00	0.000E+00	0.000E+00	0.000E+00	0.000E+00	0.000E+00

Water-ind. == Water-independent Water-dep. == Water-dependent

Excess Cancer Risks CNRS(i,p,t) for Individual Radionuclides (i) and Pathways (p)
and Fraction of Total Risk at t= 1.000E+01 years

Water Independent Pathways (Inhalation excludes radon)

Radio-	Ground		Inhalation		Plant		Meat		Milk		Soil	
Nuclide	risk	fract.	risk	fract.	risk	fract.	risk	fract.	risk	fract.	risk	fract.
Cs-137	1.170E-06	0.0194	4.445E-12	0.0000	3.019E-08	0.0005	2.640E-09	0.0000	8.620E-10	0.0000	2.375E-10	0.0000
Pb-210	2.332E-08	0.0004	1.428E-08	0.0002	8.153E-06	0.1352	2.807E-08	0.0005	1.362E-08	0.0002	2.557E-07	0.0042
Ra-226	4.507E-05	0.7474	1.287E-08	0.0002	4.767E-06	0.0791	1.390E-08	0.0002	1.702E-08	0.0003	3.749E-08	0.0006
Sr-90	1.035E-08	0.0002	1.970E-11	0.0000	6.609E-07	0.0110	1.335E-08	0.0002	3.963E-09	0.0001	6.931E-10	0.0000
Total	4.627E-05	0.7674	2.717E-08	0.0005	1.361E-05	0.2257	5.796E-08	0.0010	3.547E-08	0.0006	2.941E-07	0.0049

Excess Cancer Risks CNRS(i,p,t) for Individual Radionuclides (i) and Pathways (p)
and Fraction of Total Risk at t= 1.000E+01 years

Water Dependent Pathways

Radio-	Water		Fish		Plant		Meat		Milk		All Pathways**	
Nuclide	risk	fract.	risk	fract.	risk	fract.	risk	fract.	risk	fract.	risk	fract.
Cs-137	0.000E+00	0.0000	0.000E+00	0.0000	0.000E+00	0.0000	0.000E+00	0.0000	0.000E+00	0.0000	1.204E-06	0.0200
Pb-210	0.000E+00	0.0000	0.000E+00	0.0000	0.000E+00	0.0000	0.000E+00	0.0000	0.000E+00	0.0000	8.487E-06	0.1408
Ra-226	0.000E+00	0.0000	0.000E+00	0.0000	0.000E+00	0.0000	0.000E+00	0.0000	0.000E+00	0.0000	4.992E-05	0.8278
Sr-90	0.000E+00	0.0000	0.000E+00	0.0000	0.000E+00	0.0000	0.000E+00	0.0000	0.000E+00	0.0000	6.893E-07	0.0114
Total	0.000E+00	0.0000	0.000E+00	0.0000	0.000E+00	0.0000	0.000E+00	0.0000	0.000E+00	0.0000	6.030E-05	1.0000

** Sum of water independent ground, inhalation, plant, meat, milk, soil
and water dependent water, fish, plant, meat, milk pathways

Excess Cancer Risks CNRS9(irn,i,t) and CNRS9W(irn,i,t) for Inhalation of
Radon and its Decay Products at t= 1.000E+01 years

Radon	Radionuclides							
Pathway	Rn-222	Po-218	Pb-214	Bi-214	Rn-220	Po-216	Pb-212	Bi-212
Water-ind.	0.000E+00	0.000E+00	0.000E+00	0.000E+00	0.000E+00	0.000E+00	0.000E+00	0.000E+00
Water-dep.	0.000E+00	0.000E+00	0.000E+00	0.000E+00	0.000E+00	0.000E+00	0.000E+00	0.000E+00
Total	0.000E+00	0.000E+00	0.000E+00	0.000E+00	0.000E+00	0.000E+00	0.000E+00	0.000E+00

Water-ind. == Water-independent Water-dep. == Water-dependent

Total Excess Cancer Risk CNRS(i,p,t)*** for Initially Existent Radionuclides (i) and Pathways (p)
and Fraction of Total Risk at t= 1.000E+01 years

Water Independent Pathways (Inhalation excludes radon)

Radio-	Ground		Inhalation		Radon		Plant		Meat		Milk		Soil	
Nuclide	risk	fract.	risk	fract.	risk	fract.	risk	fract.	risk	fract.	risk	fract.	risk	fract.
Cs-137	1.170E-06	0.0194	4.445E-12	0.0000	0.000E+00	0.0000	3.019E-08	0.0005	2.640E-09	0.0000	8.620E-10	0.0000	2.375E-10	0.0000
Pb-210	1.126E-08	0.0002	6.893E-09	0.0001	0.000E+00	0.0000	3.924E-06	0.0651	1.341E-08	0.0002	6.536E-09	0.0001	1.234E-07	0.0020
Ra-226	4.508E-05	0.7476	2.026E-08	0.0003	0.000E+00	0.0000	8.996E-06	0.1492	2.856E-08	0.0005	2.411E-08	0.0004	1.697E-07	0.0028
Sr-90	1.035E-08	0.0002	1.970E-11	0.0000	0.000E+00	0.0000	6.609E-07	0.0110	1.335E-08	0.0002	3.963E-09	0.0001	6.931E-10	0.0000
Total	4.627E-05	0.7674	2.717E-08	0.0005	0.000E+00	0.0000	1.361E-05	0.2257	5.796E-08	0.0010	3.547E-08	0.0006	2.941E-07	0.0049

Total Excess Cancer Risk CNRS(i,p,t)*** for Initially Existent Radionuclides (i) and Pathways (p)
and Fraction of Total Risk at t= 1.000E+01 years

Water Dependent Pathways

Radio-	Water		Fish		Radon		Plant		Meat		Milk		All pathways	
Nuclide	risk	fract.	risk	fract.	risk	fract.	risk	fract.	risk	fract.	risk	fract.	risk	fract.
Cs-137	0.000E+00	0.0000	0.000E+00	0.0000	0.000E+00	0.0000	0.000E+00	0.0000	0.000E+00	0.0000	0.000E+00	0.0000	1.204E-06	0.0200
Pb-210	0.000E+00	0.0000	0.000E+00	0.0000	0.000E+00	0.0000	0.000E+00	0.0000	0.000E+00	0.0000	0.000E+00	0.0000	4.085E-06	0.0677
Ra-226	0.000E+00	0.0000	0.000E+00	0.0000	0.000E+00	0.0000	0.000E+00	0.0000	0.000E+00	0.0000	0.000E+00	0.0000	5.432E-05	0.9009
Sr-90	0.000E+00	0.0000	0.000E+00	0.0000	0.000E+00	0.0000	0.000E+00	0.0000	0.000E+00	0.0000	0.000E+00	0.0000	6.893E-07	0.0114
Total	0.000E+00	0.0000	0.000E+00	0.0000	0.000E+00	0.0000	0.000E+00	0.0000	0.000E+00	0.0000	0.000E+00	0.0000	6.030E-05	1.0000

***CNRSI(i,p,t) includes contribution from decay daughter radionuclides

Amount of Intake Quantities QINT(i,p,t) for Individual Radionuclides (i) and Pathways (p)
As pCi/yr at t= 3.000E+01 years

Radio-	Water Independent Pathways (Inhalation w/o radon)					Water Dependent Pathways					Total
Nuclide	Inhalation	Plant	Meat	Milk	Soil	Water	Fish	Plant	Meat	Milk	Ingestion*
Cs-137	1.155E-03	2.349E+01	2.054E+00	6.707E-01	1.848E-01	0.000E+00	0.000E+00	0.000E+00	0.000E+00	0.000E+00	2.640E+01
Pb-210	1.530E-02	7.805E+01	2.688E-01	1.304E-01	2.448E+00	0.000E+00	0.000E+00	0.000E+00	0.000E+00	0.000E+00	8.090E+01
Ra-226	1.496E-02	3.043E+02	8.872E-01	1.086E+00	2.393E+00	0.000E+00	0.000E+00	0.000E+00	0.000E+00	0.000E+00	3.087E+02
Sr-90	1.267E-03	1.934E+02	3.905E+00	1.159E+00	2.028E-01	0.000E+00	0.000E+00	0.000E+00	0.000E+00	0.000E+00	1.986E+02

* Sum of all ingestion pathways, i.e. water independent plant, meat, milk, soil
and water-dependent water, fish, plant, meat, milk pathways

Amount of Intake Quantities QINT9(irn,i,t) and QINT9W(irn,i,t) for Inhalation of
Radon and its Decay Products as pCi/yr at t= 3.000E+01 years

Radon	Radionuclides							
Pathway	Rn-222	Po-218	Pb-214	Bi-214	Rn-220	Po-216	Pb-212	Bi-212
Water-ind.	0.000E+00	0.000E+00	0.000E+00	0.000E+00	0.000E+00	0.000E+00	0.000E+00	0.000E+00
Water-dep.	0.000E+00	0.000E+00	0.000E+00	0.000E+00	0.000E+00	0.000E+00	0.000E+00	0.000E+00
Total	0.000E+00	0.000E+00	0.000E+00	0.000E+00	0.000E+00	0.000E+00	0.000E+00	0.000E+00

Water-ind. == Water-independent Water-dep. == Water-dependent

Excess Cancer Risks CNRS(i,p,t) for Individual Radionuclides (i) and Pathways (p)
and Fraction of Total Risk at t= 3.000E+01 years

Water Independent Pathways (Inhalation excludes radon)

Radio-	Ground		Inhalation		Plant		Meat		Milk		Soil	
Nuclide	risk	fract.	risk	fract.	risk	fract.	risk	fract.	risk	fract.	risk	fract.
Cs-137	7.365E-07	0.0131	2.798E-12	0.0000	1.900E-08	0.0003	1.662E-09	0.0000	5.426E-10	0.0000	1.495E-10	0.0000
Pb-210	2.223E-08	0.0004	1.361E-08	0.0002	7.771E-06	0.1377	2.676E-08	0.0005	1.299E-08	0.0002	2.437E-07	0.0043
Ra-226	4.261E-05	0.7552	1.217E-08	0.0002	4.507E-06	0.0799	1.314E-08	0.0002	1.609E-08	0.0003	3.545E-08	0.0006
Sr-90	5.758E-09	0.0001	1.096E-11	0.0000	3.677E-07	0.0065	7.426E-09	0.0001	2.204E-09	0.0000	3.856E-10	0.0000
Total	4.337E-05	0.7687	2.579E-08	0.0005	1.266E-05	0.2245	4.899E-08	0.0009	3.182E-08	0.0006	2.797E-07	0.0050

Excess Cancer Risks CNRS(i,p,t) for Individual Radionuclides (i) and Pathways (p)
and Fraction of Total Risk at t= 3.000E+01 years

Water Dependent Pathways

Radio-	Water		Fish		Plant		Meat		Milk		All Pathways**	
Nuclide	risk	fract.	risk	fract.	risk	fract.	risk	fract.	risk	fract.	risk	fract.
Cs-137	0.000E+00	0.0000	0.000E+00	0.0000	0.000E+00	0.0000	0.000E+00	0.0000	0.000E+00	0.0000	7.578E-07	0.0134
Pb-210	0.000E+00	0.0000	0.000E+00	0.0000	0.000E+00	0.0000	0.000E+00	0.0000	0.000E+00	0.0000	8.091E-06	0.1434
Ra-226	0.000E+00	0.0000	0.000E+00	0.0000	0.000E+00	0.0000	0.000E+00	0.0000	0.000E+00	0.0000	4.719E-05	0.8364
Sr-90	0.000E+00	0.0000	0.000E+00	0.0000	0.000E+00	0.0000	0.000E+00	0.0000	0.000E+00	0.0000	3.835E-07	0.0068
Total	0.000E+00	0.0000	0.000E+00	0.0000	0.000E+00	0.0000	0.000E+00	0.0000	0.000E+00	0.0000	5.643E-05	1.0000

** Sum of water independent ground, inhalation, plant, meat, milk, soil
and water dependent water, fish, plant, meat, milk pathways

Excess Cancer Risks CNRS9(irn,i,t) and CNRS9W(irn,i,t) for Inhalation of
Radon and its Decay Products at t= 3.000E+01 years

Radon	Radionuclides							
Pathway	Rn-222	Po-218	Pb-214	Bi-214	Rn-220	Po-216	Pb-212	Bi-212
Water-ind.	0.000E+00	0.000E+00	0.000E+00	0.000E+00	0.000E+00	0.000E+00	0.000E+00	0.000E+00
Water-dep.	0.000E+00	0.000E+00	0.000E+00	0.000E+00	0.000E+00	0.000E+00	0.000E+00	0.000E+00
Total	0.000E+00	0.000E+00	0.000E+00	0.000E+00	0.000E+00	0.000E+00	0.000E+00	0.000E+00

Water-ind. == Water-independent Water-dep. == Water-dependent

Total Excess Cancer Risk CNRS(i,p,t)*** for Initially Existent Radionuclides (i) and Pathways (p)
and Fraction of Total Risk at t= 3.000E+01 years

Water Independent Pathways (Inhalation excludes radon)

Radio-	Ground		Inhalation		Radon		Plant		Meat		Milk		Soil	
Nuclide	risk	fract.	risk	fract.	risk	fract.	risk	fract.	risk	fract.	risk	fract.	risk	fract.
Cs-137	7.365E-07	0.0131	2.798E-12	0.0000	0.000E+00	0.0000	1.900E-08	0.0003	1.662E-09	0.0000	5.426E-10	0.0000	1.495E-10	0.0000
Pb-210	5.850E-09	0.0001	3.581E-09	0.0001	0.000E+00	0.0000	2.038E-06	0.0361	6.968E-09	0.0001	3.395E-09	0.0001	6.413E-08	0.0011
Ra-226	4.263E-05	0.7554	2.220E-08	0.0004	0.000E+00	0.0000	1.024E-05	0.1815	3.293E-08	0.0006	2.568E-08	0.0005	2.150E-07	0.0038
Sr-90	5.758E-09	0.0001	1.096E-11	0.0000	0.000E+00	0.0000	3.677E-07	0.0065	7.426E-09	0.0001	2.204E-09	0.0000	3.856E-10	0.0000
Total	4.337E-05	0.7687	2.579E-08	0.0005	0.000E+00	0.0000	1.266E-05	0.2245	4.899E-08	0.0009	3.182E-08	0.0006	2.797E-07	0.0050

Total Excess Cancer Risk CNRS(i,p,t)*** for Initially Existent Radionuclides (i) and Pathways (p)
and Fraction of Total Risk at t= 3.000E+01 years

Water Dependent Pathways

Radio-	Water		Fish		Radon		Plant		Meat		Milk		All pathways	
Nuclide	risk	fract.	risk	fract.	risk	fract.	risk	fract.	risk	fract.	risk	fract.	risk	fract.
Cs-137	0.000E+00	0.0000	0.000E+00	0.0000	0.000E+00	0.0000	0.000E+00	0.0000	0.000E+00	0.0000	0.000E+00	0.0000	7.578E-07	0.0134
Pb-210	0.000E+00	0.0000	0.000E+00	0.0000	0.000E+00	0.0000	0.000E+00	0.0000	0.000E+00	0.0000	0.000E+00	0.0000	2.122E-06	0.0376
Ra-226	0.000E+00	0.0000	0.000E+00	0.0000	0.000E+00	0.0000	0.000E+00	0.0000	0.000E+00	0.0000	0.000E+00	0.0000	5.316E-05	0.9422
Sr-90	0.000E+00	0.0000	0.000E+00	0.0000	0.000E+00	0.0000	0.000E+00	0.0000	0.000E+00	0.0000	0.000E+00	0.0000	3.835E-07	0.0068
Total	0.000E+00	0.0000	0.000E+00	0.0000	0.000E+00	0.0000	0.000E+00	0.0000	0.000E+00	0.0000	0.000E+00	0.0000	5.643E-05	1.0000

***CNRSI(i,p,t) includes contribution from decay daughter radionuclides

Amount of Intake Quantities QINT(i,p,t) for Individual Radionuclides (i) and Pathways (p)
As pCi/yr at t= 1.000E+02 years

Radio-	Water Independent Pathways (Inhalation w/o radon)					Water Dependent Pathways					Total
Nuclide	Inhalation	Plant	Meat	Milk	Soil	Water	Fish	Plant	Meat	Milk	Ingestion*
Cs-137	2.286E-04	4.649E+00	4.066E-01	1.328E-01	3.657E-02	0.000E+00	0.000E+00	0.000E+00	0.000E+00	0.000E+00	5.225E+00
Pb-210	1.274E-02	6.498E+01	2.237E-01	1.086E-01	2.038E+00	0.000E+00	0.000E+00	0.000E+00	0.000E+00	0.000E+00	6.735E+01
Ra-226	1.229E-02	2.500E+02	7.290E-01	8.925E-01	1.967E+00	0.000E+00	0.000E+00	0.000E+00	0.000E+00	0.000E+00	2.536E+02
Sr-90	1.628E-04	2.483E+01	5.015E-01	1.489E-01	2.604E-02	0.000E+00	0.000E+00	0.000E+00	0.000E+00	0.000E+00	2.551E+01

* Sum of all ingestion pathways, i.e. water independent plant, meat, milk, soil
and water-dependent water, fish, plant, meat, milk pathways

Amount of Intake Quantities QINT9(irn,i,t) and QINT9W(irn,i,t) for Inhalation of
Radon and its Decay Products as pCi/yr at t= 1.000E+02 years

Radon	Radionuclides							
Pathway	Rn-222	Po-218	Pb-214	Bi-214	Rn-220	Po-216	Pb-212	Bi-212
Water-ind.	0.000E+00	0.000E+00	0.000E+00	0.000E+00	0.000E+00	0.000E+00	0.000E+00	0.000E+00
Water-dep.	0.000E+00	0.000E+00	0.000E+00	0.000E+00	0.000E+00	0.000E+00	0.000E+00	0.000E+00
Total	0.000E+00	0.000E+00	0.000E+00	0.000E+00	0.000E+00	0.000E+00	0.000E+00	0.000E+00

Water-ind. == Water-independent Water-dep. == Water-dependent

Excess Cancer Risks CNRS(i,p,t) for Individual Radionuclides (i) and Pathways (p)
and Fraction of Total Risk at t= 1.000E+02 years

Water Independent Pathways (Inhalation excludes radon)

Radio-	Ground		Inhalation		Plant		Meat		Milk		Soil	
Nuclide	risk	fract.	risk	fract.	risk	fract.	risk	fract.	risk	fract.	risk	fract.
Cs-137	1.458E-07	0.0032	5.539E-13	0.0000	3.761E-09	0.0001	3.289E-10	0.0000	1.074E-10	0.0000	2.959E-11	0.0000
Pb-210	1.843E-08	0.0004	1.128E-08	0.0002	6.441E-06	0.1410	2.218E-08	0.0005	1.076E-08	0.0002	2.020E-07	0.0044
Ra-226	3.501E-05	0.7664	9.999E-09	0.0002	3.703E-06	0.0811	1.080E-08	0.0002	1.322E-08	0.0003	2.912E-08	0.0006
Sr-90	7.395E-10	0.0000	1.408E-12	0.0000	4.723E-08	0.0010	9.537E-10	0.0000	2.831E-10	0.0000	4.952E-11	0.0000
Total	3.517E-05	0.7700	2.128E-08	0.0005	1.019E-05	0.2232	3.426E-08	0.0007	2.437E-08	0.0005	2.312E-07	0.0051

Excess Cancer Risks CNRS(i,p,t) for Individual Radionuclides (i) and Pathways (p)
and Fraction of Total Risk at t= 1.000E+02 years

Water Dependent Pathways

Radio-	Water		Fish		Plant		Meat		Milk		All Pathways**	
Nuclide	risk	fract.	risk	fract.	risk	fract.	risk	fract.	risk	fract.	risk	fract.
Cs-137	0.000E+00	0.0000	0.000E+00	0.0000	0.000E+00	0.0000	0.000E+00	0.0000	0.000E+00	0.0000	1.500E-07	0.0033
Pb-210	0.000E+00	0.0000	0.000E+00	0.0000	0.000E+00	0.0000	0.000E+00	0.0000	0.000E+00	0.0000	6.706E-06	0.1468
Ra-226	0.000E+00	0.0000	0.000E+00	0.0000	0.000E+00	0.0000	0.000E+00	0.0000	0.000E+00	0.0000	3.877E-05	0.8488
Sr-90	0.000E+00	0.0000	0.000E+00	0.0000	0.000E+00	0.0000	0.000E+00	0.0000	0.000E+00	0.0000	4.925E-08	0.0011
Total	0.000E+00	0.0000	0.000E+00	0.0000	0.000E+00	0.0000	0.000E+00	0.0000	0.000E+00	0.0000	4.568E-05	1.0000

** Sum of water independent ground, inhalation, plant, meat, milk, soil
and water dependent water, fish, plant, meat, milk pathways

Excess Cancer Risks CNRS9(irn,i,t) and CNRS9W(irn,i,t) for Inhalation of
Radon and its Decay Products at t= 1.000E+02 years

Radon	Radionuclides							
Pathway	Rn-222	Po-218	Pb-214	Bi-214	Rn-220	Po-216	Pb-212	Bi-212
Water-ind.	0.000E+00	0.000E+00	0.000E+00	0.000E+00	0.000E+00	0.000E+00	0.000E+00	0.000E+00
Water-dep.	0.000E+00	0.000E+00	0.000E+00	0.000E+00	0.000E+00	0.000E+00	0.000E+00	0.000E+00
Total	0.000E+00	0.000E+00	0.000E+00	0.000E+00	0.000E+00	0.000E+00	0.000E+00	0.000E+00

Water-ind. == Water-independent Water-dep. == Water-dependent

Total Excess Cancer Risk CNRS(i,p,t)*** for Initially Existent Radionuclides (i) and Pathways (p)
and Fraction of Total Risk at t= 1.000E+02 years

Water Independent Pathways (Inhalation excludes radon)

Radio-	Ground		Inhalation		Radon		Plant		Meat		Milk		Soil	
Nuclide	risk	fract.	risk	fract.	risk	fract.	risk	fract.	risk	fract.	risk	fract.	risk	fract.
Cs-137	1.458E-07	0.0032	5.539E-13	0.0000	0.000E+00	0.0000	3.761E-09	0.0001	3.289E-10	0.0000	1.074E-10	0.0000	2.959E-11	0.0000
Pb-210	5.911E-10	0.0000	3.618E-10	0.0000	0.000E+00	0.0000	2.060E-07	0.0045	7.041E-10	0.0000	3.431E-10	0.0000	6.479E-09	0.0001
Ra-226	3.503E-05	0.7668	2.092E-08	0.0005	0.000E+00	0.0000	9.938E-06	0.2176	3.227E-08	0.0007	2.364E-08	0.0005	2.246E-07	0.0049
Sr-90	7.395E-10	0.0000	1.408E-12	0.0000	0.000E+00	0.0000	4.723E-08	0.0010	9.537E-10	0.0000	2.831E-10	0.0000	4.952E-11	0.0000
Total	3.517E-05	0.7700	2.128E-08	0.0005	0.000E+00	0.0000	1.019E-05	0.2232	3.426E-08	0.0007	2.437E-08	0.0005	2.312E-07	0.0051

Total Excess Cancer Risk CNRS(i,p,t)*** for Initially Existent Radionuclides (i) and Pathways (p)
and Fraction of Total Risk at t= 1.000E+02 years

Water Dependent Pathways

Radio-	Water		Fish		Radon		Plant		Meat		Milk		All pathways	
Nuclide	risk	fract.	risk	fract.	risk	fract.	risk	fract.	risk	fract.	risk	fract.	risk	fract.
Cs-137	0.000E+00	0.0000	0.000E+00	0.0000	0.000E+00	0.0000	0.000E+00	0.0000	0.000E+00	0.0000	0.000E+00	0.0000	1.500E-07	0.0033
Pb-210	0.000E+00	0.0000	0.000E+00	0.0000	0.000E+00	0.0000	0.000E+00	0.0000	0.000E+00	0.0000	0.000E+00	0.0000	2.144E-07	0.0047
Ra-226	0.000E+00	0.0000	0.000E+00	0.0000	0.000E+00	0.0000	0.000E+00	0.0000	0.000E+00	0.0000	0.000E+00	0.0000	4.527E-05	0.9909
Sr-90	0.000E+00	0.0000	0.000E+00	0.0000	0.000E+00	0.0000	0.000E+00	0.0000	0.000E+00	0.0000	0.000E+00	0.0000	4.925E-08	0.0011
Total	0.000E+00	0.0000	0.000E+00	0.0000	0.000E+00	0.0000	0.000E+00	0.0000	0.000E+00	0.0000	0.000E+00	0.0000	4.568E-05	1.0000

***CNRSI(i,p,t) includes contribution from decay daughter radionuclides

Amount of Intake Quantities QINT(i,p,t) for Individual Radionuclides (i) and Pathways (p)
As pCi/yr at t= 3.000E+02 years

Radio-	Water Independent Pathways (Inhalation w/o radon)					Water Dependent Pathways					Total
Nuclide	Inhalation	Plant	Meat	Milk	Soil	Water	Fish	Plant	Meat	Milk	Ingestion*
Cs-137	2.234E-06	4.543E-02	3.973E-03	1.297E-03	3.574E-04	0.000E+00	0.000E+00	0.000E+00	0.000E+00	0.000E+00	5.106E-02
Pb-210	7.280E-03	3.713E+01	1.279E-01	6.206E-02	1.165E+00	0.000E+00	0.000E+00	0.000E+00	0.000E+00	0.000E+00	3.849E+01
Ra-226	7.012E-03	1.426E+02	4.158E-01	5.091E-01	1.122E+00	0.000E+00	0.000E+00	0.000E+00	0.000E+00	0.000E+00	1.447E+02
Sr-90	4.624E-07	7.053E-02	1.424E-03	4.229E-04	7.396E-05	3.275E-02	1.661E-05	6.921E-04	7.191E-05	3.925E-05	1.060E-01

* Sum of all ingestion pathways, i.e. water independent plant, meat, milk, soil
and water-dependent water, fish, plant, meat, milk pathways

Amount of Intake Quantities QINT9(irn,i,t) and QINT9W(irn,i,t) for Inhalation of
Radon and its Decay Products as pCi/yr at t= 3.000E+02 years

Radon	Radionuclides							
Pathway	Rn-222	Po-218	Pb-214	Bi-214	Rn-220	Po-216	Pb-212	Bi-212
Water-ind.	0.000E+00	0.000E+00	0.000E+00	0.000E+00	0.000E+00	0.000E+00	0.000E+00	0.000E+00
Water-dep.	0.000E+00	0.000E+00	0.000E+00	0.000E+00	0.000E+00	0.000E+00	0.000E+00	0.000E+00
Total	0.000E+00	0.000E+00	0.000E+00	0.000E+00	0.000E+00	0.000E+00	0.000E+00	0.000E+00

Water-ind. == Water-independent Water-dep. == Water-dependent

Excess Cancer Risks CNRS(i,p,t) for Individual Radionuclides (i) and Pathways (p)
and Fraction of Total Risk at t= 3.000E+02 years

Water Independent Pathways (Inhalation excludes radon)

Radio-	Ground		Inhalation		Plant		Meat		Milk		Soil	
Nuclide	risk	fract.	risk	fract.	risk	fract.	risk	fract.	risk	fract.	risk	fract.
Cs-137	1.424E-09	0.0001	5.412E-15	0.0000	3.675E-11	0.0000	3.214E-12	0.0000	1.049E-12	0.0000	2.891E-13	0.0000
Pb-210	1.052E-08	0.0004	6.442E-09	0.0002	3.679E-06	0.1418	1.267E-08	0.0005	6.147E-09	0.0002	1.154E-07	0.0044
Ra-226	1.997E-05	0.7696	5.704E-09	0.0002	2.112E-06	0.0814	6.158E-09	0.0002	7.540E-09	0.0003	1.661E-08	0.0006
Sr-90	2.100E-12	0.0000	3.999E-15	0.0000	1.341E-10	0.0000	2.709E-12	0.0000	8.041E-13	0.0000	1.407E-13	0.0000
Total	1.998E-05	0.7700	1.215E-08	0.0005	5.791E-06	0.2232	1.883E-08	0.0007	1.369E-08	0.0005	1.320E-07	0.0051

Excess Cancer Risks CNRS(i,p,t) for Individual Radionuclides (i) and Pathways (p)
and Fraction of Total Risk at t= 3.000E+02 years

Water Dependent Pathways

Radio-	Water		Fish		Plant		Meat		Milk		All Pathways**	
Nuclide	risk	fract.	risk	fract.	risk	fract.	risk	fract.	risk	fract.	risk	fract.
Cs-137	0.000E+00	0.0000	0.000E+00	0.0000	0.000E+00	0.0000	0.000E+00	0.0000	0.000E+00	0.0000	1.466E-09	0.0001
Pb-210	0.000E+00	0.0000	0.000E+00	0.0000	0.000E+00	0.0000	0.000E+00	0.0000	0.000E+00	0.0000	3.830E-06	0.1476
Ra-226	0.000E+00	0.0000	0.000E+00	0.0000	0.000E+00	0.0000	0.000E+00	0.0000	0.000E+00	0.0000	2.212E-05	0.8523
Sr-90	5.620E-11	0.0000	3.672E-14	0.0000	1.530E-12	0.0000	1.589E-13	0.0000	8.675E-14	0.0000	1.979E-10	0.0000
Total	5.620E-11	0.0000	3.672E-14	0.0000	1.530E-12	0.0000	1.589E-13	0.0000	8.675E-14	0.0000	2.595E-05	1.0000

** Sum of water independent ground, inhalation, plant, meat, milk, soil
and water dependent water, fish, plant, meat, milk pathways

Excess Cancer Risks CNRS9(irn,i,t) and CNRS9W(irn,i,t) for Inhalation of
Radon and its Decay Products at t= 3.000E+02 years

Radon	Radionuclides							
Pathway	Rn-222	Po-218	Pb-214	Bi-214	Rn-220	Po-216	Pb-212	Bi-212
Water-ind.	0.000E+00	0.000E+00	0.000E+00	0.000E+00	0.000E+00	0.000E+00	0.000E+00	0.000E+00
Water-dep.	0.000E+00	0.000E+00	0.000E+00	0.000E+00	0.000E+00	0.000E+00	0.000E+00	0.000E+00
Total	0.000E+00	0.000E+00	0.000E+00	0.000E+00	0.000E+00	0.000E+00	0.000E+00	0.000E+00

Water-ind. == Water-independent Water-dep. == Water-dependent

Total Excess Cancer Risk CNRS(i,p,t)*** for Initially Existent Radionuclides (i) and Pathways (p)
and Fraction of Total Risk at t= 3.000E+02 years

Water Independent Pathways (Inhalation excludes radon)

Radio-	Ground		Inhalation		Radon		Plant		Meat		Milk		Soil	
Nuclide	risk	fract.	risk	fract.	risk	fract.	risk	fract.	risk	fract.	risk	fract.	risk	fract.
Cs-137	1.424E-09	0.0001	5.412E-15	0.0000	0.000E+00	0.0000	3.675E-11	0.0000	3.214E-12	0.0000	1.049E-12	0.0000	2.891E-13	0.0000
Pb-210	8.460E-13	0.0000	5.178E-13	0.0000	0.000E+00	0.0000	2.948E-10	0.0000	1.008E-12	0.0000	4.910E-13	0.0000	9.274E-12	0.0000
Ra-226	1.998E-05	0.7700	1.214E-08	0.0005	0.000E+00	0.0000	5.790E-06	0.2231	1.882E-08	0.0007	1.369E-08	0.0005	1.320E-07	0.0051
Sr-90	2.100E-12	0.0000	3.999E-15	0.0000	0.000E+00	0.0000	1.341E-10	0.0000	2.709E-12	0.0000	8.041E-13	0.0000	1.407E-13	0.0000
Total	1.998E-05	0.7700	1.215E-08	0.0005	0.000E+00	0.0000	5.791E-06	0.2232	1.883E-08	0.0007	1.369E-08	0.0005	1.320E-07	0.0051

Total Excess Cancer Risk CNRS(i,p,t)*** for Initially Existent Radionuclides (i) and Pathways (p)
and Fraction of Total Risk at t= 3.000E+02 years

Water Dependent Pathways

Radio-	Water		Fish		Radon		Plant		Meat		Milk		All pathways	
Nuclide	risk	fract.	risk	fract.	risk	fract.	risk	fract.	risk	fract.	risk	fract.	risk	fract.
Cs-137	0.000E+00	0.0000	0.000E+00	0.0000	0.000E+00	0.0000	0.000E+00	0.0000	0.000E+00	0.0000	0.000E+00	0.0000	1.466E-09	0.0001
Pb-210	0.000E+00	0.0000	0.000E+00	0.0000	0.000E+00	0.0000	0.000E+00	0.0000	0.000E+00	0.0000	0.000E+00	0.0000	3.069E-10	0.0000
Ra-226	0.000E+00	0.0000	0.000E+00	0.0000	0.000E+00	0.0000	0.000E+00	0.0000	0.000E+00	0.0000	0.000E+00	0.0000	2.595E-05	0.9999
Sr-90	5.620E-11	0.0000	3.672E-14	0.0000	0.000E+00	0.0000	1.530E-12	0.0000	1.589E-13	0.0000	8.675E-14	0.0000	1.979E-10	0.0000
Total	5.620E-11	0.0000	3.672E-14	0.0000	0.000E+00	0.0000	1.530E-12	0.0000	1.589E-13	0.0000	8.675E-14	0.0000	2.595E-05	1.0000

***CNRSI(i,p,t) includes contribution from decay daughter radionuclides

Amount of Intake Quantities QINT(i,p,t) for Individual Radionuclides (i) and Pathways (p)
As pCi/yr at t= 1.000E+03 years

Radio-	Water Independent Pathways (Inhalation w/o radon)					Water Dependent Pathways					Total
Nuclide	Inhalation	Plant	Meat	Milk	Soil	Water	Fish	Plant	Meat	Milk	Ingestion*
Cs-137	2.061E-13	4.191E-09	3.665E-10	1.197E-10	3.297E-11	0.000E+00	0.000E+00	0.000E+00	0.000E+00	0.000E+00	4.710E-09
Pb-210	1.020E-03	5.206E+00	1.792E-02	8.699E-03	1.633E-01	6.139E+01	1.286E-01	1.207E+00	1.344E-02	1.101E-02	6.815E+01
Ra-226	9.829E-04	1.999E+01	5.829E-02	7.136E-02	1.572E-01	8.735E+01	5.298E-02	1.730E+00	2.386E-02	5.221E-02	1.095E+02
Sr-90	5.646E-16	8.613E-11	1.739E-12	5.163E-13	9.032E-14	5.369E-10	2.724E-13	1.135E-11	1.181E-12	6.440E-13	6.389E-10

* Sum of all ingestion pathways, i.e. water independent plant, meat, milk, soil
and water-dependent water, fish, plant, meat, milk pathways

Amount of Intake Quantities QINT9(irn,i,t) and QINT9W(irn,i,t) for Inhalation of
Radon and its Decay Products as pCi/yr at t= 1.000E+03 years

Radon	Radionuclides							
Pathway	Rn-222	Po-218	Pb-214	Bi-214	Rn-220	Po-216	Pb-212	Bi-212
Water-ind.	0.000E+00	0.000E+00	0.000E+00	0.000E+00	0.000E+00	0.000E+00	0.000E+00	0.000E+00
Water-dep.	0.000E+00	0.000E+00	0.000E+00	0.000E+00	0.000E+00	0.000E+00	0.000E+00	0.000E+00
Total	0.000E+00	0.000E+00	0.000E+00	0.000E+00	0.000E+00	0.000E+00	0.000E+00	0.000E+00

Water-ind. == Water-independent Water-dep. == Water-dependent

Excess Cancer Risks CNRS(i,p,t) for Individual Radionuclides (i) and Pathways (p)
and Fraction of Total Risk at t= 1.000E+03 years

Water Independent Pathways (Inhalation excludes radon)

Radio-	Ground		Inhalation		Plant		Meat		Milk		Soil	
Nuclide	risk	fract.	risk	fract.	risk	fract.	risk	fract.	risk	fract.	risk	fract.
Cs-137	1.314E-16	0.0000	4.993E-22	0.0000	3.391E-18	0.0000	2.965E-19	0.0000	9.681E-20	0.0000	2.667E-20	0.0000
Pb-210	1.475E-09	0.0002	9.030E-10	0.0001	5.157E-07	0.0529	1.775E-09	0.0002	8.617E-10	0.0001	1.617E-08	0.0017
Ra-226	2.799E-06	0.2870	7.995E-10	0.0001	2.961E-07	0.0304	8.633E-10	0.0001	1.057E-09	0.0001	2.329E-09	0.0002
Sr-90	2.565E-21	0.0000	4.883E-24	0.0000	1.638E-19	0.0000	3.308E-21	0.0000	9.819E-22	0.0000	1.717E-22	0.0000
Total	2.801E-06	0.2871	1.703E-09	0.0002	8.117E-07	0.0832	2.639E-09	0.0003	1.919E-09	0.0002	1.850E-08	0.0019

Excess Cancer Risks CNRS(i,p,t) for Individual Radionuclides (i) and Pathways (p)
and Fraction of Total Risk at t= 1.000E+03 years

Water Dependent Pathways

Radio-	Water		Fish		Plant		Meat		Milk		All Pathways**	
Nuclide	risk	fract.	risk	fract.	risk	fract.	risk	fract.	risk	fract.	risk	fract.
Cs-137	0.000E+00	0.0000	0.000E+00	0.0000	0.000E+00	0.0000	0.000E+00	0.0000	0.000E+00	0.0000	1.352E-16	0.0000
Pb-210	4.931E-06	0.5055	1.337E-08	0.0014	1.255E-07	0.0129	1.398E-09	0.0001	1.145E-09	0.0001	5.609E-06	0.5750
Ra-226	1.016E-06	0.1042	8.231E-10	0.0001	2.688E-08	0.0028	3.707E-10	0.0000	8.110E-10	0.0001	4.146E-06	0.4250
Sr-90	7.891E-19	0.0000	5.156E-22	0.0000	2.148E-20	0.0000	2.235E-21	0.0000	1.219E-21	0.0000	9.853E-19	0.0000
Total	5.947E-06	0.6097	1.419E-08	0.0015	1.524E-07	0.0156	1.768E-09	0.0002	1.956E-09	0.0002	9.754E-06	1.0000

** Sum of water independent ground, inhalation, plant, meat, milk, soil
and water dependent water, fish, plant, meat, milk pathways

Excess Cancer Risks CNRS9(irn,i,t) and CNRS9W(irn,i,t) for Inhalation of
Radon and its Decay Products at t= 1.000E+03 years

Radon	Radionuclides							
Pathway	Rn-222	Po-218	Pb-214	Bi-214	Rn-220	Po-216	Pb-212	Bi-212
Water-ind.	0.000E+00	0.000E+00	0.000E+00	0.000E+00	0.000E+00	0.000E+00	0.000E+00	0.000E+00
Water-dep.	0.000E+00	0.000E+00	0.000E+00	0.000E+00	0.000E+00	0.000E+00	0.000E+00	0.000E+00
Total	0.000E+00	0.000E+00	0.000E+00	0.000E+00	0.000E+00	0.000E+00	0.000E+00	0.000E+00

Water-ind. == Water-independent Water-dep. == Water-dependent

Total Excess Cancer Risk CNRS(i,p,t)*** for Initially Existent Radionuclides (i) and Pathways (p)
and Fraction of Total Risk at t= 1.000E+03 years

Water Independent Pathways (Inhalation excludes radon)

Radio-	Ground		Inhalation		Radon		Plant		Meat		Milk		Soil	
Nuclide	risk	fract.	risk	fract.	risk	fract.	risk	fract.	risk	fract.	risk	fract.	risk	fract.
Cs-137	1.314E-16	0.0000	4.993E-22	0.0000	0.000E+00	0.0000	3.391E-18	0.0000	2.965E-19	0.0000	9.681E-20	0.0000	2.667E-20	0.0000
Pb-210	9.384E-23	0.0000	5.744E-23	0.0000	0.000E+00	0.0000	3.270E-20	0.0000	1.118E-22	0.0000	5.447E-23	0.0000	1.029E-21	0.0000
Ra-226	2.801E-06	0.2871	1.703E-09	0.0002	0.000E+00	0.0000	8.117E-07	0.0832	2.639E-09	0.0003	1.919E-09	0.0002	1.850E-08	0.0019
Sr-90	2.565E-21	0.0000	4.883E-24	0.0000	0.000E+00	0.0000	1.638E-19	0.0000	3.308E-21	0.0000	9.819E-22	0.0000	1.717E-22	0.0000
Total	2.801E-06	0.2871	1.703E-09	0.0002	0.000E+00	0.0000	8.117E-07	0.0832	2.639E-09	0.0003	1.919E-09	0.0002	1.850E-08	0.0019

Total Excess Cancer Risk CNRS(i,p,t)*** for Initially Existent Radionuclides (i) and Pathways (p)
and Fraction of Total Risk at t= 1.000E+03 years

Water Dependent Pathways

Radio-	Water		Fish		Radon		Plant		Meat		Milk		All pathways	
Nuclide	risk	fract.	risk	fract.	risk	fract.	risk	fract.	risk	fract.	risk	fract.	risk	fract.
Cs-137	0.000E+00	0.0000	0.000E+00	0.0000	0.000E+00	0.0000	0.000E+00	0.0000	0.000E+00	0.0000	0.000E+00	0.0000	1.352E-16	0.0000
Pb-210	8.379E-20	0.0000	2.273E-22	0.0000	0.000E+00	0.0000	2.131E-21	0.0000	2.368E-23	0.0000	1.944E-23	0.0000	1.202E-19	0.0000
Ra-226	5.947E-06	0.6097	1.419E-08	0.0015	0.000E+00	0.0000	1.524E-07	0.0156	1.768E-09	0.0002	1.956E-09	0.0002	9.754E-06	1.0000
Sr-90	7.891E-19	0.0000	5.156E-22	0.0000	0.000E+00	0.0000	2.148E-20	0.0000	2.235E-21	0.0000	1.219E-21	0.0000	9.853E-19	0.0000
Total	5.947E-06	0.6097	1.419E-08	0.0015	0.000E+00	0.0000	1.524E-07	0.0156	1.768E-09	0.0002	1.956E-09	0.0002	9.754E-06	1.0000

***CNRSI(i,p,t) includes contribution from decay daughter radionuclides

ATTACHMENT 5

TRENCH UNIT
RESRAD REPORT
(on CD only)

This page intentionally left blank.

Table of Contents

Part I: Mixture Sums and Single Radionuclide Guidelines

Dose Conversion Factor (and Related) Parameter Summary ... 2
Site-Specific Parameter Summary 4
Summary of Pathway Selections 8
Contaminated Zone and Total Dose Summary 9
Total Dose Components
Time = 0.000E+00 10
Time = 1.000E+00 11
Time = 3.000E+00 12
Time = 1.000E+01 13
Time = 3.000E+01 14
Time = 1.000E+02 15
Time = 3.000E+02 16
Time = 1.000E+03 17
Dose/Source Ratios Summed Over All Pathways 18
Single Radionuclide Soil Guidelines 18
Dose Per Nuclide Summed Over All Pathways 19
Soil Concentration Per Nuclide 19

Dose Conversion Factor (and Related) Parameter Summary
Dose Library: FGR 12 & FGR 11

Menu	Parameter	Current Value#	Base Case*	Parameter Name
A-1	DCF's for external ground radiation, (mrem/yr)/(pCi/g)			
A-1	At-218 (Source: FGR 12)	5.847E-03	5.847E-03	DCF1(1)
A-1	Ba-137m (Source: FGR 12)	3.606E+00	3.606E+00	DCF1(2)
A-1	Bi-210 (Source: FGR 12)	3.606E-03	3.606E-03	DCF1(3)
A-1	Bi-214 (Source: FGR 12)	9.808E+00	9.808E+00	DCF1(4)
A-1	Cs-137 (Source: FGR 12)	7.510E-04	7.510E-04	DCF1(5)
A-1	Pb-210 (Source: FGR 12)	2.447E-03	2.447E-03	DCF1(6)
A-1	Pb-214 (Source: FGR 12)	1.341E+00	1.341E+00	DCF1(7)
A-1	Po-210 (Source: FGR 12)	5.231E-05	5.231E-05	DCF1(8)
A-1	Po-214 (Source: FGR 12)	5.138E-04	5.138E-04	DCF1(9)
A-1	Po-218 (Source: FGR 12)	5.642E-05	5.642E-05	DCF1(10)
A-1	Ra-226 (Source: FGR 12)	3.176E-02	3.176E-02	DCF1(11)
A-1	Rn-222 (Source: FGR 12)	2.354E-03	2.354E-03	DCF1(12)
A-1	Sr-90 (Source: FGR 12)	7.043E-04	7.043E-04	DCF1(13)
A-1	Tl-210 (Source: no data)	0.000E+00	-2.000E+00	DCF1(14)
A-1	Y-90 (Source: FGR 12)	2.391E-02	2.391E-02	DCF1(15)
B-1	Dose conversion factors for inhalation, mrem/pCi:			
B-1	Cs-137+D	3.190E-05	3.190E-05	DCF2(1)
B-1	Pb-210+D	2.320E-02	1.360E-02	DCF2(2)
B-1	Ra-226+D	8.594E-03	8.580E-03	DCF2(3)
B-1	Sr-90+D	1.308E-03	1.300E-03	DCF2(4)
D-1	Dose conversion factors for ingestion, mrem/pCi:			
D-1	Cs-137+D	5.000E-05	5.000E-05	DCF3(1)
D-1	Pb-210+D	7.276E-03	5.370E-03	DCF3(2)
D-1	Ra-226+D	1.321E-03	1.320E-03	DCF3(3)
D-1	Sr-90+D	1.528E-04	1.420E-04	DCF3(4)
D-34	Food transfer factors:			
D-34	Cs-137+D , plant/soil concentration ratio, dimensionless	4.000E-02	4.000E-02	RTF(1,1)
D-34	Cs-137+D , beef/livestock-intake ratio, (pCi/kg)/(pCi/d)	3.000E-02	3.000E-02	RTF(1,2)
D-34	Cs-137+D , milk/livestock-intake ratio, (pCi/L)/(pCi/d)	8.000E-03	8.000E-03	RTF(1,3)
D-34				
D-34	Pb-210+D , plant/soil concentration ratio, dimensionless	1.000E-02	1.000E-02	RTF(2,1)
D-34	Pb-210+D , beef/livestock-intake ratio, (pCi/kg)/(pCi/d)	8.000E-04	8.000E-04	RTF(2,2)
D-34	Pb-210+D , milk/livestock-intake ratio, (pCi/L)/(pCi/d)	3.000E-04	3.000E-04	RTF(2,3)
D-34				
D-34	Ra-226+D , plant/soil concentration ratio, dimensionless	4.000E-02	4.000E-02	RTF(3,1)
D-34	Ra-226+D , beef/livestock-intake ratio, (pCi/kg)/(pCi/d)	1.000E-03	1.000E-03	RTF(3,2)
D-34	Ra-226+D , milk/livestock-intake ratio, (pCi/L)/(pCi/d)	1.000E-03	1.000E-03	RTF(3,3)
D-34				
D-34	Sr-90+D , plant/soil concentration ratio, dimensionless	3.000E-01	3.000E-01	RTF(4,1)
D-34	Sr-90+D , beef/livestock-intake ratio, (pCi/kg)/(pCi/d)	8.000E-03	8.000E-03	RTF(4,2)
D-34	Sr-90+D , milk/livestock-intake ratio, (pCi/L)/(pCi/d)	2.000E-03	2.000E-03	RTF(4,3)
D-5	Bioaccumulation factors, fresh water, L/kg:			
D-5	Cs-137+D , fish	2.000E+03	2.000E+03	BIOFAC(1,1)
D-5	Cs-137+D , crustacea and mollusks	1.000E+02	1.000E+02	BIOFAC(1,2)
D-5				

Dose Conversion Factor (and Related) Parameter Summary (continued)
Dose Library: FGR 12 & FGR 11

Menu	Parameter	Current Value#	Base Case*	Parameter Name
D-5	Pb-210+D , fish	3.000E+02	3.000E+02	BIOFAC(2,1)
D-5	Pb-210+D , crustacea and mollusks	1.000E+02	1.000E+02	BIOFAC(2,2)
D-5				
D-5	Ra-226+D , fish	5.000E+01	5.000E+01	BIOFAC(3,1)
D-5	Ra-226+D , crustacea and mollusks	2.500E+02	2.500E+02	BIOFAC(3,2)
D-5				
D-5	Sr-90+D , fish	6.000E+01	6.000E+01	BIOFAC(4,1)
D-5	Sr-90+D , crustacea and mollusks	1.000E+02	1.000E+02	BIOFAC(4,2)

#For DCF1(xxx) only, factors are for infinite depth & area. See ETFG table in Ground Pathway of Detailed Report.
*Base Case means Default.Lib w/o Associate Nuclide contributions.

Site-Specific Parameter Summary

Menu	Parameter	User Input	Default	Used by RESRAD (If different from user input)	Parameter Name
R011	Area of contaminated zone (m**2)	2.550E+02	1.000E+04	---	AREA
R011	Thickness of contaminated zone (m)	2.000E+00	2.000E+00	---	THICK0
R011	Fraction of contamination that is submerged	0.000E+00	0.000E+00	---	SUBMFRACT
R011	Length parallel to aquifer flow (m)	1.000E+02	1.000E+02	---	LCZPAQ
R011	Basic radiation dose limit (mrem/yr)	2.500E+01	3.000E+01	---	BRDL
R011	Time since placement of material (yr)	0.000E+00	0.000E+00	---	TI
R011	Times for calculations (yr)	1.000E+00	1.000E+00	---	T(2)
R011	Times for calculations (yr)	3.000E+00	3.000E+00	---	T(3)
R011	Times for calculations (yr)	1.000E+01	1.000E+01	---	T(4)
R011	Times for calculations (yr)	3.000E+01	3.000E+01	---	T(5)
R011	Times for calculations (yr)	1.000E+02	1.000E+02	---	T(6)
R011	Times for calculations (yr)	3.000E+02	3.000E+02	---	T(7)
R011	Times for calculations (yr)	1.000E+03	1.000E+03	---	T(8)
R011	Times for calculations (yr)	not used	0.000E+00	---	T(9)
R011	Times for calculations (yr)	not used	0.000E+00	---	T(10)
R012	Initial principal radionuclide (pCi/g): Cs-137	5.700E-02	0.000E+00	---	S1(1)
R012	Initial principal radionuclide (pCi/g): Pb-210	2.600E-01	0.000E+00	---	S1(2)
R012	Initial principal radionuclide (pCi/g): Ra-226	2.600E-01	0.000E+00	---	S1(3)
R012	Initial principal radionuclide (pCi/g): Sr-90	1.700E-01	0.000E+00	---	S1(4)
R012	Concentration in groundwater (pCi/L): Cs-137	not used	0.000E+00	---	W1(1)
R012	Concentration in groundwater (pCi/L): Pb-210	not used	0.000E+00	---	W1(2)
R012	Concentration in groundwater (pCi/L): Ra-226	not used	0.000E+00	---	W1(3)
R012	Concentration in groundwater (pCi/L): Sr-90	not used	0.000E+00	---	W1(4)
R013	Cover depth (m)	0.000E+00	0.000E+00	---	COVER0
R013	Density of cover material (g/cm**3)	not used	1.500E+00	---	DENSCV
R013	Cover depth erosion rate (m/yr)	not used	1.000E-03	---	VCV
R013	Density of contaminated zone (g/cm**3)	1.500E+00	1.500E+00	---	DENSCZ
R013	Contaminated zone erosion rate (m/yr)	1.000E-03	1.000E-03	---	VCZ
R013	Contaminated zone total porosity	4.000E-01	4.000E-01	---	TPCZ
R013	Contaminated zone field capacity	2.000E-01	2.000E-01	---	FCCZ
R013	Contaminated zone hydraulic conductivity (m/yr)	1.000E+01	1.000E+01	---	HCCZ
R013	Contaminated zone b parameter	5.300E+00	5.300E+00	---	BCZ
R013	Average annual wind speed (m/sec)	2.000E+00	2.000E+00	---	WIND
R013	Humidity in air (g/m**3)	not used	8.000E+00	---	HUMID
R013	Evapotranspiration coefficient	5.000E-01	5.000E-01	---	EVAPTR
R013	Precipitation (m/yr)	1.000E+00	1.000E+00	---	PRECIP
R013	Irrigation (m/yr)	2.000E-01	2.000E-01	---	RI
R013	Irrigation mode	overhead	overhead	---	IDITCH
R013	Runoff coefficient	2.000E-01	2.000E-01	---	RUNOFF
R013	Watershed area for nearby stream or pond (m**2)	1.000E+06	1.000E+06	---	WAREA
R013	Accuracy for water/soil computations	1.000E-03	1.000E-03	---	EPS
R014	Density of saturated zone (g/cm**3)	1.500E+00	1.500E+00	---	DENSAQ
R014	Saturated zone total porosity	4.000E-01	4.000E-01	---	TPSZ
R014	Saturated zone effective porosity	2.000E-01	2.000E-01	---	EPSZ
R014	Saturated zone field capacity	2.000E-01	2.000E-01	---	FCSZ
R014	Saturated zone hydraulic conductivity (m/yr)	1.000E+02	1.000E+02	---	HCSZ
R014	Saturated zone hydraulic gradient	2.000E-02	2.000E-02	---	HGWT

Site-Specific Parameter Summary (continued)

Menu	Parameter	User Input	Default	Used by RESRAD (If different from user input)	Parameter Name
R014	Saturated zone b parameter	5.300E+00	5.300E+00	---	BSZ
R014	Water table drop rate (m/yr)	1.000E-03	1.000E-03	---	VWT
R014	Well pump intake depth (m below water table)	1.000E+01	1.000E+01	---	DWIBWT
R014	Model: Nondispersion (ND) or Mass-Balance (MB)	ND	ND	---	MODEL
R014	Well pumping rate (m**3/yr)	2.500E+02	2.500E+02	---	UW
R015	Number of unsaturated zone strata	1	1	---	NS
R015	Unsat. zone 1, thickness (m)	4.000E+00	4.000E+00	---	H(1)
R015	Unsat. zone 1, soil density (g/cm**3)	1.500E+00	1.500E+00	---	DENSUZ(1)
R015	Unsat. zone 1, total porosity	4.000E-01	4.000E-01	---	TPUZ(1)
R015	Unsat. zone 1, effective porosity	2.000E-01	2.000E-01	---	EPUZ(1)
R015	Unsat. zone 1, field capacity	2.000E-01	2.000E-01	---	FCUZ(1)
R015	Unsat. zone 1, soil-specific b parameter	5.300E+00	5.300E+00	---	BUZ(1)
R015	Unsat. zone 1, hydraulic conductivity (m/yr)	1.000E+01	1.000E+01	---	HCUZ(1)
R016	Distribution coefficients for Cs-137				
R016	Contaminated zone (cm**3/g)	4.600E+03	4.600E+03	---	DCNUCC(1)
R016	Unsaturated zone 1 (cm**3/g)	4.600E+03	4.600E+03	---	DCNUCU(1,1)
R016	Saturated zone (cm**3/g)	4.600E+03	4.600E+03	---	DCNUCS(1)
R016	Leach rate (/yr)	0.000E+00	0.000E+00	3.623E-05	ALEACH(1)
R016	Solubility constant	0.000E+00	0.000E+00	not used	SOLUBK(1)
R016	Distribution coefficients for Pb-210				
R016	Contaminated zone (cm**3/g)	1.000E+02	1.000E+02	---	DCNUCC(2)
R016	Unsaturated zone 1 (cm**3/g)	1.000E+02	1.000E+02	---	DCNUCU(2,1)
R016	Saturated zone (cm**3/g)	1.000E+02	1.000E+02	---	DCNUCS(2)
R016	Leach rate (/yr)	0.000E+00	0.000E+00	1.663E-03	ALEACH(2)
R016	Solubility constant	0.000E+00	0.000E+00	not used	SOLUBK(2)
R016	Distribution coefficients for Ra-226				
R016	Contaminated zone (cm**3/g)	7.000E+01	7.000E+01	---	DCNUCC(3)
R016	Unsaturated zone 1 (cm**3/g)	7.000E+01	7.000E+01	---	DCNUCU(3,1)
R016	Saturated zone (cm**3/g)	7.000E+01	7.000E+01	---	DCNUCS(3)
R016	Leach rate (/yr)	0.000E+00	0.000E+00	2.374E-03	ALEACH(3)
R016	Solubility constant	0.000E+00	0.000E+00	not used	SOLUBK(3)
R016	Distribution coefficients for Sr-90				
R016	Contaminated zone (cm**3/g)	3.000E+01	3.000E+01	---	DCNUCC(4)
R016	Unsaturated zone 1 (cm**3/g)	3.000E+01	3.000E+01	---	DCNUCU(4,1)
R016	Saturated zone (cm**3/g)	3.000E+01	3.000E+01	---	DCNUCS(4)
R016	Leach rate (/yr)	0.000E+00	0.000E+00	5.516E-03	ALEACH(4)
R016	Solubility constant	0.000E+00	0.000E+00	not used	SOLUBK(4)
R017	Inhalation rate (m**3/yr)	8.400E+03	8.400E+03	---	INHALR
R017	Mass loading for inhalation (g/m**3)	1.000E-04	1.000E-04	---	MLINH
R017	Exposure duration	3.000E+01	3.000E+01	---	ED
R017	Shielding factor, inhalation	4.000E-01	4.000E-01	---	SHF3
R017	Shielding factor, external gamma	7.000E-01	7.000E-01	---	SHF1
R017	Fraction of time spent indoors	5.000E-01	5.000E-01	---	FIND
R017	Fraction of time spent outdoors (on site)	2.500E-01	2.500E-01	---	FOTD

Site-Specific Parameter Summary (continued)

Menu	Parameter	User Input	Default	Used by RESRAD (If different from user input)	Parameter Name
R017	Shape factor flag, external gamma	1.000E+00	1.000E+00	>0 shows circular AREA.	FS
R017	Radii of shape factor array (used if FS = -1):				
R017	Outer annular radius (m), ring 1:	not used	5.000E+01	---	RAD_SHAPE(1)
R017	Outer annular radius (m), ring 2:	not used	7.071E+01	---	RAD_SHAPE(2)
R017	Outer annular radius (m), ring 3:	not used	0.000E+00	---	RAD_SHAPE(3)
R017	Outer annular radius (m), ring 4:	not used	0.000E+00	---	RAD_SHAPE(4)
R017	Outer annular radius (m), ring 5:	not used	0.000E+00	---	RAD_SHAPE(5)
R017	Outer annular radius (m), ring 6:	not used	0.000E+00	---	RAD_SHAPE(6)
R017	Outer annular radius (m), ring 7:	not used	0.000E+00	---	RAD_SHAPE(7)
R017	Outer annular radius (m), ring 8:	not used	0.000E+00	---	RAD_SHAPE(8)
R017	Outer annular radius (m), ring 9:	not used	0.000E+00	---	RAD_SHAPE(9)
R017	Outer annular radius (m), ring 10:	not used	0.000E+00	---	RAD_SHAPE(10)
R017	Outer annular radius (m), ring 11:	not used	0.000E+00	---	RAD_SHAPE(11)
R017	Outer annular radius (m), ring 12:	not used	0.000E+00	---	RAD_SHAPE(12)
R017	Fractions of annular areas within AREA:				
R017	Ring 1	not used	1.000E+00	---	FRACA(1)
R017	Ring 2	not used	2.732E-01	---	FRACA(2)
R017	Ring 3	not used	0.000E+00	---	FRACA(3)
R017	Ring 4	not used	0.000E+00	---	FRACA(4)
R017	Ring 5	not used	0.000E+00	---	FRACA(5)
R017	Ring 6	not used	0.000E+00	---	FRACA(6)
R017	Ring 7	not used	0.000E+00	---	FRACA(7)
R017	Ring 8	not used	0.000E+00	---	FRACA(8)
R017	Ring 9	not used	0.000E+00	---	FRACA(9)
R017	Ring 10	not used	0.000E+00	---	FRACA(10)
R017	Ring 11	not used	0.000E+00	---	FRACA(11)
R017	Ring 12	not used	0.000E+00	---	FRACA(12)
R018	Fruits, vegetables and grain consumption (kg/yr)	1.600E+02	1.600E+02	---	DIET(1)
R018	Leafy vegetable consumption (kg/yr)	1.400E+01	1.400E+01	---	DIET(2)
R018	Milk consumption (L/yr)	9.200E+01	9.200E+01	---	DIET(3)
R018	Meat and poultry consumption (kg/yr)	6.300E+01	6.300E+01	---	DIET(4)
R018	Fish consumption (kg/yr)	5.400E+00	5.400E+00	---	DIET(5)
R018	Other seafood consumption (kg/yr)	9.000E-01	9.000E-01	---	DIET(6)
R018	Soil ingestion rate (g/yr)	3.650E+01	3.650E+01	---	SOIL
R018	Drinking water intake (L/yr)	5.100E+02	5.100E+02	---	DWI
R018	Contamination fraction of drinking water	1.000E+00	1.000E+00	---	FDW
R018	Contamination fraction of household water	not used	1.000E+00	---	FHHW
R018	Contamination fraction of livestock water	1.000E+00	1.000E+00	---	FLW
R018	Contamination fraction of irrigation water	1.000E+00	1.000E+00	---	FIRW
R018	Contamination fraction of aquatic food	5.000E-01	5.000E-01	---	FR9
R018	Contamination fraction of plant food	-1	-1	0.128E+00	FPLANT
R018	Contamination fraction of meat	-1	-1	0.127E-01	FMEAT
R018	Contamination fraction of milk	-1	-1	0.127E-01	FMILK
R019	Livestock fodder intake for meat (kg/day)	6.800E+01	6.800E+01	---	LFI5
R019	Livestock fodder intake for milk (kg/day)	5.500E+01	5.500E+01	---	LFI6
R019	Livestock water intake for meat (L/day)	5.000E+01	5.000E+01	---	LWI5
R019	Livestock water intake for milk (L/day)	1.600E+02	1.600E+02	---	LWI6

Site-Specific Parameter Summary (continued)

Menu	Parameter	User Input	Default	Used by RESRAD (If different from user input)	Parameter Name
R019	Livestock soil intake (kg/day)	5.000E-01	5.000E-01	---	LSI
R019	Mass loading for foliar deposition (g/m**3)	1.000E-04	1.000E-04	---	MLFD
R019	Depth of soil mixing layer (m)	1.500E-01	1.500E-01	---	DM
R019	Depth of roots (m)	9.000E-01	9.000E-01	---	DROOT
R019	Drinking water fraction from ground water	1.000E+00	1.000E+00	---	FGWDW
R019	Household water fraction from ground water	not used	1.000E+00	---	FGWHH
R019	Livestock water fraction from ground water	1.000E+00	1.000E+00	---	FGWLW
R019	Irrigation fraction from ground water	1.000E+00	1.000E+00	---	FGWIR
R19B	Wet weight crop yield for Non-Leafy (kg/m**2)	7.000E-01	7.000E-01	---	YV(1)
R19B	Wet weight crop yield for Leafy (kg/m**2)	1.500E+00	1.500E+00	---	YV(2)
R19B	Wet weight crop yield for Fodder (kg/m**2)	1.100E+00	1.100E+00	---	YV(3)
R19B	Growing Season for Non-Leafy (years)	1.700E-01	1.700E-01	---	TE(1)
R19B	Growing Season for Leafy (years)	2.500E-01	2.500E-01	---	TE(2)
R19B	Growing Season for Fodder (years)	8.000E-02	8.000E-02	---	TE(3)
R19B	Translocation Factor for Non-Leafy	1.000E-01	1.000E-01	---	TIV(1)
R19B	Translocation Factor for Leafy	1.000E+00	1.000E+00	---	TIV(2)
R19B	Translocation Factor for Fodder	1.000E+00	1.000E+00	---	TIV(3)
R19B	Dry Foliar Interception Fraction for Non-Leafy	2.500E-01	2.500E-01	---	RDRY(1)
R19B	Dry Foliar Interception Fraction for Leafy	2.500E-01	2.500E-01	---	RDRY(2)
R19B	Dry Foliar Interception Fraction for Fodder	2.500E-01	2.500E-01	---	RDRY(3)
R19B	Wet Foliar Interception Fraction for Non-Leafy	2.500E-01	2.500E-01	---	RWET(1)
R19B	Wet Foliar Interception Fraction for Leafy	2.500E-01	2.500E-01	---	RWET(2)
R19B	Wet Foliar Interception Fraction for Fodder	2.500E-01	2.500E-01	---	RWET(3)
R19B	Weathering Removal Constant for Vegetation	2.000E+01	2.000E+01	---	WLAM
C14	C-12 concentration in water (g/cm**3)	not used	2.000E-05	---	C12WTR
C14	C-12 concentration in contaminated soil (g/g)	not used	3.000E-02	---	C12CZ
C14	Fraction of vegetation carbon from soil	not used	2.000E-02	---	CSOIL
C14	Fraction of vegetation carbon from air	not used	9.800E-01	---	CAIR
C14	C-14 evasion layer thickness in soil (m)	not used	3.000E-01	---	DMC
C14	C-14 evasion flux rate from soil (1/sec)	not used	7.000E-07	---	EVSN
C14	C-12 evasion flux rate from soil (1/sec)	not used	1.000E-10	---	REVSN
C14	Fraction of grain in beef cattle feed	not used	8.000E-01	---	AVFG4
C14	Fraction of grain in milk cow feed	not used	2.000E-01	---	AVFG5
STOR	Storage times of contaminated foodstuffs (days):				
STOR	Fruits, non-leafy vegetables, and grain	1.400E+01	1.400E+01	---	STOR_T(1)
STOR	Leafy vegetables	1.000E+00	1.000E+00	---	STOR_T(2)
STOR	Milk	1.000E+00	1.000E+00	---	STOR_T(3)
STOR	Meat and poultry	2.000E+01	2.000E+01	---	STOR_T(4)
STOR	Fish	7.000E+00	7.000E+00	---	STOR_T(5)
STOR	Crustacea and mollusks	7.000E+00	7.000E+00	---	STOR_T(6)
STOR	Well water	1.000E+00	1.000E+00	---	STOR_T(7)
STOR	Surface water	1.000E+00	1.000E+00	---	STOR_T(8)
STOR	Livestock fodder	4.500E+01	4.500E+01	---	STOR_T(9)
R021	Thickness of building foundation (m)	not used	1.500E-01	---	FLOOR1
R021	Bulk density of building foundation (g/cm**3)	not used	2.400E+00	---	DENSFL
R021	Total porosity of the cover material	not used	4.000E-01	---	TPCV

Site-Specific Parameter Summary (continued)

Menu	Parameter	User Input	Default	Used by RESRAD (If different from user input)	Parameter Name
R021	Total porosity of the building foundation	not used	1.000E-01	---	TPFL
R021	Volumetric water content of the cover material	not used	5.000E-02	---	PH2OCV
R021	Volumetric water content of the foundation	not used	3.000E-02	---	PH2OFL
R021	Diffusion coefficient for radon gas (m/sec):				
R021	in cover material	not used	2.000E-06	---	DIFCV
R021	in foundation material	not used	3.000E-07	---	DIFFL
R021	in contaminated zone soil	not used	2.000E-06	---	DIFCZ
R021	Radon vertical dimension of mixing (m)	not used	2.000E+00	---	HMIX
R021	Average building air exchange rate (1/hr)	not used	5.000E-01	---	REXG
R021	Height of the building (room) (m)	not used	2.500E+00	---	HRM
R021	Building interior area factor	not used	0.000E+00	---	FAI
R021	Building depth below ground surface (m)	not used	-1.000E+00	---	DMFL
R021	Emanating power of Rn-222 gas	not used	2.500E-01	---	EMANA(1)
R021	Emanating power of Rn-220 gas	not used	1.500E-01	---	EMANA(2)
TITL	Number of graphical time points	32	---	---	NPTS
TITL	Maximum number of integration points for dose	17	---	---	LYMAX
TITL	Maximum number of integration points for risk	257	---	---	KYMAX

Summary of Pathway Selections

Pathway	User Selection
1 -- external gamma	active
2 -- inhalation (w/o radon)	active
3 -- plant ingestion	active
4 -- meat ingestion	active
5 -- milk ingestion	active
6 -- aquatic foods	active
7 -- drinking water	active
8 -- soil ingestion	active
9 -- radon	suppressed
Find peak pathway doses	suppressed

Contaminated Zone Dimensions		Initial Soil Concentrations, pCi/g	
Area:	255.00 square meters	Cs-137	5.700E-02
Thickness:	2.00 meters	Pb-210	2.600E-01
Cover Depth:	0.00 meters	Ra-226	2.600E-01
		Sr-90	1.700E-01

Total Dose TDOSE(t), mrem/yr
Basic Radiation Dose Limit = 2.500E+01 mrem/yr
Total Mixture Sum M(t) = Fraction of Basic Dose Limit Received at Time (t)

t (years):	0.000E+00	1.000E+00	3.000E+00	1.000E+01	3.000E+01	1.000E+02	3.000E+02	1.000E+03
TDOSE(t):	2.501E+00	2.488E+00	2.462E+00	2.378E+00	2.177E+00	1.711E+00	9.653E-01	5.358E-01
M(t):	1.000E-01	9.952E-02	9.849E-02	9.512E-02	8.707E-02	6.843E-02	3.861E-02	2.143E-02

Maximum TDOSE(t): 2.501E+00 mrem/yr at t = 0.000E+00 years

Total Dose Contributions TDOSE(i,p,t) for Individual Radionuclides (i) and Pathways (p)
As mrem/yr and Fraction of Total Dose At t = 0.000E+00 years

Water Independent Pathways (Inhalation excludes radon)

Radio-	Ground		Inhalation		Radon		Plant		Meat		Milk		Soil	
Nuclide	mrem/yr	fract.	mrem/yr	fract.	mrem/yr	fract.	mrem/yr	fract.	mrem/yr	fract.	mrem/yr	fract.	mrem/yr	fract.
Cs-137	9.715E-02	0.0388	7.843E-08	0.0000	0.000E+00	0.0000	2.500E-03	0.0010	2.186E-04	0.0001	7.139E-05	0.0000	1.967E-05	0.0000
Pb-210	8.147E-04	0.0003	2.589E-04	0.0001	0.000E+00	0.0000	4.130E-01	0.1651	1.412E-03	0.0006	6.879E-04	0.0003	1.299E-02	0.0052
Ra-226	1.478E+00	0.5910	1.014E-04	0.0000	0.000E+00	0.0000	3.120E-01	0.1248	9.225E-04	0.0004	1.101E-03	0.0004	2.597E-03	0.0010
Sr-90	2.092E-03	0.0008	9.565E-06	0.0000	0.000E+00	0.0000	1.704E-01	0.0681	3.441E-03	0.0014	1.022E-03	0.0004	1.787E-04	0.0001
Total	1.578E+00	0.6310	3.700E-04	0.0001	0.000E+00	0.0000	8.979E-01	0.3590	5.994E-03	0.0024	2.882E-03	0.0012	1.579E-02	0.0063

Total Dose Contributions TDOSE(i,p,t) for Individual Radionuclides (i) and Pathways (p)
As mrem/yr and Fraction of Total Dose At t = 0.000E+00 years

Water Dependent Pathways

Radio-	Water		Fish		Radon		Plant		Meat		Milk		All Pathways*	
Nuclide	mrem/yr	fract.	mrem/yr	fract.	mrem/yr	fract.	mrem/yr	fract.	mrem/yr	fract.	mrem/yr	fract.	mrem/yr	fract.
Cs-137	0.000E+00	0.0000	0.000E+00	0.0000	0.000E+00	0.0000	0.000E+00	0.0000	0.000E+00	0.0000	0.000E+00	0.0000	9.996E-02	0.0400
Pb-210	0.000E+00	0.0000	0.000E+00	0.0000	0.000E+00	0.0000	0.000E+00	0.0000	0.000E+00	0.0000	0.000E+00	0.0000	4.291E-01	0.1716
Ra-226	0.000E+00	0.0000	0.000E+00	0.0000	0.000E+00	0.0000	0.000E+00	0.0000	0.000E+00	0.0000	0.000E+00	0.0000	1.795E+00	0.7176
Sr-90	0.000E+00	0.0000	0.000E+00	0.0000	0.000E+00	0.0000	0.000E+00	0.0000	0.000E+00	0.0000	0.000E+00	0.0000	1.771E-01	0.0708
Total	0.000E+00	0.0000	0.000E+00	0.0000	0.000E+00	0.0000	0.000E+00	0.0000	0.000E+00	0.0000	0.000E+00	0.0000	2.501E+00	1.0000

*Sum of all water independent and dependent pathways.

Total Dose Contributions TDOSE(i,p,t) for Individual Radionuclides (i) and Pathways (p)
As mrem/yr and Fraction of Total Dose At t = 1.000E+00 years

Water Independent Pathways (Inhalation excludes radon)

Radio-	Ground		Inhalation		Radon		Plant		Meat		Milk		Soil	
Nuclide	mrem/yr	fract.	mrem/yr	fract.	mrem/yr	fract.	mrem/yr	fract.	mrem/yr	fract.	mrem/yr	fract.	mrem/yr	fract.
Cs-137	9.493E-02	0.0382	7.664E-08	0.0000	0.000E+00	0.0000	2.443E-03	0.0010	2.136E-04	0.0001	6.975E-05	0.0000	1.922E-05	0.0000
Pb-210	7.885E-04	0.0003	2.506E-04	0.0001	0.000E+00	0.0000	3.997E-01	0.1606	1.366E-03	0.0005	6.657E-04	0.0003	1.257E-02	0.0051
Ra-226	1.474E+00	0.5924	1.090E-04	0.0000	0.000E+00	0.0000	3.239E-01	0.1302	9.653E-04	0.0004	1.120E-03	0.0005	2.986E-03	0.0012
Sr-90	2.032E-03	0.0008	9.289E-06	0.0000	0.000E+00	0.0000	1.655E-01	0.0665	3.342E-03	0.0013	9.921E-04	0.0004	1.735E-04	0.0001
Total	1.572E+00	0.6317	3.690E-04	0.0001	0.000E+00	0.0000	8.915E-01	0.3583	5.887E-03	0.0024	2.847E-03	0.0011	1.575E-02	0.0063

Total Dose Contributions TDOSE(i,p,t) for Individual Radionuclides (i) and Pathways (p)
As mrem/yr and Fraction of Total Dose At t = 1.000E+00 years

Water Dependent Pathways

Radio-	Water		Fish		Radon		Plant		Meat		Milk		All Pathways*	
Nuclide	mrem/yr	fract.	mrem/yr	fract.	mrem/yr	fract.	mrem/yr	fract.	mrem/yr	fract.	mrem/yr	fract.	mrem/yr	fract.
Cs-137	0.000E+00	0.0000	0.000E+00	0.0000	0.000E+00	0.0000	0.000E+00	0.0000	0.000E+00	0.0000	0.000E+00	0.0000	9.768E-02	0.0393
Pb-210	0.000E+00	0.0000	0.000E+00	0.0000	0.000E+00	0.0000	0.000E+00	0.0000	0.000E+00	0.0000	0.000E+00	0.0000	4.153E-01	0.1669
Ra-226	0.000E+00	0.0000	0.000E+00	0.0000	0.000E+00	0.0000	0.000E+00	0.0000	0.000E+00	0.0000	0.000E+00	0.0000	1.803E+00	0.7247
Sr-90	0.000E+00	0.0000	0.000E+00	0.0000	0.000E+00	0.0000	0.000E+00	0.0000	0.000E+00	0.0000	0.000E+00	0.0000	1.720E-01	0.0691
Total	0.000E+00	0.0000	0.000E+00	0.0000	0.000E+00	0.0000	0.000E+00	0.0000	0.000E+00	0.0000	0.000E+00	0.0000	2.488E+00	1.0000

*Sum of all water independent and dependent pathways.

Total Dose Contributions TDOSE(i,p,t) for Individual Radionuclides (i) and Pathways (p)
As mrem/yr and Fraction of Total Dose At t = 3.000E+00 years

Water Independent Pathways (Inhalation excludes radon)

Radio-	Ground		Inhalation		Radon		Plant		Meat		Milk		Soil	
Nuclide	mrem/yr	fract.	mrem/yr	fract.	mrem/yr	fract.	mrem/yr	fract.	mrem/yr	fract.	mrem/yr	fract.	mrem/yr	fract.
Cs-137	9.064E-02	0.0368	7.317E-08	0.0000	0.000E+00	0.0000	2.332E-03	0.0009	2.040E-04	0.0001	6.660E-05	0.0000	1.835E-05	0.0000
Pb-210	7.385E-04	0.0003	2.347E-04	0.0001	0.000E+00	0.0000	3.743E-01	0.1520	1.280E-03	0.0005	6.235E-04	0.0003	1.178E-02	0.0048
Ra-226	1.466E+00	0.5952	1.235E-04	0.0001	0.000E+00	0.0000	3.461E-01	0.1406	1.042E-03	0.0004	1.153E-03	0.0005	3.724E-03	0.0015
Sr-90	1.916E-03	0.0008	8.760E-06	0.0000	0.000E+00	0.0000	1.561E-01	0.0634	3.152E-03	0.0013	9.356E-04	0.0004	1.636E-04	0.0001
Total	1.559E+00	0.6331	3.670E-04	0.0001	0.000E+00	0.0000	8.788E-01	0.3569	5.677E-03	0.0023	2.779E-03	0.0011	1.568E-02	0.0064

Total Dose Contributions TDOSE(i,p,t) for Individual Radionuclides (i) and Pathways (p)
As mrem/yr and Fraction of Total Dose At t = 3.000E+00 years

Water Dependent Pathways

Radio-	Water		Fish		Radon		Plant		Meat		Milk		All Pathways*	
Nuclide	mrem/yr	fract.	mrem/yr	fract.	mrem/yr	fract.	mrem/yr	fract.	mrem/yr	fract.	mrem/yr	fract.	mrem/yr	fract.
Cs-137	0.000E+00	0.0000	0.000E+00	0.0000	0.000E+00	0.0000	0.000E+00	0.0000	0.000E+00	0.0000	0.000E+00	0.0000	9.326E-02	0.0379
Pb-210	0.000E+00	0.0000	0.000E+00	0.0000	0.000E+00	0.0000	0.000E+00	0.0000	0.000E+00	0.0000	0.000E+00	0.0000	3.890E-01	0.1580
Ra-226	0.000E+00	0.0000	0.000E+00	0.0000	0.000E+00	0.0000	0.000E+00	0.0000	0.000E+00	0.0000	0.000E+00	0.0000	1.818E+00	0.7382
Sr-90	0.000E+00	0.0000	0.000E+00	0.0000	0.000E+00	0.0000	0.000E+00	0.0000	0.000E+00	0.0000	0.000E+00	0.0000	1.622E-01	0.0659
Total	0.000E+00	0.0000	0.000E+00	0.0000	0.000E+00	0.0000	0.000E+00	0.0000	0.000E+00	0.0000	0.000E+00	0.0000	2.462E+00	1.0000

*Sum of all water independent and dependent pathways.

Total Dose Contributions TDOSE(i,p,t) for Individual Radionuclides (i) and Pathways (p)
As mrem/yr and Fraction of Total Dose At t = 1.000E+01 years

Water Independent Pathways (Inhalation excludes radon)

Radio-	Ground		Inhalation		Radon		Plant		Meat		Milk		Soil	
Nuclide	mrem/yr	fract.	mrem/yr	fract.	mrem/yr	fract.	mrem/yr	fract.	mrem/yr	fract.	mrem/yr	fract.	mrem/yr	fract.
Cs-137	7.708E-02	0.0324	6.223E-08	0.0000	0.000E+00	0.0000	1.984E-03	0.0008	1.735E-04	0.0001	5.664E-05	0.0000	1.560E-05	0.0000
Pb-210	5.872E-04	0.0002	1.866E-04	0.0001	0.000E+00	0.0000	2.976E-01	0.1252	1.018E-03	0.0004	4.958E-04	0.0002	9.364E-03	0.0039
Ra-226	1.437E+00	0.6044	1.662E-04	0.0001	0.000E+00	0.0000	4.114E-01	0.1730	1.268E-03	0.0005	1.251E-03	0.0005	5.918E-03	0.0025
Sr-90	1.561E-03	0.0007	7.135E-06	0.0000	0.000E+00	0.0000	1.271E-01	0.0535	2.567E-03	0.0011	7.620E-04	0.0003	1.333E-04	0.0001
Total	1.516E+00	0.6377	3.600E-04	0.0002	0.000E+00	0.0000	8.382E-01	0.3525	5.026E-03	0.0021	2.566E-03	0.0011	1.543E-02	0.0065

Total Dose Contributions TDOSE(i,p,t) for Individual Radionuclides (i) and Pathways (p)
As mrem/yr and Fraction of Total Dose At t = 1.000E+01 years

Water Dependent Pathways

Radio-	Water		Fish		Radon		Plant		Meat		Milk		All Pathways*	
Nuclide	mrem/yr	fract.	mrem/yr	fract.	mrem/yr	fract.	mrem/yr	fract.	mrem/yr	fract.	mrem/yr	fract.	mrem/yr	fract.
Cs-137	0.000E+00	0.0000	0.000E+00	0.0000	0.000E+00	0.0000	0.000E+00	0.0000	0.000E+00	0.0000	0.000E+00	0.0000	7.931E-02	0.0334
Pb-210	0.000E+00	0.0000	0.000E+00	0.0000	0.000E+00	0.0000	0.000E+00	0.0000	0.000E+00	0.0000	0.000E+00	0.0000	3.093E-01	0.1301
Ra-226	0.000E+00	0.0000	0.000E+00	0.0000	0.000E+00	0.0000	0.000E+00	0.0000	0.000E+00	0.0000	0.000E+00	0.0000	1.857E+00	0.7810
Sr-90	0.000E+00	0.0000	0.000E+00	0.0000	0.000E+00	0.0000	0.000E+00	0.0000	0.000E+00	0.0000	0.000E+00	0.0000	1.321E-01	0.0556
Total	0.000E+00	0.0000	0.000E+00	0.0000	0.000E+00	0.0000	0.000E+00	0.0000	0.000E+00	0.0000	0.000E+00	0.0000	2.378E+00	1.0000

*Sum of all water independent and dependent pathways.

Total Dose Contributions TDOSE(i,p,t) for Individual Radionuclides (i) and Pathways (p)
As mrem/yr and Fraction of Total Dose At t = 3.000E+01 years

Water Independent Pathways (Inhalation excludes radon)

Radio-	Ground		Inhalation		Radon		Plant		Meat		Milk		Soil	
Nuclide	mrem/yr	fract.	mrem/yr	fract.	mrem/yr	fract.	mrem/yr	fract.	mrem/yr	fract.	mrem/yr	fract.	mrem/yr	fract.
Cs-137	4.852E-02	0.0223	3.917E-08	0.0000	0.000E+00	0.0000	1.249E-03	0.0006	1.092E-04	0.0001	3.565E-05	0.0000	9.822E-06	0.0000
Pb-210	3.050E-04	0.0001	9.694E-05	0.0000	0.000E+00	0.0000	1.546E-01	0.0710	5.286E-04	0.0002	2.576E-04	0.0001	4.865E-03	0.0022
Ra-226	1.359E+00	0.6243	2.397E-04	0.0001	0.000E+00	0.0000	5.206E-01	0.2392	1.649E-03	0.0008	1.402E-03	0.0006	9.736E-03	0.0045
Sr-90	8.682E-04	0.0004	3.969E-06	0.0000	0.000E+00	0.0000	7.071E-02	0.0325	1.428E-03	0.0007	4.239E-04	0.0002	7.415E-05	0.0000
Total	1.409E+00	0.6472	3.406E-04	0.0002	0.000E+00	0.0000	7.472E-01	0.3433	3.715E-03	0.0017	2.119E-03	0.0010	1.468E-02	0.0067

Total Dose Contributions TDOSE(i,p,t) for Individual Radionuclides (i) and Pathways (p)
As mrem/yr and Fraction of Total Dose At t = 3.000E+01 years

Water Dependent Pathways

Radio-	Water		Fish		Radon		Plant		Meat		Milk		All Pathways*	
Nuclide	mrem/yr	fract.	mrem/yr	fract.	mrem/yr	fract.	mrem/yr	fract.	mrem/yr	fract.	mrem/yr	fract.	mrem/yr	fract.
Cs-137	0.000E+00	0.0000	0.000E+00	0.0000	0.000E+00	0.0000	0.000E+00	0.0000	0.000E+00	0.0000	0.000E+00	0.0000	4.993E-02	0.0229
Pb-210	0.000E+00	0.0000	0.000E+00	0.0000	0.000E+00	0.0000	0.000E+00	0.0000	0.000E+00	0.0000	0.000E+00	0.0000	1.607E-01	0.0738
Ra-226	0.000E+00	0.0000	0.000E+00	0.0000	0.000E+00	0.0000	0.000E+00	0.0000	0.000E+00	0.0000	0.000E+00	0.0000	1.893E+00	0.8695
Sr-90	0.000E+00	0.0000	0.000E+00	0.0000	0.000E+00	0.0000	0.000E+00	0.0000	0.000E+00	0.0000	0.000E+00	0.0000	7.351E-02	0.0338
Total	0.000E+00	0.0000	0.000E+00	0.0000	0.000E+00	0.0000	0.000E+00	0.0000	0.000E+00	0.0000	0.000E+00	0.0000	2.177E+00	1.0000

*Sum of all water independent and dependent pathways.

Total Dose Contributions TDOSE(i,p,t) for Individual Radionuclides (i) and Pathways (p)
As mrem/yr and Fraction of Total Dose At t = 1.000E+02 years

Water Independent Pathways (Inhalation excludes radon)

Radio-	Ground		Inhalation		Radon		Plant		Meat		Milk		Soil	
Nuclide	mrem/yr	fract.	mrem/yr	fract.	mrem/yr	fract.	mrem/yr	fract.	mrem/yr	fract.	mrem/yr	fract.	mrem/yr	fract.
Cs-137	9.604E-03	0.0056	7.753E-09	0.0000	0.000E+00	0.0000	2.471E-04	0.0001	2.161E-05	0.0000	7.057E-06	0.0000	1.944E-06	0.0000
Pb-210	3.082E-05	0.0000	9.795E-06	0.0000	0.000E+00	0.0000	1.562E-02	0.0091	5.341E-05	0.0000	2.603E-05	0.0000	4.915E-04	0.0003
Ra-226	1.117E+00	0.6528	2.694E-04	0.0002	0.000E+00	0.0000	5.434E-01	0.3176	1.750E-03	0.0010	1.345E-03	0.0008	1.164E-02	0.0068
Sr-90	1.115E-04	0.0001	5.098E-07	0.0000	0.000E+00	0.0000	9.082E-03	0.0053	1.834E-04	0.0001	5.445E-05	0.0000	9.523E-06	0.0000
Total	1.127E+00	0.6585	2.797E-04	0.0002	0.000E+00	0.0000	5.683E-01	0.3322	2.009E-03	0.0012	1.432E-03	0.0008	1.214E-02	0.0071

Total Dose Contributions TDOSE(i,p,t) for Individual Radionuclides (i) and Pathways (p)
As mrem/yr and Fraction of Total Dose At t = 1.000E+02 years

Water Dependent Pathways

Radio-	Water		Fish		Radon		Plant		Meat		Milk		All Pathways*	
Nuclide	mrem/yr	fract.	mrem/yr	fract.	mrem/yr	fract.	mrem/yr	fract.	mrem/yr	fract.	mrem/yr	fract.	mrem/yr	fract.
Cs-137	0.000E+00	0.0000	0.000E+00	0.0000	0.000E+00	0.0000	0.000E+00	0.0000	0.000E+00	0.0000	0.000E+00	0.0000	9.882E-03	0.0058
Pb-210	0.000E+00	0.0000	0.000E+00	0.0000	0.000E+00	0.0000	0.000E+00	0.0000	0.000E+00	0.0000	0.000E+00	0.0000	1.624E-02	0.0095
Ra-226	0.000E+00	0.0000	0.000E+00	0.0000	0.000E+00	0.0000	0.000E+00	0.0000	0.000E+00	0.0000	0.000E+00	0.0000	1.675E+00	0.9792
Sr-90	0.000E+00	0.0000	0.000E+00	0.0000	0.000E+00	0.0000	0.000E+00	0.0000	0.000E+00	0.0000	0.000E+00	0.0000	9.441E-03	0.0055
Total	0.000E+00	0.0000	0.000E+00	0.0000	0.000E+00	0.0000	0.000E+00	0.0000	0.000E+00	0.0000	0.000E+00	0.0000	1.711E+00	1.0000

*Sum of all water independent and dependent pathways.

Total Dose Contributions TDOSE(i,p,t) for Individual Radionuclides (i) and Pathways (p)
As mrem/yr and Fraction of Total Dose At t = 3.000E+02 years

Water Independent Pathways (Inhalation excludes radon)

Radio-	Ground		Inhalation		Radon		Plant		Meat		Milk		Soil	
Nuclide	mrem/yr	fract.	mrem/yr	fract.	mrem/yr	fract.	mrem/yr	fract.	mrem/yr	fract.	mrem/yr	fract.	mrem/yr	fract.
Cs-137	9.385E-05	0.0001	7.577E-11	0.0000	0.000E+00	0.0000	2.415E-06	0.0000	2.112E-07	0.0000	6.896E-08	0.0000	1.900E-08	0.0000
Pb-210	4.411E-08	0.0000	1.402E-08	0.0000	0.000E+00	0.0000	2.236E-05	0.0000	7.645E-08	0.0000	3.725E-08	0.0000	7.035E-07	0.0000
Ra-226	6.371E-01	0.6600	1.595E-04	0.0002	0.000E+00	0.0000	3.192E-01	0.3307	1.030E-03	0.0011	7.824E-04	0.0008	6.929E-03	0.0072
Sr-90	3.167E-07	0.0000	1.448E-09	0.0000	0.000E+00	0.0000	2.579E-05	0.0000	5.209E-07	0.0000	1.546E-07	0.0000	2.705E-08	0.0000
Total	6.371E-01	0.6600	1.595E-04	0.0002	0.000E+00	0.0000	3.192E-01	0.3307	1.031E-03	0.0011	7.826E-04	0.0008	6.930E-03	0.0072

Total Dose Contributions TDOSE(i,p,t) for Individual Radionuclides (i) and Pathways (p)
As mrem/yr and Fraction of Total Dose At t = 3.000E+02 years

Water Dependent Pathways

Radio-	Water		Fish		Radon		Plant		Meat		Milk		All Pathways*	
Nuclide	mrem/yr	fract.	mrem/yr	fract.	mrem/yr	fract.	mrem/yr	fract.	mrem/yr	fract.	mrem/yr	fract.	mrem/yr	fract.
Cs-137	0.000E+00	0.0000	0.000E+00	0.0000	0.000E+00	0.0000	0.000E+00	0.0000	0.000E+00	0.0000	0.000E+00	0.0000	9.656E-05	0.0001
Pb-210	0.000E+00	0.0000	0.000E+00	0.0000	0.000E+00	0.0000	0.000E+00	0.0000	0.000E+00	0.0000	0.000E+00	0.0000	2.324E-05	0.0000
Ra-226	0.000E+00	0.0000	0.000E+00	0.0000	0.000E+00	0.0000	0.000E+00	0.0000	0.000E+00	0.0000	0.000E+00	0.0000	9.651E-01	0.9998
Sr-90	1.205E-05	0.0000	6.112E-09	0.0000	0.000E+00	0.0000	2.546E-07	0.0000	2.645E-08	0.0000	1.444E-08	0.0000	3.916E-05	0.0000
Total	1.205E-05	0.0000	6.112E-09	0.0000	0.000E+00	0.0000	2.546E-07	0.0000	2.645E-08	0.0000	1.444E-08	0.0000	9.653E-01	1.0000

*Sum of all water independent and dependent pathways.

Total Dose Contributions TDOSE(i,p,t) for Individual Radionuclides (i) and Pathways (p)
As mrem/yr and Fraction of Total Dose At t = 1.000E+03 years

Water Independent Pathways (Inhalation excludes radon)

Radio-	Ground		Inhalation		Radon		Plant		Meat		Milk		Soil	
Nuclide	mrem/yr	fract.	mrem/yr	fract.	mrem/yr	fract.	mrem/yr	fract.	mrem/yr	fract.	mrem/yr	fract.	mrem/yr	fract.
Cs-137	8.657E-12	0.0000	6.989E-18	0.0000	0.000E+00	0.0000	2.228E-13	0.0000	1.948E-14	0.0000	6.361E-15	0.0000	1.752E-15	0.0000
Pb-210	4.893E-18	0.0000	1.555E-18	0.0000	0.000E+00	0.0000	2.480E-15	0.0000	8.480E-18	0.0000	4.132E-18	0.0000	7.804E-17	0.0000
Ra-226	8.930E-02	0.1667	2.236E-05	0.0000	0.000E+00	0.0000	4.475E-02	0.0835	1.444E-04	0.0003	1.097E-04	0.0002	9.714E-04	0.0018
Sr-90	3.867E-16	0.0000	1.768E-18	0.0000	0.000E+00	0.0000	3.150E-14	0.0000	6.361E-16	0.0000	1.888E-16	0.0000	3.303E-17	0.0000
Total	8.930E-02	0.1667	2.236E-05	0.0000	0.000E+00	0.0000	4.475E-02	0.0835	1.444E-04	0.0003	1.097E-04	0.0002	9.714E-04	0.0018

Total Dose Contributions TDOSE(i,p,t) for Individual Radionuclides (i) and Pathways (p)
As mrem/yr and Fraction of Total Dose At t = 1.000E+03 years

Water Dependent Pathways

Radio-	Water		Fish		Radon		Plant		Meat		Milk		All Pathways*	
Nuclide	mrem/yr	fract.	mrem/yr	fract.	mrem/yr	fract.	mrem/yr	fract.	mrem/yr	fract.	mrem/yr	fract.	mrem/yr	fract.
Cs-137	0.000E+00	0.0000	0.000E+00	0.0000	0.000E+00	0.0000	0.000E+00	0.0000	0.000E+00	0.0000	0.000E+00	0.0000	8.908E-12	0.0000
Pb-210	7.822E-15	0.0000	1.639E-17	0.0000	0.000E+00	0.0000	1.537E-16	0.0000	1.708E-18	0.0000	1.402E-18	0.0000	1.057E-14	0.0000
Ra-226	3.919E-01	0.7314	7.012E-04	0.0013	0.000E+00	0.0000	7.717E-03	0.0144	9.018E-05	0.0002	1.040E-04	0.0002	5.358E-01	1.0000
Sr-90	1.963E-13	0.0000	9.961E-17	0.0000	0.000E+00	0.0000	4.150E-15	0.0000	4.319E-16	0.0000	2.355E-16	0.0000	2.340E-13	0.0000
Total	3.919E-01	0.7314	7.012E-04	0.0013	0.000E+00	0.0000	7.717E-03	0.0144	9.018E-05	0.0002	1.040E-04	0.0002	5.358E-01	1.0000

*Sum of all water independent and dependent pathways.

Dose/Source Ratios Summed Over All Pathways
Parent and Progeny Principal Radionuclide Contributions Indicated

Parent (i)	Product (j)	Thread Fraction	DSR(j,t) At Time in Years (mrem/yr)/(pCi/g) 0.000E+00	1.000E+00	3.000E+00	1.000E+01	3.000E+01	1.000E+02	3.000E+02	1.000E+03
Cs-137+D	Cs-137+D	1.000E+00	1.754E+00	1.714E+00	1.636E+00	1.391E+00	8.759E-01	1.734E-01	1.694E-03	1.563E-10
Pb-210+D	Pb-210+D	1.000E+00	1.651E+00	1.597E+00	1.496E+00	1.190E+00	6.180E-01	6.244E-02	8.937E-05	4.067E-14
Ra-226+D	Ra-226+D	1.000E+00	6.872E+00	6.853E+00	6.814E+00	6.682E+00	6.317E+00	5.190E+00	2.961E+00	7.310E-01
Ra-226+D	Pb-210+D	1.000E+00	3.038E-02	8.149E-02	1.769E-01	4.614E-01	9.623E-01	1.253E+00	7.516E-01	1.330E+00
Ra-226+D	∑DSR(j)		6.902E+00	6.934E+00	6.991E+00	7.143E+00	7.279E+00	6.443E+00	3.712E+00	2.061E+00
Sr-90+D	Sr-90+D	1.000E+00	1.042E+00	1.012E+00	9.543E-01	7.773E-01	4.324E-01	5.554E-02	2.304E-04	1.376E-12

The DSR includes contributions from associated (half-life ≤ 180 days) daughters.

Single Radionuclide Soil Guidelines G(i,t) in pCi/g
Basic Radiation Dose Limit = 2.500E+01 mrem/yr

Nuclide (i)	t= 0.000E+00	1.000E+00	3.000E+00	1.000E+01	3.000E+01	1.000E+02	3.000E+02	1.000E+03
Cs-137	1.426E+01	1.459E+01	1.528E+01	1.797E+01	2.854E+01	1.442E+02	1.476E+04	1.600E+11
Pb-210	1.515E+01	1.565E+01	1.671E+01	2.102E+01	4.045E+01	4.004E+02	2.797E+05	*7.634E+13
Ra-226	3.622E+00	3.605E+00	3.576E+00	3.500E+00	3.434E+00	3.880E+00	6.735E+00	1.213E+01
Sr-90	2.399E+01	2.470E+01	2.620E+01	3.216E+01	5.782E+01	4.502E+02	1.085E+05	1.816E+13

*At specific activity limit

Summed Dose/Source Ratios DSR(i,t) in (mrem/yr)/(pCi/g)
and Single Radionuclide Soil Guidelines G(i,t) in pCi/g
at tmin = time of minimum single radionuclide soil guideline
and at tmax = time of maximum total dose = 0.000E+00 years

Nuclide (i)	Initial (pCi/g)	tmin (years)	DSR(i,tmin)	G(i,tmin) (pCi/g)	DSR(i,tmax)	G(i,tmax) (pCi/g)
Cs-137	5.700E-02	0.000E+00	1.754E+00	1.426E+01	1.754E+00	1.426E+01
Pb-210	2.600E-01	0.000E+00	1.651E+00	1.515E+01	1.651E+00	1.515E+01
Ra-226	2.600E-01	28.11 ± 0.06	7.280E+00	3.434E+00	6.902E+00	3.622E+00
Sr-90	1.700E-01	0.000E+00	1.042E+00	2.399E+01	1.042E+00	2.399E+01

Individual Nuclide Dose Summed Over All Pathways
Parent Nuclide and Branch Fraction Indicated

Nuclide (j)	Parent (i)	THF(i)	DOSE(j,t), mrem/yr t= 0.000E+00	1.000E+00	3.000E+00	1.000E+01	3.000E+01	1.000E+02	3.000E+02	1.000E+03
Cs-137	Cs-137	1.000E+00	9.996E-02	9.768E-02	9.326E-02	7.931E-02	4.993E-02	9.882E-03	9.656E-05	8.908E-12
Pb-210	Pb-210	1.000E+00	4.291E-01	4.153E-01	3.890E-01	3.093E-01	1.607E-01	1.624E-02	2.324E-05	1.057E-14
Pb-210	Ra-226	1.000E+00	7.900E-03	2.119E-02	4.599E-02	1.200E-01	2.502E-01	3.258E-01	1.954E-01	3.457E-01
Pb-210	∑DOSE(j)		4.370E-01	4.365E-01	4.350E-01	4.293E-01	4.109E-01	3.420E-01	1.954E-01	3.457E-01
Ra-226	Ra-226	1.000E+00	1.787E+00	1.782E+00	1.772E+00	1.737E+00	1.642E+00	1.349E+00	7.697E-01	1.901E-01
Sr-90	Sr-90	1.000E+00	1.771E-01	1.720E-01	1.622E-01	1.321E-01	7.351E-02	9.441E-03	3.916E-05	2.340E-13

THF(i) is the thread fraction of the parent nuclide.

Individual Nuclide Soil Concentration
Parent Nuclide and Branch Fraction Indicated

Nuclide (j)	Parent (i)	THF(i)	S(j,t), pCi/g t= 0.000E+00	1.000E+00	3.000E+00	1.000E+01	3.000E+01	1.000E+02	3.000E+02	1.000E+03
Cs-137	Cs-137	1.000E+00	5.700E-02	5.570E-02	5.318E-02	4.522E-02	2.847E-02	5.635E-03	5.506E-05	5.079E-12
Pb-210	Pb-210	1.000E+00	2.600E-01	2.516E-01	2.357E-01	1.874E-01	9.735E-02	9.836E-03	1.408E-05	1.562E-15
Pb-210	Ra-226	1.000E+00	0.000E+00	7.939E-03	2.299E-02	6.791E-02	1.471E-01	1.937E-01	1.163E-01	1.630E-02
Pb-210	∑S(j):		2.600E-01	2.596E-01	2.587E-01	2.553E-01	2.444E-01	2.035E-01	1.163E-01	1.630E-02
Ra-226	Ra-226	1.000E+00	2.600E-01	2.593E-01	2.578E-01	2.528E-01	2.390E-01	1.964E-01	1.120E-01	1.570E-02
Sr-90	Sr-90	1.000E+00	1.700E-01	1.651E-01	1.557E-01	1.268E-01	7.054E-02	9.060E-03	2.573E-05	3.142E-14

THF(i) is the thread fraction of the parent nuclide.

RESCALC.EXE execution time = 0.62 seconds

Table of Contents

Part III: Intake Quantities and Health Risk Factors

Cancer Risk Slope Factors 2
Risk Slope and ETFG for the Ground Pathway 3
Amount of Intake Quantities and Excess Cancer Risks
Time= 0.000E+00 4
Time= 1.000E+00 7
Time= 3.000E+00 10
Time= 1.000E+01 13
Time= 3.000E+01 16
Time= 1.000E+02 19
Time= 3.000E+02 22
Time= 1.000E+03 25

Cancer Risk Slope Factors Summary Table
Risk Library: FGR 13 Morbidity

Menu	Parameter	Current Value	Base Case*	Parameter Name
Sf-1	Ground external radiation slope factors, 1/yr per (pCi/g):			
Sf-1	Cs-137+D	2.55E-06	5.32E-10	SLPF(1,1)
Sf-1	Pb-210+D	4.21E-09	1.41E-09	SLPF(2,1)
Sf-1	Ra-226+D	8.49E-06	2.29E-08	SLPF(3,1)
Sf-1	Sr-90+D	1.96E-08	4.82E-10	SLPF(4,1)
Sf-2	Inhalation, slope factors, 1/(pCi):			
Sf-2	Cs-137+D	1.12E-10	1.12E-10	SLPF(1,2)
Sf-2	Pb-210+D	3.08E-08	1.58E-08	SLPF(2,2)
Sf-2	Ra-226+D	2.83E-08	2.82E-08	SLPF(3,2)
Sf-2	Sr-90+D	4.33E-10	4.25E-10	SLPF(4,2)
Sf-3	Food ingestion, slope factors, 1/(pCi):			
Sf-3	Cs-137+D	3.74E-11	3.74E-11	SLPF(1,3)
Sf-3	Pb-210+D	3.44E-09	1.18E-09	SLPF(2,3)
Sf-3	Ra-226+D	5.15E-10	5.14E-10	SLPF(3,3)
Sf-3	Sr-90+D	9.53E-11	6.88E-11	SLPF(4,3)
Sf-3	Water ingestion, slope factors, 1/(pCi):			
Sf-3	Cs-137+D	3.04E-11	3.04E-11	SLPF(1,4)
Sf-3	Pb-210+D	2.66E-09	8.81E-10	SLPF(2,4)
Sf-3	Ra-226+D	3.86E-10	3.85E-10	SLPF(3,4)
Sf-3	Sr-90+D	7.40E-11	5.59E-11	SLPF(4,4)
Sf-3	Soil ingestion, slope factors, 1/(pCi):			
Sf-3	Cs-137+D	3.74E-11	3.74E-11	SLPF(1,5)
Sf-3	Pb-210+D	3.44E-09	1.18E-09	SLPF(2,5)
Sf-3	Ra-226+D	5.15E-10	5.14E-10	SLPF(3,5)
Sf-3	Sr-90+D	9.53E-11	6.88E-11	SLPF(4,5)
Sf-Rn	Radon Inhalation slope factors, 1/(pCi):			
Sf-Rn	Rn-222	1.80E-12	1.80E-12	SLPFRN(1,1)
Sf-Rn	Po-218	3.70E-12	3.70E-12	SLPFRN(1,2)
Sf-Rn	Pb-214	6.20E-12	6.20E-12	SLPFRN(1,3)
Sf-Rn	Bi-214	1.50E-11	1.50E-11	SLPFRN(1,4)
Sf-Rn	Radon K factors, (mrem/WLM):			
Sf-Rn	Rn-222 Indoor	7.60E+02	7.60E+02	KFACTR(1,1)
Sf-Rn	Rn-222 Outdoor	5.70E+02	5.70E+02	KFACTR(1,2)

*Base Case means Default.Lib w/o Associate Nuclide contributions.

Risk Slope and Environmental Transport Factors for the Ground Pathway

Nuclide (i)	Slope(i)*	ETFG(i,t) At Time in Years (dimensionless) t= 0.000E+00	1.000E+00	3.000E+00	1.000E+01	3.000E+01	1.000E+02	3.000E+02	1.000E+03
At-218	3.570E-09	5.286E-01	5.286E-01	5.286E-01	5.286E-01	5.286E-01	5.286E-01	5.286E-01	5.286E-01
Ba-137m	2.690E-06	5.053E-01	5.053E-01	5.053E-01	5.053E-01	5.053E-01	5.053E-01	5.053E-01	5.053E-01
Bi-210	2.760E-09	5.166E-01	5.166E-01	5.166E-01	5.166E-01	5.166E-01	5.166E-01	5.166E-01	5.166E-01
Bi-214	7.480E-06	5.079E-01	5.079E-01	5.079E-01	5.079E-01	5.079E-01	5.079E-01	5.079E-01	5.079E-01
Cs-137	5.320E-10	5.246E-01	5.246E-01	5.246E-01	5.246E-01	5.246E-01	5.246E-01	5.246E-01	5.246E-01
Pb-210	1.410E-09	5.295E-01	5.295E-01	5.295E-01	5.295E-01	5.295E-01	5.295E-01	5.295E-01	5.295E-01
Pb-214	9.820E-07	5.164E-01	5.164E-01	5.164E-01	5.164E-01	5.164E-01	5.164E-01	5.164E-01	5.164E-01
Po-210	3.950E-11	5.068E-01	5.068E-01	5.068E-01	5.068E-01	5.068E-01	5.068E-01	5.068E-01	5.068E-01
Po-214	3.860E-10	5.054E-01	5.054E-01	5.054E-01	5.054E-01	5.054E-01	5.054E-01	5.054E-01	5.054E-01
Po-218	4.260E-11	5.068E-01	5.068E-01	5.068E-01	5.068E-01	5.068E-01	5.068E-01	5.068E-01	5.068E-01
Ra-226	2.290E-08	5.273E-01	5.273E-01	5.273E-01	5.273E-01	5.273E-01	5.273E-01	5.273E-01	5.273E-01
Rn-222	1.740E-09	5.061E-01	5.061E-01	5.061E-01	5.061E-01	5.061E-01	5.061E-01	5.061E-01	5.061E-01
Sr-90	4.820E-10	5.271E-01	5.271E-01	5.271E-01	5.271E-01	5.271E-01	5.271E-01	5.271E-01	5.271E-01
Tl-210	0.000E+00	6.000E-01	6.000E-01	6.000E-01	6.000E-01	6.000E-01	6.000E-01	6.000E-01	6.000E-01
Y-90	1.910E-08	5.068E-01	5.068E-01	5.068E-01	5.068E-01	5.068E-01	5.068E-01	5.068E-01	5.068E-01

* - Units are 1/yr per (pCi/g) at infinite depth and area. Multiplication by ETFG(i,t) converts to site conditions.

Amount of Intake Quantities QINT(i,p,t) for Individual Radionuclides (i) and Pathways (p)
As pCi/yr at t= 0.000E+00 years

Radio-	Water Independent Pathways (Inhalation w/o radon)					Water Dependent Pathways					Total
Nuclide	Inhalation	Plant	Meat	Milk	Soil	Water	Fish	Plant	Meat	Milk	Ingestion*
Cs-137	2.487E-03	5.058E+01	4.423E+00	1.444E+00	3.979E-01	0.000E+00	0.000E+00	0.000E+00	0.000E+00	0.000E+00	5.685E+01
Pb-210	1.135E-02	5.769E+01	1.972E-01	9.609E-02	1.815E+00	0.000E+00	0.000E+00	0.000E+00	0.000E+00	0.000E+00	5.979E+01
Ra-226	1.135E-02	2.307E+02	6.725E-01	8.235E-01	1.815E+00	0.000E+00	0.000E+00	0.000E+00	0.000E+00	0.000E+00	2.340E+02
Sr-90	7.418E-03	1.131E+03	2.283E+01	6.780E+00	1.187E+00	0.000E+00	0.000E+00	0.000E+00	0.000E+00	0.000E+00	1.162E+03

* Sum of all ingestion pathways, i.e. water independent plant, meat, milk, soil
and water-dependent water, fish, plant, meat, milk pathways

Amount of Intake Quantities QINT9(irn,i,t) and QINT9W(irn,i,t) for Inhalation of
Radon and its Decay Products as pCi/yr at t= 0.000E+00 years

Radon	Radionuclides							
Pathway	Rn-222	Po-218	Pb-214	Bi-214	Rn-220	Po-216	Pb-212	Bi-212
Water-ind.	0.000E+00	0.000E+00	0.000E+00	0.000E+00	0.000E+00	0.000E+00	0.000E+00	0.000E+00
Water-dep.	0.000E+00	0.000E+00	0.000E+00	0.000E+00	0.000E+00	0.000E+00	0.000E+00	0.000E+00
Total	0.000E+00	0.000E+00	0.000E+00	0.000E+00	0.000E+00	0.000E+00	0.000E+00	0.000E+00

Water-ind. == Water-independent Water-dep. == Water-dependent

Excess Cancer Risks CNRS(i,p,t) for Individual Radionuclides (i) and Pathways (p)
and Fraction of Total Risk at t= 0.000E+00 years

Water Independent Pathways (Inhalation excludes radon)

Radio-	Ground		Inhalation		Plant		Meat		Milk		Soil	
Nuclide	risk	fract.	risk	fract.	risk	fract.	risk	fract.	risk	fract.	risk	fract.
Cs-137	1.586E-06	0.0347	6.026E-12	0.0000	4.092E-08	0.0009	3.578E-09	0.0001	1.168E-09	0.0000	3.219E-10	0.0000
Pb-210	1.661E-08	0.0004	1.017E-08	0.0002	5.805E-06	0.1270	1.998E-08	0.0004	9.699E-09	0.0002	1.821E-07	0.0040
Ra-226	3.231E-05	0.7069	9.228E-09	0.0002	3.417E-06	0.0748	9.964E-09	0.0002	1.220E-08	0.0003	2.688E-08	0.0006
Sr-90	3.370E-08	0.0007	6.415E-11	0.0000	2.152E-06	0.0471	4.345E-08	0.0010	1.290E-08	0.0003	2.257E-09	0.0000
Total	3.395E-05	0.7427	1.947E-08	0.0004	1.142E-05	0.2498	7.698E-08	0.0017	3.597E-08	0.0008	2.116E-07	0.0046

Excess Cancer Risks CNRS(i,p,t) for Individual Radionuclides (i) and Pathways (p)
and Fraction of Total Risk at t= 0.000E+00 years

Water Dependent Pathways

Radio-	Water		Fish		Plant		Meat		Milk		All Pathways**	
Nuclide	risk	fract.	risk	fract.	risk	fract.	risk	fract.	risk	fract.	risk	fract.
Cs-137	0.000E+00	0.0000	0.000E+00	0.0000	0.000E+00	0.0000	0.000E+00	0.0000	0.000E+00	0.0000	1.632E-06	0.0357
Pb-210	0.000E+00	0.0000	0.000E+00	0.0000	0.000E+00	0.0000	0.000E+00	0.0000	0.000E+00	0.0000	6.044E-06	0.1322
Ra-226	0.000E+00	0.0000	0.000E+00	0.0000	0.000E+00	0.0000	0.000E+00	0.0000	0.000E+00	0.0000	3.579E-05	0.7830
Sr-90	0.000E+00	0.0000	0.000E+00	0.0000	0.000E+00	0.0000	0.000E+00	0.0000	0.000E+00	0.0000	2.244E-06	0.0491
Total	0.000E+00	0.0000	0.000E+00	0.0000	0.000E+00	0.0000	0.000E+00	0.0000	0.000E+00	0.0000	4.571E-05	1.0000

** Sum of water independent ground, inhalation, plant, meat, milk, soil
and water dependent water, fish, plant, meat, milk pathways

Excess Cancer Risks CNRS9(irn,i,t) and CNRS9W(irn,i,t) for Inhalation of
Radon and its Decay Products at t= 0.000E+00 years

Radon	Radionuclides							
Pathway	Rn-222	Po-218	Pb-214	Bi-214	Rn-220	Po-216	Pb-212	Bi-212
Water-ind.	0.000E+00	0.000E+00	0.000E+00	0.000E+00	0.000E+00	0.000E+00	0.000E+00	0.000E+00
Water-dep.	0.000E+00	0.000E+00	0.000E+00	0.000E+00	0.000E+00	0.000E+00	0.000E+00	0.000E+00
Total	0.000E+00	0.000E+00	0.000E+00	0.000E+00	0.000E+00	0.000E+00	0.000E+00	0.000E+00

Water-ind. == Water-independent Water-dep. == Water-dependent

Total Excess Cancer Risk CNRS(i,p,t)*** for Initially Existent Radionuclides (i) and Pathways (p)
and Fraction of Total Risk at t= 0.000E+00 years

Water Independent Pathways (Inhalation excludes radon)

Radio-	Ground		Inhalation		Radon		Plant		Meat		Milk		Soil	
Nuclide	risk	fract.	risk	fract.	risk	fract.	risk	fract.	risk	fract.	risk	fract.	risk	fract.
Cs-137	1.586E-06	0.0347	6.026E-12	0.0000	0.000E+00	0.0000	4.092E-08	0.0009	3.578E-09	0.0001	1.168E-09	0.0000	3.219E-10	0.0000
Pb-210	1.089E-08	0.0002	6.666E-09	0.0001	0.000E+00	0.0000	3.795E-06	0.0830	1.297E-08	0.0003	6.321E-09	0.0001	1.194E-07	0.0026
Ra-226	3.232E-05	0.7070	1.273E-08	0.0003	0.000E+00	0.0000	5.428E-06	0.1188	1.697E-08	0.0004	1.558E-08	0.0003	8.960E-08	0.0020
Sr-90	3.370E-08	0.0007	6.415E-11	0.0000	0.000E+00	0.0000	2.152E-06	0.0471	4.345E-08	0.0010	1.290E-08	0.0003	2.257E-09	0.0000
Total	3.395E-05	0.7427	1.947E-08	0.0004	0.000E+00	0.0000	1.142E-05	0.2498	7.698E-08	0.0017	3.597E-08	0.0008	2.116E-07	0.0046

Total Excess Cancer Risk CNRS(i,p,t)*** for Initially Existent Radionuclides (i) and Pathways (p)
and Fraction of Total Risk at t= 0.000E+00 years

Water Dependent Pathways

Radio-	Water		Fish		Radon		Plant		Meat		Milk		All pathways	
Nuclide	risk	fract.	risk	fract.	risk	fract.	risk	fract.	risk	fract.	risk	fract.	risk	fract.
Cs-137	0.000E+00	0.0000	0.000E+00	0.0000	0.000E+00	0.0000	0.000E+00	0.0000	0.000E+00	0.0000	0.000E+00	0.0000	1.632E-06	0.0357
Pb-210	0.000E+00	0.0000	0.000E+00	0.0000	0.000E+00	0.0000	0.000E+00	0.0000	0.000E+00	0.0000	0.000E+00	0.0000	3.951E-06	0.0864
Ra-226	0.000E+00	0.0000	0.000E+00	0.0000	0.000E+00	0.0000	0.000E+00	0.0000	0.000E+00	0.0000	0.000E+00	0.0000	3.788E-05	0.8288
Sr-90	0.000E+00	0.0000	0.000E+00	0.0000	0.000E+00	0.0000	0.000E+00	0.0000	0.000E+00	0.0000	0.000E+00	0.0000	2.244E-06	0.0491
Total	0.000E+00	0.0000	0.000E+00	0.0000	0.000E+00	0.0000	0.000E+00	0.0000	0.000E+00	0.0000	0.000E+00	0.0000	4.571E-05	1.0000

***CNRSI(i,p,t) includes contribution from decay daughter radionuclides

Amount of Intake Quantities QINT(i,p,t) for Individual Radionuclides (i) and Pathways (p)
As pCi/yr at t= 1.000E+00 years

Radio-	Water Independent Pathways (Inhalation w/o radon)					Water Dependent Pathways					Total
Nuclide	Inhalation	Plant	Meat	Milk	Soil	Water	Fish	Plant	Meat	Milk	Ingestion*
Cs-137	2.430E-03	4.943E+01	4.322E+00	1.411E+00	3.888E-01	0.000E+00	0.000E+00	0.000E+00	0.000E+00	0.000E+00	5.555E+01
Pb-210	1.133E-02	5.778E+01	1.990E-01	9.657E-02	1.812E+00	0.000E+00	0.000E+00	0.000E+00	0.000E+00	0.000E+00	5.989E+01
Ra-226	1.131E-02	2.301E+02	6.709E-01	8.214E-01	1.810E+00	0.000E+00	0.000E+00	0.000E+00	0.000E+00	0.000E+00	2.334E+02
Sr-90	7.204E-03	1.099E+03	2.219E+01	6.589E+00	1.152E+00	0.000E+00	0.000E+00	0.000E+00	0.000E+00	0.000E+00	1.129E+03

* Sum of all ingestion pathways, i.e. water independent plant, meat, milk, soil
and water-dependent water, fish, plant, meat, milk pathways

Amount of Intake Quantities QINT9(irn,i,t) and QINT9W(irn,i,t) for Inhalation of
Radon and its Decay Products as pCi/yr at t= 1.000E+00 years

Radon	Radionuclides							
Pathway	Rn-222	Po-218	Pb-214	Bi-214	Rn-220	Po-216	Pb-212	Bi-212
Water-ind.	0.000E+00	0.000E+00	0.000E+00	0.000E+00	0.000E+00	0.000E+00	0.000E+00	0.000E+00
Water-dep.	0.000E+00	0.000E+00	0.000E+00	0.000E+00	0.000E+00	0.000E+00	0.000E+00	0.000E+00
Total	0.000E+00	0.000E+00	0.000E+00	0.000E+00	0.000E+00	0.000E+00	0.000E+00	0.000E+00

Water-ind. == Water-independent Water-dep. == Water-dependent

Excess Cancer Risks CNRS(i,p,t) for Individual Radionuclides (i) and Pathways (p)
and Fraction of Total Risk at t= 1.000E+00 years

Water Independent Pathways (Inhalation excludes radon)

Radio-	Ground		Inhalation		Plant		Meat		Milk		Soil	
Nuclide	risk	fract.	risk	fract.	risk	fract.	risk	fract.	risk	fract.	risk	fract.
Cs-137	1.550E-06	0.0341	5.888E-12	0.0000	3.998E-08	0.0009	3.496E-09	0.0001	1.142E-09	0.0000	3.145E-10	0.0000
Pb-210	1.658E-08	0.0004	1.015E-08	0.0002	5.795E-06	0.1274	1.996E-08	0.0004	9.685E-09	0.0002	1.817E-07	0.0040
Ra-226	3.222E-05	0.7082	9.203E-09	0.0002	3.408E-06	0.0749	9.936E-09	0.0002	1.216E-08	0.0003	2.680E-08	0.0006
Sr-90	3.272E-08	0.0007	6.230E-11	0.0000	2.090E-06	0.0459	4.220E-08	0.0009	1.253E-08	0.0003	2.192E-09	0.0000
Total	3.382E-05	0.7434	1.942E-08	0.0004	1.133E-05	0.2491	7.559E-08	0.0017	3.552E-08	0.0008	2.110E-07	0.0046

Excess Cancer Risks CNRS(i,p,t) for Individual Radionuclides (i) and Pathways (p)
and Fraction of Total Risk at t= 1.000E+00 years

Water Dependent Pathways

Radio-	Water		Fish		Plant		Meat		Milk		All Pathways**	
Nuclide	risk	fract.	risk	fract.	risk	fract.	risk	fract.	risk	fract.	risk	fract.
Cs-137	0.000E+00	0.0000	0.000E+00	0.0000	0.000E+00	0.0000	0.000E+00	0.0000	0.000E+00	0.0000	1.594E-06	0.0350
Pb-210	0.000E+00	0.0000	0.000E+00	0.0000	0.000E+00	0.0000	0.000E+00	0.0000	0.000E+00	0.0000	6.033E-06	0.1326
Ra-226	0.000E+00	0.0000	0.000E+00	0.0000	0.000E+00	0.0000	0.000E+00	0.0000	0.000E+00	0.0000	3.569E-05	0.7844
Sr-90	0.000E+00	0.0000	0.000E+00	0.0000	0.000E+00	0.0000	0.000E+00	0.0000	0.000E+00	0.0000	2.180E-06	0.0479
Total	0.000E+00	0.0000	0.000E+00	0.0000	0.000E+00	0.0000	0.000E+00	0.0000	0.000E+00	0.0000	4.549E-05	1.0000

** Sum of water independent ground, inhalation, plant, meat, milk, soil
and water dependent water, fish, plant, meat, milk pathways

Excess Cancer Risks CNRS9(irn,i,t) and CNRS9W(irn,i,t) for Inhalation of
Radon and its Decay Products at t= 1.000E+00 years

Radon	Radionuclides							
Pathway	Rn-222	Po-218	Pb-214	Bi-214	Rn-220	Po-216	Pb-212	Bi-212
Water-ind.	0.000E+00	0.000E+00	0.000E+00	0.000E+00	0.000E+00	0.000E+00	0.000E+00	0.000E+00
Water-dep.	0.000E+00	0.000E+00	0.000E+00	0.000E+00	0.000E+00	0.000E+00	0.000E+00	0.000E+00
Total	0.000E+00	0.000E+00	0.000E+00	0.000E+00	0.000E+00	0.000E+00	0.000E+00	0.000E+00

Water-ind. == Water-independent Water-dep. == Water-dependent

Total Excess Cancer Risk CNRS(i,p,t)*** for Initially Existent Radionuclides (i) and Pathways (p)
and Fraction of Total Risk at t= 1.000E+00 years

Water Independent Pathways (Inhalation excludes radon)

Radio-	Ground		Inhalation		Radon		Plant		Meat		Milk		Soil	
Nuclide	risk	fract.	risk	fract.	risk	fract.	risk	fract.	risk	fract.	risk	fract.	risk	fract.
Cs-137	1.550E-06	0.0341	5.888E-12	0.0000	0.000E+00	0.0000	3.998E-08	0.0009	3.496E-09	0.0001	1.142E-09	0.0000	3.145E-10	0.0000
Pb-210	1.054E-08	0.0002	6.451E-09	0.0001	0.000E+00	0.0000	3.672E-06	0.0807	1.256E-08	0.0003	6.117E-09	0.0001	1.155E-07	0.0025
Ra-226	3.223E-05	0.7084	1.290E-08	0.0003	0.000E+00	0.0000	5.530E-06	0.1216	1.734E-08	0.0004	1.573E-08	0.0003	9.299E-08	0.0020
Sr-90	3.272E-08	0.0007	6.230E-11	0.0000	0.000E+00	0.0000	2.090E-06	0.0459	4.220E-08	0.0009	1.253E-08	0.0003	2.192E-09	0.0000
Total	3.382E-05	0.7434	1.942E-08	0.0004	0.000E+00	0.0000	1.133E-05	0.2491	7.559E-08	0.0017	3.552E-08	0.0008	2.110E-07	0.0046

Total Excess Cancer Risk CNRS(i,p,t)*** for Initially Existent Radionuclides (i) and Pathways (p)
and Fraction of Total Risk at t= 1.000E+00 years

Water Dependent Pathways

Radio-	Water		Fish		Radon		Plant		Meat		Milk		All pathways	
Nuclide	risk	fract.	risk	fract.	risk	fract.	risk	fract.	risk	fract.	risk	fract.	risk	fract.
Cs-137	0.000E+00	0.0000	0.000E+00	0.0000	0.000E+00	0.0000	0.000E+00	0.0000	0.000E+00	0.0000	0.000E+00	0.0000	1.594E-06	0.0350
Pb-210	0.000E+00	0.0000	0.000E+00	0.0000	0.000E+00	0.0000	0.000E+00	0.0000	0.000E+00	0.0000	0.000E+00	0.0000	3.824E-06	0.0840
Ra-226	0.000E+00	0.0000	0.000E+00	0.0000	0.000E+00	0.0000	0.000E+00	0.0000	0.000E+00	0.0000	0.000E+00	0.0000	3.790E-05	0.8330
Sr-90	0.000E+00	0.0000	0.000E+00	0.0000	0.000E+00	0.0000	0.000E+00	0.0000	0.000E+00	0.0000	0.000E+00	0.0000	2.180E-06	0.0479
Total	0.000E+00	0.0000	0.000E+00	0.0000	0.000E+00	0.0000	0.000E+00	0.0000	0.000E+00	0.0000	0.000E+00	0.0000	4.549E-05	1.0000

***CNRSI(i,p,t) includes contribution from decay daughter radionuclides

Amount of Intake Quantities QINT(i,p,t) for Individual Radionuclides (i) and Pathways (p)
As pCi/yr at t= 3.000E+00 years

Radio-	Water Independent Pathways (Inhalation w/o radon)					Water Dependent Pathways					Total
Nuclide	Inhalation	Plant	Meat	Milk	Soil	Water	Fish	Plant	Meat	Milk	Ingestion*
Cs-137	2.320E-03	4.719E+01	4.127E+00	1.347E+00	3.712E-01	0.000E+00	0.000E+00	0.000E+00	0.000E+00	0.000E+00	5.304E+01
Pb-210	1.129E-02	5.758E+01	1.983E-01	9.624E-02	1.806E+00	0.000E+00	0.000E+00	0.000E+00	0.000E+00	0.000E+00	5.968E+01
Ra-226	1.125E-02	2.288E+02	6.671E-01	8.168E-01	1.800E+00	0.000E+00	0.000E+00	0.000E+00	0.000E+00	0.000E+00	2.321E+02
Sr-90	6.794E-03	1.036E+03	2.093E+01	6.213E+00	1.087E+00	0.000E+00	0.000E+00	0.000E+00	0.000E+00	0.000E+00	1.065E+03

* Sum of all ingestion pathways, i.e. water independent plant, meat, milk, soil
and water-dependent water, fish, plant, meat, milk pathways

Amount of Intake Quantities QINT9(irn,i,t) and QINT9W(irn,i,t) for Inhalation of
Radon and its Decay Products as pCi/yr at t= 3.000E+00 years

Radon	Radionuclides							
Pathway	Rn-222	Po-218	Pb-214	Bi-214	Rn-220	Po-216	Pb-212	Bi-212
Water-ind.	0.000E+00	0.000E+00	0.000E+00	0.000E+00	0.000E+00	0.000E+00	0.000E+00	0.000E+00
Water-dep.	0.000E+00	0.000E+00	0.000E+00	0.000E+00	0.000E+00	0.000E+00	0.000E+00	0.000E+00
Total	0.000E+00	0.000E+00	0.000E+00	0.000E+00	0.000E+00	0.000E+00	0.000E+00	0.000E+00

Water-ind. == Water-independent Water-dep. == Water-dependent

Excess Cancer Risks CNRS(i,p,t) for Individual Radionuclides (i) and Pathways (p)
and Fraction of Total Risk at t= 3.000E+00 years

Water Independent Pathways (Inhalation excludes radon)

Radio-	Ground		Inhalation		Plant		Meat		Milk		Soil	
Nuclide	risk	fract.	risk	fract.	risk	fract.	risk	fract.	risk	fract.	risk	fract.
Cs-137	1.479E-06	0.0328	5.621E-12	0.0000	3.818E-08	0.0008	3.338E-09	0.0001	1.090E-09	0.0000	3.003E-10	0.0000
Pb-210	1.651E-08	0.0004	1.010E-08	0.0002	5.771E-06	0.1280	1.987E-08	0.0004	9.644E-09	0.0002	1.810E-07	0.0040
Ra-226	3.204E-05	0.7109	9.151E-09	0.0002	3.389E-06	0.0752	9.880E-09	0.0002	1.210E-08	0.0003	2.665E-08	0.0006
Sr-90	3.086E-08	0.0007	5.875E-11	0.0000	1.971E-06	0.0437	3.980E-08	0.0009	1.182E-08	0.0003	2.067E-09	0.0000
Total	3.357E-05	0.7447	1.932E-08	0.0004	1.117E-05	0.2478	7.289E-08	0.0016	3.465E-08	0.0008	2.100E-07	0.0047

Excess Cancer Risks CNRS(i,p,t) for Individual Radionuclides (i) and Pathways (p)
and Fraction of Total Risk at t= 3.000E+00 years

Water Dependent Pathways

Radio-	Water		Fish		Plant		Meat		Milk		All Pathways**	
Nuclide	risk	fract.	risk	fract.	risk	fract.	risk	fract.	risk	fract.	risk	fract.
Cs-137	0.000E+00	0.0000	0.000E+00	0.0000	0.000E+00	0.0000	0.000E+00	0.0000	0.000E+00	0.0000	1.522E-06	0.0338
Pb-210	0.000E+00	0.0000	0.000E+00	0.0000	0.000E+00	0.0000	0.000E+00	0.0000	0.000E+00	0.0000	6.008E-06	0.1333
Ra-226	0.000E+00	0.0000	0.000E+00	0.0000	0.000E+00	0.0000	0.000E+00	0.0000	0.000E+00	0.0000	3.549E-05	0.7873
Sr-90	0.000E+00	0.0000	0.000E+00	0.0000	0.000E+00	0.0000	0.000E+00	0.0000	0.000E+00	0.0000	2.055E-06	0.0456
Total	0.000E+00	0.0000	0.000E+00	0.0000	0.000E+00	0.0000	0.000E+00	0.0000	0.000E+00	0.0000	4.507E-05	1.0000

** Sum of water independent ground, inhalation, plant, meat, milk, soil
and water dependent water, fish, plant, meat, milk pathways

Excess Cancer Risks CNRS9(irn,i,t) and CNRS9W(irn,i,t) for Inhalation of
Radon and its Decay Products at t= 3.000E+00 years

Radon	Radionuclides							
Pathway	Rn-222	Po-218	Pb-214	Bi-214	Rn-220	Po-216	Pb-212	Bi-212
Water-ind.	0.000E+00	0.000E+00	0.000E+00	0.000E+00	0.000E+00	0.000E+00	0.000E+00	0.000E+00
Water-dep.	0.000E+00	0.000E+00	0.000E+00	0.000E+00	0.000E+00	0.000E+00	0.000E+00	0.000E+00
Total	0.000E+00	0.000E+00	0.000E+00	0.000E+00	0.000E+00	0.000E+00	0.000E+00	0.000E+00

Water-ind. == Water-independent Water-dep. == Water-dependent

Total Excess Cancer Risk CNRS(i,p,t)*** for Initially Existent Radionuclides (i) and Pathways (p)
and Fraction of Total Risk at t= 3.000E+00 years

Water Independent Pathways (Inhalation excludes radon)

Radio-	Ground		Inhalation		Radon		Plant		Meat		Milk		Soil	
Nuclide	risk	fract.	risk	fract.	risk	fract.	risk	fract.	risk	fract.	risk	fract.	risk	fract.
Cs-137	1.479E-06	0.0328	5.621E-12	0.0000	0.000E+00	0.0000	3.818E-08	0.0008	3.338E-09	0.0001	1.090E-09	0.0000	3.003E-10	0.0000
Pb-210	9.871E-09	0.0002	6.042E-09	0.0001	0.000E+00	0.0000	3.440E-06	0.0763	1.176E-08	0.0003	5.729E-09	0.0001	1.082E-07	0.0024
Ra-226	3.205E-05	0.7110	1.321E-08	0.0003	0.000E+00	0.0000	5.720E-06	0.1269	1.799E-08	0.0004	1.601E-08	0.0004	9.940E-08	0.0022
Sr-90	3.086E-08	0.0007	5.875E-11	0.0000	0.000E+00	0.0000	1.971E-06	0.0437	3.980E-08	0.0009	1.182E-08	0.0003	2.067E-09	0.0000
Total	3.357E-05	0.7447	1.932E-08	0.0004	0.000E+00	0.0000	1.117E-05	0.2478	7.289E-08	0.0016	3.465E-08	0.0008	2.100E-07	0.0047

Total Excess Cancer Risk CNRS(i,p,t)*** for Initially Existent Radionuclides (i) and Pathways (p)
and Fraction of Total Risk at t= 3.000E+00 years

Water Dependent Pathways

Radio-	Water		Fish		Radon		Plant		Meat		Milk		All pathways	
Nuclide	risk	fract.	risk	fract.	risk	fract.	risk	fract.	risk	fract.	risk	fract.	risk	fract.
Cs-137	0.000E+00	0.0000	0.000E+00	0.0000	0.000E+00	0.0000	0.000E+00	0.0000	0.000E+00	0.0000	0.000E+00	0.0000	1.522E-06	0.0338
Pb-210	0.000E+00	0.0000	0.000E+00	0.0000	0.000E+00	0.0000	0.000E+00	0.0000	0.000E+00	0.0000	0.000E+00	0.0000	3.581E-06	0.0795
Ra-226	0.000E+00	0.0000	0.000E+00	0.0000	0.000E+00	0.0000	0.000E+00	0.0000	0.000E+00	0.0000	0.000E+00	0.0000	3.791E-05	0.8412
Sr-90	0.000E+00	0.0000	0.000E+00	0.0000	0.000E+00	0.0000	0.000E+00	0.0000	0.000E+00	0.0000	0.000E+00	0.0000	2.055E-06	0.0456
Total	0.000E+00	0.0000	0.000E+00	0.0000	0.000E+00	0.0000	0.000E+00	0.0000	0.000E+00	0.0000	0.000E+00	0.0000	4.507E-05	1.0000

***CNRSI(i,p,t) includes contribution from decay daughter radionuclides

Amount of Intake Quantities QINT(i,p,t) for Individual Radionuclides (i) and Pathways (p)
As pCi/yr at t= 1.000E+01 years

Radio-	Water Independent Pathways (Inhalation w/o radon)					Water Dependent Pathways					Total
Nuclide	Inhalation	Plant	Meat	Milk	Soil	Water	Fish	Plant	Meat	Milk	Ingestion*
Cs-137	1.973E-03	4.013E+01	3.509E+00	1.146E+00	3.157E-01	0.000E+00	0.000E+00	0.000E+00	0.000E+00	0.000E+00	4.510E+01
Pb-210	1.114E-02	5.683E+01	1.957E-01	9.498E-02	1.782E+00	0.000E+00	0.000E+00	0.000E+00	0.000E+00	0.000E+00	5.891E+01
Ra-226	1.103E-02	2.244E+02	6.542E-01	8.009E-01	1.765E+00	0.000E+00	0.000E+00	0.000E+00	0.000E+00	0.000E+00	2.276E+02
Sr-90	5.533E-03	8.441E+02	1.705E+01	5.060E+00	8.851E-01	0.000E+00	0.000E+00	0.000E+00	0.000E+00	0.000E+00	8.671E+02

* Sum of all ingestion pathways, i.e. water independent plant, meat, milk, soil
and water-dependent water, fish, plant, meat, milk pathways

Amount of Intake Quantities QINT9(irn,i,t) and QINT9W(irn,i,t) for Inhalation of
Radon and its Decay Products as pCi/yr at t= 1.000E+01 years

Radon	Radionuclides							
Pathway	Rn-222	Po-218	Pb-214	Bi-214	Rn-220	Po-216	Pb-212	Bi-212
Water-ind.	0.000E+00	0.000E+00	0.000E+00	0.000E+00	0.000E+00	0.000E+00	0.000E+00	0.000E+00
Water-dep.	0.000E+00	0.000E+00	0.000E+00	0.000E+00	0.000E+00	0.000E+00	0.000E+00	0.000E+00
Total	0.000E+00	0.000E+00	0.000E+00	0.000E+00	0.000E+00	0.000E+00	0.000E+00	0.000E+00

Water-ind. == Water-independent Water-dep. == Water-dependent

Excess Cancer Risks CNRS(i,p,t) for Individual Radionuclides (i) and Pathways (p)
and Fraction of Total Risk at t= 1.000E+01 years

Water Independent Pathways (Inhalation excludes radon)

Radio-	Ground		Inhalation		Plant		Meat		Milk		Soil	
Nuclide	risk	fract.	risk	fract.	risk	fract.	risk	fract.	risk	fract.	risk	fract.
Cs-137	1.258E-06	0.0288	4.781E-12	0.0000	3.247E-08	0.0007	2.839E-09	0.0001	9.270E-10	0.0000	2.554E-10	0.0000
Pb-210	1.626E-08	0.0004	9.951E-09	0.0002	5.683E-06	0.1301	1.957E-08	0.0004	9.497E-09	0.0002	1.782E-07	0.0041
Ra-226	3.142E-05	0.7192	8.973E-09	0.0002	3.323E-06	0.0761	9.688E-09	0.0002	1.186E-08	0.0003	2.614E-08	0.0006
Sr-90	2.513E-08	0.0006	4.785E-11	0.0000	1.605E-06	0.0367	3.242E-08	0.0007	9.623E-09	0.0002	1.683E-09	0.0000
Total	3.272E-05	0.7490	1.898E-08	0.0004	1.064E-05	0.2437	6.451E-08	0.0015	3.191E-08	0.0007	2.063E-07	0.0047

Excess Cancer Risks CNRS(i,p,t) for Individual Radionuclides (i) and Pathways (p)
and Fraction of Total Risk at t= 1.000E+01 years

Water Dependent Pathways

Radio-	Water		Fish		Plant		Meat		Milk		All Pathways**	
Nuclide	risk	fract.	risk	fract.	risk	fract.	risk	fract.	risk	fract.	risk	fract.
Cs-137	0.000E+00	0.0000	0.000E+00	0.0000	0.000E+00	0.0000	0.000E+00	0.0000	0.000E+00	0.0000	1.295E-06	0.0296
Pb-210	0.000E+00	0.0000	0.000E+00	0.0000	0.000E+00	0.0000	0.000E+00	0.0000	0.000E+00	0.0000	5.916E-06	0.1354
Ra-226	0.000E+00	0.0000	0.000E+00	0.0000	0.000E+00	0.0000	0.000E+00	0.0000	0.000E+00	0.0000	3.480E-05	0.7966
Sr-90	0.000E+00	0.0000	0.000E+00	0.0000	0.000E+00	0.0000	0.000E+00	0.0000	0.000E+00	0.0000	1.674E-06	0.0383
Total	0.000E+00	0.0000	0.000E+00	0.0000	0.000E+00	0.0000	0.000E+00	0.0000	0.000E+00	0.0000	4.368E-05	1.0000

** Sum of water independent ground, inhalation, plant, meat, milk, soil
and water dependent water, fish, plant, meat, milk pathways

Excess Cancer Risks CNRS9(irn,i,t) and CNRS9W(irn,i,t) for Inhalation of
Radon and its Decay Products at t= 1.000E+01 years

Radon	Radionuclides							
Pathway	Rn-222	Po-218	Pb-214	Bi-214	Rn-220	Po-216	Pb-212	Bi-212
Water-ind.	0.000E+00	0.000E+00	0.000E+00	0.000E+00	0.000E+00	0.000E+00	0.000E+00	0.000E+00
Water-dep.	0.000E+00	0.000E+00	0.000E+00	0.000E+00	0.000E+00	0.000E+00	0.000E+00	0.000E+00
Total	0.000E+00	0.000E+00	0.000E+00	0.000E+00	0.000E+00	0.000E+00	0.000E+00	0.000E+00

Water-ind. == Water-independent Water-dep. == Water-dependent

Total Excess Cancer Risk CNRS(i,p,t)*** for Initially Existent Radionuclides (i) and Pathways (p)
and Fraction of Total Risk at t= 1.000E+01 years

Water Independent Pathways (Inhalation excludes radon)

Radio-	Ground		Inhalation		Radon		Plant		Meat		Milk		Soil	
Nuclide	risk	fract.	risk	fract.	risk	fract.	risk	fract.	risk	fract.	risk	fract.	risk	fract.
Cs-137	1.258E-06	0.0288	4.781E-12	0.0000	0.000E+00	0.0000	3.247E-08	0.0007	2.839E-09	0.0001	9.270E-10	0.0000	2.554E-10	0.0000
Pb-210	7.849E-09	0.0002	4.805E-09	0.0001	0.000E+00	0.0000	2.735E-06	0.0626	9.350E-09	0.0002	4.556E-09	0.0001	8.604E-08	0.0020
Ra-226	3.142E-05	0.7194	1.412E-08	0.0003	0.000E+00	0.0000	6.271E-06	0.1436	1.991E-08	0.0005	1.680E-08	0.0004	1.183E-07	0.0027
Sr-90	2.513E-08	0.0006	4.785E-11	0.0000	0.000E+00	0.0000	1.605E-06	0.0367	3.242E-08	0.0007	9.623E-09	0.0002	1.683E-09	0.0000
Total	3.272E-05	0.7490	1.898E-08	0.0004	0.000E+00	0.0000	1.064E-05	0.2437	6.451E-08	0.0015	3.191E-08	0.0007	2.063E-07	0.0047

Total Excess Cancer Risk CNRS(i,p,t)*** for Initially Existent Radionuclides (i) and Pathways (p)
and Fraction of Total Risk at t= 1.000E+01 years

Water Dependent Pathways

Radio-	Water		Fish		Radon		Plant		Meat		Milk		All pathways	
Nuclide	risk	fract.	risk	fract.	risk	fract.	risk	fract.	risk	fract.	risk	fract.	risk	fract.
Cs-137	0.000E+00	0.0000	0.000E+00	0.0000	0.000E+00	0.0000	0.000E+00	0.0000	0.000E+00	0.0000	0.000E+00	0.0000	1.295E-06	0.0296
Pb-210	0.000E+00	0.0000	0.000E+00	0.0000	0.000E+00	0.0000	0.000E+00	0.0000	0.000E+00	0.0000	0.000E+00	0.0000	2.848E-06	0.0652
Ra-226	0.000E+00	0.0000	0.000E+00	0.0000	0.000E+00	0.0000	0.000E+00	0.0000	0.000E+00	0.0000	0.000E+00	0.0000	3.786E-05	0.8668
Sr-90	0.000E+00	0.0000	0.000E+00	0.0000	0.000E+00	0.0000	0.000E+00	0.0000	0.000E+00	0.0000	0.000E+00	0.0000	1.674E-06	0.0383
Total	0.000E+00	0.0000	0.000E+00	0.0000	0.000E+00	0.0000	0.000E+00	0.0000	0.000E+00	0.0000	0.000E+00	0.0000	4.368E-05	1.0000

***CNRSI(i,p,t) includes contribution from decay daughter radionuclides

Amount of Intake Quantities QINT(i,p,t) for Individual Radionuclides (i) and Pathways (p)
As pCi/yr at t= 3.000E+01 years

Radio-	Water Independent Pathways (Inhalation w/o radon)					Water Dependent Pathways					Total
Nuclide	Inhalation	Plant	Meat	Milk	Soil	Water	Fish	Plant	Meat	Milk	Ingestion*
Cs-137	1.242E-03	2.526E+01	2.209E+00	7.214E-01	1.987E-01	0.000E+00	0.000E+00	0.000E+00	0.000E+00	0.000E+00	2.839E+01
Pb-210	1.067E-02	5.441E+01	1.873E-01	9.092E-02	1.706E+00	0.000E+00	0.000E+00	0.000E+00	0.000E+00	0.000E+00	5.639E+01
Ra-226	1.043E-02	2.121E+02	6.184E-01	7.572E-01	1.668E+00	0.000E+00	0.000E+00	0.000E+00	0.000E+00	0.000E+00	2.152E+02
Sr-90	3.078E-03	4.696E+02	9.483E+00	2.815E+00	4.924E-01	0.000E+00	0.000E+00	0.000E+00	0.000E+00	0.000E+00	4.824E+02

* Sum of all ingestion pathways, i.e. water independent plant, meat, milk, soil
and water-dependent water, fish, plant, meat, milk pathways

Amount of Intake Quantities QINT9(irn,i,t) and QINT9W(irn,i,t) for Inhalation of
Radon and its Decay Products as pCi/yr at t= 3.000E+01 years

Radon	Radionuclides							
Pathway	Rn-222	Po-218	Pb-214	Bi-214	Rn-220	Po-216	Pb-212	Bi-212
Water-ind.	0.000E+00	0.000E+00	0.000E+00	0.000E+00	0.000E+00	0.000E+00	0.000E+00	0.000E+00
Water-dep.	0.000E+00	0.000E+00	0.000E+00	0.000E+00	0.000E+00	0.000E+00	0.000E+00	0.000E+00
Total	0.000E+00	0.000E+00	0.000E+00	0.000E+00	0.000E+00	0.000E+00	0.000E+00	0.000E+00

Water-ind. == Water-independent Water-dep. == Water-dependent

Excess Cancer Risks CNRS(i,p,t) for Individual Radionuclides (i) and Pathways (p)
and Fraction of Total Risk at t= 3.000E+01 years

Water Independent Pathways (Inhalation excludes radon)

Radio-	Ground		Inhalation		Plant		Meat		Milk		Soil	
Nuclide	risk	fract.	risk	fract.	risk	fract.	risk	fract.	risk	fract.	risk	fract.
Cs-137	7.920E-07	0.0197	3.010E-12	0.0000	2.044E-08	0.0005	1.787E-09	0.0000	5.836E-10	0.0000	1.608E-10	0.0000
Pb-210	1.550E-08	0.0004	9.486E-09	0.0002	5.417E-06	0.1345	1.865E-08	0.0005	9.053E-09	0.0002	1.699E-07	0.0042
Ra-226	2.970E-05	0.7373	8.483E-09	0.0002	3.141E-06	0.0780	9.159E-09	0.0002	1.121E-08	0.0003	2.471E-08	0.0006
Sr-90	1.398E-08	0.0003	2.662E-11	0.0000	8.930E-07	0.0222	1.803E-08	0.0004	5.354E-09	0.0001	9.364E-10	0.0000
Total	3.052E-05	0.7577	1.800E-08	0.0004	9.472E-06	0.2351	4.763E-08	0.0012	2.620E-08	0.0007	1.957E-07	0.0049

Excess Cancer Risks CNRS(i,p,t) for Individual Radionuclides (i) and Pathways (p)
and Fraction of Total Risk at t= 3.000E+01 years

Water Dependent Pathways

Radio-	Water		Fish		Plant		Meat		Milk		All Pathways**	
Nuclide	risk	fract.	risk	fract.	risk	fract.	risk	fract.	risk	fract.	risk	fract.
Cs-137	0.000E+00	0.0000	0.000E+00	0.0000	0.000E+00	0.0000	0.000E+00	0.0000	0.000E+00	0.0000	8.150E-07	0.0202
Pb-210	0.000E+00	0.0000	0.000E+00	0.0000	0.000E+00	0.0000	0.000E+00	0.0000	0.000E+00	0.0000	5.640E-06	0.1400
Ra-226	0.000E+00	0.0000	0.000E+00	0.0000	0.000E+00	0.0000	0.000E+00	0.0000	0.000E+00	0.0000	3.290E-05	0.8166
Sr-90	0.000E+00	0.0000	0.000E+00	0.0000	0.000E+00	0.0000	0.000E+00	0.0000	0.000E+00	0.0000	9.313E-07	0.0231
Total	0.000E+00	0.0000	0.000E+00	0.0000	0.000E+00	0.0000	0.000E+00	0.0000	0.000E+00	0.0000	4.028E-05	1.0000

** Sum of water independent ground, inhalation, plant, meat, milk, soil
and water dependent water, fish, plant, meat, milk pathways

Excess Cancer Risks CNRS9(irn,i,t) and CNRS9W(irn,i,t) for Inhalation of
Radon and its Decay Products at t= 3.000E+01 years

Radon	Radionuclides							
Pathway	Rn-222	Po-218	Pb-214	Bi-214	Rn-220	Po-216	Pb-212	Bi-212
Water-ind.	0.000E+00	0.000E+00	0.000E+00	0.000E+00	0.000E+00	0.000E+00	0.000E+00	0.000E+00
Water-dep.	0.000E+00	0.000E+00	0.000E+00	0.000E+00	0.000E+00	0.000E+00	0.000E+00	0.000E+00
Total	0.000E+00	0.000E+00	0.000E+00	0.000E+00	0.000E+00	0.000E+00	0.000E+00	0.000E+00

Water-ind. == Water-independent Water-dep. == Water-dependent

Total Excess Cancer Risk CNRS(i,p,t)*** for Initially Existent Radionuclides (i) and Pathways (p)
and Fraction of Total Risk at t= 3.000E+01 years

Water Independent Pathways (Inhalation excludes radon)

Radio-	Ground		Inhalation		Radon		Plant		Meat		Milk		Soil	
Nuclide	risk	fract.	risk	fract.	risk	fract.	risk	fract.	risk	fract.	risk	fract.	risk	fract.
Cs-137	7.920E-07	0.0197	3.010E-12	0.0000	0.000E+00	0.0000	2.044E-08	0.0005	1.787E-09	0.0000	5.836E-10	0.0000	1.608E-10	0.0000
Pb-210	4.077E-09	0.0001	2.496E-09	0.0001	0.000E+00	0.0000	1.421E-06	0.0353	4.857E-09	0.0001	2.367E-09	0.0001	4.470E-08	0.0011
Ra-226	2.971E-05	0.7376	1.547E-08	0.0004	0.000E+00	0.0000	7.138E-06	0.1772	2.295E-08	0.0006	1.790E-08	0.0004	1.499E-07	0.0037
Sr-90	1.398E-08	0.0003	2.662E-11	0.0000	0.000E+00	0.0000	8.930E-07	0.0222	1.803E-08	0.0004	5.354E-09	0.0001	9.364E-10	0.0000
Total	3.052E-05	0.7577	1.800E-08	0.0004	0.000E+00	0.0000	9.472E-06	0.2351	4.763E-08	0.0012	2.620E-08	0.0007	1.957E-07	0.0049

Total Excess Cancer Risk CNRS(i,p,t)*** for Initially Existent Radionuclides (i) and Pathways (p)
and Fraction of Total Risk at t= 3.000E+01 years

Water Dependent Pathways

Radio-	Water		Fish		Radon		Plant		Meat		Milk		All pathways	
Nuclide	risk	fract.	risk	fract.	risk	fract.	risk	fract.	risk	fract.	risk	fract.	risk	fract.
Cs-137	0.000E+00	0.0000	0.000E+00	0.0000	0.000E+00	0.0000	0.000E+00	0.0000	0.000E+00	0.0000	0.000E+00	0.0000	8.150E-07	0.0202
Pb-210	0.000E+00	0.0000	0.000E+00	0.0000	0.000E+00	0.0000	0.000E+00	0.0000	0.000E+00	0.0000	0.000E+00	0.0000	1.479E-06	0.0367
Ra-226	0.000E+00	0.0000	0.000E+00	0.0000	0.000E+00	0.0000	0.000E+00	0.0000	0.000E+00	0.0000	0.000E+00	0.0000	3.706E-05	0.9199
Sr-90	0.000E+00	0.0000	0.000E+00	0.0000	0.000E+00	0.0000	0.000E+00	0.0000	0.000E+00	0.0000	0.000E+00	0.0000	9.313E-07	0.0231
Total	0.000E+00	0.0000	0.000E+00	0.0000	0.000E+00	0.0000	0.000E+00	0.0000	0.000E+00	0.0000	0.000E+00	0.0000	4.028E-05	1.0000

***CNRSI(i,p,t) includes contribution from decay daughter radionuclides

Amount of Intake Quantities QINT(i,p,t) for Individual Radionuclides (i) and Pathways (p)
As pCi/yr at t= 1.000E+02 years

Radio-	Water Independent Pathways (Inhalation w/o radon)					Water Dependent Pathways					Total
Nuclide	Inhalation	Plant	Meat	Milk	Soil	Water	Fish	Plant	Meat	Milk	Ingestion*
Cs-137	2.459E-04	5.000E+00	4.372E-01	1.428E-01	3.933E-02	0.000E+00	0.000E+00	0.000E+00	0.000E+00	0.000E+00	5.620E+00
Pb-210	8.880E-03	4.530E+01	1.560E-01	7.569E-02	1.421E+00	0.000E+00	0.000E+00	0.000E+00	0.000E+00	0.000E+00	4.695E+01
Ra-226	8.569E-03	1.743E+02	5.081E-01	6.221E-01	1.371E+00	0.000E+00	0.000E+00	0.000E+00	0.000E+00	0.000E+00	1.768E+02
Sr-90	3.953E-04	6.031E+01	1.218E+00	3.616E-01	6.324E-02	0.000E+00	0.000E+00	0.000E+00	0.000E+00	0.000E+00	6.195E+01

* Sum of all ingestion pathways, i.e. water independent plant, meat, milk, soil
and water-dependent water, fish, plant, meat, milk pathways

Amount of Intake Quantities QINT9(irn,i,t) and QINT9W(irn,i,t) for Inhalation of
Radon and its Decay Products as pCi/yr at t= 1.000E+02 years

Radon	Radionuclides							
Pathway	Rn-222	Po-218	Pb-214	Bi-214	Rn-220	Po-216	Pb-212	Bi-212
Water-ind.	0.000E+00	0.000E+00	0.000E+00	0.000E+00	0.000E+00	0.000E+00	0.000E+00	0.000E+00
Water-dep.	0.000E+00	0.000E+00	0.000E+00	0.000E+00	0.000E+00	0.000E+00	0.000E+00	0.000E+00
Total	0.000E+00	0.000E+00	0.000E+00	0.000E+00	0.000E+00	0.000E+00	0.000E+00	0.000E+00

Water-ind. == Water-independent Water-dep. == Water-dependent

Excess Cancer Risks CNRS(i,p,t) for Individual Radionuclides (i) and Pathways (p)
and Fraction of Total Risk at t= 1.000E+02 years

Water Independent Pathways (Inhalation excludes radon)

Radio-	Ground		Inhalation		Plant		Meat		Milk		Soil	
Nuclide	risk	fract.	risk	fract.	risk	fract.	risk	fract.	risk	fract.	risk	fract.
Cs-137	1.568E-07	0.0049	5.957E-13	0.0000	4.045E-09	0.0001	3.537E-10	0.0000	1.155E-10	0.0000	3.182E-11	0.0000
Pb-210	1.284E-08	0.0004	7.862E-09	0.0002	4.490E-06	0.1404	1.546E-08	0.0005	7.503E-09	0.0002	1.408E-07	0.0044
Ra-226	2.440E-05	0.7630	6.970E-09	0.0002	2.581E-06	0.0807	7.525E-09	0.0002	9.214E-09	0.0003	2.030E-08	0.0006
Sr-90	1.796E-09	0.0001	3.419E-12	0.0000	1.147E-07	0.0036	2.316E-09	0.0001	6.876E-10	0.0000	1.203E-10	0.0000
Total	2.457E-05	0.7684	1.484E-08	0.0005	7.190E-06	0.2248	2.565E-08	0.0008	1.752E-08	0.0005	1.613E-07	0.0050

Excess Cancer Risks CNRS(i,p,t) for Individual Radionuclides (i) and Pathways (p)
and Fraction of Total Risk at t= 1.000E+02 years

Water Dependent Pathways

Radio-	Water		Fish		Plant		Meat		Milk		All Pathways**	
Nuclide	risk	fract.	risk	fract.	risk	fract.	risk	fract.	risk	fract.	risk	fract.
Cs-137	0.000E+00	0.0000	0.000E+00	0.0000	0.000E+00	0.0000	0.000E+00	0.0000	0.000E+00	0.0000	1.613E-07	0.0050
Pb-210	0.000E+00	0.0000	0.000E+00	0.0000	0.000E+00	0.0000	0.000E+00	0.0000	0.000E+00	0.0000	4.674E-06	0.1461
Ra-226	0.000E+00	0.0000	0.000E+00	0.0000	0.000E+00	0.0000	0.000E+00	0.0000	0.000E+00	0.0000	2.703E-05	0.8451
Sr-90	0.000E+00	0.0000	0.000E+00	0.0000	0.000E+00	0.0000	0.000E+00	0.0000	0.000E+00	0.0000	1.196E-07	0.0037
Total	0.000E+00	0.0000	0.000E+00	0.0000	0.000E+00	0.0000	0.000E+00	0.0000	0.000E+00	0.0000	3.198E-05	1.0000

** Sum of water independent ground, inhalation, plant, meat, milk, soil
and water dependent water, fish, plant, meat, milk pathways

Excess Cancer Risks CNRS9(irn,i,t) and CNRS9W(irn,i,t) for Inhalation of
Radon and its Decay Products at t= 1.000E+02 years

Radon	Radionuclides							
Pathway	Rn-222	Po-218	Pb-214	Bi-214	Rn-220	Po-216	Pb-212	Bi-212
Water-ind.	0.000E+00	0.000E+00	0.000E+00	0.000E+00	0.000E+00	0.000E+00	0.000E+00	0.000E+00
Water-dep.	0.000E+00	0.000E+00	0.000E+00	0.000E+00	0.000E+00	0.000E+00	0.000E+00	0.000E+00
Total	0.000E+00	0.000E+00	0.000E+00	0.000E+00	0.000E+00	0.000E+00	0.000E+00	0.000E+00

Water-ind. == Water-independent Water-dep. == Water-dependent

Total Excess Cancer Risk CNRS(i,p,t)*** for Initially Existent Radionuclides (i) and Pathways (p)
and Fraction of Total Risk at t= 1.000E+02 years

Water Independent Pathways (Inhalation excludes radon)

Radio-	Ground		Inhalation		Radon		Plant		Meat		Milk		Soil	
Nuclide	risk	fract.	risk	fract.	risk	fract.	risk	fract.	risk	fract.	risk	fract.	risk	fract.
Cs-137	1.568E-07	0.0049	5.957E-13	0.0000	0.000E+00	0.0000	4.045E-09	0.0001	3.537E-10	0.0000	1.155E-10	0.0000	3.182E-11	0.0000
Pb-210	4.120E-10	0.0000	2.522E-10	0.0000	0.000E+00	0.0000	1.436E-07	0.0045	4.908E-10	0.0000	2.391E-10	0.0000	4.516E-09	0.0001
Ra-226	2.442E-05	0.7634	1.458E-08	0.0005	0.000E+00	0.0000	6.927E-06	0.2166	2.249E-08	0.0007	1.648E-08	0.0005	1.566E-07	0.0049
Sr-90	1.796E-09	0.0001	3.419E-12	0.0000	0.000E+00	0.0000	1.147E-07	0.0036	2.316E-09	0.0001	6.876E-10	0.0000	1.203E-10	0.0000
Total	2.457E-05	0.7684	1.484E-08	0.0005	0.000E+00	0.0000	7.190E-06	0.2248	2.565E-08	0.0008	1.752E-08	0.0005	1.613E-07	0.0050

Total Excess Cancer Risk CNRS(i,p,t)*** for Initially Existent Radionuclides (i) and Pathways (p)
and Fraction of Total Risk at t= 1.000E+02 years

Water Dependent Pathways

Radio-	Water		Fish		Radon		Plant		Meat		Milk		All pathways	
Nuclide	risk	fract.	risk	fract.	risk	fract.	risk	fract.	risk	fract.	risk	fract.	risk	fract.
Cs-137	0.000E+00	0.0000	0.000E+00	0.0000	0.000E+00	0.0000	0.000E+00	0.0000	0.000E+00	0.0000	0.000E+00	0.0000	1.613E-07	0.0050
Pb-210	0.000E+00	0.0000	0.000E+00	0.0000	0.000E+00	0.0000	0.000E+00	0.0000	0.000E+00	0.0000	0.000E+00	0.0000	1.495E-07	0.0047
Ra-226	0.000E+00	0.0000	0.000E+00	0.0000	0.000E+00	0.0000	0.000E+00	0.0000	0.000E+00	0.0000	0.000E+00	0.0000	3.155E-05	0.9865
Sr-90	0.000E+00	0.0000	0.000E+00	0.0000	0.000E+00	0.0000	0.000E+00	0.0000	0.000E+00	0.0000	0.000E+00	0.0000	1.196E-07	0.0037
Total	0.000E+00	0.0000	0.000E+00	0.0000	0.000E+00	0.0000	0.000E+00	0.0000	0.000E+00	0.0000	0.000E+00	0.0000	3.198E-05	1.0000

***CNRSI(i,p,t) includes contribution from decay daughter radionuclides

Amount of Intake Quantities QINT(i,p,t) for Individual Radionuclides (i) and Pathways (p)
As pCi/yr at t= 3.000E+02 years

Radio-	Water Independent Pathways (Inhalation w/o radon)					Water Dependent Pathways					Total
Nuclide	Inhalation	Plant	Meat	Milk	Soil	Water	Fish	Plant	Meat	Milk	Ingestion*
Cs-137	2.403E-06	4.886E-02	4.273E-03	1.395E-03	3.844E-04	0.000E+00	0.000E+00	0.000E+00	0.000E+00	0.000E+00	5.492E-02
Pb-210	5.074E-03	2.588E+01	8.912E-02	4.326E-02	8.118E-01	0.000E+00	0.000E+00	0.000E+00	0.000E+00	0.000E+00	2.683E+01
Ra-226	4.888E-03	9.941E+01	2.898E-01	3.549E-01	7.819E-01	0.000E+00	0.000E+00	0.000E+00	0.000E+00	0.000E+00	1.008E+02
Sr-90	1.123E-06	1.713E-01	3.459E-03	1.027E-03	1.796E-04	7.953E-02	4.035E-05	1.681E-03	1.746E-04	9.532E-05	2.575E-01

* Sum of all ingestion pathways, i.e. water independent plant, meat, milk, soil
and water-dependent water, fish, plant, meat, milk pathways

Amount of Intake Quantities QINT9(irn,i,t) and QINT9W(irn,i,t) for Inhalation of
Radon and its Decay Products as pCi/yr at t= 3.000E+02 years

Radon	Radionuclides							
Pathway	Rn-222	Po-218	Pb-214	Bi-214	Rn-220	Po-216	Pb-212	Bi-212
Water-ind.	0.000E+00	0.000E+00	0.000E+00	0.000E+00	0.000E+00	0.000E+00	0.000E+00	0.000E+00
Water-dep.	0.000E+00	0.000E+00	0.000E+00	0.000E+00	0.000E+00	0.000E+00	0.000E+00	0.000E+00
Total	0.000E+00	0.000E+00	0.000E+00	0.000E+00	0.000E+00	0.000E+00	0.000E+00	0.000E+00

Water-ind. == Water-independent Water-dep. == Water-dependent

Excess Cancer Risks CNRS(i,p,t) for Individual Radionuclides (i) and Pathways (p)
and Fraction of Total Risk at t= 3.000E+02 years

Water Independent Pathways (Inhalation excludes radon)

Radio-	Ground		Inhalation		Plant		Meat		Milk		Soil	
Nuclide	risk	fract.	risk	fract.	risk	fract.	risk	fract.	risk	fract.	risk	fract.
Cs-137	1.532E-09	0.0001	5.821E-15	0.0000	3.953E-11	0.0000	3.457E-12	0.0000	1.129E-12	0.0000	3.109E-13	0.0000
Pb-210	7.336E-09	0.0004	4.490E-09	0.0002	2.564E-06	0.1418	8.829E-09	0.0005	4.285E-09	0.0002	8.042E-08	0.0044
Ra-226	1.392E-05	0.7695	3.976E-09	0.0002	1.472E-06	0.0814	4.293E-09	0.0002	5.256E-09	0.0003	1.158E-08	0.0006
Sr-90	5.101E-12	0.0000	9.711E-15	0.0000	3.257E-10	0.0000	6.578E-12	0.0000	1.953E-12	0.0000	3.416E-13	0.0000
Total	1.393E-05	0.7700	8.466E-09	0.0005	4.037E-06	0.2232	1.313E-08	0.0007	9.544E-09	0.0005	9.200E-08	0.0051

Excess Cancer Risks CNRS(i,p,t) for Individual Radionuclides (i) and Pathways (p)
and Fraction of Total Risk at t= 3.000E+02 years

Water Dependent Pathways

Radio-	Water		Fish		Plant		Meat		Milk		All Pathways**	
Nuclide	risk	fract.	risk	fract.	risk	fract.	risk	fract.	risk	fract.	risk	fract.
Cs-137	0.000E+00	0.0000	0.000E+00	0.0000	0.000E+00	0.0000	0.000E+00	0.0000	0.000E+00	0.0000	1.576E-09	0.0001
Pb-210	0.000E+00	0.0000	0.000E+00	0.0000	0.000E+00	0.0000	0.000E+00	0.0000	0.000E+00	0.0000	2.670E-06	0.1476
Ra-226	0.000E+00	0.0000	0.000E+00	0.0000	0.000E+00	0.0000	0.000E+00	0.0000	0.000E+00	0.0000	1.542E-05	0.8523
Sr-90	1.365E-10	0.0000	8.917E-14	0.0000	3.715E-12	0.0000	3.860E-13	0.0000	2.107E-13	0.0000	4.806E-10	0.0000
Total	1.365E-10	0.0000	8.917E-14	0.0000	3.715E-12	0.0000	3.860E-13	0.0000	2.107E-13	0.0000	1.809E-05	1.0000

** Sum of water independent ground, inhalation, plant, meat, milk, soil
and water dependent water, fish, plant, meat, milk pathways

Excess Cancer Risks CNRS9(irn,i,t) and CNRS9W(irn,i,t) for Inhalation of
Radon and its Decay Products at t= 3.000E+02 years

Radon	Radionuclides							
Pathway	Rn-222	Po-218	Pb-214	Bi-214	Rn-220	Po-216	Pb-212	Bi-212
Water-ind.	0.000E+00	0.000E+00	0.000E+00	0.000E+00	0.000E+00	0.000E+00	0.000E+00	0.000E+00
Water-dep.	0.000E+00	0.000E+00	0.000E+00	0.000E+00	0.000E+00	0.000E+00	0.000E+00	0.000E+00
Total	0.000E+00	0.000E+00	0.000E+00	0.000E+00	0.000E+00	0.000E+00	0.000E+00	0.000E+00

Water-ind. == Water-independent Water-dep. == Water-dependent

Total Excess Cancer Risk CNRS(i,p,t)*** for Initially Existent Radionuclides (i) and Pathways (p)
and Fraction of Total Risk at t= 3.000E+02 years

Water Independent Pathways (Inhalation excludes radon)

Radio-	Ground		Inhalation		Radon		Plant		Meat		Milk		Soil	
Nuclide	risk	fract.	risk	fract.	risk	fract.	risk	fract.	risk	fract.	risk	fract.	risk	fract.
Cs-137	1.532E-09	0.0001	5.821E-15	0.0000	0.000E+00	0.0000	3.953E-11	0.0000	3.457E-12	0.0000	1.129E-12	0.0000	3.109E-13	0.0000
Pb-210	5.897E-13	0.0000	3.610E-13	0.0000	0.000E+00	0.0000	2.055E-10	0.0000	7.025E-13	0.0000	3.423E-13	0.0000	6.464E-12	0.0000
Ra-226	1.393E-05	0.7699	8.466E-09	0.0005	0.000E+00	0.0000	4.036E-06	0.2231	1.312E-08	0.0007	9.540E-09	0.0005	9.199E-08	0.0051
Sr-90	5.101E-12	0.0000	9.711E-15	0.0000	0.000E+00	0.0000	3.257E-10	0.0000	6.578E-12	0.0000	1.953E-12	0.0000	3.416E-13	0.0000
Total	1.393E-05	0.7700	8.466E-09	0.0005	0.000E+00	0.0000	4.037E-06	0.2232	1.313E-08	0.0007	9.544E-09	0.0005	9.200E-08	0.0051

Total Excess Cancer Risk CNRS(i,p,t)*** for Initially Existent Radionuclides (i) and Pathways (p)
and Fraction of Total Risk at t= 3.000E+02 years

Water Dependent Pathways

Radio-	Water		Fish		Radon		Plant		Meat		Milk		All pathways	
Nuclide	risk	fract.	risk	fract.	risk	fract.	risk	fract.	risk	fract.	risk	fract.	risk	fract.
Cs-137	0.000E+00	0.0000	0.000E+00	0.0000	0.000E+00	0.0000	0.000E+00	0.0000	0.000E+00	0.0000	0.000E+00	0.0000	1.576E-09	0.0001
Pb-210	0.000E+00	0.0000	0.000E+00	0.0000	0.000E+00	0.0000	0.000E+00	0.0000	0.000E+00	0.0000	0.000E+00	0.0000	2.139E-10	0.0000
Ra-226	0.000E+00	0.0000	0.000E+00	0.0000	0.000E+00	0.0000	0.000E+00	0.0000	0.000E+00	0.0000	0.000E+00	0.0000	1.809E-05	0.9999
Sr-90	1.365E-10	0.0000	8.917E-14	0.0000	0.000E+00	0.0000	3.715E-12	0.0000	3.860E-13	0.0000	2.107E-13	0.0000	4.806E-10	0.0000
Total	1.365E-10	0.0000	8.917E-14	0.0000	0.000E+00	0.0000	3.715E-12	0.0000	3.860E-13	0.0000	2.107E-13	0.0000	1.809E-05	1.0000

***CNRSI(i,p,t) includes contribution from decay daughter radionuclides

Amount of Intake Quantities QINT(i,p,t) for Individual Radionuclides (i) and Pathways (p)
As pCi/yr at t= 1.000E+03 years

Radio-	Water Independent Pathways (Inhalation w/o radon)					Water Dependent Pathways					Total
Nuclide	Inhalation	Plant	Meat	Milk	Soil	Water	Fish	Plant	Meat	Milk	Ingestion*
Cs-137	2.216E-13	4.508E-09	3.942E-10	1.287E-10	3.546E-11	0.000E+00	0.000E+00	0.000E+00	0.000E+00	0.000E+00	5.066E-09
Pb-210	7.113E-04	3.629E+00	1.249E-02	6.064E-03	1.138E-01	4.279E+01	8.964E-02	8.413E-01	9.371E-03	7.678E-03	4.750E+01
Ra-226	6.852E-04	1.394E+01	4.063E-02	4.974E-02	1.096E-01	6.088E+01	3.693E-02	1.206E+00	1.663E-02	3.639E-02	7.632E+01
Sr-90	1.371E-15	2.092E-10	4.224E-12	1.254E-12	2.193E-13	1.304E-09	6.616E-13	2.757E-11	2.868E-12	1.564E-12	1.552E-09

* Sum of all ingestion pathways, i.e. water independent plant, meat, milk, soil
and water-dependent water, fish, plant, meat, milk pathways

Amount of Intake Quantities QINT9(irn,i,t) and QINT9W(irn,i,t) for Inhalation of
Radon and its Decay Products as pCi/yr at t= 1.000E+03 years

Radon	Radionuclides							
Pathway	Rn-222	Po-218	Pb-214	Bi-214	Rn-220	Po-216	Pb-212	Bi-212
Water-ind.	0.000E+00	0.000E+00	0.000E+00	0.000E+00	0.000E+00	0.000E+00	0.000E+00	0.000E+00
Water-dep.	0.000E+00	0.000E+00	0.000E+00	0.000E+00	0.000E+00	0.000E+00	0.000E+00	0.000E+00
Total	0.000E+00	0.000E+00	0.000E+00	0.000E+00	0.000E+00	0.000E+00	0.000E+00	0.000E+00

Water-ind. == Water-independent Water-dep. == Water-dependent

Excess Cancer Risks CNRS(i,p,t) for Individual Radionuclides (i) and Pathways (p)
and Fraction of Total Risk at t= 1.000E+03 years

Water Independent Pathways (Inhalation excludes radon)

Radio-	Ground		Inhalation		Plant		Meat		Milk		Soil	
Nuclide	risk	fract.	risk	fract.	risk	fract.	risk	fract.	risk	fract.	risk	fract.
Cs-137	1.413E-16	0.0000	5.369E-22	0.0000	3.646E-18	0.0000	3.189E-19	0.0000	1.041E-19	0.0000	2.868E-20	0.0000
Pb-210	1.028E-09	0.0002	6.294E-10	0.0001	3.594E-07	0.0529	1.238E-09	0.0002	6.007E-10	0.0001	1.127E-08	0.0017
Ra-226	1.951E-06	0.2870	5.573E-10	0.0001	2.064E-07	0.0304	6.017E-10	0.0001	7.367E-10	0.0001	1.623E-09	0.0002
Sr-90	6.228E-21	0.0000	1.186E-23	0.0000	3.978E-19	0.0000	8.033E-21	0.0000	2.385E-21	0.0000	4.171E-22	0.0000
Total	1.952E-06	0.2871	1.187E-09	0.0002	5.658E-07	0.0832	1.839E-09	0.0003	1.337E-09	0.0002	1.290E-08	0.0019

Excess Cancer Risks CNRS(i,p,t) for Individual Radionuclides (i) and Pathways (p)
and Fraction of Total Risk at t= 1.000E+03 years

Water Dependent Pathways

Radio-	Water		Fish		Plant		Meat		Milk		All Pathways**	
Nuclide	risk	fract.	risk	fract.	risk	fract.	risk	fract.	risk	fract.	risk	fract.
Cs-137	0.000E+00	0.0000	0.000E+00	0.0000	0.000E+00	0.0000	0.000E+00	0.0000	0.000E+00	0.0000	1.454E-16	0.0000
Pb-210	3.437E-06	0.5055	9.319E-09	0.0014	8.747E-08	0.0129	9.742E-10	0.0001	7.982E-10	0.0001	3.910E-06	0.5750
Ra-226	7.084E-07	0.1042	5.738E-10	0.0001	1.873E-08	0.0028	2.584E-10	0.0000	5.653E-10	0.0001	2.890E-06	0.4250
Sr-90	1.916E-18	0.0000	1.252E-21	0.0000	5.217E-20	0.0000	5.429E-21	0.0000	2.960E-21	0.0000	2.393E-18	0.0000
Total	4.145E-06	0.6097	9.893E-09	0.0015	1.062E-07	0.0156	1.233E-09	0.0002	1.364E-09	0.0002	6.799E-06	1.0000

** Sum of water independent ground, inhalation, plant, meat, milk, soil
and water dependent water, fish, plant, meat, milk pathways

Excess Cancer Risks CNRS9(irn,i,t) and CNRS9W(irn,i,t) for Inhalation of
Radon and its Decay Products at t= 1.000E+03 years

Radon	Radionuclides							
Pathway	Rn-222	Po-218	Pb-214	Bi-214	Rn-220	Po-216	Pb-212	Bi-212
Water-ind.	0.000E+00	0.000E+00	0.000E+00	0.000E+00	0.000E+00	0.000E+00	0.000E+00	0.000E+00
Water-dep.	0.000E+00	0.000E+00	0.000E+00	0.000E+00	0.000E+00	0.000E+00	0.000E+00	0.000E+00
Total	0.000E+00	0.000E+00	0.000E+00	0.000E+00	0.000E+00	0.000E+00	0.000E+00	0.000E+00

Water-ind. == Water-independent Water-dep. == Water-dependent

Total Excess Cancer Risk CNRS(i,p,t)*** for Initially Existent Radionuclides (i) and Pathways (p)
and Fraction of Total Risk at t= 1.000E+03 years

Water Independent Pathways (Inhalation excludes radon)

Radio-	Ground		Inhalation		Radon		Plant		Meat		Milk		Soil	
Nuclide	risk	fract.	risk	fract.	risk	fract.	risk	fract.	risk	fract.	risk	fract.	risk	fract.
Cs-137	1.413E-16	0.0000	5.369E-22	0.0000	0.000E+00	0.0000	3.646E-18	0.0000	3.189E-19	0.0000	1.041E-19	0.0000	2.868E-20	0.0000
Pb-210	6.541E-23	0.0000	4.004E-23	0.0000	0.000E+00	0.0000	2.279E-20	0.0000	7.792E-23	0.0000	3.797E-23	0.0000	7.171E-22	0.0000
Ra-226	1.952E-06	0.2871	1.187E-09	0.0002	0.000E+00	0.0000	5.658E-07	0.0832	1.839E-09	0.0003	1.337E-09	0.0002	1.290E-08	0.0019
Sr-90	6.228E-21	0.0000	1.186E-23	0.0000	0.000E+00	0.0000	3.978E-19	0.0000	8.033E-21	0.0000	2.385E-21	0.0000	4.171E-22	0.0000
Total	1.952E-06	0.2871	1.187E-09	0.0002	0.000E+00	0.0000	5.658E-07	0.0832	1.839E-09	0.0003	1.337E-09	0.0002	1.290E-08	0.0019

Total Excess Cancer Risk CNRS(i,p,t)*** for Initially Existent Radionuclides (i) and Pathways (p)
and Fraction of Total Risk at t= 1.000E+03 years

Water Dependent Pathways

Radio-	Water		Fish		Radon		Plant		Meat		Milk		All pathways	
Nuclide	risk	fract.	risk	fract.	risk	fract.	risk	fract.	risk	fract.	risk	fract.	risk	fract.
Cs-137	0.000E+00	0.0000	0.000E+00	0.0000	0.000E+00	0.0000	0.000E+00	0.0000	0.000E+00	0.0000	0.000E+00	0.0000	1.454E-16	0.0000
Pb-210	5.840E-20	0.0000	1.584E-22	0.0000	0.000E+00	0.0000	1.486E-21	0.0000	1.651E-23	0.0000	1.355E-23	0.0000	8.381E-20	0.0000
Ra-226	4.145E-06	0.6097	9.893E-09	0.0015	0.000E+00	0.0000	1.062E-07	0.0156	1.233E-09	0.0002	1.364E-09	0.0002	6.799E-06	1.0000
Sr-90	1.916E-18	0.0000	1.252E-21	0.0000	0.000E+00	0.0000	5.217E-20	0.0000	5.429E-21	0.0000	2.960E-21	0.0000	2.393E-18	0.0000
Total	4.145E-06	0.6097	9.893E-09	0.0015	0.000E+00	0.0000	1.062E-07	0.0156	1.233E-09	0.0002	1.364E-09	0.0002	6.799E-06	1.0000

***CNRSI(i,p,t) includes contribution from decay daughter radionuclides

ATTACHMENT 6

RESPONSE TO COMMENTS

This page intentionally left blank.

RESPONSE TO COMMENTS
DRAFT SURVEY UNIT PROJECT REPORTS FOR SURVEY UNITS 166, 169, 170, AND 172 (WORK PACKAGE 37)
PARCEL UC3 SANITARY SEWER AND STORM DRAIN REMOVAL PROJECT
HUNTERS POINT SHIPYARD
SAN FRANCISCO, CALIFORNIA

Comments from Ryan Miya, Ph.D.
Senior Hazardous Substances Scientist
San Francisco Peninsula Team Leader
Brownfields and Environmental Restoration Program – Berkeley
Department of Toxic Substances Control

Comments Dated: April 29, 2011

SPECIFIC COMMENTS TO ALL DRAFT SUPRs	RESPONSE
Comment 1. Section 3.2.1 – Trench Survey Unit.	
(a) Please provide the dates of excavation, sampling, and backfilling at each Survey Unit.	**Response 1a.** The Navy will provide this information in Section 4.0 of the Parcel UC3 Removal Action Completion Report (RACR), which will include Trench Survey Units 166, 169, 170, and 172.
(b) The total volume of material that was remediated from each trench survey unit identified as having contamination present that exceeded the release criteria should be presented in the text.	**Response 1b.** The Navy will provide this information in Section 4.0 of the RACR.
(c) Please verify if confirmation samples from each trench survey unit were also analyzed for Chemicals of Concern (COCs) associated with corresponding IR sites (for example, IR Site 56 COCs for Survey Unit 166 confirmation samples).	**Response 1c.** The Navy conducted additional soil analyses only if the excavated soil came from an identified Installation Restoration site. If the excavated soil was not obtained from an Installation Restoration site, only radiological analyses were performed. The Navy did not analyze any of the trench unit samples for the COCs associated with IR Site 56; only radiological analyses were performed.
Comment 2. Section 3.2.2 – Excavated Soil Units/Import Fill Material. Please specify if any additional analyses on the import fill material/excavated soil units beyond the radiological analyses were conducted in order to verify the quality of the backfill.	**Response 2.** The Navy conducted additional soil analyses only if the origin of the excavated soil was from an identified Installation Restoration site. If the excavated soil was not obtained from an Installation Restoration site, only radiological analyses were performed. However, additional analyses for COCs were performed on the import fill material as specified in Section 4.2

ED_006787_00017608-01094

	of the Sampling and Analysis Plan. The Navy has provided this information in the Survey Unit Project Report Abstract, Section 3.2.6.
Comment 3. General comment. Please briefly explain why there are no pipe segment scans (e.g. majority of pipe segments disintegrated upon removal, etc.).	**Response 3.** Section 3.2 of each Survey Unit Project Report provides results of the gamma scans of the trench unit. In addition, piping and manholes that did not have enough sediment present from which to collect a sample for analysis were disposed of as low-level radioactive waste.

RESPONSE TO COMMENTS
DRAFT SURVEY UNIT PROJECT REPORTS FOR SURVEY UNITS 166, 169, 170, AND 172 (WORK PACKAGE 37)
PARCEL UC3 SANITARY SEWER AND STORM DRAIN REMOVAL PROJECT
HUNTERS POINT SHIPYARD
SAN FRANCISCO, CALIFORNIA

Comments from Larry Morgan
Senior Health Physicist
Environmental Management Branch
California Department of Public Health

Comments Dated: April 25, 2011

SPECIFIC COMMENTS TO ALL DRAFT SUPRs	RESPONSE
Comment 1. Page 1-1, Section 1.2, "Background", does not mention radionuclides of concern. Please include them.	**Response 1.** The sanitary sewer and storm drain systems are being removed due to the potential for radioactive materials to be present inside the piping and surrounding soils. The Navy has provided information concerning radionuclides of concern in the Survey Unit Project Report Abstract (SUPRA), Section 2.0. The intent of the SUPRA is to eliminate the need for repeating information applicable to all sanitary sewer and storm drain survey units.
Comment 2. Page 3-1, Section 3.2.1, Trench Survey Unit Work Package 37, states that pipe sediments were identified during the performance of gamma scans in Trench Unit 166, 169, 170 and 172. Did each Trench Unit have the pipe completely removed?	**Response 2.** The Navy removed the piping from each trench unit and disposed of the piping as low-level radioactive waste. A complete discussion of all radiological surveys performed on pipes/manholes excavated from the Survey Units 166, 169, 170, and 172 as well as any sediment sample analytical results will be provided in Section 4.0 of the RACR and summarized in Tables 3-5 and 3-6.
Comment 3. Page 3-1, Section 3.2.1, Trench Survey Unit Package 37, where was the soil removed around the pipe? Was there additional soil samples collected after the removal of the pipe?	**Response 3.** Soils removed from each trench unit were transported to a Radiological Screening Yard for screening and sampling. The Navy did not collect any soil samples until the piping was removed from each trench unit.

ED_006787_00017608-01096

FINAL SURVEY UNIT 172 PROJECT REPORT

DCN: EMAC-8823-0003-0080

May 19, 2011

NAVFAC Restoration Record Number
N00217-002857

DEPARTMENT OF THE NAVY
BASE REALIGNMENT AND CLOSURE
PROGRAM MANAGEMENT OFFICE WEST
1455 FRAZEE RD, SUITE 900
SAN DIEGO, CA 92108-4310

Ser BPMOW.CY/0608
MAY 19 2011

Mr. Mark Ripperda
U.S. Environmental Protection Agency
Region IX
75 Hawthorne Street, (SFD 8-1)
San Francisco, CA 94105-3901

Mr. Larry Morgan
California Department of Public Health
1616 Capitol Avenue, (MS 7402)
P.O. Box 997377
Sacramento, CA 95899-7377

Dear Regulatory Team Members:

Enclosed are the Final Survey Unit Project Reports (SUPRs) for Survey Units 166, 169, 170, 172, Parcel UC-3 Sanitary Sewer and Storm Drain Removal Project, Hunters Point Shipyard, San Francisco, California. Included as an attachment to the reports are responses to comments (RTCs) from the draft version. This package of enclosures is collectively known as Work Package #37. Technical review of the enclosed reports has been completed by the Navy's Radiological Affairs Support Office.

The Navy anticipates Parcel UC-3 to be the future name of the utility corridor encompassing Crisp Road and the rail line that extends off the base, which is currently part of Parcel E. Parcel UC-3 will be separated from Parcel E in the Proposed Plan. For the purpose of these SUPR reports and to avoid confusion in the upcoming UC-3 radiological Removal Action Completion Report (RACR), the parcel name "UC-3" will be used to describe this portion of Parcel E. Please see Figure 1-1 of the attached reports for location of Parcel UC-3.

The Navy is providing the enclosed reports for your review only. A regulatory free release letter is not requested at this time. As previously agreed, Final SUPR acceptance will be documented as part of regulatory acceptance of the Parcel UC-3 RACR, which is a summation of all SUPRs along Crisp Road in Parcel E. If you have questions regarding the enclosed reports, please contact Mr. Chris Yantos at (619) 532-0912, or Mr. Keith Forman at (619) 532-0913.

Sincerely,

KEITH FORMAN
BRAC Environmental Coordinator
By direction of the Director

Enclosures: (1) Final Survey Unit 166 Project Report, May 2011
(2) Final Survey Unit 169 Project Report, May 2011
(3) Final Survey Unit 170 Project Report, May 2011
(4) Final Survey Unit 172 Project Report, May 2011

Copy to:

Ms. Diane Silva (2 Hard Copies, 1 unbound, CD)
NAVFAC Southwest (Code EV33)
Naval Base San Diego
2965 Mole Rd., Bldg. 3519
San Diego, CA 92136

Ms. Laurie Lowman (3 Hard Copies and 3 CDs)
Building 1971
NWS P.O. Drawer 260
Yorktown, VA. 23691-0260

Ms. Amy Brownell (CD Only)
SF Department of Public Health
1390 Market St., Suite 210
San Francisco, Ca 94102

Ms. Elaine Warren (CD only)
Office of the City Attorney
City Hall, Room 234
1 Dr. Carlton B. Goodlett Place
San Francisco, CA 94102-4682

Ms. Leslie Lundgren (Hard Copy and CD)
33 New Montgomery Street, Suite 2000
San Francisco, CA 94105

Ms. Dorinda Shipman (Hard Copy and CD)
Treadwell and Rollo
555 Montgomery St., Suite 1300
San Francisco, CA 94111

Mr. Stephen Proud (CD Only)
Lennar/BVHP
1 California St., Suite 2700
San Francisco, CA 94111

Mr. Stan DeSouza (CD Only)
1680 Mission St., First Floor
San Francisco, CA 94103-2414

Ms. Karla Brasaemle (Hard Copy and CD)
90 New Montgomery St., Suite 710
San Francisco, CA 94105

Mr. Ryan Miya (Hard Copy and CD)
Department of Toxic Substance Control
700 Heinz Avenue, Bldg. F, Suite 200
Berkeley, CA 94710

Mr. Michael Sharpless (CD Only)
Paul Hastings, et al.
55 2nd Street, 24th Floor
San Francisco, CA 94104-2635

Ms. Tamara Davidson (CD Only)
SF Health Department
101 Grove Street, Rm 217
San Francisco, CA 94102

Ms. Janice Torbet (Hard Copy and CD)
100 Larkin Street
Gov. Information Ctr., 5th Floor
San Francisco, CA 94102

Ms. Linda Malvino (Hard Copy and CD)
Mactec Engineering and Consulting, Inc.
1465 North McDowell Blvd, Suite 200
Petaluma, CA 94954

Mr. Michael McGowan (CD only)
1331 Evans Avenue
San Francisco, CA 94124

Mr. Randy Brandt (CD Only)
1111 Broadway, 6th Floor
Oakland, CA 94607

Base Realignment and Closure
Program Management Office West
1455 Frazee Road, Suite 900
San Diego, California 92108-4310

CONTRACT NO. N62473-08-D-8823
CTO NO. 0003

FINAL

SURVEY UNIT 172 PROJECT REPORT

May 19, 2011

DCN: EMAC-8823-0003-0080

PARCEL UC3 SANITARY SEWER
AND STORM DRAIN REMOVAL PROJECT
HUNTERS POINT SHIPYARD
SAN FRANCISCO, CALIFORNIA

Base Realignment and Closure
Program Management Office West
1455 Frazee Road, Suite 900
San Diego, California 92108-4310

CONTRACT NO. N62473-08-D-8823
CTO NO. 0003

FINAL

SURVEY UNIT 172 PROJECT REPORT

May 19, 2011

PARCEL UC3 SANITARY SEWER AND STORM DRAIN REMOVAL PROJECT HUNTERS POINT SHIPYARD SAN FRANCISCO, CALIFORNIA

DCN: EMAC-8823-0003-0080

Prepared by:

TETRA TECH EC, INC.
1230 Columbia Street, Suite 750
San Diego, California 92101-8536

Daryl DeLong
Technical Lead

Erik Abkemeier, CHP, PE, CSP, CHMM
Radiation Safety Officer

Kent Weingardt
Project Manager

TABLE OF CONTENTS

PAGE

ABBREVIATIONS AND ACRONYMS iii

1.0 INTRODUCTION 1-1
1.1 PURPOSE 1-1
1.2 BACKGROUND 1-1

2.0 RELEASE CRITERIA 2-1

3.0 FINAL STATUS SURVEYS 3-1
3.1 OBJECTIVE OF THE FINAL STATUS SURVEY 3-1
3.2 SURVEY UNIT 3-1
3.2.1 Trench Survey Unit 3-1
3.2.2 Import Fill Material 3-3
3.3 REFERENCE AREA 3-3

4.0 LABORATORY ANALYSIS 4-1

5.0 STATISTICAL TESTS 5-1

6.0 DOSE MODELING 6-1
6.1 MODELING INPUT PARAMETERS USING LARGER OF MDL OR REPORTED ACTIVITY 6-1
6.2 DOSE AND RISK MODELING RESULTS 6-2

7.0 RECOMMENDATION OF FINAL UNRESTRICTED RELEASE 7-1
7.1 DERIVED CONCENTRATION GUIDELINES 7-1
7.2 DCGL MODELING 7-1
7.3 AS LOW AS REASONABLY ACHIEVABLE 7-1
7.4 ENVIRONMENTAL ALARA PROCESS 7-1
7.4.1 Identification of Potential Radiological Impacts 7-2
7.4.2 Review of Radiological Impacts 7-2
7.4.3 Performance of Qualitative ALARA Analyses 7-2
7.4.4 Performance of Quantitative ALARA Analyses 7-3
7.5 ALARA ANALYSIS RESULTS 7-4
7.6 RECOMMENDATIONS 7-4

8.0 REFERENCES 8-1

TABLE OF CONTENTS
(Continued)

PAGE

TABLES

Table 3-1 Class 1 Soil Measurements – Trench Unit 172 3-2

Table 4-1 Survey Unit 172 Laboratory Results Comparison (pCi/g) 4-2

Table 6-1 Modeling Parameters Using Larger of MDL or Reported Activity Concentrations 6-1

Table 6-2 Dose and Risk Modeling Summary 6-2

FIGURES

Figure 1-1 Parcel UC3 Survey Unit Key Plan

Figure 3-1 Parcel UC3 Survey Unit 172, Area 16

ATTACHMENTS

Attachment 1 Trench Unit 172 Radiation/Contamination Survey Form (on CD only)

Attachment 2 Laboratory Analysis Reports for Trench Unit 172 (on CD only)

Attachment 3 Quality Assurance Sample Results (on CD only)

Attachment 4 Backfill Material RESRAD Report (on CD only)

Attachment 5 Trench Unit RESRAD Report (on CD only)

Attachment 6 Response to Comments

ABBREVIATIONS AND ACRONYMS

ALARA	as low as reasonably achievable
AM	Action Memorandum
^{214}Bi	bismuth-214
^{137}Cs	cesium-137
DCGL	derived concentration guideline level
EPA	U.S. Environmental Protection Agency
FSS	Final Status Survey
HPS	Hunters Point Shipyard
IR	Installation Restoration (Program)
keV	kiloelectron volt
MDA	minimum detectable activity
MDL	method detection limit
mrem/y	millirems per year
pCi/g	picocuries per gram
^{226}Ra	radium-226
RASO	Radiological Affairs Support Office
ROC	radionuclide of concern
^{90}Sr	strontium-90
SUPR	Survey Unit Project Report
VSP	Visual Sample Plan

This page intentionally left blank.

1.0 INTRODUCTION

1.1 PURPOSE

This Survey Unit Project Report (SUPR) documents the work performed in Survey Unit 172 (inclusive of the trench and the associated import fill material used as backfill). The work was conducted under the final Base-wide Storm Drain and Sanitary Sewer Removal Work Plan, Revision 4 (TtEC 2010a). This SUPR summarizes the scope, approach, and radiological surveys resulting from the removal of the sanitary sewer and storm drains located within Area 16 in Parcel UC3 at Hunters Point Shipyard (HPS), San Francisco, California.

Information that was provided in the SUPRs Abstract (TtEC 2010b) will be repeated only if there were exceptions to the information specific to Survey Unit 172.

1.2 BACKGROUND

Survey Unit 172 is the net sum of Trench Unit 172 and a volume of import fill material, which was used for backfill. There are five trench segments associated with Trench Unit 172. None of the trench segments are located in Installation Restoration (IR) sites.

Survey Unit 172 is located in Parcel UC3 within Area 16 as identified on Figure 1-1. Trench Unit 172 is located on Crisp Road, between Buildings 820 and 831. The footprint of Trench Unit 172 was 313 linear feet in length (95.4 meters). The total surface area was approximately 3,379.87 square feet (314 square meters) of actual excavated trench, in varying depths up to 4 feet below ground surface.

This page intentionally left blank.

2.0 RELEASE CRITERIA

Release criteria information for Survey Unit 172 is presented in Section 2.0 of the SUPRs Abstract (TtEC 2010b). No additional radionuclides of concern (ROCs) were identified.

This page intentionally left blank.

3.0 FINAL STATUS SURVEYS

3.1 OBJECTIVE OF THE FINAL STATUS SURVEY

The objective of the Final Status Survey (FSS) was to demonstrate that identified residual radioactivity levels inside the excavated trench and within the import fill material used as backfill met the release criteria.

3.2 SURVEY UNIT

Survey Unit 172 is located within Area 16 and consists of only a trench unit. There are five trench segments associated with Trench Unit 172. None of the trench segments are located in IR sites.

3.2.1 Trench Survey Unit

Scan surveys and systematic sampling were performed in Trench Unit 172. Figure 3-1 shows the approximate systematic sampling locations, and provides the lengths of piping segments and locally assigned identification for each trench segment. Trench Unit 172 had a total surface area of 314 square meters. Systematic postexcavation samples were collected after a grid was established using Visual Sample Plan (VSP).

No measurements above the investigation level were identified during the performance of gamma scans in Trench Unit 172. Therefore, no additional surveys or sampling were performed. The trench unit gamma scan ranges, investigation level, and static measurement values are provided in Attachment 1.

VSP was used to generate 18 systematic sample locations based on a random start point and a triangular grid. None of the samples identified activity above the release criteria for any ROC. A summary of the 18 systematic sample results is provided in Table 3-1.

The cesium-137 (^{137}Cs) results show 6 of the 18 values less than the reported minimum detectable activity (MDA) and had flags identified that will require the values to be considered less than the MDA. In addition, one of the samples that identified ^{137}Cs activity greater than the reported MDA had a flag associated with the activity that will require the value to be considered less than the MDA. However, the reported activity will be utilized for dose modeling purposes.

The radium-226 (^{226}Ra) results show all 18 values less than the MDA or had flags identified that require the values to be considered less than the reported MDA.

TABLE 3-1

Class 1 Soil Measurements - Trench Unit 172

Sample No.	Date	Time	^{137}Cs	Flag	MDA	≥MDA	^{90}Sr	Flag	MDA	≥MDA	^{226}Ra	Flag	MDA	≥MDA
			Results (pCi/g)											
1	6/21/2010	13:10:00	0.036		0.022	0.036					0.513	A	0.901	0.901
2	6/21/2010	13:15:00	0.016	A	0.031	0.031					0.546	A	0.665	0.665
3	6/21/2010	13:20:00	0.045	#	0.024	0.045					0.065	A	1.030	1.030
4	6/21/2010	13:25:00	0.030		0.027	0.030					0.091	A	0.904	0.904
5	6/21/2010	13:30:00	0.036		0.025	0.036					0.396	A	0.536	0.536
6	6/21/2010	13:35:00	0.004	A	0.033	0.033					0.191	A	0.796	0.796
7	6/21/2010	13:40:00	0.030		0.028	0.030					0.215	A	0.638	0.638
8	6/21/2010	13:45:00	0.074		0.030	0.074	0.186	U	0.162	0.162	0.448	A	0.844	0.844
9	6/21/2010	13:50:00	0.077		0.033	0.077	0.049	U	0.260	0.260	0.030	A	0.938	0.938
10	6/21/2010	13:55:00	0.080		0.034	0.080					0.275	A	0.802	0.802
11	6/21/2010	14:00:00	0.047		0.035	0.047					0.050	A	0.963	0.963
12	6/21/2010	14:05:00	0.017	A	0.023	0.023					-0.141	#A	0.744	0.744
13	6/21/2010	14:10:00	0.003	A	0.045	0.045					0.618	A	0.733	0.733
14	6/21/2010	14:15:00	0.018	A	0.021	0.021					-0.311	#A	0.220	0.220
15	6/21/2010	14:20:00	0.088		0.022	0.088					0.499	A	0.623	0.623
16	6/21/2010	14:25:00	0.015	A	0.022	0.022					0.115	A	0.710	0.710
17	6/21/2010	14:30:00	0.054		0.032	0.054					0.692	A	0.864	0.864
18	6/21/2010	14:35:00	0.033		0.022	0.033					-0.112	#A	0.980	0.980
		mean				**0.045**				**0.211**				**0.772**
		std dev				**0.021**				**0.069**				**0.194**
		median				**0.036**				**0.211**				**0.799**

Notes:
Information concerning flags associated with the on-site laboratory data can be found in Section 4.3 and a discussion of uncertainty can be found in Section 4.8 of the SUPRs Abstract (TtEC 2010b).

Abbreviations and Acronyms:
^{137}Cs – cesium-137
MDA – minimum detectable activity
pCi/g – picocuries per gram
^{226}Ra – radium-226
^{90}Sr – strontium-90
std dev – standard deviation
SUPR – Survey Unit Project Report

The "#" flag indicates that "All peaks for activity calculation had bad shape." The "A" flag indicates "Activity is reported but the activity is <MDA." These flag indications are printed on the on-site laboratory reports in Attachment 2. Section 4.3 of the SUPRs Abstract (TtEC 2010b) also discusses these flags in more detail. For the "#" flag, the SUPRs Abstract (TtEC 2010b) indicates that the peak did not have a proper Poisson shape and that these peaks are suspect. For the "A" flag, the SUPRs Abstract (TtEC 2010b) specifies that the activity calculation performed on the peaks for the ROC yields a lower value than the calculation for the MDA. This identifies that a calculation was performed and the peaks were found, but the resulting activity was lower than the MDA.

ED_006787_00017608-01111

Table 3-1 also contains a summary of the analytical results for radionuclides analyzed by methods other than gamma spectroscopy. The strontium-90 (^{90}Sr) results indicate that both samples were identified to be less than the MDA, as designated by the "U" qualifier flag.

Summary statistics (standard deviation, median, and the mean activity greater than or equal to the MDA) are calculated and reported at the bottom of Table 3-1 for all radioanalytical results.

Complete laboratory analytical reports for each Trench Unit 172 soil sample, including duplicate samples, are presented in Attachment 2.

3.2.2 Import Fill Material

Approximately 161 cubic yards of import fill material was required to complete backfilling activities. Import fill sample information for Survey Unit 172 is presented in Section 3.2.6 of the SUPRs Abstract (TtEC 2010b).

3.3 REFERENCE AREA

Reference area sample information for Survey Unit 172 is presented in Section 3.3 of the SUPRs Abstract (TtEC 2010b).

This page intentionally left blank.

4.0 LABORATORY ANALYSIS

Information concerning laboratory analysis is presented in Section 4.0 of the SUPRs Abstract (TtEC 2010b). Specifically, information concerning flags associated with the on-site laboratory data can be found in Section 4.3 and a discussion of uncertainty can be found in Section 4.8 of the SUPRs Abstract (TtEC 2010b). The average count time for the off-site laboratory was 30 minutes, while the average count time for the on-site laboratory was 67.5 minutes. The MDAs and method detection limits (MDLs) for both the on-site and off-site laboratory were well below the release criteria for any ROCs. Off-site laboratory MDLs averaged 0.028 picocurie per gram (pCi/g) for ^{137}Cs and 0.091 pCi/g for ^{226}Ra, while on-site laboratory MDAs averaged 0.028 pCi/g for ^{137}Cs and 0.713 pCi/g for ^{226}Ra.

Results of the HPS and off-site laboratory data were reviewed to ensure that the activities for all ROCs were below the release criteria. These data were then evaluated by the Laboratory Manager. The on-site laboratory analyzed the samples directly for ^{226}Ra using the U.S. Environmental Protection Agency (EPA) 901.1 MOD method and calculating the ^{226}Ra activity from the 3.6 percent abundant 186.2 kiloelectron-volt (keV) gamma spectrum line for ^{226}Ra. The off-site laboratory counted the samples using the EPA 901.1 MOD method, and the ^{226}Ra results were calculated and reported from the 46.09 percent abundant 609.31 keV gamma spectrum line of bismuth-214 (^{214}Bi) after an in-growth period of greater than 21 days to allow the ^{214}Bi to approach secular equilibrium with ^{226}Ra.

To perform a detailed comparison, sample results were placed into a spreadsheet so that data could be compared directly to each laboratory. The review consisted of identifying sample results that reported activity above the MDA/MDL for any ROC. Once identified, the next step was to determine if either laboratory reported results above the MDA/MDL for the same samples. The on-site laboratory reported ^{137}Cs activity above the MDA for both samples while the off-site laboratory did not report activity above the MDL for any sample. Therefore, no direct comparison was made.

Neither laboratory reported ^{226}Ra activity above the MDA/MDL for any sample. As a result, no direct comparison could be made. Since the off-site laboratory did not report the daughter isotopes of ^{226}Ra (^{214}Bi and lead-214) above the MDL for either of the samples, no additional comparison was made.

Table 4-1 presents a summary comparison of the on-site and off-site laboratory sample results. On-site laboratory sample results are provided in Attachment 2; quality assurance sample results from the off-site laboratory are provided in Attachment 3.

TABLE 4-1

SURVEY UNIT 172 LABORATORY RESULTS COMPARISON (pCi/g)

Sample ID	On-site Laboratory							Off-site Laboratory (QA)						
	Count Time (min)	^{137}Cs			^{226}Ra			Count Time (min)	^{137}Cs			^{226}Ra		
		Activity	MDA	2σ Error	Activity	MDA	2σ Error		Activity	MDL	2σ Error	Activity	MDL	2σ Error
03-PET-172-10	45	0.080	0.034	0.051	0.275	0.802	0.964	30	0.004	0.031	0.038	-0.066	0.085	1.170
03-PET-172-15	90	0.088	0.022	0.035	0.499	0.623	0.761	30	0.011	0.025	0.034	-0.045	0.097	1.810

Sample ID	On-site Laboratory							Off-site Laboratory (QA)						
	Count Time (min)	^{214}Bi			^{214}Pb			Count Time (min)	^{214}Bi			^{214}Pb		
		Activity	MDA	2σ Error	Activity	MDA	2σ Error		Activity	MDL	2σ Error	Activity	MDL	2σ Error
03-PET-172-10	45	0.418	0.062	0.143	0.319	0.060	0.136	30	-0.066	0.085	1.170	-0.002	0.063	0.068
03-PET-172-15	90	0.409	0.045	0.105	0.331	0.059	0.117	30	-0.045	0.097	1.810	0.010	0.076	0.086

Notes:
Information concerning flags associated with the on-site laboratory data can be found in Section 4.3 and a discussion of uncertainty can be found in Section 4.8 of the SUPRs Abstract (TtEC 2010b).

Abbreviations and Acronyms:
^{214}Bi – bismuth-214
^{137}Cs – cesium-137
MDA – minimum detectable activity
MDL – method detection limit
min – minute
^{214}Pb – lead-214
pCi/g – picocuries per gram
QA – quality assurance
^{226}Ra – radium-226
SUPR – Survey Unit Project Report

ED_006787_00017608-01115

5.0 STATISTICAL TESTS

Because the majority of the data in Table 3-1 were interpreted to be less than the MDA and all sample results were less than the release criteria for the ROCs, there was no basis for performing statistical tests for Survey Unit 172.

This page intentionally left blank.

6.0 DOSE MODELING

6.1 MODELING INPUT PARAMETERS USING LARGER OF MDL OR REPORTED ACTIVITY

Table 6-1 shows the mean concentrations of ^{137}Cs, ^{226}Ra, and ^{90}Sr from using the actual activity and replacing it with the MDL value if the reported activity was less than the MDL. The activity used to model each radionuclide is based on the isotopic net concentration.

TABLE 6-1

MODELING PARAMETERS USING LARGER OF MDL OR REPORTED ACTIVITY CONCENTRATIONS

Survey Unit 172	Residual Activity ≥ MDL (pCi/g)			Volume of Material (yd^3)	Percent of Fill	Weighted Sum (pCi/g) (Backfill)		
	^{137}Cs	^{90}Sr	^{226}Ra			^{137}Cs	^{90}Sr	^{226}Ra
Import Fill	0.053	0.070	1.094	161	100.00%	0.053	0.070	1.094
Backfill Material Average Activity	0.053	0.070	1.094	Weighted Sum Activity		0.053	0.070	1.094
Trench Unit Average Activity	0.045	0.211	0.772	Backfill Net Activity		0.053	0.070	0.373
Reference Area Average Activity	0.040	0.194	0.721	Trench Unit Net Activity		0.045	0.211	0.051

Abbreviations and Acronyms:
^{137}Cs – cesium-137
MDL – method detection limit
pCi/g – picocuries per gram
^{226}Ra – radium-226
^{90}Sr – strontium-90
yd^3 – cubic yard

Using the data provided in Table 6-1, the average net concentrations of residual radioactivity of material used as backfill in Survey Unit 172 were 0.053 pCi/g for ^{137}Cs, 0.070 pCi/g for ^{90}Sr, and 0.373 pCi/g for ^{226}Ra. The trench unit average net concentrations of residual radioactivity were 0.045 pCi/g for ^{137}Cs, 0.211 pCi/g for ^{90}Sr, and 0.051 pCi/g for ^{226}Ra.

ED_006787_00017608-01118

6.2 DOSE AND RISK MODELING RESULTS

Modeling resulted in a net residual dose of 3.643 millirems per year (mrem/y) with an increased cancer risk of 6.631×10^{-5} for the backfill material and 0.8232 mrem/y with an increased cancer risk of 1.343×10^{-5} for the trench unit.

These results are summarized in Table 6-2. Based on these results, no further dose modeling is determined to be reasonable or prudent. The RESRAD reports can be found in Attachments 4 and 5.

TABLE 6-2

DOSE AND RISK MODELING SUMMARY

Dose and Risk Modeling Summary - Trench Unit 172										
Survey Unit	Modeling Parameter	Survey Area	Average Activity (pCi/g)			Net Activity (pCi/g)			Dose (mrem/y)	Cancer Risk
			^{137}Cs	^{90}Sr	^{226}Ra	^{137}Cs	^{90}Sr	^{226}Ra		
Backfill	Activity ≥ MDA	161 cy	0.053	0.070	1.094	0.053	0.070	0.373	3.643	6.631E-05
Trench Unit	Activity ≥ MDA	314 m^2	0.045	0.211	0.772	0.045	0.211	0.051	0.8232	1.343E-05

Abbreviations and Acronyms:
^{137}Cs – cesium-137
cy – cubic yard
m^2 – square meter
MDA – minimum detectable activity
mrem/y – millirems per year
pCi/g – picocuries per gram
^{226}Ra – radium-226
^{90}Sr – strontium-90

ED_006787_00017608-01119

7.0 RECOMMENDATION OF FINAL UNRESTRICTED RELEASE

7.1 DERIVED CONCENTRATION GUIDELINES

The radionuclide-specific release criteria, referred to as derived concentration guideline levels (DCGLs), used for the FSS are equivalent to the ROC release criteria established in the final Base-wide Radiological Removal Action, Action Memorandum – Revision 2006 (AM) (DON 2006). The DCGLs are presented in terms of mass activity concentrations and refer to average levels of radiation or radioactivity above background levels.

7.2 DCGL MODELING

DCGLs were obtained from the AM and were then modeled using RESRAD Version 6.3, based on the 25 mrem/y total effective dose equivalent or were otherwise risk-based; the final doses are all less than the 25 mrem/y release criterion for HPS. The model for the critical group was based on default RESRAD Version 6.5 parameters. This model shows that with all the DCGLs combined (the ROCs), the dose to the average member of the critical group for this trench unit would be 9.898 mrem/y.

7.3 AS LOW AS REASONABLY ACHIEVABLE

As low as reasonably achievable (ALARA) is a philosophy of striving for excellence in the practice of health physics and is an important aspect of radiation-safety regulations. The National Council on Radiation Protection and Measurements has stated "ALARA is simply the continuation of good radiation-protection programs and practices which traditionally have been effective in keeping the average and individual exposures for monitored workers well below the limits" (NCRP 1993). The application of ALARA clearly includes the consideration of economic and social factors, and thus will inherently be different for different sources or facilities.

The ALARA concept is founded on the professional judgment of radiation-safety managers and personnel and is not, therefore, able to be used as a measure as to whether or not a particular radiation-safety program is adequate in comparison with other programs. Additionally, the ALARA concept does not provide a numerical limit below which the ALARA concept is achieved.

7.4 ENVIRONMENTAL ALARA PROCESS

This section describes the steps taken to implement the environmental ALARA policy:

- Identification of Potential Radiological Impacts
- Review of Radiological Impacts

ED_006787_00017608-01120

- Performance of Qualitative ALARA Analyses
- Performance of Quantitative ALARA Analyses

7.4.1 Identification of Potential Radiological Impacts

Each new radiological operation was subjected to ALARA reviews before work began to ensure that radiation exposures to workers, the public, and the environment met ALARA principles. ALARA reviews were conducted for all operations, practices, and procedures that have potential for individual or collective doses to workers. Reviews culminated in changes or additions to work planning documents, standard operating procedures, and radiological work permits.

These documents were used to identify activities that have potential for radiological environmental impacts and could require environmental ALARA analysis. If a radiological impact was identified that could impact the environment significantly, the Radiation Safety Officer communicated the impact to the work staff and the Radiological Affairs Support Office (RASO).

7.4.2 Review of Radiological Impacts

Radiological impacts to the environment, workers, and public from field operations were assessed for compliance with ALARA principles. Results from radiological survey activities, and air, soil, sediment, and water samples were used to assess the radiological impacts of HPS activities.

Environmental radiological impacts from radiological activities were determined using nine methods: 1) air monitoring stations located around the excavation site perimeter to track radiological impacts; several air-sampling devices monitor radionuclides in the ambient air, and the results of this monitoring are provided to the RASO on a monthly basis; 2) field monitoring and sampling to identify areas requiring additional remediation; 3) remediation of contaminated areas at or above the release criteria; 4) control of radiologically impacted areas and work sites; 5) frisking of personnel and examining equipment leaving a radiologically controlled area; 6) use of release criteria that equate to dose and risk; 7) review of historical radiological operations to allow complete investigation of all areas of radiological concern; 8) characterization of radiologically impacted sites to ensure complete removal of radioactive material above the release criteria; and 9) dosimetry worn by personnel to measure time-averaged doses from gamma radiation.

7.4.3 Performance of Qualitative ALARA Analyses

Laboratory analyses are performed for 19 different isotopes to ensure that any possible radioactive contamination has been identified. After each excavation has been completed, assessment of the qualitative radiological impacts from operations is done by performing a dose

and risk assessment. The results of analysis and assessments are provided to the RASO and regulatory agencies for review.

7.4.4 Performance of Quantitative ALARA Analyses

Based on qualitative ALARA analyses, excavation projects that could cause the potential dose to the public to exceed 1 millirem (individual) or 10 person-rem (collective) are subjected to quantitative ALARA analyses using the steps described below. To date, no operations at HPS have resulted in an individual dose to the public greater than 1 mrem or a collective dose greater than 10 person-rem.

Quantitative ALARA analyses include societal, technological, economic, and public policy considerations. In addition, these ALARA analyses consider Nuclear Regulatory Commission guidance for performing the following environmental ALARA assessments:

- Identification of possible radiation protection systems, such as alternative operating methods or controls, that are reasonably achievable. The options range from the most rudimentary (base case) to the most technologically sophisticated systems.
- Quantification of exposures and doses to workers and the public in the vicinity of the work through air monitoring and dosimetry.
- Quantification of the economic factors, including the costs of purchasing, installing, operating, and maintaining the radiological equipment, and the potential health effects associated with the exposure of people and any other direct or indirect cost resulting from exposures to radiation during investigations and/or remediations.
- Identification and estimation of other health and nonhealth detriments and benefits, such as equipment loss and accidents.
- Evaluation of process alternatives using a quantitative cost-benefit analysis, when possible. When evaluations included assumptions, judgments, and limitations that could be quantified, and potential doses were well below the dose limit, qualitative analyses were used with full documentation.
- Implementation of the ALARA principles and monitoring of the results.

The following specific factors were used in performing a quantitative ALARA analysis:

- Dose to workers, the public, and the environment before and during work processes
- Residual dose to the local population
- Applicable alternative processes (treatments, operating methods, or controls) for site investigations or remediations
- Costs for each alternative evaluated
- Societal and environmental (positive and negative) impacts associated with alternatives

ED_006787_00017608-01122

7.5 ALARA ANALYSIS RESULTS

Based on recent estimates of dose to the public from HPS operations, only qualitative ALARA analyses were required. Much of the data and analyses used for environmental ALARA evaluations were developed as part of the routine work processes.

Qualitative ALARA analyses resulted in no gamma measurements above the investigation levels; none of the sample results identified activity above the release criteria for any ROC; no air sampling results were above 10 percent of the derived air concentration; and no personnel dosimetry badges processed identified gamma dose above background levels.

7.6 RECOMMENDATIONS

Dose modeling using RESRAD determined that the potential dose of Survey Unit 172 due to activity concentrations greater than or equal to the MDL or the MDA has been determined to be 3.643 mrem/y with an increased cancer risk of 6.631×10^{-5} as shown in Table 6-2. These results are less than the EPA criteria of 15 mrem/y with an increased cancer risk of less than 3×10^{-4}, which supports free release. Therefore, no further action is recommended for Survey Unit 172.

8.0 REFERENCES

DON (Department of the Navy). 2006. Final Base-wide Radiological Removal Action, Action Memorandum – Revision 2006, Hunters Point Shipyard, San Francisco, California.

NCRP (National Council on Radiation Protection and Measurements). 1993. The National Council on Radiation Protection and Measurements, Report Number 116.

TtEC (Tetra Tech EC, Inc.). 2010a. Final Project Work Plan, Revision 4. Base-wide Storm Drain and Sanitary Sewer Removal, Hunters Point Shipyard, San Francisco, California. July 30.

——————. 2010b. Final Survey Unit Project Reports Abstract, Revision 2. January 27.

This page intentionally left blank.

FIGURES

This page intentionally left blank.

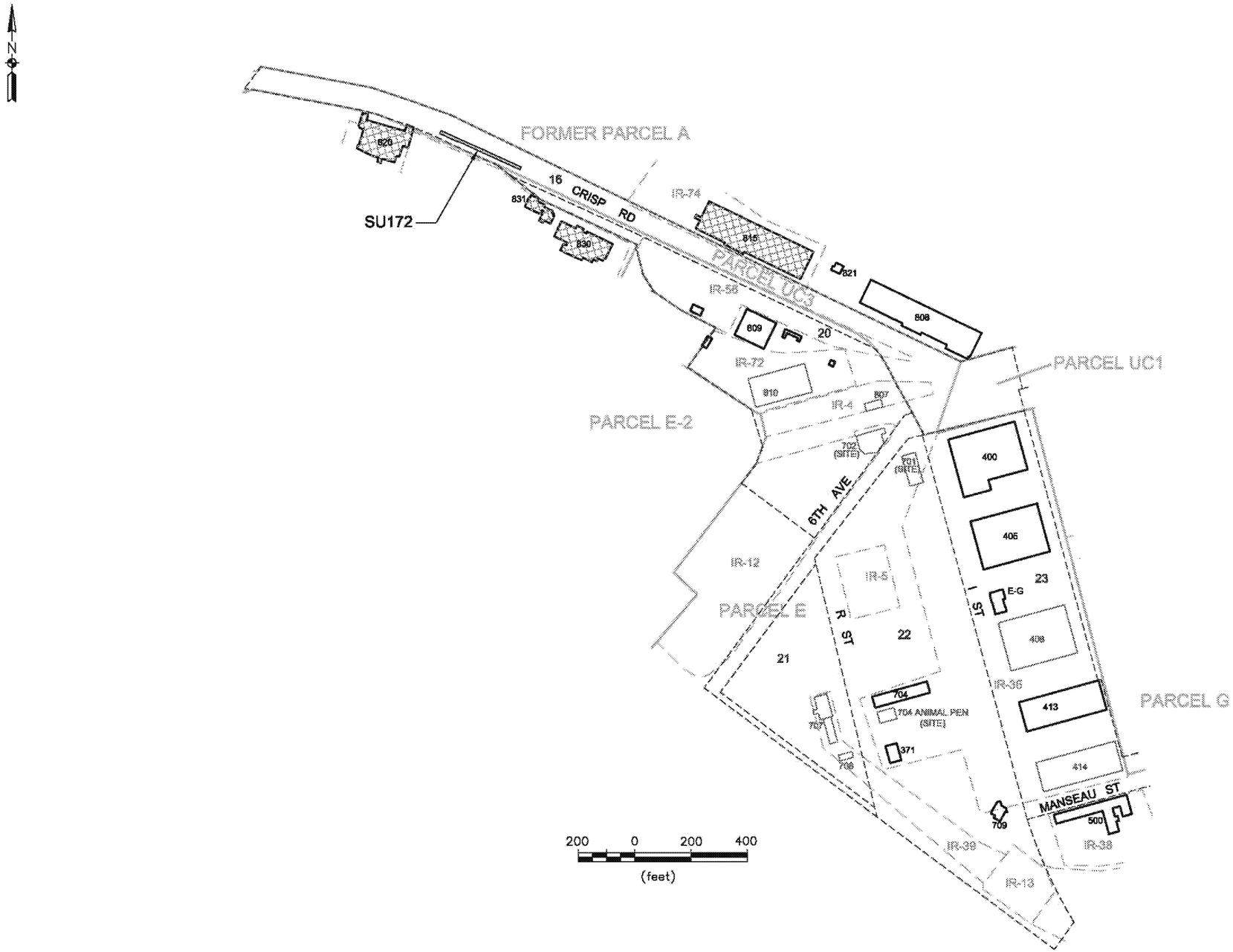

LEGEND

- SURVEY UNIT (SU)
- WORK AREA BOUNDARY
- IR BOUNDARY
- PARCEL BOUNDARY
- 140 – IMPACTED BUILDING BUILDING NUMBER
- 142 (SITE) – IMPACTED BUILDING FORMER BUILDING LOCATION
- 128 – NON–IMPACTED BUILDING BUILDING NUMBER
- 820 – IMPACTED FUD SITE (FORMERLY USED DEFENSE SITE) BUILDING NUMBER

BASE REALIGNMENT AND CLOSURE
PROGRAM MANAGEMENT OFFICE WEST
SAN DIEGO, CALIFORNIA

SURVEY UNIT 172 PROJECT REPORT

FIGURE 1-1

PARCEL UC3 SURVEY UNIT KEY PLAN

HUNTERS POINT SHIPYARD, SAN FRANCISCO, CA

REVISION: A
AUTHOR: K. TODD
PROJECT NO: 106–3670
FILE: SEE BELOW

TETRA TECH EC, INC.

J:\CAD Dept\HUNTERS POINT\CTO 03-FIGURES\Figure 1-1 and 3-1\Final\Package 37\SU172_FIGURE 1-1_03-18-11.dwg

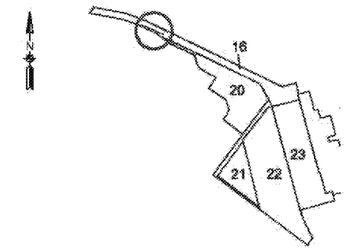

KEY PLAN

LEGEND

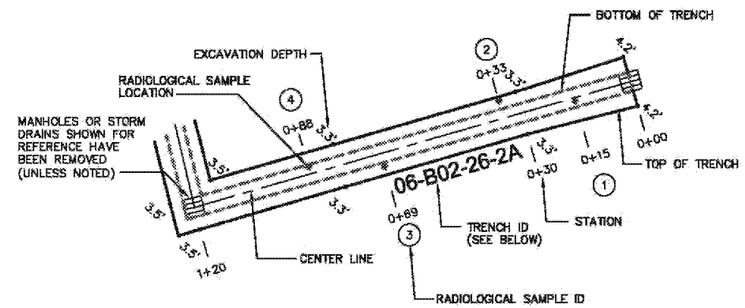

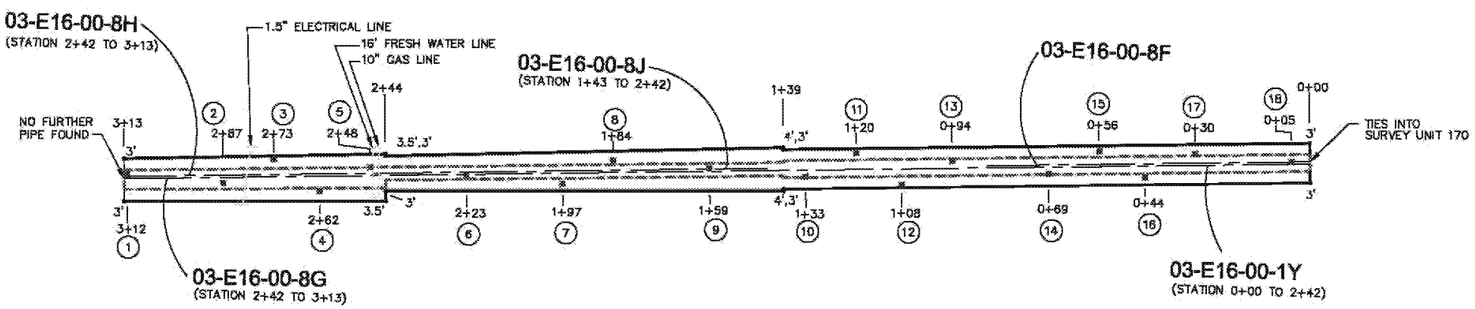

20 0 20 40
(feet)

TRENCH ID

XX-XXX-XX-XX

- SEGMENT NO.
- IR SITE ID, 00 IF NON-IR SITE
- WORK/BLDG AREA
- CTO OR TO NUMBER

IR BOUNDARY
PARCEL BOUNDARY
WORK AREA BOUNDARY
EP EXTRANEOUS PIPE
140 BUILDING
CONCRETE
ROCK

SURVEY UNIT AREA = 314 SQUARE METERS
TOTAL LENGTH OF TRENCH = 313 LINEAR FEET

BASE REALIGNMENT AND CLOSURE
PROGRAM MANAGEMENT OFFICE WEST
SAN DIEGO, CALIFORNIA

SURVEY UNIT 172 PROJECT REPORT

FIGURE 3-1

PARCEL UC3 SURVEY UNIT 172, AREA 16

HUNTERS POINT SHIPYARD, SAN FRANCISCO, CA

REVISION: A
AUTHOR: K. TODD
PROJECT NO: 106-3670
FILE: SEE BELOW

TETRA TECH EC, INC.

J:\CAD Dept\HUNTERS POINT\CTO 03-FIGURES\Figure 1-1 and 3-1\Final\Package 37\SU172_FIGURE 3-1_03-18-11.dwg 3/18/11

ATTACHMENT 1

TRENCH UNIT 172
RADIATION/CONTAMINATION SURVEY FORM
(on CD only)

This page intentionally left blank.

RADIATION/CONTAMINATION SURVEY SUPPLEMENT

Date: 6/21/2010	Time: 08:30	INSTRUMENTATION USED						
		Model Inst/Det.	Serial Number	Calibration Due Date	Instrument % Efficiency	Total % Efficiency	MDC/MDA + (dpm/100cm2)	Background + (dpm/100cm2)
Survey Number: HPS-SU-172								
Location: Parcel E-1								
Surveyor: C. Bell								
Reviewed By: (Print & Sign)		2350-1 44-10	126170 169520	11/3/2010				

Isotopes of Concern: ^{226}Ra ^{90}Sr ^{137}Cs

Description of drawing: Trench Scan Survey

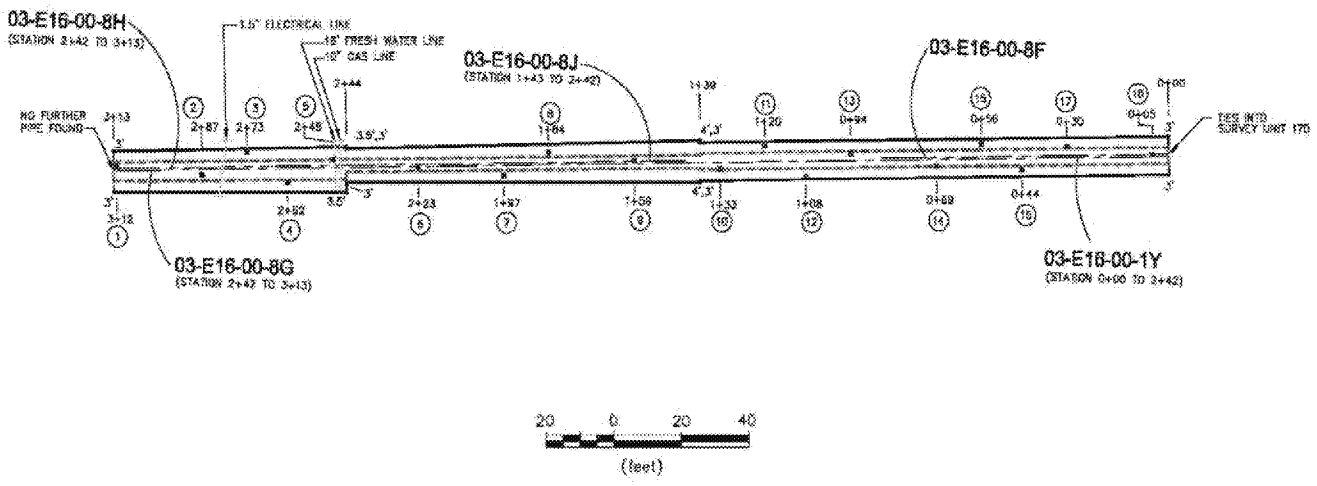

Comments:

Scan range for 2350-1 Instrument is 3.76 - 6.51 Kcpm

3 sigma investigation level for 2350-1 Instrument is 6712 cpm

Picture is representative of material surveyed.

denotes swipe location or fixed α/β readings

# denotes G/A radiation readings

#/# denotes contact / 1 meter radiation readings.

* denotes highest radiation reading on contact

LAW denotes large area masslinn wipe

Δ denotes static location.

\+ Unless Otherwise Noted

All readings in μR/hr unless otherwise noted

K = 1000

RADIATION/CONTAMINATION SURVEY SUPPLEMENT

SURVEY NUMBER: HPS-SU-172								
SURVEYOR: C. Bell					LOCATION: Parcel E-1			
Location	Exposure Rate (µR/hr)		Fixed + Removable (NET)			Removable (NET)		Comments
	Contact	1 Meter	Gamma (cpm)	Alpha dpm/100cm2	Beta/Gamma dpm/100cm2	Alpha dpm/100cm2	Beta/Gamma dpm/100cm2	
1			5266					
2			4937					
3			4853					
4			5914					
5			5754					
6			6192					
7			5878					
8			5789					
9			5113					
10			5561					
11			5369					
12			4725					
13			5831					
14			6255					
15			5965					
16			5737					
17			4931					
18			5369					
Reviewer:							Date:	

ATTACHMENT 2

LABORATORY ANALYSIS REPORTS FOR TRENCH UNIT 172 (on CD only)

This page intentionally left blank.

ORTEC g v - i (3263) Npp32 G53W3.10 21-JUN-2010 16:53:54
New World Technology Spectrum name: 3N000553.An1

Sample description
Parcel E 03-PET-172-01 356g
6/21/10 13:10

Acquisition information
Start time: 21-Jun-2010 16:05:47
Live time: 2700
Real time: 2702

- -

***** S U M M A R Y O F N U C L I D E S I N S A M P L E *****

Nuclide		Time of Count Activity pCi/g	Uncertainty Counting pCi/g	2 Sigma Total pCi/g	MDA pCi/g
Ac-228		2.3988E-01	1.5991E-01	1.6077E-01	0.131E+00
AM-241	#A	-4.5332E-03	8.0313E-02	8.0313E-02	0.820E-02
Bi-212	A	-4.9565E-02	1.1434E-01	1.1439E-01	0.215E+00
BI-214		2.0393E-01	1.0129E-01	1.0219E-01	0.498E-01
CO-60	#A	-3.1971E-02	1.0549E-01	1.0551E-01	0.333E-01
CS-137		3.6305E-02	3.2567E-02	3.2658E-02	0.221E-01
EU-152	#A	-1.9620E-01	4.3844E-01	4.3875E-01	0.134E+00
EU-154	C	1.0756E-01	8.0279E-02	8.0795E-02	0.682E-01
K-40	#	3.7386E+00	9.7328E-01	1.0074E+00	0.346E+00
Pa-234		1.1836E-01	1.4881E-01	1.4917E-01	0.102E+00
Pb-210	A	4.3665E-01	9.6656E-01	9.6717E-01	0.717E+00
Pb-212	A	6.3709E-02	9.5834E-02	9.5957E-02	0.642E-01
PB-214		2.0381E-01	1.4308E-01	1.4383E-01	0.614E-01
RA-226	A	5.1312E-01	1.0937E+00	1.0943E+00	0.901E+00
Th-230	#A	-1.1243E+01	8.0915E+01	8.0937E+01	0.584E+01
Th-234	A	2.7306E-01	1.8194E+00	1.8196E+00	0.132E+01
Tl-208	A	2.2032E-02	1.9034E-02	1.9445E-02	0.640E-01
U-235	A	-1.7939E-02	5.4093E-02	5.4110E-02	0.622E-01

- All peaks for activity calculation had bad shape.
* - Activity omitted from total
& - Activity omitted from total and all peaks had bad shape.
< - MDA value printed.
A - Activity printed, but activity < MDA.
B - Activity < MDA and failed test.
C - Area < Critical level.
F - Failed fraction or key line test.
H - Halflife limit exceeded

---------- S U M M A R Y ----------

Total Activity (34.9 to 2779.2 keV) 4.423E+00 pCi/g

Laboratory: New World Technology

ORTEC g v - i (3263) Npp32 G53W3.10 21-JUN-2010 19:35:46
New World Technology Spectrum name: 7N000391.An1

Sample description
Parcel E 03-PET-172-02 326g
6/21/10 13:15

Acquisition information
Start time: 21-Jun-2010 17:55:00
Live time: 5400
Real time: 5406

- -

***** S U M M A R Y O F N U C L I D E S I N S A M P L E *****

Nuclide		Time of Count Activity pCi/g	Uncertainty 2 Sigma Counting pCi/g	Total pCi/g	MDA pCi/g
Ac-228		3.1376E-01	1.8494E-01	1.8620E-01	0.111E+00
AM-241	#A	-6.7064E-03	2.3883E-01	2.3883E-01	0.343E-01
Bi-212	#C	3.3845E-01	1.8683E-01	1.8825E-01	0.257E+00
BI-214		3.1461E-01	1.3500E-01	1.3661E-01	0.652E-01
CO-60	#A	6.5085E-03	5.2672E-03	5.2855E-03	0.162E-01
CS-137	A	1.6307E-02	3.7933E-02	3.7949E-02	0.309E-01
EU-152	#A	-3.1785E-02	1.6302E-02	1.6523E-02	0.874E-01
EU-154	C	6.0577E-02	6.4153E-02	6.4358E-02	0.556E-01
K-40		1.9447E+00	8.6595E-01	8.7646E-01	0.846E+00
Pa-234	C	1.8258E-01	1.2934E-01	1.3032E-01	0.668E-01
Pb-210		7.3686E-01	7.5718E-01	7.5940E-01	0.552E+00
Pb-212		1.2424E-01	7.2843E-02	7.3455E-02	0.599E-01
PB-214		1.5986E-01	1.0018E-01	1.0084E-01	0.652E-01
RA-226	A	5.4621E-01	8.1446E-01	8.1550E-01	0.665E+00
Th-230	#A	-1.1926E+01	5.3314E+00	5.3314E+00	0.282E+01
Th-234	#A	-9.8664E-01	1.9362E+00	1.9385E+00	0.859E+00
Tl-208	#A	-1.2594E-02	1.4068E-02	1.4250E-02	0.676E-01
U-235	#A	-1.2423E-02	1.2276E-01	1.2276E-01	0.502E-01

- All peaks for activity calculation had bad shape.
* - Activity omitted from total
& - Activity omitted from total and all peaks had bad shape.
< - MDA value printed.
A - Activity printed, but activity < MDA.
B - Activity < MDA and failed test.
C - Area < Critical level.
F - Failed fraction or key line test.
H - Halflife limit exceeded

---------- S U M M A R Y ----------

Total Activity (42.2 to 3353.9 keV) 2.857E+00 pCi/g

Laboratory: New World Technology

ORTEC g v - i (3263) Npp32 G53W3.10 21-JUN-2010 17:44:31
New World Technology Spectrum name: 3N000554.An1

Sample description
Parcel E 03-PET-172-03 339g
6/21/10 13:20

Acquisition information
Start time: 21-Jun-2010 16:59:20
Live time: 2700
Real time: 2702

- -

***** S U M M A R Y O F N U C L I D E S I N S A M P L E *****

Nuclide		Time of Count Activity pCi/g	Uncertainty 2 Sigma Counting pCi/g	Total pCi/g	MDA pCi/g
Ac-228		4.7661E-01	2.2952E-01	2.3188E-01	0.120E+00
AM-241	#A	-3.8859E-03	1.0518E+00	1.0518E+00	0.880E-01
Bi-212	#A	1.2516E-01	1.5985E-01	1.6008E-01	0.271E+00
BI-214	#	2.5781E-01	1.3350E-01	1.3459E-01	0.667E-01
CO-60	#	5.4101E-02	5.6248E-02	5.6367E-02	0.387E-01
CS-137	#	4.5349E-02	3.9106E-02	3.9225E-02	0.236E-01
EU-152	A	-2.4075E-01	1.8650E-01	1.8762E-01	0.133E+00
EU-154	A	3.7620E-02	5.9719E-02	5.9804E-02	0.697E-01
K-40	#	6.0788E+00	1.0770E+00	1.1571E+00	0.269E+00
Pa-234	#C	1.2791E-01	1.6774E-01	1.6811E-01	0.102E+00
Pb-210	#A	-1.7480E-01	1.1940E+00	1.1941E+00	0.686E+00
Pb-212		1.2735E-01	8.9802E-02	9.0324E-02	0.794E-01
PB-214	#	1.7816E-01	1.2573E-01	1.2638E-01	0.721E-01
RA-226	A	6.5098E-02	1.2306E+00	1.2306E+00	0.103E+01
Th-230	#A	-1.1546E+01	6.7758E+01	6.7786E+01	0.603E+01
Th-234	#A	2.4579E-01	1.7812E+00	1.7814E+00	0.136E+01
Tl-208	A	2.9599E-02	2.1304E-02	2.1963E-02	0.760E-01
U-235	C	7.7547E-02	8.2948E-02	8.3155E-02	0.663E-01

- All peaks for activity calculation had bad shape.
* - Activity omitted from total
& - Activity omitted from total and all peaks had bad shape.
< - MDA value printed.
A - Activity printed, but activity < MDA.
B - Activity < MDA and failed test.
C - Area < Critical level.
F - Failed fraction or key line test.
H - Halflife limit exceeded

---------- S U M M A R Y ----------

Total Activity (34.9 to 2779.2 keV) 7.164E+00 pCi/g

Laboratory: New World Technology

ORTEC g v - i (3263) Npp32 G53W3.10 22-JUN-2010 10:57:53
New World Technology Spectrum name: 4N000303.An1

Sample description
Parcel E 03-PET-172-04 354g
6/21/10 13:25

Acquisition information
Start time: 22-Jun-2010 10:08:41
Live time: 2700
Real time: 2702

- -

***** S U M M A R Y O F N U C L I D E S I N S A M P L E *****

Nuclide		Time of Count Activity pCi/g	Uncertainty Counting pCi/g	2 Sigma Total pCi/g	MDA pCi/g
Ac-228		2.3954E-01	1.3921E-01	1.4019E-01	0.106E+00
AM-241	#A	4.4006E-01	7.5383E-01	7.5485E-01	0.509E+00
Bi-212		2.3455E-01	2.8060E-01	2.8105E-01	0.190E+00
BI-214		2.9997E-01	1.6270E-01	1.6392E-01	0.762E-01
CO-60	#A	-9.6174E-03	5.7212E-02	5.7215E-02	0.356E-01
CS-137		2.9784E-02	3.5682E-02	3.5738E-02	0.267E-01
EU-152	#A	-3.5079E-01	1.0486E+01	1.0486E+01	0.140E+00
EU-154	C	8.8841E-02	1.1285E-01	1.1310E-01	0.771E-01
K-40	A	8.6433E-01	9.5808E-01	9.5996E-01	0.101E+01
Pa-234	#C	1.3522E-01	1.0560E-01	1.0626E-01	0.103E+00
Pb-210	#C	0.0000E+00	1.9635E+00	1.9635E+00	0.000E+00
Pb-212	#A	5.9392E-03	1.7285E-02	1.7291E-02	0.879E-01
Pb-214		2.2309E-01	1.2085E-01	1.2191E-01	0.614E-01
RA-226	A	9.0814E-02	1.0775E+00	1.0775E+00	0.904E+00
Th-230	#A	-3.0513E+01	3.0719E+02	3.0724E+02	0.180E+02
Th-234	#A	-2.8966E+00	7.6363E+00	7.6413E+00	0.205E+01
Tl-208	C	5.7226E-02	3.9403E-02	4.0732E-02	0.193E-01
U-235	#A	4.4289E-02	4.8241E-02	4.8357E-02	0.601E-01

- All peaks for activity calculation had bad shape.
* - Activity omitted from total
& - Activity omitted from total and all peaks had bad shape.
< - MDA value printed.
A - Activity printed, but activity < MDA.
B - Activity < MDA and failed test.
C - Area < Critical level.
F - Failed fraction or key line test.
H - Halflife limit exceeded

---------- S U M M A R Y ----------

Total Activity (40.8 to 3245.1 keV) 9.972E-01 pCi/g

Laboratory: New World Technology

ORTEC g v - i (3263) Npp32 G53W3.10 21-JUN-2010 20:34:42
New World Technology Spectrum name: 5N000352.An1

Sample description
Parcel E 03-PET-172-05 333g
6/21/10 13:30

Acquisition information
Start time: 21-Jun-2010 18:49:42
Live time: 5400
Real time: 5403

- -

***** S U M M A R Y O F N U C L I D E S I N S A M P L E *****

Nuclide		Time of Count Activity pCi/g	Uncertainty 2 Sigma Counting pCi/g	Total pCi/g	MDA pCi/g
Ac-228	C	1.2405E-01	1.1608E-01	1.1639E-01	0.983E-01
AM-241	#A	2.1436E-02	4.8923E-02	4.8960E-02	0.387E-01
Bi-212	A	8.2126E-02	1.6553E-01	1.6563E-01	0.182E+00
BI-214		1.7988E-01	7.9461E-02	8.0357E-02	0.450E-01
CO-60	#A	3.1624E-03	4.2660E-03	4.2714E-03	0.123E-01
CS-137		3.6218E-02	3.3133E-02	3.3223E-02	0.249E-01
EU-152	A	3.0021E-02	4.6409E-02	4.6478E-02	0.604E-01
EU-154	C	7.9267E-02	5.0326E-02	5.0772E-02	0.430E-01
K-40	#	2.3181E+00	7.9824E-01	8.1437E-01	0.693E+00
Pa-234	C	1.1659E-01	8.8088E-02	8.8677E-02	0.669E-01
Pb-210	#A	6.6033E-01	9.6837E-01	9.6975E-01	0.683E+00
Pb-212		1.1607E-01	5.7825E-02	5.8497E-02	0.490E-01
Pb-214		2.1918E-01	8.1170E-02	8.2683E-02	0.467E-01
RA-226	A	3.9557E-01	6.6861E-01	6.6928E-01	0.536E+00
Th-230	#A	1.0273E+00	3.7825E+00	3.7865E+00	0.316E+01
Th-234	#A	-1.1455E+00	1.6118E+00	1.6155E+00	0.800E+00
Tl-208	#	5.1511E-02	3.4242E-02	3.5479E-02	0.303E-01
U-235	A	1.8208E-02	4.9701E-02	4.9720E-02	0.359E-01

- All peaks for activity calculation had bad shape.
* - Activity omitted from total
& - Activity omitted from total and all peaks had bad shape.
< - MDA value printed.
A - Activity printed, but activity < MDA.
B - Activity < MDA and failed test.
C - Area < Critical level.
F - Failed fraction or key line test.
H - Halflife limit exceeded

---------- S U M M A R Y ----------

Total Activity (37.9 to 3020.7 keV) 2.921E+00 pCi/g

Laboratory: New World Technology

ORTEC g v - i (3263) Npp32 G53W3.10 21-JUN-2010 18:45:19
New World Technology Spectrum name: 6N000405.An1

Sample description
Parcel E 03-PET-172-06 330g
6/21/10 13:35

Acquisition information
Start time: 21-Jun-2010 18:00:06
Live time: 2700
Real time: 2704

- -

***** S U M M A R Y O F N U C L I D E S I N S A M P L E *****

Nuclide		Time of Count Activity pCi/g	Uncertainty Counting pCi/g	2 Sigma Total pCi/g	MDA pCi/g
Ac-228		3.2114E-01	2.1193E-01	2.1309E-01	0.118E+00
AM-241	#A	6.2030E-02	1.1339E-01	1.1352E-01	0.763E-01
Bi-212	#C	3.1391E-01	2.0523E-01	2.0634E-01	0.260E+00
BI-214		3.3453E-01	1.3566E-01	1.3747E-01	0.511E-01
CO-60	#A	9.9640E-03	4.5985E-02	4.5990E-02	0.301E-01
CS-137	A	4.0979E-03	3.8466E-02	3.8467E-02	0.332E-01
EU-152	#A	5.3226E-03	3.9037E-03	3.9297E-03	0.107E+00
EU-154	A	6.1430E-02	4.1772E-02	4.2094E-02	0.682E-01
K-40	#	1.6400E+00	9.1548E-01	9.2256E-01	0.863E+00
Pa-234	A	7.4848E-02	7.1974E-02	7.2272E-02	0.793E-01
Pb-210	A	6.5466E-01	8.3514E-01	8.3669E-01	0.675E+00
Pb-212		1.5520E-01	8.6702E-02	8.7504E-02	0.690E-01
PB-214		1.3271E-01	1.0017E-01	1.0062E-01	0.489E-01
RA-226	A	1.9111E-01	9.5700E-01	9.5711E-01	0.796E+00
Th-230	#	1.0348E+01	9.4590E+00	9.6202E+00	0.618E+01
Th-234	#A	-3.0099E-01	1.3006E+00	1.3009E+00	0.990E+00
Tl-208	A	6.2434E-02	3.0956E-02	3.2940E-02	0.813E-01
U-235	A	1.0726E-02	3.1312E-02	3.1322E-02	0.556E-01

- All peaks for activity calculation had bad shape.
* - Activity omitted from total
& - Activity omitted from total and all peaks had bad shape.
< - MDA value printed.
A - Activity printed, but activity < MDA.
B - Activity < MDA and failed test.
C - Area < Critical level.
F - Failed fraction or key line test.
H - Halflife limit exceeded

---------- S U M M A R Y ----------

Total Activity (33.3 to 2659.2 keV) 1.293E+01 pCi/g

Laboratory: New World Technology

ORTEC g v - i (3263) Npp32 G53W3.10 22-JUN-2010 09:41:41
New World Technology Spectrum name: 6N000404.An1

Sample description
Parcel E 03-PET-172-07 348g
6/21/10 13:40

Acquisition information
Start time: 21-Jun-2010 16:28:56
Live time: 2700
Real time: 2704

- -

***** S U M M A R Y O F N U C L I D E S I N S A M P L E *****

Nuclide		Time of Count Activity pCi/g	Uncertainty Counting pCi/g	2 Sigma Total pCi/g	MDA pCi/g
Ac-228	#C	4.1823E-01	2.4604E-01	2.4773E-01	0.114E+00
AM-241	#A	2.4019E-02	6.1260E-02	6.1298E-02	0.496E-01
Bi-212		3.3273E-01	3.0423E-01	3.0507E-01	0.222E+00
BI-214		1.2232E-01	6.7052E-02	6.7544E-02	0.318E-01
CO-60	#A	-5.6692E-03	1.2912E-01	1.2912E-01	0.257E-01
CS-137		3.0223E-02	3.6793E-02	3.6849E-02	0.283E-01
EU-152	A	-2.6109E-01	1.0444E+01	1.0444E+01	0.826E-01
EU-154	#A	6.7717E-03	6.7458E-03	6.7702E-03	0.626E-01
K-40	#	1.1735E+00	7.3994E-01	7.4443E-01	0.689E+00
Pa-234	C	2.5114E-01	1.3444E-01	1.3623E-01	0.874E-01
Pb-210		7.3770E-01	1.0507E+00	1.0522E+00	0.676E+00
Pb-212	C	1.1634E-01	1.0947E-01	1.0982E-01	0.615E-01
PB-214		1.7302E-01	1.2002E-01	1.2066E-01	0.641E-01
RA-226	A	2.1473E-01	7.6634E-01	7.6651E-01	0.638E+00
Th-230	A	3.1567E-01	6.7794E+00	6.7796E+00	0.558E+01
Th-234	#A	-2.8152E-01	1.8162E+00	1.8164E+00	0.106E+01
Tl-208	#A	1.7909E-04	1.4079E-04	1.4445E-04	0.652E-01
U-235	A	1.9995E-02	7.4098E-02	7.4114E-02	0.482E-01

- All peaks for activity calculation had bad shape.
* - Activity omitted from total
& - Activity omitted from total and all peaks had bad shape.
< - MDA value printed.
A - Activity printed, but activity < MDA.
B - Activity < MDA and failed test.
C - Area < Critical level.
F - Failed fraction or key line test.
H - Halflife limit exceeded

---------- S U M M A R Y ----------

Total Activity (33.3 to 2659.2 keV) 1.802E+00 pCi/g

Laboratory: New World Technology

ORTEC g v - i (3263) Npp32 G53W3.10 22-JUN-2010 09:32:17
New World Technology Spectrum name: 6N000406.An1

Sample description
Parcel E 03-PET-172-07DUP 348g
6/21/10 13:40

Acquisition information
Start time: 21-Jun-2010 18:51:08
Live time: 2700
Real time: 2704

- -

***** S U M M A R Y O F N U C L I D E S I N S A M P L E *****

Nuclide		Time of Count Activity pCi/g	Uncertainty 2 Sigma Counting pCi/g	Total pCi/g	MDA pCi/g
Ac-228	C	1.5216E-01	1.3725E-01	1.3766E-01	0.101E+00
AM-241	#A	5.6106E-02	7.7332E-02	7.7493E-02	0.561E-01
Bi-212	A	-4.7280E-02	4.8696E-01	4.8697E-01	0.186E+00
BI-214		2.7557E-01	1.5209E-01	1.5319E-01	0.648E-01
CO-60	#A	1.0582E-02	2.2989E-02	2.3001E-02	0.180E-01
CS-137	A	9.8837E-03	4.1394E-02	4.1400E-02	0.347E-01
EU-152	#A	-6.0296E-02	8.5769E-02	8.5922E-02	0.865E-01
EU-154	A	1.5229E-02	1.3565E-02	1.3626E-02	0.635E-01
K-40	#	1.1375E+00	8.2696E-01	8.3074E-01	0.819E+00
Pa-234	C	1.8271E-01	1.2920E-01	1.3018E-01	0.810E-01
Pb-210	#	6.8470E-01	8.8903E-01	8.9062E-01	0.618E+00
Pb-212	A	2.0004E-02	6.4593E-02	6.4611E-02	0.636E-01
PB-214		1.3783E-01	1.0791E-01	1.0836E-01	0.572E-01
RA-226	A	2.7468E-01	8.9101E-01	8.9125E-01	0.737E+00
Th-230	#A	-4.1506E-01	1.1878E+01	1.1878E+01	0.199E+01
Th-234	A	4.3431E-01	1.3731E+00	1.3738E+00	0.101E+01
Tl-208	#	8.9882E-02	5.9368E-02	6.1541E-02	0.643E-01
U-235	A	8.7303E-03	5.4565E-02	5.4569E-02	0.468E-01

- All peaks for activity calculation had bad shape.
* - Activity omitted from total
& - Activity omitted from total and all peaks had bad shape.
< - MDA value printed.
A - Activity printed, but activity < MDA.
B - Activity < MDA and failed test.
C - Area < Critical level.
F - Failed fraction or key line test.
H - Halflife limit exceeded

---------- S U M M A R Y ----------

Total Activity (33.3 to 2659.2 keV) 1.641E+00 pCi/g

Laboratory: New World Technology

ORTEC g v - i (3263) Npp32 G53W3.10 21-JUN-2010 19:27:51
New World Technology Spectrum name: 2N000489.An1

Sample description
Parcel E 03-PET-172-08 376g
6/21/10 13:45

Acquisition information
Start time: 21-Jun-2010 18:37:57
Live time: 2700
Real time: 2704

- -

***** S U M M A R Y O F N U C L I D E S I N S A M P L E *****

Nuclide		Time of Count Activity pCi/g	Uncertainty Counting pCi/g	2 Sigma Total pCi/g	MDA pCi/g
Ac-228	C	1.6670E-01	1.3368E-01	1.3418E-01	0.145E+00
AM-241	#A	9.6645E-02	3.5543E-01	3.5553E-01	0.260E+00
Bi-212		2.5204E-01	1.9944E-01	2.0017E-01	0.149E+00
BI-214		2.3937E-01	1.0139E-01	1.0264E-01	0.641E-01
CO-60	#A	-2.2916E-02	6.8353E-02	6.8371E-02	0.304E-01
CS-137		7.4473E-02	4.5162E-02	4.5438E-02	0.295E-01
EU-152	#A	-1.5495E-01	1.6785E-01	1.6837E-01	0.119E+00
EU-154	C	1.1161E-01	7.5480E-02	7.6070E-02	0.543E-01
K-40	#	1.4365E+00	1.0063E+00	1.0112E+00	0.999E+00
Pa-234	#A	6.4219E-02	1.1700E-01	1.1714E-01	0.101E+00
Pb-210	#C	0.0000E+00	4.3945E+00	4.3945E+00	0.000E+00
Pb-212	#A	-1.6925E-02	1.0355E-01	1.0355E-01	0.725E-01
PB-214		2.6160E-01	1.7211E-01	1.7313E-01	0.750E-01
RA-226	A	4.4779E-01	1.0275E+00	1.0281E+00	0.844E+00
Th-230	#A	-1.1135E+01	1.0397E+02	1.0399E+02	0.962E+01
Th-234	A	1.0069E+00	1.5231E+00	1.5261E+00	0.127E+01
Tl-208	#A	1.0747E-02	3.7799E-02	3.7805E-02	0.341E-01
U-235	A	4.4371E-02	8.6984E-02	8.7049E-02	0.579E-01

- All peaks for activity calculation had bad shape.
* - Activity omitted from total
& - Activity omitted from total and all peaks had bad shape.
< - MDA value printed.
A - Activity printed, but activity < MDA.
B - Activity < MDA and failed test.
C - Area < Critical level.
F - Failed fraction or key line test.
H - Halflife limit exceeded

---------- S U M M A R Y ----------

Total Activity (32.4 to 2597.5 keV) 2.012E+00 pCi/g

Laboratory: New World Technology

ORTEC g v - i (3263) Npp32 G53W3.10 21-JUN-2010 19:27:31
New World Technology Spectrum name: 3N000555.An1

Sample description
Parcel E 03-PET-172-09 338g
6/21/10 13:50

Acquisition information
Start time: 21-Jun-2010 18:39:35
Live time: 2700
Real time: 2702

- -

***** S U M M A R Y O F N U C L I D E S I N S A M P L E *****

Nuclide		Time of Count Activity pCi/g	Uncertainty 2 Sigma Counting pCi/g	Total pCi/g	MDA pCi/g
Ac-228		2.9861E-01	1.8101E-01	1.8218E-01	0.139E+00
AM-241	A	8.9479E-03	8.0420E-02	8.0424E-02	0.660E-01
Bi-212	A	1.1570E-01	2.8992E-01	2.9003E-01	0.241E+00
BI-214		3.4434E-01	1.2461E-01	1.2670E-01	0.580E-01
CO-60	#A	-2.4088E-02	8.2222E-02	8.2238E-02	0.360E-01
CS-137		7.7076E-02	4.9726E-02	4.9995E-02	0.329E-01
EU-152	#A	-4.8476E-01	3.5610E+00	3.5612E+00	0.130E+00
EU-154	C	1.3494E-01	1.1337E-01	1.1394E-01	0.704E-01
K-40		5.6403E+00	1.0409E+00	1.1124E+00	0.270E+00
Pa-234	A	8.2344E-02	1.1040E-01	1.1063E-01	0.119E+00
Pb-210	A	1.3385E-01	8.6872E-01	8.6879E-01	0.758E+00
Pb-212	C	1.9651E-01	1.3010E-01	1.3096E-01	0.818E-01
PB-214		1.9894E-01	1.1851E-01	1.1937E-01	0.851E-01
RA-226	A	3.0126E-02	1.1113E+00	1.1113E+00	0.938E+00
Th-230	#A	-1.1803E+01	1.0938E+02	1.0940E+02	0.734E+01
Th-234	A	6.6968E-02	1.4113E+00	1.4113E+00	0.133E+01
Tl-208		1.0986E-01	7.0738E-02	7.3460E-02	0.561E-01
U-235	C	1.0539E-01	1.0027E-01	1.0059E-01	0.615E-01

- All peaks for activity calculation had bad shape.
* - Activity omitted from total
& - Activity omitted from total and all peaks had bad shape.
< - MDA value printed.
A - Activity printed, but activity < MDA.
B - Activity < MDA and failed test.
C - Area < Critical level.
F - Failed fraction or key line test.
H - Halflife limit exceeded

---------- S U M M A R Y ----------

Total Activity (34.9 to 2779.2 keV) 6.669E+00 pCi/g

Laboratory: New World Technology

ORTEC g v - i (3263) Npp32 G53W3.10 21-JUN-2010 20:23:31
New World Technology Spectrum name: 2N000490.An1

Sample description
Parcel E 03-PET-172-10 345g
6/21/10 13:55

Acquisition information
Start time: 21-Jun-2010 19:33:48
Live time: 2700
Real time: 2704

- -

***** S U M M A R Y O F N U C L I D E S I N S A M P L E *****

Nuclide		Time of Count Activity pCi/g	Uncertainty Counting pCi/g	2 Sigma Total pCi/g	MDA pCi/g
Ac-228	C	2.1350E-01	1.7563E-01	1.7625E-01	0.150E+00
AM-241	#A	6.9796E-02	3.9953E-01	3.9958E-01	0.298E+00
Bi-212	A	2.9109E-02	1.9571E-01	1.9572E-01	0.172E+00
BI-214		4.1826E-01	1.4050E-01	1.4323E-01	0.615E-01
CO-60	#A	3.0374E-02	1.5295E-02	1.5432E-02	0.314E-01
CS-137		7.9978E-02	5.0901E-02	5.1184E-02	0.340E-01
EU-152	#A	-1.6400E-01	1.1493E-01	1.1577E-01	0.151E+00
EU-154	A	5.0342E-02	6.4389E-02	6.4530E-02	0.846E-01
K-40	A	8.4435E-01	1.1731E+00	1.1745E+00	0.119E+01
Pa-234	#C	2.3961E-01	1.9577E-01	1.9689E-01	0.110E+00
Pb-210	#C	0.0000E+00	5.0693E+00	5.0693E+00	0.000E+00
Pb-212	C	1.6054E-01	1.2782E-01	1.2841E-01	0.770E-01
PB-214		3.1858E-01	1.3424E-01	1.3618E-01	0.597E-01
RA-226	A	2.7481E-01	9.6364E-01	9.6386E-01	0.802E+00
Th-230	#A	-1.3309E+01	1.9980E+02	1.9981E+02	0.904E+01
Th-234	#A	1.2956E+00	2.0888E+00	2.0924E+00	0.141E+01
Tl-208	#	8.7144E-02	7.4204E-02	7.4428E-02	0.436E-01
U-235	#A	-1.0740E-02	1.0784E-01	1.0784E-01	0.564E-01

- All peaks for activity calculation had bad shape.
* - Activity omitted from total
& - Activity omitted from total and all peaks had bad shape.
< - MDA value printed.
A - Activity printed, but activity < MDA.
B - Activity < MDA and failed test.
C - Area < Critical level.
F - Failed fraction or key line test.
H - Halflife limit exceeded

---------- S U M M A R Y ----------

Total Activity (32.4 to 2597.5 keV) 9.040E-01 pCi/g

Laboratory: New World Technology

ORTEC g v - i (3263) Npp32 G53W3.10 21-JUN-2010 20:23:57
New World Technology Spectrum name: 3N000556.An1

Sample description
Parcel E 03-PET-172-11 333g
6/21/10 14:00

Acquisition information
Start time: 21-Jun-2010 19:35:23
Live time: 2700
Real time: 2702

- -

***** S U M M A R Y O F N U C L I D E S I N S A M P L E *****

Nuclide		Time of Count Activity pCi/g	Uncertainty 2 Sigma Counting pCi/g	Total pCi/g	MDA pCi/g
Ac-228		2.9556E-01	1.4942E-01	1.5081E-01	0.906E-01
AM-241	A	2.9820E-02	1.0900E-01	1.0903E-01	0.887E-01
Bi-212	#A	-1.0198E-01	1.8124E+00	1.8124E+00	0.237E+00
BI-214		1.9149E-01	9.6174E-02	9.7013E-02	0.472E-01
CO-60	#A	-1.6074E-03	4.0587E-02	4.0587E-02	0.374E-01
CS-137		4.6949E-02	4.7656E-02	4.7760E-02	0.347E-01
EU-152	#A	-4.8552E-01	3.3263E+00	3.3265E+00	0.140E+00
EU-154	C	7.7131E-02	6.7438E-02	6.7754E-02	0.639E-01
K-40		3.2277E+00	9.0416E-01	9.3163E-01	0.347E+00
Pa-234	A	3.9638E-02	1.1283E-01	1.1289E-01	0.798E-01
Pb-210	A	1.1024E-01	8.8025E-01	8.8029E-01	0.769E+00
Pb-212	A	3.9435E-02	6.1981E-02	6.2054E-02	0.770E-01
PB-214	C	9.6684E-02	1.3193E-01	1.3212E-01	0.851E-01
RA-226	A	4.9828E-02	1.1435E+00	1.1435E+00	0.963E+00
Th-230	#A	-9.9029E+00	4.3496E+01	4.3528E+01	0.677E+01
Th-234	#A	-2.5618E-01	1.9732E+00	1.9733E+00	0.139E+01
Tl-208	#A	-2.1564E-02	4.2659E-02	4.2836E-02	0.605E-01
U-235	C	1.1647E-01	1.1777E-01	1.1810E-01	0.656E-01

- All peaks for activity calculation had bad shape.
* - Activity omitted from total
& - Activity omitted from total and all peaks had bad shape.
< - MDA value printed.
A - Activity printed, but activity < MDA.
B - Activity < MDA and failed test.
C - Area < Critical level.
F - Failed fraction or key line test.
H - Halflife limit exceeded

---------- S U M M A R Y ----------

Total Activity (34.9 to 2779.2 keV) 3.715E+00 pCi/g

Laboratory: New World Technology

ORTEC g v - i (3263) Npp32 G53W3.10 21-JUN-2010 20:32:20
New World Technology Spectrum name: 6N000407.An1

Sample description
Parcel E 03-PET-172-12 369g
6/21/10 14:05

Acquisition information
Start time: 21-Jun-2010 19:46:15
Live time: 2700
Real time: 2704

- -

***** S U M M A R Y O F N U C L I D E S I N S A M P L E *****

Nuclide		Time of Count Activity pCi/g	Uncertainty 2 Sigma Counting pCi/g	Total pCi/g	MDA pCi/g
Ac-228	#	2.7725E-01	1.7135E-01	1.7242E-01	0.993E-01
AM-241	#A	5.1284E-02	1.0238E-01	1.0249E-01	0.690E-01
Bi-212	A	1.0125E-02	2.5063E-01	2.5063E-01	0.219E+00
BI-214		1.3594E-01	1.1186E-01	1.1222E-01	0.622E-01
CO-60	#	2.1995E-02	2.2384E-02	2.2434E-02	0.182E-01
CS-137	A	1.6720E-02	2.8537E-02	2.8559E-02	0.231E-01
EU-152	#A	-3.0244E-03	1.8187E-03	1.8367E-03	0.992E-01
EU-154	A	-6.2907E-02	1.5274E-01	1.5283E-01	0.615E-01
K-40		3.2786E+00	9.7765E-01	1.0039E+00	0.772E+00
Pa-234	C	1.4231E-01	9.1731E-02	9.2574E-02	0.702E-01
Pb-210		1.2290E+00	8.5054E-01	8.5590E-01	0.562E+00
Pb-212		1.8971E-01	7.1700E-02	7.3141E-02	0.531E-01
PB-214		2.3569E-01	1.0889E-01	1.1020E-01	0.686E-01
RA-226	#A	-1.4136E-01	2.2656E+00	2.2656E+00	0.744E+00
Th-230	#	8.4816E+00	8.6710E+00	8.7893E+00	0.552E+01
Th-234	#	1.3384E+00	1.5570E+00	1.5622E+00	0.102E+01
Tl-208	C	1.4043E-01	6.3514E-02	6.8377E-02	0.606E-01
U-235	C	8.0357E-02	7.1049E-02	7.1308E-02	0.420E-01

- All peaks for activity calculation had bad shape.
* - Activity omitted from total
& - Activity omitted from total and all peaks had bad shape.
< - MDA value printed.
A - Activity printed, but activity < MDA.
B - Activity < MDA and failed test.
C - Area < Critical level.
F - Failed fraction or key line test.
H - Halflife limit exceeded

---------- S U M M A R Y ----------

Total Activity (33.3 to 2659.2 keV) 5.346E+00 pCi/g

Laboratory: New World Technology

ORTEC g v - i (3263) Npp32 G53W3.10 21-JUN-2010 20:34:23
New World Technology Spectrum name: 7N000392.An1

Sample description
Parcel E 03-PET-172-13 371g
6/21/10 14:10

Acquisition information
Start time: 21-Jun-2010 19:48:28
Live time: 2700
Real time: 2703

- -

***** S U M M A R Y O F N U C L I D E S I N S A M P L E *****

Nuclide		Time of Count Activity pCi/g	Uncertainty 2 Sigma Counting pCi/g	Total pCi/g	MDA pCi/g
Ac-228	C	1.7243E-01	1.3453E-01	1.3505E-01	0.112E+00
AM-241	#A	-3.3868E-04	6.1727E-02	6.1727E-02	0.498E-01
Bi-212	#A	-8.0008E-02	2.6370E+00	2.6370E+00	0.141E+00
BI-214		2.2550E-01	1.2256E-01	1.2347E-01	0.637E-01
CO-60	#A	-8.9169E-04	4.2134E-03	4.2138E-03	0.242E-01
CS-137	A	3.2741E-03	5.3600E-02	5.3600E-02	0.450E-01
EU-152	A	-5.1622E-02	6.8172E-02	6.8313E-02	0.122E+00
EU-154	C	1.2926E-01	1.1278E-01	1.1331E-01	0.691E-01
K-40		1.5430E+00	1.0605E+00	1.0659E+00	0.105E+01
Pa-234	#A	6.5123E-02	1.0149E-01	1.0165E-01	0.690E-01
Pb-210		1.0749E+00	8.7039E-01	8.7449E-01	0.610E+00
Pb-212	C	7.3243E-02	9.2352E-02	9.2521E-02	0.730E-01
PB-214	#A	6.2875E-02	1.0533E-01	1.0542E-01	0.699E-01
RA-226	A	6.1800E-01	9.0883E-01	9.1003E-01	0.733E+00
Th-230	#A	-1.1105E+01	8.8406E+01	8.8426E+01	0.431E+01
Th-234	#A	-1.6480E+00	4.8454E+00	4.8479E+00	0.107E+01
Tl-208	A	-1.8478E-02	1.2333E-02	1.2776E-02	0.764E-01
U-235	C	7.8163E-02	9.3693E-02	9.3879E-02	0.523E-01

- All peaks for activity calculation had bad shape.
* - Activity omitted from total
& - Activity omitted from total and all peaks had bad shape.
< - MDA value printed.
A - Activity printed, but activity < MDA.
B - Activity < MDA and failed test.
C - Area < Critical level.
F - Failed fraction or key line test.
H - Halflife limit exceeded

---------- S U M M A R Y ----------

Total Activity (42.2 to 3353.9 keV) 2.843E+00 pCi/g

Laboratory: New World Technology

ORTEC g v - i (3263) Npp32 G53W3.10 22-JUN-2010 07:35:19
New World Technology Spectrum name: 1N000788.An1

Sample description
Parcel E 03-PET-172-14 348g
6/21/10 14:15

Acquisition information
Start time: 22-Jun-2010 06:44:28
Live time: 2700
Real time: 2701

- -

***** S U M M A R Y O F N U C L I D E S I N S A M P L E *****

Nuclide		Time of Count Activity pCi/g	Uncertainty Counting pCi/g	2 Sigma Total pCi/g	MDA pCi/g
Ac-228	A	3.6088E-02	4.0363E-02	4.0440E-02	0.841E-01
AM-241	#A	2.2385E-02	5.0128E-02	5.0168E-02	0.347E-01
Bi-212		3.4161E-01	2.4295E-01	2.4406E-01	0.115E+00
BI-214		1.6885E-01	1.0480E-01	1.0540E-01	0.258E-01
CO-60	#	6.1090E-02	3.2125E-02	3.2389E-02	0.966E-02
CS-137	A	1.8376E-02	2.7873E-02	2.7900E-02	0.210E-01
EU-152	#A	-1.4220E-01	1.3379E-01	1.3433E-01	0.720E-01
EU-154	A	1.9831E-02	2.3568E-02	2.3628E-02	0.273E-01
K-40	#	5.1392E-01	3.2681E-01	3.2876E-01	0.136E+00
Pa-234	#A	1.3523E-02	4.8601E-02	4.8616E-02	0.454E-01
Pb-210	#A	8.4180E-02	5.3975E-01	5.3979E-01	0.457E+00
Pb-212	A	1.2722E-02	1.8170E-02	1.8195E-02	0.421E-01
Pb-214	C	5.0946E-02	6.1126E-02	6.1235E-02	0.463E-01
RA-226	#A	-3.1063E-01	7.7176E-01	7.7176E-01	0.220E+00
Th-230	#	3.1441E+00	4.2895E+00	4.3225E+00	0.284E+01
Th-234	#A	6.7804E-01	9.4545E-01	9.4765E-01	0.870E+00
Tl-208	#	5.3528E-02	4.2087E-02	4.3180E-02	0.174E-01
U-235	C	7.7592E-02	7.6306E-02	7.6532E-02	0.414E-01

- All peaks for activity calculation had bad shape.
* - Activity omitted from total
& - Activity omitted from total and all peaks had bad shape.
< - MDA value printed.
A - Activity printed, but activity < MDA.
B - Activity < MDA and failed test.
C - Area < Critical level.
F - Failed fraction or key line test.
H - Halflife limit exceeded

---------- S U M M A R Y ----------

Total Activity (36.6 to 2885.2 keV) 1.139E+00 pCi/g

Laboratory: New World Technology

ORTEC g v - i (3263) Npp32 G53W3.10 22-JUN-2010 13:02:11
New World Technology Spectrum name: 2N000492.An1

Sample description
Parcel E 03-PET-172-15 350g
6/21/10 14:20

Acquisition information
Start time: 22-Jun-2010 10:42:52
Live time: 5400
Real time: 5407

- -

***** S U M M A R Y O F N U C L I D E S I N S A M P L E *****

Nuclide		Time of Count Activity pCi/g	Uncertainty Counting pCi/g	2 Sigma Total pCi/g	MDA pCi/g
Ac-228	A	7.5899E-02	1.0456E-01	1.0469E-01	0.109E+00
AM-241	#A	-1.5713E-01	5.5156E+00	5.5156E+00	0.180E+00
Bi-212		3.3040E-01	1.8196E-01	1.8335E-01	0.121E+00
BI-214		4.0902E-01	1.0149E-01	1.0507E-01	0.454E-01
CO-60	#A	-4.7137E-02	8.7722E-01	8.7722E-01	0.230E-01
CS-137		8.8138E-02	3.4668E-02	3.5171E-02	0.220E-01
EU-152	#A	-4.7996E-02	3.2727E-02	3.2979E-02	0.108E+00
EU-154	C	9.7114E-02	5.9922E-02	6.0484E-02	0.604E-01
K-40		1.7268E+00	7.6182E-01	7.7123E-01	0.754E+00
Pa-234	#C	1.1356E-01	8.2869E-02	8.3463E-02	0.829E-01
Pb-210	#C	0.0000E+00	2.2432E+00	2.2432E+00	0.000E+00
Pb-212	A	4.4556E-02	6.2250E-02	6.2343E-02	0.585E-01
PB-214		3.3101E-01	1.1485E-01	1.1728E-01	0.586E-01
RA-226	A	4.9940E-01	7.5960E-01	7.6054E-01	0.623E+00
Th-230	A	5.8858E-01	1.3897E+01	1.3898E+01	0.119E+02
Th-234	A	2.7767E-01	1.1381E+00	1.1384E+00	0.972E+00
Tl-208		9.7630E-02	5.7566E-02	5.7928E-02	0.328E-01
U-235	A	-1.1809E-02	5.6753E-02	5.6760E-02	0.455E-01

- All peaks for activity calculation had bad shape.
* - Activity omitted from total
& - Activity omitted from total and all peaks had bad shape.
< - MDA value printed.
A - Activity printed, but activity < MDA.
B - Activity < MDA and failed test.
C - Area < Critical level.
F - Failed fraction or key line test.
H - Halflife limit exceeded

---------- S U M M A R Y ----------

Total Activity (32.4 to 2597.5 keV) 2.983E+00 pCi/g

Laboratory: New World Technology

ORTEC g v - i (3263) Npp32 G53W3.10 22-JUN-2010 09:23:11
New World Technology Spectrum name: 6N000408.An1

Sample description
Parcel E 03-PET-172-16 357g
6/21/10 14:25

Acquisition information
Start time: 22-Jun-2010 08:37:58
Live time: 2700
Real time: 2704

- -

***** S U M M A R Y O F N U C L I D E S I N S A M P L E *****

Nuclide		Time of Count Activity pCi/g	Uncertainty Counting pCi/g	2 Sigma Total pCi/g	MDA pCi/g
Ac-228	A	8.0674E-02	6.0793E-02	6.1049E-02	0.961E-01
AM-241		8.0023E-02	8.3690E-02	8.3993E-02	0.656E-01
Bi-212	#A	-2.9839E-02	6.0258E-01	6.0258E-01	0.293E+00
BI-214		1.7333E-01	9.7291E-02	9.7971E-02	0.432E-01
CO-60	#A	-9.3911E-03	1.5339E+00	1.5339E+00	0.389E-01
CS-137	A	1.4966E-02	2.6683E-02	2.6701E-02	0.219E-01
EU-152	#A	-9.2311E-02	1.1865E-01	1.1890E-01	0.977E-01
EU-154	C	7.1705E-02	4.5095E-02	4.5503E-02	0.684E-01
K-40		9.0521E-01	7.8528E-01	7.8780E-01	0.798E+00
Pa-234	C	1.1611E-01	7.4097E-02	7.4791E-02	0.706E-01
Pb-210	#A	4.0907E-01	8.9491E-01	8.9547E-01	0.621E+00
Pb-212	A	3.0697E-02	6.4263E-02	6.4305E-02	0.552E-01
PB-214		2.2077E-01	1.3706E-01	1.3797E-01	0.638E-01
RA-226	A	1.1547E-01	8.4924E-01	8.4928E-01	0.710E+00
Th-230	#A	-7.3877E-01	1.0514E+01	1.0514E+01	0.384E+01
Th-234	#A	5.0757E-01	1.2021E+00	1.2031E+00	0.930E+00
Tl-208	#A	5.2824E-02	2.9612E-02	3.1106E-02	0.693E-01
U-235	C	5.5537E-02	6.4397E-02	6.4534E-02	0.459E-01

- All peaks for activity calculation had bad shape.
* - Activity omitted from total
& - Activity omitted from total and all peaks had bad shape.
< - MDA value printed.
A - Activity printed, but activity < MDA.
B - Activity < MDA and failed test.
C - Area < Critical level.
F - Failed fraction or key line test.
H - Halflife limit exceeded

---------- S U M M A R Y ----------

Total Activity (33.3 to 2659.2 keV) 1.299E+00 pCi/g

Laboratory: New World Technology

ORTEC g v - i (3263) Npp32 G53W3.10 22-JUN-2010 09:33:47
New World Technology Spectrum name: 2N000491.An1

Sample description
Parcel E 03-PET-172-17 347g
6/21/10 14:30

Acquisition information
Start time: 22-Jun-2010 08:37:39
Live time: 2700
Real time: 2704

- -

***** S U M M A R Y O F N U C L I D E S I N S A M P L E *****

Nuclide		Time of Count Activity pCi/g	Uncertainty Counting pCi/g	2 Sigma Total pCi/g	MDA pCi/g
Ac-228	C	2.0957E-01	1.6269E-01	1.6333E-01	0.136E+00
AM-241	#A	-1.2617E-03	3.5749E-01	3.5749E-01	0.277E+00
Bi-212	#	4.9245E-01	2.9815E-01	3.0003E-01	0.158E+00
BI-214		4.2335E-01	1.2074E-01	1.2398E-01	0.478E-01
CO-60	#A	2.1970E-02	1.1832E-02	1.1924E-02	0.327E-01
CS-137		5.4265E-02	4.4995E-02	4.5142E-02	0.315E-01
EU-152	#A	-5.3061E-02	3.3638E-02	3.3937E-02	0.147E+00
EU-154	C	9.5620E-02	8.7670E-02	8.8043E-02	0.803E-01
K-40	A	1.1458E+00	1.2147E+00	1.2173E+00	0.120E+01
Pa-234	C	1.6863E-01	1.3359E-01	1.3440E-01	0.143E+00
Pb-210	#C	0.0000E+00	3.6806E+00	3.6806E+00	0.000E+00
Pb-212	C	9.7936E-02	1.2330E-01	1.2352E-01	0.780E-01
PB-214		2.4967E-01	1.2233E-01	1.2363E-01	0.745E-01
RA-226	A	6.9233E-01	1.0651E+00	1.0664E+00	0.864E+00
Th-230	#A	-1.4011E+01	1.6614E+01	1.6614E+01	0.702E+01
Th-234	#A	1.4240E+00	2.2330E+00	2.2371E+00	0.148E+01
Tl-208	#A	3.0207E-02	5.6400E-02	5.6436E-02	0.433E-01
U-235	#A	3.2951E-02	4.7207E-02	4.7273E-02	0.580E-01

- All peaks for activity calculation had bad shape.
* - Activity omitted from total
& - Activity omitted from total and all peaks had bad shape.
< - MDA value printed.
A - Activity printed, but activity < MDA.
B - Activity < MDA and failed test.
C - Area < Critical level.
F - Failed fraction or key line test.
H - Halflife limit exceeded

---------- S U M M A R Y ----------

Total Activity (32.4 to 2597.5 keV) 1.220E+00 pCi/g

Laboratory: New World Technology

ORTEC g v - i (3263) Npp32 G53W3.10 22-JUN-2010 09:34:13
New World Technology Spectrum name: 3N000557.An1

Sample description
Parcel E 03-PET-172-18 347g
6/21/10 14:35

Acquisition information
Start time: 22-Jun-2010 08:38:52
Live time: 2700
Real time: 2702

- -

***** S U M M A R Y O F N U C L I D E S I N S A M P L E *****

Nuclide		Time of Count Activity pCi/g	Uncertainty 2 Sigma Counting pCi/g	Total pCi/g	MDA pCi/g
Ac-228	A	1.2612E-01	1.3542E-01	1.3570E-01	0.128E+00
AM-241	A	6.6843E-02	9.7507E-02	9.7689E-02	0.773E-01
Bi-212	#A	4.7274E-02	1.0906E-01	1.0911E-01	0.189E+00
BI-214	C	1.5389E-01	1.4185E-01	1.4222E-01	0.741E-01
CO-60	#A	-3.4424E-02	2.4074E-01	2.4076E-01	0.407E-01
CS-137		3.3199E-02	3.2493E-02	3.2569E-02	0.225E-01
EU-152	A	-4.0356E-02	2.6028E-02	2.6251E-02	0.133E+00
EU-154	#A	2.0563E-02	1.8423E-02	1.8506E-02	0.704E-01
K-40		3.8044E+00	8.5293E-01	8.9306E-01	0.263E+00
Pa-234	A	8.0566E-02	1.3406E-01	1.3425E-01	0.105E+00
Pb-210	A	6.5587E-01	1.1309E+00	1.1321E+00	0.753E+00
Pb-212	A	3.5534E-02	1.1098E-01	1.1101E-01	0.737E-01
PB-214	A	2.4863E-02	5.8999E-02	5.9026E-02	0.357E-01
RA-226	#A	-1.1219E-01	1.7999E+00	1.7999E+00	0.980E+00
Th-230	#A	-1.3189E+01	5.2757E+02	5.2758E+02	0.513E+01
Th-234	#A	-8.9109E-01	1.8678E+00	1.8697E+00	0.129E+01
Tl-208	#	1.1278E-01	7.6045E-02	7.8717E-02	0.547E-01
U-235	C	1.0666E-01	1.3418E-01	1.3442E-01	0.631E-01

- All peaks for activity calculation had bad shape.
* - Activity omitted from total
& - Activity omitted from total and all peaks had bad shape.
< - MDA value printed.
A - Activity printed, but activity < MDA.
B - Activity < MDA and failed test.
C - Area < Critical level.
F - Failed fraction or key line test.
H - Halflife limit exceeded

---------- S U M M A R Y ----------

Total Activity (34.9 to 2779.2 keV) 3.950E+00 pCi/g

Laboratory: New World Technology

Tetra Tech EC, Inc.

Client Sample ID: 03-PET-172-08

Radiochemistry

Lab Sample ID: F0F240467-001
Work Order: L3C1A
Matrix: SOLID

Date Collected: 06/21/10 1345
Date Received: 06/24/10 0930

Parameter	Result	Qual	Total Uncert. (2 σ+/-)	RL	MDL	Count Time	Prep Date	Analysis Date
Total SR BY GFPC	**EPA-905 MOD**			**pCi/g**		**Batch # 0182213**		**Yld % 65.**
Strontium Total	0.155	U	0.184	0.320	0.162	600	07/01/10	07/07/10

NOTE(S)

Data are incomplete without the case narrative.
Bold results are greater than the MDL.

U Result is less than the sample detection limit.

The MDL is an estimate of the measured concentration at which there is a 99% confidence that a given analyte is given sample matrix. This is functionally analogous to the "critical value" or the "limit of detection".

Ra-226 results analyzed by EPA 901.1 MOD were calculated and reported from the 46.09 percent abundant 609.31 KeV line of Bi-214.

Tetra Tech EC, Inc.

Client Sample ID: 03-PET-172-09

Radiochemistry

Lab Sample ID: F0F240467-002
Work Order: L3C1G
Matrix: SOLID

Date Collected: 06/21/10 1350
Date Received: 06/24/10 0930

Parameter	Result	Qual	Total Uncert. (2 σ+/-)	RL	MDL	Count Time	Prep Date	Analysis Date
Total SR BY GFPC	**EPA-905 MOD**			**pCi/g**		**Batch # 0175274**		**Yld % 61.**
Strontium Total	0.0494	U	0.248	0.320	0.260	200	06/24/10	07/01/10

NOTE(S)

Data are incomplete without the case narrative.
Bold results are greater than the MDL.

U Result is less than the sample detection limit.

The MDL is an estimate of the measured concentration at which there is a 99% confidence that a given analyte is given sample matrix. This is functionally analogous to the "critical value" or the "limit of detection".

Ra-226 results analyzed by EPA 901.1 MOD were calculated and reported from the 46.09 percent abundant 609.31 KeV line of Bi-214.

ATTACHMENT 3

QUALITY ASSURANCE SAMPLE RESULTS
(on CD only)

This page intentionally left blank.

Tetra Tech EC, Inc.

Client Sample ID: 03-PET-172-10

Radiochemistry

Lab Sample ID: F0F240470-001
Work Order: L3C12
Matrix: SOLID

Date Collected: 06/21/10 1355
Date Received: 06/24/10 0930

Parameter	Result	Qual	Total Uncert. (2 σ+/-)	RL	MDL	Count Time	Prep Date	Analysis Date
Gamma Ra-226 & hits by EPA 901.1 MOD				**pCi/g**		**Batch # 0175341**		**Yld %**
Actinium 228	0.0	U	0.154		0.127	30	06/24/10	07/12/10
Americium 241	0.0	U	0.0929		0.076	30	06/24/10	07/12/10
Bismuth 212	-0.0724	U	0.405		0.324	30	06/24/10	07/12/10
Bismuth 214	-0.0657	U	1.17		0.085	30	06/24/10	07/12/10
Cesium 137	0.00399	U	0.0382	0.0700	0.030	30	06/24/10	07/12/10
Cobalt 60	0.00197	U	0.0400		0.032	30	06/24/10	07/12/10
Europium 152	-0.00361	U	0.109		0.089	30	06/24/10	07/12/10
Europium 154	-0.0817	U	0.378		0.298	30	06/24/10	07/12/10
Lead 210	-0.526	U	2.42	1.50	0.856	30	06/24/10	07/12/10
Lead 212	-0.0226	U	0.107		0.059	30	06/24/10	07/12/10
Lead 214	-0.00197	U	0.0686		0.062	30	06/24/10	07/12/10
Potassium 40	-0.0904	U	0.708		0.529	30	06/24/10	07/12/10
Protactinium 234	-0.0601	U	0.144		0.113	30	06/24/10	07/12/10
Radium (226)	-0.0657	U	1.17	0.700	0.085	30	06/24/10	07/12/10
Thallium 208	-0.0177	U	0.123		0.036	30	06/24/10	07/12/10
Thorium 232	0.0	U	0.154		0.127	30	06/24/10	07/12/10
Thorium 234	0.799	U	1.22		0.860	30	06/24/10	07/12/10
Uranium 235	-0.00496	U	0.160		0.131	30	06/24/10	07/12/10

NOTE(S)

Data are incomplete without the case narrative.
Bold results are greater than the MDL.

U Result is less than the sample detection limit.

The MDL is an estimate of the measured concentration at which there is a 99% confidence that a given analyte is given sample matrix. This is functionally analogous to the "critical value" or the "limit of detection".

Ra-226 results analyzed by EPA 901.1 MOD were calculated and reported from the 46.09 percent abundant 609.31 KeV line of Bi-214.

Tetra Tech EC, Inc.

Client Sample ID: 03-PET-172-10 DUP

Radiochemistry

Lab Sample ID: F0F240470-001X
Work Order: L3C12
Matrix: SOLID

Date Collected: 06/21/10 1355
Date Received: 06/24/10 0930

Parameter	Result	Qual	Total Uncert. (2 σ+/-)	RL	MDL	Count Time	Prep Date	Analysis Date
Gamma Ra-226 & hits by EPA 901.1 MOD				pCi/g		Batch # 0175341		Yld %
Actinium 228	0.0	U	0.264		0.218	30	06/24/10	07/12/10
Americium 241	0.0	U	0.127		0.105	30	06/24/10	07/12/10
Bismuth 212	0.0	U	0.338		0.279	30	06/24/10	07/12/10
Bismuth 214	0.0434	U	0.102		0.083	30	06/24/10	07/12/10
Cesium 137	-0.0291	U	1.16	0.0700	0.030	30	06/24/10	07/12/10
Cobalt 60	0.0	U	0.0180		0.021	30	06/24/10	07/12/10
Europium 152	-0.00209	U	0.119		0.097	30	06/24/10	07/12/10
Europium 154	-0.0565	U	0.388		0.308	30	06/24/10	07/12/10
Lead 210	-0.0600	U	1.09	1.50	0.877	30	06/24/10	07/12/10
Lead 212	0.00770	U	0.0602		0.051	30	06/24/10	07/12/10
Lead 214	**0.0576**		0.0810		0.056	30	06/24/10	07/12/10
Potassium 40	-0.374	U	67.7		0.625	30	06/24/10	07/12/10
Protactinium 234	-0.00632	U	0.0853		0.069	30	06/24/10	07/12/10
Radium (226)	0.0434	U	0.102	0.700	0.083	30	06/24/10	07/12/10
Thallium 208	0.0177	U	0.0422		0.030	30	06/24/10	07/12/10
Thorium 232	0.0	U	0.264		0.218	30	06/24/10	07/12/10
Thorium 234	0.204	U	1.09		0.921	30	06/24/10	07/12/10
Uranium 235	-0.0238	U	0.193		0.156	30	06/24/10	07/12/10

NOTE(S)

Data are incomplete without the case narrative.
Bold results are greater than the MDL.

U Result is less than the sample detection limit.

The MDL is an estimate of the measured concentration at which there is a 99% confidence that a given analyte is given sample matrix. This is functionally analogous to the "critical value" or the "limit of detection".

Ra-226 results analyzed by EPA 901.1 MOD were calculated and reported from the 46.09 percent abundant 609.31 KeV line of Bi-214.

Tetra Tech EC, Inc.

Client Sample ID: 03-PET-172-15

Radiochemistry

Lab Sample ID: F0F240470-002
Work Order: L3C15
Matrix: SOLID

Date Collected: 06/21/10 1420
Date Received: 06/24/10 0930

Parameter	Result	Qual	Total Uncert. (2 σ+/-)	RL	MDL	Count Time	Prep Date	Analysis Date
Gamma Ra-226 & hits by EPA 901.1 MOD				**pCi/g**		**Batch # 0175341**		**Yld %**
Actinium 228	0.0	U	0.0468		0.054	30	06/24/10	07/12/10
Americium 241	0.00842	U	0.0643		0.051	30	06/24/10	07/12/10
Bismuth 212	0.100	U	0.274		0.196	30	06/24/10	07/12/10
Bismuth 214	-0.0452	U	1.81		0.096	30	06/24/10	07/12/10
Cesium 137	0.0112	U	0.0347	0.0700	0.025	30	06/24/10	07/12/10
Cobalt 60	0.0	U	0.0195		0.022	30	06/24/10	07/12/10
Europium 152	0.0297	U	0.111		0.086	30	06/24/10	07/12/10
Europium 154	-0.0428	U	0.344		0.272	30	06/24/10	07/12/10
Lead 210	-0.249	U	1.42	1.50	0.732	30	06/24/10	07/12/10
Lead 212	0.00755	U	0.0795		0.069	30	06/24/10	07/12/10
Lead 214	0.0104	U	0.0866		0.076	30	06/24/10	07/12/10
Potassium 40	-0.307	U	12.3		0.408	30	06/24/10	07/12/10
Protactinium 234	-0.00341	U	0.105		0.086	30	06/24/10	07/12/10
Radium (226)	-0.0452	U	1.81	0.700	0.096	30	06/24/10	07/12/10
Thallium 208	-0.0279	U	2.81		0.048	30	06/24/10	07/12/10
Thorium 232	0.0	U	0.0468		0.054	30	06/24/10	07/12/10
Thorium 234	-0.0675	U	0.957		0.719	30	06/24/10	07/12/10
Uranium 235	-0.0600	U	0.799		0.171	30	06/24/10	07/12/10

NOTE(S)

Data are incomplete without the case narrative.
Bold results are greater than the MDL.

U Result is less than the sample detection limit.

The MDL is an estimate of the measured concentration at which there is a 99% confidence that a given analyte is given sample matrix. This is functionally analogous to the "critical value" or the "limit of detection".

Ra-226 results analyzed by EPA 901.1 MOD were calculated and reported from the 46.09 percent abundant 609.31 KeV line of Bi-214.

ATTACHMENT 4

BACKFILL MATERIAL
RESRAD REPORT
(on CD only)

This page intentionally left blank.

Table of Contents

Part I: Mixture Sums and Single Radionuclide Guidelines

Dose Conversion Factor (and Related) Parameter Summary ... 2
Site-Specific Parameter Summary 4
Summary of Pathway Selections 8
Contaminated Zone and Total Dose Summary 9
Total Dose Components
Time = 0.000E+00 10
Time = 1.000E+00 11
Time = 3.000E+00 12
Time = 1.000E+01 13
Time = 3.000E+01 14
Time = 1.000E+02 15
Time = 3.000E+02 16
Time = 1.000E+03 17
Dose/Source Ratios Summed Over All Pathways 18
Single Radionuclide Soil Guidelines 18
Dose Per Nuclide Summed Over All Pathways 19
Soil Concentration Per Nuclide 19

Dose Conversion Factor (and Related) Parameter Summary
Dose Library: FGR 12 & FGR 11

Menu	Parameter	Current Value#	Base Case*	Parameter Name
A-1	DCF's for external ground radiation, (mrem/yr)/(pCi/g)			
A-1	At-218 (Source: FGR 12)	5.847E-03	5.847E-03	DCF1(1)
A-1	Ba-137m (Source: FGR 12)	3.606E+00	3.606E+00	DCF1(2)
A-1	Bi-210 (Source: FGR 12)	3.606E-03	3.606E-03	DCF1(3)
A-1	Bi-214 (Source: FGR 12)	9.808E+00	9.808E+00	DCF1(4)
A-1	Cs-137 (Source: FGR 12)	7.510E-04	7.510E-04	DCF1(5)
A-1	Pb-210 (Source: FGR 12)	2.447E-03	2.447E-03	DCF1(6)
A-1	Pb-214 (Source: FGR 12)	1.341E+00	1.341E+00	DCF1(7)
A-1	Po-210 (Source: FGR 12)	5.231E-05	5.231E-05	DCF1(8)
A-1	Po-214 (Source: FGR 12)	5.138E-04	5.138E-04	DCF1(9)
A-1	Po-218 (Source: FGR 12)	5.642E-05	5.642E-05	DCF1(10)
A-1	Ra-226 (Source: FGR 12)	3.176E-02	3.176E-02	DCF1(11)
A-1	Rn-222 (Source: FGR 12)	2.354E-03	2.354E-03	DCF1(12)
A-1	Sr-90 (Source: FGR 12)	7.043E-04	7.043E-04	DCF1(13)
A-1	Tl-210 (Source: no data)	0.000E+00	-2.000E+00	DCF1(14)
A-1	Y-90 (Source: FGR 12)	2.391E-02	2.391E-02	DCF1(15)
B-1	Dose conversion factors for inhalation, mrem/pCi:			
B-1	Cs-137+D	3.190E-05	3.190E-05	DCF2(1)
B-1	Pb-210+D	2.320E-02	1.360E-02	DCF2(2)
B-1	Ra-226+D	8.594E-03	8.580E-03	DCF2(3)
B-1	Sr-90+D	1.308E-03	1.300E-03	DCF2(4)
D-1	Dose conversion factors for ingestion, mrem/pCi:			
D-1	Cs-137+D	5.000E-05	5.000E-05	DCF3(1)
D-1	Pb-210+D	7.276E-03	5.370E-03	DCF3(2)
D-1	Ra-226+D	1.321E-03	1.320E-03	DCF3(3)
D-1	Sr-90+D	1.528E-04	1.420E-04	DCF3(4)
D-34	Food transfer factors:			
D-34	Cs-137+D , plant/soil concentration ratio, dimensionless	4.000E-02	4.000E-02	RTF(1,1)
D-34	Cs-137+D , beef/livestock-intake ratio, (pCi/kg)/(pCi/d)	3.000E-02	3.000E-02	RTF(1,2)
D-34	Cs-137+D , milk/livestock-intake ratio, (pCi/L)/(pCi/d)	8.000E-03	8.000E-03	RTF(1,3)
D-34				
D-34	Pb-210+D , plant/soil concentration ratio, dimensionless	1.000E-02	1.000E-02	RTF(2,1)
D-34	Pb-210+D , beef/livestock-intake ratio, (pCi/kg)/(pCi/d)	8.000E-04	8.000E-04	RTF(2,2)
D-34	Pb-210+D , milk/livestock-intake ratio, (pCi/L)/(pCi/d)	3.000E-04	3.000E-04	RTF(2,3)
D-34				
D-34	Ra-226+D , plant/soil concentration ratio, dimensionless	4.000E-02	4.000E-02	RTF(3,1)
D-34	Ra-226+D , beef/livestock-intake ratio, (pCi/kg)/(pCi/d)	1.000E-03	1.000E-03	RTF(3,2)
D-34	Ra-226+D , milk/livestock-intake ratio, (pCi/L)/(pCi/d)	1.000E-03	1.000E-03	RTF(3,3)
D-34				
D-34	Sr-90+D , plant/soil concentration ratio, dimensionless	3.000E-01	3.000E-01	RTF(4,1)
D-34	Sr-90+D , beef/livestock-intake ratio, (pCi/kg)/(pCi/d)	8.000E-03	8.000E-03	RTF(4,2)
D-34	Sr-90+D , milk/livestock-intake ratio, (pCi/L)/(pCi/d)	2.000E-03	2.000E-03	RTF(4,3)
D-5	Bioaccumulation factors, fresh water, L/kg:			
D-5	Cs-137+D , fish	2.000E+03	2.000E+03	BIOFAC(1,1)
D-5	Cs-137+D , crustacea and mollusks	1.000E+02	1.000E+02	BIOFAC(1,2)
D-5				

Dose Conversion Factor (and Related) Parameter Summary (continued)
Dose Library: FGR 12 & FGR 11

Menu	Parameter	Current Value#	Base Case*	Parameter Name
D-5	Pb-210+D , fish	3.000E+02	3.000E+02	BIOFAC(2,1)
D-5	Pb-210+D , crustacea and mollusks	1.000E+02	1.000E+02	BIOFAC(2,2)
D-5				
D-5	Ra-226+D , fish	5.000E+01	5.000E+01	BIOFAC(3,1)
D-5	Ra-226+D , crustacea and mollusks	2.500E+02	2.500E+02	BIOFAC(3,2)
D-5				
D-5	Sr-90+D , fish	6.000E+01	6.000E+01	BIOFAC(4,1)
D-5	Sr-90+D , crustacea and mollusks	1.000E+02	1.000E+02	BIOFAC(4,2)

#For DCF1(xxx) only, factors are for infinite depth & area. See ETFG table in Ground Pathway of Detailed Report.
*Base Case means Default.Lib w/o Associate Nuclide contributions.

Site-Specific Parameter Summary

Menu	Parameter	User Input	Default	Used by RESRAD (If different from user input)	Parameter Name
R011	Area of contaminated zone (m**2)	3.140E+02	1.000E+04	---	AREA
R011	Thickness of contaminated zone (m)	2.000E+00	2.000E+00	---	THICK0
R011	Fraction of contamination that is submerged	0.000E+00	0.000E+00	---	SUBMFRACT
R011	Length parallel to aquifer flow (m)	1.000E+02	1.000E+02	---	LCZPAQ
R011	Basic radiation dose limit (mrem/yr)	2.500E+01	3.000E+01	---	BRDL
R011	Time since placement of material (yr)	0.000E+00	0.000E+00	---	TI
R011	Times for calculations (yr)	1.000E+00	1.000E+00	---	T(2)
R011	Times for calculations (yr)	3.000E+00	3.000E+00	---	T(3)
R011	Times for calculations (yr)	1.000E+01	1.000E+01	---	T(4)
R011	Times for calculations (yr)	3.000E+01	3.000E+01	---	T(5)
R011	Times for calculations (yr)	1.000E+02	1.000E+02	---	T(6)
R011	Times for calculations (yr)	3.000E+02	3.000E+02	---	T(7)
R011	Times for calculations (yr)	1.000E+03	1.000E+03	---	T(8)
R011	Times for calculations (yr)	not used	0.000E+00	---	T(9)
R011	Times for calculations (yr)	not used	0.000E+00	---	T(10)
R012	Initial principal radionuclide (pCi/g): Cs-137	5.300E-02	0.000E+00	---	S1(1)
R012	Initial principal radionuclide (pCi/g): Pb-210	3.730E-01	0.000E+00	---	S1(2)
R012	Initial principal radionuclide (pCi/g): Ra-226	3.730E-01	0.000E+00	---	S1(3)
R012	Initial principal radionuclide (pCi/g): Sr-90	7.000E-02	0.000E+00	---	S1(4)
R012	Concentration in groundwater (pCi/L): Cs-137	not used	0.000E+00	---	W1(1)
R012	Concentration in groundwater (pCi/L): Pb-210	not used	0.000E+00	---	W1(2)
R012	Concentration in groundwater (pCi/L): Ra-226	not used	0.000E+00	---	W1(3)
R012	Concentration in groundwater (pCi/L): Sr-90	not used	0.000E+00	---	W1(4)
R013	Cover depth (m)	0.000E+00	0.000E+00	---	COVER0
R013	Density of cover material (g/cm**3)	not used	1.500E+00	---	DENSCV
R013	Cover depth erosion rate (m/yr)	not used	1.000E-03	---	VCV
R013	Density of contaminated zone (g/cm**3)	1.500E+00	1.500E+00	---	DENSCZ
R013	Contaminated zone erosion rate (m/yr)	1.000E-03	1.000E-03	---	VCZ
R013	Contaminated zone total porosity	4.000E-01	4.000E-01	---	TPCZ
R013	Contaminated zone field capacity	2.000E-01	2.000E-01	---	FCCZ
R013	Contaminated zone hydraulic conductivity (m/yr)	1.000E+01	1.000E+01	---	HCCZ
R013	Contaminated zone b parameter	5.300E+00	5.300E+00	---	BCZ
R013	Average annual wind speed (m/sec)	2.000E+00	2.000E+00	---	WIND
R013	Humidity in air (g/m**3)	not used	8.000E+00	---	HUMID
R013	Evapotranspiration coefficient	5.000E-01	5.000E-01	---	EVAPTR
R013	Precipitation (m/yr)	1.000E+00	1.000E+00	---	PRECIP
R013	Irrigation (m/yr)	2.000E-01	2.000E-01	---	RI
R013	Irrigation mode	overhead	overhead	---	IDITCH
R013	Runoff coefficient	2.000E-01	2.000E-01	---	RUNOFF
R013	Watershed area for nearby stream or pond (m**2)	1.000E+06	1.000E+06	---	WAREA
R013	Accuracy for water/soil computations	1.000E-03	1.000E-03	---	EPS
R014	Density of saturated zone (g/cm**3)	1.500E+00	1.500E+00	---	DENSAQ
R014	Saturated zone total porosity	4.000E-01	4.000E-01	---	TPSZ
R014	Saturated zone effective porosity	2.000E-01	2.000E-01	---	EPSZ
R014	Saturated zone field capacity	2.000E-01	2.000E-01	---	FCSZ
R014	Saturated zone hydraulic conductivity (m/yr)	1.000E+02	1.000E+02	---	HCSZ
R014	Saturated zone hydraulic gradient	2.000E-02	2.000E-02	---	HGWT

Site-Specific Parameter Summary (continued)

Menu	Parameter	User Input	Default	Used by RESRAD (If different from user input)	Parameter Name
R014	Saturated zone b parameter	5.300E+00	5.300E+00	---	BSZ
R014	Water table drop rate (m/yr)	1.000E-03	1.000E-03	---	VWT
R014	Well pump intake depth (m below water table)	1.000E+01	1.000E+01	---	DWIBWT
R014	Model: Nondispersion (ND) or Mass-Balance (MB)	ND	ND	---	MODEL
R014	Well pumping rate (m**3/yr)	2.500E+02	2.500E+02	---	UW
R015	Number of unsaturated zone strata	1	1	---	NS
R015	Unsat. zone 1, thickness (m)	4.000E+00	4.000E+00	---	H(1)
R015	Unsat. zone 1, soil density (g/cm**3)	1.500E+00	1.500E+00	---	DENSUZ(1)
R015	Unsat. zone 1, total porosity	4.000E-01	4.000E-01	---	TPUZ(1)
R015	Unsat. zone 1, effective porosity	2.000E-01	2.000E-01	---	EPUZ(1)
R015	Unsat. zone 1, field capacity	2.000E-01	2.000E-01	---	FCUZ(1)
R015	Unsat. zone 1, soil-specific b parameter	5.300E+00	5.300E+00	---	BUZ(1)
R015	Unsat. zone 1, hydraulic conductivity (m/yr)	1.000E+01	1.000E+01	---	HCUZ(1)
R016	Distribution coefficients for Cs-137				
R016	Contaminated zone (cm**3/g)	4.600E+03	4.600E+03	---	DCNUCC(1)
R016	Unsaturated zone 1 (cm**3/g)	4.600E+03	4.600E+03	---	DCNUCU(1,1)
R016	Saturated zone (cm**3/g)	4.600E+03	4.600E+03	---	DCNUCS(1)
R016	Leach rate (/yr)	0.000E+00	0.000E+00	3.623E-05	ALEACH(1)
R016	Solubility constant	0.000E+00	0.000E+00	not used	SOLUBK(1)
R016	Distribution coefficients for Pb-210				
R016	Contaminated zone (cm**3/g)	1.000E+02	1.000E+02	---	DCNUCC(2)
R016	Unsaturated zone 1 (cm**3/g)	1.000E+02	1.000E+02	---	DCNUCU(2,1)
R016	Saturated zone (cm**3/g)	1.000E+02	1.000E+02	---	DCNUCS(2)
R016	Leach rate (/yr)	0.000E+00	0.000E+00	1.663E-03	ALEACH(2)
R016	Solubility constant	0.000E+00	0.000E+00	not used	SOLUBK(2)
R016	Distribution coefficients for Ra-226				
R016	Contaminated zone (cm**3/g)	7.000E+01	7.000E+01	---	DCNUCC(3)
R016	Unsaturated zone 1 (cm**3/g)	7.000E+01	7.000E+01	---	DCNUCU(3,1)
R016	Saturated zone (cm**3/g)	7.000E+01	7.000E+01	---	DCNUCS(3)
R016	Leach rate (/yr)	0.000E+00	0.000E+00	2.374E-03	ALEACH(3)
R016	Solubility constant	0.000E+00	0.000E+00	not used	SOLUBK(3)
R016	Distribution coefficients for Sr-90				
R016	Contaminated zone (cm**3/g)	3.000E+01	3.000E+01	---	DCNUCC(4)
R016	Unsaturated zone 1 (cm**3/g)	3.000E+01	3.000E+01	---	DCNUCU(4,1)
R016	Saturated zone (cm**3/g)	3.000E+01	3.000E+01	---	DCNUCS(4)
R016	Leach rate (/yr)	0.000E+00	0.000E+00	5.516E-03	ALEACH(4)
R016	Solubility constant	0.000E+00	0.000E+00	not used	SOLUBK(4)
R017	Inhalation rate (m**3/yr)	8.400E+03	8.400E+03	---	INHALR
R017	Mass loading for inhalation (g/m**3)	1.000E-04	1.000E-04	---	MLINH
R017	Exposure duration	3.000E+01	3.000E+01	---	ED
R017	Shielding factor, inhalation	4.000E-01	4.000E-01	---	SHF3
R017	Shielding factor, external gamma	7.000E-01	7.000E-01	---	SHF1
R017	Fraction of time spent indoors	5.000E-01	5.000E-01	---	FIND
R017	Fraction of time spent outdoors (on site)	2.500E-01	2.500E-01	---	FOTD

Site-Specific Parameter Summary (continued)

Menu	Parameter	User Input	Default	Used by RESRAD (If different from user input)	Parameter Name
R017	Shape factor flag, external gamma	1.000E+00	1.000E+00	>0 shows circular AREA.	FS
R017	Radii of shape factor array (used if FS = -1):				
R017	Outer annular radius (m), ring 1:	not used	5.000E+01	---	RAD_SHAPE(1)
R017	Outer annular radius (m), ring 2:	not used	7.071E+01	---	RAD_SHAPE(2)
R017	Outer annular radius (m), ring 3:	not used	0.000E+00	---	RAD_SHAPE(3)
R017	Outer annular radius (m), ring 4:	not used	0.000E+00	---	RAD_SHAPE(4)
R017	Outer annular radius (m), ring 5:	not used	0.000E+00	---	RAD_SHAPE(5)
R017	Outer annular radius (m), ring 6:	not used	0.000E+00	---	RAD_SHAPE(6)
R017	Outer annular radius (m), ring 7:	not used	0.000E+00	---	RAD_SHAPE(7)
R017	Outer annular radius (m), ring 8:	not used	0.000E+00	---	RAD_SHAPE(8)
R017	Outer annular radius (m), ring 9:	not used	0.000E+00	---	RAD_SHAPE(9)
R017	Outer annular radius (m), ring 10:	not used	0.000E+00	---	RAD_SHAPE(10)
R017	Outer annular radius (m), ring 11:	not used	0.000E+00	---	RAD_SHAPE(11)
R017	Outer annular radius (m), ring 12:	not used	0.000E+00	---	RAD_SHAPE(12)
R017	Fractions of annular areas within AREA:				
R017	Ring 1	not used	1.000E+00	---	FRACA(1)
R017	Ring 2	not used	2.732E-01	---	FRACA(2)
R017	Ring 3	not used	0.000E+00	---	FRACA(3)
R017	Ring 4	not used	0.000E+00	---	FRACA(4)
R017	Ring 5	not used	0.000E+00	---	FRACA(5)
R017	Ring 6	not used	0.000E+00	---	FRACA(6)
R017	Ring 7	not used	0.000E+00	---	FRACA(7)
R017	Ring 8	not used	0.000E+00	---	FRACA(8)
R017	Ring 9	not used	0.000E+00	---	FRACA(9)
R017	Ring 10	not used	0.000E+00	---	FRACA(10)
R017	Ring 11	not used	0.000E+00	---	FRACA(11)
R017	Ring 12	not used	0.000E+00	---	FRACA(12)
R018	Fruits, vegetables and grain consumption (kg/yr)	1.600E+02	1.600E+02	---	DIET(1)
R018	Leafy vegetable consumption (kg/yr)	1.400E+01	1.400E+01	---	DIET(2)
R018	Milk consumption (L/yr)	9.200E+01	9.200E+01	---	DIET(3)
R018	Meat and poultry consumption (kg/yr)	6.300E+01	6.300E+01	---	DIET(4)
R018	Fish consumption (kg/yr)	5.400E+00	5.400E+00	---	DIET(5)
R018	Other seafood consumption (kg/yr)	9.000E-01	9.000E-01	---	DIET(6)
R018	Soil ingestion rate (g/yr)	3.650E+01	3.650E+01	---	SOIL
R018	Drinking water intake (L/yr)	5.100E+02	5.100E+02	---	DWI
R018	Contamination fraction of drinking water	1.000E+00	1.000E+00	---	FDW
R018	Contamination fraction of household water	not used	1.000E+00	---	FHHW
R018	Contamination fraction of livestock water	1.000E+00	1.000E+00	---	FLW
R018	Contamination fraction of irrigation water	1.000E+00	1.000E+00	---	FIRW
R018	Contamination fraction of aquatic food	5.000E-01	5.000E-01	---	FR9
R018	Contamination fraction of plant food	-1	-1	0.157E+00	FPLANT
R018	Contamination fraction of meat	-1	-1	0.157E-01	FMEAT
R018	Contamination fraction of milk	-1	-1	0.157E-01	FMILK
R019	Livestock fodder intake for meat (kg/day)	6.800E+01	6.800E+01	---	LFI5
R019	Livestock fodder intake for milk (kg/day)	5.500E+01	5.500E+01	---	LFI6
R019	Livestock water intake for meat (L/day)	5.000E+01	5.000E+01	---	LWI5
R019	Livestock water intake for milk (L/day)	1.600E+02	1.600E+02	---	LWI6

Site-Specific Parameter Summary (continued)

Menu	Parameter	User Input	Default	Used by RESRAD (If different from user input)	Parameter Name
R019	Livestock soil intake (kg/day)	5.000E-01	5.000E-01	---	LSI
R019	Mass loading for foliar deposition (g/m**3)	1.000E-04	1.000E-04	---	MLFD
R019	Depth of soil mixing layer (m)	1.500E-01	1.500E-01	---	DM
R019	Depth of roots (m)	9.000E-01	9.000E-01	---	DROOT
R019	Drinking water fraction from ground water	1.000E+00	1.000E+00	---	FGWDW
R019	Household water fraction from ground water	not used	1.000E+00	---	FGWHH
R019	Livestock water fraction from ground water	1.000E+00	1.000E+00	---	FGWLW
R019	Irrigation fraction from ground water	1.000E+00	1.000E+00	---	FGWIR
R19B	Wet weight crop yield for Non-Leafy (kg/m**2)	7.000E-01	7.000E-01	---	YV(1)
R19B	Wet weight crop yield for Leafy (kg/m**2)	1.500E+00	1.500E+00	---	YV(2)
R19B	Wet weight crop yield for Fodder (kg/m**2)	1.100E+00	1.100E+00	---	YV(3)
R19B	Growing Season for Non-Leafy (years)	1.700E-01	1.700E-01	---	TE(1)
R19B	Growing Season for Leafy (years)	2.500E-01	2.500E-01	---	TE(2)
R19B	Growing Season for Fodder (years)	8.000E-02	8.000E-02	---	TE(3)
R19B	Translocation Factor for Non-Leafy	1.000E-01	1.000E-01	---	TIV(1)
R19B	Translocation Factor for Leafy	1.000E+00	1.000E+00	---	TIV(2)
R19B	Translocation Factor for Fodder	1.000E+00	1.000E+00	---	TIV(3)
R19B	Dry Foliar Interception Fraction for Non-Leafy	2.500E-01	2.500E-01	---	RDRY(1)
R19B	Dry Foliar Interception Fraction for Leafy	2.500E-01	2.500E-01	---	RDRY(2)
R19B	Dry Foliar Interception Fraction for Fodder	2.500E-01	2.500E-01	---	RDRY(3)
R19B	Wet Foliar Interception Fraction for Non-Leafy	2.500E-01	2.500E-01	---	RWET(1)
R19B	Wet Foliar Interception Fraction for Leafy	2.500E-01	2.500E-01	---	RWET(2)
R19B	Wet Foliar Interception Fraction for Fodder	2.500E-01	2.500E-01	---	RWET(3)
R19B	Weathering Removal Constant for Vegetation	2.000E+01	2.000E+01	---	WLAM
C14	C-12 concentration in water (g/cm**3)	not used	2.000E-05	---	C12WTR
C14	C-12 concentration in contaminated soil (g/g)	not used	3.000E-02	---	C12CZ
C14	Fraction of vegetation carbon from soil	not used	2.000E-02	---	CSOIL
C14	Fraction of vegetation carbon from air	not used	9.800E-01	---	CAIR
C14	C-14 evasion layer thickness in soil (m)	not used	3.000E-01	---	DMC
C14	C-14 evasion flux rate from soil (1/sec)	not used	7.000E-07	---	EVSN
C14	C-12 evasion flux rate from soil (1/sec)	not used	1.000E-10	---	REVSN
C14	Fraction of grain in beef cattle feed	not used	8.000E-01	---	AVFG4
C14	Fraction of grain in milk cow feed	not used	2.000E-01	---	AVFG5
STOR	Storage times of contaminated foodstuffs (days):				
STOR	Fruits, non-leafy vegetables, and grain	1.400E+01	1.400E+01	---	STOR_T(1)
STOR	Leafy vegetables	1.000E+00	1.000E+00	---	STOR_T(2)
STOR	Milk	1.000E+00	1.000E+00	---	STOR_T(3)
STOR	Meat and poultry	2.000E+01	2.000E+01	---	STOR_T(4)
STOR	Fish	7.000E+00	7.000E+00	---	STOR_T(5)
STOR	Crustacea and mollusks	7.000E+00	7.000E+00	---	STOR_T(6)
STOR	Well water	1.000E+00	1.000E+00	---	STOR_T(7)
STOR	Surface water	1.000E+00	1.000E+00	---	STOR_T(8)
STOR	Livestock fodder	4.500E+01	4.500E+01	---	STOR_T(9)
R021	Thickness of building foundation (m)	not used	1.500E-01	---	FLOOR1
R021	Bulk density of building foundation (g/cm**3)	not used	2.400E+00	---	DENSFL
R021	Total porosity of the cover material	not used	4.000E-01	---	TPCV

Site-Specific Parameter Summary (continued)

Menu	Parameter	User Input	Default	Used by RESRAD (If different from user input)	Parameter Name
R021	Total porosity of the building foundation	not used	1.000E-01	---	TPFL
R021	Volumetric water content of the cover material	not used	5.000E-02	---	PH2OCV
R021	Volumetric water content of the foundation	not used	3.000E-02	---	PH2OFL
R021	Diffusion coefficient for radon gas (m/sec):				
R021	in cover material	not used	2.000E-06	---	DIFCV
R021	in foundation material	not used	3.000E-07	---	DIFFL
R021	in contaminated zone soil	not used	2.000E-06	---	DIFCZ
R021	Radon vertical dimension of mixing (m)	not used	2.000E+00	---	HMIX
R021	Average building air exchange rate (1/hr)	not used	5.000E-01	---	REXG
R021	Height of the building (room) (m)	not used	2.500E+00	---	HRM
R021	Building interior area factor	not used	0.000E+00	---	FAI
R021	Building depth below ground surface (m)	not used	-1.000E+00	---	DMFL
R021	Emanating power of Rn-222 gas	not used	2.500E-01	---	EMANA(1)
R021	Emanating power of Rn-220 gas	not used	1.500E-01	---	EMANA(2)
TITL	Number of graphical time points	32	---	---	NPTS
TITL	Maximum number of integration points for dose	17	---	---	LYMAX
TITL	Maximum number of integration points for risk	257	---	---	KYMAX

Summary of Pathway Selections

Pathway	User Selection
1 -- external gamma	active
2 -- inhalation (w/o radon)	active
3 -- plant ingestion	active
4 -- meat ingestion	active
5 -- milk ingestion	active
6 -- aquatic foods	active
7 -- drinking water	active
8 -- soil ingestion	active
9 -- radon	suppressed
Find peak pathway doses	suppressed

Contaminated Zone Dimensions		Initial Soil Concentrations, pCi/g	
Area:	314.00 square meters	Cs-137	5.300E-02
Thickness:	2.00 meters	Pb-210	3.730E-01
Cover Depth:	0.00 meters	Ra-226	3.730E-01
		Sr-90	7.000E-02

Total Dose TDOSE(t), mrem/yr
Basic Radiation Dose Limit = 2.500E+01 mrem/yr
Total Mixture Sum M(t) = Fraction of Basic Dose Limit Received at Time (t)

t (years):	0.000E+00	1.000E+00	3.000E+00	1.000E+01	3.000E+01	1.000E+02	3.000E+02	1.000E+03
TDOSE(t):	3.643E+00	3.630E+00	3.603E+00	3.513E+00	3.280E+00	2.648E+00	1.503E+00	9.214E-01
M(t):	1.457E-01	1.452E-01	1.441E-01	1.405E-01	1.312E-01	1.059E-01	6.012E-02	3.686E-02

Maximum TDOSE(t): 3.643E+00 mrem/yr at t = 0.000E+00 years

Total Dose Contributions TDOSE(i,p,t) for Individual Radionuclides (i) and Pathways (p)
As mrem/yr and Fraction of Total Dose At t = 0.000E+00 years

Water Independent Pathways (Inhalation excludes radon)

Radio-	Ground		Inhalation		Radon		Plant		Meat		Milk		Soil	
Nuclide	mrem/yr	fract.	mrem/yr	fract.	mrem/yr	fract.	mrem/yr	fract.	mrem/yr	fract.	mrem/yr	fract.	mrem/yr	fract.
Cs-137	9.118E-02	0.0250	7.456E-08	0.0000	0.000E+00	0.0000	2.863E-03	0.0008	2.503E-04	0.0001	8.173E-05	0.0000	2.252E-05	0.0000
Pb-210	1.179E-03	0.0003	3.797E-04	0.0001	0.000E+00	0.0000	7.295E-01	0.2003	2.494E-03	0.0007	1.215E-03	0.0003	2.295E-02	0.0063
Ra-226	2.142E+00	0.5879	1.487E-04	0.0000	0.000E+00	0.0000	5.512E-01	0.1513	1.630E-03	0.0004	1.945E-03	0.0005	4.587E-03	0.0013
Sr-90	8.699E-04	0.0002	4.027E-06	0.0000	0.000E+00	0.0000	8.640E-02	0.0237	1.745E-03	0.0005	5.180E-04	0.0001	9.061E-05	0.0000
Total	2.235E+00	0.6135	5.325E-04	0.0001	0.000E+00	0.0000	1.370E+00	0.3761	6.119E-03	0.0017	3.760E-03	0.0010	2.765E-02	0.0076

Total Dose Contributions TDOSE(i,p,t) for Individual Radionuclides (i) and Pathways (p)
As mrem/yr and Fraction of Total Dose At t = 0.000E+00 years

Water Dependent Pathways

Radio-	Water		Fish		Radon		Plant		Meat		Milk		All Pathways*	
Nuclide	mrem/yr	fract.	mrem/yr	fract.	mrem/yr	fract.	mrem/yr	fract.	mrem/yr	fract.	mrem/yr	fract.	mrem/yr	fract.
Cs-137	0.000E+00	0.0000	0.000E+00	0.0000	0.000E+00	0.0000	0.000E+00	0.0000	0.000E+00	0.0000	0.000E+00	0.0000	9.440E-02	0.0259
Pb-210	0.000E+00	0.0000	0.000E+00	0.0000	0.000E+00	0.0000	0.000E+00	0.0000	0.000E+00	0.0000	0.000E+00	0.0000	7.577E-01	0.2080
Ra-226	0.000E+00	0.0000	0.000E+00	0.0000	0.000E+00	0.0000	0.000E+00	0.0000	0.000E+00	0.0000	0.000E+00	0.0000	2.701E+00	0.7415
Sr-90	0.000E+00	0.0000	0.000E+00	0.0000	0.000E+00	0.0000	0.000E+00	0.0000	0.000E+00	0.0000	0.000E+00	0.0000	8.963E-02	0.0246
Total	0.000E+00	0.0000	0.000E+00	0.0000	0.000E+00	0.0000	0.000E+00	0.0000	0.000E+00	0.0000	0.000E+00	0.0000	3.643E+00	1.0000

*Sum of all water independent and dependent pathways.

Total Dose Contributions TDOSE(i,p,t) for Individual Radionuclides (i) and Pathways (p)
As mrem/yr and Fraction of Total Dose At t = 1.000E+00 years

Water Independent Pathways (Inhalation excludes radon)

Radio-	Ground		Inhalation		Radon		Plant		Meat		Milk		Soil	
Nuclide	mrem/yr	fract.	mrem/yr	fract.	mrem/yr	fract.	mrem/yr	fract.	mrem/yr	fract.	mrem/yr	fract.	mrem/yr	fract.
Cs-137	8.909E-02	0.0245	7.285E-08	0.0000	0.000E+00	0.0000	2.797E-03	0.0008	2.446E-04	0.0001	7.986E-05	0.0000	2.200E-05	0.0000
Pb-210	1.141E-03	0.0003	3.675E-04	0.0001	0.000E+00	0.0000	7.060E-01	0.1945	2.414E-03	0.0007	1.176E-03	0.0003	2.221E-02	0.0061
Ra-226	2.136E+00	0.5884	1.599E-04	0.0000	0.000E+00	0.0000	5.723E-01	0.1577	1.705E-03	0.0005	1.978E-03	0.0005	5.275E-03	0.0015
Sr-90	8.448E-04	0.0002	3.910E-06	0.0000	0.000E+00	0.0000	8.391E-02	0.0231	1.694E-03	0.0005	5.030E-04	0.0001	8.799E-05	0.0000
Total	2.227E+00	0.6135	5.314E-04	0.0001	0.000E+00	0.0000	1.365E+00	0.3761	6.058E-03	0.0017	3.737E-03	0.0010	2.760E-02	0.0076

Total Dose Contributions TDOSE(i,p,t) for Individual Radionuclides (i) and Pathways (p)
As mrem/yr and Fraction of Total Dose At t = 1.000E+00 years

Water Dependent Pathways

Radio-	Water		Fish		Radon		Plant		Meat		Milk		All Pathways*	
Nuclide	mrem/yr	fract.	mrem/yr	fract.	mrem/yr	fract.	mrem/yr	fract.	mrem/yr	fract.	mrem/yr	fract.	mrem/yr	fract.
Cs-137	0.000E+00	0.0000	0.000E+00	0.0000	0.000E+00	0.0000	0.000E+00	0.0000	0.000E+00	0.0000	0.000E+00	0.0000	9.224E-02	0.0254
Pb-210	0.000E+00	0.0000	0.000E+00	0.0000	0.000E+00	0.0000	0.000E+00	0.0000	0.000E+00	0.0000	0.000E+00	0.0000	7.333E-01	0.2020
Ra-226	0.000E+00	0.0000	0.000E+00	0.0000	0.000E+00	0.0000	0.000E+00	0.0000	0.000E+00	0.0000	0.000E+00	0.0000	2.717E+00	0.7486
Sr-90	0.000E+00	0.0000	0.000E+00	0.0000	0.000E+00	0.0000	0.000E+00	0.0000	0.000E+00	0.0000	0.000E+00	0.0000	8.704E-02	0.0240
Total	0.000E+00	0.0000	0.000E+00	0.0000	0.000E+00	0.0000	0.000E+00	0.0000	0.000E+00	0.0000	0.000E+00	0.0000	3.630E+00	1.0000

*Sum of all water independent and dependent pathways.

Total Dose Contributions TDOSE(i,p,t) for Individual Radionuclides (i) and Pathways (p)
As mrem/yr and Fraction of Total Dose At t = 3.000E+00 years

Water Independent Pathways (Inhalation excludes radon)

Radio-	Ground		Inhalation		Radon		Plant		Meat		Milk		Soil	
Nuclide	mrem/yr	fract.	mrem/yr	fract.	mrem/yr	fract.	mrem/yr	fract.	mrem/yr	fract.	mrem/yr	fract.	mrem/yr	fract.
Cs-137	8.506E-02	0.0236	6.956E-08	0.0000	0.000E+00	0.0000	2.671E-03	0.0007	2.335E-04	0.0001	7.625E-05	0.0000	2.101E-05	0.0000
Pb-210	1.069E-03	0.0003	3.442E-04	0.0001	0.000E+00	0.0000	6.613E-01	0.1835	2.261E-03	0.0006	1.102E-03	0.0003	2.080E-02	0.0058
Ra-226	2.124E+00	0.5895	1.811E-04	0.0001	0.000E+00	0.0000	6.114E-01	0.1697	1.841E-03	0.0005	2.038E-03	0.0006	6.579E-03	0.0018
Sr-90	7.967E-04	0.0002	3.687E-06	0.0000	0.000E+00	0.0000	7.913E-02	0.0220	1.598E-03	0.0004	4.744E-04	0.0001	8.298E-05	0.0000
Total	2.211E+00	0.6136	5.290E-04	0.0001	0.000E+00	0.0000	1.354E+00	0.3759	5.933E-03	0.0016	3.690E-03	0.0010	2.749E-02	0.0076

Total Dose Contributions TDOSE(i,p,t) for Individual Radionuclides (i) and Pathways (p)
As mrem/yr and Fraction of Total Dose At t = 3.000E+00 years

Water Dependent Pathways

Radio-	Water		Fish		Radon		Plant		Meat		Milk		All Pathways*	
Nuclide	mrem/yr	fract.	mrem/yr	fract.	mrem/yr	fract.	mrem/yr	fract.	mrem/yr	fract.	mrem/yr	fract.	mrem/yr	fract.
Cs-137	0.000E+00	0.0000	0.000E+00	0.0000	0.000E+00	0.0000	0.000E+00	0.0000	0.000E+00	0.0000	0.000E+00	0.0000	8.807E-02	0.0244
Pb-210	0.000E+00	0.0000	0.000E+00	0.0000	0.000E+00	0.0000	0.000E+00	0.0000	0.000E+00	0.0000	0.000E+00	0.0000	6.869E-01	0.1906
Ra-226	0.000E+00	0.0000	0.000E+00	0.0000	0.000E+00	0.0000	0.000E+00	0.0000	0.000E+00	0.0000	0.000E+00	0.0000	2.746E+00	0.7621
Sr-90	0.000E+00	0.0000	0.000E+00	0.0000	0.000E+00	0.0000	0.000E+00	0.0000	0.000E+00	0.0000	0.000E+00	0.0000	8.208E-02	0.0228
Total	0.000E+00	0.0000	0.000E+00	0.0000	0.000E+00	0.0000	0.000E+00	0.0000	0.000E+00	0.0000	0.000E+00	0.0000	3.603E+00	1.0000

*Sum of all water independent and dependent pathways.

Total Dose Contributions TDOSE(i,p,t) for Individual Radionuclides (i) and Pathways (p)
As mrem/yr and Fraction of Total Dose At t = 1.000E+01 years

Water Independent Pathways (Inhalation excludes radon)

Radio-	Ground		Inhalation		Radon		Plant		Meat		Milk		Soil	
Nuclide	mrem/yr	fract.	mrem/yr	fract.	mrem/yr	fract.	mrem/yr	fract.	mrem/yr	fract.	mrem/yr	fract.	mrem/yr	fract.
Cs-137	7.234E-02	0.0206	5.915E-08	0.0000	0.000E+00	0.0000	2.271E-03	0.0006	1.986E-04	0.0001	6.485E-05	0.0000	1.787E-05	0.0000
Pb-210	8.496E-04	0.0002	2.737E-04	0.0001	0.000E+00	0.0000	5.258E-01	0.1497	1.798E-03	0.0005	8.759E-04	0.0002	1.654E-02	0.0047
Ra-226	2.083E+00	0.5929	2.438E-04	0.0001	0.000E+00	0.0000	7.268E-01	0.2069	2.240E-03	0.0006	2.210E-03	0.0006	1.046E-02	0.0030
Sr-90	6.489E-04	0.0002	3.003E-06	0.0000	0.000E+00	0.0000	6.445E-02	0.0183	1.301E-03	0.0004	3.864E-04	0.0001	6.758E-05	0.0000
Total	2.157E+00	0.6140	5.205E-04	0.0001	0.000E+00	0.0000	1.319E+00	0.3756	5.538E-03	0.0016	3.537E-03	0.0010	2.708E-02	0.0077

Total Dose Contributions TDOSE(i,p,t) for Individual Radionuclides (i) and Pathways (p)
As mrem/yr and Fraction of Total Dose At t = 1.000E+01 years

Water Dependent Pathways

Radio-	Water		Fish		Radon		Plant		Meat		Milk		All Pathways*	
Nuclide	mrem/yr	fract.	mrem/yr	fract.	mrem/yr	fract.	mrem/yr	fract.	mrem/yr	fract.	mrem/yr	fract.	mrem/yr	fract.
Cs-137	0.000E+00	0.0000	0.000E+00	0.0000	0.000E+00	0.0000	0.000E+00	0.0000	0.000E+00	0.0000	0.000E+00	0.0000	7.490E-02	0.0213
Pb-210	0.000E+00	0.0000	0.000E+00	0.0000	0.000E+00	0.0000	0.000E+00	0.0000	0.000E+00	0.0000	0.000E+00	0.0000	5.462E-01	0.1555
Ra-226	0.000E+00	0.0000	0.000E+00	0.0000	0.000E+00	0.0000	0.000E+00	0.0000	0.000E+00	0.0000	0.000E+00	0.0000	2.825E+00	0.8042
Sr-90	0.000E+00	0.0000	0.000E+00	0.0000	0.000E+00	0.0000	0.000E+00	0.0000	0.000E+00	0.0000	0.000E+00	0.0000	6.685E-02	0.0190
Total	0.000E+00	0.0000	0.000E+00	0.0000	0.000E+00	0.0000	0.000E+00	0.0000	0.000E+00	0.0000	0.000E+00	0.0000	3.513E+00	1.0000

*Sum of all water independent and dependent pathways.

Total Dose Contributions TDOSE(i,p,t) for Individual Radionuclides (i) and Pathways (p)
As mrem/yr and Fraction of Total Dose At t = 3.000E+01 years

Water Independent Pathways (Inhalation excludes radon)

Radio-	Ground		Inhalation		Radon		Plant		Meat		Milk		Soil	
Nuclide	mrem/yr	fract.	mrem/yr	fract.	mrem/yr	fract.	mrem/yr	fract.	mrem/yr	fract.	mrem/yr	fract.	mrem/yr	fract.
Cs-137	4.554E-02	0.0139	3.724E-08	0.0000	0.000E+00	0.0000	1.430E-03	0.0004	1.250E-04	0.0000	4.082E-05	0.0000	1.125E-05	0.0000
Pb-210	4.414E-04	0.0001	1.422E-04	0.0000	0.000E+00	0.0000	2.732E-01	0.0833	9.339E-04	0.0003	4.550E-04	0.0001	8.594E-03	0.0026
Ra-226	1.969E+00	0.6004	3.515E-04	0.0001	0.000E+00	0.0000	9.196E-01	0.2804	2.913E-03	0.0009	2.477E-03	0.0008	1.720E-02	0.0052
Sr-90	3.610E-04	0.0001	1.671E-06	0.0000	0.000E+00	0.0000	3.585E-02	0.0109	7.241E-04	0.0002	2.150E-04	0.0001	3.760E-05	0.0000
Total	2.016E+00	0.6145	4.954E-04	0.0002	0.000E+00	0.0000	1.230E+00	0.3750	4.695E-03	0.0014	3.188E-03	0.0010	2.584E-02	0.0079

Total Dose Contributions TDOSE(i,p,t) for Individual Radionuclides (i) and Pathways (p)
As mrem/yr and Fraction of Total Dose At t = 3.000E+01 years

Water Dependent Pathways

Radio-	Water		Fish		Radon		Plant		Meat		Milk		All Pathways*	
Nuclide	mrem/yr	fract.	mrem/yr	fract.	mrem/yr	fract.	mrem/yr	fract.	mrem/yr	fract.	mrem/yr	fract.	mrem/yr	fract.
Cs-137	0.000E+00	0.0000	0.000E+00	0.0000	0.000E+00	0.0000	0.000E+00	0.0000	0.000E+00	0.0000	0.000E+00	0.0000	4.715E-02	0.0144
Pb-210	0.000E+00	0.0000	0.000E+00	0.0000	0.000E+00	0.0000	0.000E+00	0.0000	0.000E+00	0.0000	0.000E+00	0.0000	2.837E-01	0.0865
Ra-226	0.000E+00	0.0000	0.000E+00	0.0000	0.000E+00	0.0000	0.000E+00	0.0000	0.000E+00	0.0000	0.000E+00	0.0000	2.912E+00	0.8878
Sr-90	0.000E+00	0.0000	0.000E+00	0.0000	0.000E+00	0.0000	0.000E+00	0.0000	0.000E+00	0.0000	0.000E+00	0.0000	3.719E-02	0.0113
Total	0.000E+00	0.0000	0.000E+00	0.0000	0.000E+00	0.0000	0.000E+00	0.0000	0.000E+00	0.0000	0.000E+00	0.0000	3.280E+00	1.0000

*Sum of all water independent and dependent pathways.

Total Dose Contributions TDOSE(i,p,t) for Individual Radionuclides (i) and Pathways (p)
As mrem/yr and Fraction of Total Dose At t = 1.000E+02 years

Water Independent Pathways (Inhalation excludes radon)

Radio-	Ground		Inhalation		Radon		Plant		Meat		Milk		Soil	
Nuclide	mrem/yr	fract.	mrem/yr	fract.	mrem/yr	fract.	mrem/yr	fract.	mrem/yr	fract.	mrem/yr	fract.	mrem/yr	fract.
Cs-137	9.013E-03	0.0034	7.370E-09	0.0000	0.000E+00	0.0000	2.830E-04	0.0001	2.474E-05	0.0000	8.080E-06	0.0000	2.226E-06	0.0000
Pb-210	4.460E-05	0.0000	1.437E-05	0.0000	0.000E+00	0.0000	2.760E-02	0.0104	9.436E-05	0.0000	4.597E-05	0.0000	8.683E-04	0.0003
Ra-226	1.618E+00	0.6113	3.952E-04	0.0001	0.000E+00	0.0000	9.599E-01	0.3626	3.092E-03	0.0012	2.375E-03	0.0009	2.056E-02	0.0078
Sr-90	4.636E-05	0.0000	2.146E-07	0.0000	0.000E+00	0.0000	4.605E-03	0.0017	9.299E-05	0.0000	2.761E-05	0.0000	4.829E-06	0.0000
Total	1.628E+00	0.6147	4.097E-04	0.0002	0.000E+00	0.0000	9.924E-01	0.3748	3.304E-03	0.0012	2.457E-03	0.0009	2.144E-02	0.0081

Total Dose Contributions TDOSE(i,p,t) for Individual Radionuclides (i) and Pathways (p)
As mrem/yr and Fraction of Total Dose At t = 1.000E+02 years

Water Dependent Pathways

Radio-	Water		Fish		Radon		Plant		Meat		Milk		All Pathways*	
Nuclide	mrem/yr	fract.	mrem/yr	fract.	mrem/yr	fract.	mrem/yr	fract.	mrem/yr	fract.	mrem/yr	fract.	mrem/yr	fract.
Cs-137	0.000E+00	0.0000	0.000E+00	0.0000	0.000E+00	0.0000	0.000E+00	0.0000	0.000E+00	0.0000	0.000E+00	0.0000	9.332E-03	0.0035
Pb-210	0.000E+00	0.0000	0.000E+00	0.0000	0.000E+00	0.0000	0.000E+00	0.0000	0.000E+00	0.0000	0.000E+00	0.0000	2.867E-02	0.0108
Ra-226	0.000E+00	0.0000	0.000E+00	0.0000	0.000E+00	0.0000	0.000E+00	0.0000	0.000E+00	0.0000	0.000E+00	0.0000	2.605E+00	0.9838
Sr-90	0.000E+00	0.0000	0.000E+00	0.0000	0.000E+00	0.0000	0.000E+00	0.0000	0.000E+00	0.0000	0.000E+00	0.0000	4.777E-03	0.0018
Total	0.000E+00	0.0000	0.000E+00	0.0000	0.000E+00	0.0000	0.000E+00	0.0000	0.000E+00	0.0000	0.000E+00	0.0000	2.648E+00	1.0000

*Sum of all water independent and dependent pathways.

Total Dose Contributions TDOSE(i,p,t) for Individual Radionuclides (i) and Pathways (p)
As mrem/yr and Fraction of Total Dose At t = 3.000E+02 years

Water Independent Pathways (Inhalation excludes radon)

Radio-	Ground		Inhalation		Radon		Plant		Meat		Milk		Soil	
Nuclide	mrem/yr	fract.	mrem/yr	fract.	mrem/yr	fract.	mrem/yr	fract.	mrem/yr	fract.	mrem/yr	fract.	mrem/yr	fract.
Cs-137	8.808E-05	0.0001	7.202E-11	0.0000	0.000E+00	0.0000	2.765E-06	0.0000	2.418E-07	0.0000	7.896E-08	0.0000	2.175E-08	0.0000
Pb-210	6.383E-08	0.0000	2.056E-08	0.0000	0.000E+00	0.0000	3.950E-05	0.0000	1.351E-07	0.0000	6.580E-08	0.0000	1.243E-06	0.0000
Ra-226	9.232E-01	0.6143	2.339E-04	0.0002	0.000E+00	0.0000	5.639E-01	0.3752	1.819E-03	0.0012	1.382E-03	0.0009	1.224E-02	0.0081
Sr-90	1.317E-07	0.0000	6.095E-10	0.0000	0.000E+00	0.0000	1.308E-05	0.0000	2.641E-07	0.0000	7.841E-08	0.0000	1.371E-08	0.0000
Total	9.233E-01	0.6143	2.339E-04	0.0002	0.000E+00	0.0000	5.639E-01	0.3752	1.820E-03	0.0012	1.382E-03	0.0009	1.224E-02	0.0081

Total Dose Contributions TDOSE(i,p,t) for Individual Radionuclides (i) and Pathways (p)
As mrem/yr and Fraction of Total Dose At t = 3.000E+02 years

Water Dependent Pathways

Radio-	Water		Fish		Radon		Plant		Meat		Milk		All Pathways*	
Nuclide	mrem/yr	fract.	mrem/yr	fract.	mrem/yr	fract.	mrem/yr	fract.	mrem/yr	fract.	mrem/yr	fract.	mrem/yr	fract.
Cs-137	0.000E+00	0.0000	0.000E+00	0.0000	0.000E+00	0.0000	0.000E+00	0.0000	0.000E+00	0.0000	0.000E+00	0.0000	9.119E-05	0.0001
Pb-210	0.000E+00	0.0000	0.000E+00	0.0000	0.000E+00	0.0000	0.000E+00	0.0000	0.000E+00	0.0000	0.000E+00	0.0000	4.103E-05	0.0000
Ra-226	0.000E+00	0.0000	0.000E+00	0.0000	0.000E+00	0.0000	0.000E+00	0.0000	0.000E+00	0.0000	0.000E+00	0.0000	1.503E+00	0.9999
Sr-90	6.109E-06	0.0000	3.099E-09	0.0000	0.000E+00	0.0000	1.590E-07	0.0000	1.652E-08	0.0000	9.016E-09	0.0000	1.986E-05	0.0000
Total	6.109E-06	0.0000	3.099E-09	0.0000	0.000E+00	0.0000	1.590E-07	0.0000	1.652E-08	0.0000	9.016E-09	0.0000	1.503E+00	1.0000

*Sum of all water independent and dependent pathways.

Total Dose Contributions TDOSE(i,p,t) for Individual Radionuclides (i) and Pathways (p)
As mrem/yr and Fraction of Total Dose At t = 1.000E+03 years

Water Independent Pathways (Inhalation excludes radon)

Radio-	Ground		Inhalation		Radon		Plant		Meat		Milk		Soil	
Nuclide	mrem/yr	fract.	mrem/yr	fract.	mrem/yr	fract.	mrem/yr	fract.	mrem/yr	fract.	mrem/yr	fract.	mrem/yr	fract.
Cs-137	8.125E-12	0.0000	6.644E-18	0.0000	0.000E+00	0.0000	2.551E-13	0.0000	2.231E-14	0.0000	7.283E-15	0.0000	2.007E-15	0.0000
Pb-210	7.080E-18	0.0000	2.281E-18	0.0000	0.000E+00	0.0000	4.382E-15	0.0000	1.498E-17	0.0000	7.299E-18	0.0000	1.379E-16	0.0000
Ra-226	1.294E-01	0.1405	3.279E-05	0.0000	0.000E+00	0.0000	7.905E-02	0.0858	2.550E-04	0.0003	1.937E-04	0.0002	1.716E-03	0.0019
Sr-90	1.608E-16	0.0000	7.442E-19	0.0000	0.000E+00	0.0000	1.597E-14	0.0000	3.225E-16	0.0000	9.574E-17	0.0000	1.675E-17	0.0000
Total	1.294E-01	0.1405	3.279E-05	0.0000	0.000E+00	0.0000	7.905E-02	0.0858	2.550E-04	0.0003	1.937E-04	0.0002	1.716E-03	0.0019

Total Dose Contributions TDOSE(i,p,t) for Individual Radionuclides (i) and Pathways (p)
As mrem/yr and Fraction of Total Dose At t = 1.000E+03 years

Water Dependent Pathways

Radio-	Water		Fish		Radon		Plant		Meat		Milk		All Pathways*	
Nuclide	mrem/yr	fract.	mrem/yr	fract.	mrem/yr	fract.	mrem/yr	fract.	mrem/yr	fract.	mrem/yr	fract.	mrem/yr	fract.
Cs-137	0.000E+00	0.0000	0.000E+00	0.0000	0.000E+00	0.0000	0.000E+00	0.0000	0.000E+00	0.0000	0.000E+00	0.0000	8.412E-12	0.0000
Pb-210	1.382E-14	0.0000	2.896E-17	0.0000	0.000E+00	0.0000	3.344E-16	0.0000	3.716E-18	0.0000	3.050E-18	0.0000	1.874E-14	0.0000
Ra-226	6.923E-01	0.7513	1.239E-03	0.0013	0.000E+00	0.0000	1.679E-02	0.0182	1.962E-04	0.0002	2.261E-04	0.0002	9.214E-01	1.0000
Sr-90	9.954E-14	0.0000	5.051E-17	0.0000	0.000E+00	0.0000	2.591E-15	0.0000	2.696E-16	0.0000	1.470E-16	0.0000	1.192E-13	0.0000
Total	6.923E-01	0.7513	1.239E-03	0.0013	0.000E+00	0.0000	1.679E-02	0.0182	1.962E-04	0.0002	2.261E-04	0.0002	9.214E-01	1.0000

*Sum of all water independent and dependent pathways.

Dose/Source Ratios Summed Over All Pathways
Parent and Progeny Principal Radionuclide Contributions Indicated

Parent (i)	Product (j)	Thread Fraction	DSR(j,t) At Time in Years (mrem/yr)/(pCi/g) 0.000E+00	1.000E+00	3.000E+00	1.000E+01	3.000E+01	1.000E+02	3.000E+02	1.000E+03
Cs-137+D	Cs-137+D	1.000E+00	1.781E+00	1.740E+00	1.662E+00	1.413E+00	8.896E-01	1.761E-01	1.721E-03	1.587E-10
Pb-210+D	Pb-210+D	1.000E+00	2.031E+00	1.966E+00	1.841E+00	1.464E+00	7.606E-01	7.686E-02	1.100E-04	5.024E-14
Ra-226+D	Ra-226+D	1.000E+00	7.204E+00	7.184E+00	7.144E+00	7.005E+00	6.622E+00	5.441E+00	3.104E+00	8.260E-01
Ra-226+D	Pb-210+D	1.000E+00	3.740E-02	1.003E-01	2.177E-01	5.679E-01	1.184E+00	1.542E+00	9.251E-01	1.644E+00
Ra-226+D	∑DSR(j)		7.242E+00	7.284E+00	7.362E+00	7.573E+00	7.807E+00	6.983E+00	4.029E+00	2.470E+00
Sr-90+D	Sr-90+D	1.000E+00	1.280E+00	1.243E+00	1.173E+00	9.550E-01	5.313E-01	6.824E-02	2.838E-04	1.702E-12

The DSR includes contributions from associated (half-life ≤ 180 days) daughters.

Single Radionuclide Soil Guidelines G(i,t) in pCi/g
Basic Radiation Dose Limit = 2.500E+01 mrem/yr

Nuclide (i)	t= 0.000E+00	1.000E+00	3.000E+00	1.000E+01	3.000E+01	1.000E+02	3.000E+02	1.000E+03
Cs-137	1.404E+01	1.437E+01	1.505E+01	1.769E+01	2.810E+01	1.420E+02	1.453E+04	1.575E+11
Pb-210	1.231E+01	1.272E+01	1.358E+01	1.707E+01	3.287E+01	3.253E+02	2.273E+05	*7.634E+13
Ra-226	3.452E+00	3.432E+00	3.396E+00	3.301E+00	3.202E+00	3.580E+00	6.205E+00	1.012E+01
Sr-90	1.953E+01	2.011E+01	2.132E+01	2.618E+01	4.705E+01	3.664E+02	8.810E+04	1.469E+13

*At specific activity limit

Summed Dose/Source Ratios DSR(i,t) in (mrem/yr)/(pCi/g)
and Single Radionuclide Soil Guidelines G(i,t) in pCi/g
at tmin = time of minimum single radionuclide soil guideline
and at tmax = time of maximum total dose = 0.000E+00 years

Nuclide (i)	Initial (pCi/g)	tmin (years)	DSR(i,tmin)	G(i,tmin) (pCi/g)	DSR(i,tmax)	G(i,tmax) (pCi/g)
Cs-137	5.300E-02	0.000E+00	1.781E+00	1.404E+01	1.781E+00	1.404E+01
Pb-210	3.730E-01	0.000E+00	2.031E+00	1.231E+01	2.031E+00	1.231E+01
Ra-226	3.730E-01	32.34 ± 0.06	7.809E+00	3.202E+00	7.242E+00	3.452E+00
Sr-90	7.000E-02	0.000E+00	1.280E+00	1.953E+01	1.280E+00	1.953E+01

Individual Nuclide Dose Summed Over All Pathways
Parent Nuclide and Branch Fraction Indicated

Nuclide (j)	Parent (i)	THF(i)	DOSE(j,t), mrem/yr t= 0.000E+00	1.000E+00	3.000E+00	1.000E+01	3.000E+01	1.000E+02	3.000E+02	1.000E+03
Cs-137	Cs-137	1.000E+00	9.440E-02	9.224E-02	8.807E-02	7.490E-02	4.715E-02	9.332E-03	9.119E-05	8.412E-12
Pb-210	Pb-210	1.000E+00	7.577E-01	7.333E-01	6.869E-01	5.462E-01	2.837E-01	2.867E-02	4.103E-05	1.874E-14
Pb-210	Ra-226	1.000E+00	1.395E-02	3.741E-02	8.120E-02	2.118E-01	4.418E-01	5.752E-01	3.450E-01	6.133E-01
Pb-210	∑DOSE(j)		7.717E-01	7.708E-01	7.681E-01	7.580E-01	7.255E-01	6.039E-01	3.451E-01	6.133E-01
Ra-226	Ra-226	1.000E+00	2.687E+00	2.680E+00	2.665E+00	2.613E+00	2.470E+00	2.030E+00	1.158E+00	3.081E-01
Sr-90	Sr-90	1.000E+00	8.963E-02	8.704E-02	8.208E-02	6.685E-02	3.719E-02	4.777E-03	1.986E-05	1.192E-13

THF(i) is the thread fraction of the parent nuclide.

Individual Nuclide Soil Concentration
Parent Nuclide and Branch Fraction Indicated

Nuclide (j)	Parent (i)	THF(i)	S(j,t), pCi/g t= 0.000E+00	1.000E+00	3.000E+00	1.000E+01	3.000E+01	1.000E+02	3.000E+02	1.000E+03
Cs-137	Cs-137	1.000E+00	5.300E-02	5.179E-02	4.945E-02	4.205E-02	2.647E-02	5.239E-03	5.120E-05	4.723E-12
Pb-210	Pb-210	1.000E+00	3.730E-01	3.610E-01	3.381E-01	2.688E-01	1.397E-01	1.411E-02	2.020E-05	2.240E-15
Pb-210	Ra-226	1.000E+00	0.000E+00	1.139E-02	3.299E-02	9.742E-02	2.110E-01	2.778E-01	1.668E-01	2.339E-02
Pb-210	∑S(j):		3.730E-01	3.724E-01	3.711E-01	3.663E-01	3.506E-01	2.919E-01	1.668E-01	2.339E-02
Ra-226	Ra-226	1.000E+00	3.730E-01	3.720E-01	3.699E-01	3.627E-01	3.429E-01	2.817E-01	1.607E-01	2.253E-02
Sr-90	Sr-90	1.000E+00	7.000E-02	6.798E-02	6.411E-02	5.221E-02	2.905E-02	3.731E-03	1.060E-05	1.294E-14

THF(i) is the thread fraction of the parent nuclide.

RESCALC.EXE execution time = 0.51 seconds

Table of Contents

Part III: Intake Quantities and Health Risk Factors

Cancer Risk Slope Factors 2
Risk Slope and ETFG for the Ground Pathway 3
Amount of Intake Quantities and Excess Cancer Risks
Time= 0.000E+00 4
Time= 1.000E+00 7
Time= 3.000E+00 10
Time= 1.000E+01 13
Time= 3.000E+01 16
Time= 1.000E+02 19
Time= 3.000E+02 22
Time= 1.000E+03 25

Cancer Risk Slope Factors Summary Table
Risk Library: FGR 13 Morbidity

Menu	Parameter	Current Value	Base Case*	Parameter Name
Sf-1	Ground external radiation slope factors, 1/yr per (pCi/g):			
Sf-1	Cs-137+D	2.55E-06	5.32E-10	SLPF(1,1)
Sf-1	Pb-210+D	4.21E-09	1.41E-09	SLPF(2,1)
Sf-1	Ra-226+D	8.49E-06	2.29E-08	SLPF(3,1)
Sf-1	Sr-90+D	1.96E-08	4.82E-10	SLPF(4,1)
Sf-2	Inhalation, slope factors, 1/(pCi):			
Sf-2	Cs-137+D	1.12E-10	1.12E-10	SLPF(1,2)
Sf-2	Pb-210+D	3.08E-08	1.58E-08	SLPF(2,2)
Sf-2	Ra-226+D	2.83E-08	2.82E-08	SLPF(3,2)
Sf-2	Sr-90+D	4.33E-10	4.25E-10	SLPF(4,2)
Sf-3	Food ingestion, slope factors, 1/(pCi):			
Sf-3	Cs-137+D	3.74E-11	3.74E-11	SLPF(1,3)
Sf-3	Pb-210+D	3.44E-09	1.18E-09	SLPF(2,3)
Sf-3	Ra-226+D	5.15E-10	5.14E-10	SLPF(3,3)
Sf-3	Sr-90+D	9.53E-11	6.88E-11	SLPF(4,3)
Sf-3	Water ingestion, slope factors, 1/(pCi):			
Sf-3	Cs-137+D	3.04E-11	3.04E-11	SLPF(1,4)
Sf-3	Pb-210+D	2.66E-09	8.81E-10	SLPF(2,4)
Sf-3	Ra-226+D	3.86E-10	3.85E-10	SLPF(3,4)
Sf-3	Sr-90+D	7.40E-11	5.59E-11	SLPF(4,4)
Sf-3	Soil ingestion, slope factors, 1/(pCi):			
Sf-3	Cs-137+D	3.74E-11	3.74E-11	SLPF(1,5)
Sf-3	Pb-210+D	3.44E-09	1.18E-09	SLPF(2,5)
Sf-3	Ra-226+D	5.15E-10	5.14E-10	SLPF(3,5)
Sf-3	Sr-90+D	9.53E-11	6.88E-11	SLPF(4,5)
Sf-Rn	Radon Inhalation slope factors, 1/(pCi):			
Sf-Rn	Rn-222	1.80E-12	1.80E-12	SLPFRN(1,1)
Sf-Rn	Po-218	3.70E-12	3.70E-12	SLPFRN(1,2)
Sf-Rn	Pb-214	6.20E-12	6.20E-12	SLPFRN(1,3)
Sf-Rn	Bi-214	1.50E-11	1.50E-11	SLPFRN(1,4)
Sf-Rn	Radon K factors, (mrem/WLM):			
Sf-Rn	Rn-222 Indoor	7.60E+02	7.60E+02	KFACTR(1,1)
Sf-Rn	Rn-222 Outdoor	5.70E+02	5.70E+02	KFACTR(1,2)

*Base Case means Default.Lib w/o Associate Nuclide contributions.

Risk Slope and Environmental Transport Factors for the Ground Pathway

Nuclide (i)	Slope(i)*	ETFG(i,t) At Time in Years (dimensionless) t= 0.000E+00	1.000E+00	3.000E+00	1.000E+01	3.000E+01	1.000E+02	3.000E+02	1.000E+03
At-218	3.570E-09	5.326E-01	5.326E-01	5.326E-01	5.326E-01	5.326E-01	5.326E-01	5.326E-01	5.326E-01
Ba-137m	2.690E-06	5.101E-01	5.101E-01	5.101E-01	5.101E-01	5.101E-01	5.101E-01	5.101E-01	5.101E-01
Bi-210	2.760E-09	5.212E-01	5.212E-01	5.212E-01	5.212E-01	5.212E-01	5.212E-01	5.212E-01	5.212E-01
Bi-214	7.480E-06	5.131E-01	5.131E-01	5.131E-01	5.131E-01	5.131E-01	5.131E-01	5.131E-01	5.131E-01
Cs-137	5.320E-10	5.290E-01	5.290E-01	5.290E-01	5.290E-01	5.290E-01	5.290E-01	5.290E-01	5.290E-01
Pb-210	1.410E-09	5.338E-01	5.338E-01	5.338E-01	5.338E-01	5.338E-01	5.338E-01	5.338E-01	5.338E-01
Pb-214	9.820E-07	5.210E-01	5.210E-01	5.210E-01	5.210E-01	5.210E-01	5.210E-01	5.210E-01	5.210E-01
Po-210	3.950E-11	5.118E-01	5.118E-01	5.118E-01	5.118E-01	5.118E-01	5.118E-01	5.118E-01	5.118E-01
Po-214	3.860E-10	5.101E-01	5.101E-01	5.101E-01	5.101E-01	5.101E-01	5.101E-01	5.101E-01	5.101E-01
Po-218	4.260E-11	5.118E-01	5.118E-01	5.118E-01	5.118E-01	5.118E-01	5.118E-01	5.118E-01	5.118E-01
Ra-226	2.290E-08	5.317E-01	5.317E-01	5.317E-01	5.317E-01	5.317E-01	5.317E-01	5.317E-01	5.317E-01
Rn-222	1.740E-09	5.109E-01	5.109E-01	5.109E-01	5.109E-01	5.109E-01	5.109E-01	5.109E-01	5.109E-01
Sr-90	4.820E-10	5.315E-01	5.315E-01	5.315E-01	5.315E-01	5.315E-01	5.315E-01	5.315E-01	5.315E-01
Tl-210	0.000E+00	6.000E-01	6.000E-01	6.000E-01	6.000E-01	6.000E-01	6.000E-01	6.000E-01	6.000E-01
Y-90	1.910E-08	5.118E-01	5.118E-01	5.118E-01	5.118E-01	5.118E-01	5.118E-01	5.118E-01	5.118E-01

* - Units are 1/yr per (pCi/g) at infinite depth and area. Multiplication by ETFG(i,t) converts to site conditions.

Amount of Intake Quantities QINT(i,p,t) for Individual Radionuclides (i) and Pathways (p)
As pCi/yr at t= 0.000E+00 years

Radio-	Water Independent Pathways (Inhalation w/o radon)					Water Dependent Pathways					Total
Nuclide	Inhalation	Plant	Meat	Milk	Soil	Water	Fish	Plant	Meat	Milk	Ingestion*
Cs-137	2.364E-03	5.792E+01	5.064E+00	1.654E+00	4.556E-01	0.000E+00	0.000E+00	0.000E+00	0.000E+00	0.000E+00	6.509E+01
Pb-210	1.664E-02	1.019E+02	3.483E-01	1.697E-01	3.206E+00	0.000E+00	0.000E+00	0.000E+00	0.000E+00	0.000E+00	1.056E+02
Ra-226	1.664E-02	4.076E+02	1.188E+00	1.455E+00	3.206E+00	0.000E+00	0.000E+00	0.000E+00	0.000E+00	0.000E+00	4.134E+02
Sr-90	3.123E-03	5.737E+02	1.158E+01	3.438E+00	6.017E-01	0.000E+00	0.000E+00	0.000E+00	0.000E+00	0.000E+00	5.893E+02

* Sum of all ingestion pathways, i.e. water independent plant, meat, milk, soil
and water-dependent water, fish, plant, meat, milk pathways

Amount of Intake Quantities QINT9(irn,i,t) and QINT9W(irn,i,t) for Inhalation of
Radon and its Decay Products as pCi/yr at t= 0.000E+00 years

Radon	Radionuclides							
Pathway	Rn-222	Po-218	Pb-214	Bi-214	Rn-220	Po-216	Pb-212	Bi-212
Water-ind.	0.000E+00	0.000E+00	0.000E+00	0.000E+00	0.000E+00	0.000E+00	0.000E+00	0.000E+00
Water-dep.	0.000E+00	0.000E+00	0.000E+00	0.000E+00	0.000E+00	0.000E+00	0.000E+00	0.000E+00
Total	0.000E+00	0.000E+00	0.000E+00	0.000E+00	0.000E+00	0.000E+00	0.000E+00	0.000E+00

Water-ind. == Water-independent Water-dep. == Water-dependent

Excess Cancer Risks CNRS(i,p,t) for Individual Radionuclides (i) and Pathways (p)
and Fraction of Total Risk at t= 0.000E+00 years

Water Independent Pathways (Inhalation excludes radon)

Radio-	Ground		Inhalation		Plant		Meat		Milk		Soil	
Nuclide	risk	fract.	risk	fract.	risk	fract.	risk	fract.	risk	fract.	risk	fract.
Cs-137	1.488E-06	0.0224	5.728E-12	0.0000	4.685E-08	0.0007	4.097E-09	0.0001	1.338E-09	0.0000	3.685E-10	0.0000
Pb-210	2.404E-08	0.0004	1.491E-08	0.0002	1.026E-05	0.1547	3.529E-08	0.0005	1.713E-08	0.0003	3.217E-07	0.0049
Ra-226	4.682E-05	0.7062	1.353E-08	0.0002	6.037E-06	0.0910	1.760E-08	0.0003	2.155E-08	0.0003	4.748E-08	0.0007
Sr-90	1.401E-08	0.0002	2.701E-11	0.0000	1.091E-06	0.0165	2.203E-08	0.0003	6.541E-09	0.0001	1.144E-09	0.0000
Total	4.835E-05	0.7292	2.848E-08	0.0004	1.743E-05	0.2629	7.903E-08	0.0012	4.656E-08	0.0007	3.707E-07	0.0056

Excess Cancer Risks CNRS(i,p,t) for Individual Radionuclides (i) and Pathways (p)
and Fraction of Total Risk at t= 0.000E+00 years

Water Dependent Pathways

Radio-	Water		Fish		Plant		Meat		Milk		All Pathways**	
Nuclide	risk	fract.	risk	fract.	risk	fract.	risk	fract.	risk	fract.	risk	fract.
Cs-137	0.000E+00	0.0000	0.000E+00	0.0000	0.000E+00	0.0000	0.000E+00	0.0000	0.000E+00	0.0000	1.541E-06	0.0232
Pb-210	0.000E+00	0.0000	0.000E+00	0.0000	0.000E+00	0.0000	0.000E+00	0.0000	0.000E+00	0.0000	1.067E-05	0.1609
Ra-226	0.000E+00	0.0000	0.000E+00	0.0000	0.000E+00	0.0000	0.000E+00	0.0000	0.000E+00	0.0000	5.296E-05	0.7987
Sr-90	0.000E+00	0.0000	0.000E+00	0.0000	0.000E+00	0.0000	0.000E+00	0.0000	0.000E+00	0.0000	1.135E-06	0.0171
Total	0.000E+00	0.0000	0.000E+00	0.0000	0.000E+00	0.0000	0.000E+00	0.0000	0.000E+00	0.0000	6.631E-05	1.0000

** Sum of water independent ground, inhalation, plant, meat, milk, soil
and water dependent water, fish, plant, meat, milk pathways

Excess Cancer Risks CNRS9(irn,i,t) and CNRS9W(irn,i,t) for Inhalation of
Radon and its Decay Products at t= 0.000E+00 years

Radon	Radionuclides							
Pathway	Rn-222	Po-218	Pb-214	Bi-214	Rn-220	Po-216	Pb-212	Bi-212
Water-ind.	0.000E+00	0.000E+00	0.000E+00	0.000E+00	0.000E+00	0.000E+00	0.000E+00	0.000E+00
Water-dep.	0.000E+00	0.000E+00	0.000E+00	0.000E+00	0.000E+00	0.000E+00	0.000E+00	0.000E+00
Total	0.000E+00	0.000E+00	0.000E+00	0.000E+00	0.000E+00	0.000E+00	0.000E+00	0.000E+00

Water-ind. == Water-independent Water-dep. == Water-dependent

Total Excess Cancer Risk CNRS(i,p,t)*** for Initially Existent Radionuclides (i) and Pathways (p)
and Fraction of Total Risk at t= 0.000E+00 years

Water Independent Pathways (Inhalation excludes radon)

Radio-	Ground		Inhalation		Radon		Plant		Meat		Milk		Soil	
Nuclide	risk	fract.	risk	fract.	risk	fract.	risk	fract.	risk	fract.	risk	fract.	risk	fract.
Cs-137	1.488E-06	0.0224	5.728E-12	0.0000	0.000E+00	0.0000	4.685E-08	0.0007	4.097E-09	0.0001	1.338E-09	0.0000	3.685E-10	0.0000
Pb-210	1.576E-08	0.0002	9.777E-09	0.0001	0.000E+00	0.0000	6.703E-06	0.1011	2.292E-08	0.0003	1.117E-08	0.0002	2.109E-07	0.0032
Ra-226	4.683E-05	0.7063	1.867E-08	0.0003	0.000E+00	0.0000	9.589E-06	0.1446	2.998E-08	0.0005	2.752E-08	0.0004	1.583E-07	0.0024
Sr-90	1.401E-08	0.0002	2.701E-11	0.0000	0.000E+00	0.0000	1.091E-06	0.0165	2.203E-08	0.0003	6.541E-09	0.0001	1.144E-09	0.0000
Total	4.835E-05	0.7292	2.848E-08	0.0004	0.000E+00	0.0000	1.743E-05	0.2629	7.903E-08	0.0012	4.656E-08	0.0007	3.707E-07	0.0056

Total Excess Cancer Risk CNRS(i,p,t)*** for Initially Existent Radionuclides (i) and Pathways (p)
and Fraction of Total Risk at t= 0.000E+00 years

Water Dependent Pathways

Radio-	Water		Fish		Radon		Plant		Meat		Milk		All pathways	
Nuclide	risk	fract.	risk	fract.	risk	fract.	risk	fract.	risk	fract.	risk	fract.	risk	fract.
Cs-137	0.000E+00	0.0000	0.000E+00	0.0000	0.000E+00	0.0000	0.000E+00	0.0000	0.000E+00	0.0000	0.000E+00	0.0000	1.541E-06	0.0232
Pb-210	0.000E+00	0.0000	0.000E+00	0.0000	0.000E+00	0.0000	0.000E+00	0.0000	0.000E+00	0.0000	0.000E+00	0.0000	6.974E-06	0.1052
Ra-226	0.000E+00	0.0000	0.000E+00	0.0000	0.000E+00	0.0000	0.000E+00	0.0000	0.000E+00	0.0000	0.000E+00	0.0000	5.666E-05	0.8545
Sr-90	0.000E+00	0.0000	0.000E+00	0.0000	0.000E+00	0.0000	0.000E+00	0.0000	0.000E+00	0.0000	0.000E+00	0.0000	1.135E-06	0.0171
Total	0.000E+00	0.0000	0.000E+00	0.0000	0.000E+00	0.0000	0.000E+00	0.0000	0.000E+00	0.0000	0.000E+00	0.0000	6.631E-05	1.0000

***CNRSI(i,p,t) includes contribution from decay daughter radionuclides

Amount of Intake Quantities QINT(i,p,t) for Individual Radionuclides (i) and Pathways (p)
As pCi/yr at t= 1.000E+00 years

Radio-	Water Independent Pathways (Inhalation w/o radon)					Water Dependent Pathways					Total
Nuclide	Inhalation	Plant	Meat	Milk	Soil	Water	Fish	Plant	Meat	Milk	Ingestion*
Cs-137	2.310E-03	5.659E+01	4.949E+00	1.616E+00	4.452E-01	0.000E+00	0.000E+00	0.000E+00	0.000E+00	0.000E+00	6.360E+01
Pb-210	1.661E-02	1.021E+02	3.515E-01	1.706E-01	3.201E+00	0.000E+00	0.000E+00	0.000E+00	0.000E+00	0.000E+00	1.058E+02
Ra-226	1.659E-02	4.065E+02	1.185E+00	1.451E+00	3.197E+00	0.000E+00	0.000E+00	0.000E+00	0.000E+00	0.000E+00	4.123E+02
Sr-90	3.032E-03	5.572E+02	1.125E+01	3.341E+00	5.843E-01	0.000E+00	0.000E+00	0.000E+00	0.000E+00	0.000E+00	5.724E+02

* Sum of all ingestion pathways, i.e. water independent plant, meat, milk, soil
and water-dependent water, fish, plant, meat, milk pathways

Amount of Intake Quantities QINT9(irn,i,t) and QINT9W(irn,i,t) for Inhalation of
Radon and its Decay Products as pCi/yr at t= 1.000E+00 years

Radon	Radionuclides							
Pathway	Rn-222	Po-218	Pb-214	Bi-214	Rn-220	Po-216	Pb-212	Bi-212
Water-ind.	0.000E+00	0.000E+00	0.000E+00	0.000E+00	0.000E+00	0.000E+00	0.000E+00	0.000E+00
Water-dep.	0.000E+00	0.000E+00	0.000E+00	0.000E+00	0.000E+00	0.000E+00	0.000E+00	0.000E+00
Total	0.000E+00	0.000E+00	0.000E+00	0.000E+00	0.000E+00	0.000E+00	0.000E+00	0.000E+00

Water-ind. == Water-independent Water-dep. == Water-dependent

Excess Cancer Risks CNRS(i,p,t) for Individual Radionuclides (i) and Pathways (p)
and Fraction of Total Risk at t= 1.000E+00 years

Water Independent Pathways (Inhalation excludes radon)

Radio-	Ground		Inhalation		Plant		Meat		Milk		Soil	
Nuclide	risk	fract.	risk	fract.	risk	fract.	risk	fract.	risk	fract.	risk	fract.
Cs-137	1.454E-06	0.0220	5.597E-12	0.0000	4.578E-08	0.0007	4.003E-09	0.0001	1.307E-09	0.0000	3.601E-10	0.0000
Pb-210	2.399E-08	0.0004	1.488E-08	0.0002	1.024E-05	0.1549	3.525E-08	0.0005	1.711E-08	0.0003	3.210E-07	0.0049
Ra-226	4.669E-05	0.7067	1.350E-08	0.0002	6.020E-06	0.0911	1.755E-08	0.0003	2.149E-08	0.0003	4.735E-08	0.0007
Sr-90	1.361E-08	0.0002	2.623E-11	0.0000	1.060E-06	0.0160	2.140E-08	0.0003	6.353E-09	0.0001	1.111E-09	0.0000
Total	4.818E-05	0.7293	2.841E-08	0.0004	1.736E-05	0.2628	7.821E-08	0.0012	4.626E-08	0.0007	3.698E-07	0.0056

Excess Cancer Risks CNRS(i,p,t) for Individual Radionuclides (i) and Pathways (p)
and Fraction of Total Risk at t= 1.000E+00 years

Water Dependent Pathways

Radio-	Water		Fish		Plant		Meat		Milk		All Pathways**	
Nuclide	risk	fract.	risk	fract.	risk	fract.	risk	fract.	risk	fract.	risk	fract.
Cs-137	0.000E+00	0.0000	0.000E+00	0.0000	0.000E+00	0.0000	0.000E+00	0.0000	0.000E+00	0.0000	1.506E-06	0.0228
Pb-210	0.000E+00	0.0000	0.000E+00	0.0000	0.000E+00	0.0000	0.000E+00	0.0000	0.000E+00	0.0000	1.065E-05	0.1612
Ra-226	0.000E+00	0.0000	0.000E+00	0.0000	0.000E+00	0.0000	0.000E+00	0.0000	0.000E+00	0.0000	5.281E-05	0.7993
Sr-90	0.000E+00	0.0000	0.000E+00	0.0000	0.000E+00	0.0000	0.000E+00	0.0000	0.000E+00	0.0000	1.102E-06	0.0167
Total	0.000E+00	0.0000	0.000E+00	0.0000	0.000E+00	0.0000	0.000E+00	0.0000	0.000E+00	0.0000	6.607E-05	1.0000

** Sum of water independent ground, inhalation, plant, meat, milk, soil
and water dependent water, fish, plant, meat, milk pathways

Excess Cancer Risks CNRS9(irn,i,t) and CNRS9W(irn,i,t) for Inhalation of
Radon and its Decay Products at t= 1.000E+00 years

Radon	Radionuclides							
Pathway	Rn-222	Po-218	Pb-214	Bi-214	Rn-220	Po-216	Pb-212	Bi-212
Water-ind.	0.000E+00	0.000E+00	0.000E+00	0.000E+00	0.000E+00	0.000E+00	0.000E+00	0.000E+00
Water-dep.	0.000E+00	0.000E+00	0.000E+00	0.000E+00	0.000E+00	0.000E+00	0.000E+00	0.000E+00
Total	0.000E+00	0.000E+00	0.000E+00	0.000E+00	0.000E+00	0.000E+00	0.000E+00	0.000E+00

Water-ind. == Water-independent Water-dep. == Water-dependent

Total Excess Cancer Risk CNRS(i,p,t)*** for Initially Existent Radionuclides (i) and Pathways (p)
and Fraction of Total Risk at t= 1.000E+00 years

Water Independent Pathways (Inhalation excludes radon)

Radio-	Ground		Inhalation		Radon		Plant		Meat		Milk		Soil	
Nuclide	risk	fract.	risk	fract.	risk	fract.	risk	fract.	risk	fract.	risk	fract.	risk	fract.
Cs-137	1.454E-06	0.0220	5.597E-12	0.0000	0.000E+00	0.0000	4.578E-08	0.0007	4.003E-09	0.0001	1.307E-09	0.0000	3.601E-10	0.0000
Pb-210	1.525E-08	0.0002	9.462E-09	0.0001	0.000E+00	0.0000	6.487E-06	0.0982	2.218E-08	0.0003	1.081E-08	0.0002	2.041E-07	0.0031
Ra-226	4.670E-05	0.7068	1.892E-08	0.0003	0.000E+00	0.0000	9.770E-06	0.1479	3.063E-08	0.0005	2.779E-08	0.0004	1.643E-07	0.0025
Sr-90	1.361E-08	0.0002	2.623E-11	0.0000	0.000E+00	0.0000	1.060E-06	0.0160	2.140E-08	0.0003	6.353E-09	0.0001	1.111E-09	0.0000
Total	4.818E-05	0.7293	2.841E-08	0.0004	0.000E+00	0.0000	1.736E-05	0.2628	7.821E-08	0.0012	4.626E-08	0.0007	3.698E-07	0.0056

Total Excess Cancer Risk CNRS(i,p,t)*** for Initially Existent Radionuclides (i) and Pathways (p)
and Fraction of Total Risk at t= 1.000E+00 years

Water Dependent Pathways

Radio-	Water		Fish		Radon		Plant		Meat		Milk		All pathways	
Nuclide	risk	fract.	risk	fract.	risk	fract.	risk	fract.	risk	fract.	risk	fract.	risk	fract.
Cs-137	0.000E+00	0.0000	0.000E+00	0.0000	0.000E+00	0.0000	0.000E+00	0.0000	0.000E+00	0.0000	0.000E+00	0.0000	1.506E-06	0.0228
Pb-210	0.000E+00	0.0000	0.000E+00	0.0000	0.000E+00	0.0000	0.000E+00	0.0000	0.000E+00	0.0000	0.000E+00	0.0000	6.749E-06	0.1022
Ra-226	0.000E+00	0.0000	0.000E+00	0.0000	0.000E+00	0.0000	0.000E+00	0.0000	0.000E+00	0.0000	0.000E+00	0.0000	5.671E-05	0.8584
Sr-90	0.000E+00	0.0000	0.000E+00	0.0000	0.000E+00	0.0000	0.000E+00	0.0000	0.000E+00	0.0000	0.000E+00	0.0000	1.102E-06	0.0167
Total	0.000E+00	0.0000	0.000E+00	0.0000	0.000E+00	0.0000	0.000E+00	0.0000	0.000E+00	0.0000	0.000E+00	0.0000	6.607E-05	1.0000

***CNRSI(i,p,t) includes contribution from decay daughter radionuclides

Amount of Intake Quantities QINT(i,p,t) for Individual Radionuclides (i) and Pathways (p)
As pCi/yr at t= 3.000E+00 years

Radio-	Water Independent Pathways (Inhalation w/o radon)					Water Dependent Pathways					Total
Nuclide	Inhalation	Plant	Meat	Milk	Soil	Water	Fish	Plant	Meat	Milk	Ingestion*
Cs-137	2.206E-03	5.403E+01	4.725E+00	1.543E+00	4.250E-01	0.000E+00	0.000E+00	0.000E+00	0.000E+00	0.000E+00	6.072E+01
Pb-210	1.655E-02	1.017E+02	3.503E-01	1.700E-01	3.190E+00	0.000E+00	0.000E+00	0.000E+00	0.000E+00	0.000E+00	1.054E+02
Ra-226	1.650E-02	4.042E+02	1.179E+00	1.443E+00	3.179E+00	0.000E+00	0.000E+00	0.000E+00	0.000E+00	0.000E+00	4.100E+02
Sr-90	2.860E-03	5.255E+02	1.061E+01	3.150E+00	5.510E-01	0.000E+00	0.000E+00	0.000E+00	0.000E+00	0.000E+00	5.398E+02

* Sum of all ingestion pathways, i.e. water independent plant, meat, milk, soil
and water-dependent water, fish, plant, meat, milk pathways

Amount of Intake Quantities QINT9(irn,i,t) and QINT9W(irn,i,t) for Inhalation of
Radon and its Decay Products as pCi/yr at t= 3.000E+00 years

Radon	Radionuclides							
Pathway	Rn-222	Po-218	Pb-214	Bi-214	Rn-220	Po-216	Pb-212	Bi-212
Water-ind.	0.000E+00	0.000E+00	0.000E+00	0.000E+00	0.000E+00	0.000E+00	0.000E+00	0.000E+00
Water-dep.	0.000E+00	0.000E+00	0.000E+00	0.000E+00	0.000E+00	0.000E+00	0.000E+00	0.000E+00
Total	0.000E+00	0.000E+00	0.000E+00	0.000E+00	0.000E+00	0.000E+00	0.000E+00	0.000E+00

Water-ind. == Water-independent Water-dep. == Water-dependent

Excess Cancer Risks CNRS(i,p,t) for Individual Radionuclides (i) and Pathways (p)
and Fraction of Total Risk at t= 3.000E+00 years

Water Independent Pathways (Inhalation excludes radon)

Radio-	Ground		Inhalation		Plant		Meat		Milk		Soil	
Nuclide	risk	fract.	risk	fract.	risk	fract.	risk	fract.	risk	fract.	risk	fract.
Cs-137	1.388E-06	0.0212	5.344E-12	0.0000	4.371E-08	0.0007	3.822E-09	0.0001	1.248E-09	0.0000	3.438E-10	0.0000
Pb-210	2.389E-08	0.0004	1.482E-08	0.0002	1.019E-05	0.1554	3.510E-08	0.0005	1.704E-08	0.0003	3.197E-07	0.0049
Ra-226	4.643E-05	0.7078	1.342E-08	0.0002	5.986E-06	0.0913	1.745E-08	0.0003	2.137E-08	0.0003	4.709E-08	0.0007
Sr-90	1.283E-08	0.0002	2.473E-11	0.0000	9.993E-07	0.0152	2.018E-08	0.0003	5.991E-09	0.0001	1.048E-09	0.0000
Total	4.786E-05	0.7295	2.827E-08	0.0004	1.722E-05	0.2626	7.656E-08	0.0012	4.565E-08	0.0007	3.682E-07	0.0056

Excess Cancer Risks CNRS(i,p,t) for Individual Radionuclides (i) and Pathways (p)
and Fraction of Total Risk at t= 3.000E+00 years

Water Dependent Pathways

Radio-	Water		Fish		Plant		Meat		Milk		All Pathways**	
Nuclide	risk	fract.	risk	fract.	risk	fract.	risk	fract.	risk	fract.	risk	fract.
Cs-137	0.000E+00	0.0000	0.000E+00	0.0000	0.000E+00	0.0000	0.000E+00	0.0000	0.000E+00	0.0000	1.438E-06	0.0219
Pb-210	0.000E+00	0.0000	0.000E+00	0.0000	0.000E+00	0.0000	0.000E+00	0.0000	0.000E+00	0.0000	1.060E-05	0.1617
Ra-226	0.000E+00	0.0000	0.000E+00	0.0000	0.000E+00	0.0000	0.000E+00	0.0000	0.000E+00	0.0000	5.252E-05	0.8006
Sr-90	0.000E+00	0.0000	0.000E+00	0.0000	0.000E+00	0.0000	0.000E+00	0.0000	0.000E+00	0.0000	1.039E-06	0.0158
Total	0.000E+00	0.0000	0.000E+00	0.0000	0.000E+00	0.0000	0.000E+00	0.0000	0.000E+00	0.0000	6.560E-05	1.0000

** Sum of water independent ground, inhalation, plant, meat, milk, soil
and water dependent water, fish, plant, meat, milk pathways

Excess Cancer Risks CNRS9(irn,i,t) and CNRS9W(irn,i,t) for Inhalation of
Radon and its Decay Products at t= 3.000E+00 years

Radon	Radionuclides							
Pathway	Rn-222	Po-218	Pb-214	Bi-214	Rn-220	Po-216	Pb-212	Bi-212
Water-ind.	0.000E+00	0.000E+00	0.000E+00	0.000E+00	0.000E+00	0.000E+00	0.000E+00	0.000E+00
Water-dep.	0.000E+00	0.000E+00	0.000E+00	0.000E+00	0.000E+00	0.000E+00	0.000E+00	0.000E+00
Total	0.000E+00	0.000E+00	0.000E+00	0.000E+00	0.000E+00	0.000E+00	0.000E+00	0.000E+00

Water-ind. == Water-independent Water-dep. == Water-dependent

Total Excess Cancer Risk CNRS(i,p,t)*** for Initially Existent Radionuclides (i) and Pathways (p)
and Fraction of Total Risk at t= 3.000E+00 years

Water Independent Pathways (Inhalation excludes radon)

Radio-	Ground		Inhalation		Radon		Plant		Meat		Milk		Soil	
Nuclide	risk	fract.	risk	fract.	risk	fract.	risk	fract.	risk	fract.	risk	fract.	risk	fract.
Cs-137	1.388E-06	0.0212	5.344E-12	0.0000	0.000E+00	0.0000	4.371E-08	0.0007	3.822E-09	0.0001	1.248E-09	0.0000	3.438E-10	0.0000
Pb-210	1.428E-08	0.0002	8.862E-09	0.0001	0.000E+00	0.0000	6.076E-06	0.0926	2.077E-08	0.0003	1.012E-08	0.0002	1.912E-07	0.0029
Ra-226	4.644E-05	0.7080	1.938E-08	0.0003	0.000E+00	0.0000	1.010E-05	0.1540	3.179E-08	0.0005	2.829E-08	0.0004	1.756E-07	0.0027
Sr-90	1.283E-08	0.0002	2.473E-11	0.0000	0.000E+00	0.0000	9.993E-07	0.0152	2.018E-08	0.0003	5.991E-09	0.0001	1.048E-09	0.0000
Total	4.786E-05	0.7295	2.827E-08	0.0004	0.000E+00	0.0000	1.722E-05	0.2626	7.656E-08	0.0012	4.565E-08	0.0007	3.682E-07	0.0056

Total Excess Cancer Risk CNRS(i,p,t)*** for Initially Existent Radionuclides (i) and Pathways (p)
and Fraction of Total Risk at t= 3.000E+00 years

Water Dependent Pathways

Radio-	Water		Fish		Radon		Plant		Meat		Milk		All pathways	
Nuclide	risk	fract.	risk	fract.	risk	fract.	risk	fract.	risk	fract.	risk	fract.	risk	fract.
Cs-137	0.000E+00	0.0000	0.000E+00	0.0000	0.000E+00	0.0000	0.000E+00	0.0000	0.000E+00	0.0000	0.000E+00	0.0000	1.438E-06	0.0219
Pb-210	0.000E+00	0.0000	0.000E+00	0.0000	0.000E+00	0.0000	0.000E+00	0.0000	0.000E+00	0.0000	0.000E+00	0.0000	6.321E-06	0.0964
Ra-226	0.000E+00	0.0000	0.000E+00	0.0000	0.000E+00	0.0000	0.000E+00	0.0000	0.000E+00	0.0000	0.000E+00	0.0000	5.680E-05	0.8659
Sr-90	0.000E+00	0.0000	0.000E+00	0.0000	0.000E+00	0.0000	0.000E+00	0.0000	0.000E+00	0.0000	0.000E+00	0.0000	1.039E-06	0.0158
Total	0.000E+00	0.0000	0.000E+00	0.0000	0.000E+00	0.0000	0.000E+00	0.0000	0.000E+00	0.0000	0.000E+00	0.0000	6.560E-05	1.0000

***CNRSI(i,p,t) includes contribution from decay daughter radionuclides

Amount of Intake Quantities QINT(i,p,t) for Individual Radionuclides (i) and Pathways (p)
As pCi/yr at t= 1.000E+01 years

Radio-	Water Independent Pathways (Inhalation w/o radon)					Water Dependent Pathways					Total
Nuclide	Inhalation	Plant	Meat	Milk	Soil	Water	Fish	Plant	Meat	Milk	Ingestion*
Cs-137	1.876E-03	4.595E+01	4.018E+00	1.312E+00	3.615E-01	0.000E+00	0.000E+00	0.000E+00	0.000E+00	0.000E+00	5.164E+01
Pb-210	1.634E-02	1.004E+02	3.457E-01	1.678E-01	3.148E+00	0.000E+00	0.000E+00	0.000E+00	0.000E+00	0.000E+00	1.041E+02
Ra-226	1.618E-02	3.963E+02	1.156E+00	1.415E+00	3.117E+00	0.000E+00	0.000E+00	0.000E+00	0.000E+00	0.000E+00	4.020E+02
Sr-90	2.329E-03	4.280E+02	8.643E+00	2.566E+00	4.488E-01	0.000E+00	0.000E+00	0.000E+00	0.000E+00	0.000E+00	4.396E+02

* Sum of all ingestion pathways, i.e. water independent plant, meat, milk, soil
and water-dependent water, fish, plant, meat, milk pathways

Amount of Intake Quantities QINT9(irn,i,t) and QINT9W(irn,i,t) for Inhalation of
Radon and its Decay Products as pCi/yr at t= 1.000E+01 years

Radon	Radionuclides							
Pathway	Rn-222	Po-218	Pb-214	Bi-214	Rn-220	Po-216	Pb-212	Bi-212
Water-ind.	0.000E+00	0.000E+00	0.000E+00	0.000E+00	0.000E+00	0.000E+00	0.000E+00	0.000E+00
Water-dep.	0.000E+00	0.000E+00	0.000E+00	0.000E+00	0.000E+00	0.000E+00	0.000E+00	0.000E+00
Total	0.000E+00	0.000E+00	0.000E+00	0.000E+00	0.000E+00	0.000E+00	0.000E+00	0.000E+00

Water-ind. == Water-independent Water-dep. == Water-dependent

Excess Cancer Risks CNRS(i,p,t) for Individual Radionuclides (i) and Pathways (p)
and Fraction of Total Risk at t= 1.000E+01 years

Water Independent Pathways (Inhalation excludes radon)

Radio-	Ground		Inhalation		Plant		Meat		Milk		Soil	
Nuclide	risk	fract.	risk	fract.	risk	fract.	risk	fract.	risk	fract.	risk	fract.
Cs-137	1.181E-06	0.0184	4.544E-12	0.0000	3.717E-08	0.0006	3.251E-09	0.0001	1.061E-09	0.0000	2.924E-10	0.0000
Pb-210	2.352E-08	0.0004	1.459E-08	0.0002	1.004E-05	0.1568	3.457E-08	0.0005	1.678E-08	0.0003	3.148E-07	0.0049
Ra-226	4.553E-05	0.7113	1.316E-08	0.0002	5.870E-06	0.0917	1.711E-08	0.0003	2.095E-08	0.0003	4.617E-08	0.0007
Sr-90	1.045E-08	0.0002	2.014E-11	0.0000	8.139E-07	0.0127	1.644E-08	0.0003	4.879E-09	0.0001	8.535E-10	0.0000
Total	4.674E-05	0.7303	2.778E-08	0.0004	1.676E-05	0.2618	7.137E-08	0.0011	4.367E-08	0.0007	3.621E-07	0.0057

Excess Cancer Risks CNRS(i,p,t) for Individual Radionuclides (i) and Pathways (p)
and Fraction of Total Risk at t= 1.000E+01 years

Water Dependent Pathways

Radio-	Water		Fish		Plant		Meat		Milk		All Pathways**	
Nuclide	risk	fract.	risk	fract.	risk	fract.	risk	fract.	risk	fract.	risk	fract.
Cs-137	0.000E+00	0.0000	0.000E+00	0.0000	0.000E+00	0.0000	0.000E+00	0.0000	0.000E+00	0.0000	1.223E-06	0.0191
Pb-210	0.000E+00	0.0000	0.000E+00	0.0000	0.000E+00	0.0000	0.000E+00	0.0000	0.000E+00	0.0000	1.044E-05	0.1632
Ra-226	0.000E+00	0.0000	0.000E+00	0.0000	0.000E+00	0.0000	0.000E+00	0.0000	0.000E+00	0.0000	5.150E-05	0.8045
Sr-90	0.000E+00	0.0000	0.000E+00	0.0000	0.000E+00	0.0000	0.000E+00	0.0000	0.000E+00	0.0000	8.465E-07	0.0132
Total	0.000E+00	0.0000	0.000E+00	0.0000	0.000E+00	0.0000	0.000E+00	0.0000	0.000E+00	0.0000	6.401E-05	1.0000

** Sum of water independent ground, inhalation, plant, meat, milk, soil
and water dependent water, fish, plant, meat, milk pathways

Excess Cancer Risks CNRS9(irn,i,t) and CNRS9W(irn,i,t) for Inhalation of
Radon and its Decay Products at t= 1.000E+01 years

Radon	Radionuclides							
Pathway	Rn-222	Po-218	Pb-214	Bi-214	Rn-220	Po-216	Pb-212	Bi-212
Water-ind.	0.000E+00	0.000E+00	0.000E+00	0.000E+00	0.000E+00	0.000E+00	0.000E+00	0.000E+00
Water-dep.	0.000E+00	0.000E+00	0.000E+00	0.000E+00	0.000E+00	0.000E+00	0.000E+00	0.000E+00
Total	0.000E+00	0.000E+00	0.000E+00	0.000E+00	0.000E+00	0.000E+00	0.000E+00	0.000E+00

Water-ind. == Water-independent Water-dep. == Water-dependent

Total Excess Cancer Risk CNRS(i,p,t)*** for Initially Existent Radionuclides (i) and Pathways (p)
and Fraction of Total Risk at t= 1.000E+01 years

Water Independent Pathways (Inhalation excludes radon)

Radio-	Ground		Inhalation		Radon		Plant		Meat		Milk		Soil	
Nuclide	risk	fract.	risk	fract.	risk	fract.	risk	fract.	risk	fract.	risk	fract.	risk	fract.
Cs-137	1.181E-06	0.0184	4.544E-12	0.0000	0.000E+00	0.0000	3.717E-08	0.0006	3.251E-09	0.0001	1.061E-09	0.0000	2.924E-10	0.0000
Pb-210	1.136E-08	0.0002	7.046E-09	0.0001	0.000E+00	0.0000	4.831E-06	0.0755	1.652E-08	0.0003	8.048E-09	0.0001	1.520E-07	0.0024
Ra-226	4.554E-05	0.7115	2.071E-08	0.0003	0.000E+00	0.0000	1.108E-05	0.1731	3.517E-08	0.0005	2.968E-08	0.0005	2.090E-07	0.0033
Sr-90	1.045E-08	0.0002	2.014E-11	0.0000	0.000E+00	0.0000	8.139E-07	0.0127	1.644E-08	0.0003	4.879E-09	0.0001	8.535E-10	0.0000
Total	4.674E-05	0.7303	2.778E-08	0.0004	0.000E+00	0.0000	1.676E-05	0.2618	7.137E-08	0.0011	4.367E-08	0.0007	3.621E-07	0.0057

Total Excess Cancer Risk CNRS(i,p,t)*** for Initially Existent Radionuclides (i) and Pathways (p)
and Fraction of Total Risk at t= 1.000E+01 years

Water Dependent Pathways

Radio-	Water		Fish		Radon		Plant		Meat		Milk		All pathways	
Nuclide	risk	fract.	risk	fract.	risk	fract.	risk	fract.	risk	fract.	risk	fract.	risk	fract.
Cs-137	0.000E+00	0.0000	0.000E+00	0.0000	0.000E+00	0.0000	0.000E+00	0.0000	0.000E+00	0.0000	0.000E+00	0.0000	1.223E-06	0.0191
Pb-210	0.000E+00	0.0000	0.000E+00	0.0000	0.000E+00	0.0000	0.000E+00	0.0000	0.000E+00	0.0000	0.000E+00	0.0000	5.026E-06	0.0785
Ra-226	0.000E+00	0.0000	0.000E+00	0.0000	0.000E+00	0.0000	0.000E+00	0.0000	0.000E+00	0.0000	0.000E+00	0.0000	5.691E-05	0.8891
Sr-90	0.000E+00	0.0000	0.000E+00	0.0000	0.000E+00	0.0000	0.000E+00	0.0000	0.000E+00	0.0000	0.000E+00	0.0000	8.465E-07	0.0132
Total	0.000E+00	0.0000	0.000E+00	0.0000	0.000E+00	0.0000	0.000E+00	0.0000	0.000E+00	0.0000	0.000E+00	0.0000	6.401E-05	1.0000

***CNRSI(i,p,t) includes contribution from decay daughter radionuclides

Amount of Intake Quantities QINT(i,p,t) for Individual Radionuclides (i) and Pathways (p)
As pCi/yr at t= 3.000E+01 years

Radio-	Water Independent Pathways (Inhalation w/o radon)					Water Dependent Pathways					Total
Nuclide	Inhalation	Plant	Meat	Milk	Soil	Water	Fish	Plant	Meat	Milk	Ingestion*
Cs-137	1.181E-03	2.893E+01	2.529E+00	8.259E-01	2.275E-01	0.000E+00	0.000E+00	0.000E+00	0.000E+00	0.000E+00	3.251E+01
Pb-210	1.564E-02	9.611E+01	3.310E-01	1.606E-01	3.014E+00	0.000E+00	0.000E+00	0.000E+00	0.000E+00	0.000E+00	9.962E+01
Ra-226	1.530E-02	3.747E+02	1.093E+00	1.338E+00	2.947E+00	0.000E+00	0.000E+00	0.000E+00	0.000E+00	0.000E+00	3.801E+02
Sr-90	1.296E-03	2.381E+02	4.808E+00	1.427E+00	2.497E-01	0.000E+00	0.000E+00	0.000E+00	0.000E+00	0.000E+00	2.446E+02

* Sum of all ingestion pathways, i.e. water independent plant, meat, milk, soil
and water-dependent water, fish, plant, meat, milk pathways

Amount of Intake Quantities QINT9(irn,i,t) and QINT9W(irn,i,t) for Inhalation of
Radon and its Decay Products as pCi/yr at t= 3.000E+01 years

Radon	Radionuclides							
Pathway	Rn-222	Po-218	Pb-214	Bi-214	Rn-220	Po-216	Pb-212	Bi-212
Water-ind.	0.000E+00	0.000E+00	0.000E+00	0.000E+00	0.000E+00	0.000E+00	0.000E+00	0.000E+00
Water-dep.	0.000E+00	0.000E+00	0.000E+00	0.000E+00	0.000E+00	0.000E+00	0.000E+00	0.000E+00
Total	0.000E+00	0.000E+00	0.000E+00	0.000E+00	0.000E+00	0.000E+00	0.000E+00	0.000E+00

Water-ind. == Water-independent Water-dep. == Water-dependent

Excess Cancer Risks CNRS(i,p,t) for Individual Radionuclides (i) and Pathways (p)
and Fraction of Total Risk at t= 3.000E+01 years

Water Independent Pathways (Inhalation excludes radon)

Radio-	Ground		Inhalation		Plant		Meat		Milk		Soil	
Nuclide	risk	fract.	risk	fract.	risk	fract.	risk	fract.	risk	fract.	risk	fract.
Cs-137	7.434E-07	0.0124	2.861E-12	0.0000	2.340E-08	0.0004	2.046E-09	0.0000	6.682E-10	0.0000	1.841E-10	0.0000
Pb-210	2.242E-08	0.0004	1.391E-08	0.0002	9.569E-06	0.1598	3.295E-08	0.0006	1.599E-08	0.0003	3.001E-07	0.0050
Ra-226	4.304E-05	0.7188	1.244E-08	0.0002	5.549E-06	0.0927	1.618E-08	0.0003	1.981E-08	0.0003	4.365E-08	0.0007
Sr-90	5.814E-09	0.0001	1.121E-11	0.0000	4.528E-07	0.0076	9.144E-09	0.0002	2.715E-09	0.0000	4.748E-10	0.0000
Total	4.381E-05	0.7317	2.637E-08	0.0004	1.560E-05	0.2604	6.032E-08	0.0010	3.918E-08	0.0007	3.444E-07	0.0058

Excess Cancer Risks CNRS(i,p,t) for Individual Radionuclides (i) and Pathways (p)
and Fraction of Total Risk at t= 3.000E+01 years

Water Dependent Pathways

Radio-	Water		Fish		Plant		Meat		Milk		All Pathways**	
Nuclide	risk	fract.	risk	fract.	risk	fract.	risk	fract.	risk	fract.	risk	fract.
Cs-137	0.000E+00	0.0000	0.000E+00	0.0000	0.000E+00	0.0000	0.000E+00	0.0000	0.000E+00	0.0000	7.697E-07	0.0129
Pb-210	0.000E+00	0.0000	0.000E+00	0.0000	0.000E+00	0.0000	0.000E+00	0.0000	0.000E+00	0.0000	9.955E-06	0.1662
Ra-226	0.000E+00	0.0000	0.000E+00	0.0000	0.000E+00	0.0000	0.000E+00	0.0000	0.000E+00	0.0000	4.868E-05	0.8130
Sr-90	0.000E+00	0.0000	0.000E+00	0.0000	0.000E+00	0.0000	0.000E+00	0.0000	0.000E+00	0.0000	4.709E-07	0.0079
Total	0.000E+00	0.0000	0.000E+00	0.0000	0.000E+00	0.0000	0.000E+00	0.0000	0.000E+00	0.0000	5.988E-05	1.0000

** Sum of water independent ground, inhalation, plant, meat, milk, soil
and water dependent water, fish, plant, meat, milk pathways

Excess Cancer Risks CNRS9(irn,i,t) and CNRS9W(irn,i,t) for Inhalation of
Radon and its Decay Products at t= 3.000E+01 years

Radon	Radionuclides							
Pathway	Rn-222	Po-218	Pb-214	Bi-214	Rn-220	Po-216	Pb-212	Bi-212
Water-ind.	0.000E+00	0.000E+00	0.000E+00	0.000E+00	0.000E+00	0.000E+00	0.000E+00	0.000E+00
Water-dep.	0.000E+00	0.000E+00	0.000E+00	0.000E+00	0.000E+00	0.000E+00	0.000E+00	0.000E+00
Total	0.000E+00	0.000E+00	0.000E+00	0.000E+00	0.000E+00	0.000E+00	0.000E+00	0.000E+00

Water-ind. == Water-independent Water-dep. == Water-dependent

Total Excess Cancer Risk CNRS(i,p,t)*** for Initially Existent Radionuclides (i) and Pathways (p)
and Fraction of Total Risk at t= 3.000E+01 years

Water Independent Pathways (Inhalation excludes radon)

Radio-	Ground		Inhalation		Radon		Plant		Meat		Milk		Soil	
Nuclide	risk	fract.	risk	fract.	risk	fract.	risk	fract.	risk	fract.	risk	fract.	risk	fract.
Cs-137	7.434E-07	0.0124	2.861E-12	0.0000	0.000E+00	0.0000	2.340E-08	0.0004	2.046E-09	0.0000	6.682E-10	0.0000	1.841E-10	0.0000
Pb-210	5.900E-09	0.0001	3.661E-09	0.0001	0.000E+00	0.0000	2.510E-06	0.0419	8.581E-09	0.0001	4.181E-09	0.0001	7.896E-08	0.0013
Ra-226	4.306E-05	0.7191	2.269E-08	0.0004	0.000E+00	0.0000	1.261E-05	0.2106	4.055E-08	0.0007	3.162E-08	0.0005	2.648E-07	0.0044
Sr-90	5.814E-09	0.0001	1.121E-11	0.0000	0.000E+00	0.0000	4.528E-07	0.0076	9.144E-09	0.0002	2.715E-09	0.0000	4.748E-10	0.0000
Total	4.381E-05	0.7317	2.637E-08	0.0004	0.000E+00	0.0000	1.560E-05	0.2604	6.032E-08	0.0010	3.918E-08	0.0007	3.444E-07	0.0058

Total Excess Cancer Risk CNRS(i,p,t)*** for Initially Existent Radionuclides (i) and Pathways (p)
and Fraction of Total Risk at t= 3.000E+01 years

Water Dependent Pathways

Radio-	Water		Fish		Radon		Plant		Meat		Milk		All pathways	
Nuclide	risk	fract.	risk	fract.	risk	fract.	risk	fract.	risk	fract.	risk	fract.	risk	fract.
Cs-137	0.000E+00	0.0000	0.000E+00	0.0000	0.000E+00	0.0000	0.000E+00	0.0000	0.000E+00	0.0000	0.000E+00	0.0000	7.697E-07	0.0129
Pb-210	0.000E+00	0.0000	0.000E+00	0.0000	0.000E+00	0.0000	0.000E+00	0.0000	0.000E+00	0.0000	0.000E+00	0.0000	2.611E-06	0.0436
Ra-226	0.000E+00	0.0000	0.000E+00	0.0000	0.000E+00	0.0000	0.000E+00	0.0000	0.000E+00	0.0000	0.000E+00	0.0000	5.603E-05	0.9357
Sr-90	0.000E+00	0.0000	0.000E+00	0.0000	0.000E+00	0.0000	0.000E+00	0.0000	0.000E+00	0.0000	0.000E+00	0.0000	4.709E-07	0.0079
Total	0.000E+00	0.0000	0.000E+00	0.0000	0.000E+00	0.0000	0.000E+00	0.0000	0.000E+00	0.0000	0.000E+00	0.0000	5.988E-05	1.0000

***CNRSI(i,p,t) includes contribution from decay daughter radionuclides

Amount of Intake Quantities QINT(i,p,t) for Individual Radionuclides (i) and Pathways (p)
As pCi/yr at t= 1.000E+02 years

Radio-	Water Independent Pathways (Inhalation w/o radon)					Water Dependent Pathways					Total
Nuclide	Inhalation	Plant	Meat	Milk	Soil	Water	Fish	Plant	Meat	Milk	Ingestion*
Cs-137	2.337E-04	5.725E+00	5.006E-01	1.635E-01	4.504E-02	0.000E+00	0.000E+00	0.000E+00	0.000E+00	0.000E+00	6.434E+00
Pb-210	1.302E-02	8.002E+01	2.755E-01	1.337E-01	2.509E+00	0.000E+00	0.000E+00	0.000E+00	0.000E+00	0.000E+00	8.294E+01
Ra-226	1.257E-02	3.079E+02	8.976E-01	1.099E+00	2.422E+00	0.000E+00	0.000E+00	0.000E+00	0.000E+00	0.000E+00	3.123E+02
Sr-90	1.664E-04	3.058E+01	6.176E-01	1.833E-01	3.207E-02	0.000E+00	0.000E+00	0.000E+00	0.000E+00	0.000E+00	3.141E+01

* Sum of all ingestion pathways, i.e. water independent plant, meat, milk, soil
and water-dependent water, fish, plant, meat, milk pathways

Amount of Intake Quantities QINT9(irn,i,t) and QINT9W(irn,i,t) for Inhalation of
Radon and its Decay Products as pCi/yr at t= 1.000E+02 years

Radon	Radionuclides							
Pathway	Rn-222	Po-218	Pb-214	Bi-214	Rn-220	Po-216	Pb-212	Bi-212
Water-ind.	0.000E+00	0.000E+00	0.000E+00	0.000E+00	0.000E+00	0.000E+00	0.000E+00	0.000E+00
Water-dep.	0.000E+00	0.000E+00	0.000E+00	0.000E+00	0.000E+00	0.000E+00	0.000E+00	0.000E+00
Total	0.000E+00	0.000E+00	0.000E+00	0.000E+00	0.000E+00	0.000E+00	0.000E+00	0.000E+00

Water-ind. == Water-independent Water-dep. == Water-dependent

Excess Cancer Risks CNRS(i,p,t) for Individual Radionuclides (i) and Pathways (p)
and Fraction of Total Risk at t= 1.000E+02 years

Water Independent Pathways (Inhalation excludes radon)

Radio-	Ground		Inhalation		Plant		Meat		Milk		Soil	
Nuclide	risk	fract.	risk	fract.	risk	fract.	risk	fract.	risk	fract.	risk	fract.
Cs-137	1.471E-07	0.0030	5.662E-13	0.0000	4.631E-09	0.0001	4.050E-10	0.0000	1.322E-10	0.0000	3.643E-11	0.0000
Pb-210	1.859E-08	0.0004	1.153E-08	0.0002	7.931E-06	0.1637	2.731E-08	0.0006	1.325E-08	0.0003	2.487E-07	0.0051
Ra-226	3.536E-05	0.7297	1.022E-08	0.0002	4.560E-06	0.0941	1.329E-08	0.0003	1.628E-08	0.0003	3.586E-08	0.0007
Sr-90	7.467E-10	0.0000	1.439E-12	0.0000	5.815E-08	0.0012	1.174E-09	0.0000	3.486E-10	0.0000	6.098E-11	0.0000
Total	3.553E-05	0.7331	2.176E-08	0.0004	1.255E-05	0.2590	4.218E-08	0.0009	3.001E-08	0.0006	2.847E-07	0.0059

Excess Cancer Risks CNRS(i,p,t) for Individual Radionuclides (i) and Pathways (p)
and Fraction of Total Risk at t= 1.000E+02 years

Water Dependent Pathways

Radio-	Water		Fish		Plant		Meat		Milk		All Pathways**	
Nuclide	risk	fract.	risk	fract.	risk	fract.	risk	fract.	risk	fract.	risk	fract.
Cs-137	0.000E+00	0.0000	0.000E+00	0.0000	0.000E+00	0.0000	0.000E+00	0.0000	0.000E+00	0.0000	1.523E-07	0.0031
Pb-210	0.000E+00	0.0000	0.000E+00	0.0000	0.000E+00	0.0000	0.000E+00	0.0000	0.000E+00	0.0000	8.251E-06	0.1703
Ra-226	0.000E+00	0.0000	0.000E+00	0.0000	0.000E+00	0.0000	0.000E+00	0.0000	0.000E+00	0.0000	4.000E-05	0.8254
Sr-90	0.000E+00	0.0000	0.000E+00	0.0000	0.000E+00	0.0000	0.000E+00	0.0000	0.000E+00	0.0000	6.048E-08	0.0012
Total	0.000E+00	0.0000	0.000E+00	0.0000	0.000E+00	0.0000	0.000E+00	0.0000	0.000E+00	0.0000	4.846E-05	1.0000

** Sum of water independent ground, inhalation, plant, meat, milk, soil
and water dependent water, fish, plant, meat, milk pathways

Excess Cancer Risks CNRS9(irn,i,t) and CNRS9W(irn,i,t) for Inhalation of
Radon and its Decay Products at t= 1.000E+02 years

Radon	Radionuclides							
Pathway	Rn-222	Po-218	Pb-214	Bi-214	Rn-220	Po-216	Pb-212	Bi-212
Water-ind.	0.000E+00	0.000E+00	0.000E+00	0.000E+00	0.000E+00	0.000E+00	0.000E+00	0.000E+00
Water-dep.	0.000E+00	0.000E+00	0.000E+00	0.000E+00	0.000E+00	0.000E+00	0.000E+00	0.000E+00
Total	0.000E+00	0.000E+00	0.000E+00	0.000E+00	0.000E+00	0.000E+00	0.000E+00	0.000E+00

Water-ind. == Water-independent Water-dep. == Water-dependent

Total Excess Cancer Risk CNRS(i,p,t)*** for Initially Existent Radionuclides (i) and Pathways (p)
and Fraction of Total Risk at t= 1.000E+02 years

Water Independent Pathways (Inhalation excludes radon)

Radio-	Ground		Inhalation		Radon		Plant		Meat		Milk		Soil	
Nuclide	risk	fract.	risk	fract.	risk	fract.	risk	fract.	risk	fract.	risk	fract.	risk	fract.
Cs-137	1.471E-07	0.0030	5.662E-13	0.0000	0.000E+00	0.0000	4.631E-09	0.0001	4.050E-10	0.0000	1.322E-10	0.0000	3.643E-11	0.0000
Pb-210	5.962E-10	0.0000	3.699E-10	0.0000	0.000E+00	0.0000	2.536E-07	0.0052	8.670E-10	0.0000	4.224E-10	0.0000	7.979E-09	0.0002
Ra-226	3.538E-05	0.7301	2.138E-08	0.0004	0.000E+00	0.0000	1.224E-05	0.2525	3.974E-08	0.0008	2.911E-08	0.0006	2.766E-07	0.0057
Sr-90	7.467E-10	0.0000	1.439E-12	0.0000	0.000E+00	0.0000	5.815E-08	0.0012	1.174E-09	0.0000	3.486E-10	0.0000	6.098E-11	0.0000
Total	3.553E-05	0.7331	2.176E-08	0.0004	0.000E+00	0.0000	1.255E-05	0.2590	4.218E-08	0.0009	3.001E-08	0.0006	2.847E-07	0.0059

Total Excess Cancer Risk CNRS(i,p,t)*** for Initially Existent Radionuclides (i) and Pathways (p)
and Fraction of Total Risk at t= 1.000E+02 years

Water Dependent Pathways

Radio-	Water		Fish		Radon		Plant		Meat		Milk		All pathways	
Nuclide	risk	fract.	risk	fract.	risk	fract.	risk	fract.	risk	fract.	risk	fract.	risk	fract.
Cs-137	0.000E+00	0.0000	0.000E+00	0.0000	0.000E+00	0.0000	0.000E+00	0.0000	0.000E+00	0.0000	0.000E+00	0.0000	1.523E-07	0.0031
Pb-210	0.000E+00	0.0000	0.000E+00	0.0000	0.000E+00	0.0000	0.000E+00	0.0000	0.000E+00	0.0000	0.000E+00	0.0000	2.638E-07	0.0054
Ra-226	0.000E+00	0.0000	0.000E+00	0.0000	0.000E+00	0.0000	0.000E+00	0.0000	0.000E+00	0.0000	0.000E+00	0.0000	4.799E-05	0.9902
Sr-90	0.000E+00	0.0000	0.000E+00	0.0000	0.000E+00	0.0000	0.000E+00	0.0000	0.000E+00	0.0000	0.000E+00	0.0000	6.048E-08	0.0012
Total	0.000E+00	0.0000	0.000E+00	0.0000	0.000E+00	0.0000	0.000E+00	0.0000	0.000E+00	0.0000	0.000E+00	0.0000	4.846E-05	1.0000

***CNRSI(i,p,t) includes contribution from decay daughter radionuclides

Amount of Intake Quantities QINT(i,p,t) for Individual Radionuclides (i) and Pathways (p)
As pCi/yr at t= 3.000E+02 years

Radio-	Water Independent Pathways (Inhalation w/o radon)					Water Dependent Pathways					Total
Nuclide	Inhalation	Plant	Meat	Milk	Soil	Water	Fish	Plant	Meat	Milk	Ingestion*
Cs-137	2.284E-06	5.595E-02	4.892E-03	1.597E-03	4.401E-04	0.000E+00	0.000E+00	0.000E+00	0.000E+00	0.000E+00	6.288E-02
Pb-210	7.442E-03	4.573E+01	1.574E-01	7.641E-02	1.434E+00	0.000E+00	0.000E+00	0.000E+00	0.000E+00	0.000E+00	4.739E+01
Ra-226	7.168E-03	1.756E+02	5.120E-01	6.269E-01	1.381E+00	0.000E+00	0.000E+00	0.000E+00	0.000E+00	0.000E+00	1.781E+02
Sr-90	4.727E-07	8.685E-02	1.754E-03	5.207E-04	9.108E-05	4.033E-02	2.046E-05	1.049E-03	1.090E-04	5.952E-05	1.308E-01

* Sum of all ingestion pathways, i.e. water independent plant, meat, milk, soil
and water-dependent water, fish, plant, meat, milk pathways

Amount of Intake Quantities QINT9(irn,i,t) and QINT9W(irn,i,t) for Inhalation of
Radon and its Decay Products as pCi/yr at t= 3.000E+02 years

Radon	Radionuclides							
Pathway	Rn-222	Po-218	Pb-214	Bi-214	Rn-220	Po-216	Pb-212	Bi-212
Water-ind.	0.000E+00	0.000E+00	0.000E+00	0.000E+00	0.000E+00	0.000E+00	0.000E+00	0.000E+00
Water-dep.	0.000E+00	0.000E+00	0.000E+00	0.000E+00	0.000E+00	0.000E+00	0.000E+00	0.000E+00
Total	0.000E+00	0.000E+00	0.000E+00	0.000E+00	0.000E+00	0.000E+00	0.000E+00	0.000E+00

Water-ind. == Water-independent Water-dep. == Water-dependent

Excess Cancer Risks CNRS(i,p,t) for Individual Radionuclides (i) and Pathways (p)
and Fraction of Total Risk at t= 3.000E+02 years

Water Independent Pathways (Inhalation excludes radon)

Radio-	Ground		Inhalation		Plant		Meat		Milk		Soil	
Nuclide	risk	fract.	risk	fract.	risk	fract.	risk	fract.	risk	fract.	risk	fract.
Cs-137	1.438E-09	0.0001	5.533E-15	0.0000	4.526E-11	0.0000	3.958E-12	0.0000	1.292E-12	0.0000	3.560E-13	0.0000
Pb-210	1.061E-08	0.0004	6.586E-09	0.0002	4.530E-06	0.1645	1.560E-08	0.0006	7.570E-09	0.0003	1.421E-07	0.0052
Ra-226	2.017E-05	0.7327	5.831E-09	0.0002	2.601E-06	0.0945	7.583E-09	0.0003	9.284E-09	0.0003	2.046E-08	0.0007
Sr-90	2.121E-12	0.0000	4.088E-15	0.0000	1.652E-10	0.0000	3.336E-12	0.0000	9.902E-13	0.0000	1.732E-13	0.0000
Total	2.018E-05	0.7332	1.242E-08	0.0005	7.131E-06	0.2590	2.319E-08	0.0008	1.686E-08	0.0006	1.625E-07	0.0059

Excess Cancer Risks CNRS(i,p,t) for Individual Radionuclides (i) and Pathways (p)
and Fraction of Total Risk at t= 3.000E+02 years

Water Dependent Pathways

Radio-	Water		Fish		Plant		Meat		Milk		All Pathways**	
Nuclide	risk	fract.	risk	fract.	risk	fract.	risk	fract.	risk	fract.	risk	fract.
Cs-137	0.000E+00	0.0000	0.000E+00	0.0000	0.000E+00	0.0000	0.000E+00	0.0000	0.000E+00	0.0000	1.489E-09	0.0001
Pb-210	0.000E+00	0.0000	0.000E+00	0.0000	0.000E+00	0.0000	0.000E+00	0.0000	0.000E+00	0.0000	4.712E-06	0.1712
Ra-226	0.000E+00	0.0000	0.000E+00	0.0000	0.000E+00	0.0000	0.000E+00	0.0000	0.000E+00	0.0000	2.282E-05	0.8288
Sr-90	6.920E-11	0.0000	4.521E-14	0.0000	2.319E-12	0.0000	2.410E-13	0.0000	1.315E-13	0.0000	2.437E-10	0.0000
Total	6.920E-11	0.0000	4.521E-14	0.0000	2.319E-12	0.0000	2.410E-13	0.0000	1.315E-13	0.0000	2.753E-05	1.0000

** Sum of water independent ground, inhalation, plant, meat, milk, soil
and water dependent water, fish, plant, meat, milk pathways

Excess Cancer Risks CNRS9(irn,i,t) and CNRS9W(irn,i,t) for Inhalation of
Radon and its Decay Products at t= 3.000E+02 years

Radon	Radionuclides							
Pathway	Rn-222	Po-218	Pb-214	Bi-214	Rn-220	Po-216	Pb-212	Bi-212
Water-ind.	0.000E+00	0.000E+00	0.000E+00	0.000E+00	0.000E+00	0.000E+00	0.000E+00	0.000E+00
Water-dep.	0.000E+00	0.000E+00	0.000E+00	0.000E+00	0.000E+00	0.000E+00	0.000E+00	0.000E+00
Total	0.000E+00	0.000E+00	0.000E+00	0.000E+00	0.000E+00	0.000E+00	0.000E+00	0.000E+00

Water-ind. == Water-independent Water-dep. == Water-dependent

Total Excess Cancer Risk CNRS(i,p,t)*** for Initially Existent Radionuclides (i) and Pathways (p)
and Fraction of Total Risk at t= 3.000E+02 years

Water Independent Pathways (Inhalation excludes radon)

Radio-	Ground		Inhalation		Radon		Plant		Meat		Milk		Soil	
Nuclide	risk	fract.	risk	fract.	risk	fract.	risk	fract.	risk	fract.	risk	fract.	risk	fract.
Cs-137	1.438E-09	0.0001	5.533E-15	0.0000	0.000E+00	0.0000	4.526E-11	0.0000	3.958E-12	0.0000	1.292E-12	0.0000	3.560E-13	0.0000
Pb-210	8.533E-13	0.0000	5.294E-13	0.0000	0.000E+00	0.0000	3.630E-10	0.0000	1.241E-12	0.0000	6.046E-13	0.0000	1.142E-11	0.0000
Ra-226	2.018E-05	0.7331	1.242E-08	0.0005	0.000E+00	0.0000	7.130E-06	0.2590	2.318E-08	0.0008	1.685E-08	0.0006	1.625E-07	0.0059
Sr-90	2.121E-12	0.0000	4.088E-15	0.0000	0.000E+00	0.0000	1.652E-10	0.0000	3.336E-12	0.0000	9.902E-13	0.0000	1.732E-13	0.0000
Total	2.018E-05	0.7332	1.242E-08	0.0005	0.000E+00	0.0000	7.131E-06	0.2590	2.319E-08	0.0008	1.686E-08	0.0006	1.625E-07	0.0059

Total Excess Cancer Risk CNRS(i,p,t)*** for Initially Existent Radionuclides (i) and Pathways (p)
and Fraction of Total Risk at t= 3.000E+02 years

Water Dependent Pathways

Radio-	Water		Fish		Radon		Plant		Meat		Milk		All pathways	
Nuclide	risk	fract.	risk	fract.	risk	fract.	risk	fract.	risk	fract.	risk	fract.	risk	fract.
Cs-137	0.000E+00	0.0000	0.000E+00	0.0000	0.000E+00	0.0000	0.000E+00	0.0000	0.000E+00	0.0000	0.000E+00	0.0000	1.489E-09	0.0001
Pb-210	0.000E+00	0.0000	0.000E+00	0.0000	0.000E+00	0.0000	0.000E+00	0.0000	0.000E+00	0.0000	0.000E+00	0.0000	3.776E-10	0.0000
Ra-226	0.000E+00	0.0000	0.000E+00	0.0000	0.000E+00	0.0000	0.000E+00	0.0000	0.000E+00	0.0000	0.000E+00	0.0000	2.753E-05	0.9999
Sr-90	6.920E-11	0.0000	4.521E-14	0.0000	0.000E+00	0.0000	2.319E-12	0.0000	2.410E-13	0.0000	1.315E-13	0.0000	2.437E-10	0.0000
Total	6.920E-11	0.0000	4.521E-14	0.0000	0.000E+00	0.0000	2.319E-12	0.0000	2.410E-13	0.0000	1.315E-13	0.0000	2.753E-05	1.0000

***CNRSI(i,p,t) includes contribution from decay daughter radionuclides

Amount of Intake Quantities QINT(i,p,t) for Individual Radionuclides (i) and Pathways (p)
As pCi/yr at t= 1.000E+03 years

Radio-	Water Independent Pathways (Inhalation w/o radon)					Water Dependent Pathways					Total
Nuclide	Inhalation	Plant	Meat	Milk	Soil	Water	Fish	Plant	Meat	Milk	Ingestion*
Cs-137	2.107E-13	5.161E-09	4.513E-10	1.474E-10	4.060E-11	0.000E+00	0.000E+00	0.000E+00	0.000E+00	0.000E+00	5.800E-09
Pb-210	1.043E-03	6.410E+00	2.207E-02	1.071E-02	2.010E-01	7.559E+01	1.584E-01	1.830E+00	2.038E-02	1.670E-02	8.426E+01
Ra-226	1.005E-03	2.462E+01	7.177E-02	8.788E-02	1.936E-01	1.076E+02	6.524E-02	2.623E+00	3.618E-02	7.916E-02	1.353E+02
Sr-90	5.772E-16	1.061E-10	2.142E-12	6.358E-13	1.112E-13	6.612E-10	3.355E-13	1.721E-11	1.791E-12	9.764E-13	7.904E-10

* Sum of all ingestion pathways, i.e. water independent plant, meat, milk, soil
and water-dependent water, fish, plant, meat, milk pathways

Amount of Intake Quantities QINT9(irn,i,t) and QINT9W(irn,i,t) for Inhalation of
Radon and its Decay Products as pCi/yr at t= 1.000E+03 years

Radon	Radionuclides							
Pathway	Rn-222	Po-218	Pb-214	Bi-214	Rn-220	Po-216	Pb-212	Bi-212
Water-ind.	0.000E+00	0.000E+00	0.000E+00	0.000E+00	0.000E+00	0.000E+00	0.000E+00	0.000E+00
Water-dep.	0.000E+00	0.000E+00	0.000E+00	0.000E+00	0.000E+00	0.000E+00	0.000E+00	0.000E+00
Total	0.000E+00	0.000E+00	0.000E+00	0.000E+00	0.000E+00	0.000E+00	0.000E+00	0.000E+00

Water-ind. == Water-independent Water-dep. == Water-dependent

Excess Cancer Risks CNRS(i,p,t) for Individual Radionuclides (i) and Pathways (p)
and Fraction of Total Risk at t= 1.000E+03 years

Water Independent Pathways (Inhalation excludes radon)

Radio-	Ground		Inhalation		Plant		Meat		Milk		Soil	
Nuclide	risk	fract.	risk	fract.	risk	fract.	risk	fract.	risk	fract.	risk	fract.
Cs-137	1.326E-16	0.0000	5.104E-22	0.0000	4.175E-18	0.0000	3.651E-19	0.0000	1.192E-19	0.0000	3.284E-20	0.0000
Pb-210	1.488E-09	0.0001	9.231E-10	0.0001	6.350E-07	0.0555	2.186E-09	0.0002	1.061E-09	0.0001	1.991E-08	0.0017
Ra-226	2.828E-06	0.2473	8.174E-10	0.0001	3.646E-07	0.0319	1.063E-09	0.0001	1.301E-09	0.0001	2.868E-09	0.0003
Sr-90	2.590E-21	0.0000	4.991E-24	0.0000	2.017E-19	0.0000	4.073E-21	0.0000	1.209E-21	0.0000	2.115E-22	0.0000
Total	2.829E-06	0.2474	1.741E-09	0.0002	9.996E-07	0.0874	3.249E-09	0.0003	2.363E-09	0.0002	2.278E-08	0.0020

Excess Cancer Risks CNRS(i,p,t) for Individual Radionuclides (i) and Pathways (p)
and Fraction of Total Risk at t= 1.000E+03 years

Water Dependent Pathways

Radio-	Water		Fish		Plant		Meat		Milk		All Pathways**	
Nuclide	risk	fract.	risk	fract.	risk	fract.	risk	fract.	risk	fract.	risk	fract.
Cs-137	0.000E+00	0.0000	0.000E+00	0.0000	0.000E+00	0.0000	0.000E+00	0.0000	0.000E+00	0.0000	1.373E-16	0.0000
Pb-210	6.071E-06	0.5309	1.646E-08	0.0014	1.903E-07	0.0166	2.119E-09	0.0002	1.736E-09	0.0002	6.943E-06	0.6071
Ra-226	1.251E-06	0.1094	1.014E-09	0.0001	4.075E-08	0.0036	5.621E-10	0.0000	1.230E-09	0.0001	4.493E-06	0.3929
Sr-90	9.716E-19	0.0000	6.349E-22	0.0000	3.257E-20	0.0000	3.389E-21	0.0000	1.848E-21	0.0000	1.220E-18	0.0000
Total	7.323E-06	0.6403	1.748E-08	0.0015	2.310E-07	0.0202	2.681E-09	0.0002	2.966E-09	0.0003	1.144E-05	1.0000

** Sum of water independent ground, inhalation, plant, meat, milk, soil
and water dependent water, fish, plant, meat, milk pathways

Excess Cancer Risks CNRS9(irn,i,t) and CNRS9W(irn,i,t) for Inhalation of
Radon and its Decay Products at t= 1.000E+03 years

Radon	Radionuclides							
Pathway	Rn-222	Po-218	Pb-214	Bi-214	Rn-220	Po-216	Pb-212	Bi-212
Water-ind.	0.000E+00	0.000E+00	0.000E+00	0.000E+00	0.000E+00	0.000E+00	0.000E+00	0.000E+00
Water-dep.	0.000E+00	0.000E+00	0.000E+00	0.000E+00	0.000E+00	0.000E+00	0.000E+00	0.000E+00
Total	0.000E+00	0.000E+00	0.000E+00	0.000E+00	0.000E+00	0.000E+00	0.000E+00	0.000E+00

Water-ind. == Water-independent Water-dep. == Water-dependent

Total Excess Cancer Risk CNRS(i,p,t)*** for Initially Existent Radionuclides (i) and Pathways (p)
and Fraction of Total Risk at t= 1.000E+03 years

Water Independent Pathways (Inhalation excludes radon)

Radio-	Ground		Inhalation		Radon		Plant		Meat		Milk		Soil	
Nuclide	risk	fract.	risk	fract.	risk	fract.	risk	fract.	risk	fract.	risk	fract.	risk	fract.
Cs-137	1.326E-16	0.0000	5.104E-22	0.0000	0.000E+00	0.0000	4.175E-18	0.0000	3.651E-19	0.0000	1.192E-19	0.0000	3.284E-20	0.0000
Pb-210	9.465E-23	0.0000	5.872E-23	0.0000	0.000E+00	0.0000	4.026E-20	0.0000	1.377E-22	0.0000	6.707E-23	0.0000	1.267E-21	0.0000
Ra-226	2.829E-06	0.2474	1.741E-09	0.0002	0.000E+00	0.0000	9.996E-07	0.0874	3.249E-09	0.0003	2.363E-09	0.0002	2.278E-08	0.0020
Sr-90	2.590E-21	0.0000	4.991E-24	0.0000	0.000E+00	0.0000	2.017E-19	0.0000	4.073E-21	0.0000	1.209E-21	0.0000	2.115E-22	0.0000
Total	2.829E-06	0.2474	1.741E-09	0.0002	0.000E+00	0.0000	9.996E-07	0.0874	3.249E-09	0.0003	2.363E-09	0.0002	2.278E-08	0.0020

Total Excess Cancer Risk CNRS(i,p,t)*** for Initially Existent Radionuclides (i) and Pathways (p)
and Fraction of Total Risk at t= 1.000E+03 years

Water Dependent Pathways

Radio-	Water		Fish		Radon		Plant		Meat		Milk		All pathways	
Nuclide	risk	fract.	risk	fract.	risk	fract.	risk	fract.	risk	fract.	risk	fract.	risk	fract.
Cs-137	0.000E+00	0.0000	0.000E+00	0.0000	0.000E+00	0.0000	0.000E+00	0.0000	0.000E+00	0.0000	0.000E+00	0.0000	1.373E-16	0.0000
Pb-210	1.032E-19	0.0000	2.798E-22	0.0000	0.000E+00	0.0000	3.232E-21	0.0000	3.591E-23	0.0000	2.947E-23	0.0000	1.486E-19	0.0000
Ra-226	7.323E-06	0.6403	1.748E-08	0.0015	0.000E+00	0.0000	2.310E-07	0.0202	2.681E-09	0.0002	2.966E-09	0.0003	1.144E-05	1.0000
Sr-90	9.716E-19	0.0000	6.349E-22	0.0000	0.000E+00	0.0000	3.257E-20	0.0000	3.389E-21	0.0000	1.848E-21	0.0000	1.220E-18	0.0000
Total	7.323E-06	0.6403	1.748E-08	0.0015	0.000E+00	0.0000	2.310E-07	0.0202	2.681E-09	0.0002	2.966E-09	0.0003	1.144E-05	1.0000

***CNRSI(i,p,t) includes contribution from decay daughter radionuclides

ATTACHMENT 5

TRENCH UNIT
RESRAD REPORT
(on CD only)

This page intentionally left blank.

Table of Contents

Part I: Mixture Sums and Single Radionuclide Guidelines

Dose Conversion Factor (and Related) Parameter Summary ... 2
Site-Specific Parameter Summary 4
Summary of Pathway Selections 8
Contaminated Zone and Total Dose Summary 9
Total Dose Components
Time = 0.000E+00 10
Time = 1.000E+00 11
Time = 3.000E+00 12
Time = 1.000E+01 13
Time = 3.000E+01 14
Time = 1.000E+02 15
Time = 3.000E+02 16
Time = 1.000E+03 17
Dose/Source Ratios Summed Over All Pathways 18
Single Radionuclide Soil Guidelines 18
Dose Per Nuclide Summed Over All Pathways 19
Soil Concentration Per Nuclide 19

Dose Conversion Factor (and Related) Parameter Summary
Dose Library: FGR 12 & FGR 11

Menu	Parameter	Current Value#	Base Case*	Parameter Name
A-1	DCF's for external ground radiation, (mrem/yr)/(pCi/g)			
A-1	At-218 (Source: FGR 12)	5.847E-03	5.847E-03	DCF1(1)
A-1	Ba-137m (Source: FGR 12)	3.606E+00	3.606E+00	DCF1(2)
A-1	Bi-210 (Source: FGR 12)	3.606E-03	3.606E-03	DCF1(3)
A-1	Bi-214 (Source: FGR 12)	9.808E+00	9.808E+00	DCF1(4)
A-1	Cs-137 (Source: FGR 12)	7.510E-04	7.510E-04	DCF1(5)
A-1	Pb-210 (Source: FGR 12)	2.447E-03	2.447E-03	DCF1(6)
A-1	Pb-214 (Source: FGR 12)	1.341E+00	1.341E+00	DCF1(7)
A-1	Po-210 (Source: FGR 12)	5.231E-05	5.231E-05	DCF1(8)
A-1	Po-214 (Source: FGR 12)	5.138E-04	5.138E-04	DCF1(9)
A-1	Po-218 (Source: FGR 12)	5.642E-05	5.642E-05	DCF1(10)
A-1	Ra-226 (Source: FGR 12)	3.176E-02	3.176E-02	DCF1(11)
A-1	Rn-222 (Source: FGR 12)	2.354E-03	2.354E-03	DCF1(12)
A-1	Sr-90 (Source: FGR 12)	7.043E-04	7.043E-04	DCF1(13)
A-1	Tl-210 (Source: no data)	0.000E+00	-2.000E+00	DCF1(14)
A-1	Y-90 (Source: FGR 12)	2.391E-02	2.391E-02	DCF1(15)
B-1	Dose conversion factors for inhalation, mrem/pCi:			
B-1	Cs-137+D	3.190E-05	3.190E-05	DCF2(1)
B-1	Pb-210+D	2.320E-02	1.360E-02	DCF2(2)
B-1	Ra-226+D	8.594E-03	8.580E-03	DCF2(3)
B-1	Sr-90+D	1.308E-03	1.300E-03	DCF2(4)
D-1	Dose conversion factors for ingestion, mrem/pCi:			
D-1	Cs-137+D	5.000E-05	5.000E-05	DCF3(1)
D-1	Pb-210+D	7.276E-03	5.370E-03	DCF3(2)
D-1	Ra-226+D	1.321E-03	1.320E-03	DCF3(3)
D-1	Sr-90+D	1.528E-04	1.420E-04	DCF3(4)
D-34	Food transfer factors:			
D-34	Cs-137+D , plant/soil concentration ratio, dimensionless	4.000E-02	4.000E-02	RTF(1,1)
D-34	Cs-137+D , beef/livestock-intake ratio, (pCi/kg)/(pCi/d)	3.000E-02	3.000E-02	RTF(1,2)
D-34	Cs-137+D , milk/livestock-intake ratio, (pCi/L)/(pCi/d)	8.000E-03	8.000E-03	RTF(1,3)
D-34				
D-34	Pb-210+D , plant/soil concentration ratio, dimensionless	1.000E-02	1.000E-02	RTF(2,1)
D-34	Pb-210+D , beef/livestock-intake ratio, (pCi/kg)/(pCi/d)	8.000E-04	8.000E-04	RTF(2,2)
D-34	Pb-210+D , milk/livestock-intake ratio, (pCi/L)/(pCi/d)	3.000E-04	3.000E-04	RTF(2,3)
D-34				
D-34	Ra-226+D , plant/soil concentration ratio, dimensionless	4.000E-02	4.000E-02	RTF(3,1)
D-34	Ra-226+D , beef/livestock-intake ratio, (pCi/kg)/(pCi/d)	1.000E-03	1.000E-03	RTF(3,2)
D-34	Ra-226+D , milk/livestock-intake ratio, (pCi/L)/(pCi/d)	1.000E-03	1.000E-03	RTF(3,3)
D-34				
D-34	Sr-90+D , plant/soil concentration ratio, dimensionless	3.000E-01	3.000E-01	RTF(4,1)
D-34	Sr-90+D , beef/livestock-intake ratio, (pCi/kg)/(pCi/d)	8.000E-03	8.000E-03	RTF(4,2)
D-34	Sr-90+D , milk/livestock-intake ratio, (pCi/L)/(pCi/d)	2.000E-03	2.000E-03	RTF(4,3)
D-5	Bioaccumulation factors, fresh water, L/kg:			
D-5	Cs-137+D , fish	2.000E+03	2.000E+03	BIOFAC(1,1)
D-5	Cs-137+D , crustacea and mollusks	1.000E+02	1.000E+02	BIOFAC(1,2)
D-5				

Dose Conversion Factor (and Related) Parameter Summary (continued)
Dose Library: FGR 12 & FGR 11

Menu	Parameter	Current Value#	Base Case*	Parameter Name
D-5	Pb-210+D , fish	3.000E+02	3.000E+02	BIOFAC(2,1)
D-5	Pb-210+D , crustacea and mollusks	1.000E+02	1.000E+02	BIOFAC(2,2)
D-5				
D-5	Ra-226+D , fish	5.000E+01	5.000E+01	BIOFAC(3,1)
D-5	Ra-226+D , crustacea and mollusks	2.500E+02	2.500E+02	BIOFAC(3,2)
D-5				
D-5	Sr-90+D , fish	6.000E+01	6.000E+01	BIOFAC(4,1)
D-5	Sr-90+D , crustacea and mollusks	1.000E+02	1.000E+02	BIOFAC(4,2)

#For DCF1(xxx) only, factors are for infinite depth & area. See ETFG table in Ground Pathway of Detailed Report.
*Base Case means Default.Lib w/o Associate Nuclide contributions.

Site-Specific Parameter Summary

Menu	Parameter	User Input	Default	Used by RESRAD (If different from user input)	Parameter Name
R011	Area of contaminated zone (m**2)	3.140E+02	1.000E+04	---	AREA
R011	Thickness of contaminated zone (m)	2.000E+00	2.000E+00	---	THICK0
R011	Fraction of contamination that is submerged	0.000E+00	0.000E+00	---	SUBMFRACT
R011	Length parallel to aquifer flow (m)	1.000E+02	1.000E+02	---	LCZPAQ
R011	Basic radiation dose limit (mrem/yr)	2.500E+01	3.000E+01	---	BRDL
R011	Time since placement of material (yr)	0.000E+00	0.000E+00	---	TI
R011	Times for calculations (yr)	1.000E+00	1.000E+00	---	T(2)
R011	Times for calculations (yr)	3.000E+00	3.000E+00	---	T(3)
R011	Times for calculations (yr)	1.000E+01	1.000E+01	---	T(4)
R011	Times for calculations (yr)	3.000E+01	3.000E+01	---	T(5)
R011	Times for calculations (yr)	1.000E+02	1.000E+02	---	T(6)
R011	Times for calculations (yr)	3.000E+02	3.000E+02	---	T(7)
R011	Times for calculations (yr)	1.000E+03	1.000E+03	---	T(8)
R011	Times for calculations (yr)	not used	0.000E+00	---	T(9)
R011	Times for calculations (yr)	not used	0.000E+00	---	T(10)
R012	Initial principal radionuclide (pCi/g): Cs-137	4.500E-02	0.000E+00	---	S1(1)
R012	Initial principal radionuclide (pCi/g): Pb-210	5.100E-02	0.000E+00	---	S1(2)
R012	Initial principal radionuclide (pCi/g): Ra-226	5.100E-02	0.000E+00	---	S1(3)
R012	Initial principal radionuclide (pCi/g): Sr-90	2.110E-01	0.000E+00	---	S1(4)
R012	Concentration in groundwater (pCi/L): Cs-137	not used	0.000E+00	---	W1(1)
R012	Concentration in groundwater (pCi/L): Pb-210	not used	0.000E+00	---	W1(2)
R012	Concentration in groundwater (pCi/L): Ra-226	not used	0.000E+00	---	W1(3)
R012	Concentration in groundwater (pCi/L): Sr-90	not used	0.000E+00	---	W1(4)
R013	Cover depth (m)	0.000E+00	0.000E+00	---	COVER0
R013	Density of cover material (g/cm**3)	not used	1.500E+00	---	DENSCV
R013	Cover depth erosion rate (m/yr)	not used	1.000E-03	---	VCV
R013	Density of contaminated zone (g/cm**3)	1.500E+00	1.500E+00	---	DENSCZ
R013	Contaminated zone erosion rate (m/yr)	1.000E-03	1.000E-03	---	VCZ
R013	Contaminated zone total porosity	4.000E-01	4.000E-01	---	TPCZ
R013	Contaminated zone field capacity	2.000E-01	2.000E-01	---	FCCZ
R013	Contaminated zone hydraulic conductivity (m/yr)	1.000E+01	1.000E+01	---	HCCZ
R013	Contaminated zone b parameter	5.300E+00	5.300E+00	---	BCZ
R013	Average annual wind speed (m/sec)	2.000E+00	2.000E+00	---	WIND
R013	Humidity in air (g/m**3)	not used	8.000E+00	---	HUMID
R013	Evapotranspiration coefficient	5.000E-01	5.000E-01	---	EVAPTR
R013	Precipitation (m/yr)	1.000E+00	1.000E+00	---	PRECIP
R013	Irrigation (m/yr)	2.000E-01	2.000E-01	---	RI
R013	Irrigation mode	overhead	overhead	---	IDITCH
R013	Runoff coefficient	2.000E-01	2.000E-01	---	RUNOFF
R013	Watershed area for nearby stream or pond (m**2)	1.000E+06	1.000E+06	---	WAREA
R013	Accuracy for water/soil computations	1.000E-03	1.000E-03	---	EPS
R014	Density of saturated zone (g/cm**3)	1.500E+00	1.500E+00	---	DENSAQ
R014	Saturated zone total porosity	4.000E-01	4.000E-01	---	TPSZ
R014	Saturated zone effective porosity	2.000E-01	2.000E-01	---	EPSZ
R014	Saturated zone field capacity	2.000E-01	2.000E-01	---	FCSZ
R014	Saturated zone hydraulic conductivity (m/yr)	1.000E+02	1.000E+02	---	HCSZ
R014	Saturated zone hydraulic gradient	2.000E-02	2.000E-02	---	HGWT

Site-Specific Parameter Summary (continued)

Menu	Parameter	User Input	Default	Used by RESRAD (If different from user input)	Parameter Name
R014	Saturated zone b parameter	5.300E+00	5.300E+00	---	BSZ
R014	Water table drop rate (m/yr)	1.000E-03	1.000E-03	---	VWT
R014	Well pump intake depth (m below water table)	1.000E+01	1.000E+01	---	DWIBWT
R014	Model: Nondispersion (ND) or Mass-Balance (MB)	ND	ND	---	MODEL
R014	Well pumping rate (m**3/yr)	2.500E+02	2.500E+02	---	UW
R015	Number of unsaturated zone strata	1	1	---	NS
R015	Unsat. zone 1, thickness (m)	4.000E+00	4.000E+00	---	H(1)
R015	Unsat. zone 1, soil density (g/cm**3)	1.500E+00	1.500E+00	---	DENSUZ(1)
R015	Unsat. zone 1, total porosity	4.000E-01	4.000E-01	---	TPUZ(1)
R015	Unsat. zone 1, effective porosity	2.000E-01	2.000E-01	---	EPUZ(1)
R015	Unsat. zone 1, field capacity	2.000E-01	2.000E-01	---	FCUZ(1)
R015	Unsat. zone 1, soil-specific b parameter	5.300E+00	5.300E+00	---	BUZ(1)
R015	Unsat. zone 1, hydraulic conductivity (m/yr)	1.000E+01	1.000E+01	---	HCUZ(1)
R016	Distribution coefficients for Cs-137				
R016	Contaminated zone (cm**3/g)	4.600E+03	4.600E+03	---	DCNUCC(1)
R016	Unsaturated zone 1 (cm**3/g)	4.600E+03	4.600E+03	---	DCNUCU(1,1)
R016	Saturated zone (cm**3/g)	4.600E+03	4.600E+03	---	DCNUCS(1)
R016	Leach rate (/yr)	0.000E+00	0.000E+00	3.623E-05	ALEACH(1)
R016	Solubility constant	0.000E+00	0.000E+00	not used	SOLUBK(1)
R016	Distribution coefficients for Pb-210				
R016	Contaminated zone (cm**3/g)	1.000E+02	1.000E+02	---	DCNUCC(2)
R016	Unsaturated zone 1 (cm**3/g)	1.000E+02	1.000E+02	---	DCNUCU(2,1)
R016	Saturated zone (cm**3/g)	1.000E+02	1.000E+02	---	DCNUCS(2)
R016	Leach rate (/yr)	0.000E+00	0.000E+00	1.663E-03	ALEACH(2)
R016	Solubility constant	0.000E+00	0.000E+00	not used	SOLUBK(2)
R016	Distribution coefficients for Ra-226				
R016	Contaminated zone (cm**3/g)	7.000E+01	7.000E+01	---	DCNUCC(3)
R016	Unsaturated zone 1 (cm**3/g)	7.000E+01	7.000E+01	---	DCNUCU(3,1)
R016	Saturated zone (cm**3/g)	7.000E+01	7.000E+01	---	DCNUCS(3)
R016	Leach rate (/yr)	0.000E+00	0.000E+00	2.374E-03	ALEACH(3)
R016	Solubility constant	0.000E+00	0.000E+00	not used	SOLUBK(3)
R016	Distribution coefficients for Sr-90				
R016	Contaminated zone (cm**3/g)	3.000E+01	3.000E+01	---	DCNUCC(4)
R016	Unsaturated zone 1 (cm**3/g)	3.000E+01	3.000E+01	---	DCNUCU(4,1)
R016	Saturated zone (cm**3/g)	3.000E+01	3.000E+01	---	DCNUCS(4)
R016	Leach rate (/yr)	0.000E+00	0.000E+00	5.516E-03	ALEACH(4)
R016	Solubility constant	0.000E+00	0.000E+00	not used	SOLUBK(4)
R017	Inhalation rate (m**3/yr)	8.400E+03	8.400E+03	---	INHALR
R017	Mass loading for inhalation (g/m**3)	1.000E-04	1.000E-04	---	MLINH
R017	Exposure duration	3.000E+01	3.000E+01	---	ED
R017	Shielding factor, inhalation	4.000E-01	4.000E-01	---	SHF3
R017	Shielding factor, external gamma	7.000E-01	7.000E-01	---	SHF1
R017	Fraction of time spent indoors	5.000E-01	5.000E-01	---	FIND
R017	Fraction of time spent outdoors (on site)	2.500E-01	2.500E-01	---	FOTD

Site-Specific Parameter Summary (continued)

Menu	Parameter	User Input	Default	Used by RESRAD (If different from user input)	Parameter Name
R017	Shape factor flag, external gamma	1.000E+00	1.000E+00	>0 shows circular AREA.	FS
R017	Radii of shape factor array (used if FS = -1):				
R017	Outer annular radius (m), ring 1:	not used	5.000E+01	---	RAD_SHAPE(1)
R017	Outer annular radius (m), ring 2:	not used	7.071E+01	---	RAD_SHAPE(2)
R017	Outer annular radius (m), ring 3:	not used	0.000E+00	---	RAD_SHAPE(3)
R017	Outer annular radius (m), ring 4:	not used	0.000E+00	---	RAD_SHAPE(4)
R017	Outer annular radius (m), ring 5:	not used	0.000E+00	---	RAD_SHAPE(5)
R017	Outer annular radius (m), ring 6:	not used	0.000E+00	---	RAD_SHAPE(6)
R017	Outer annular radius (m), ring 7:	not used	0.000E+00	---	RAD_SHAPE(7)
R017	Outer annular radius (m), ring 8:	not used	0.000E+00	---	RAD_SHAPE(8)
R017	Outer annular radius (m), ring 9:	not used	0.000E+00	---	RAD_SHAPE(9)
R017	Outer annular radius (m), ring 10:	not used	0.000E+00	---	RAD_SHAPE(10)
R017	Outer annular radius (m), ring 11:	not used	0.000E+00	---	RAD_SHAPE(11)
R017	Outer annular radius (m), ring 12:	not used	0.000E+00	---	RAD_SHAPE(12)
R017	Fractions of annular areas within AREA:				
R017	Ring 1	not used	1.000E+00	---	FRACA(1)
R017	Ring 2	not used	2.732E-01	---	FRACA(2)
R017	Ring 3	not used	0.000E+00	---	FRACA(3)
R017	Ring 4	not used	0.000E+00	---	FRACA(4)
R017	Ring 5	not used	0.000E+00	---	FRACA(5)
R017	Ring 6	not used	0.000E+00	---	FRACA(6)
R017	Ring 7	not used	0.000E+00	---	FRACA(7)
R017	Ring 8	not used	0.000E+00	---	FRACA(8)
R017	Ring 9	not used	0.000E+00	---	FRACA(9)
R017	Ring 10	not used	0.000E+00	---	FRACA(10)
R017	Ring 11	not used	0.000E+00	---	FRACA(11)
R017	Ring 12	not used	0.000E+00	---	FRACA(12)
R018	Fruits, vegetables and grain consumption (kg/yr)	1.600E+02	1.600E+02	---	DIET(1)
R018	Leafy vegetable consumption (kg/yr)	1.400E+01	1.400E+01	---	DIET(2)
R018	Milk consumption (L/yr)	9.200E+01	9.200E+01	---	DIET(3)
R018	Meat and poultry consumption (kg/yr)	6.300E+01	6.300E+01	---	DIET(4)
R018	Fish consumption (kg/yr)	5.400E+00	5.400E+00	---	DIET(5)
R018	Other seafood consumption (kg/yr)	9.000E-01	9.000E-01	---	DIET(6)
R018	Soil ingestion rate (g/yr)	3.650E+01	3.650E+01	---	SOIL
R018	Drinking water intake (L/yr)	5.100E+02	5.100E+02	---	DWI
R018	Contamination fraction of drinking water	1.000E+00	1.000E+00	---	FDW
R018	Contamination fraction of household water	not used	1.000E+00	---	FHHW
R018	Contamination fraction of livestock water	1.000E+00	1.000E+00	---	FLW
R018	Contamination fraction of irrigation water	1.000E+00	1.000E+00	---	FIRW
R018	Contamination fraction of aquatic food	5.000E-01	5.000E-01	---	FR9
R018	Contamination fraction of plant food	-1	-1	0.157E+00	FPLANT
R018	Contamination fraction of meat	-1	-1	0.157E-01	FMEAT
R018	Contamination fraction of milk	-1	-1	0.157E-01	FMILK
R019	Livestock fodder intake for meat (kg/day)	6.800E+01	6.800E+01	---	LFI5
R019	Livestock fodder intake for milk (kg/day)	5.500E+01	5.500E+01	---	LFI6
R019	Livestock water intake for meat (L/day)	5.000E+01	5.000E+01	---	LWI5
R019	Livestock water intake for milk (L/day)	1.600E+02	1.600E+02	---	LWI6

Site-Specific Parameter Summary (continued)

Menu	Parameter	User Input	Default	Used by RESRAD (If different from user input)	Parameter Name
R019	Livestock soil intake (kg/day)	5.000E-01	5.000E-01	---	LSI
R019	Mass loading for foliar deposition (g/m**3)	1.000E-04	1.000E-04	---	MLFD
R019	Depth of soil mixing layer (m)	1.500E-01	1.500E-01	---	DM
R019	Depth of roots (m)	9.000E-01	9.000E-01	---	DROOT
R019	Drinking water fraction from ground water	1.000E+00	1.000E+00	---	FGWDW
R019	Household water fraction from ground water	not used	1.000E+00	---	FGWHH
R019	Livestock water fraction from ground water	1.000E+00	1.000E+00	---	FGWLW
R019	Irrigation fraction from ground water	1.000E+00	1.000E+00	---	FGWIR
R19B	Wet weight crop yield for Non-Leafy (kg/m**2)	7.000E-01	7.000E-01	---	YV(1)
R19B	Wet weight crop yield for Leafy (kg/m**2)	1.500E+00	1.500E+00	---	YV(2)
R19B	Wet weight crop yield for Fodder (kg/m**2)	1.100E+00	1.100E+00	---	YV(3)
R19B	Growing Season for Non-Leafy (years)	1.700E-01	1.700E-01	---	TE(1)
R19B	Growing Season for Leafy (years)	2.500E-01	2.500E-01	---	TE(2)
R19B	Growing Season for Fodder (years)	8.000E-02	8.000E-02	---	TE(3)
R19B	Translocation Factor for Non-Leafy	1.000E-01	1.000E-01	---	TIV(1)
R19B	Translocation Factor for Leafy	1.000E+00	1.000E+00	---	TIV(2)
R19B	Translocation Factor for Fodder	1.000E+00	1.000E+00	---	TIV(3)
R19B	Dry Foliar Interception Fraction for Non-Leafy	2.500E-01	2.500E-01	---	RDRY(1)
R19B	Dry Foliar Interception Fraction for Leafy	2.500E-01	2.500E-01	---	RDRY(2)
R19B	Dry Foliar Interception Fraction for Fodder	2.500E-01	2.500E-01	---	RDRY(3)
R19B	Wet Foliar Interception Fraction for Non-Leafy	2.500E-01	2.500E-01	---	RWET(1)
R19B	Wet Foliar Interception Fraction for Leafy	2.500E-01	2.500E-01	---	RWET(2)
R19B	Wet Foliar Interception Fraction for Fodder	2.500E-01	2.500E-01	---	RWET(3)
R19B	Weathering Removal Constant for Vegetation	2.000E+01	2.000E+01	---	WLAM
C14	C-12 concentration in water (g/cm**3)	not used	2.000E-05	---	C12WTR
C14	C-12 concentration in contaminated soil (g/g)	not used	3.000E-02	---	C12CZ
C14	Fraction of vegetation carbon from soil	not used	2.000E-02	---	CSOIL
C14	Fraction of vegetation carbon from air	not used	9.800E-01	---	CAIR
C14	C-14 evasion layer thickness in soil (m)	not used	3.000E-01	---	DMC
C14	C-14 evasion flux rate from soil (1/sec)	not used	7.000E-07	---	EVSN
C14	C-12 evasion flux rate from soil (1/sec)	not used	1.000E-10	---	REVSN
C14	Fraction of grain in beef cattle feed	not used	8.000E-01	---	AVFG4
C14	Fraction of grain in milk cow feed	not used	2.000E-01	---	AVFG5
STOR	Storage times of contaminated foodstuffs (days):				
STOR	Fruits, non-leafy vegetables, and grain	1.400E+01	1.400E+01	---	STOR_T(1)
STOR	Leafy vegetables	1.000E+00	1.000E+00	---	STOR_T(2)
STOR	Milk	1.000E+00	1.000E+00	---	STOR_T(3)
STOR	Meat and poultry	2.000E+01	2.000E+01	---	STOR_T(4)
STOR	Fish	7.000E+00	7.000E+00	---	STOR_T(5)
STOR	Crustacea and mollusks	7.000E+00	7.000E+00	---	STOR_T(6)
STOR	Well water	1.000E+00	1.000E+00	---	STOR_T(7)
STOR	Surface water	1.000E+00	1.000E+00	---	STOR_T(8)
STOR	Livestock fodder	4.500E+01	4.500E+01	---	STOR_T(9)
R021	Thickness of building foundation (m)	not used	1.500E-01	---	FLOOR1
R021	Bulk density of building foundation (g/cm**3)	not used	2.400E+00	---	DENSFL
R021	Total porosity of the cover material	not used	4.000E-01	---	TPCV

Site-Specific Parameter Summary (continued)

Menu	Parameter	User Input	Default	Used by RESRAD (If different from user input)	Parameter Name
R021	Total porosity of the building foundation	not used	1.000E-01	---	TPFL
R021	Volumetric water content of the cover material	not used	5.000E-02	---	PH2OCV
R021	Volumetric water content of the foundation	not used	3.000E-02	---	PH2OFL
R021	Diffusion coefficient for radon gas (m/sec):				
R021	in cover material	not used	2.000E-06	---	DIFCV
R021	in foundation material	not used	3.000E-07	---	DIFFL
R021	in contaminated zone soil	not used	2.000E-06	---	DIFCZ
R021	Radon vertical dimension of mixing (m)	not used	2.000E+00	---	HMIX
R021	Average building air exchange rate (1/hr)	not used	5.000E-01	---	REXG
R021	Height of the building (room) (m)	not used	2.500E+00	---	HRM
R021	Building interior area factor	not used	0.000E+00	---	FAI
R021	Building depth below ground surface (m)	not used	-1.000E+00	---	DMFL
R021	Emanating power of Rn-222 gas	not used	2.500E-01	---	EMANA(1)
R021	Emanating power of Rn-220 gas	not used	1.500E-01	---	EMANA(2)
TITL	Number of graphical time points	32	---	---	NPTS
TITL	Maximum number of integration points for dose	17	---	---	LYMAX
TITL	Maximum number of integration points for risk	257	---	---	KYMAX

Summary of Pathway Selections

Pathway	User Selection
1 -- external gamma	active
2 -- inhalation (w/o radon)	active
3 -- plant ingestion	active
4 -- meat ingestion	active
5 -- milk ingestion	active
6 -- aquatic foods	active
7 -- drinking water	active
8 -- soil ingestion	active
9 -- radon	suppressed
Find peak pathway doses	suppressed

Contaminated Zone Dimensions		Initial Soil Concentrations, pCi/g	
Area:	314.00 square meters	Cs-137	4.500E-02
Thickness:	2.00 meters	Pb-210	5.100E-02
Cover Depth:	0.00 meters	Ra-226	5.100E-02
		Sr-90	2.110E-01

Total Dose TDOSE(t), mrem/yr
Basic Radiation Dose Limit = 2.500E+01 mrem/yr
Total Mixture Sum M(t) = Fraction of Basic Dose Limit Received at Time (t)

t (years):	0.000E+00	1.000E+00	3.000E+00	1.000E+01	3.000E+01	1.000E+02	3.000E+02	1.000E+03
TDOSE(t):	8.232E-01	8.125E-01	7.915E-01	7.260E-01	5.891E-01	3.824E-01	2.056E-01	1.260E-01
M(t):	3.293E-02	3.250E-02	3.166E-02	2.904E-02	2.356E-02	1.530E-02	8.224E-03	5.039E-03

Maximum TDOSE(t): 8.232E-01 mrem/yr at t = 0.000E+00 years

Total Dose Contributions TDOSE(i,p,t) for Individual Radionuclides (i) and Pathways (p)
As mrem/yr and Fraction of Total Dose At t = 0.000E+00 years

Water Independent Pathways (Inhalation excludes radon)

Radio-	Ground		Inhalation		Radon		Plant		Meat		Milk		Soil	
Nuclide	mrem/yr	fract.	mrem/yr	fract.	mrem/yr	fract.	mrem/yr	fract.	mrem/yr	fract.	mrem/yr	fract.	mrem/yr	fract.
Cs-137	7.742E-02	0.0940	6.330E-08	0.0000	0.000E+00	0.0000	2.430E-03	0.0030	2.125E-04	0.0003	6.940E-05	0.0001	1.912E-05	0.0000
Pb-210	1.612E-04	0.0002	5.192E-05	0.0001	0.000E+00	0.0000	9.975E-02	0.1212	3.410E-04	0.0004	1.662E-04	0.0002	3.138E-03	0.0038
Ra-226	2.928E-01	0.3557	2.034E-05	0.0000	0.000E+00	0.0000	7.536E-02	0.0915	2.228E-04	0.0003	2.660E-04	0.0003	6.272E-04	0.0008
Sr-90	2.622E-03	0.0032	1.214E-05	0.0000	0.000E+00	0.0000	2.604E-01	0.3164	5.259E-03	0.0064	1.561E-03	0.0019	2.731E-04	0.0003
Total	3.730E-01	0.4531	8.445E-05	0.0001	0.000E+00	0.0000	4.380E-01	0.5320	6.035E-03	0.0073	2.063E-03	0.0025	4.058E-03	0.0049

Total Dose Contributions TDOSE(i,p,t) for Individual Radionuclides (i) and Pathways (p)
As mrem/yr and Fraction of Total Dose At t = 0.000E+00 years

Water Dependent Pathways

Radio-	Water		Fish		Radon		Plant		Meat		Milk		All Pathways*	
Nuclide	mrem/yr	fract.	mrem/yr	fract.	mrem/yr	fract.	mrem/yr	fract.	mrem/yr	fract.	mrem/yr	fract.	mrem/yr	fract.
Cs-137	0.000E+00	0.0000	0.000E+00	0.0000	0.000E+00	0.0000	0.000E+00	0.0000	0.000E+00	0.0000	0.000E+00	0.0000	8.015E-02	0.0974
Pb-210	0.000E+00	0.0000	0.000E+00	0.0000	0.000E+00	0.0000	0.000E+00	0.0000	0.000E+00	0.0000	0.000E+00	0.0000	1.036E-01	0.1259
Ra-226	0.000E+00	0.0000	0.000E+00	0.0000	0.000E+00	0.0000	0.000E+00	0.0000	0.000E+00	0.0000	0.000E+00	0.0000	3.693E-01	0.4486
Sr-90	0.000E+00	0.0000	0.000E+00	0.0000	0.000E+00	0.0000	0.000E+00	0.0000	0.000E+00	0.0000	0.000E+00	0.0000	2.702E-01	0.3282
Total	0.000E+00	0.0000	0.000E+00	0.0000	0.000E+00	0.0000	0.000E+00	0.0000	0.000E+00	0.0000	0.000E+00	0.0000	8.232E-01	1.0000

*Sum of all water independent and dependent pathways.

Total Dose Contributions TDOSE(i,p,t) for Individual Radionuclides (i) and Pathways (p)
As mrem/yr and Fraction of Total Dose At t = 1.000E+00 years

Water Independent Pathways (Inhalation excludes radon)

Radio-	Ground		Inhalation		Radon		Plant		Meat		Milk		Soil	
Nuclide	mrem/yr	fract.	mrem/yr	fract.	mrem/yr	fract.	mrem/yr	fract.	mrem/yr	fract.	mrem/yr	fract.	mrem/yr	fract.
Cs-137	7.565E-02	0.0931	6.185E-08	0.0000	0.000E+00	0.0000	2.375E-03	0.0029	2.077E-04	0.0003	6.781E-05	0.0001	1.868E-05	0.0000
Pb-210	1.560E-04	0.0002	5.025E-05	0.0001	0.000E+00	0.0000	9.654E-02	0.1188	3.300E-04	0.0004	1.608E-04	0.0002	3.037E-03	0.0037
Ra-226	2.920E-01	0.3594	2.186E-05	0.0000	0.000E+00	0.0000	7.824E-02	0.0963	2.332E-04	0.0003	2.705E-04	0.0003	7.213E-04	0.0009
Sr-90	2.547E-03	0.0031	1.179E-05	0.0000	0.000E+00	0.0000	2.529E-01	0.3113	5.108E-03	0.0063	1.516E-03	0.0019	2.652E-04	0.0003
Total	3.704E-01	0.4559	8.396E-05	0.0001	0.000E+00	0.0000	4.301E-01	0.5293	5.879E-03	0.0072	2.015E-03	0.0025	4.042E-03	0.0050

Total Dose Contributions TDOSE(i,p,t) for Individual Radionuclides (i) and Pathways (p)
As mrem/yr and Fraction of Total Dose At t = 1.000E+00 years

Water Dependent Pathways

Radio-	Water		Fish		Radon		Plant		Meat		Milk		All Pathways*	
Nuclide	mrem/yr	fract.	mrem/yr	fract.	mrem/yr	fract.	mrem/yr	fract.	mrem/yr	fract.	mrem/yr	fract.	mrem/yr	fract.
Cs-137	0.000E+00	0.0000	0.000E+00	0.0000	0.000E+00	0.0000	0.000E+00	0.0000	0.000E+00	0.0000	0.000E+00	0.0000	7.832E-02	0.0964
Pb-210	0.000E+00	0.0000	0.000E+00	0.0000	0.000E+00	0.0000	0.000E+00	0.0000	0.000E+00	0.0000	0.000E+00	0.0000	1.003E-01	0.1234
Ra-226	0.000E+00	0.0000	0.000E+00	0.0000	0.000E+00	0.0000	0.000E+00	0.0000	0.000E+00	0.0000	0.000E+00	0.0000	3.715E-01	0.4573
Sr-90	0.000E+00	0.0000	0.000E+00	0.0000	0.000E+00	0.0000	0.000E+00	0.0000	0.000E+00	0.0000	0.000E+00	0.0000	2.624E-01	0.3229
Total	0.000E+00	0.0000	0.000E+00	0.0000	0.000E+00	0.0000	0.000E+00	0.0000	0.000E+00	0.0000	0.000E+00	0.0000	8.125E-01	1.0000

*Sum of all water independent and dependent pathways.

Total Dose Contributions TDOSE(i,p,t) for Individual Radionuclides (i) and Pathways (p)
As mrem/yr and Fraction of Total Dose At t = 3.000E+00 years

Water Independent Pathways (Inhalation excludes radon)

Radio-	Ground		Inhalation		Radon		Plant		Meat		Milk		Soil	
Nuclide	mrem/yr	fract.	mrem/yr	fract.	mrem/yr	fract.	mrem/yr	fract.	mrem/yr	fract.	mrem/yr	fract.	mrem/yr	fract.
Cs-137	7.222E-02	0.0912	5.906E-08	0.0000	0.000E+00	0.0000	2.267E-03	0.0029	1.983E-04	0.0003	6.474E-05	0.0001	1.784E-05	0.0000
Pb-210	1.461E-04	0.0002	4.706E-05	0.0001	0.000E+00	0.0000	9.042E-02	0.1142	3.091E-04	0.0004	1.506E-04	0.0002	2.845E-03	0.0036
Ra-226	2.904E-01	0.3669	2.476E-05	0.0000	0.000E+00	0.0000	8.360E-02	0.1056	2.517E-04	0.0003	2.786E-04	0.0004	8.995E-04	0.0011
Sr-90	2.401E-03	0.0030	1.112E-05	0.0000	0.000E+00	0.0000	2.385E-01	0.3013	4.817E-03	0.0061	1.430E-03	0.0018	2.501E-04	0.0003
Total	3.652E-01	0.4613	8.299E-05	0.0001	0.000E+00	0.0000	4.148E-01	0.5240	5.576E-03	0.0070	1.924E-03	0.0024	4.012E-03	0.0051

Total Dose Contributions TDOSE(i,p,t) for Individual Radionuclides (i) and Pathways (p)
As mrem/yr and Fraction of Total Dose At t = 3.000E+00 years

Water Dependent Pathways

Radio-	Water		Fish		Radon		Plant		Meat		Milk		All Pathways*	
Nuclide	mrem/yr	fract.	mrem/yr	fract.	mrem/yr	fract.	mrem/yr	fract.	mrem/yr	fract.	mrem/yr	fract.	mrem/yr	fract.
Cs-137	0.000E+00	0.0000	0.000E+00	0.0000	0.000E+00	0.0000	0.000E+00	0.0000	0.000E+00	0.0000	0.000E+00	0.0000	7.477E-02	0.0945
Pb-210	0.000E+00	0.0000	0.000E+00	0.0000	0.000E+00	0.0000	0.000E+00	0.0000	0.000E+00	0.0000	0.000E+00	0.0000	9.391E-02	0.1186
Ra-226	0.000E+00	0.0000	0.000E+00	0.0000	0.000E+00	0.0000	0.000E+00	0.0000	0.000E+00	0.0000	0.000E+00	0.0000	3.754E-01	0.4743
Sr-90	0.000E+00	0.0000	0.000E+00	0.0000	0.000E+00	0.0000	0.000E+00	0.0000	0.000E+00	0.0000	0.000E+00	0.0000	2.474E-01	0.3126
Total	0.000E+00	0.0000	0.000E+00	0.0000	0.000E+00	0.0000	0.000E+00	0.0000	0.000E+00	0.0000	0.000E+00	0.0000	7.915E-01	1.0000

*Sum of all water independent and dependent pathways.

Total Dose Contributions TDOSE(i,p,t) for Individual Radionuclides (i) and Pathways (p)
As mrem/yr and Fraction of Total Dose At t = 1.000E+01 years

Water Independent Pathways (Inhalation excludes radon)

Radio-	Ground		Inhalation		Radon		Plant		Meat		Milk		Soil	
Nuclide	mrem/yr	fract.	mrem/yr	fract.	mrem/yr	fract.	mrem/yr	fract.	mrem/yr	fract.	mrem/yr	fract.	mrem/yr	fract.
Cs-137	6.142E-02	0.0846	5.022E-08	0.0000	0.000E+00	0.0000	1.928E-03	0.0027	1.686E-04	0.0002	5.506E-05	0.0001	1.517E-05	0.0000
Pb-210	1.162E-04	0.0002	3.742E-05	0.0001	0.000E+00	0.0000	7.189E-02	0.0990	2.458E-04	0.0003	1.198E-04	0.0002	2.262E-03	0.0031
Ra-226	2.848E-01	0.3922	3.333E-05	0.0000	0.000E+00	0.0000	9.937E-02	0.1369	3.063E-04	0.0004	3.022E-04	0.0004	1.430E-03	0.0020
Sr-90	1.956E-03	0.0027	9.053E-06	0.0000	0.000E+00	0.0000	1.943E-01	0.2676	3.923E-03	0.0054	1.165E-03	0.0016	2.037E-04	0.0003
Total	3.483E-01	0.4797	7.986E-05	0.0001	0.000E+00	0.0000	3.675E-01	0.5061	4.644E-03	0.0064	1.642E-03	0.0023	3.910E-03	0.0054

Total Dose Contributions TDOSE(i,p,t) for Individual Radionuclides (i) and Pathways (p)
As mrem/yr and Fraction of Total Dose At t = 1.000E+01 years

Water Dependent Pathways

Radio-	Water		Fish		Radon		Plant		Meat		Milk		All Pathways*	
Nuclide	mrem/yr	fract.	mrem/yr	fract.	mrem/yr	fract.	mrem/yr	fract.	mrem/yr	fract.	mrem/yr	fract.	mrem/yr	fract.
Cs-137	0.000E+00	0.0000	0.000E+00	0.0000	0.000E+00	0.0000	0.000E+00	0.0000	0.000E+00	0.0000	0.000E+00	0.0000	6.359E-02	0.0876
Pb-210	0.000E+00	0.0000	0.000E+00	0.0000	0.000E+00	0.0000	0.000E+00	0.0000	0.000E+00	0.0000	0.000E+00	0.0000	7.468E-02	0.1029
Ra-226	0.000E+00	0.0000	0.000E+00	0.0000	0.000E+00	0.0000	0.000E+00	0.0000	0.000E+00	0.0000	0.000E+00	0.0000	3.862E-01	0.5320
Sr-90	0.000E+00	0.0000	0.000E+00	0.0000	0.000E+00	0.0000	0.000E+00	0.0000	0.000E+00	0.0000	0.000E+00	0.0000	2.015E-01	0.2776
Total	0.000E+00	0.0000	0.000E+00	0.0000	0.000E+00	0.0000	0.000E+00	0.0000	0.000E+00	0.0000	0.000E+00	0.0000	7.260E-01	1.0000

*Sum of all water independent and dependent pathways.

Total Dose Contributions TDOSE(i,p,t) for Individual Radionuclides (i) and Pathways (p)
As mrem/yr and Fraction of Total Dose At t = 3.000E+01 years

Water Independent Pathways (Inhalation excludes radon)

Radio-	Ground		Inhalation		Radon		Plant		Meat		Milk		Soil	
Nuclide	mrem/yr	fract.	mrem/yr	fract.	mrem/yr	fract.	mrem/yr	fract.	mrem/yr	fract.	mrem/yr	fract.	mrem/yr	fract.
Cs-137	3.867E-02	0.0656	3.162E-08	0.0000	0.000E+00	0.0000	1.214E-03	0.0021	1.061E-04	0.0002	3.466E-05	0.0001	9.549E-06	0.0000
Pb-210	6.035E-05	0.0001	1.944E-05	0.0000	0.000E+00	0.0000	3.735E-02	0.0634	1.277E-04	0.0002	6.221E-05	0.0001	1.175E-03	0.0020
Ra-226	2.693E-01	0.4571	4.806E-05	0.0001	0.000E+00	0.0000	1.257E-01	0.2135	3.982E-04	0.0007	3.386E-04	0.0006	2.352E-03	0.0040
Sr-90	1.088E-03	0.0018	5.036E-06	0.0000	0.000E+00	0.0000	1.081E-01	0.1835	2.183E-03	0.0037	6.479E-04	0.0011	1.133E-04	0.0002
Total	3.091E-01	0.5247	7.257E-05	0.0001	0.000E+00	0.0000	2.724E-01	0.4624	2.815E-03	0.0048	1.083E-03	0.0018	3.650E-03	0.0062

Total Dose Contributions TDOSE(i,p,t) for Individual Radionuclides (i) and Pathways (p)
As mrem/yr and Fraction of Total Dose At t = 3.000E+01 years

Water Dependent Pathways

Radio-	Water		Fish		Radon		Plant		Meat		Milk		All Pathways*	
Nuclide	mrem/yr	fract.	mrem/yr	fract.	mrem/yr	fract.	mrem/yr	fract.	mrem/yr	fract.	mrem/yr	fract.	mrem/yr	fract.
Cs-137	0.000E+00	0.0000	0.000E+00	0.0000	0.000E+00	0.0000	0.000E+00	0.0000	0.000E+00	0.0000	0.000E+00	0.0000	4.003E-02	0.0680
Pb-210	0.000E+00	0.0000	0.000E+00	0.0000	0.000E+00	0.0000	0.000E+00	0.0000	0.000E+00	0.0000	0.000E+00	0.0000	3.879E-02	0.0659
Ra-226	0.000E+00	0.0000	0.000E+00	0.0000	0.000E+00	0.0000	0.000E+00	0.0000	0.000E+00	0.0000	0.000E+00	0.0000	3.981E-01	0.6759
Sr-90	0.000E+00	0.0000	0.000E+00	0.0000	0.000E+00	0.0000	0.000E+00	0.0000	0.000E+00	0.0000	0.000E+00	0.0000	1.121E-01	0.1903
Total	0.000E+00	0.0000	0.000E+00	0.0000	0.000E+00	0.0000	0.000E+00	0.0000	0.000E+00	0.0000	0.000E+00	0.0000	5.891E-01	1.0000

*Sum of all water independent and dependent pathways.

Total Dose Contributions TDOSE(i,p,t) for Individual Radionuclides (i) and Pathways (p)
As mrem/yr and Fraction of Total Dose At t = 1.000E+02 years

Water Independent Pathways (Inhalation excludes radon)

Radio-	Ground		Inhalation		Radon		Plant		Meat		Milk		Soil	
Nuclide	mrem/yr	fract.	mrem/yr	fract.	mrem/yr	fract.	mrem/yr	fract.	mrem/yr	fract.	mrem/yr	fract.	mrem/yr	fract.
Cs-137	7.653E-03	0.0200	6.258E-09	0.0000	0.000E+00	0.0000	2.403E-04	0.0006	2.101E-05	0.0001	6.860E-06	0.0000	1.890E-06	0.0000
Pb-210	6.098E-06	0.0000	1.964E-06	0.0000	0.000E+00	0.0000	3.774E-03	0.0099	1.290E-05	0.0000	6.286E-06	0.0000	1.187E-04	0.0003
Ra-226	2.213E-01	0.5787	5.403E-05	0.0001	0.000E+00	0.0000	1.312E-01	0.3432	4.227E-04	0.0011	3.248E-04	0.0008	2.811E-03	0.0074
Sr-90	1.398E-04	0.0004	6.468E-07	0.0000	0.000E+00	0.0000	1.388E-02	0.0363	2.803E-04	0.0007	8.321E-05	0.0002	1.456E-05	0.0000
Total	2.291E-01	0.5991	5.665E-05	0.0001	0.000E+00	0.0000	1.491E-01	0.3900	7.369E-04	0.0019	4.211E-04	0.0011	2.946E-03	0.0077

Total Dose Contributions TDOSE(i,p,t) for Individual Radionuclides (i) and Pathways (p)
As mrem/yr and Fraction of Total Dose At t = 1.000E+02 years

Water Dependent Pathways

Radio-	Water		Fish		Radon		Plant		Meat		Milk		All Pathways*	
Nuclide	mrem/yr	fract.	mrem/yr	fract.	mrem/yr	fract.	mrem/yr	fract.	mrem/yr	fract.	mrem/yr	fract.	mrem/yr	fract.
Cs-137	0.000E+00	0.0000	0.000E+00	0.0000	0.000E+00	0.0000	0.000E+00	0.0000	0.000E+00	0.0000	0.000E+00	0.0000	7.923E-03	0.0207
Pb-210	0.000E+00	0.0000	0.000E+00	0.0000	0.000E+00	0.0000	0.000E+00	0.0000	0.000E+00	0.0000	0.000E+00	0.0000	3.920E-03	0.0103
Ra-226	0.000E+00	0.0000	0.000E+00	0.0000	0.000E+00	0.0000	0.000E+00	0.0000	0.000E+00	0.0000	0.000E+00	0.0000	3.561E-01	0.9314
Sr-90	0.000E+00	0.0000	0.000E+00	0.0000	0.000E+00	0.0000	0.000E+00	0.0000	0.000E+00	0.0000	0.000E+00	0.0000	1.440E-02	0.0377
Total	0.000E+00	0.0000	0.000E+00	0.0000	0.000E+00	0.0000	0.000E+00	0.0000	0.000E+00	0.0000	0.000E+00	0.0000	3.824E-01	1.0000

*Sum of all water independent and dependent pathways.

Total Dose Contributions TDOSE(i,p,t) for Individual Radionuclides (i) and Pathways (p)
As mrem/yr and Fraction of Total Dose At t = 3.000E+02 years

Water Independent Pathways (Inhalation excludes radon)

Radio-	Ground		Inhalation		Radon		Plant		Meat		Milk		Soil	
Nuclide	mrem/yr	fract.	mrem/yr	fract.	mrem/yr	fract.	mrem/yr	fract.	mrem/yr	fract.	mrem/yr	fract.	mrem/yr	fract.
Cs-137	7.479E-05	0.0004	6.115E-11	0.0000	0.000E+00	0.0000	2.348E-06	0.0000	2.053E-07	0.0000	6.704E-08	0.0000	1.847E-08	0.0000
Pb-210	8.728E-09	0.0000	2.811E-09	0.0000	0.000E+00	0.0000	5.401E-06	0.0000	1.847E-08	0.0000	8.997E-09	0.0000	1.699E-07	0.0000
Ra-226	1.262E-01	0.6139	3.198E-05	0.0002	0.000E+00	0.0000	7.710E-02	0.3750	2.487E-04	0.0012	1.890E-04	0.0009	1.674E-03	0.0081
Sr-90	3.969E-07	0.0000	1.837E-09	0.0000	0.000E+00	0.0000	3.942E-05	0.0002	7.961E-07	0.0000	2.363E-07	0.0000	4.134E-08	0.0000
Total	1.263E-01	0.6143	3.198E-05	0.0002	0.000E+00	0.0000	7.714E-02	0.3752	2.498E-04	0.0012	1.893E-04	0.0009	1.674E-03	0.0081

Total Dose Contributions TDOSE(i,p,t) for Individual Radionuclides (i) and Pathways (p)
As mrem/yr and Fraction of Total Dose At t = 3.000E+02 years

Water Dependent Pathways

Radio-	Water		Fish		Radon		Plant		Meat		Milk		All Pathways*	
Nuclide	mrem/yr	fract.	mrem/yr	fract.	mrem/yr	fract.	mrem/yr	fract.	mrem/yr	fract.	mrem/yr	fract.	mrem/yr	fract.
Cs-137	0.000E+00	0.0000	0.000E+00	0.0000	0.000E+00	0.0000	0.000E+00	0.0000	0.000E+00	0.0000	0.000E+00	0.0000	7.742E-05	0.0004
Pb-210	0.000E+00	0.0000	0.000E+00	0.0000	0.000E+00	0.0000	0.000E+00	0.0000	0.000E+00	0.0000	0.000E+00	0.0000	5.610E-06	0.0000
Ra-226	0.000E+00	0.0000	0.000E+00	0.0000	0.000E+00	0.0000	0.000E+00	0.0000	0.000E+00	0.0000	0.000E+00	0.0000	2.055E-01	0.9993
Sr-90	1.841E-05	0.0001	9.341E-09	0.0000	0.000E+00	0.0000	4.792E-07	0.0000	4.979E-08	0.0000	2.718E-08	0.0000	5.987E-05	0.0003
Total	1.841E-05	0.0001	9.341E-09	0.0000	0.000E+00	0.0000	4.792E-07	0.0000	4.979E-08	0.0000	2.718E-08	0.0000	2.056E-01	1.0000

*Sum of all water independent and dependent pathways.

Total Dose Contributions TDOSE(i,p,t) for Individual Radionuclides (i) and Pathways (p)
As mrem/yr and Fraction of Total Dose At t = 1.000E+03 years

Water Independent Pathways (Inhalation excludes radon)

Radio-	Ground		Inhalation		Radon		Plant		Meat		Milk		Soil	
Nuclide	mrem/yr	fract.	mrem/yr	fract.	mrem/yr	fract.	mrem/yr	fract.	mrem/yr	fract.	mrem/yr	fract.	mrem/yr	fract.
Cs-137	6.899E-12	0.0000	5.641E-18	0.0000	0.000E+00	0.0000	2.166E-13	0.0000	1.894E-14	0.0000	6.184E-15	0.0000	1.704E-15	0.0000
Pb-210	9.681E-19	0.0000	3.118E-19	0.0000	0.000E+00	0.0000	5.991E-16	0.0000	2.048E-18	0.0000	9.980E-19	0.0000	1.885E-17	0.0000
Ra-226	1.769E-02	0.1405	4.483E-06	0.0000	0.000E+00	0.0000	1.081E-02	0.0858	3.487E-05	0.0003	2.649E-05	0.0002	2.346E-04	0.0019
Sr-90	4.847E-16	0.0000	2.243E-18	0.0000	0.000E+00	0.0000	4.814E-14	0.0000	9.721E-16	0.0000	2.886E-16	0.0000	5.048E-17	0.0000
Total	1.769E-02	0.1405	4.483E-06	0.0000	0.000E+00	0.0000	1.081E-02	0.0858	3.487E-05	0.0003	2.649E-05	0.0002	2.346E-04	0.0019

Total Dose Contributions TDOSE(i,p,t) for Individual Radionuclides (i) and Pathways (p)
As mrem/yr and Fraction of Total Dose At t = 1.000E+03 years

Water Dependent Pathways

Radio-	Water		Fish		Radon		Plant		Meat		Milk		All Pathways*	
Nuclide	mrem/yr	fract.	mrem/yr	fract.	mrem/yr	fract.	mrem/yr	fract.	mrem/yr	fract.	mrem/yr	fract.	mrem/yr	fract.
Cs-137	0.000E+00	0.0000	0.000E+00	0.0000	0.000E+00	0.0000	0.000E+00	0.0000	0.000E+00	0.0000	0.000E+00	0.0000	7.142E-12	0.0000
Pb-210	1.889E-15	0.0000	3.959E-18	0.0000	0.000E+00	0.0000	4.572E-17	0.0000	5.080E-19	0.0000	4.170E-19	0.0000	2.562E-15	0.0000
Ra-226	9.466E-02	0.7513	1.694E-04	0.0013	0.000E+00	0.0000	2.295E-03	0.0182	2.682E-05	0.0002	3.092E-05	0.0002	1.260E-01	1.0000
Sr-90	3.000E-13	0.0000	1.522E-16	0.0000	0.000E+00	0.0000	7.811E-15	0.0000	8.127E-16	0.0000	4.431E-16	0.0000	3.592E-13	0.0000
Total	9.466E-02	0.7513	1.694E-04	0.0013	0.000E+00	0.0000	2.295E-03	0.0182	2.682E-05	0.0002	3.092E-05	0.0002	1.260E-01	1.0000

*Sum of all water independent and dependent pathways.

Dose/Source Ratios Summed Over All Pathways
Parent and Progeny Principal Radionuclide Contributions Indicated

Parent (i)	Product (j)	Thread Fraction	DSR(j,t) At Time in Years (mrem/yr)/(pCi/g) 0.000E+00	1.000E+00	3.000E+00	1.000E+01	3.000E+01	1.000E+02	3.000E+02	1.000E+03
Cs-137+D	Cs-137+D	1.000E+00	1.781E+00	1.740E+00	1.662E+00	1.413E+00	8.896E-01	1.761E-01	1.721E-03	1.587E-10
Pb-210+D	Pb-210+D	1.000E+00	2.031E+00	1.966E+00	1.841E+00	1.464E+00	7.606E-01	7.686E-02	1.100E-04	5.024E-14
Ra-226+D	Ra-226+D	1.000E+00	7.204E+00	7.184E+00	7.144E+00	7.005E+00	6.622E+00	5.441E+00	3.104E+00	8.260E-01
Ra-226+D	Pb-210+D	1.000E+00	3.740E-02	1.003E-01	2.177E-01	5.679E-01	1.184E+00	1.542E+00	9.251E-01	1.644E+00
Ra-226+D	∑DSR(j)		7.242E+00	7.284E+00	7.362E+00	7.573E+00	7.807E+00	6.983E+00	4.029E+00	2.470E+00
Sr-90+D	Sr-90+D	1.000E+00	1.280E+00	1.243E+00	1.173E+00	9.550E-01	5.313E-01	6.824E-02	2.838E-04	1.702E-12

The DSR includes contributions from associated (half-life ≤ 180 days) daughters.

Single Radionuclide Soil Guidelines G(i,t) in pCi/g
Basic Radiation Dose Limit = 2.500E+01 mrem/yr

Nuclide (i)	t= 0.000E+00	1.000E+00	3.000E+00	1.000E+01	3.000E+01	1.000E+02	3.000E+02	1.000E+03
Cs-137	1.404E+01	1.437E+01	1.505E+01	1.769E+01	2.810E+01	1.420E+02	1.453E+04	1.575E+11
Pb-210	1.231E+01	1.272E+01	1.358E+01	1.707E+01	3.287E+01	3.253E+02	2.273E+05	*7.634E+13
Ra-226	3.452E+00	3.432E+00	3.396E+00	3.301E+00	3.202E+00	3.580E+00	6.205E+00	1.012E+01
Sr-90	1.953E+01	2.011E+01	2.132E+01	2.618E+01	4.705E+01	3.664E+02	8.810E+04	1.469E+13

*At specific activity limit

Summed Dose/Source Ratios DSR(i,t) in (mrem/yr)/(pCi/g)
and Single Radionuclide Soil Guidelines G(i,t) in pCi/g
at tmin = time of minimum single radionuclide soil guideline
and at tmax = time of maximum total dose = 0.000E+00 years

Nuclide (i)	Initial (pCi/g)	tmin (years)	DSR(i,tmin)	G(i,tmin) (pCi/g)	DSR(i,tmax)	G(i,tmax) (pCi/g)
Cs-137	4.500E-02	0.000E+00	1.781E+00	1.404E+01	1.781E+00	1.404E+01
Pb-210	5.100E-02	0.000E+00	2.031E+00	1.231E+01	2.031E+00	1.231E+01
Ra-226	5.100E-02	32.34 ± 0.06	7.809E+00	3.202E+00	7.242E+00	3.452E+00
Sr-90	2.110E-01	0.000E+00	1.280E+00	1.953E+01	1.280E+00	1.953E+01

Individual Nuclide Dose Summed Over All Pathways
Parent Nuclide and Branch Fraction Indicated

Nuclide (j)	Parent (i)	THF(i)	DOSE(j,t), mrem/yr t= 0.000E+00	1.000E+00	3.000E+00	1.000E+01	3.000E+01	1.000E+02	3.000E+02	1.000E+03
Cs-137	Cs-137	1.000E+00	8.015E-02	7.832E-02	7.477E-02	6.359E-02	4.003E-02	7.923E-03	7.742E-05	7.142E-12
Pb-210	Pb-210	1.000E+00	1.036E-01	1.003E-01	9.391E-02	7.468E-02	3.879E-02	3.920E-03	5.610E-06	2.562E-15
Pb-210	Ra-226	1.000E+00	1.907E-03	5.115E-03	1.110E-02	2.896E-02	6.040E-02	7.865E-02	4.718E-02	8.386E-02
Pb-210	∑DOSE(j)		1.055E-01	1.054E-01	1.050E-01	1.036E-01	9.920E-02	8.257E-02	4.718E-02	8.386E-02
Ra-226	Ra-226	1.000E+00	3.674E-01	3.664E-01	3.643E-01	3.572E-01	3.377E-01	2.775E-01	1.583E-01	4.212E-02
Sr-90	Sr-90	1.000E+00	2.702E-01	2.624E-01	2.474E-01	2.015E-01	1.121E-01	1.440E-02	5.987E-05	3.592E-13

THF(i) is the thread fraction of the parent nuclide.

Individual Nuclide Soil Concentration
Parent Nuclide and Branch Fraction Indicated

Nuclide (j)	Parent (i)	THF(i)	S(j,t), pCi/g t= 0.000E+00	1.000E+00	3.000E+00	1.000E+01	3.000E+01	1.000E+02	3.000E+02	1.000E+03
Cs-137	Cs-137	1.000E+00	4.500E-02	4.397E-02	4.198E-02	3.570E-02	2.248E-02	4.448E-03	4.347E-05	4.010E-12
Pb-210	Pb-210	1.000E+00	5.100E-02	4.936E-02	4.623E-02	3.676E-02	1.910E-02	1.929E-03	2.762E-06	3.063E-16
Pb-210	Ra-226	1.000E+00	0.000E+00	1.557E-03	4.510E-03	1.332E-02	2.885E-02	3.799E-02	2.281E-02	3.198E-03
Pb-210	∑S(j):		5.100E-02	5.091E-02	5.074E-02	5.008E-02	4.794E-02	3.992E-02	2.281E-02	3.198E-03
Ra-226	Ra-226	1.000E+00	5.100E-02	5.086E-02	5.057E-02	4.959E-02	4.688E-02	3.852E-02	2.197E-02	3.080E-03
Sr-90	Sr-90	1.000E+00	2.110E-01	2.049E-01	1.932E-01	1.574E-01	8.756E-02	1.124E-02	3.194E-05	3.900E-14

THF(i) is the thread fraction of the parent nuclide.

RESCALC.EXE execution time = 0.50 seconds

Table of Contents

Part III: Intake Quantities and Health Risk Factors

Cancer Risk Slope Factors 2
Risk Slope and ETFG for the Ground Pathway 3
Amount of Intake Quantities and Excess Cancer Risks
Time= 0.000E+00 4
Time= 1.000E+00 7
Time= 3.000E+00 10
Time= 1.000E+01 13
Time= 3.000E+01 16
Time= 1.000E+02 19
Time= 3.000E+02 22
Time= 1.000E+03 25

Cancer Risk Slope Factors Summary Table
Risk Library: FGR 13 Morbidity

Menu	Parameter	Current Value	Base Case*	Parameter Name
Sf-1	Ground external radiation slope factors, 1/yr per (pCi/g):			
Sf-1	Cs-137+D	2.55E-06	5.32E-10	SLPF(1,1)
Sf-1	Pb-210+D	4.21E-09	1.41E-09	SLPF(2,1)
Sf-1	Ra-226+D	8.49E-06	2.29E-08	SLPF(3,1)
Sf-1	Sr-90+D	1.96E-08	4.82E-10	SLPF(4,1)
Sf-2	Inhalation, slope factors, 1/(pCi):			
Sf-2	Cs-137+D	1.12E-10	1.12E-10	SLPF(1,2)
Sf-2	Pb-210+D	3.08E-08	1.58E-08	SLPF(2,2)
Sf-2	Ra-226+D	2.83E-08	2.82E-08	SLPF(3,2)
Sf-2	Sr-90+D	4.33E-10	4.25E-10	SLPF(4,2)
Sf-3	Food ingestion, slope factors, 1/(pCi):			
Sf-3	Cs-137+D	3.74E-11	3.74E-11	SLPF(1,3)
Sf-3	Pb-210+D	3.44E-09	1.18E-09	SLPF(2,3)
Sf-3	Ra-226+D	5.15E-10	5.14E-10	SLPF(3,3)
Sf-3	Sr-90+D	9.53E-11	6.88E-11	SLPF(4,3)
Sf-3	Water ingestion, slope factors, 1/(pCi):			
Sf-3	Cs-137+D	3.04E-11	3.04E-11	SLPF(1,4)
Sf-3	Pb-210+D	2.66E-09	8.81E-10	SLPF(2,4)
Sf-3	Ra-226+D	3.86E-10	3.85E-10	SLPF(3,4)
Sf-3	Sr-90+D	7.40E-11	5.59E-11	SLPF(4,4)
Sf-3	Soil ingestion, slope factors, 1/(pCi):			
Sf-3	Cs-137+D	3.74E-11	3.74E-11	SLPF(1,5)
Sf-3	Pb-210+D	3.44E-09	1.18E-09	SLPF(2,5)
Sf-3	Ra-226+D	5.15E-10	5.14E-10	SLPF(3,5)
Sf-3	Sr-90+D	9.53E-11	6.88E-11	SLPF(4,5)
Sf-Rn	Radon Inhalation slope factors, 1/(pCi):			
Sf-Rn	Rn-222	1.80E-12	1.80E-12	SLPFRN(1,1)
Sf-Rn	Po-218	3.70E-12	3.70E-12	SLPFRN(1,2)
Sf-Rn	Pb-214	6.20E-12	6.20E-12	SLPFRN(1,3)
Sf-Rn	Bi-214	1.50E-11	1.50E-11	SLPFRN(1,4)
Sf-Rn	Radon K factors, (mrem/WLM):			
Sf-Rn	Rn-222 Indoor	7.60E+02	7.60E+02	KFACTR(1,1)
Sf-Rn	Rn-222 Outdoor	5.70E+02	5.70E+02	KFACTR(1,2)

*Base Case means Default.Lib w/o Associate Nuclide contributions.

Risk Slope and Environmental Transport Factors for the Ground Pathway

Nuclide (i)	Slope(i)*	ETFG(i,t) At Time in Years (dimensionless) t= 0.000E+00	1.000E+00	3.000E+00	1.000E+01	3.000E+01	1.000E+02	3.000E+02	1.000E+03
At-218	3.570E-09	5.326E-01	5.326E-01	5.326E-01	5.326E-01	5.326E-01	5.326E-01	5.326E-01	5.326E-01
Ba-137m	2.690E-06	5.101E-01	5.101E-01	5.101E-01	5.101E-01	5.101E-01	5.101E-01	5.101E-01	5.101E-01
Bi-210	2.760E-09	5.212E-01	5.212E-01	5.212E-01	5.212E-01	5.212E-01	5.212E-01	5.212E-01	5.212E-01
Bi-214	7.480E-06	5.131E-01	5.131E-01	5.131E-01	5.131E-01	5.131E-01	5.131E-01	5.131E-01	5.131E-01
Cs-137	5.320E-10	5.290E-01	5.290E-01	5.290E-01	5.290E-01	5.290E-01	5.290E-01	5.290E-01	5.290E-01
Pb-210	1.410E-09	5.338E-01	5.338E-01	5.338E-01	5.338E-01	5.338E-01	5.338E-01	5.338E-01	5.338E-01
Pb-214	9.820E-07	5.210E-01	5.210E-01	5.210E-01	5.210E-01	5.210E-01	5.210E-01	5.210E-01	5.210E-01
Po-210	3.950E-11	5.118E-01	5.118E-01	5.118E-01	5.118E-01	5.118E-01	5.118E-01	5.118E-01	5.118E-01
Po-214	3.860E-10	5.101E-01	5.101E-01	5.101E-01	5.101E-01	5.101E-01	5.101E-01	5.101E-01	5.101E-01
Po-218	4.260E-11	5.118E-01	5.118E-01	5.118E-01	5.118E-01	5.118E-01	5.118E-01	5.118E-01	5.118E-01
Ra-226	2.290E-08	5.317E-01	5.317E-01	5.317E-01	5.317E-01	5.317E-01	5.317E-01	5.317E-01	5.317E-01
Rn-222	1.740E-09	5.109E-01	5.109E-01	5.109E-01	5.109E-01	5.109E-01	5.109E-01	5.109E-01	5.109E-01
Sr-90	4.820E-10	5.315E-01	5.315E-01	5.315E-01	5.315E-01	5.315E-01	5.315E-01	5.315E-01	5.315E-01
Tl-210	0.000E+00	6.000E-01	6.000E-01	6.000E-01	6.000E-01	6.000E-01	6.000E-01	6.000E-01	6.000E-01
Y-90	1.910E-08	5.118E-01	5.118E-01	5.118E-01	5.118E-01	5.118E-01	5.118E-01	5.118E-01	5.118E-01

* - Units are 1/yr per (pCi/g) at infinite depth and area. Multiplication by ETFG(i,t) converts to site conditions.

Amount of Intake Quantities QINT(i,p,t) for Individual Radionuclides (i) and Pathways (p)
As pCi/yr at t= 0.000E+00 years

Radio-	Water Independent Pathways (Inhalation w/o radon)					Water Dependent Pathways					Total
Nuclide	Inhalation	Plant	Meat	Milk	Soil	Water	Fish	Plant	Meat	Milk	Ingestion*
Cs-137	2.007E-03	4.917E+01	4.300E+00	1.404E+00	3.868E-01	0.000E+00	0.000E+00	0.000E+00	0.000E+00	0.000E+00	5.526E+01
Pb-210	2.275E-03	1.393E+01	4.763E-02	2.321E-02	4.384E-01	0.000E+00	0.000E+00	0.000E+00	0.000E+00	0.000E+00	1.444E+01
Ra-226	2.275E-03	5.573E+01	1.624E-01	1.989E-01	4.384E-01	0.000E+00	0.000E+00	0.000E+00	0.000E+00	0.000E+00	5.653E+01
Sr-90	9.413E-03	1.729E+03	3.490E+01	1.036E+01	1.814E+00	0.000E+00	0.000E+00	0.000E+00	0.000E+00	0.000E+00	1.776E+03

* Sum of all ingestion pathways, i.e. water independent plant, meat, milk, soil
and water-dependent water, fish, plant, meat, milk pathways

Amount of Intake Quantities QINT9(irn,i,t) and QINT9W(irn,i,t) for Inhalation of
Radon and its Decay Products as pCi/yr at t= 0.000E+00 years

Radon	Radionuclides							
Pathway	Rn-222	Po-218	Pb-214	Bi-214	Rn-220	Po-216	Pb-212	Bi-212
Water-ind.	0.000E+00	0.000E+00	0.000E+00	0.000E+00	0.000E+00	0.000E+00	0.000E+00	0.000E+00
Water-dep.	0.000E+00	0.000E+00	0.000E+00	0.000E+00	0.000E+00	0.000E+00	0.000E+00	0.000E+00
Total	0.000E+00	0.000E+00	0.000E+00	0.000E+00	0.000E+00	0.000E+00	0.000E+00	0.000E+00

Water-ind. == Water-independent Water-dep. == Water-dependent

Excess Cancer Risks CNRS(i,p,t) for Individual Radionuclides (i) and Pathways (p)
and Fraction of Total Risk at t= 0.000E+00 years

Water Independent Pathways (Inhalation excludes radon)

Radio-	Ground		Inhalation		Plant		Meat		Milk		Soil	
Nuclide	risk	fract.	risk	fract.	risk	fract.	risk	fract.	risk	fract.	risk	fract.
Cs-137	1.264E-06	0.0941	4.863E-12	0.0000	3.978E-08	0.0030	3.479E-09	0.0003	1.136E-09	0.0001	3.129E-10	0.0000
Pb-210	3.286E-09	0.0002	2.039E-09	0.0002	1.402E-06	0.1044	4.826E-09	0.0004	2.343E-09	0.0002	4.398E-08	0.0033
Ra-226	6.402E-06	0.4767	1.851E-09	0.0001	8.254E-07	0.0615	2.407E-09	0.0002	2.947E-09	0.0002	6.493E-09	0.0005
Sr-90	4.223E-08	0.0031	8.140E-11	0.0000	3.289E-06	0.2449	6.641E-08	0.0049	1.972E-08	0.0015	3.449E-09	0.0003
Total	7.711E-06	0.5742	3.976E-09	0.0003	5.556E-06	0.4138	7.713E-08	0.0057	2.614E-08	0.0019	5.424E-08	0.0040

Excess Cancer Risks CNRS(i,p,t) for Individual Radionuclides (i) and Pathways (p)
and Fraction of Total Risk at t= 0.000E+00 years

Water Dependent Pathways

Radio-	Water		Fish		Plant		Meat		Milk		All Pathways**	
Nuclide	risk	fract.	risk	fract.	risk	fract.	risk	fract.	risk	fract.	risk	fract.
Cs-137	0.000E+00	0.0000	0.000E+00	0.0000	0.000E+00	0.0000	0.000E+00	0.0000	0.000E+00	0.0000	1.308E-06	0.0974
Pb-210	0.000E+00	0.0000	0.000E+00	0.0000	0.000E+00	0.0000	0.000E+00	0.0000	0.000E+00	0.0000	1.459E-06	0.1086
Ra-226	0.000E+00	0.0000	0.000E+00	0.0000	0.000E+00	0.0000	0.000E+00	0.0000	0.000E+00	0.0000	7.241E-06	0.5392
Sr-90	0.000E+00	0.0000	0.000E+00	0.0000	0.000E+00	0.0000	0.000E+00	0.0000	0.000E+00	0.0000	3.421E-06	0.2547
Total	0.000E+00	0.0000	0.000E+00	0.0000	0.000E+00	0.0000	0.000E+00	0.0000	0.000E+00	0.0000	1.343E-05	1.0000

** Sum of water independent ground, inhalation, plant, meat, milk, soil
and water dependent water, fish, plant, meat, milk pathways

Excess Cancer Risks CNRS9(irn,i,t) and CNRS9W(irn,i,t) for Inhalation of
Radon and its Decay Products at t= 0.000E+00 years

Radon	Radionuclides							
Pathway	Rn-222	Po-218	Pb-214	Bi-214	Rn-220	Po-216	Pb-212	Bi-212
Water-ind.	0.000E+00	0.000E+00	0.000E+00	0.000E+00	0.000E+00	0.000E+00	0.000E+00	0.000E+00
Water-dep.	0.000E+00	0.000E+00	0.000E+00	0.000E+00	0.000E+00	0.000E+00	0.000E+00	0.000E+00
Total	0.000E+00	0.000E+00	0.000E+00	0.000E+00	0.000E+00	0.000E+00	0.000E+00	0.000E+00

Water-ind. == Water-independent Water-dep. == Water-dependent

Total Excess Cancer Risk CNRS(i,p,t)*** for Initially Existent Radionuclides (i) and Pathways (p)
and Fraction of Total Risk at t= 0.000E+00 years

Water Independent Pathways (Inhalation excludes radon)

Radio-	Ground		Inhalation		Radon		Plant		Meat		Milk		Soil	
Nuclide	risk	fract.	risk	fract.	risk	fract.	risk	fract.	risk	fract.	risk	fract.	risk	fract.
Cs-137	1.264E-06	0.0941	4.863E-12	0.0000	0.000E+00	0.0000	3.978E-08	0.0030	3.479E-09	0.0003	1.136E-09	0.0001	3.129E-10	0.0000
Pb-210	2.155E-09	0.0002	1.337E-09	0.0001	0.000E+00	0.0000	9.165E-07	0.0682	3.133E-09	0.0002	1.527E-09	0.0001	2.884E-08	0.0021
Ra-226	6.403E-06	0.4768	2.553E-09	0.0002	0.000E+00	0.0000	1.311E-06	0.0976	4.099E-09	0.0003	3.763E-09	0.0003	2.164E-08	0.0016
Sr-90	4.223E-08	0.0031	8.140E-11	0.0000	0.000E+00	0.0000	3.289E-06	0.2449	6.641E-08	0.0049	1.972E-08	0.0015	3.449E-09	0.0003
Total	7.711E-06	0.5742	3.976E-09	0.0003	0.000E+00	0.0000	5.556E-06	0.4138	7.713E-08	0.0057	2.614E-08	0.0019	5.424E-08	0.0040

Total Excess Cancer Risk CNRS(i,p,t)*** for Initially Existent Radionuclides (i) and Pathways (p)
and Fraction of Total Risk at t= 0.000E+00 years

Water Dependent Pathways

Radio-	Water		Fish		Radon		Plant		Meat		Milk		All pathways	
Nuclide	risk	fract.	risk	fract.	risk	fract.	risk	fract.	risk	fract.	risk	fract.	risk	fract.
Cs-137	0.000E+00	0.0000	0.000E+00	0.0000	0.000E+00	0.0000	0.000E+00	0.0000	0.000E+00	0.0000	0.000E+00	0.0000	1.308E-06	0.0974
Pb-210	0.000E+00	0.0000	0.000E+00	0.0000	0.000E+00	0.0000	0.000E+00	0.0000	0.000E+00	0.0000	0.000E+00	0.0000	9.535E-07	0.0710
Ra-226	0.000E+00	0.0000	0.000E+00	0.0000	0.000E+00	0.0000	0.000E+00	0.0000	0.000E+00	0.0000	0.000E+00	0.0000	7.746E-06	0.5768
Sr-90	0.000E+00	0.0000	0.000E+00	0.0000	0.000E+00	0.0000	0.000E+00	0.0000	0.000E+00	0.0000	0.000E+00	0.0000	3.421E-06	0.2547
Total	0.000E+00	0.0000	0.000E+00	0.0000	0.000E+00	0.0000	0.000E+00	0.0000	0.000E+00	0.0000	0.000E+00	0.0000	1.343E-05	1.0000

***CNRSI(i,p,t) includes contribution from decay daughter radionuclides

Amount of Intake Quantities QINT(i,p,t) for Individual Radionuclides (i) and Pathways (p)
As pCi/yr at t= 1.000E+00 years

Radio-	Water Independent Pathways (Inhalation w/o radon)					Water Dependent Pathways					Total
Nuclide	Inhalation	Plant	Meat	Milk	Soil	Water	Fish	Plant	Meat	Milk	Ingestion*
Cs-137	1.962E-03	4.805E+01	4.202E+00	1.372E+00	3.780E-01	0.000E+00	0.000E+00	0.000E+00	0.000E+00	0.000E+00	5.400E+01
Pb-210	2.271E-03	1.396E+01	4.807E-02	2.333E-02	4.376E-01	0.000E+00	0.000E+00	0.000E+00	0.000E+00	0.000E+00	1.447E+01
Ra-226	2.269E-03	5.558E+01	1.620E-01	1.984E-01	4.372E-01	0.000E+00	0.000E+00	0.000E+00	0.000E+00	0.000E+00	5.638E+01
Sr-90	9.141E-03	1.680E+03	3.392E+01	1.007E+01	1.761E+00	0.000E+00	0.000E+00	0.000E+00	0.000E+00	0.000E+00	1.725E+03

* Sum of all ingestion pathways, i.e. water independent plant, meat, milk, soil
and water-dependent water, fish, plant, meat, milk pathways

Amount of Intake Quantities QINT9(irn,i,t) and QINT9W(irn,i,t) for Inhalation of
Radon and its Decay Products as pCi/yr at t= 1.000E+00 years

Radon	Radionuclides							
Pathway	Rn-222	Po-218	Pb-214	Bi-214	Rn-220	Po-216	Pb-212	Bi-212
Water-ind.	0.000E+00	0.000E+00	0.000E+00	0.000E+00	0.000E+00	0.000E+00	0.000E+00	0.000E+00
Water-dep.	0.000E+00	0.000E+00	0.000E+00	0.000E+00	0.000E+00	0.000E+00	0.000E+00	0.000E+00
Total	0.000E+00	0.000E+00	0.000E+00	0.000E+00	0.000E+00	0.000E+00	0.000E+00	0.000E+00

Water-ind. == Water-independent Water-dep. == Water-dependent

Excess Cancer Risks CNRS(i,p,t) for Individual Radionuclides (i) and Pathways (p)
and Fraction of Total Risk at t= 1.000E+00 years

Water Independent Pathways (Inhalation excludes radon)

Radio-	Ground		Inhalation		Plant		Meat		Milk		Soil	
Nuclide	risk	fract.	risk	fract.	risk	fract.	risk	fract.	risk	fract.	risk	fract.
Cs-137	1.235E-06	0.0930	4.752E-12	0.0000	3.887E-08	0.0029	3.399E-09	0.0003	1.110E-09	0.0001	3.058E-10	0.0000
Pb-210	3.280E-09	0.0002	2.035E-09	0.0002	1.400E-06	0.1054	4.820E-09	0.0004	2.339E-09	0.0002	4.389E-08	0.0033
Ra-226	6.384E-06	0.4808	1.845E-09	0.0001	8.231E-07	0.0620	2.400E-09	0.0002	2.938E-09	0.0002	6.474E-09	0.0005
Sr-90	4.101E-08	0.0031	7.905E-11	0.0000	3.194E-06	0.2406	6.450E-08	0.0049	1.915E-08	0.0014	3.349E-09	0.0003
Total	7.663E-06	0.5772	3.964E-09	0.0003	5.456E-06	0.4109	7.512E-08	0.0057	2.554E-08	0.0019	5.402E-08	0.0041

Excess Cancer Risks CNRS(i,p,t) for Individual Radionuclides (i) and Pathways (p)
and Fraction of Total Risk at t= 1.000E+00 years

Water Dependent Pathways

Radio-	Water		Fish		Plant		Meat		Milk		All Pathways**	
Nuclide	risk	fract.	risk	fract.	risk	fract.	risk	fract.	risk	fract.	risk	fract.
Cs-137	0.000E+00	0.0000	0.000E+00	0.0000	0.000E+00	0.0000	0.000E+00	0.0000	0.000E+00	0.0000	1.278E-06	0.0963
Pb-210	0.000E+00	0.0000	0.000E+00	0.0000	0.000E+00	0.0000	0.000E+00	0.0000	0.000E+00	0.0000	1.456E-06	0.1097
Ra-226	0.000E+00	0.0000	0.000E+00	0.0000	0.000E+00	0.0000	0.000E+00	0.0000	0.000E+00	0.0000	7.221E-06	0.5438
Sr-90	0.000E+00	0.0000	0.000E+00	0.0000	0.000E+00	0.0000	0.000E+00	0.0000	0.000E+00	0.0000	3.322E-06	0.2502
Total	0.000E+00	0.0000	0.000E+00	0.0000	0.000E+00	0.0000	0.000E+00	0.0000	0.000E+00	0.0000	1.328E-05	1.0000

** Sum of water independent ground, inhalation, plant, meat, milk, soil
and water dependent water, fish, plant, meat, milk pathways

Excess Cancer Risks CNRS9(irn,i,t) and CNRS9W(irn,i,t) for Inhalation of
Radon and its Decay Products at t= 1.000E+00 years

Radon	Radionuclides							
Pathway	Rn-222	Po-218	Pb-214	Bi-214	Rn-220	Po-216	Pb-212	Bi-212
Water-ind.	0.000E+00	0.000E+00	0.000E+00	0.000E+00	0.000E+00	0.000E+00	0.000E+00	0.000E+00
Water-dep.	0.000E+00	0.000E+00	0.000E+00	0.000E+00	0.000E+00	0.000E+00	0.000E+00	0.000E+00
Total	0.000E+00	0.000E+00	0.000E+00	0.000E+00	0.000E+00	0.000E+00	0.000E+00	0.000E+00

Water-ind. == Water-independent Water-dep. == Water-dependent

Total Excess Cancer Risk CNRS(i,p,t)*** for Initially Existent Radionuclides (i) and Pathways (p)
and Fraction of Total Risk at t= 1.000E+00 years

Water Independent Pathways (Inhalation excludes radon)

Radio-	Ground		Inhalation		Radon		Plant		Meat		Milk		Soil	
Nuclide	risk	fract.	risk	fract.	risk	fract.	risk	fract.	risk	fract.	risk	fract.	risk	fract.
Cs-137	1.235E-06	0.0930	4.752E-12	0.0000	0.000E+00	0.0000	3.887E-08	0.0029	3.399E-09	0.0003	1.110E-09	0.0001	3.058E-10	0.0000
Pb-210	2.085E-09	0.0002	1.294E-09	0.0001	0.000E+00	0.0000	8.870E-07	0.0668	3.033E-09	0.0002	1.478E-09	0.0001	2.791E-08	0.0021
Ra-226	6.385E-06	0.4809	2.586E-09	0.0002	0.000E+00	0.0000	1.336E-06	0.1006	4.188E-09	0.0003	3.800E-09	0.0003	2.246E-08	0.0017
Sr-90	4.101E-08	0.0031	7.905E-11	0.0000	0.000E+00	0.0000	3.194E-06	0.2406	6.450E-08	0.0049	1.915E-08	0.0014	3.349E-09	0.0003
Total	7.663E-06	0.5772	3.964E-09	0.0003	0.000E+00	0.0000	5.456E-06	0.4109	7.512E-08	0.0057	2.554E-08	0.0019	5.402E-08	0.0041

Total Excess Cancer Risk CNRS(i,p,t)*** for Initially Existent Radionuclides (i) and Pathways (p)
and Fraction of Total Risk at t= 1.000E+00 years

Water Dependent Pathways

Radio-	Water		Fish		Radon		Plant		Meat		Milk		All pathways	
Nuclide	risk	fract.	risk	fract.	risk	fract.	risk	fract.	risk	fract.	risk	fract.	risk	fract.
Cs-137	0.000E+00	0.0000	0.000E+00	0.0000	0.000E+00	0.0000	0.000E+00	0.0000	0.000E+00	0.0000	0.000E+00	0.0000	1.278E-06	0.0963
Pb-210	0.000E+00	0.0000	0.000E+00	0.0000	0.000E+00	0.0000	0.000E+00	0.0000	0.000E+00	0.0000	0.000E+00	0.0000	9.228E-07	0.0695
Ra-226	0.000E+00	0.0000	0.000E+00	0.0000	0.000E+00	0.0000	0.000E+00	0.0000	0.000E+00	0.0000	0.000E+00	0.0000	7.754E-06	0.5840
Sr-90	0.000E+00	0.0000	0.000E+00	0.0000	0.000E+00	0.0000	0.000E+00	0.0000	0.000E+00	0.0000	0.000E+00	0.0000	3.322E-06	0.2502
Total	0.000E+00	0.0000	0.000E+00	0.0000	0.000E+00	0.0000	0.000E+00	0.0000	0.000E+00	0.0000	0.000E+00	0.0000	1.328E-05	1.0000

***CNRSI(i,p,t) includes contribution from decay daughter radionuclides

Amount of Intake Quantities QINT(i,p,t) for Individual Radionuclides (i) and Pathways (p)
As pCi/yr at t= 3.000E+00 years

Radio-	Water Independent Pathways (Inhalation w/o radon)					Water Dependent Pathways					Total
Nuclide	Inhalation	Plant	Meat	Milk	Soil	Water	Fish	Plant	Meat	Milk	Ingestion*
Cs-137	1.873E-03	4.588E+01	4.012E+00	1.310E+00	3.609E-01	0.000E+00	0.000E+00	0.000E+00	0.000E+00	0.000E+00	5.156E+01
Pb-210	2.263E-03	1.391E+01	4.790E-02	2.324E-02	4.361E-01	0.000E+00	0.000E+00	0.000E+00	0.000E+00	0.000E+00	1.442E+01
Ra-226	2.256E-03	5.527E+01	1.611E-01	1.973E-01	4.347E-01	0.000E+00	0.000E+00	0.000E+00	0.000E+00	0.000E+00	5.606E+01
Sr-90	8.620E-03	1.584E+03	3.199E+01	9.496E+00	1.661E+00	0.000E+00	0.000E+00	0.000E+00	0.000E+00	0.000E+00	1.627E+03

* Sum of all ingestion pathways, i.e. water independent plant, meat, milk, soil
and water-dependent water, fish, plant, meat, milk pathways

Amount of Intake Quantities QINT9(irn,i,t) and QINT9W(irn,i,t) for Inhalation of
Radon and its Decay Products as pCi/yr at t= 3.000E+00 years

Radon	Radionuclides							
Pathway	Rn-222	Po-218	Pb-214	Bi-214	Rn-220	Po-216	Pb-212	Bi-212
Water-ind.	0.000E+00	0.000E+00	0.000E+00	0.000E+00	0.000E+00	0.000E+00	0.000E+00	0.000E+00
Water-dep.	0.000E+00	0.000E+00	0.000E+00	0.000E+00	0.000E+00	0.000E+00	0.000E+00	0.000E+00
Total	0.000E+00	0.000E+00	0.000E+00	0.000E+00	0.000E+00	0.000E+00	0.000E+00	0.000E+00

Water-ind. == Water-independent Water-dep. == Water-dependent

Excess Cancer Risks CNRS(i,p,t) for Individual Radionuclides (i) and Pathways (p)
and Fraction of Total Risk at t= 3.000E+00 years

Water Independent Pathways (Inhalation excludes radon)

Radio-	Ground		Inhalation		Plant		Meat		Milk		Soil	
Nuclide	risk	fract.	risk	fract.	risk	fract.	risk	fract.	risk	fract.	risk	fract.
Cs-137	1.179E-06	0.0908	4.537E-12	0.0000	3.711E-08	0.0029	3.245E-09	0.0002	1.060E-09	0.0001	2.919E-10	0.0000
Pb-210	3.266E-09	0.0003	2.026E-09	0.0002	1.394E-06	0.1073	4.800E-09	0.0004	2.329E-09	0.0002	4.371E-08	0.0034
Ra-226	6.349E-06	0.4889	1.835E-09	0.0001	8.185E-07	0.0630	2.387E-09	0.0002	2.922E-09	0.0002	6.438E-09	0.0005
Sr-90	3.868E-08	0.0030	7.455E-11	0.0000	3.012E-06	0.2320	6.083E-08	0.0047	1.806E-08	0.0014	3.159E-09	0.0002
Total	7.569E-06	0.5830	3.940E-09	0.0003	5.262E-06	0.4052	7.126E-08	0.0055	2.437E-08	0.0019	5.360E-08	0.0041

Excess Cancer Risks CNRS(i,p,t) for Individual Radionuclides (i) and Pathways (p)
and Fraction of Total Risk at t= 3.000E+00 years

Water Dependent Pathways

Radio-	Water		Fish		Plant		Meat		Milk		All Pathways**	
Nuclide	risk	fract.	risk	fract.	risk	fract.	risk	fract.	risk	fract.	risk	fract.
Cs-137	0.000E+00	0.0000	0.000E+00	0.0000	0.000E+00	0.0000	0.000E+00	0.0000	0.000E+00	0.0000	1.221E-06	0.0940
Pb-210	0.000E+00	0.0000	0.000E+00	0.0000	0.000E+00	0.0000	0.000E+00	0.0000	0.000E+00	0.0000	1.450E-06	0.1117
Ra-226	0.000E+00	0.0000	0.000E+00	0.0000	0.000E+00	0.0000	0.000E+00	0.0000	0.000E+00	0.0000	7.181E-06	0.5530
Sr-90	0.000E+00	0.0000	0.000E+00	0.0000	0.000E+00	0.0000	0.000E+00	0.0000	0.000E+00	0.0000	3.133E-06	0.2413
Total	0.000E+00	0.0000	0.000E+00	0.0000	0.000E+00	0.0000	0.000E+00	0.0000	0.000E+00	0.0000	1.298E-05	1.0000

** Sum of water independent ground, inhalation, plant, meat, milk, soil
and water dependent water, fish, plant, meat, milk pathways

Excess Cancer Risks CNRS9(irn,i,t) and CNRS9W(irn,i,t) for Inhalation of
Radon and its Decay Products at t= 3.000E+00 years

Radon	Radionuclides							
Pathway	Rn-222	Po-218	Pb-214	Bi-214	Rn-220	Po-216	Pb-212	Bi-212
Water-ind.	0.000E+00	0.000E+00	0.000E+00	0.000E+00	0.000E+00	0.000E+00	0.000E+00	0.000E+00
Water-dep.	0.000E+00	0.000E+00	0.000E+00	0.000E+00	0.000E+00	0.000E+00	0.000E+00	0.000E+00
Total	0.000E+00	0.000E+00	0.000E+00	0.000E+00	0.000E+00	0.000E+00	0.000E+00	0.000E+00

Water-ind. == Water-independent Water-dep. == Water-dependent

Total Excess Cancer Risk CNRS(i,p,t)*** for Initially Existent Radionuclides (i) and Pathways (p)
and Fraction of Total Risk at t= 3.000E+00 years

Water Independent Pathways (Inhalation excludes radon)

Radio-	Ground		Inhalation		Radon		Plant		Meat		Milk		Soil	
Nuclide	risk	fract.	risk	fract.	risk	fract.	risk	fract.	risk	fract.	risk	fract.	risk	fract.
Cs-137	1.179E-06	0.0908	4.537E-12	0.0000	0.000E+00	0.0000	3.711E-08	0.0029	3.245E-09	0.0002	1.060E-09	0.0001	2.919E-10	0.0000
Pb-210	1.953E-09	0.0002	1.212E-09	0.0001	0.000E+00	0.0000	8.308E-07	0.0640	2.840E-09	0.0002	1.384E-09	0.0001	2.614E-08	0.0020
Ra-226	6.350E-06	0.4890	2.650E-09	0.0002	0.000E+00	0.0000	1.382E-06	0.1064	4.346E-09	0.0003	3.867E-09	0.0003	2.401E-08	0.0018
Sr-90	3.868E-08	0.0030	7.455E-11	0.0000	0.000E+00	0.0000	3.012E-06	0.2320	6.083E-08	0.0047	1.806E-08	0.0014	3.159E-09	0.0002
Total	7.569E-06	0.5830	3.940E-09	0.0003	0.000E+00	0.0000	5.262E-06	0.4052	7.126E-08	0.0055	2.437E-08	0.0019	5.360E-08	0.0041

Total Excess Cancer Risk CNRS(i,p,t)*** for Initially Existent Radionuclides (i) and Pathways (p)
and Fraction of Total Risk at t= 3.000E+00 years

Water Dependent Pathways

Radio-	Water		Fish		Radon		Plant		Meat		Milk		All pathways	
Nuclide	risk	fract.	risk	fract.	risk	fract.	risk	fract.	risk	fract.	risk	fract.	risk	fract.
Cs-137	0.000E+00	0.0000	0.000E+00	0.0000	0.000E+00	0.0000	0.000E+00	0.0000	0.000E+00	0.0000	0.000E+00	0.0000	1.221E-06	0.0940
Pb-210	0.000E+00	0.0000	0.000E+00	0.0000	0.000E+00	0.0000	0.000E+00	0.0000	0.000E+00	0.0000	0.000E+00	0.0000	8.643E-07	0.0666
Ra-226	0.000E+00	0.0000	0.000E+00	0.0000	0.000E+00	0.0000	0.000E+00	0.0000	0.000E+00	0.0000	0.000E+00	0.0000	7.766E-06	0.5981
Sr-90	0.000E+00	0.0000	0.000E+00	0.0000	0.000E+00	0.0000	0.000E+00	0.0000	0.000E+00	0.0000	0.000E+00	0.0000	3.133E-06	0.2413
Total	0.000E+00	0.0000	0.000E+00	0.0000	0.000E+00	0.0000	0.000E+00	0.0000	0.000E+00	0.0000	0.000E+00	0.0000	1.298E-05	1.0000

***CNRSI(i,p,t) includes contribution from decay daughter radionuclides

Amount of Intake Quantities QINT(i,p,t) for Individual Radionuclides (i) and Pathways (p)
As pCi/yr at t= 1.000E+01 years

Radio-	Water Independent Pathways (Inhalation w/o radon)					Water Dependent Pathways					Total
Nuclide	Inhalation	Plant	Meat	Milk	Soil	Water	Fish	Plant	Meat	Milk	Ingestion*
Cs-137	1.593E-03	3.901E+01	3.412E+00	1.114E+00	3.069E-01	0.000E+00	0.000E+00	0.000E+00	0.000E+00	0.000E+00	4.385E+01
Pb-210	2.234E-03	1.373E+01	4.727E-02	2.294E-02	4.305E-01	0.000E+00	0.000E+00	0.000E+00	0.000E+00	0.000E+00	1.423E+01
Ra-226	2.212E-03	5.419E+01	1.580E-01	1.934E-01	4.262E-01	0.000E+00	0.000E+00	0.000E+00	0.000E+00	0.000E+00	5.497E+01
Sr-90	7.021E-03	1.290E+03	2.605E+01	7.734E+00	1.353E+00	0.000E+00	0.000E+00	0.000E+00	0.000E+00	0.000E+00	1.325E+03

* Sum of all ingestion pathways, i.e. water independent plant, meat, milk, soil
and water-dependent water, fish, plant, meat, milk pathways

Amount of Intake Quantities QINT9(irn,i,t) and QINT9W(irn,i,t) for Inhalation of
Radon and its Decay Products as pCi/yr at t= 1.000E+01 years

Radon	Radionuclides							
Pathway	Rn-222	Po-218	Pb-214	Bi-214	Rn-220	Po-216	Pb-212	Bi-212
Water-ind.	0.000E+00	0.000E+00	0.000E+00	0.000E+00	0.000E+00	0.000E+00	0.000E+00	0.000E+00
Water-dep.	0.000E+00	0.000E+00	0.000E+00	0.000E+00	0.000E+00	0.000E+00	0.000E+00	0.000E+00
Total	0.000E+00	0.000E+00	0.000E+00	0.000E+00	0.000E+00	0.000E+00	0.000E+00	0.000E+00

Water-ind. == Water-independent Water-dep. == Water-dependent

Excess Cancer Risks CNRS(i,p,t) for Individual Radionuclides (i) and Pathways (p)
and Fraction of Total Risk at t= 1.000E+01 years

Water Independent Pathways (Inhalation excludes radon)

Radio-	Ground		Inhalation		Plant		Meat		Milk		Soil	
Nuclide	risk	fract.	risk	fract.	risk	fract.	risk	fract.	risk	fract.	risk	fract.
Cs-137	1.003E-06	0.0831	3.858E-12	0.0000	3.156E-08	0.0026	2.760E-09	0.0002	9.012E-10	0.0001	2.483E-10	0.0000
Pb-210	3.216E-09	0.0003	1.995E-09	0.0002	1.373E-06	0.1138	4.727E-09	0.0004	2.294E-09	0.0002	4.304E-08	0.0036
Ra-226	6.225E-06	0.5162	1.799E-09	0.0001	8.026E-07	0.0666	2.340E-09	0.0002	2.865E-09	0.0002	6.313E-09	0.0005
Sr-90	3.150E-08	0.0026	6.072E-11	0.0000	2.453E-06	0.2034	4.954E-08	0.0041	1.471E-08	0.0012	2.573E-09	0.0002
Total	7.262E-06	0.6023	3.859E-09	0.0003	4.660E-06	0.3864	5.937E-08	0.0049	2.077E-08	0.0017	5.218E-08	0.0043

Excess Cancer Risks CNRS(i,p,t) for Individual Radionuclides (i) and Pathways (p)
and Fraction of Total Risk at t= 1.000E+01 years

Water Dependent Pathways

Radio-	Water		Fish		Plant		Meat		Milk		All Pathways**	
Nuclide	risk	fract.	risk	fract.	risk	fract.	risk	fract.	risk	fract.	risk	fract.
Cs-137	0.000E+00	0.0000	0.000E+00	0.0000	0.000E+00	0.0000	0.000E+00	0.0000	0.000E+00	0.0000	1.038E-06	0.0861
Pb-210	0.000E+00	0.0000	0.000E+00	0.0000	0.000E+00	0.0000	0.000E+00	0.0000	0.000E+00	0.0000	1.428E-06	0.1184
Ra-226	0.000E+00	0.0000	0.000E+00	0.0000	0.000E+00	0.0000	0.000E+00	0.0000	0.000E+00	0.0000	7.041E-06	0.5839
Sr-90	0.000E+00	0.0000	0.000E+00	0.0000	0.000E+00	0.0000	0.000E+00	0.0000	0.000E+00	0.0000	2.552E-06	0.2116
Total	0.000E+00	0.0000	0.000E+00	0.0000	0.000E+00	0.0000	0.000E+00	0.0000	0.000E+00	0.0000	1.206E-05	1.0000

** Sum of water independent ground, inhalation, plant, meat, milk, soil
and water dependent water, fish, plant, meat, milk pathways

Excess Cancer Risks CNRS9(irn,i,t) and CNRS9W(irn,i,t) for Inhalation of
Radon and its Decay Products at t= 1.000E+01 years

Radon	Radionuclides							
Pathway	Rn-222	Po-218	Pb-214	Bi-214	Rn-220	Po-216	Pb-212	Bi-212
Water-ind.	0.000E+00	0.000E+00	0.000E+00	0.000E+00	0.000E+00	0.000E+00	0.000E+00	0.000E+00
Water-dep.	0.000E+00	0.000E+00	0.000E+00	0.000E+00	0.000E+00	0.000E+00	0.000E+00	0.000E+00
Total	0.000E+00	0.000E+00	0.000E+00	0.000E+00	0.000E+00	0.000E+00	0.000E+00	0.000E+00

Water-ind. == Water-independent Water-dep. == Water-dependent

Total Excess Cancer Risk CNRS(i,p,t)*** for Initially Existent Radionuclides (i) and Pathways (p)
and Fraction of Total Risk at t= 1.000E+01 years

Water Independent Pathways (Inhalation excludes radon)

Radio-	Ground		Inhalation		Radon		Plant		Meat		Milk		Soil	
Nuclide	risk	fract.	risk	fract.	risk	fract.	risk	fract.	risk	fract.	risk	fract.	risk	fract.
Cs-137	1.003E-06	0.0831	3.858E-12	0.0000	0.000E+00	0.0000	3.156E-08	0.0026	2.760E-09	0.0002	9.012E-10	0.0001	2.483E-10	0.0000
Pb-210	1.553E-09	0.0001	9.635E-10	0.0001	0.000E+00	0.0000	6.606E-07	0.0548	2.258E-09	0.0002	1.100E-09	0.0001	2.078E-08	0.0017
Ra-226	6.227E-06	0.5164	2.831E-09	0.0002	0.000E+00	0.0000	1.515E-06	0.1256	4.808E-09	0.0004	4.059E-09	0.0003	2.857E-08	0.0024
Sr-90	3.150E-08	0.0026	6.072E-11	0.0000	0.000E+00	0.0000	2.453E-06	0.2034	4.954E-08	0.0041	1.471E-08	0.0012	2.573E-09	0.0002
Total	7.262E-06	0.6023	3.859E-09	0.0003	0.000E+00	0.0000	4.660E-06	0.3864	5.937E-08	0.0049	2.077E-08	0.0017	5.218E-08	0.0043

Total Excess Cancer Risk CNRS(i,p,t)*** for Initially Existent Radionuclides (i) and Pathways (p)
and Fraction of Total Risk at t= 1.000E+01 years

Water Dependent Pathways

Radio-	Water		Fish		Radon		Plant		Meat		Milk		All pathways	
Nuclide	risk	fract.	risk	fract.	risk	fract.	risk	fract.	risk	fract.	risk	fract.	risk	fract.
Cs-137	0.000E+00	0.0000	0.000E+00	0.0000	0.000E+00	0.0000	0.000E+00	0.0000	0.000E+00	0.0000	0.000E+00	0.0000	1.038E-06	0.0861
Pb-210	0.000E+00	0.0000	0.000E+00	0.0000	0.000E+00	0.0000	0.000E+00	0.0000	0.000E+00	0.0000	0.000E+00	0.0000	6.873E-07	0.0570
Ra-226	0.000E+00	0.0000	0.000E+00	0.0000	0.000E+00	0.0000	0.000E+00	0.0000	0.000E+00	0.0000	0.000E+00	0.0000	7.782E-06	0.6453
Sr-90	0.000E+00	0.0000	0.000E+00	0.0000	0.000E+00	0.0000	0.000E+00	0.0000	0.000E+00	0.0000	0.000E+00	0.0000	2.552E-06	0.2116
Total	0.000E+00	0.0000	0.000E+00	0.0000	0.000E+00	0.0000	0.000E+00	0.0000	0.000E+00	0.0000	0.000E+00	0.0000	1.206E-05	1.0000

***CNRSI(i,p,t) includes contribution from decay daughter radionuclides

Amount of Intake Quantities QINT(i,p,t) for Individual Radionuclides (i) and Pathways (p)
As pCi/yr at t= 3.000E+01 years

Radio-	Water Independent Pathways (Inhalation w/o radon)					Water Dependent Pathways					Total
Nuclide	Inhalation	Plant	Meat	Milk	Soil	Water	Fish	Plant	Meat	Milk	Ingestion*
Cs-137	1.003E-03	2.456E+01	2.148E+00	7.013E-01	1.932E-01	0.000E+00	0.000E+00	0.000E+00	0.000E+00	0.000E+00	2.760E+01
Pb-210	2.139E-03	1.314E+01	4.525E-02	2.196E-02	4.121E-01	0.000E+00	0.000E+00	0.000E+00	0.000E+00	0.000E+00	1.362E+01
Ra-226	2.091E-03	5.123E+01	1.494E-01	1.829E-01	4.030E-01	0.000E+00	0.000E+00	0.000E+00	0.000E+00	0.000E+00	5.197E+01
Sr-90	3.906E-03	7.177E+02	1.449E+01	4.303E+00	7.526E-01	0.000E+00	0.000E+00	0.000E+00	0.000E+00	0.000E+00	7.372E+02

* Sum of all ingestion pathways, i.e. water independent plant, meat, milk, soil
and water-dependent water, fish, plant, meat, milk pathways

Amount of Intake Quantities QINT9(irn,i,t) and QINT9W(irn,i,t) for Inhalation of
Radon and its Decay Products as pCi/yr at t= 3.000E+01 years

Radon	Radionuclides							
Pathway	Rn-222	Po-218	Pb-214	Bi-214	Rn-220	Po-216	Pb-212	Bi-212
Water-ind.	0.000E+00	0.000E+00	0.000E+00	0.000E+00	0.000E+00	0.000E+00	0.000E+00	0.000E+00
Water-dep.	0.000E+00	0.000E+00	0.000E+00	0.000E+00	0.000E+00	0.000E+00	0.000E+00	0.000E+00
Total	0.000E+00	0.000E+00	0.000E+00	0.000E+00	0.000E+00	0.000E+00	0.000E+00	0.000E+00

Water-ind. == Water-independent Water-dep. == Water-dependent

Excess Cancer Risks CNRS(i,p,t) for Individual Radionuclides (i) and Pathways (p)
and Fraction of Total Risk at t= 3.000E+01 years

Water Independent Pathways (Inhalation excludes radon)

Radio-	Ground		Inhalation		Plant		Meat		Milk		Soil	
Nuclide	risk	fract.	risk	fract.	risk	fract.	risk	fract.	risk	fract.	risk	fract.
Cs-137	6.311E-07	0.0625	2.429E-12	0.0000	1.987E-08	0.0020	1.737E-09	0.0002	5.673E-10	0.0001	1.563E-10	0.0000
Pb-210	3.066E-09	0.0003	1.902E-09	0.0002	1.308E-06	0.1297	4.505E-09	0.0004	2.187E-09	0.0002	4.103E-08	0.0041
Ra-226	5.885E-06	0.5832	1.701E-09	0.0002	7.588E-07	0.0752	2.212E-09	0.0002	2.709E-09	0.0003	5.968E-09	0.0006
Sr-90	1.753E-08	0.0017	3.378E-11	0.0000	1.365E-06	0.1353	2.756E-08	0.0027	8.182E-09	0.0008	1.431E-09	0.0001
Total	6.537E-06	0.6478	3.639E-09	0.0004	3.452E-06	0.3421	3.602E-08	0.0036	1.364E-08	0.0014	4.859E-08	0.0048

Excess Cancer Risks CNRS(i,p,t) for Individual Radionuclides (i) and Pathways (p)
and Fraction of Total Risk at t= 3.000E+01 years

Water Dependent Pathways

Radio-	Water		Fish		Plant		Meat		Milk		All Pathways**	
Nuclide	risk	fract.	risk	fract.	risk	fract.	risk	fract.	risk	fract.	risk	fract.
Cs-137	0.000E+00	0.0000	0.000E+00	0.0000	0.000E+00	0.0000	0.000E+00	0.0000	0.000E+00	0.0000	6.535E-07	0.0648
Pb-210	0.000E+00	0.0000	0.000E+00	0.0000	0.000E+00	0.0000	0.000E+00	0.0000	0.000E+00	0.0000	1.361E-06	0.1349
Ra-226	0.000E+00	0.0000	0.000E+00	0.0000	0.000E+00	0.0000	0.000E+00	0.0000	0.000E+00	0.0000	6.657E-06	0.6597
Sr-90	0.000E+00	0.0000	0.000E+00	0.0000	0.000E+00	0.0000	0.000E+00	0.0000	0.000E+00	0.0000	1.420E-06	0.1407
Total	0.000E+00	0.0000	0.000E+00	0.0000	0.000E+00	0.0000	0.000E+00	0.0000	0.000E+00	0.0000	1.009E-05	1.0000

** Sum of water independent ground, inhalation, plant, meat, milk, soil
and water dependent water, fish, plant, meat, milk pathways

Excess Cancer Risks CNRS9(irn,i,t) and CNRS9W(irn,i,t) for Inhalation of
Radon and its Decay Products at t= 3.000E+01 years

Radon	Radionuclides							
Pathway	Rn-222	Po-218	Pb-214	Bi-214	Rn-220	Po-216	Pb-212	Bi-212
Water-ind.	0.000E+00	0.000E+00	0.000E+00	0.000E+00	0.000E+00	0.000E+00	0.000E+00	0.000E+00
Water-dep.	0.000E+00	0.000E+00	0.000E+00	0.000E+00	0.000E+00	0.000E+00	0.000E+00	0.000E+00
Total	0.000E+00	0.000E+00	0.000E+00	0.000E+00	0.000E+00	0.000E+00	0.000E+00	0.000E+00

Water-ind. == Water-independent Water-dep. == Water-dependent

Total Excess Cancer Risk CNRS(i,p,t)*** for Initially Existent Radionuclides (i) and Pathways (p)
and Fraction of Total Risk at t= 3.000E+01 years

Water Independent Pathways (Inhalation excludes radon)

Radio-	Ground		Inhalation		Radon		Plant		Meat		Milk		Soil	
Nuclide	risk	fract.	risk	fract.	risk	fract.	risk	fract.	risk	fract.	risk	fract.	risk	fract.
Cs-137	6.311E-07	0.0625	2.429E-12	0.0000	0.000E+00	0.0000	1.987E-08	0.0020	1.737E-09	0.0002	5.673E-10	0.0001	1.563E-10	0.0000
Pb-210	8.067E-10	0.0001	5.005E-10	0.0000	0.000E+00	0.0000	3.432E-07	0.0340	1.173E-09	0.0001	5.716E-10	0.0001	1.080E-08	0.0011
Ra-226	5.887E-06	0.5835	3.103E-09	0.0003	0.000E+00	0.0000	1.724E-06	0.1709	5.544E-09	0.0005	4.324E-09	0.0004	3.620E-08	0.0036
Sr-90	1.753E-08	0.0017	3.378E-11	0.0000	0.000E+00	0.0000	1.365E-06	0.1353	2.756E-08	0.0027	8.182E-09	0.0008	1.431E-09	0.0001
Total	6.537E-06	0.6478	3.639E-09	0.0004	0.000E+00	0.0000	3.452E-06	0.3421	3.602E-08	0.0036	1.364E-08	0.0014	4.859E-08	0.0048

Total Excess Cancer Risk CNRS(i,p,t)*** for Initially Existent Radionuclides (i) and Pathways (p)
and Fraction of Total Risk at t= 3.000E+01 years

Water Dependent Pathways

Radio-	Water		Fish		Radon		Plant		Meat		Milk		All pathways	
Nuclide	risk	fract.	risk	fract.	risk	fract.	risk	fract.	risk	fract.	risk	fract.	risk	fract.
Cs-137	0.000E+00	0.0000	0.000E+00	0.0000	0.000E+00	0.0000	0.000E+00	0.0000	0.000E+00	0.0000	0.000E+00	0.0000	6.535E-07	0.0648
Pb-210	0.000E+00	0.0000	0.000E+00	0.0000	0.000E+00	0.0000	0.000E+00	0.0000	0.000E+00	0.0000	0.000E+00	0.0000	3.570E-07	0.0354
Ra-226	0.000E+00	0.0000	0.000E+00	0.0000	0.000E+00	0.0000	0.000E+00	0.0000	0.000E+00	0.0000	0.000E+00	0.0000	7.661E-06	0.7592
Sr-90	0.000E+00	0.0000	0.000E+00	0.0000	0.000E+00	0.0000	0.000E+00	0.0000	0.000E+00	0.0000	0.000E+00	0.0000	1.420E-06	0.1407
Total	0.000E+00	0.0000	0.000E+00	0.0000	0.000E+00	0.0000	0.000E+00	0.0000	0.000E+00	0.0000	0.000E+00	0.0000	1.009E-05	1.0000

***CNRSI(i,p,t) includes contribution from decay daughter radionuclides

Amount of Intake Quantities QINT(i,p,t) for Individual Radionuclides (i) and Pathways (p)
As pCi/yr at t= 1.000E+02 years

Radio-	Water Independent Pathways (Inhalation w/o radon)					Water Dependent Pathways					Total
Nuclide	Inhalation	Plant	Meat	Milk	Soil	Water	Fish	Plant	Meat	Milk	Ingestion*
Cs-137	1.984E-04	4.861E+00	4.251E-01	1.388E-01	3.824E-02	0.000E+00	0.000E+00	0.000E+00	0.000E+00	0.000E+00	5.463E+00
Pb-210	1.781E-03	1.094E+01	3.767E-02	1.828E-02	3.431E-01	0.000E+00	0.000E+00	0.000E+00	0.000E+00	0.000E+00	1.134E+01
Ra-226	1.718E-03	4.209E+01	1.227E-01	1.503E-01	3.311E-01	0.000E+00	0.000E+00	0.000E+00	0.000E+00	0.000E+00	4.270E+01
Sr-90	5.016E-04	9.218E+01	1.861E+00	5.526E-01	9.666E-02	0.000E+00	0.000E+00	0.000E+00	0.000E+00	0.000E+00	9.469E+01

* Sum of all ingestion pathways, i.e. water independent plant, meat, milk, soil
and water-dependent water, fish, plant, meat, milk pathways

Amount of Intake Quantities QINT9(irn,i,t) and QINT9W(irn,i,t) for Inhalation of
Radon and its Decay Products as pCi/yr at t= 1.000E+02 years

Radon	Radionuclides							
Pathway	Rn-222	Po-218	Pb-214	Bi-214	Rn-220	Po-216	Pb-212	Bi-212
Water-ind.	0.000E+00	0.000E+00	0.000E+00	0.000E+00	0.000E+00	0.000E+00	0.000E+00	0.000E+00
Water-dep.	0.000E+00	0.000E+00	0.000E+00	0.000E+00	0.000E+00	0.000E+00	0.000E+00	0.000E+00
Total	0.000E+00	0.000E+00	0.000E+00	0.000E+00	0.000E+00	0.000E+00	0.000E+00	0.000E+00

Water-ind. == Water-independent Water-dep. == Water-dependent

Excess Cancer Risks CNRS(i,p,t) for Individual Radionuclides (i) and Pathways (p)
and Fraction of Total Risk at t= 1.000E+02 years

Water Independent Pathways (Inhalation excludes radon)

Radio-	Ground		Inhalation		Plant		Meat		Milk		Soil	
Nuclide	risk	fract.	risk	fract.	risk	fract.	risk	fract.	risk	fract.	risk	fract.
Cs-137	1.249E-07	0.0181	4.807E-13	0.0000	3.932E-09	0.0006	3.439E-10	0.0000	1.123E-10	0.0000	3.093E-11	0.0000
Pb-210	2.541E-09	0.0004	1.577E-09	0.0002	1.084E-06	0.1570	3.734E-09	0.0005	1.812E-09	0.0003	3.401E-08	0.0049
Ra-226	4.835E-06	0.6999	1.398E-09	0.0002	6.234E-07	0.0902	1.818E-09	0.0003	2.225E-09	0.0003	4.904E-09	0.0007
Sr-90	2.251E-09	0.0003	4.338E-12	0.0000	1.753E-07	0.0254	3.540E-09	0.0005	1.051E-09	0.0002	1.838E-10	0.0000
Total	4.965E-06	0.7186	2.979E-09	0.0004	1.887E-06	0.2731	9.435E-09	0.0014	5.201E-09	0.0008	3.913E-08	0.0057

Excess Cancer Risks CNRS(i,p,t) for Individual Radionuclides (i) and Pathways (p)
and Fraction of Total Risk at t= 1.000E+02 years

Water Dependent Pathways

Radio-	Water		Fish		Plant		Meat		Milk		All Pathways**	
Nuclide	risk	fract.	risk	fract.	risk	fract.	risk	fract.	risk	fract.	risk	fract.
Cs-137	0.000E+00	0.0000	0.000E+00	0.0000	0.000E+00	0.0000	0.000E+00	0.0000	0.000E+00	0.0000	1.293E-07	0.0187
Pb-210	0.000E+00	0.0000	0.000E+00	0.0000	0.000E+00	0.0000	0.000E+00	0.0000	0.000E+00	0.0000	1.128E-06	0.1633
Ra-226	0.000E+00	0.0000	0.000E+00	0.0000	0.000E+00	0.0000	0.000E+00	0.0000	0.000E+00	0.0000	5.469E-06	0.7916
Sr-90	0.000E+00	0.0000	0.000E+00	0.0000	0.000E+00	0.0000	0.000E+00	0.0000	0.000E+00	0.0000	1.823E-07	0.0264
Total	0.000E+00	0.0000	0.000E+00	0.0000	0.000E+00	0.0000	0.000E+00	0.0000	0.000E+00	0.0000	6.909E-06	1.0000

** Sum of water independent ground, inhalation, plant, meat, milk, soil
and water dependent water, fish, plant, meat, milk pathways

Excess Cancer Risks CNRS9(irn,i,t) and CNRS9W(irn,i,t) for Inhalation of
Radon and its Decay Products at t= 1.000E+02 years

Radon	Radionuclides							
Pathway	Rn-222	Po-218	Pb-214	Bi-214	Rn-220	Po-216	Pb-212	Bi-212
Water-ind.	0.000E+00	0.000E+00	0.000E+00	0.000E+00	0.000E+00	0.000E+00	0.000E+00	0.000E+00
Water-dep.	0.000E+00	0.000E+00	0.000E+00	0.000E+00	0.000E+00	0.000E+00	0.000E+00	0.000E+00
Total	0.000E+00	0.000E+00	0.000E+00	0.000E+00	0.000E+00	0.000E+00	0.000E+00	0.000E+00

Water-ind. == Water-independent Water-dep. == Water-dependent

Total Excess Cancer Risk CNRS(i,p,t)*** for Initially Existent Radionuclides (i) and Pathways (p)
and Fraction of Total Risk at t= 1.000E+02 years

Water Independent Pathways (Inhalation excludes radon)

Radio-	Ground		Inhalation		Radon		Plant		Meat		Milk		Soil	
Nuclide	risk	fract.	risk	fract.	risk	fract.	risk	fract.	risk	fract.	risk	fract.	risk	fract.
Cs-137	1.249E-07	0.0181	4.807E-13	0.0000	0.000E+00	0.0000	3.932E-09	0.0006	3.439E-10	0.0000	1.123E-10	0.0000	3.093E-11	0.0000
Pb-210	8.151E-11	0.0000	5.057E-11	0.0000	0.000E+00	0.0000	3.467E-08	0.0050	1.185E-10	0.0000	5.776E-11	0.0000	1.091E-09	0.0002
Ra-226	4.838E-06	0.7002	2.924E-09	0.0004	0.000E+00	0.0000	1.673E-06	0.2422	5.433E-09	0.0008	3.980E-09	0.0006	3.782E-08	0.0055
Sr-90	2.251E-09	0.0003	4.338E-12	0.0000	0.000E+00	0.0000	1.753E-07	0.0254	3.540E-09	0.0005	1.051E-09	0.0002	1.838E-10	0.0000
Total	4.965E-06	0.7186	2.979E-09	0.0004	0.000E+00	0.0000	1.887E-06	0.2731	9.435E-09	0.0014	5.201E-09	0.0008	3.913E-08	0.0057

Total Excess Cancer Risk CNRS(i,p,t)*** for Initially Existent Radionuclides (i) and Pathways (p)
and Fraction of Total Risk at t= 1.000E+02 years

Water Dependent Pathways

Radio-	Water		Fish		Radon		Plant		Meat		Milk		All pathways	
Nuclide	risk	fract.	risk	fract.	risk	fract.	risk	fract.	risk	fract.	risk	fract.	risk	fract.
Cs-137	0.000E+00	0.0000	0.000E+00	0.0000	0.000E+00	0.0000	0.000E+00	0.0000	0.000E+00	0.0000	0.000E+00	0.0000	1.293E-07	0.0187
Pb-210	0.000E+00	0.0000	0.000E+00	0.0000	0.000E+00	0.0000	0.000E+00	0.0000	0.000E+00	0.0000	0.000E+00	0.0000	3.607E-08	0.0052
Ra-226	0.000E+00	0.0000	0.000E+00	0.0000	0.000E+00	0.0000	0.000E+00	0.0000	0.000E+00	0.0000	0.000E+00	0.0000	6.561E-06	0.9497
Sr-90	0.000E+00	0.0000	0.000E+00	0.0000	0.000E+00	0.0000	0.000E+00	0.0000	0.000E+00	0.0000	0.000E+00	0.0000	1.823E-07	0.0264
Total	0.000E+00	0.0000	0.000E+00	0.0000	0.000E+00	0.0000	0.000E+00	0.0000	0.000E+00	0.0000	0.000E+00	0.0000	6.909E-06	1.0000

***CNRSI(i,p,t) includes contribution from decay daughter radionuclides

Amount of Intake Quantities QINT(i,p,t) for Individual Radionuclides (i) and Pathways (p)
As pCi/yr at t= 3.000E+02 years

Radio-	Water Independent Pathways (Inhalation w/o radon)					Water Dependent Pathways					Total
Nuclide	Inhalation	Plant	Meat	Milk	Soil	Water	Fish	Plant	Meat	Milk	Ingestion*
Cs-137	1.939E-06	4.750E-02	4.154E-03	1.356E-03	3.737E-04	0.000E+00	0.000E+00	0.000E+00	0.000E+00	0.000E+00	5.339E-02
Pb-210	1.018E-03	6.252E+00	2.153E-02	1.045E-02	1.961E-01	0.000E+00	0.000E+00	0.000E+00	0.000E+00	0.000E+00	6.480E+00
Ra-226	9.801E-04	2.401E+01	7.001E-02	8.571E-02	1.889E-01	0.000E+00	0.000E+00	0.000E+00	0.000E+00	0.000E+00	2.436E+01
Sr-90	1.425E-06	2.618E-01	5.287E-03	1.570E-03	2.745E-04	1.216E-01	6.166E-05	3.163E-03	3.287E-04	1.794E-04	3.942E-01

* Sum of all ingestion pathways, i.e. water independent plant, meat, milk, soil
and water-dependent water, fish, plant, meat, milk pathways

Amount of Intake Quantities QINT9(irn,i,t) and QINT9W(irn,i,t) for Inhalation of
Radon and its Decay Products as pCi/yr at t= 3.000E+02 years

Radon	Radionuclides							
Pathway	Rn-222	Po-218	Pb-214	Bi-214	Rn-220	Po-216	Pb-212	Bi-212
Water-ind.	0.000E+00	0.000E+00	0.000E+00	0.000E+00	0.000E+00	0.000E+00	0.000E+00	0.000E+00
Water-dep.	0.000E+00	0.000E+00	0.000E+00	0.000E+00	0.000E+00	0.000E+00	0.000E+00	0.000E+00
Total	0.000E+00	0.000E+00	0.000E+00	0.000E+00	0.000E+00	0.000E+00	0.000E+00	0.000E+00

Water-ind. == Water-independent Water-dep. == Water-dependent

Excess Cancer Risks CNRS(i,p,t) for Individual Radionuclides (i) and Pathways (p)
and Fraction of Total Risk at t= 3.000E+02 years

Water Independent Pathways (Inhalation excludes radon)

Radio-	Ground		Inhalation		Plant		Meat		Milk		Soil	
Nuclide	risk	fract.	risk	fract.	risk	fract.	risk	fract.	risk	fract.	risk	fract.
Cs-137	1.221E-09	0.0003	4.698E-15	0.0000	3.843E-11	0.0000	3.360E-12	0.0000	1.097E-12	0.0000	3.023E-13	0.0000
Pb-210	1.451E-09	0.0004	9.004E-10	0.0002	6.193E-07	0.1645	2.132E-09	0.0006	1.035E-09	0.0003	1.942E-08	0.0052
Ra-226	2.758E-06	0.7324	7.972E-10	0.0002	3.556E-07	0.0944	1.037E-09	0.0003	1.269E-09	0.0003	2.797E-09	0.0007
Sr-90	6.393E-12	0.0000	1.232E-14	0.0000	4.979E-10	0.0001	1.005E-11	0.0000	2.985E-12	0.0000	5.221E-13	0.0000
Total	2.761E-06	0.7331	1.698E-09	0.0005	9.755E-07	0.2590	3.183E-09	0.0008	2.309E-09	0.0006	2.222E-08	0.0059

Excess Cancer Risks CNRS(i,p,t) for Individual Radionuclides (i) and Pathways (p)
and Fraction of Total Risk at t= 3.000E+02 years

Water Dependent Pathways

Radio-	Water		Fish		Plant		Meat		Milk		All Pathways**	
Nuclide	risk	fract.	risk	fract.	risk	fract.	risk	fract.	risk	fract.	risk	fract.
Cs-137	0.000E+00	0.0000	0.000E+00	0.0000	0.000E+00	0.0000	0.000E+00	0.0000	0.000E+00	0.0000	1.264E-09	0.0003
Pb-210	0.000E+00	0.0000	0.000E+00	0.0000	0.000E+00	0.0000	0.000E+00	0.0000	0.000E+00	0.0000	6.443E-07	0.1711
Ra-226	0.000E+00	0.0000	0.000E+00	0.0000	0.000E+00	0.0000	0.000E+00	0.0000	0.000E+00	0.0000	3.120E-06	0.8284
Sr-90	2.086E-10	0.0001	1.363E-13	0.0000	6.991E-12	0.0000	7.264E-13	0.0000	3.965E-13	0.0000	7.347E-10	0.0002
Total	2.086E-10	0.0001	1.363E-13	0.0000	6.991E-12	0.0000	7.264E-13	0.0000	3.965E-13	0.0000	3.766E-06	1.0000

** Sum of water independent ground, inhalation, plant, meat, milk, soil
and water dependent water, fish, plant, meat, milk pathways

Excess Cancer Risks CNRS9(irn,i,t) and CNRS9W(irn,i,t) for Inhalation of
Radon and its Decay Products at t= 3.000E+02 years

Radon	Radionuclides							
Pathway	Rn-222	Po-218	Pb-214	Bi-214	Rn-220	Po-216	Pb-212	Bi-212
Water-ind.	0.000E+00	0.000E+00	0.000E+00	0.000E+00	0.000E+00	0.000E+00	0.000E+00	0.000E+00
Water-dep.	0.000E+00	0.000E+00	0.000E+00	0.000E+00	0.000E+00	0.000E+00	0.000E+00	0.000E+00
Total	0.000E+00	0.000E+00	0.000E+00	0.000E+00	0.000E+00	0.000E+00	0.000E+00	0.000E+00

Water-ind. == Water-independent Water-dep. == Water-dependent

Total Excess Cancer Risk CNRS(i,p,t)*** for Initially Existent Radionuclides (i) and Pathways (p)
and Fraction of Total Risk at t= 3.000E+02 years

Water Independent Pathways (Inhalation excludes radon)

Radio-	Ground		Inhalation		Radon		Plant		Meat		Milk		Soil	
Nuclide	risk	fract.	risk	fract.	risk	fract.	risk	fract.	risk	fract.	risk	fract.	risk	fract.
Cs-137	1.221E-09	0.0003	4.698E-15	0.0000	0.000E+00	0.0000	3.843E-11	0.0000	3.360E-12	0.0000	1.097E-12	0.0000	3.023E-13	0.0000
Pb-210	1.167E-13	0.0000	7.238E-14	0.0000	0.000E+00	0.0000	4.963E-11	0.0000	1.697E-13	0.0000	8.267E-14	0.0000	1.561E-12	0.0000
Ra-226	2.760E-06	0.7328	1.698E-09	0.0005	0.000E+00	0.0000	9.749E-07	0.2589	3.169E-09	0.0008	2.304E-09	0.0006	2.222E-08	0.0059
Sr-90	6.393E-12	0.0000	1.232E-14	0.0000	0.000E+00	0.0000	4.979E-10	0.0001	1.005E-11	0.0000	2.985E-12	0.0000	5.221E-13	0.0000
Total	2.761E-06	0.7331	1.698E-09	0.0005	0.000E+00	0.0000	9.755E-07	0.2590	3.183E-09	0.0008	2.309E-09	0.0006	2.222E-08	0.0059

Total Excess Cancer Risk CNRS(i,p,t)*** for Initially Existent Radionuclides (i) and Pathways (p)
and Fraction of Total Risk at t= 3.000E+02 years

Water Dependent Pathways

Radio-	Water		Fish		Radon		Plant		Meat		Milk		All pathways	
Nuclide	risk	fract.	risk	fract.	risk	fract.	risk	fract.	risk	fract.	risk	fract.	risk	fract.
Cs-137	0.000E+00	0.0000	0.000E+00	0.0000	0.000E+00	0.0000	0.000E+00	0.0000	0.000E+00	0.0000	0.000E+00	0.0000	1.264E-09	0.0003
Pb-210	0.000E+00	0.0000	0.000E+00	0.0000	0.000E+00	0.0000	0.000E+00	0.0000	0.000E+00	0.0000	0.000E+00	0.0000	5.163E-11	0.0000
Ra-226	0.000E+00	0.0000	0.000E+00	0.0000	0.000E+00	0.0000	0.000E+00	0.0000	0.000E+00	0.0000	0.000E+00	0.0000	3.764E-06	0.9995
Sr-90	2.086E-10	0.0001	1.363E-13	0.0000	0.000E+00	0.0000	6.991E-12	0.0000	7.264E-13	0.0000	3.965E-13	0.0000	7.347E-10	0.0002
Total	2.086E-10	0.0001	1.363E-13	0.0000	0.000E+00	0.0000	6.991E-12	0.0000	7.264E-13	0.0000	3.965E-13	0.0000	3.766E-06	1.0000

***CNRSI(i,p,t) includes contribution from decay daughter radionuclides

Amount of Intake Quantities QINT(i,p,t) for Individual Radionuclides (i) and Pathways (p)
As pCi/yr at t= 1.000E+03 years

Radio-	Water Independent Pathways (Inhalation w/o radon)					Water Dependent Pathways					Total
Nuclide	Inhalation	Plant	Meat	Milk	Soil	Water	Fish	Plant	Meat	Milk	Ingestion*
Cs-137	1.789E-13	4.382E-09	3.832E-10	1.251E-10	3.447E-11	0.000E+00	0.000E+00	0.000E+00	0.000E+00	0.000E+00	4.925E-09
Pb-210	1.426E-04	8.764E-01	3.018E-03	1.465E-03	2.749E-02	1.034E+01	2.165E-02	2.502E-01	2.787E-03	2.284E-03	1.152E+01
Ra-226	1.374E-04	3.366E+00	9.814E-03	1.202E-02	2.647E-02	1.471E+01	8.921E-03	3.587E-01	4.947E-03	1.082E-02	1.850E+01
Sr-90	1.740E-15	3.197E-10	6.456E-12	1.917E-12	3.352E-13	1.993E-09	1.011E-12	5.188E-11	5.398E-12	2.943E-12	2.383E-09

* Sum of all ingestion pathways, i.e. water independent plant, meat, milk, soil
and water-dependent water, fish, plant, meat, milk pathways

Amount of Intake Quantities QINT9(irn,i,t) and QINT9W(irn,i,t) for Inhalation of
Radon and its Decay Products as pCi/yr at t= 1.000E+03 years

Radon	Radionuclides							
Pathway	Rn-222	Po-218	Pb-214	Bi-214	Rn-220	Po-216	Pb-212	Bi-212
Water-ind.	0.000E+00	0.000E+00	0.000E+00	0.000E+00	0.000E+00	0.000E+00	0.000E+00	0.000E+00
Water-dep.	0.000E+00	0.000E+00	0.000E+00	0.000E+00	0.000E+00	0.000E+00	0.000E+00	0.000E+00
Total	0.000E+00	0.000E+00	0.000E+00	0.000E+00	0.000E+00	0.000E+00	0.000E+00	0.000E+00

Water-ind. == Water-independent Water-dep. == Water-dependent

Excess Cancer Risks CNRS(i,p,t) for Individual Radionuclides (i) and Pathways (p)
and Fraction of Total Risk at t= 1.000E+03 years

Water Independent Pathways (Inhalation excludes radon)

Radio-	Ground		Inhalation		Plant		Meat		Milk		Soil	
Nuclide	risk	fract.	risk	fract.	risk	fract.	risk	fract.	risk	fract.	risk	fract.
Cs-137	1.126E-16	0.0000	4.334E-22	0.0000	3.545E-18	0.0000	3.100E-19	0.0000	1.012E-19	0.0000	2.788E-20	0.0000
Pb-210	2.034E-10	0.0001	1.262E-10	0.0001	8.682E-08	0.0555	2.989E-10	0.0002	1.451E-10	0.0001	2.723E-09	0.0017
Ra-226	3.866E-07	0.2473	1.118E-10	0.0001	4.985E-08	0.0319	1.453E-10	0.0001	1.779E-10	0.0001	3.921E-10	0.0003
Sr-90	7.806E-21	0.0000	1.505E-23	0.0000	6.079E-19	0.0000	1.228E-20	0.0000	3.645E-21	0.0000	6.375E-22	0.0000
Total	3.868E-07	0.2474	2.380E-10	0.0002	1.367E-07	0.0874	4.443E-10	0.0003	3.230E-10	0.0002	3.115E-09	0.0020

Excess Cancer Risks CNRS(i,p,t) for Individual Radionuclides (i) and Pathways (p)
and Fraction of Total Risk at t= 1.000E+03 years

Water Dependent Pathways

Radio-	Water		Fish		Plant		Meat		Milk		All Pathways**	
Nuclide	risk	fract.	risk	fract.	risk	fract.	risk	fract.	risk	fract.	risk	fract.
Cs-137	0.000E+00	0.0000	0.000E+00	0.0000	0.000E+00	0.0000	0.000E+00	0.0000	0.000E+00	0.0000	1.166E-16	0.0000
Pb-210	8.301E-07	0.5309	2.251E-09	0.0014	2.601E-08	0.0166	2.897E-10	0.0002	2.374E-10	0.0002	9.492E-07	0.6071
Ra-226	1.711E-07	0.1094	1.386E-10	0.0001	5.572E-09	0.0036	7.686E-11	0.0000	1.681E-10	0.0001	6.144E-07	0.3929
Sr-90	2.929E-18	0.0000	1.914E-21	0.0000	9.819E-20	0.0000	1.022E-20	0.0000	5.570E-21	0.0000	3.677E-18	0.0000
Total	1.001E-06	0.6403	2.389E-09	0.0015	3.159E-08	0.0202	3.666E-10	0.0002	4.055E-10	0.0003	1.564E-06	1.0000

** Sum of water independent ground, inhalation, plant, meat, milk, soil
and water dependent water, fish, plant, meat, milk pathways

Excess Cancer Risks CNRS9(irn,i,t) and CNRS9W(irn,i,t) for Inhalation of
Radon and its Decay Products at t= 1.000E+03 years

Radon	Radionuclides							
Pathway	Rn-222	Po-218	Pb-214	Bi-214	Rn-220	Po-216	Pb-212	Bi-212
Water-ind.	0.000E+00	0.000E+00	0.000E+00	0.000E+00	0.000E+00	0.000E+00	0.000E+00	0.000E+00
Water-dep.	0.000E+00	0.000E+00	0.000E+00	0.000E+00	0.000E+00	0.000E+00	0.000E+00	0.000E+00
Total	0.000E+00	0.000E+00	0.000E+00	0.000E+00	0.000E+00	0.000E+00	0.000E+00	0.000E+00

Water-ind. == Water-independent Water-dep. == Water-dependent

Total Excess Cancer Risk CNRS(i,p,t)*** for Initially Existent Radionuclides (i) and Pathways (p)
and Fraction of Total Risk at t= 1.000E+03 years

Water Independent Pathways (Inhalation excludes radon)

Radio-	Ground		Inhalation		Radon		Plant		Meat		Milk		Soil	
Nuclide	risk	fract.	risk	fract.	risk	fract.	risk	fract.	risk	fract.	risk	fract.	risk	fract.
Cs-137	1.126E-16	0.0000	4.334E-22	0.0000	0.000E+00	0.0000	3.545E-18	0.0000	3.100E-19	0.0000	1.012E-19	0.0000	2.788E-20	0.0000
Pb-210	1.294E-23	0.0000	8.029E-24	0.0000	0.000E+00	0.0000	5.505E-21	0.0000	1.882E-23	0.0000	9.170E-24	0.0000	1.732E-22	0.0000
Ra-226	3.868E-07	0.2474	2.380E-10	0.0002	0.000E+00	0.0000	1.367E-07	0.0874	4.443E-10	0.0003	3.230E-10	0.0002	3.115E-09	0.0020
Sr-90	7.806E-21	0.0000	1.505E-23	0.0000	0.000E+00	0.0000	6.079E-19	0.0000	1.228E-20	0.0000	3.645E-21	0.0000	6.375E-22	0.0000
Total	3.868E-07	0.2474	2.380E-10	0.0002	0.000E+00	0.0000	1.367E-07	0.0874	4.443E-10	0.0003	3.230E-10	0.0002	3.115E-09	0.0020

Total Excess Cancer Risk CNRS(i,p,t)*** for Initially Existent Radionuclides (i) and Pathways (p)
and Fraction of Total Risk at t= 1.000E+03 years

Water Dependent Pathways

Radio-	Water		Fish		Radon		Plant		Meat		Milk		All pathways	
Nuclide	risk	fract.	risk	fract.	risk	fract.	risk	fract.	risk	fract.	risk	fract.	risk	fract.
Cs-137	0.000E+00	0.0000	0.000E+00	0.0000	0.000E+00	0.0000	0.000E+00	0.0000	0.000E+00	0.0000	0.000E+00	0.0000	1.166E-16	0.0000
Pb-210	1.411E-20	0.0000	3.826E-23	0.0000	0.000E+00	0.0000	4.419E-22	0.0000	4.910E-24	0.0000	4.030E-24	0.0000	2.032E-20	0.0000
Ra-226	1.001E-06	0.6403	2.389E-09	0.0015	0.000E+00	0.0000	3.159E-08	0.0202	3.666E-10	0.0002	4.055E-10	0.0003	1.564E-06	1.0000
Sr-90	2.929E-18	0.0000	1.914E-21	0.0000	0.000E+00	0.0000	9.819E-20	0.0000	1.022E-20	0.0000	5.570E-21	0.0000	3.677E-18	0.0000
Total	1.001E-06	0.6403	2.389E-09	0.0015	0.000E+00	0.0000	3.159E-08	0.0202	3.666E-10	0.0002	4.055E-10	0.0003	1.564E-06	1.0000

***CNRSI(i,p,t) includes contribution from decay daughter radionuclides

ATTACHMENT 6

RESPONSE TO COMMENTS

This page intentionally left blank.

RESPONSE TO COMMENTS
DRAFT SURVEY UNIT PROJECT REPORTS FOR SURVEY UNITS 166, 169, 170, AND 172 (WORK PACKAGE 37)
PARCEL UC3 SANITARY SEWER AND STORM DRAIN REMOVAL PROJECT
HUNTERS POINT SHIPYARD
SAN FRANCISCO, CALIFORNIA

Comments from Ryan Miya, Ph.D.
Senior Hazardous Substances Scientist
San Francisco Peninsula Team Leader
Brownfields and Environmental Restoration Program – Berkeley
Department of Toxic Substances Control

Comments Dated: April 29, 2011

SPECIFIC COMMENTS TO ALL DRAFT SUPRs	RESPONSE
Comment 1. Section 3.2.1 – Trench Survey Unit.	
(a) Please provide the dates of excavation, sampling, and backfilling at each Survey Unit.	**Response 1a.** The Navy will provide this information in Section 4.0 of the Parcel UC3 Removal Action Completion Report (RACR), which will include Trench Survey Units 166, 169, 170, and 172.
(b) The total volume of material that was remediated from each trench survey unit identified as having contamination present that exceeded the release criteria should be presented in the text.	**Response 1b.** The Navy will provide this information in Section 4.0 of the RACR.
(c) Please verify if confirmation samples from each trench survey unit were also analyzed for Chemicals of Concern (COCs) associated with corresponding IR sites (for example, IR Site 56 COCs for Survey Unit 166 confirmation samples).	**Response 1c.** The Navy conducted additional soil analyses only if the excavated soil came from an identified Installation Restoration site. If the excavated soil was not obtained from an Installation Restoration site, only radiological analyses were performed. The Navy did not analyze any of the trench unit samples for the COCs associated with IR Site 56; only radiological analyses were performed.
Comment 2. Section 3.2.2 – Excavated Soil Units/Import Fill Material. Please specify if any additional analyses on the import fill material/excavated soil units beyond the radiological analyses were conducted in order to verify the quality of the backfill.	**Response 2.** The Navy conducted additional soil analyses only if the origin of the excavated soil was from an identified Installation Restoration site. If the excavated soil was not obtained from an Installation Restoration site, only radiological analyses were performed. However, additional analyses for COCs were performed on the import fill material as specified in Section 4.2

ED_006787_00017608-01260

	of the Sampling and Analysis Plan. The Navy has provided this information in the Survey Unit Project Report Abstract, Section 3.2.6.
Comment 3. General comment. Please briefly explain why there are no pipe segment scans (e.g. majority of pipe segments disintegrated upon removal, etc.).	**Response 3.** Section 3.2 of each Survey Unit Project Report provides results of the gamma scans of the trench unit. In addition, piping and manholes that did not have enough sediment present from which to collect a sample for analysis were disposed of as low-level radioactive waste.

RESPONSE TO COMMENTS
DRAFT SURVEY UNIT PROJECT REPORTS FOR SURVEY UNITS 166, 169, 170, AND 172 (WORK PACKAGE 37)
PARCEL UC3 SANITARY SEWER AND STORM DRAIN REMOVAL PROJECT
HUNTERS POINT SHIPYARD
SAN FRANCISCO, CALIFORNIA

Comments from Larry Morgan
Senior Health Physicist
Environmental Management Branch
California Department of Public Health

Comments Dated: April 25, 2011

SPECIFIC COMMENTS TO ALL DRAFT SUPRs	RESPONSE
Comment 1. Page 1-1, Section 1.2, "Background", does not mention radionuclides of concern. Please include them.	**Response 1.** The sanitary sewer and storm drain systems are being removed due to the potential for radioactive materials to be present inside the piping and surrounding soils. The Navy has provided information concerning radionuclides of concern in the Survey Unit Project Report Abstract (SUPRA), Section 2.0. The intent of the SUPRA is to eliminate the need for repeating information applicable to all sanitary sewer and storm drain survey units.
Comment 2. Page 3-1, Section 3.2.1, Trench Survey Unit Work Package 37, states that pipe sediments were identified during the performance of gamma scans in Trench Unit 166, 169, 170 and 172. Did each Trench Unit have the pipe completely removed?	**Response 2.** The Navy removed the piping from each trench unit and disposed of the piping as low-level radioactive waste. A complete discussion of all radiological surveys performed on pipes/manholes excavated from the Survey Units 166, 169, 170, and 172 as well as any sediment sample analytical results will be provided in Section 4.0 of the RACR and summarized in Tables 3-5 and 3-6.
Comment 3. Page 3-1, Section 3.2.1, Trench Survey Unit Package 37, where was the soil removed around the pipe? Was there additional soil samples collected after the removal of the pipe?	**Response 3.** Soils removed from each trench unit were transported to a Radiological Screening Yard for screening and sampling. The Navy did not collect any soil samples until the piping was removed from each trench unit.

ED_006787_00017608-01262

FINAL SURVEY UNIT 173 PROJECT REPORT

DCN: EMAC-8823-0003-0085

May 26, 2011

NAVFAC Restoration Record Number

N00217-002889

DEPARTMENT OF THE NAVY
BASE REALIGNMENT AND CLOSURE
PROGRAM MANAGEMENT OFFICE WEST
1455 FRAZEE RD, SUITE 900
SAN DIEGO, CA 92108-4310

Ser BPMOW.CY\0622

MAY 27 2011

Mr. Mark Ripperda
U.S. Environmental Protection Agency
Region IX
75 Hawthorne Street, (SFD 8-1)
San Francisco, CA 94105-3901

Mr. Larry Morgan
California Department of Public Health
1616 Capitol Avenue, (MS 7402)
P.O. Box 997377
Sacramento, CA 95899-7377

Dear Regulatory Team Members:

Enclosed are the Final Survey Unit Project Reports (SUPRs) for Survey Units 173, 174, 175, and 176, Parcel UC-3 Sanitary Sewer and Storm Drain Removal Project, Hunters Point Shipyard, San Francisco, California. Included as an attachment to the reports are responses to comments from the draft version. This package of enclosures is collectively known as Work Package #39. Technical review of the enclosed reports has been completed by the Navy's Radiological Affairs Support Office.

The Navy anticipates Parcel UC-3 to be the future name of the utility corridor encompassing Crisp Road and the rail line that extends off the base, which is currently part of Parcel E. Parcel UC-3 will be separated from Parcel E in the Proposed Plan. For the purpose of these SUPR reports and to avoid confusion in the upcoming UC-3 radiological Removal Action Completion Report (RACR), the parcel name "UC-3" will be used to describe this portion of Parcel E. Please see Figure 1-1 of the attached reports for location of Parcel UC-3.

The Navy is providing the enclosed reports for your review only. A regulatory free release letter is not requested at this time. As previously agreed, Final SUPR acceptance will be documented as part of regulatory acceptance of the Parcel UC-3 RACR, which is a summation of all SUPRs along Crisp Road in Parcel E. If you have questions regarding the enclosed reports, please contact Chris Yantos at (619) 532-0912, or me at (619) 532-0913.

Sincerely,

KEITH FORMAN
BRAC Environmental Coordinator
By direction of the Director

Enclosures: (1) Final Survey Unit 173 Project Report, May 2011
(2) Final Survey Unit 174 Project Report, May 2011
(3) Final Survey Unit 175 Project Report, May 2011
(4) Final Survey Unit 176 Project Report, May 2011

Copy to:

Ms. Diane Silva (2 Hard Copies, 1 unbound, CD)
NAVFAC Southwest (Code EV33)
Naval Base San Diego
2965 Mole Rd., Bldg. 3519
San Diego, CA 92136

Ms. Karla Brasaemle (Hard Copy and CD)
90 New Montgomery St., Suite 710
San Francisco, CA 94105

Ms. Laurie Lowman (3 Hard Copies and 3 CDs)
Building 1971
NWS P.O. Drawer 260
Yorktown, VA. 23691-0260

Ms. Ryan Miya (Hard Copy and CD)
Department of Toxic Substance Control
700 Heinz Avenue, Bldg. F, Suite 200
Berkeley, CA 94710

Ms. Amy Brownell (CD Only)
SF Department of Public Health
1390 Market St., Suite 210
San Francisco, Ca 94102

Michael Sharpless (CD Only)
Paul Hastings, et al.
55 2nd Street, 24th Floor
San Francisco, CA 94104-2635

Ms. Elaine Warren (CD only)
Office of the City Attorney
City Hall, Room 234
1 Dr. Carlton B. Goodlett Place
San Francisco, CA 94102-4682

Ms. Tamara Davidson (CD Only)
SF Health Department
101 Grove Street, Rm 217
San Francisco, CA 94102

Ms. Leslie Lundgren (Hard Copy and CD)
33 New Montgomery Street, Suite 2000
San Francisco, CA 94105

Ms. Janice Torbet (Hard Copy and CD)
100 Larkin Street
Gov. Information Ctr., 5th Floor
San Francisco, CA 94102

Ms. Dorinda Shipman (Hard Copy and CD)
Treadwell and Rollo
555 Montgomery St., Suite 1300
San Francisco, CA 94111

Ms. Linda Malvino (Hard Copy and CD)
Mactec Engineering and Consulting, Inc.
1465 North McDowell Blvd, Suite 200
Petaluma, CA 94954

Mr. Stephen Proud (CD Only)
Lennar/BVHP
1 California St., Suite 2700
San Francisco, CA 94111

Mr. Michael McGowan (CD only)
1331 Evans Avenue
San Francisco, CA 94124

Mr. Stan DeSouza (CD Only)
1680 Mission St., First Floor
San Francisco, CA 94103-2414

Mr. Randy Brandt (CD Only)
1111 Broadway, 6th Floor
Oakland, CA 94607

ED_006787_00017608-01265

Base Realignment and Closure
Program Management Office West
1455 Frazee Road, Suite 900
San Diego, California 92108-4310

CONTRACT NO. N62473-08-D-8823
CTO NO. 0003

FINAL

SURVEY UNIT 173 PROJECT REPORT

May 26, 2011

DCN: EMAC-8823-0003-0085

PARCEL UC3 SANITARY SEWER
AND STORM DRAIN REMOVAL PROJECT
HUNTERS POINT SHIPYARD
SAN FRANCISCO, CALIFORNIA

Base Realignment and Closure
Program Management Office West
1455 Frazee Road, Suite 900
San Diego, California 92108-4310

CONTRACT NO. N62473-08-D-8823
CTO NO. 0003

FINAL

SURVEY UNIT 173 PROJECT REPORT

May 26, 2011

PARCEL UC3 SANITARY SEWER AND STORM DRAIN REMOVAL PROJECT HUNTERS POINT SHIPYARD SAN FRANCISCO, CALIFORNIA

DCN: EMAC-8823-0003-0085

Prepared by:

TETRA TECH EC, INC.
1230 Columbia Street, Suite 750
San Diego, California 92101-8536

Daryl DeLong
Technical Lead

Erik Abkemeier, CHP, PE, CSP, CHMM
Radiation Safety Officer

Kent Weingardt
Project Manager

TABLE OF CONTENTS

PAGE

ABBREVIATIONS AND ACRONYMS iii

1.0 INTRODUCTION 1-1
1.1 PURPOSE 1-1
1.2 BACKGROUND 1-1

2.0 RELEASE CRITERIA 2-1

3.0 FINAL STATUS SURVEYS 3-1
3.1 OBJECTIVE OF THE FINAL STATUS SURVEY 3-1
3.2 SURVEY UNIT 3-1
3.2.1 Trench Survey Unit 3-1
3.2.2 Excavated Soil Units 3-3
3.2.3 Import Fill Material 3-7
3.3 REFERENCE AREA 3-7

4.0 LABORATORY ANALYSIS 4-1

5.0 STATISTICAL TESTS 5-1

6.0 DOSE MODELING 6-1
6.1 MODELING INPUT PARAMETERS USING LARGER OF MDL OR REPORTED ACTIVITY 6-1
6.2 DOSE AND RISK MODELING RESULTS 6-2

7.0 RECOMMENDATION OF FINAL UNRESTRICTED RELEASE 7-1
7.1 DERIVED CONCENTRATION GUIDELINES 7-1
7.2 DCGL MODELING 7-1
7.3 AS LOW AS REASONABLY ACHIEVABLE 7-1
7.4 ENVIRONMENTAL ALARA PROCESS 7-1
7.4.1 Identification of Potential Radiological Impacts 7-2
7.4.2 Review of Radiological Impacts 7-2
7.4.3 Performance of Qualitative ALARA Analyses 7-2
7.4.4 Performance of Quantitative ALARA Analyses 7-3
7.5 ALARA ANALYSIS RESULTS 7-4
7.6 RECOMMENDATIONS 7-4

8.0 REFERENCES 8-1

TABLE OF CONTENTS
(Continued)

PAGE

TABLES

Table 3-1 Class 1 Soil Measurements – Trench Unit 173 3-2

Table 3-2 Class 1 Soil Measurements – Excavated Soil Unit 281 3-4

Table 3-3 Class 1 Soil Measurements – Excavated Soil Unit 284 3-6

Table 4-1 Survey Unit 173 Laboratory Results Comparison (pCi/g) 4-2

Table 6-1 Modeling Parameters Using Larger of MDL or Reported Activity Concentrations 6-1

Table 6-2 Dose and Risk Modeling Summary 6-2

FIGURES

Figure 1-1 Parcel UC3 Survey Unit Key Plan

Figure 3-1 Parcel UC3 Survey Unit 173, Area 16

ATTACHMENTS

Attachment 1 Trench Unit 173 Radiation/Contamination Survey Form (on CD only)

Attachment 2 Laboratory Analysis Reports for Trench Unit 173 (on CD only)

Attachment 3 Excavated Soil Unit Scan Data (on CD only)

Attachment 4 Excavated Soil Unit Gamma Spectroscopy Reports (on CD only)

Attachment 5 Excavated Soil Unit ^{90}Sr Results (on CD only)

Attachment 6 Quality Assurance Sample Results (on CD only)

Attachment 7 Backfill Material RESRAD Report (on CD only)

Attachment 8 Trench Unit RESRAD Report (on CD only)

Attachment 9 Response to Comments

ABBREVIATIONS AND ACRONYMS

ALARA	as low as reasonably achievable
AM	Action Memorandum
^{214}Bi	bismuth-214
^{137}Cs	cesium-137
DCGL	derived concentration guideline level
EPA	U.S. Environmental Protection Agency
FSS	Final Status Survey
HPS	Hunters Point Shipyard
IR	Installation Restoration (Program)
keV	kiloelectron volt
MDA	minimum detectable activity
MDL	method detection limit
mrem/y	millirems per year
^{214}Pb	lead-214
pCi/g	picocuries per gram
^{226}Ra	radium-226
RASO	Radiological Affairs Support Office
ROC	radionuclide of concern
RPD	relative percent difference
^{90}Sr	strontium-90
SUPR	Survey Unit Project Report
VSP	Visual Sample Plan

ED_006787_00017608-01270

This page intentionally left blank.

1.0 INTRODUCTION

1.1 PURPOSE

This Survey Unit Project Report (SUPR) documents the work performed in Survey Unit 173 (inclusive of the trench and the associated excavated soil and import fill material used as backfill). The work was conducted under the final Base-wide Storm Drain and Sanitary Sewer Removal Work Plan, Revision 4 (TtEC 2010a). This SUPR summarizes the scope, approach, and radiological surveys resulting from the removal of the sanitary sewer and storm drains located within Area 16 in Parcel UC3 at Hunters Point Shipyard (HPS), San Francisco, California.

Information that was provided in the SUPRs Abstract (TtEC 2010b) will be repeated only if there were exceptions to the information specific to Survey Unit 173.

1.2 BACKGROUND

Survey Unit 173 is the net sum of Trench Unit 173, excavated soil from Excavated Soil Units 281 and 284, and a volume of import fill material, which was used for backfill. There are five trench segments associated with Survey Unit 173. None of the trench segments are located in Installation Restoration (IR) sites. In addition, one manhole was removed from Survey Unit 173.

Survey Unit 173 is located in Parcel UC3 within Area 16 as identified on Figure 1-1. Trench Unit 173 is located along the western end of Crisp Road, across the street from Building 831. The footprint of Trench Unit 173 was 485 linear feet. The total surface area was 7,470.15 square feet (694 square meters) of actual excavated trench, in varying depths up to 7 feet below ground surface.

This page intentionally left blank.

2.0 RELEASE CRITERIA

Release criteria information for Survey Unit 173 is presented in Section 2.0 of the SUPRs Abstract (TtEC 2010b). No additional radionuclides of concern (ROCs) were identified.

This page intentionally left blank.

3.0 FINAL STATUS SURVEYS

3.1 OBJECTIVE OF THE FINAL STATUS SURVEY

The objective of the Final Status Survey (FSS) was to demonstrate that identified residual radioactivity levels inside the excavated trench and within the excavated soils and import fill material used as backfill met the release criteria.

3.2 SURVEY UNIT

Survey Unit 173 is located within Area 16 and consists of two different types of survey units: trench and excavated soil. Survey Unit 173 is the sum of Trench Unit 173, excavated soil from Excavated Soil Units 281 and 284, and a volume of import fill material, which was used for backfill. There are five trench segments associated with Trench Unit 173. None of the trench segments are located in IR sites. In addition, one manhole was removed from Trench Unit 173. The trench unit and each individual excavated soil unit were systematically sampled independently.

3.2.1 Trench Survey Unit

Scan surveys and systematic sampling were performed in Trench Unit 173. Figure 3-1 shows the approximate systematic sampling locations, and provides the lengths of piping segments and locally assigned identification for each trench segment. Trench Unit 173 had a total surface area of 694 square meters. Systematic postexcavation samples were collected after a grid was established using Visual Sample Plan (VSP).

No measurements above the investigation level were identified during the performance of gamma scans in Trench Unit 173. Therefore, no additional surveys or sampling was performed. The trench unit gamma scan ranges, investigation level, and static measurement values are provided in Attachment 1.

VSP was used to generate 18 systematic sample locations based on a random start point and a triangular grid. None of the sample results identified activity above the release criteria for any ROC. A summary of the 18 systematic sample results is provided in Table 3-1.

The cesium-137 (^{137}Cs) results show 14 of the 18 values less than the reported minimum detectable activity (MDA) and had flags identified that will require the values to be considered less than the MDA. The radium-226 (^{226}Ra) results show 15 of 18 values less than the MDA or had flags identified that require the values to be considered less than the reported MDA.

TABLE 3-1

Class 1 Soil Measurements - Trench Unit 173

Sample No.	Date	Time	^{137}Cs	Flag	MDA	≥MDA	^{90}Sr	Flag	MDA	≥MDA	^{226}Ra	Flag	MDA	≥MDA
			Results (pCi/g)											
1	8/13/2010	9:30:00	-0.002	#A	0.045	0.045					0.093	A	0.975	0.975
2	8/13/2010	9:35:00	-0.013	#A	0.024	0.024					0.433	A	0.870	0.870
3	8/13/2010	9:40:00	-0.002	#A	0.032	0.032					0.873		0.853	0.873
4	8/13/2010	9:45:00	-0.003	#A	0.025	0.025					0.450	A	0.897	0.897
5	8/13/2010	9:50:00	0.021	A	0.023	0.023					0.358	A	0.747	0.747
6	8/13/2010	9:55:00	0.035		0.030	0.035	0.063	U	0.124	0.124	0.852		0.768	0.852
7	8/13/2010	10:00:00	-0.004	#A	0.022	0.022					0.127	A	1.150	1.150
8	8/13/2010	10:05:00	0.014	A	0.030	0.030					0.952		0.709	0.952
9	8/13/2010	10:10:00	-0.007	#A	0.034	0.034					0.635	A	0.874	0.874
10	8/13/2010	10:15:00	0.018	A	0.022	0.022					0.424	A	0.503	0.503
11	8/13/2010	10:20:00	0.036		0.025	0.036					-0.101	#A	0.636	0.636
12	8/13/2010	10:25:00	-0.006	#A	0.025	0.025					0.275	A	0.528	0.528
13	8/13/2010	10:30:00	0.074		0.029	0.074	0.013	U	0.137	0.137	-0.175	#A	0.653	0.653
14	8/13/2010	10:35:00	0.001	A	0.026	0.026					-0.741	#A	0.728	0.728
15	8/13/2010	10:40:00	0.002	A	0.034	0.034					0.144	A	0.649	0.649
16	8/13/2010	10:45:00	-0.008	#A	0.011	0.011					-0.410	#A	0.893	0.893
17	8/13/2010	10:50:00	0.002	A	0.018	0.018					0.173	A	0.591	0.591
18	8/13/2010	10:55:00	0.036		0.024	0.036					-0.160	#A	0.634	0.634
		mean				**0.031**				**0.131**				**0.778**
		std dev				**0.013**				**0.009**				**0.174**
		median				**0.028**				**0.131**				**0.800**

Notes:
Information concerning flags associated with the on-site laboratory data can be found in Section 4.3 and a discussion of uncertainty can be found in Section 4.8 of the SUPRs Abstract (TtEC 2010b).

Abbreviations and Acronyms:
^{137}Cs – cesium-137
MDA – minimum detectable activity
pCi/g – picocuries per gram
^{226}Ra – radium-226
^{90}Sr – strontium-90
std dev – standard deviation
SUPR – Survey Unit Project Report

The "#" flag indicates that "All peaks for activity calculation had bad shape." The "A" flag indicates "Activity is reported but the activity is <MDA." These flag indications are printed on the on-site laboratory reports in Attachment 2. Section 4.3 of the SUPRs Abstract (TtEC 2010b) also discusses these flags in more detail. For the "#" flag, the SUPRs Abstract (TtEC 2010b) indicates that the peak did not have a proper Poisson shape and that these peaks are suspect. For the "A" flag, the SUPRs Abstract (TtEC 2010b) specifies that the activity calculation performed on the peaks for the ROC yields a lower value than the calculation for the MDA. This identifies that a calculation was performed and the peaks were found, but the resulting activity was lower than the MDA.

ED_006787_00017608-01277

Table 3-1 also contains a summary of the analytical results for radionuclides analyzed by methods other than gamma spectroscopy. The strontium-90 (^{90}Sr) results indicate that for both samples the results are less than the MDA, as designated by the "U" qualifier flag.

Summary statistics (standard deviation, median, and the mean activity greater than or equal to the MDA) are calculated and reported at the bottom of Table 3-1 for all radioanalytical results.

Complete laboratory analytical reports for each Trench Unit 173 soil sample, including biased and duplicate samples, are presented in Attachment 2.

3.2.2 Excavated Soil Units

Excavated Soil Units 281 and 284 were used to backfill Trench Unit 173. The gamma scan of Excavated Soil Units 281 and 284 identified measurements above the investigation level. Therefore, additional samples were collected from these excavated soil units. The scan data are presented in Attachment 3.

As shown on Figure 3-2 of the SUPRs Abstract (TtEC 2010b), 18 systematic soil samples were collected at each excavated soil unit. Each sample was analyzed at the on-site laboratory by gamma spectroscopy. Two samples of each excavated soil unit were also analyzed for ^{90}Sr. Individual gamma spectroscopy reports are presented in Attachment 4. Results for ^{90}Sr are presented in Attachment 5.

3.2.2.1 Excavated Soil Unit 281

An additional 18 biased samples were collected from Excavated Soil Unit 281. One of the biased sample results identified ^{226}Ra activity above the release criteria at 1.49 picocuries per gram (pCi/g). In addition, one of the systematic samples identified ^{137}Cs activity at 0.119 pCi/g. Six additional samples were collected to further characterize the areas where ^{137}Cs and ^{226}Ra contamination was present. None of the additional characterization samples identified activity above the release criteria for any ROC.

Using the additional sampling results, the contaminated areas were bounded by four clean sample points and remediated.

VSP was used to generate a second set of 18 systematic sample locations (samples 43 through 60). Sample results indicated that ^{226}Ra activity above the release criteria was still present at three locations ranging from 1.54 to 1.95 pCi/g. Eight additional samples were collected to further characterize the contaminated areas. One of the characterization sample results identified ^{226}Ra activity above the release criteria at 1.80 pCi/g.

Using the additional sampling results, the contaminated area was bounded by four clean sample points and remediated. A total of 18 cubic yards of soil was remediated from this excavated soil unit.

VSP was used to generate the final 18 systematic sample locations (samples 69 through 86). None of the sample results identified activity above the release criteria for any ROC. Sample numbers 73 and 79 were randomly selected to be analyzed for ^{90}Sr. A summary of the systematic sample results for Excavated Soil Unit 281 is provided in Table 3-2.

TABLE 3-2

Class 1 Soil Measurements - Excavated Soil Unit 281

Sample No.	Date	Time	^{137}Cs	Flag	MDA	≥MDA	^{90}Sr	Flag	MDA	≥MDA	^{226}Ra	Flag	MDA	≥MDA
			Results (pCi/g)											
69	7/26/2010	10:02:00	0.010	A	0.042	0.042					1.096		1.090	1.096
70	7/26/2010	10:08:00	0.021	A	0.034	0.034					0.356	A	0.872	0.872
71	7/26/2010	10:10:00	0.032	A	0.036	0.036					0.282	A	1.060	1.060
72	7/26/2010	10:15:00	0.025	A	0.043	0.043					0.796	A	0.957	0.957
73	7/26/2010	10:35:00	0.013	A	0.025	0.025	0.038	U	0.106	0.106	1.089		0.588	1.089
74	7/26/2010	10:23:00	0.032	A	0.044	0.044					0.458	A	1.100	1.100
75	7/26/2010	10:20:00	0.003	A	0.039	0.039					0.264	A	1.050	1.050
76	7/26/2010	10:05:00	0.032	A	0.035	0.035					0.727	A	0.902	0.902
77	7/26/2010	10:12:00	-0.008	#A	0.011	0.011					0.120	A	0.804	0.804
78	7/26/2010	10:40:00	0.078		0.028	0.078					0.984		0.690	0.984
79	7/26/2010	10:33:00	0.035		0.026	0.035	0.248		0.149	0.248	1.096		0.701	1.096
80	7/26/2010	10:29:00	0.033	A	0.042	0.042					0.703	A	1.000	1.000
81	7/26/2010	10:52:00	0.021	A	0.027	0.027					1.018		0.628	1.018
82	7/26/2010	10:56:00	0.029	A	0.029	0.029					0.270	A	0.729	0.729
83	7/26/2010	11:05:00	-0.014	#A	0.023	0.023					0.962		0.598	0.962
84	7/26/2010	11:20:00	0.081		0.029	0.081					1.257		0.702	1.257
85	7/26/2010	11:25:00	0.051		0.029	0.051					1.190		0.714	1.190
86	7/26/2010	11:30:00	0.023	A	0.038	0.038					-0.315	#A	0.223	0.223
		mean				**0.040**				**0.177**				**0.966**
		std dev				**0.017**				**0.100**				**0.226**
		median				**0.037**				**0.177**				**1.009**

Notes:
Information concerning flags associated with the on-site laboratory data can be found in Section 4.3 and a discussion of uncertainty can be found in Section 4.8 of the SUPRs Abstract (TtEC 2010b).

Abbreviations and Acronyms:
^{137}Cs – cesium-137
MDA – minimum detectable activity
pCi/g – picocuries per gram
^{226}Ra – radium-226
^{90}Sr – strontium-90
std dev – standard deviation
SUPR – Survey Unit Project Report

The ^{137}Cs results show 14 of the 18 values less than the reported MDA and had flags identified that will require the values to be considered less than the MDA. The ^{226}Ra results show 10 of the 18 values less than the MDA and had flags identified that require the values to be considered less than the reported MDA.

ED_006787_00017608-01279

The "#" flag indicates that "All peaks for activity calculation had bad shape." The "A" flag indicates "Activity is reported but the activity is <MDA." These flag indications are printed on the on-site laboratory reports in Attachment 4. Section 4.3 of the SUPRs Abstract (TtEC 2010b) also discusses these flags in more detail. For the "#" flag, the SUPRs Abstract (TtEC 2010b) indicates that the peak did not have a proper Poisson shape and that these peaks are suspect. For the "A" flag, the SUPRs Abstract (TtEC 2010b) specifies that the activity calculation performed on the peaks for the ROC yields a lower value than the calculation for the MDA. This identifies that a calculation was performed and the peaks were found, but the resulting activity was lower than the MDA.

Table 3-2 also contains a summary of the analytical results for radionuclides analyzed by methods other than gamma spectroscopy. The ^{90}Sr results indicate that for one sample, the result is less than the MDA, as designated by the "U" qualifier flag. The other sample did not have a qualifier flag as the result was greater than the MDA but less than the release criteria.

Summary statistics (standard deviation, median, and the mean activity greater than or equal to the MDA) are calculated and reported at the bottom of Table 3-2 for all radioanalytical results.

Complete laboratory analytical reports for each Excavated Soil Unit 281 soil sample, including biased and duplicate samples, are presented in Attachment 4.

3.2.2.2 Excavated Soil Unit 284

An additional 18 biased samples were collected from Excavated Soil Unit 284. Six of the biased sample results identified ^{226}Ra activity above the release criteria from 1.49 to 2.14 pCi/g. In addition, one of the biased samples identified ^{137}Cs activity at 0.167 pCi/g.

Two of the systematic sample results identified ^{226}Ra activity above the release criteria at 1.79 and 1.52 pCi/g. Additionally, one of the systematic samples identified ^{137}Cs activity at 0.118 pCi/g. Based on this information, 19 additional samples were collected to further characterize the extent of ^{137}Cs and ^{226}Ra contamination. Five of the characterization sample results identified ^{226}Ra activity above the release criteria from 1.50 to 2.27 pCi/g.

Using the additional sampling results, each contaminated area was bounded by four clean sample points and remediated.

VSP was used to generate a second set of 18 systematic sample locations (samples 56 through 83). Sample results identified ^{137}Cs activity above the release criteria at one location at 0.122 pCi/g. Three additional samples were collected to further characterize the extent of ^{137}Cs contamination. One of the characterization sample results identified ^{226}Ra activity above the release criteria at 1.61 pCi/g.

Using the additional sampling results, the contaminated area was bounded by four clean sample points and remediated. A total of 92 cubic yards of soil was remediated from this excavated soil unit.

VSP was used to generate the final 18 systematic sample locations (samples 77 through 94). Sample numbers 80 and 89 were randomly selected to be analyzed for ^{90}Sr. None of the sample results identified activity above the release criteria for any ROC. A summary of the systematic sample results for Excavated Soil Unit 284 is provided in Table 3-3.

TABLE 3-3

Class 1 Soil Measurements - Excavated Soil Unit 284

Sample No.	Date	Time	^{137}Cs	Flag	MDA	≥MDA	^{90}Sr	Flag	MDA	≥MDA	^{226}Ra	Flag	MDA	≥MDA
			Results (pCi/g)											
77	8/9/2010	12:30:00	0.007	A	0.026	0.026					-0.384	#A	0.272	0.272
78	8/9/2010	12:35:00	0.026	A	0.038	0.038					0.505	A	0.856	0.856
79	8/9/2010	12:40:00	0.023	A	0.047	0.047					1.175		1.030	1.175
80	8/9/2010	12:45:00	0.109		0.028	0.109	-0.128	U	0.242	0.242	1.220		0.748	1.220
81	8/9/2010	12:50:00	0.027	A	0.041	0.041					0.449	A	1.170	1.170
82	8/9/2010	12:55:00	0.005	A	0.028	0.028					0.851		0.632	0.851
83	8/9/2010	13:00:00	0.006	A	0.033	0.033					1.122		1.010	1.122
84	8/9/2010	13:05:00	0.031		0.023	0.031					1.379		0.650	1.379
85	8/9/2010	13:10:00	-0.006	#A	0.034	0.034					0.881		0.829	0.881
86	8/9/2010	13:15:00	0.030	A	0.039	0.039					1.213	#	0.891	1.213
87	8/9/2010	13:20:00	0.050		0.043	0.050					0.301	A	1.050	1.050
88	8/9/2010	13:25:00	0.012	A	0.028	0.028					0.973		0.707	0.973
89	8/9/2010	13:30:00	0.018	A	0.026	0.026	0.048	U	0.105	0.105	1.190		0.595	1.190
90	8/9/2010	13:35:00	0.015	A	0.040	0.040					1.107	A	1.110	1.110
91	8/9/2010	13:40:00	0.027	A	0.044	0.044					0.381	A	0.987	0.987
92	8/9/2010	13:45:00	0.045		0.028	0.045					0.132	A	0.832	0.832
93	8/9/2010	13:50:00	0.013	A	0.041	0.041					0.869	A	0.972	0.972
94	8/9/2010	13:55:00	0.034		0.028	0.034					1.417		0.601	1.417
		mean				**0.041**				**0.174**				**1.037**
		std dev				**0.019**				**0.097**				**0.258**
		median				**0.039**				**0.174**				**1.080**

Notes:
Information concerning flags associated with the on-site laboratory data can be found in Section 4.3 and a discussion of uncertainty can be found in Section 4.8 of the SUPRs Abstract (TtEC 2010b).

Abbreviations and Acronyms:
^{137}Cs – cesium-137
MDA – minimum detectable activity
pCi/g – picocuries per gram
^{226}Ra – radium-226
^{90}Sr – strontium-90
std dev – standard deviation
SUPR – Survey Unit Project Report

The ^{137}Cs results show 13 of the 18 values less than the reported MDA and had flags identified that will require the values to be considered less than the MDA. The ^{226}Ra results show 8 of the 18 values less than the MDA and had flags identified that require the values to be considered less than the reported MDA. In addition, one of the samples that identified ^{226}Ra activity greater than

ED_006787_00017608-01281

the reported MDA had a flag associated with the activity that will require the value to be considered less than the MDA. However, the reported activity will be utilized for dose modeling purposes.

The "#" flag indicates that "All peaks for activity calculation had bad shape." The "A" flag indicates "Activity is reported but the activity is <MDA." These flag indications are printed on the on-site laboratory reports in Attachment 4. Section 4.3 of the SUPRs Abstract (TtEC 2010b) also discusses these flags in more detail. For the "#" flag, the SUPRs Abstract (TtEC 2010b) indicates that the peak did not have a proper Poisson shape and that these peaks are suspect. For the "A" flag, the SUPRs Abstract (TtEC 2010b) specifies that the activity calculation performed on the peaks for the ROC yields a lower value than the calculation for the MDA. This identifies that a calculation was performed and the peaks were found, but the resulting activity was lower than the MDA.

Table 3-3 also contains a summary of the analytical results for radionuclides analyzed by methods other than gamma spectroscopy. The ^{90}Sr results indicate that for both samples the results are less than the MDA, as designated by the "U" qualifier flag.

Summary statistics (standard deviation, median, and the mean activity greater than or equal to the MDA) are calculated and reported at the bottom of Table 3-3 for all radioanalytical results.

Complete laboratory analytical reports for each Excavated Soil Unit 284 soil sample, including biased and duplicate samples, are presented in Attachment 4.

3.2.3 Import Fill Material

Approximately 333 cubic yards of import fill material was required to complete backfilling activities. Import fill sample information for Survey Unit 173 is presented in Section 3.2.6 of the SUPRs Abstract (TtEC 2010b).

3.3 REFERENCE AREA

Reference area sample information for Survey Unit 173 is presented in Section 3.3 of the SUPRs Abstract (TtEC 2010b).

This page intentionally left blank.

4.0 LABORATORY ANALYSIS

Information concerning laboratory analysis is presented in Section 4.0 of the SUPRs Abstract (TtEC 2010b). Specifically, information concerning flags associated with the on-site laboratory data can be found in Section 4.3 and a discussion of uncertainty can be found in Section 4.8 of the SUPRs Abstract (TtEC 2010b). The average count time for the off-site laboratory was 35 minutes, while the average count time for the on-site laboratory was 82.5 minutes. The MDAs and method detection limits (MDLs) for the on-site and off-site laboratories were well below the release criteria for any ROCs. The TestAmerica MDLs were 0.044 pCi/g for ^{137}Cs and 0.066 pCi/g for ^{226}Ra. The on-site laboratory MDAs averaged 0.028 pCi/g for ^{137}Cs and 0.705 pCi/g for ^{226}Ra.

Results of the HPS and off-site laboratory data were reviewed to ensure that the activities for all ROCs were below the release criteria. These data were then evaluated by the Laboratory Manager. The on-site laboratory analyzed the samples directly for ^{226}Ra using the U.S. Environmental Protection Agency (EPA) 901.1 MOD method and calculating the ^{226}Ra activity from the 3.6 percent abundant 186.2 kiloelectron-volt (keV) gamma spectrum line for ^{226}Ra. The off-site laboratory counted the samples using the EPA 901.1 MOD method, and the ^{226}Ra results were calculated and reported from the 46.09 percent abundant 609.31 keV gamma spectrum line of bismuth-214 (^{214}Bi) after an in-growth period of greater than 21 days to allow the ^{214}Bi to approach secular equilibrium with ^{226}Ra.

To perform a detailed comparison, sample results were placed into a spreadsheet so that data could be compared directly to each laboratory. The review consisted of identifying sample results that reported activity above the MDA/MDL for any ROC. Once identified, the next step was to determine if either laboratory reported results above the MDA/MDL for the same samples. The on-site laboratory reported ^{137}Cs activity above the MDA for four samples while the off-site laboratory did not report activity above the MDL for any sample. Therefore, no direct comparison was made.

Both laboratories reported ^{226}Ra activity above the MDA for all six samples. As a result, the ^{226}Ra activities for all samples were compared directly for precision. Results of the comparison showed relative percent differences (RPDs) of 16.41 to 97.95. Since the on-site laboratory reported higher ^{226}Ra activity than the off-site laboratory and some of the RPDs were not within 30, as stated in the Sampling and Analysis Plan (TtEC 2010a), no additional comparison was required. However, as an added comparison for informational purposes, the daughter isotopes of ^{226}Ra (^{214}Bi and lead-214 [^{214}Pb]) were compared.

When comparing the ^{214}Bi and ^{214}Pb activity, the results for all samples were comparable to the activity reported by the off-site laboratory. However, the highest ^{226}Ra activity reported by the off-site laboratory was 1.17 pCi/g, which is well below the release criteria and well below the

ED_006787_00017608-01284

activity reported for the same sample processed in the on-site laboratory. In addition, the ^{226}Ra activity reported by either laboratory in all four samples was well below the release criteria. As a result, no further laboratory comparisons were made.

Table 4-1 presents a summary comparison of the on-site and off-site laboratory sample results. On-site laboratory sample results are provided in Attachments 2 and 4; quality assurance sample results from the off-site laboratory are provided in Attachment 6.

TABLE 4-1

SURVEY UNIT 173 LABORATORY RESULTS COMPARISON (pCi/g)

Sample ID	On-site Laboratory							Off-site Laboratory (QA)						
	Count Time (min)	^{137}Cs			^{226}Ra			Count Time (min)	^{137}Cs			^{226}Ra		
		Activity	MDA	2σ Error	Activity	MDA	2σ Error		Activity	MDL	2σ Error	Activity	MDL	2σ Error
03-PET-173-03	45	-0.002	0.032	0.049	0.873	0.853	1.064	30	0.000	0.044	0.054	0.299	0.072	0.133
03-PET-173-08	90	0.014	0.030	0.037	0.952	0.709	0.887	30	0.025	0.039	0.053	0.397	0.090	0.174
18-PG-C0281-84	90	0.081	0.029	0.041	1.257	0.702	0.886	30	-0.023	0.050	0.063	0.978	0.032	0.190
18-PG-C0281-85	90	0.051	0.029	0.039	1.190	0.714	0.893	30	0.006	0.046	0.051	0.949	0.062	0.221
18-PG-C0284-84	90	0.031	0.023	0.030	1.379	0.650	0.842	45	0.039	0.045	0.061	1.170	0.075	0.217
18-PG-C0284-94	90	0.034	0.028	0.036	1.417	0.601	0.784	45	0.003	0.041	0.050	0.871	0.062	0.176

Sample ID	On-site Laboratory							Off-site Laboratory (QA)						
	Count Time (min)	^{214}Bi			^{214}Pb			Count Time (min)	^{214}Bi			^{214}Pb		
		Activity	MDA	2σ Error	Activity	MDA	2σ Error		Activity	MDL	2σ Error	Activity	MDL	2σ Error
03-PET-173-03	45	0.672	0.060	0.159	0.722	0.084	0.192	30	0.299	0.072	0.133	0.540	0.060	0.128
03-PET-173-08	90	0.462	0.059	0.123	0.579	0.064	0.138	30	0.397	0.090	0.174	0.505	0.077	0.134
18-PG-C0281-84	90	1.090	0.060	0.162	0.979	0.061	0.136	30	0.978	0.032	0.190	1.240	0.062	0.209
18-PG-C0281-85	90	0.899	0.056	0.150	0.780	0.061	0.122	30	0.949	0.062	0.221	0.853	0.071	0.180
18-PG-C0284-84	90	0.970	0.057	0.141	1.122	0.063	0.161	45	1.170	0.075	0.217	1.140	0.087	0.188
18-PG-C0284-94	90	0.863	0.045	0.122	0.838	0.051	0.128	45	0.871	0.062	0.176	1.060	0.074	0.217

Notes:
Information concerning flags associated with the on-site laboratory data can be found in Section 4.3 and a discussion of uncertainty can be found in Section 4.8 of the SUPRs Abstract (TtEC 2010b).

Abbreviations and Acronyms:
^{214}Bi – bismuth-214
^{137}Cs – cesium-137
MDA – minimum detectable activity
MDL – method detection limit
min – minute
^{214}Pb – lead-214
pCi/g – picocuries per gram
QA – quality assurance
^{226}Ra – radium-226
SUPR – Survey Unit Project Report

ED_006787_00017608-01285

5.0 STATISTICAL TESTS

Because the majority of the data in Tables 3-1 through 3-3 were interpreted to be less than the MDA and all sample results were less than the release criteria for the ROCs, there was no basis for performing statistical tests for Survey Unit 173 or Excavated Soil Units 281 and 284.

This page intentionally left blank.

6.0 DOSE MODELING

6.1 MODELING INPUT PARAMETERS USING LARGER OF MDL OR REPORTED ACTIVITY

Table 6-1 shows the mean concentrations of ^{137}Cs, ^{226}Ra, and ^{90}Sr from using the actual activity and replacing it with the MDL value if the reported activity was less than the MDL. The activity used to model each radionuclide is based on the isotopic net concentration.

TABLE 6-1

MODELING PARAMETERS USING LARGER OF MDL OR REPORTED ACTIVITY CONCENTRATIONS

Survey Unit 173	Residual Activity ≥ MDL (pCi/g)			Volume of Material (yd^3)	Percent of Fill	Weighted Sum (pCi/g)		
	^{137}Cs	^{90}Sr	^{226}Ra			^{137}Cs	^{90}Sr	^{226}Ra
ESU 281	0.040	0.177	0.966	86	13.44%	0.0054	0.024	0.130
ESU 284	0.041	0.174	1.037	136	21.25%	0.0087	0.037	0.220
Import Fill	0.053	0.070	1.094	333	52.03%	0.0276	0.036	0.569
Backfill Material Average Activity	0.045	0.140	1.032	Weighted Sum Activity		0.042	0.097	0.919
Trench Unit Average Activity	0.031	0.131	0.778	Backfill Net Activity		0.042	0.097	0.198
Reference Area Average Activity	0.040	0.194	0.721	Trench Unit Net Activity		0.031	0.131	0.057

Abbreviations and Acronyms:
^{137}Cs – cesium-137
ESU – excavated soil unit
MDL – method detection limit
pCi/g – picocuries per gram
^{226}Ra – radium-226
^{90}Sr – strontium-90
yd^3 – cubic yard

Using the data provided in Table 6-1, the average net concentrations of residual radioactivity of material used as backfill in Survey Unit 173 were 0.042 pCi/g for ^{137}Cs, 0.097 pCi/g for ^{90}Sr, and 0.198 pCi/g for ^{226}Ra. The trench unit average net concentrations of residual radioactivity were 0.031 pCi/g for ^{137}Cs, 0.131 pCi/g for ^{90}Sr, and 0.057 pCi/g for ^{226}Ra.

ED_006787_00017608-01288

6.2 DOSE AND RISK MODELING RESULTS

Modeling resulted in a net residual dose of 3.074 millirems per year (mrem/y) with an increased cancer risk of 5.018×10^{-5} for the backfill material and 1.211 mrem/y with an increased cancer risk of 1.870×10^{-5} for the trench unit.

These results are summarized in Table 6-2. Based on these results, no further dose modeling is determined to be reasonable or prudent. The RESRAD reports can be found in Attachments 7 and 8.

TABLE 6-2

DOSE AND RISK MODELING SUMMARY

Dose and Risk Modeling Summary - Trench Unit 173										
Survey Unit	Modeling Parameter	Survey Area	Average Activity (pCi/g)			Net Activity (pCi/g)			Dose (mrem/y)	Cancer Risk
			^{137}Cs	^{90}Sr	^{226}Ra	^{137}Cs	^{90}Sr	^{226}Ra		
Backfill	Activity ≥ MDA	555 cy	0.042	0.097	0.919	0.042	0.097	0.198	3.074	5.018E-05
Trench Unit	Activity ≥ MDA	694 m^2	0.031	0.131	0.778	0.031	0.131	0.057	1.211	1.870E-05

Abbreviations and Acronyms:
^{137}Cs – cesium-137
cy – cubic yard
m^2 – square meter
MDA – minimum detectable activity
mrem/y – millirems per year
pCi/g – picocuries per gram
^{226}Ra – radium-226
^{90}Sr – strontium-90

ED_006787_00017608-01289

7.0 RECOMMENDATION OF FINAL UNRESTRICTED RELEASE

7.1 DERIVED CONCENTRATION GUIDELINES

The radionuclide-specific release criteria, referred to as derived concentration guideline levels (DCGLs), used for the FSS are equivalent to the ROC release criteria established in the final Base-wide Radiological Removal Action, Action Memorandum – Revision 2006 (AM) (DON 2006). The DCGLs are presented in terms of mass activity concentrations and refer to average levels of radiation or radioactivity above background levels.

7.2 DCGL MODELING

DCGLs were obtained from the AM and were then modeled using RESRAD Version 6.3, based on the 25 mrem/y total effective dose equivalent or were otherwise risk based; the final doses are all less than the 25 mrem/y release criterion for HPS. The model for the critical group was based on default RESRAD Version 6.5 parameters. This model shows that with all the DCGLs combined (the ROCs), the dose to the average member of the critical group for this trench unit would be 14.89 mrem/y.

7.3 AS LOW AS REASONABLY ACHIEVABLE

As low as reasonably achievable (ALARA) is a philosophy of striving for excellence in the practice of health physics and is an important aspect of radiation-safety regulations. The National Council on Radiation Protection and Measurements has stated "ALARA is simply the continuation of good radiation-protection programs and practices which traditionally have been effective in keeping the average and individual exposures for monitored workers well below the limits" (NCRP 1993). The application of ALARA clearly includes the consideration of economic and social factors, and thus will inherently be different for different sources or facilities.

The ALARA concept is founded on the professional judgment of radiation-safety managers and personnel and is not, therefore, able to be used as a measure as to whether or not a particular radiation-safety program is adequate in comparison with other programs. Additionally, the ALARA concept does not provide a numerical limit below which the ALARA concept is achieved.

7.4 ENVIRONMENTAL ALARA PROCESS

This section describes the steps taken to implement the environmental ALARA policy:

- Identification of Potential Radiological Impacts
- Review of Radiological Impacts

- Performance of Qualitative ALARA Analyses
- Performance of Quantitative ALARA Analyses

7.4.1 Identification of Potential Radiological Impacts

Each new radiological operation was subjected to ALARA reviews before work began to ensure that radiation exposures to workers, the public, and the environment met ALARA principles. ALARA reviews were conducted for all operations, practices, and procedures that have potential for individual or collective doses to workers. Reviews culminated in changes or additions to work planning documents, standard operating procedures, and radiological work permits.

These documents were used to identify activities that have potential for radiological environmental impacts and could require environmental ALARA analysis. If a radiological impact was identified that could impact the environment significantly, the Radiation Safety Officer communicated the impact to the work staff and the Radiological Affairs Support Office (RASO).

7.4.2 Review of Radiological Impacts

Radiological impacts to the environment, workers, and the public from field operations were assessed for compliance with ALARA principles. Results from radiological survey activities, and air, soil, sediment, and water samples were used to assess the radiological impacts of HPS activities.

Environmental radiological impacts from radiological activities were determined using nine methods: 1) air monitoring stations located around the excavation site perimeter to track radiological impacts; several air-sampling devices monitor radionuclides in the ambient air, and the results of this monitoring are provided to the RASO on a monthly basis; 2) field monitoring and sampling to identify areas requiring additional remediation; 3) remediation of contaminated areas at or above the release criteria; 4) control of radiologically impacted areas and work sites; 5) frisking of personnel and examining equipment leaving a radiologically controlled area; 6) use of release criteria that equate to dose and risk; 7) review of historical radiological operations to allow complete investigation of all areas of radiological concern; 8) characterization of radiologically impacted sites to ensure complete removal of radioactive material above the release criteria; and 9) dosimetry worn by personnel to measure time-averaged doses from gamma radiation.

7.4.3 Performance of Qualitative ALARA Analyses

Laboratory analyses were performed for 19 different isotopes to ensure that any possible radioactive contamination has been identified. After each excavation was completed, the qualitative radiological impacts from operations were evaluated by performing a dose and risk

ED_006787_00017608-01291

assessment. The results of analysis and assessments are provided to the RASO and regulatory agencies for review.

7.4.4 Performance of Quantitative ALARA Analyses

Based on qualitative ALARA analyses, excavation projects that could cause the potential dose to the public to exceed 1 millirem (individual) or 10 person-rem (collective) are subjected to quantitative ALARA analyses using the steps described below. To date, no operations at HPS have resulted in an individual dose to the public greater than 1 millirem or a collective dose greater than 10 person-rem.

Quantitative ALARA analyses include societal, technological, economic, and public policy considerations. In addition, these ALARA analyses consider Nuclear Regulatory Commission guidance for performing the following environmental ALARA assessments:

- Identification of possible radiation protection systems, such as alternative operating methods or controls, that are reasonably achievable. The options range from the most rudimentary (base case) to the most technologically sophisticated systems.
- Quantification of exposures and doses to workers and the public in the vicinity of the work through air monitoring and dosimetry.
- Quantification of the economic factors, including the costs of purchasing, installing, operating, and maintaining the radiological equipment, and the potential health effects associated with the exposure of people and any other direct or indirect cost resulting from exposures to radiation during investigations and/or remediations.
- Identification and estimation of other health and non-health detriments and benefits, such as equipment loss and accidents.
- Evaluation of process alternatives using a quantitative cost-benefit analysis, when possible. When evaluations included assumptions, judgments, and limitations that could be quantified, and potential doses were well below the dose limit, qualitative analyses were used with full documentation.
- Implementation of the ALARA principles and monitoring of the results.

The following specific factors were used in performing a quantitative ALARA analysis:

- Dose to workers, the public, and the environment before and during work processes
- Residual dose to the local population
- Applicable alternative processes (treatments, operating methods, or controls) for site investigations or remediations
- Costs for each alternative evaluated
- Societal and environmental (positive and negative) impacts associated with alternatives

7.5 ALARA ANALYSIS RESULTS

Based on recent estimates of dose to the public from HPS operations, only qualitative ALARA analyses were required. Much of the data and analyses used for environmental ALARA evaluations were developed as part of the routine work processes.

Qualitative ALARA analyses resulted in no gamma measurements above the investigation levels; none of the sample results identified activity above the release criteria for any ROC; no air sampling results were above 10 percent of the derived air concentration; and no personnel dosimetry badges processed identified gamma doses above background levels.

7.6 RECOMMENDATIONS

Dose modeling using RESRAD determined that the potential dose of Survey Unit 173 due to activity concentrations greater than or equal to the MDL or the MDA has been determined to be 3.074 mrem/y with an increased cancer risk of 5.018×10^{-5} as shown in Table 6-2. These results are less than the EPA criteria of 15 mrem/y with an increased cancer risk of less than 3×10^{-4}, which supports free release. Therefore, no further action is recommended for Survey Unit 173.

8.0 REFERENCES

DON (Department of the Navy). 2006. Final Base-wide Radiological Removal Action, Action Memorandum – Revision 2006, Hunters Point Shipyard, San Francisco, California.

NCRP (National Council on Radiation Protection and Measurements). 1993. The National Council on Radiation Protection and Measurements, Report Number 116.

TtEC (Tetra Tech EC, Inc.). 2010a. Final Project Work Plan, Revision 4. Base-wide Storm Drain and Sanitary Sewer Removal, Hunters Point Shipyard, San Francisco, California. July 30.

——————. 2010b. Final Survey Unit Project Reports Abstract, Revision 2. January 27.

This page intentionally left blank.

FIGURES

This page intentionally left blank.

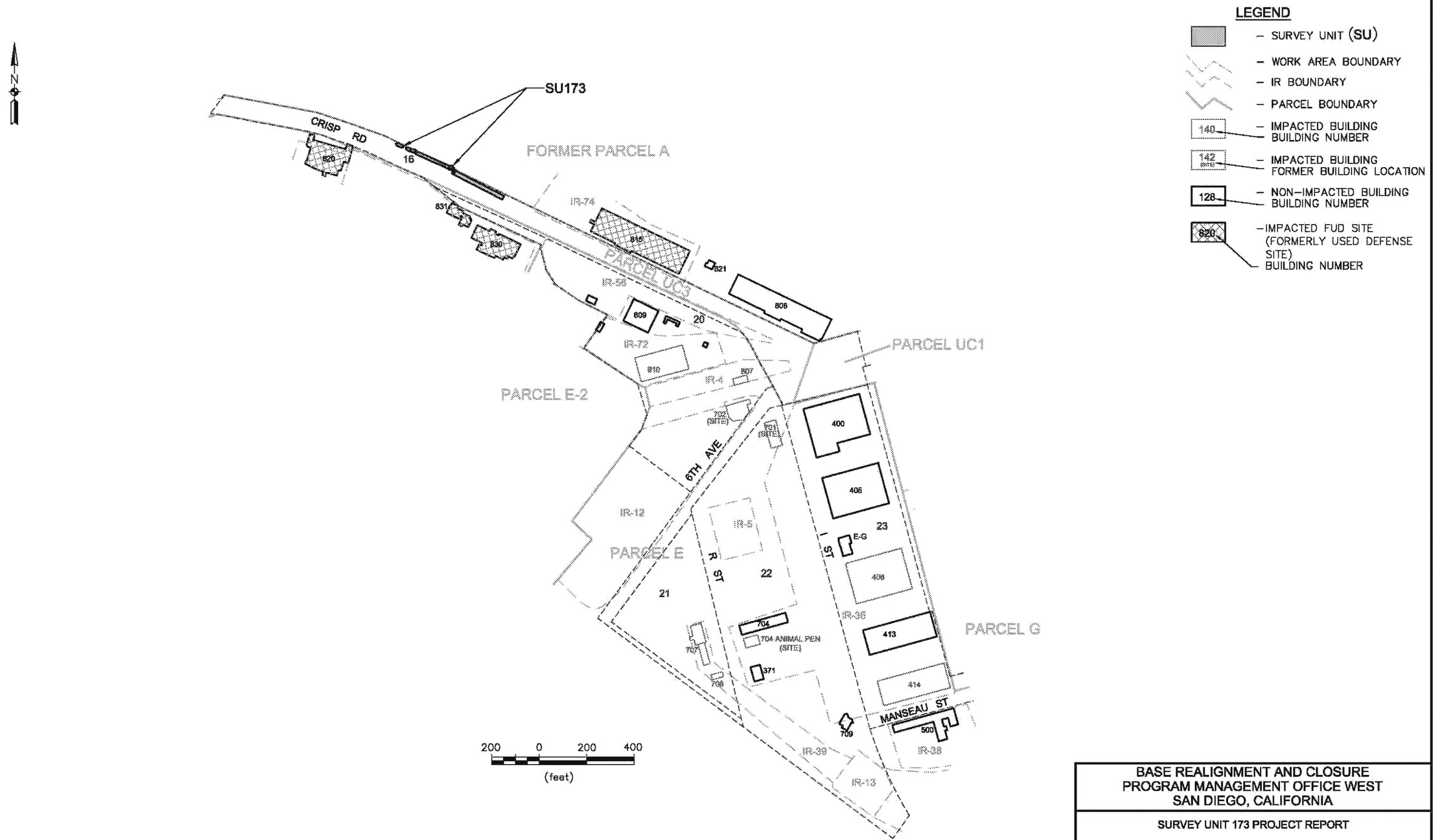

BASE REALIGNMENT AND CLOSURE
PROGRAM MANAGEMENT OFFICE WEST
SAN DIEGO, CALIFORNIA

SURVEY UNIT 173 PROJECT REPORT

FIGURE 1-1

PARCEL UC3 SURVEY UNIT KEY PLAN

HUNTERS POINT SHIPYARD, SAN FRANCISCO, CA

REVISION: A
AUTHOR: K. TODD
PROJECT NO: 106–3670
FILE: SEE BELOW

TETRA TECH EC, INC.

J:\CAD Dept\HUNTERS POINT\CTO 03-FIGURES\Figure 1-1 and 3-1\Final\Package 39\SU173_FIGURE 1-1_03-28-11.dwg

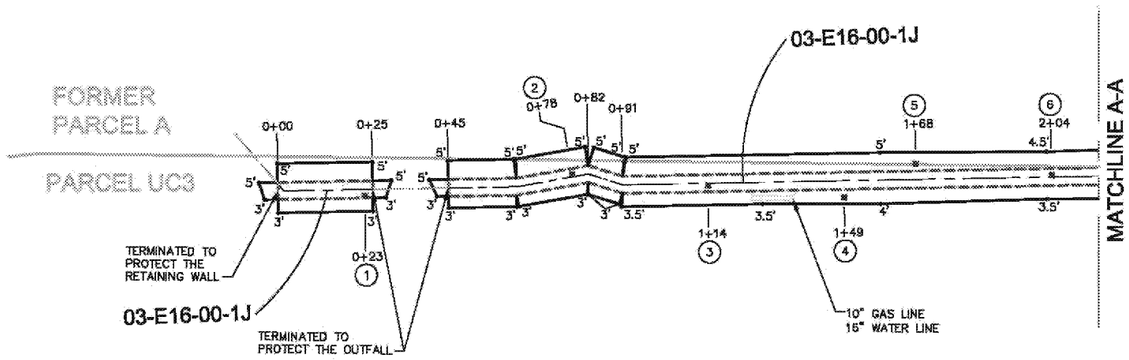

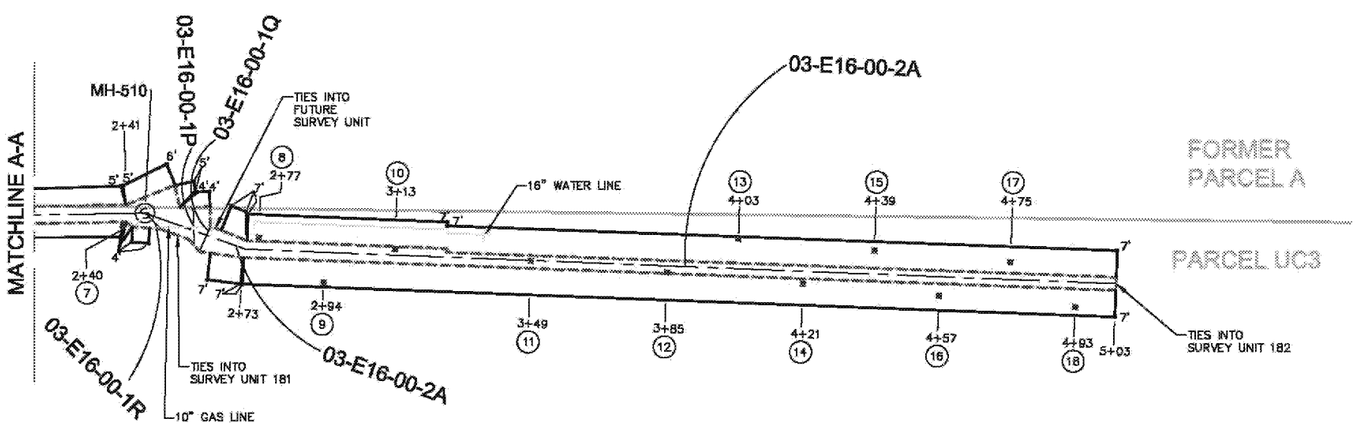

20 0 20 40
(feet)

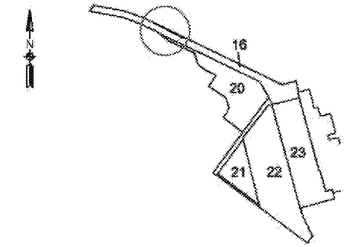

KEY PLAN

LEGEND

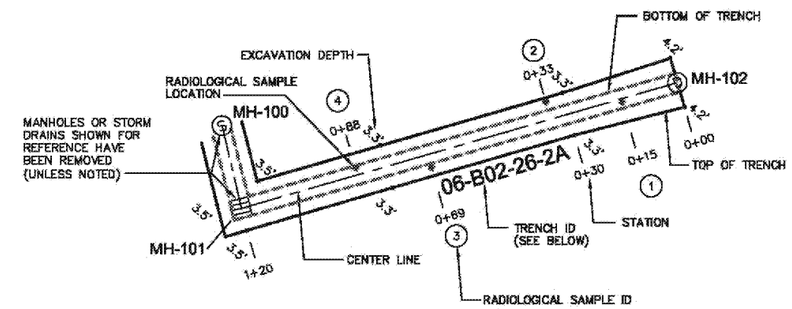

TRENCH ID

XX-XXX-XX-XX

- SEGMENT NO.
- IR SITE ID, 00 IF NON-IR SITE
- WORK/BLDG AREA
- CTO OR TO NUMBER

IR BOUNDARY
PARCEL BOUNDARY
WORK AREA BOUNDARY
EP EXTRANEOUS PIPE
140 BUILDING
CONCRETE
ROCK

SURVEY UNIT AREA = 694 SQUARE METERS
TOTAL LENGTH OF TRENCH = 485 LINEAR FEET

BASE REALIGNMENT AND CLOSURE
PROGRAM MANAGEMENT OFFICE WEST
SAN DIEGO, CALIFORNIA

SURVEY UNIT 173 PROJECT REPORT

FIGURE 3-1

PARCEL UC3 SURVEY UNIT 173, AREA 16

HUNTERS POINT SHIPYARD, SAN FRANCISCO, CA

REVISION: A
AUTHOR: K. TODD
PROJECT NO: 106-3670
FILE: SEE BELOW

TETRA TECH EC, INC.

J:\CAD Dept\HUNTERS POINT\CTO 03-FIGURES\Figure 1-1 and 3-1\Final\Package 39\SU173_FIGURE 3-1_03-28-11.dwg 3/28/11

ATTACHMENT 1

TRENCH UNIT 173
RADIATION/CONTAMINATION SURVEY FORM
(on CD only)

This page intentionally left blank.

RADIATION/CONTAMINATION SURVEY SUPPLEMENT

Date: 8/13/2010	Time: 13:45	INSTRUMENTATION USED						
		Model Inst/Det.	Serial Number	Calibration Due Date	Instrument % Efficiency	Total % Efficiency	MDC/MDA + (dpm/100cm2)	Background + (dpm/100cm2)
Survey Number: HPS-SU-173								
Location: Parcel E								
Surveyor: A. Smith								
Reviewed By: (Print & Sign)		2350-1 44-10	98638 157352	3/5/2011				

Isotopes of Concern: ^{226}Ra ^{90}Sr ^{137}Cs

Description of drawing: Trench Scan Survey

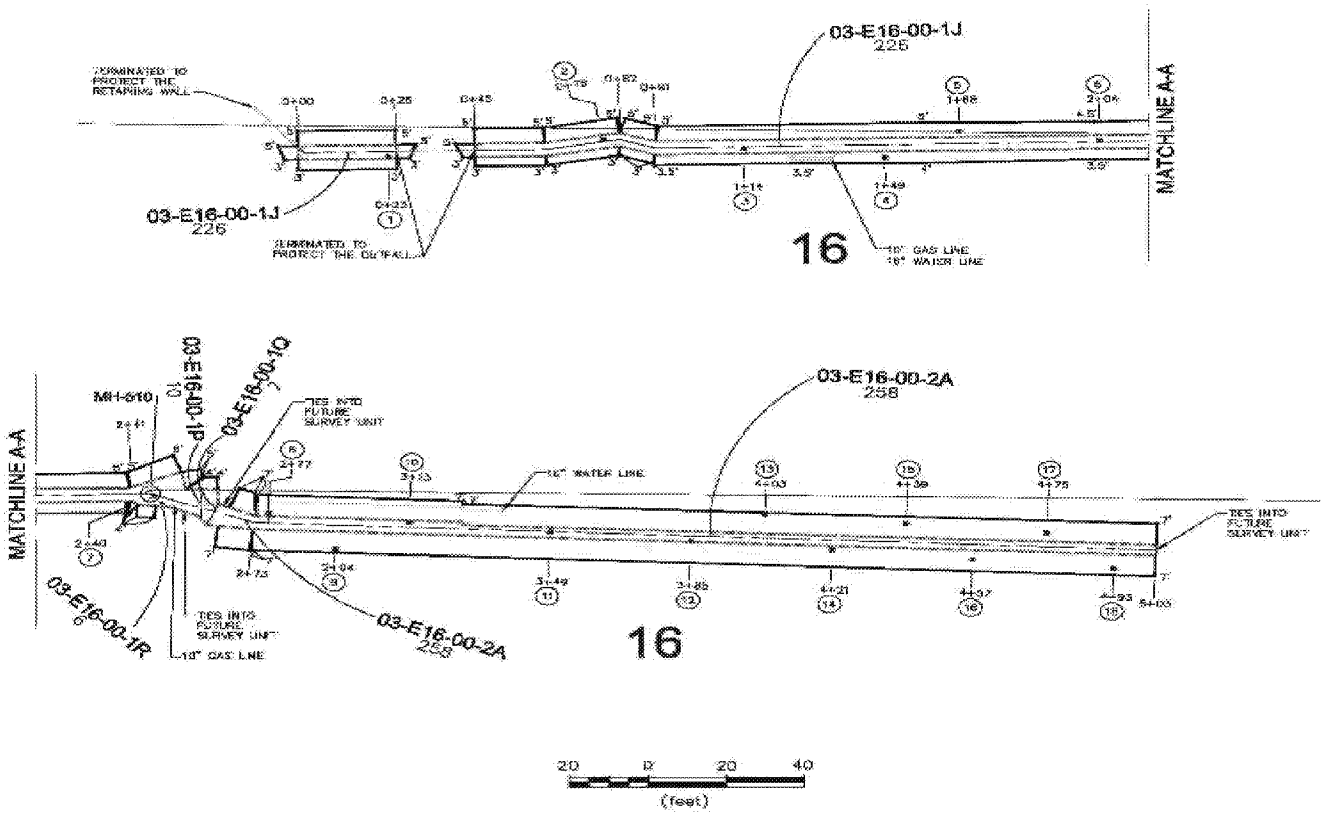

Comments:

Scan range for 2350-1 Instrument is 5.48 - 7.29 Kcpm

3 sigma investigation level for 2350-1 Instrument is 7401 cpm

Picture is representative of material surveyed.

denotes swipe location or fixed α/β readings

# denotes G/A radiation readings

#/# denotes contact / 1 meter radiation readings.

* denotes highest radiation reading on contact

LAW denotes large area masslinn wipe

Δ denotes static location.

\+ Unless Otherwise Noted

All readings in μR/hr unless otherwise noted

K = 1000

RADIATION/CONTAMINATION SURVEY SUPPLEMENT

SURVEY NUMBER: HPS-SU-173								
SURVEYOR: A. Smith					LOCATION: Parcel E			
Location	Exposure Rate (µR/hr)		Fixed + Removable (NET)			Removable (NET)		Comments
	Contact	1 Meter	Gamma (cpm)	Alpha dpm/100cm2	Beta/Gamma dpm/100cm2	Alpha dpm/100cm2	Beta/Gamma dpm/100cm2	
1			4092					
2			4083					
3			4181					
4			4155					
5			4191					
6			3298					
7			4299					
8			4078					
9			4275					
10			4016					
11			4139					
12			4026					
13			4011					
14			4109					
15			4063					
16			4110					
17			4138					
18			4024					
Reviewer:							Date:	

ATTACHMENT 2

LABORATORY ANALYSIS REPORTS FOR TRENCH UNIT 173 (on CD only)

This page intentionally left blank.

ORTEC g v - i (3263) Npp32 G53W3.10 13-AUG-2010 16:08:46
New World Technology Spectrum name: 4N000415.An1

Sample description
Parcel E 03-PET-173-01 362g
8/13/10 09:30

Acquisition information
Start time: 13-Aug-2010 15:14:55
Live time: 2700
Real time: 2703

- -

***** S U M M A R Y O F N U C L I D E S I N S A M P L E *****

Nuclide		Time of Count Activity pCi/g	Uncertainty Counting pCi/g	2 Sigma Total pCi/g	MDA pCi/g
Ac-228		5.8508E-01	1.8037E-01	1.8485E-01	0.918E-01
AM-241	#	5.6685E-01	7.8797E-01	7.8958E-01	0.538E+00
Bi-212		3.8417E-01	3.8894E-01	3.8981E-01	0.275E+00
BI-214		6.4643E-01	1.9254E-01	1.9728E-01	0.795E-01
CO-60	#A	3.2938E-02	4.7852E-02	4.7904E-02	0.362E-01
CS-137	#A	-1.7456E-03	6.7453E-02	6.7453E-02	0.446E-01
EU-152	C	1.6082E-01	8.8127E-02	8.9176E-02	0.157E+00
EU-154	C	1.2983E-01	9.6863E-02	9.7486E-02	0.865E-01
K-40		1.2587E+01	1.5494E+00	1.7798E+00	0.111E+00
Pa-234	A	1.1977E-01	1.2261E-01	1.2306E-01	0.125E+00
Pb-210	#	0.0000E+00	0.0000E+00	0.0000E+00	0.000E+00
Pb-212		4.8389E-01	1.3792E-01	1.4276E-01	0.862E-01
Pb-214		6.2569E-01	2.0365E-01	2.0855E-01	0.963E-01
RA-226	A	9.2583E-02	1.1665E+00	1.1665E+00	0.975E+00
Th-230	#A	-9.3708E+00	6.7602E+01	6.7620E+01	0.280E+02
Th-234	#A	-3.7731E+00	1.3149E+01	1.3153E+01	0.208E+01
Tl-208		2.9438E-01	9.6791E-02	1.1039E-01	0.185E-01
U-235	A	6.6730E-02	4.3683E-02	4.3973E-02	0.729E-01

- All peaks for activity calculation had bad shape.
* - Activity omitted from total
& - Activity omitted from total and all peaks had bad shape.
< - MDA value printed.
A - Activity printed, but activity < MDA.
B - Activity < MDA and failed test.
C - Area < Critical level.
F - Failed fraction or key line test.
H - Halflife limit exceeded

---------- S U M M A R Y ----------

Total Activity (50.9 to 3247.4 keV) 1.522E+01 pCi/g

Laboratory: New World Technology

ORTEC g v - i (3263) Npp32 G53W3.10 13-AUG-2010 16:20:09
New World Technology Spectrum name: 5N000461.An1

Sample description
Parcel E 03-PET-173-02 353g
8/13/10 09:35

Acquisition information
Start time: 13-Aug-2010 15:16:45
Live time: 2700
Real time: 2702

- -

***** S U M M A R Y O F N U C L I D E S I N S A M P L E *****

Nuclide		Time of Count Activity pCi/g	Uncertainty Counting pCi/g	2 Sigma Total pCi/g	MDA pCi/g
Ac-228		4.1621E-01	2.4553E-01	2.4721E-01	0.137E+00
AM-241		9.7539E-02	1.0782E-01	1.0817E-01	0.734E-01
Bi-212		5.6011E-01	4.1038E-01	4.1215E-01	0.309E+00
BI-214		6.0573E-01	1.5168E-01	1.5694E-01	0.582E-01
CO-60	#A	-8.5494E-03	7.0156E-02	7.0159E-02	0.167E-01
CS-137	#A	-1.2574E-02	1.4303E-01	1.4303E-01	0.243E-01
EU-152	A	6.0087E-03	1.0344E-02	1.0356E-02	0.869E-01
EU-154	C	7.1610E-02	6.5181E-02	6.5463E-02	0.463E-01
K-40		7.3218E+00	1.3799E+00	1.4709E+00	0.902E+00
Pa-234		1.1413E-01	1.0741E-01	1.0787E-01	0.986E-01
Pb-210	#	8.8063E-01	9.5875E-01	9.6124E-01	0.668E+00
Pb-212		4.5492E-01	1.0463E-01	1.1021E-01	0.708E-01
Pb-214		3.6874E-01	1.0628E-01	1.0954E-01	0.645E-01
RA-226	A	4.3347E-01	1.0635E+00	1.0640E+00	0.870E+00
Th-230	#A	4.4337E+00	8.2774E+00	8.3115E+00	0.594E+01
Th-234	A	2.0482E-01	1.4686E+00	1.4687E+00	0.114E+01
Tl-208		3.1037E-01	9.6944E-02	1.1194E-01	0.176E-01
U-235		5.5069E-02	6.7156E-02	6.7285E-02	0.551E-01

- All peaks for activity calculation had bad shape.
* - Activity omitted from total
& - Activity omitted from total and all peaks had bad shape.
< - MDA value printed.
A - Activity printed, but activity < MDA.
B - Activity < MDA and failed test.
C - Area < Critical level.
F - Failed fraction or key line test.
H - Halflife limit exceeded

---------- S U M M A R Y ----------

Total Activity (37.9 to 3020.7 keV) 1.004E+01 pCi/g

Laboratory: New World Technology

ORTEC g v - i (3263) Npp32 G53W3.10 13-AUG-2010 16:20:38
New World Technology Spectrum name: 6N000531.An1

Sample description
Parcel E 03-PET-173-03 355g
8/13/10 09:40

Acquisition information
Start time: 13-Aug-2010 15:14:56
Live time: 2700
Real time: 2705

- -

***** S U M M A R Y O F N U C L I D E S I N S A M P L E *****

Nuclide		Time of Count Activity pCi/g	Uncertainty Counting pCi/g	2 Sigma Total pCi/g	MDA pCi/g
Ac-228		8.2407E-01	1.9238E-01	2.0063E-01	0.182E+00
AM-241	#A	8.5441E-03	3.6265E-02	3.6273E-02	0.363E-01
Bi-212		7.5108E-01	3.9698E-01	4.0026E-01	0.314E+00
BI-214		6.7150E-01	1.5212E-01	1.5854E-01	0.601E-01
CO-60	#A	1.0744E-02	2.8487E-02	2.8496E-02	0.213E-01
CS-137	#A	-2.2966E-03	4.8960E-02	4.8961E-02	0.316E-01
EU-152	#A	-1.0910E-01	5.2363E-01	5.2371E-01	0.103E+00
EU-154	A	4.2740E-02	3.2152E-02	3.2355E-02	0.723E-01
K-40		9.6561E+00	1.5020E+00	1.6454E+00	0.836E+00
Pa-234	#C	1.4319E-01	8.7521E-02	8.8415E-02	0.938E-01
Pb-210	#	9.2668E-01	1.1167E+00	1.1190E+00	0.745E+00
Pb-212		8.5940E-01	1.2047E-01	1.3709E-01	0.685E-01
PB-214		7.2231E-01	1.8439E-01	1.9156E-01	0.838E-01
RA-226		8.7297E-01	1.0614E+00	1.0635E+00	0.853E+00
Th-230	A	3.2347E+00	8.7975E+00	8.8146E+00	0.714E+01
Th-234		1.8292E+00	1.7434E+00	1.7520E+00	0.117E+01
Tl-208		2.8420E-01	8.1729E-02	9.6470E-02	0.630E-01
U-235	C	7.1683E-02	8.1743E-02	8.1922E-02	0.613E-01

- All peaks for activity calculation had bad shape.
* - Activity omitted from total
& - Activity omitted from total and all peaks had bad shape.
< - MDA value printed.
A - Activity printed, but activity < MDA.
B - Activity < MDA and failed test.
C - Area < Critical level.
F - Failed fraction or key line test.
H - Halflife limit exceeded

---------- S U M M A R Y ----------

Total Activity (33.3 to 2659.2 keV) 1.560E+01 pCi/g

Laboratory: New World Technology

ORTEC g v - i (3263) Npp32 G53W3.10 13-AUG-2010 16:24:17
New World Technology Spectrum name: 7N000506.An1

Sample description
Parcel E 03-PET-173-04 359g
8/13/10 09:45

Acquisition information
Start time: 13-Aug-2010 15:16:10
Live time: 2700
Real time: 2703

- -

***** S U M M A R Y O F N U C L I D E S I N S A M P L E *****

Nuclide		Time of Count Activity pCi/g	Uncertainty 2 Sigma Counting pCi/g	Total pCi/g	MDA pCi/g
Ac-228		4.1910E-01	2.4682E-01	2.4852E-01	0.146E+00
AM-241	#A	7.1609E-02	1.0984E-01	1.1003E-01	0.787E-01
Bi-212	A	1.5862E-02	3.2600E-02	3.2618E-02	0.295E+00
BI-214		3.1680E-01	1.1427E-01	1.1619E-01	0.531E-01
CO-60	#A	6.1859E-03	1.9033E-02	1.9038E-02	0.182E-01
CS-137	#A	-2.8307E-03	4.4074E-02	4.4074E-02	0.246E-01
EU-152	A	-1.7438E-01	5.1433E-01	5.1455E-01	0.127E+00
EU-154	C	1.0871E-01	6.5681E-02	6.6323E-02	0.632E-01
K-40	A	1.0220E+00	1.1102E+00	1.1125E+00	0.112E+01
Pa-234	C	1.2465E-01	1.1365E-01	1.1417E-01	0.915E-01
Pb-210	A	3.2132E-01	7.3698E-01	7.3742E-01	0.619E+00
Pb-212		1.5399E-01	9.3264E-02	9.3998E-02	0.733E-01
PB-214		2.2760E-01	1.2806E-01	1.2910E-01	0.861E-01
RA-226	A	4.5011E-01	1.0949E+00	1.0954E+00	0.897E+00
Th-230	#A	-6.4624E+00	3.4961E+01	3.4978E+01	0.742E+01
Th-234	#A	-5.0237E-01	1.8470E+00	1.8476E+00	0.118E+01
Tl-208		8.6393E-02	5.2154E-02	5.4432E-02	0.774E-01
U-235	C	1.1377E-01	1.0297E-01	1.0332E-01	0.605E-01

- All peaks for activity calculation had bad shape.
* - Activity omitted from total
& - Activity omitted from total and all peaks had bad shape.
< - MDA value printed.
A - Activity printed, but activity < MDA.
B - Activity < MDA and failed test.
C - Area < Critical level.
F - Failed fraction or key line test.
H - Halflife limit exceeded

---------- S U M M A R Y ----------

Total Activity (42.2 to 3353.9 keV) 1.204E+00 pCi/g

Laboratory: New World Technology

ORTEC g v - i (3263) Npp32 G53W3.10 13-AUG-2010 16:38:59
New World Technology Spectrum name: 1N000985.An1

Sample description
Parcel E 03-PET-173-05 351g
8/13/10 09:50

Acquisition information
Start time: 13-Aug-2010 15:50:33
Live time: 2700
Real time: 2701

- -

***** S U M M A R Y O F N U C L I D E S I N S A M P L E *****

Nuclide		Time of Count Activity pCi/g	Uncertainty Counting pCi/g	2 Sigma Total pCi/g	MDA pCi/g
Ac-228		4.7064E-01	1.8036E-01	1.8327E-01	0.733E-01
AM-241	#A	5.0893E-02	7.8985E-02	7.9114E-02	0.551E-01
Bi-212	#	4.0382E-01	3.3528E-01	3.3640E-01	0.160E+00
BI-214		4.3916E-01	1.6185E-01	1.6447E-01	0.639E-01
CO-60	#A	-3.8446E-02	1.7423E+00	1.7423E+00	0.308E-01
CS-137	A	2.1410E-02	3.0377E-02	3.0411E-02	0.227E-01
EU-152	A	-2.3334E-01	1.0191E+00	1.0193E+00	0.793E-01
EU-154	C	5.0321E-02	4.3100E-02	4.3310E-02	0.337E-01
K-40		4.2186E+00	9.9446E-01	1.0369E+00	0.407E+00
Pa-234	#C	9.6858E-02	8.5468E-02	8.5888E-02	0.401E-01
Pb-210		1.2477E+00	8.5521E-01	8.6083E-01	0.562E+00
Pb-212		4.8434E-01	9.1764E-02	9.8897E-02	0.499E-01
Pb-214		5.2288E-01	1.1759E-01	1.2344E-01	0.570E-01
RA-226	A	3.5759E-01	9.1012E-01	9.1053E-01	0.747E+00
Th-230	#A	1.0104E+00	4.2940E+00	4.2974E+00	0.359E+01
Th-234	A	5.5900E-01	1.1096E+00	1.1109E+00	0.104E+01
Tl-208		9.9695E-02	4.1298E-02	4.5041E-02	0.173E-01
U-235	C	5.2590E-02	6.3303E-02	6.3428E-02	0.510E-01

- All peaks for activity calculation had bad shape.
* - Activity omitted from total
& - Activity omitted from total and all peaks had bad shape.
< - MDA value printed.
A - Activity printed, but activity < MDA.
B - Activity < MDA and failed test.
C - Area < Critical level.
F - Failed fraction or key line test.
H - Halflife limit exceeded

---------- S U M M A R Y ----------

Total Activity (36.6 to 2885.2 keV) 7.887E+00 pCi/g

Laboratory: New World Technology

ORTEC g v - i (3263) Npp32 G53W3.10 13-AUG-2010 16:43:21
New World Technology Spectrum name: 2N000591.An1

Sample description
Parcel E 03-PET-173-06 386g
8/13/10 09:55

Acquisition information
Start time: 13-Aug-2010 15:53:53
Live time: 2700
Real time: 2704

- -

***** S U M M A R Y O F N U C L I D E S I N S A M P L E *****

Nuclide		Time of Count Activity pCi/g	Uncertainty Counting pCi/g	2 Sigma Total pCi/g	MDA pCi/g
Ac-228		4.3020E-01	2.8519E-01	2.8673E-01	0.155E+00
AM-241	#A	-3.3768E-02	4.9663E-01	4.9664E-01	0.272E+00
Bi-212		3.9889E-01	2.9867E-01	2.9990E-01	0.205E+00
BI-214		3.8420E-01	1.1619E-01	1.1897E-01	0.522E-01
CO-60	#A	-1.5574E-03	3.2739E-02	3.2739E-02	0.307E-01
CS-137		3.4896E-02	4.0202E-02	4.0270E-02	0.298E-01
EU-152	A	-5.2605E-02	3.5611E-02	3.5890E-02	0.143E+00
EU-154	A	6.8600E-02	7.0172E-02	7.0412E-02	0.746E-01
K-40		9.1925E+00	1.4690E+00	1.6022E+00	0.976E+00
Pa-234	C	1.2097E-01	1.2600E-01	1.2645E-01	0.855E-01
Pb-210	#C	0.0000E+00	4.4365E+00	4.4365E+00	0.000E+00
Pb-212		1.9744E-01	1.1996E-01	1.2090E-01	0.774E-01
PB-214		2.3106E-01	1.2094E-01	1.2208E-01	0.796E-01
RA-226		8.5223E-01	9.6061E-01	9.6277E-01	0.768E+00
Th-230	#A	-3.4988E-01	2.1784E+01	2.1784E+01	0.157E+02
Th-234	A	2.5934E-01	1.6125E+00	1.6127E+00	0.137E+01
Tl-208		6.9930E-02	5.4165E-02	5.4363E-02	0.330E-01
U-235	A	2.8343E-02	5.8359E-02	5.8399E-02	0.583E-01

- All peaks for activity calculation had bad shape.
* - Activity omitted from total
& - Activity omitted from total and all peaks had bad shape.
< - MDA value printed.
A - Activity printed, but activity < MDA.
B - Activity < MDA and failed test.
C - Area < Critical level.
F - Failed fraction or key line test.
H - Halflife limit exceeded

---------- S U M M A R Y ----------

Total Activity (32.4 to 2597.5 keV) 1.090E+01 pCi/g

Laboratory: New World Technology

ORTEC g v - i (3263) Npp32 G53W3.10 13-AUG-2010 16:51:44
New World Technology Spectrum name: 3N000674.An1

Sample description
Parcel E 03-PET-173-07 339g
8/13/10 10:00

Acquisition information
Start time: 13-Aug-2010 15:58:42
Live time: 2700
Real time: 2702

- -

***** S U M M A R Y O F N U C L I D E S I N S A M P L E *****

Nuclide		Time of Count Activity pCi/g	Uncertainty 2 Sigma Counting pCi/g	Total pCi/g	MDA pCi/g
Ac-228		9.6273E-01	2.1392E-01	2.2403E-01	0.123E+00
AM-241	A	4.8655E-02	1.2798E-01	1.2806E-01	0.104E+00
Bi-212		7.6733E-01	4.2843E-01	4.3160E-01	0.263E+00
BI-214	#	5.7139E-01	1.7749E-01	1.8152E-01	0.840E-01
CO-60	#A	-3.8561E-02	2.3273E-01	2.3274E-01	0.391E-01
CS-137	#A	-3.8595E-03	5.2223E-02	5.2223E-02	0.215E-01
EU-152	A	-2.2766E-02	1.6187E-02	1.6302E-02	0.137E+00
EU-154	C	1.3632E-01	8.7488E-02	8.8247E-02	0.844E-01
K-40		1.2223E+01	1.5094E+00	1.7325E+00	0.269E+00
Pa-234	#	2.0653E-01	1.4147E-01	1.4262E-01	0.121E+00
Pb-210	#A	2.0267E-02	8.4406E-01	8.4406E-01	0.706E+00
Pb-212		7.1858E-01	1.3394E-01	1.4468E-01	0.847E-01
PB-214		6.4612E-01	1.8400E-01	1.8977E-01	0.870E-01
RA-226	A	1.2741E-01	1.3458E+00	1.3459E+00	0.115E+01
Th-230	#A	-1.3910E+01	2.1737E+02	2.1738E+02	0.522E+01
Th-234	A	3.2213E-01	1.6106E+00	1.6109E+00	0.147E+01
Tl-208		3.7900E-01	1.1895E-01	1.3719E-01	0.560E-01
U-235	C	8.9921E-02	9.9317E-02	9.9550E-02	0.751E-01

- All peaks for activity calculation had bad shape.
* - Activity omitted from total
& - Activity omitted from total and all peaks had bad shape.
< - MDA value printed.
A - Activity printed, but activity < MDA.
B - Activity < MDA and failed test.
C - Area < Critical level.
F - Failed fraction or key line test.
H - Halflife limit exceeded

---------- S U M M A R Y ----------

Total Activity (34.9 to 2779.2 keV) 1.627E+01 pCi/g

Laboratory: New World Technology

ORTEC g v - i (3263) Npp32 G53W3.10 13-AUG-2010 19:19:49
New World Technology Spectrum name: 4N000416.An1

Sample description
Parcel E 03-PET-173-08 335g
8/13/10 10:05

Acquisition information
Start time: 13-Aug-2010 17:06:19
Live time: 5400
Real time: 5405

- -

***** S U M M A R Y O F N U C L I D E S I N S A M P L E *****

Nuclide		Time of Count Activity pCi/g	Uncertainty 2 Sigma Counting pCi/g	Total pCi/g	MDA pCi/g
Ac-228		5.6809E-01	1.7764E-01	1.8193E-01	0.106E+00
AM-241	A	2.8085E-01	5.4337E-01	5.4395E-01	0.439E+00
Bi-212		1.0097E+00	4.1156E-01	4.1726E-01	0.177E+00
BI-214		4.6154E-01	1.1955E-01	1.2343E-01	0.587E-01
CO-60	#A	-5.7895E-04	5.6319E-04	5.6455E-04	0.278E-01
CS-137	A	1.3721E-02	3.6500E-02	3.6512E-02	0.302E-01
EU-152	A	-1.3308E-01	1.3193E-01	1.3241E-01	0.118E+00
EU-154	C	7.9891E-02	1.0059E-01	1.0081E-01	0.644E-01
K-40		1.1252E+01	1.1633E+00	1.4022E+00	0.234E+00
Pa-234	A	7.7067E-02	1.1146E-01	1.1167E-01	0.111E+00
Pb-210	#	0.0000E+00	0.0000E+00	0.0000E+00	0.000E+00
Pb-212		4.5035E-01	9.0289E-02	9.6581E-02	0.622E-01
Pb-214		5.7947E-01	1.3159E-01	1.3801E-01	0.635E-01
RA-226		9.5202E-01	8.8386E-01	8.8678E-01	0.709E+00
Th-230	#A	-1.6122E+01	8.8192E+01	8.8234E+01	0.200E+02
Th-234	#A	-3.7079E+00	7.1475E+00	7.1562E+00	0.150E+01
Tl-208		2.5792E-01	6.6595E-02	8.1231E-02	0.100E-01
U-235	#A	-6.5787E-02	1.0834E-01	1.0845E-01	0.525E-01

- All peaks for activity calculation had bad shape.
* - Activity omitted from total
& - Activity omitted from total and all peaks had bad shape.
< - MDA value printed.
A - Activity printed, but activity < MDA.
B - Activity < MDA and failed test.
C - Area < Critical level.
F - Failed fraction or key line test.
H - Halflife limit exceeded

---------- S U M M A R Y ----------

Total Activity (50.9 to 3247.4 keV) 1.553E+01 pCi/g

Laboratory: New World Technology

ORTEC g v - i (3263) Npp32 G53W3.10 13-AUG-2010 17:13:14
New World Technology Spectrum name: 5N000462.An1

Sample description
Parcel E 03-PET-173-09 360g
8/13/10 10:10

Acquisition information
Start time: 13-Aug-2010 16:23:38
Live time: 2700
Real time: 2702

- -

***** S U M M A R Y O F N U C L I D E S I N S A M P L E *****

Nuclide	Time of Count Activity pCi/g	Uncertainty 2 Sigma Counting pCi/g	Total pCi/g	MDA pCi/g
Ac-228	5.4923E-01	1.8360E-01	1.8748E-01	0.110E+00
AM-241 #A	1.2701E-02	5.2519E-02	5.2531E-02	0.476E-01
Bi-212	7.9162E-01	3.7107E-01	3.7497E-01	0.202E+00
BI-214	5.4189E-01	1.7408E-01	1.7778E-01	0.751E-01
CO-60 #A	2.8914E-02	1.7709E-02	1.7817E-02	0.293E-01
CS-137 #A	-6.5218E-03	8.7783E-02	8.7784E-02	0.345E-01
EU-152 A	5.8766E-02	3.7628E-02	3.7956E-02	0.783E-01
EU-154 C	1.4342E-01	1.0515E-01	1.0585E-01	0.629E-01
K-40	9.3629E+00	1.5378E+00	1.6701E+00	0.908E+00
Pa-234 #C	1.9725E-01	1.3816E-01	1.3924E-01	0.106E+00
Pb-210 #A	5.4621E-01	7.5995E-01	7.6116E-01	0.622E+00
Pb-212	5.4958E-01	1.0874E-01	1.1652E-01	0.677E-01
Pb-214	6.3249E-01	1.7256E-01	1.7844E-01	0.812E-01
RA-226 A	6.3537E-01	1.0784E+00	1.0795E+00	0.874E+00
Th-230 #	7.4511E+00	9.5948E+00	9.6775E+00	0.658E+01
Th-234 #A	-8.4351E-01	2.0861E+00	2.0877E+00	0.107E+01
Tl-208	3.8729E-01	1.0741E-01	1.2812E-01	0.173E-01
U-235	1.0700E-01	7.5538E-02	7.5970E-02	0.515E-01

- All peaks for activity calculation had bad shape.
* - Activity omitted from total
& - Activity omitted from total and all peaks had bad shape.
< - MDA value printed.
A - Activity printed, but activity < MDA.
B - Activity < MDA and failed test.
C - Area < Critical level.
F - Failed fraction or key line test.
H - Halflife limit exceeded

---------- S U M M A R Y ----------

Total Activity (37.9 to 3020.7 keV) 1.292E+01 pCi/g

Laboratory: New World Technology

ORTEC g v - i (3263) Npp32 G53W3.10 13-AUG-2010 20:33:14
New World Technology Spectrum name: 5N000464.An1

Sample description
Parcel E 03-PET-173-09DUP 360g
8/13/10 10:10

Acquisition information
Start time: 13-Aug-2010 19:40:29
Live time: 2700
Real time: 2702

- -

***** S U M M A R Y O F N U C L I D E S I N S A M P L E *****

Nuclide		Time of Count Activity pCi/g	Uncertainty Counting pCi/g	2 Sigma Total pCi/g	MDA pCi/g
Ac-228		6.6129E-01	2.1934E-01	2.2405E-01	0.107E+00
AM-241	#A	3.3695E-03	3.5159E-02	3.5160E-02	0.345E-01
Bi-212		5.8217E-01	3.2437E-01	3.2679E-01	0.212E+00
BI-214		4.9027E-01	1.4148E-01	1.4519E-01	0.629E-01
CO-60	#A	-8.7824E-03	1.2247E-01	1.2247E-01	0.191E-01
CS-137	A	1.1166E-02	5.1937E-02	5.1943E-02	0.433E-01
EU-152	A	6.1952E-02	4.2702E-02	4.3023E-02	0.888E-01
EU-154	C	1.6752E-01	1.0220E-01	1.0318E-01	0.628E-01
K-40		8.9873E+00	1.5076E+00	1.6321E+00	0.906E+00
Pa-234		1.7697E-01	1.3742E-01	1.3830E-01	0.852E-01
Pb-210	#A	6.0060E-01	8.2281E-01	8.2416E-01	0.637E+00
Pb-212		4.2802E-01	1.1333E-01	1.1792E-01	0.792E-01
Pb-214		6.6750E-01	1.5726E-01	1.6441E-01	0.681E-01
RA-226	A	3.3324E-01	1.0419E+00	1.0422E+00	0.847E+00
Th-230	A	4.6153E-01	7.4435E+00	7.4439E+00	0.612E+01
Th-234	#A	-6.6678E-01	2.0058E+00	2.0068E+00	0.110E+01
Tl-208	C	1.2202E-01	4.0405E-02	4.6009E-02	0.300E-01
U-235		5.6564E-02	6.8810E-02	6.8943E-02	0.520E-01

- All peaks for activity calculation had bad shape.
* - Activity omitted from total
& - Activity omitted from total and all peaks had bad shape.
< - MDA value printed.
A - Activity printed, but activity < MDA.
B - Activity < MDA and failed test.
C - Area < Critical level.
F - Failed fraction or key line test.
H - Halflife limit exceeded

---------- S U M M A R Y ----------

Total Activity (37.9 to 3020.7 keV) 1.199E+01 pCi/g

Laboratory: New World Technology

ORTEC g v - i (3263) Npp32 G53W3.10 13-AUG-2010 19:17:43
New World Technology Spectrum name: 6N000532.An1

Sample description
Parcel E 03-PET-173-10 374g
8/13/10 10:15

Acquisition information
Start time: 13-Aug-2010 17:20:12
Live time: 5400
Real time: 5408

- -

***** S U M M A R Y O F N U C L I D E S I N S A M P L E *****

Nuclide		Time of Count Activity pCi/g	Uncertainty Counting pCi/g	2 Sigma Total pCi/g	MDA pCi/g
Ac-228		1.4977E-01	1.0871E-01	1.0920E-01	0.807E-01
AM-241	#A	-3.8560E-03	1.4003E-01	1.4003E-01	0.507E-01
Bi-212	A	8.7248E-02	1.8693E-01	1.8702E-01	0.155E+00
BI-214		2.1331E-01	1.0175E-01	1.0274E-01	0.455E-01
CO-60	#A	1.3149E-02	1.3374E-02	1.3403E-02	0.147E-01
CS-137	A	1.7645E-02	2.7184E-02	2.7210E-02	0.221E-01
EU-152	C	7.2246E-02	4.2026E-02	4.2470E-02	0.593E-01
EU-154	#A	2.1420E-02	1.3735E-02	1.3854E-02	0.420E-01
K-40	#	1.0468E+00	6.5089E-01	6.5495E-01	0.570E+00
Pa-234	A	3.5213E-02	4.8710E-02	4.8807E-02	0.536E-01
Pb-210	#	5.7236E-01	5.5028E-01	5.5208E-01	0.390E+00
Pb-212	C	6.4951E-02	6.0264E-02	6.0466E-02	0.371E-01
PB-214		1.4771E-01	8.2184E-02	8.2866E-02	0.423E-01
RA-226	A	4.2391E-01	6.1437E-01	6.1520E-01	0.503E+00
Th-230	A	2.9422E-01	4.5855E+00	4.5857E+00	0.378E+01
Th-234	#A	-7.5339E-01	1.2232E+00	1.2253E+00	0.635E+00
Tl-208	C	5.6667E-02	3.2568E-02	3.4134E-02	0.423E-01
U-235	A	2.3948E-02	4.4143E-02	4.4180E-02	0.345E-01

- All peaks for activity calculation had bad shape.
* - Activity omitted from total
& - Activity omitted from total and all peaks had bad shape.
< - MDA value printed.
A - Activity printed, but activity < MDA.
B - Activity < MDA and failed test.
C - Area < Critical level.
F - Failed fraction or key line test.
H - Halflife limit exceeded

---------- S U M M A R Y ----------

Total Activity (33.3 to 2659.2 keV) 2.130E+00 pCi/g

Laboratory: New World Technology

ORTEC g v - i (3263) Npp32 G53W3.10 13-AUG-2010 19:36:26
New World Technology Spectrum name: 7N000507.An1

Sample description
Parcel E 03-PET-173-11 369g
8/13/10 10:20

Acquisition information
Start time: 13-Aug-2010 17:23:14
Live time: 5400
Real time: 5407

- -

***** S U M M A R Y O F N U C L I D E S I N S A M P L E *****

Nuclide		Time of Count Activity pCi/g	Uncertainty Counting pCi/g	2 Sigma Total pCi/g	MDA pCi/g
Ac-228		2.7820E-01	1.6418E-01	1.6530E-01	0.100E+00
AM-241	#	5.4686E-02	7.5394E-02	7.5551E-02	0.544E-01
Bi-212	A	1.8700E-01	2.6242E-01	2.6273E-01	0.207E+00
BI-214	C	1.0777E-01	1.3994E-01	1.4012E-01	0.706E-01
CO-60	A	1.9646E-02	1.6299E-02	1.6353E-02	0.246E-01
CS-137		3.5510E-02	3.2771E-02	3.2858E-02	0.247E-01
EU-152	#A	-7.6366E-02	1.2382E-01	1.2399E-01	0.896E-01
EU-154	C	5.7336E-02	6.6355E-02	6.6532E-02	0.410E-01
K-40		4.2895E+00	1.4621E+00	1.4923E+00	0.120E+01
Pa-234	C	1.0982E-01	1.1072E-01	1.1113E-01	0.619E-01
Pb-210		7.8558E-01	7.0528E-01	7.0799E-01	0.495E+00
Pb-212		7.3326E-02	7.3387E-02	7.3599E-02	0.533E-01
PB-214		1.0998E-01	8.2566E-02	8.2943E-02	0.575E-01
RA-226	#A	-1.0070E-01	1.4170E+00	1.4170E+00	0.636E+00
Th-230	#A	-1.0211E+01	1.7605E+02	1.7606E+02	0.360E+01
Th-234	#A	-1.3032E+00	2.4397E+00	2.4428E+00	0.812E+00
Tl-208	C	1.0643E-01	7.0189E-02	7.2766E-02	0.532E-01
U-235	C	5.9108E-02	6.3050E-02	6.3208E-02	0.394E-01

- All peaks for activity calculation had bad shape.
* - Activity omitted from total
& - Activity omitted from total and all peaks had bad shape.
< - MDA value printed.
A - Activity printed, but activity < MDA.
B - Activity < MDA and failed test.
C - Area < Critical level.
F - Failed fraction or key line test.
H - Halflife limit exceeded

---------- S U M M A R Y ----------

Total Activity (42.2 to 3353.9 keV) 5.499E+00 pCi/g

Laboratory: New World Technology

ORTEC g v - i (3263) Npp32 G53W3.10 13-AUG-2010 19:04:21
New World Technology Spectrum name: 1N000986.An1

Sample description
Parcel E 03-PET-173-12 315g
8/13/10 10:25

Acquisition information
Start time: 13-Aug-2010 17:29:52
Live time: 5400
Real time: 5402

- -

***** S U M M A R Y O F N U C L I D E S I N S A M P L E *****

Nuclide		Time of Count Activity pCi/g	Uncertainty Counting pCi/g	2 Sigma Total pCi/g	MDA pCi/g
Ac-228		2.4280E-01	1.1296E-01	1.1420E-01	0.711E-01
AM-241	#A	5.5724E-03	3.1611E-02	3.1615E-02	0.268E-01
Bi-212	C	3.4047E-01	2.5081E-01	2.5187E-01	0.172E+00
BI-214		2.1664E-01	7.4282E-02	7.5667E-02	0.329E-01
CO-60	#A	-4.1007E-02	4.4610E-01	4.4611E-01	0.250E-01
CS-137	#A	-6.3271E-03	1.4239E-01	1.4239E-01	0.246E-01
EU-152	#A	-2.0754E-01	2.6251E-01	2.6310E-01	0.621E-01
EU-154	A	6.1388E-03	4.2996E-02	4.2999E-02	0.185E-01
K-40		3.0312E+00	6.7190E-01	7.0421E-01	0.210E+00
Pa-234		5.2441E-02	6.6699E-02	6.6857E-02	0.438E-01
Pb-210	A	2.2802E-01	5.0611E-01	5.0643E-01	0.389E+00
Pb-212		1.4301E-01	5.5774E-02	5.6827E-02	0.390E-01
Pb-214		1.6911E-01	7.1000E-02	7.2032E-02	0.394E-01
RA-226	A	2.7498E-01	6.3795E-01	6.3829E-01	0.528E+00
Th-230	A	1.3518E+00	3.7672E+00	3.7741E+00	0.307E+01
Th-234	#A	-6.6538E-01	9.5716E-01	9.5925E-01	0.735E+00
Tl-208		5.5301E-02	1.9819E-02	2.2187E-02	0.963E-02
U-235	#C	3.7020E-02	4.4502E-02	4.4590E-02	0.370E-01

- All peaks for activity calculation had bad shape.
* - Activity omitted from total
& - Activity omitted from total and all peaks had bad shape.
< - MDA value printed.
A - Activity printed, but activity < MDA.
B - Activity < MDA and failed test.
C - Area < Critical level.
F - Failed fraction or key line test.
H - Halflife limit exceeded

---------- S U M M A R Y ----------

Total Activity (36.6 to 2885.2 keV) 3.858E+00 pCi/g

Laboratory: New World Technology

ORTEC g v - i (3263) Npp32 G53W3.10 13-AUG-2010 19:26:09
New World Technology Spectrum name: 2N000592.An1

Sample description
Parcel E 03-PET-173-13 355g
8/13/10 10:30

Acquisition information
Start time: 13-Aug-2010 17:33:37
Live time: 5400
Real time: 5408

- -

***** S U M M A R Y O F N U C L I D E S I N S A M P L E *****

Nuclide		Time of Count Activity pCi/g	Uncertainty 2 Sigma Counting pCi/g	Total pCi/g	MDA pCi/g
Ac-228		2.4509E-01	1.7190E-01	1.7274E-01	0.113E+00
AM-241	#A	-3.9126E-04	2.2883E-01	2.2883E-01	0.195E+00
Bi-212		2.0174E-01	2.1574E-01	2.1618E-01	0.180E+00
BI-214		3.8579E-01	1.1698E-01	1.1977E-01	0.547E-01
CO-60	#A	-2.7342E-03	3.4760E-02	3.4760E-02	0.299E-01
CS-137		7.3540E-02	4.0590E-02	4.0890E-02	0.292E-01
EU-152	A	-1.8675E-01	1.9732E-01	1.9796E-01	0.107E+00
EU-154	C	9.1663E-02	7.6906E-02	7.7297E-02	0.588E-01
K-40		1.0302E+01	1.1676E+00	1.3700E+00	0.759E+00
Pa-234		2.0002E-01	1.2464E-01	1.2587E-01	0.886E-01
Pb-210	#C	0.0000E+00	4.2579E+00	4.2579E+00	0.000E+00
Pb-212		1.4248E-01	7.7822E-02	7.8574E-02	0.580E-01
PB-214		3.2965E-01	1.4224E-01	1.4420E-01	0.685E-01
RA-226	#A	-1.7496E-01	1.8909E+00	1.8909E+00	0.653E+00
Th-230	#A	-6.5624E+00	4.3692E+01	4.3707E+01	0.121E+02
Th-234	A	1.0630E-01	1.1272E+00	1.1273E+00	0.968E+00
Tl-208	#	8.0053E-02	7.1370E-02	7.1567E-02	0.310E-01
U-235	#A	2.3020E-02	3.3398E-02	3.3443E-02	0.402E-01

- All peaks for activity calculation had bad shape.
* - Activity omitted from total
& - Activity omitted from total and all peaks had bad shape.
< - MDA value printed.
A - Activity printed, but activity < MDA.
B - Activity < MDA and failed test.
C - Area < Critical level.
F - Failed fraction or key line test.
H - Halflife limit exceeded

---------- S U M M A R Y ----------

Total Activity (32.4 to 2597.5 keV) 1.176E+01 pCi/g

Laboratory: New World Technology

ORTEC g v - i (3263) Npp32 G53W3.10 16-AUG-2010 15:25:22
New World Technology Spectrum name: 3N000675.An1

Sample description
Parcel E 03-PET-173-14 351g
8/13/10 10:35

Acquisition information
Start time: 16-Aug-2010 13:41:40
Live time: 5400
Real time: 5404

- -

***** S U M M A R Y O F N U C L I D E S I N S A M P L E *****

Nuclide		Time of Count Activity pCi/g	Uncertainty 2 Sigma Counting pCi/g	Total pCi/g	MDA pCi/g
Ac-228		4.4782E-01	2.0210E-01	2.0446E-01	0.101E+00
AM-241	A	3.7264E-02	7.7385E-02	7.7457E-02	0.628E-01
Bi-212	#A	-1.2666E-01	2.3673E-01	2.3673E-01	0.907E-01
BI-214		2.6466E-01	1.0487E-01	1.0634E-01	0.503E-01
CO-60	#A	-1.4969E-02	6.0461E-02	6.0470E-02	0.290E-01
CS-137	A	1.0522E-03	3.1051E-02	3.1051E-02	0.262E-01
EU-152	A	-1.2393E-01	9.5642E-02	9.6218E-02	0.968E-01
EU-154	C	1.3495E-01	6.5915E-02	6.6899E-02	0.512E-01
K-40		1.0016E+01	1.0328E+00	1.2459E+00	0.267E+00
Pa-234	#	2.6351E-01	1.6378E-01	1.6540E-01	0.790E-01
Pb-210	#A	-9.1697E-02	7.3915E-01	7.3919E-01	0.540E+00
Pb-212		7.3339E-02	7.9260E-02	7.9457E-02	0.538E-01
PB-214		2.0945E-01	1.0884E-01	1.0987E-01	0.601E-01
RA-226	#A	-7.4077E-01	2.8334E+00	2.8339E+00	0.728E+00
Th-230	#A	-1.1327E+01	6.8644E+01	6.8671E+01	0.465E+01
Th-234	#A	-1.3876E+00	1.9782E+00	1.9826E+00	0.945E+00
Tl-208		1.7884E-01	6.2607E-02	7.0426E-02	0.382E-01
U-235	A	1.6927E-02	4.4137E-02	4.4156E-02	0.460E-01

- All peaks for activity calculation had bad shape.
* - Activity omitted from total
& - Activity omitted from total and all peaks had bad shape.
< - MDA value printed.
A - Activity printed, but activity < MDA.
B - Activity < MDA and failed test.
C - Area < Critical level.
F - Failed fraction or key line test.
H - Halflife limit exceeded

---------- S U M M A R Y ----------

Total Activity (34.9 to 2779.2 keV) 1.138E+01 pCi/g

Laboratory: New World Technology

ORTEC g v - i (3263) Npp32 G53W3.10 13-AUG-2010 18:03:56
New World Technology Spectrum name: 5N000463.An1

Sample description
Parcel E 03-PET-173-15 371g
8/13/10 10:40

Acquisition information
Start time: 13-Aug-2010 17:17:06
Live time: 2700
Real time: 2702

- -

***** S U M M A R Y O F N U C L I D E S I N S A M P L E *****

Nuclide		Time of Count Activity pCi/g	Uncertainty Counting pCi/g	2 Sigma Total pCi/g	MDA pCi/g
Ac-228		2.3241E-01	1.5541E-01	1.5624E-01	0.120E+00
AM-241	#A	-3.9222E-03	1.9780E-01	1.9780E-01	0.445E-01
Bi-212	A	2.0469E-01	2.7732E-01	2.7767E-01	0.216E+00
BI-214		2.1093E-01	1.0079E-01	1.0176E-01	0.660E-01
CO-60	#	6.0429E-02	4.1206E-02	4.1408E-02	0.210E-01
CS-137	A	1.8021E-03	3.8958E-02	3.8958E-02	0.339E-01
EU-152	C	1.3708E-01	5.7572E-02	5.8734E-02	0.811E-01
EU-154	C	8.5394E-02	8.2508E-02	8.2824E-02	0.445E-01
K-40		1.2179E+01	1.6147E+00	1.8235E+00	0.858E+00
Pa-234	C	8.9094E-02	1.3188E-01	1.3211E-01	0.786E-01
Pb-210	A	5.5641E-01	7.9936E-01	8.0055E-01	0.588E+00
Pb-212	C	7.3482E-02	9.5959E-02	9.6122E-02	0.640E-01
Pb-214		2.1903E-01	1.0004E-01	1.0127E-01	0.567E-01
RA-226	A	1.4380E-01	7.7769E-01	7.7777E-01	0.649E+00
Th-230	#A	-2.5818E-01	5.7267E+00	5.7267E+00	0.534E+00
Th-234	#A	-1.8839E+00	4.8385E+00	4.8418E+00	0.105E+01
Tl-208	C	8.6112E-02	6.3944E-02	6.5802E-02	0.544E-01
U-235	#A	5.1869E-03	1.1089E-02	1.1096E-02	0.489E-01

- All peaks for activity calculation had bad shape.
* - Activity omitted from total
& - Activity omitted from total and all peaks had bad shape.
< - MDA value printed.
A - Activity printed, but activity < MDA.
B - Activity < MDA and failed test.
C - Area < Critical level.
F - Failed fraction or key line test.
H - Halflife limit exceeded

---------- S U M M A R Y ----------

Total Activity (37.9 to 3020.7 keV) 1.290E+01 pCi/g

Laboratory: New World Technology

ORTEC g v - i (3263) Npp32 G53W3.10 13-AUG-2010 19:09:37
New World Technology Spectrum name: 3N000676.An1

Sample description
Parcel E 03-PET-173-16 384g
8/13/10 10:45

Acquisition information
Start time: 13-Aug-2010 17:47:54
Live time: 2700
Real time: 2702

- -

***** S U M M A R Y O F N U C L I D E S I N S A M P L E *****

Nuclide		Time of Count Activity pCi/g	Uncertainty Counting pCi/g	2 Sigma Total pCi/g	MDA pCi/g
Ac-228		3.4795E-01	1.5859E-01	1.6040E-01	0.948E-01
AM-241		8.0250E-02	9.7272E-02	9.7535E-02	0.768E-01
Bi-212	A	2.5697E-01	2.9616E-01	2.9668E-01	0.288E+00
BI-214		3.2980E-01	1.4924E-01	1.5084E-01	0.621E-01
CO-60	#A	6.7730E-03	1.0975E-02	1.0984E-02	0.327E-01
CS-137	#A	-7.6663E-03	3.5871E-02	3.5871E-02	0.109E-01
EU-152	#A	-1.3856E-01	1.7075E-01	1.7115E-01	0.108E+00
EU-154	C	7.2893E-02	8.0516E-02	8.0752E-02	0.613E-01
K-40		1.3523E+01	1.4882E+00	1.7606E+00	0.237E+00
Pa-234		1.4221E-01	9.7841E-02	9.8630E-02	0.101E+00
Pb-210	#A	-2.3260E-01	1.7649E+00	1.7650E+00	0.749E+00
Pb-212	C	6.7367E-02	7.6018E-02	7.6191E-02	0.657E-01
PB-214		2.3159E-01	1.5100E-01	1.5191E-01	0.786E-01
RA-226	#A	-4.1000E-01	2.0121E+00	2.0123E+00	0.893E+00
Th-230	#A	-9.4705E+00	5.3633E+01	5.3657E+01	0.592E+01
Th-234	#A	-3.6696E-01	1.4711E+00	1.4715E+00	0.120E+01
Tl-208	C	7.0211E-02	4.6598E-02	4.8288E-02	0.494E-01
U-235	A	1.1489E-02	1.1088E-02	1.1122E-02	0.637E-01

- All peaks for activity calculation had bad shape.
* - Activity omitted from total
& - Activity omitted from total and all peaks had bad shape.
< - MDA value printed.
A - Activity printed, but activity < MDA.
B - Activity < MDA and failed test.
C - Area < Critical level.
F - Failed fraction or key line test.
H - Halflife limit exceeded

---------- S U M M A R Y ----------

Total Activity (34.9 to 2779.2 keV) 1.457E+01 pCi/g

Laboratory: New World Technology

ORTEC g v - i (3263) Npp32 G53W3.10 13-AUG-2010 20:00:06
New World Technology Spectrum name: 1N000987.An1

Sample description
Parcel E 03-PET-173-17 361g
8/13/10 10:50

Acquisition information
Start time: 13-Aug-2010 19:08:18
Live time: 2700
Real time: 2701

- -

***** S U M M A R Y O F N U C L I D E S I N S A M P L E *****

Nuclide		Time of Count Activity pCi/g	Uncertainty Counting pCi/g	2 Sigma Total pCi/g	MDA pCi/g
Ac-228	C	1.0485E-01	7.2645E-02	7.3006E-02	0.683E-01
AM-241	#	4.7377E-02	5.4705E-02	5.4868E-02	0.383E-01
Bi-212	C	4.4271E-01	2.9984E-01	3.0135E-01	0.168E+00
BI-214		1.5133E-01	8.7849E-02	8.8423E-02	0.491E-01
CO-60	#A	3.5011E-03	3.0333E-03	3.0425E-03	0.449E-01
CS-137	A	2.4807E-03	1.9712E-02	1.9713E-02	0.176E-01
EU-152	A	-1.2541E-01	1.2800E-01	1.2844E-01	0.762E-01
EU-154	C	6.0237E-02	4.9695E-02	4.9956E-02	0.276E-01
K-40	#	1.1890E+01	1.5760E+00	1.7799E+00	0.335E+00
Pa-234	#C	1.5029E-01	8.8064E-02	8.9042E-02	0.449E-01
Pb-210	A	1.1470E-01	5.0400E-01	5.0408E-01	0.447E+00
Pb-212	A	4.5567E-02	5.6722E-02	5.6828E-02	0.467E-01
Pb-214		7.0857E-02	8.2568E-02	8.2725E-02	0.493E-01
RA-226	A	1.7349E-01	7.0784E-01	7.0797E-01	0.591E+00
Th-230	A	3.1353E+00	5.1338E+00	5.1612E+00	0.351E+01
Th-234	A	1.2794E-01	1.3374E+00	1.3374E+00	0.102E+01
Tl-208	#A	1.4861E-02	1.1821E-02	1.2121E-02	0.168E-01
U-235	#A	1.4923E-02	2.2102E-02	2.2131E-02	0.450E-01

- All peaks for activity calculation had bad shape.
* - Activity omitted from total
& - Activity omitted from total and all peaks had bad shape.
< - MDA value printed.
A - Activity printed, but activity < MDA.
B - Activity < MDA and failed test.
C - Area < Critical level.
F - Failed fraction or key line test.
H - Halflife limit exceeded

---------- S U M M A R Y ----------

Total Activity (36.6 to 2885.2 keV) 1.204E+01 pCi/g

Laboratory: New World Technology

ORTEC g v - i (3263) Npp32 G53W3.10 13-AUG-2010 22:12:18
New World Technology Spectrum name: 3N000677.An1

Sample description
Parcel E 03-PET-173-18 358g
8/13/10 10:55

Acquisition information
Start time: 13-Aug-2010 20:37:53
Live time: 5400
Real time: 5404

- -

***** S U M M A R Y O F N U C L I D E S I N S A M P L E *****

Nuclide		Time of Count Activity pCi/g	Uncertainty Counting pCi/g	2 Sigma Total pCi/g	MDA pCi/g
Ac-228	C	1.1409E-01	1.1950E-01	1.1976E-01	0.943E-01
AM-241	A	2.2627E-03	7.2449E-02	7.2450E-02	0.598E-01
Bi-212	C	2.8042E-01	2.5903E-01	2.5973E-01	0.188E+00
BI-214		1.5374E-01	7.1613E-02	7.2339E-02	0.424E-01
CO-60	#A	-3.6711E-02	1.6653E-01	1.6654E-01	0.266E-01
CS-137		3.6492E-02	3.1450E-02	3.1546E-02	0.235E-01
EU-152	#A	-9.8141E-02	7.5772E-02	7.6227E-02	0.820E-01
EU-154	C	7.7524E-02	8.0644E-02	8.0911E-02	0.502E-01
K-40		1.3535E+01	1.1889E+00	1.5166E+00	0.288E+00
Pa-234		1.6092E-01	8.4371E-02	8.5539E-02	0.755E-01
Pb-210	#A	-6.6781E-02	6.9570E-01	6.9572E-01	0.532E+00
Pb-212	C	5.4584E-02	7.8602E-02	7.8712E-02	0.519E-01
PB-214		1.9745E-01	8.3478E-02	8.4674E-02	0.459E-01
RA-226	#A	-1.7963E-01	9.3901E-01	9.3911E-01	0.634E+00
Th-230	#A	-9.7972E+00	4.6658E+01	4.6688E+01	0.570E+01
Th-234		1.0972E+00	1.3676E+00	1.3716E+00	0.963E+00
Tl-208	A	-5.7073E-03	3.9890E-03	4.1197E-03	0.395E-01
U-235	#A	-1.6178E-02	2.6711E-02	2.6739E-02	0.453E-01

- All peaks for activity calculation had bad shape.
* - Activity omitted from total
& - Activity omitted from total and all peaks had bad shape.
< - MDA value printed.
A - Activity printed, but activity < MDA.
B - Activity < MDA and failed test.
C - Area < Critical level.
F - Failed fraction or key line test.
H - Halflife limit exceeded

---------- S U M M A R Y ----------

Total Activity (34.9 to 2779.2 keV) 1.408E+01 pCi/g

Laboratory: New World Technology

Tetra Tech EC, Inc.

Client Sample ID: 03-PET-173-06

Radiochemistry

Lab Sample ID: F0H190502-001
Work Order: L5T2Q
Matrix: SOLID

Date Collected: 08/13/10 0955
Date Received: 08/19/10 0920

Parameter	Result	Qual	Total Uncert. (2 σ+/-)	RL	MDL	Count Time	Prep Date	Analysis Date
Total SR BY GFPC	EPA-905 MOD			pCi/g		Batch # 0232108		Yld % 85.
Strontium Total	0.0630	U	0.123	0.320	0.124	200	08/20/10	08/26/10

NOTE(S)

Data are incomplete without the case narrative.
Bold results are greater than the MDL.

U Result is less than the sample detection limit.

The MDL is an estimate of the measured concentration at which there is a 99% confidence that a given analyte is given sample matrix. This is functionally analogous to the "critical value" or the "limit of detection".

Ra-226 results analyzed by EPA 901.1 MOD were calculated and reported from the 46.09 percent abundant 609.31 KeV line of Bi-214.

Tetra Tech EC, Inc.

Client Sample ID: 03-PET-173-13

Radiochemistry

Lab Sample ID: F0H190502-002
Work Order: L5T2X
Matrix: SOLID

Date Collected: 08/13/10 1030
Date Received: 08/19/10 0920

Parameter	Result	Qual	Total Uncert. (2 σ+/-)	RL	MDL	Count Time	Prep Date	Analysis Date
Total SR BY GFPC	EPA-905 MOD			pCi/g		Batch # 0232108		Yld % 83.
Strontium Total	0.0133	U	0.130	0.320	0.137	200	08/20/10	08/26/10

NOTE(S)

Data are incomplete without the case narrative.
Bold results are greater than the MDL.

U Result is less than the sample detection limit.

The MDL is an estimate of the measured concentration at which there is a 99% confidence that a given analyte is given sample matrix. This is functionally analogous to the "critical value" or the "limit of detection".

Ra-226 results analyzed by EPA 901.1 MOD were calculated and reported from the 46.09 percent abundant 609.31 KeV line of Bi-214.

ATTACHMENT 3

EXCAVATED SOIL UNIT SCAN DATA
(on CD only)

This page intentionally left blank.

EXCAVATED SOIL UNIT 281

Pile 281, Pad C10

Sample ID	Gamma Total cps	Latitude	Longitude
1	992	37.72087442	-122.3647291
2	1031	37.72087416	-122.3647286
3	965	37.72086944	-122.3647208
4	913	37.72086343	-122.3647125
5	916	37.72085784	-122.3647041
6	859	37.72085318	-122.364696
7	947	37.72085055	-122.3646883
8	984	37.72085026	-122.3646812
9	996	37.72085169	-122.3646745
10	934	37.72085526	-122.3646656
11	875	37.72085992	-122.3646573
12	1107	37.72086537	-122.3646499
13	[illegible]	37.72087137	-122.3646429
14	[illegible]	37.72087782	-122.3646363
15	[illegible]	37.72088459	-122.3646297
16	[illegible]	37.72089092	-122.3646227
17	[illegible]	37.72089745	-122.3646165
18	[illegible]	37.720904	-122.3646098
19	[illegible]	**37.72091089**	**-122.3646034**
20	[illegible]	37.72091898	-122.3645952
21	[illegible]	37.72092721	-122.3645869
22	[illegible]	37.72093526	-122.3645792
23	[illegible]	37.72094378	-122.3645723
24	1163	37.7209519	-122.3645642
25	1058	37.72095973	-122.3645572
26	1081	37.72096824	-122.3645494
27	1169	37.72097648	-122.3645423
28	1154	37.72098438	-122.3645349
29	1128	37.72099225	-122.3645274
30	1121	37.7210006	-122.3645201
31	1121	37.72100879	-122.3645126
32	1143	37.72101624	-122.3645055
33	1110	37.72102342	-122.3644992
34	1140	37.72103153	-122.3644919
35	1143	37.72103872	-122.3644858
36	1109	37.72104557	-122.3644795
37	1083	37.72105112	-122.3644743
38	1167	37.72105707	-122.3644693
39	1138	37.72106309	-122.364465
40	1194	37.72106908	-122.3644626
41	1185	37.7210748	-122.3644625
42	1179	37.7210802	-122.3644641
43	[illegible]	37.72108572	-122.3644675
44	[illegible]	37.72109234	-122.3644732
45	1212	37.72109859	-122.3644793
46	[illegible]	37.72110388	-122.3644862
47	1122	37.72110887	-122.3644932
48	1204	37.72111415	-122.3645008
49	1198	37.72111927	-122.3645089
50	1151	37.72112383	-122.3645169
51	1153	37.72112898	-122.364525
52	1148	37.72113391	-122.3645331
53	1145	37.72113832	-122.3645409
54	1192	37.72114353	-122.3645495
55	1213	37.72114786	-122.3645576
56	[illegible]	37.72115285	-122.3645665
57	1145	37.72115754	-122.3645748
58	1043	37.72116276	-122.3645833
59	1073	37.72116797	-122.3645914
60	1042	37.72117288	-122.3646004
61	1028	37.72117784	-122.3646089
62	973	37.72118284	-122.3646174

Pile 281, Pad C10

Sample ID	Gamma Total cps	Latitude	Longitude
63	960	37.72118734	-122.3646259
64	1000	37.72119225	-122.3646344
65	939	37.72119702	-122.3646423
66	982	37.72120205	-122.3646501
67	938	37.72120466	-122.3646574
68	928	37.72120525	-122.3646642
69	917	37.72120457	-122.3646717
70	931	37.72120117	-122.3646795
71	923	37.72119764	-122.3646873
72	945	37.72119232	-122.3646949
73	928	37.72118718	-122.3647017
74	914	37.72118096	-122.3647086
75	868	37.72117478	-122.3647146
76	890	37.72116779	-122.3647212
77	916	37.7211607	-122.3647274
78	840	37.72115388	-122.3647339
79	949	37.72114721	-122.3647397
80	1061	37.72114	-122.3647458
81	1166	37.72113295	-122.3647514
82	[illegible]	37.72112615	-122.3647574
83	1085	37.72111972	-122.3647634
84	1181	37.72111251	-122.3647699
85	[illegible]	37.72110575	-122.3647762
86	[illegible]	37.72109903	-122.3647825
87	[illegible]	37.72109278	-122.3647889
88	[illegible]	37.72108573	-122.3647957
89	[illegible]	37.72107948	-122.364803
90	[illegible]	37.72107233	-122.3648096
91	[illegible]	37.72106621	-122.364816
92	[illegible]	37.72105991	-122.3648225
93	**1290**	**37.72105377**	**-122.3648287**
94	[illegible]	37.72104657	-122.3648349
95	[illegible]	37.72103999	-122.3648414
96	[illegible]	37.72103351	-122.3648477
97	[illegible]	37.72102727	-122.3648534
98	1165	37.72102054	-122.3648597
99	1101	37.7210137	-122.3648658
100	1141	37.72100693	-122.3648716
101	1115	37.72100163	-122.3648774
102	933	37.72099624	-122.3648831
103	920	37.72099082	-122.3648864
104	870	37.72098529	-122.3648882
105	866	37.72098006	-122.3648885
106	862	37.72097367	-122.364886
107	891	37.72096766	-122.3648828
108	910	37.72096166	-122.3648778
109	992	37.72095603	-122.3648718
110	985	37.72095086	-122.3648652
111	977	37.72094626	-122.3648586
112	964	37.72094109	-122.364851
113	1011	37.72093645	-122.3648443
114	1023	37.72093205	-122.364836
115	1032	37.72092726	-122.3648289
116	992	37.72092324	-122.3648212
117	1084	37.72091926	-122.364814
118	1047	37.72091473	-122.3648065
119	1089	37.72091024	-122.3647983
120	1044	37.72090618	-122.3647897
121	1096	37.72090103	-122.3647813
122	1126	37.72089684	-122.3647737
123	1100	37.72089228	-122.3647659
124	1106	37.7208873	-122.3647571

Pile 281, Pad C10

Sample ID	Gamma Total cps	Latitude	Longitude
125	1052	37.72088276	-122.364749
126	1099	37.72087819	-122.3647415
127	1119	37.72087413	-122.3647344
128	1067	37.72087002	-122.3647271
129	960	37.72086573	-122.3647197
130	931	37.72086064	-122.3647118
131	935	37.72085662	-122.3647045
132	863	37.72085381	-122.3646967
133	927	37.7208525	-122.3646894
134	1015	37.72085322	-122.3646832
135	982	37.7208552	-122.3646773
136	948	37.72085867	-122.3646702
137	888	37.72086321	-122.3646631
138	1082	37.7208684	-122.3646564
139	[illegible]	37.72087357	-122.3646496
140	[illegible]	37.72087983	-122.3646434
141	[illegible]	37.7208857	-122.364637
142	[illegible]	37.72089138	-122.3646311
143	[illegible]	37.72089719	-122.3646254
144	[illegible]	37.72090339	-122.3646194
145	[illegible]	37.72090961	-122.3646138
146	[illegible]	37.72091565	-122.3646085
147	[illegible]	37.72092115	-122.3646035
148	[illegible]	37.72092752	-122.3645982
149	[illegible]	37.72093298	-122.3645933
150	[illegible]	37.72093934	-122.3645876
151	[illegible]	37.72094505	-122.3645823
152	[illegible]	37.72095105	-122.3645769
153	[illegible]	37.72095708	-122.3645715
154	[illegible]	37.72096327	-122.364566
155	1145	37.72096923	-122.3645607
156	1186	37.72097537	-122.364555
157	1165	37.72098102	-122.3645497
158	1144	37.72098731	-122.364544
159	1127	37.7209929	-122.3645385
160	1163	37.7209992	-122.3645327
161	1089	37.72100549	-122.3645269
162	1156	37.72101165	-122.3645214
163	1178	37.72101791	-122.3645161
164	[illegible]	37.72102425	-122.3645107
165	1213	37.7210303	-122.3645053
166	1153	37.72103626	-122.3645001
167	1203	37.72104198	-122.3644953
168	1139	37.72104759	-122.3644906
169	1156	37.7210533	-122.3644855
170	1144	37.7210591	-122.3644809
171	[illegible]	37.72106405	-122.364478
172	1179	37.72106992	-122.3644763
173	1157	37.72107539	-122.3644765
174	1188	37.72108108	-122.3644791
175	[illegible]	37.72108709	-122.3644826
176	1165	37.72109309	-122.3644882
177	[illegible]	37.72109833	-122.3644943
178	1161	37.72110342	-122.3645013
179	1162	37.72110825	-122.3645081
180	1139	37.72111335	-122.3645159
181	1170	37.72111821	-122.364523
182	1127	37.72112318	-122.3645308
183	1138	37.72112811	-122.3645382
184	1175	37.72113279	-122.3645459
185	1111	37.72113744	-122.3645534
186	1131	37.72114197	-122.3645613

Pile 281, Pad C10

Sample ID	Gamma Total cps	Latitude	Longitude
187	[illegible]	37.72114664	-122.3645693
188	1132	37.72115085	-122.3645771
189	1081	37.72115503	-122.3645851
190	1025	37.72115988	-122.3645936
191	1067	37.72116482	-122.3646016
192	1050	37.72116948	-122.3646093
193	1049	37.72117427	-122.3646171
194	1003	37.72117895	-122.3646251
195	983	37.72118347	-122.3646331
196	969	37.72118791	-122.3646407
197	984	37.72119246	-122.3646482
198	979	37.72119496	-122.3646551
199	922	37.72119572	-122.3646624
200	964	37.72119543	-122.3646694
201	948	37.72119384	-122.3646766
202	969	37.72118983	-122.3646833
203	947	37.72118527	-122.3646904
204	928	37.72117999	-122.364697
205	914	37.72117397	-122.3647034
206	969	37.72116818	-122.3647096
207	959	37.72116227	-122.3647156
208	932	37.7211559	-122.3647215
209	859	37.7211494	-122.3647275
210	870	37.72114329	-122.364733
211	1083	37.72113675	-122.364739
212	[illegible]	37.72113027	-122.3647449
213	[illegible]	37.72112409	-122.3647504
214	1169	37.72111778	-122.3647561
215	1135	37.72111132	-122.3647616
216	1192	37.72110469	-122.3647675
217	[illegible]	37.72109832	-122.364773
218	[illegible]	37.72109215	-122.3647786
219	[illegible]	37.72108568	-122.3647849
220	[illegible]	37.72107973	-122.3647907
221	[illegible]	37.72107328	-122.3647971
222	[illegible]	37.7210673	-122.3648035
223	[illegible]	37.72106135	-122.3648098
224	[illegible]	37.72105596	-122.3648153
225	[illegible]	37.72105049	-122.3648211
226	[illegible]	37.7210445	-122.364827
227	[illegible]	37.72103869	-122.3648331
228	[illegible]	37.72103289	-122.3648381
229	[illegible]	37.72102644	-122.3648442
230	[illegible]	37.72102051	-122.3648501
231	1146	37.72101455	-122.3648558
232	1128	37.72100817	-122.364861
233	1133	37.7210023	-122.364866
234	1075	37.72099692	-122.3648713
235	901	37.72099127	-122.3648749
236	919	37.72098613	-122.364876
237	919	37.72098056	-122.3648752
238	904	37.72097575	-122.3648723
239	951	37.72096983	-122.3648683
240	1035	37.72096449	-122.3648633
241	992	37.72095911	-122.364857
242	973	37.72095347	-122.3648502
243	929	37.72094873	-122.3648428
244	986	37.72094399	-122.3648364
245	1086	37.72093952	-122.3648287
246	1066	37.72093523	-122.364822
247	1063	37.72093089	-122.3648143
248	1051	37.72092648	-122.3648066

Pile 281, Pad C10

Sample ID	Gamma Total cps	Latitude	Longitude
249	1069	37.72092232	-122.3647993
250	1042	37.72091808	-122.3647919
251	1005	37.7209137	-122.3647836
252	1046	37.72090944	-122.3647758
253	1136	37.72090488	-122.3647678
254	1145	37.72090021	-122.3647601
255	1118	37.72089546	-122.3647515
256	1085	37.72089077	-122.364744
257	1024	37.72088658	-122.3647364
258	1031	37.72088237	-122.3647294
259	1021	37.72087827	-122.364722
260	901	37.72087432	-122.3647152
261	882	37.72087011	-122.3647071
262	901	37.72086706	-122.3646995
263	898	37.72086535	-122.3646923
264	944	37.72086546	-122.3646863
265	927	37.72086715	-122.3646797
266	952	37.72086991	-122.3646732
267	1100	37.72087381	-122.364666
268	1167	37.72087802	-122.3646595
269	[illegible]	37.7208832	-122.3646527
270	[illegible]	37.72088876	-122.3646466
271	[illegible]	37.720894	-122.3646406
272	[illegible]	37.72089961	-122.3646349
273	[illegible]	37.72090518	-122.3646291
274	[illegible]	37.7209109	-122.3646233
275	[illegible]	37.72091643	-122.3646179
276	[illegible]	37.72092221	-122.3646125
277	[illegible]	37.72092784	-122.3646073
278	[illegible]	37.72093353	-122.3646021
279	[illegible]	37.72093947	-122.3645968
280	[illegible]	37.72094508	-122.3645918
281	[illegible]	37.72095107	-122.3645862
282	[illegible]	37.7209569	-122.3645812
283	1212	37.72096309	-122.3645759
284	1209	37.7209686	-122.3645711
285	1134	37.72097447	-122.3645659
286	1155	37.72098005	-122.3645608
287	1130	37.72098617	-122.3645552
288	1111	37.72099189	-122.3645502
289	1155	37.72099752	-122.3645447
290	1188	37.72100338	-122.3645398
291	1080	37.72100944	-122.3645346
292	1148	37.72101502	-122.3645301
293	1189	37.7210212	-122.3645252
294	1200	37.72102675	-122.36452
295	1146	37.7210325	-122.364515
296	1143	37.72103813	-122.3645099
297	1168	37.72104349	-122.3645047
298	1130	37.72104878	-122.3645005
299	1147	37.72105455	-122.3644952
300	1095	37.72105999	-122.3644908
301	1089	37.72106533	-122.3644882
302	1058	37.7210705	-122.3644877
303	1161	37.72107574	-122.3644889
304	1208	37.72108104	-122.3644915
305	1157	37.72108634	-122.3644957
306	[illegible]	37.72109165	-122.3645008
307	[illegible]	37.72109743	-122.3645067
308	1148	37.72110244	-122.3645133
309	1047	37.72110678	-122.3645203
310	1103	37.72111127	-122.3645274

Pile 281, Pad C10

Sample ID	Gamma Total cps	Latitude	Longitude
311	1150	37.72111598	-122.3645345
312	1130	37.7211205	-122.3645416
313	1136	37.72112505	-122.3645489
314	1141	37.72112942	-122.3645564
315	1130	37.72113397	-122.3645645
316	1130	37.72113853	-122.3645719
317	1166	37.72114251	-122.3645791
318	1079	37.7211471	-122.3645867
319	997	37.72115127	-122.3645939
320	980	37.7211561	-122.3646021
321	1008	37.72116029	-122.3646096
322	999	37.72116508	-122.3646169
323	1061	37.72116975	-122.3646239
324	979	37.72117445	-122.3646316
325	959	37.72117877	-122.3646387
326	991	37.72118315	-122.3646462
327	986	37.72118562	-122.3646528
328	953	37.72118619	-122.3646587
329	978	37.72118535	-122.3646646
330	1022	37.72118304	-122.3646718
331	1053	37.72117944	-122.3646789
332	1016	37.72117513	-122.364686
333	1019	37.72117037	-122.3646923
334	1092	37.72116505	-122.3646987
335	908	37.72115951	-122.3647048
336	844	37.72115345	-122.3647111
337	874	37.72114779	-122.3647165
338	956	37.7211416	-122.3647224
339	1032	37.72113566	-122.3647282
340	1231	37.72112946	-122.3647341
341	**1245**	**37.72112335**	**-122.3647397**
342	1171	37.72111712	-122.3647452
343	1187	37.72111141	-122.3647505
344	1178	37.72110496	-122.3647561
345	1207	37.72109892	-122.3647615
346	1248	37.72109283	-122.3647671
347	1293	37.72108676	-122.3647728
348	1290	37.72108117	-122.3647788
349	1274	37.72107557	-122.3647845
350	1273	37.7210695	-122.3647907
351	1290	37.72106389	-122.3647966
352	1294	37.72105797	-122.364803
353	1313	37.72105246	-122.3648085
354	1314	37.72104632	-122.3648142
355	1246	37.72104055	-122.3648197
356	1290	37.72103437	-122.3648252
357	1315	37.72102817	-122.3648308
358	1292	37.72102181	-122.3648364
359	1231	37.72101569	-122.3648416
360	1184	37.72100988	-122.364847
361	1164	37.72100378	-122.3648526
362	1170	37.72099808	-122.3648577
363	1084	37.72099223	-122.3648617
364	913	37.72098645	-122.364864
365	918	37.72098005	-122.364864
366	959	37.72097465	-122.3648626
367	992	37.72096888	-122.3648592
368	1017	37.72096332	-122.3648551
369	993	37.72095731	-122.3648493
370	960	37.72095228	-122.3648431
371	942	37.72094694	-122.3648359
372	1042	37.72094238	-122.3648291

Pile 281, Pad C10

Sample ID	Gamma Total cps	Latitude	Longitude
373	1104	37.7209378	-122.3648224
374	1074	37.72093368	-122.3648155
375	1068	37.72092896	-122.3648079
376	1093	37.72092452	-122.3648013
377	1046	37.72092051	-122.364794
378	1019	37.72091614	-122.3647866
379	1036	37.72091174	-122.3647788
380	1095	37.72090764	-122.3647713
381	1081	37.72090343	-122.3647629
382	1129	37.72089913	-122.3647553
383	1130	37.72089463	-122.3647477
384	1024	37.72088989	-122.3647401
385	1011	37.72088581	-122.3647328
386	1031	37.72088217	-122.3647256
387	1012	37.72087778	-122.3647182
388	915	37.72087427	-122.3647106
389	928	37.72087181	-122.3647031
390	912	37.720871	-122.3646962
391	928	37.72087089	-122.3646899
392	865	37.72087239	-122.3646839
393	1007	37.72087521	-122.3646769
394	[illegible]	37.72087895	-122.3646699
395	[illegible]	37.72088548	-122.364662
396	[illegible]	37.72089114	-122.3646548
397	[illegible]	37.72089769	-122.364648
398	[illegible]	37.72090384	-122.3646416
399	[illegible]	37.72091004	-122.3646353
400	[illegible]	37.72091617	-122.3646296
401	[illegible]	37.7209221	-122.364624
402	[illegible]	37.72092784	-122.3646187
403	[illegible]	37.72093387	-122.3646137
404	[illegible]	37.72093939	-122.3646088
405	[illegible]	37.72094525	-122.3646037
406	[illegible]	37.72095131	-122.3645985
407	[illegible]	37.72095696	-122.3645931
408	1205	37.72096254	-122.3645879
409	1081	37.72096823	-122.3645825
410	1129	37.72097407	-122.3645769
411	1104	37.72097985	-122.3645718
412	1127	37.72098608	-122.3645665
413	1191	37.72099166	-122.3645613
414	1078	37.72099809	-122.3645557
415	1072	37.72100407	-122.3645504
416	1150	37.72101009	-122.3645455
417	1158	37.72101585	-122.3645406
418	1173	37.72102219	-122.3645354
419	1131	37.72102786	-122.3645306
420	1060	37.72103338	-122.3645256
421	1029	37.72103907	-122.364521
422	1098	37.7210445	-122.3645157
423	1172	37.7210504	-122.3645114
424	1112	37.72105592	-122.3645069
425	1106	37.72106132	-122.3645038
426	1101	37.72106671	-122.3645025
427	1148	37.72107124	-122.3645024
428	1153	37.72107678	-122.3645042
429	1087	37.72108236	-122.3645077
430	1159	37.72108836	-122.3645121
431	1182	37.72109337	-122.3645173
432	981	37.72109865	-122.3645234
433	979	37.72110341	-122.3645298
434	1100	37.72110792	-122.3645371

Pile 281, Pad C10

Sample ID	Gamma Total cps	Latitude	Longitude
435	1169	37.72111245	-122.3645445
436	1148	37.7211169	-122.3645517
437	1079	37.72112131	-122.3645593
438	1030	37.72112583	-122.3645664
439	1058	37.72113014	-122.3645738
440	1053	37.72113433	-122.3645808
441	1095	37.72113875	-122.3645881
442	1072	37.72114318	-122.3645952
443	985	37.72114781	-122.3646021
444	960	37.72115191	-122.3646099
445	996	37.72115641	-122.3646172
446	1041	37.72116058	-122.3646246
447	1027	37.72116463	-122.3646315
448	1008	37.72116861	-122.3646387
449	997	37.72117164	-122.3646461
450	984	37.72117249	-122.364653
451	1016	37.72117319	-122.36466
452	1046	37.72117167	-122.3646675
453	1092	37.7211691	-122.3646744
454	1112	37.72116561	-122.3646815
455	1044	37.72116054	-122.3646886
456	980	37.72115588	-122.3646948
457	888	37.72115044	-122.3647017
458	860	37.7211451	-122.3647073
459	929	37.72113912	-122.3647132
460	1068	37.72113346	-122.364719
461	1206	37.7211276	-122.3647243
462	1191	37.72112151	-122.3647301
463	1073	37.721116	-122.3647357
464	[illegible]	37.72110992	-122.3647412
465	1197	37.72110375	-122.3647466
466	1191	37.72109796	-122.3647521
467	1187	37.72109222	-122.3647576
468	[illegible]	37.72108623	-122.3647629
469	[illegible]	37.72108047	-122.3647687
470	[illegible]	37.72107484	-122.3647746
471	[illegible]	37.72106917	-122.36478
472	[illegible]	37.7210631	-122.3647862
473	[illegible]	37.7210572	-122.3647917
474	[illegible]	37.72105106	-122.3647972
475	[illegible]	37.72104508	-122.3648024
476	[illegible]	37.72103948	-122.3648079
477	[illegible]	37.72103367	-122.3648133
478	[illegible]	37.72102688	-122.3648182
479	[illegible]	37.72102107	-122.3648237
480	[illegible]	37.72101523	-122.364829
481	[illegible]	37.72100887	-122.3648337
482	[illegible]	37.72100305	-122.3648383
483	[illegible]	37.72099696	-122.3648432
484	[illegible]	37.72099088	-122.3648472
485	1184	37.72098556	-122.364849
486	1099	37.72098023	-122.3648493
487	1078	37.72097494	-122.3648475
488	978	37.72096888	-122.364844
489	984	37.72096362	-122.364839
490	983	37.72095798	-122.3648329
491	1045	37.72095309	-122.3648266
492	1084	37.72094839	-122.3648197
493	1181	37.72094389	-122.3648127
494	1141	37.72093967	-122.3648053
495	1125	37.72093547	-122.3647978
496	1118	37.72093126	-122.3647901

Pile 281, Pad C10

Sample ID	Gamma Total cps	Latitude	Longitude
497	1084	37.72092747	-122.3647822
498	1087	37.72092293	-122.3647746
499	1122	37.72091874	-122.3647669
500	1113	37.72091492	-122.3647591
501	1060	37.72091074	-122.364752
502	1093	37.72090567	-122.3647439
503	1085	37.7209014	-122.3647363
504	1067	37.7208973	-122.3647289
505	1044	37.72089304	-122.3647216
506	1017	37.72088901	-122.3647145
507	996	37.72088626	-122.3647068
508	989	37.72088481	-122.3647
509	1066	37.72088442	-122.3646937
510	1179	37.72088559	-122.3646864
511	[illegible]	37.72088797	-122.3646793
512	[illegible]	37.72089109	-122.3646725
513	[illegible]	37.72089503	-122.3646664
514	[illegible]	37.72089945	-122.3646601
515	[illegible]	37.72090463	-122.3646544
516	[illegible]	37.72091021	-122.3646475
517	[illegible]	37.72091567	-122.3646418
518	[illegible]	37.72092111	-122.3646367
519	[illegible]	37.72092662	-122.364631
520	[illegible]	37.7209321	-122.3646257
521	[illegible]	37.72093749	-122.3646207
522	[illegible]	37.72094324	-122.3646155
523	[illegible]	37.72094862	-122.3646103
524	[illegible]	37.72095424	-122.3646054
525	[illegible]	37.72095986	-122.3646005
526	1174	37.72096576	-122.3645958
527	1076	37.72097152	-122.3645907
528	1148	37.7209768	-122.3645855
529	1179	37.72098284	-122.3645805
530	1109	37.72098842	-122.3645752
531	1176	37.72099463	-122.3645698
532	1163	37.72100005	-122.3645644
533	1071	37.72100578	-122.3645594
534	1087	37.72101163	-122.3645542
535	1164	37.72101711	-122.3645489
536	1164	37.7210225	-122.3645435
537	1166	37.72102776	-122.3645386
538	1141	37.72103331	-122.3645337
539	1118	37.72103882	-122.364529
540	1030	37.72104419	-122.3645238
541	1142	37.72104957	-122.3645192
542	1153	37.72105517	-122.3645155
543	1091	37.72106063	-122.3645131
544	[illegible]	37.72106638	-122.364512
545	[illegible]	37.7210718	-122.3645126
546	[illegible]	37.7210771	-122.3645155
547	1196	37.72108248	-122.3645193
548	1041	37.72108767	-122.3645243
549	970	37.72109245	-122.3645299
550	1042	37.72109722	-122.3645368
551	1079	37.72110167	-122.3645439
552	1151	37.72110597	-122.3645511
553	1174	37.7211099	-122.3645578
554	1043	37.72111388	-122.3645649
555	1004	37.72111819	-122.3645713
556	1025	37.72112229	-122.364578
557	1063	37.72112625	-122.3645845
558	1084	37.72113048	-122.3645916

Pile 281, Pad C10

Sample ID	Gamma Total cps	Latitude	Longitude
559	1064	37.72113433	-122.3645985
560	1057	37.72113852	-122.3646055
561	1047	37.72114266	-122.3646127
562	1040	37.72114663	-122.3646198
563	1030	37.72115086	-122.3646269
564	1043	37.72115455	-122.3646338
565	1056	37.72115769	-122.3646408
566	988	37.72115962	-122.3646477
567	1025	37.72116023	-122.3646552
568	1039	37.72115994	-122.3646622
569	995	37.72115816	-122.3646688
570	1053	37.72115583	-122.3646752
571	1005	37.7211521	-122.3646823
572	978	37.72114664	-122.3646906
573	1006	37.72113976	-122.3646981
574	1008	37.72113281	-122.3647056
575	1209	37.72112582	-122.364713
576	[illegible]	37.72111845	-122.3647203
577	1048	37.72111102	-122.3647274
578	1196	37.72110351	-122.3647346
579	1195	37.7210959	-122.364742
580	1162	37.72108892	-122.3647486
581	1179	37.72108111	-122.3647561
582	1169	37.72107296	-122.3647633
583	1203	37.72106513	-122.3647702
584	[illegible]	37.72105749	-122.3647777
585	[illegible]	**37.72104987**	**-122.3647843**
586	[illegible]	37.72104198	-122.3647916
587	[illegible]	37.72103429	-122.364799
588	[illegible]	37.72102652	-122.3648063
589	[illegible]	37.72101875	-122.3648131
590	[illegible]	**37.72101081**	**-122.36482**
591	[illegible]	37.72100296	-122.3648264
592	[illegible]	37.7209956	-122.364832
593	[illegible]	37.72098824	-122.3648349
594	[illegible]	37.72098084	-122.3648337
595	[illegible]	37.72097336	-122.3648301
596	[illegible]	37.72096654	-122.3648246
597	[illegible]	37.72096021	-122.3648177
598	[illegible]	37.72095386	-122.3648095
599	[illegible]	37.72094772	-122.3648007
600	[illegible]	37.720942	-122.3647921
601	[illegible]	37.72093632	-122.3647828
602	[illegible]	37.72093141	-122.3647733
603	[illegible]	37.7209259	-122.364764
604	[illegible]	37.72092038	-122.3647542
605	1168	37.72091453	-122.3647443
606	1208	37.72090968	-122.3647348
607	[illegible]	37.72090534	-122.3647244
608	1215	37.72090109	-122.3647148
609	[illegible]	37.72089728	-122.3647045
610	[illegible]	37.72089566	-122.3646958
611	[illegible]	37.72089587	-122.3646881
612	[illegible]	37.72089887	-122.3646799
613	[illegible]	37.72090327	-122.3646715
614	[illegible]	37.72090898	-122.3646635
615	[illegible]	**37.7209158**	**-122.3646555**
616	[illegible]	37.7209222	-122.3646481
617	[illegible]	37.72092937	-122.3646408
618	[illegible]	**37.72093625**	**-122.3646343**
619	[illegible]	37.72094327	-122.3646275

ED_006787_00017608-01339

Pile 281, Pad C10

Sample ID	Gamma Total cps	Latitude	Longitude
620	1361	37.72095058	-122.364621
621	1341	37.72095749	-122.3646144
622	1167	37.72096488	-122.3646075
623	1117	37.72097195	-122.3646008
624	1062	37.7209788	-122.3645942
625	1160	37.72098764	-122.3645858
626	1092	37.72099566	-122.3645785
627	1205	37.72100455	-122.3645702
628	1190	37.72101367	-122.3645621
629	1122	37.72102242	-122.3645541
630	1148	37.72103122	-122.3645453
631	1183	37.72104012	-122.364537
632	1109	37.72104888	-122.3645302
633	**1235**	**37.72105762**	**-122.3645255**
634	1313	37.7210674	-122.3645251
635	1181	37.72107607	-122.3645289
636	1113	37.72108448	-122.3645362
637	1087	37.72109238	-122.3645449
638	1079	37.72110002	-122.3645561
639	1055	37.72110744	-122.3645674
640	1015	37.72111339	-122.3645767
641	1092	37.72111958	-122.3645866
642	1154	37.72112577	-122.3645978
643	1122	37.72113182	-122.3646086
644	1209	37.72113753	-122.3646197
645	1159	37.7211425	-122.3646293
646	986	37.72114716	-122.3646416
647	1013	37.72114924	-122.3646527
648	1044	37.7211488	-122.3646634
649	1017	37.72114567	-122.3646732
650	986	37.72113955	-122.3646838
651	892	37.7211322	-122.3646929
652	953	37.72112441	-122.3647021
653	1136	37.72111632	-122.3647107
654	1063	37.7211073	-122.3647191
655	1139	37.72109949	-122.364727
656	1146	37.72109106	-122.364735
657	1118	37.72108232	-122.3647431
658	1216	37.72107379	-122.3647514
659	1134	37.72106496	-122.3647598
660	1171	37.72105668	-122.3647681
661	1379	37.7210483	-122.364776
662	1399	37.72103928	-122.364784
663	1371	37.72103039	-122.3647921
664	1349	37.72102068	-122.3647992
665	1424	37.72101173	-122.3648056
666	1391	37.72100196	-122.3648122
667	1431	37.7209929	-122.364816
668	1415	37.72098441	-122.3648159
669	**1528**	**37.72097579**	**-122.3648126**
670	1411	37.72096832	-122.3648063
671	1412	37.72096016	-122.3647977
672	1367	37.7209528	-122.3647882
673	1393	37.72094587	-122.3647779
674	1392	37.72093944	-122.3647678
675	1423	37.72093292	-122.3647568
676	1411	37.72092598	-122.3647454
677	1376	37.72091958	-122.364734
678	1329	37.72091354	-122.3647231
679	1393	37.72090823	-122.364712
680	1395	37.72090586	-122.3647019

Pile 281, Pad C10

Sample ID	Gamma Total cps	Latitude	Longitude
681	[illegible]	37.72090686	-122.3646918
682	[illegible]	37.72091005	-122.3646816
683	[illegible]	37.72091528	-122.3646713
684	[illegible]	37.72092227	-122.364662
685	[illegible]	37.72092963	-122.3646531
686	[illegible]	37.72093813	-122.3646449
687	[illegible]	37.72094566	-122.3646366
688	[illegible]	37.72095429	-122.3646285
689	1177	37.72096269	-122.3646207
690	1200	37.72097085	-122.3646129
691	1046	37.72097963	-122.3646051
692	1108	37.72098799	-122.3645975
693	1069	37.72099701	-122.364589
694	999	37.72100569	-122.3645806
695	1068	37.72101446	-122.3645731
696	1090	37.72102222	-122.3645651
697	1106	37.72103091	-122.3645576
698	1196	37.72103955	-122.364551
699	1138	37.7210483	-122.3645443
700	1156	37.72105649	-122.3645399
701	[illegible]	37.72106528	-122.3645386
702	1190	37.72107406	-122.3645416
703	1128	37.72108223	-122.3645473
704	1061	37.72108972	-122.3645548
705	1104	37.72109676	-122.3645638
706	1088	37.72110326	-122.364574
707	1068	37.72110976	-122.3645847
708	1147	37.72111609	-122.3645955
709	1124	37.72112234	-122.3646071
710	1110	37.72112855	-122.3646178
711	1077	37.7211347	-122.3646289
712	1034	37.72113938	-122.3646398
713	1028	37.72114171	-122.3646502
714	966	37.72114062	-122.3646603
715	933	37.72113694	-122.3646704
716	961	37.72113011	-122.3646811
717	933	37.72112284	-122.3646905
718	957	37.72111488	-122.3646995
719	1017	37.72110584	-122.3647082
720	1041	37.72109777	-122.3647166
721	1075	37.7210887	-122.3647255
722	1039	37.72108033	-122.3647336
723	1144	37.72107131	-122.3647421
724	1163	37.72106274	-122.3647499
725	[illegible]	37.72105391	-122.3647586
726	[illegible]	37.72104477	-122.3647671
727	[illegible]	37.72103575	-122.3647753
728	[illegible]	37.72102615	-122.364783
729	[illegible]	37.72101694	-122.3647907
730	[illegible]	37.72100844	-122.3647982
731	[illegible]	37.72099855	-122.364804
732	[illegible]	37.72099058	-122.3648061
733	[illegible]	37.7209818	-122.3648043
734	[illegible]	37.72097308	-122.364799
735	[illegible]	37.7209647	-122.364791
736	[illegible]	37.72095675	-122.3647811
737	[illegible]	37.72095013	-122.3647708
738	[illegible]	37.72094288	-122.3647598
739	[illegible]	37.72093649	-122.3647483
740	[illegible]	37.72092977	-122.3647365
741	[illegible]	37.72092339	-122.3647253
742	[illegible]	37.72091824	-122.3647141

Pile 281, Pad C10

Sample ID	Gamma Total cps	Latitude	Longitude
743	[illegible]	37.7209155	-122.3647039
744	[illegible]	37.72091631	-122.3646951
745	[illegible]	37.72092023	-122.3646842
746	[illegible]	37.7209255	-122.3646739
747	[illegible]	37.72093264	-122.3646647
748	[illegible]	37.72094026	-122.3646558
749	[illegible]	37.72094794	-122.3646467
750	[illegible]	37.72095534	-122.3646394
751	1184	37.72096427	-122.3646307
752	1196	37.72097303	-122.364623
753	1160	37.7209813	-122.3646151
754	1071	37.72098959	-122.3646072
755	1085	37.72099878	-122.3645991
756	1009	37.72100725	-122.3645906
757	1041	37.72101572	-122.3645824
758	1112	37.72102373	-122.3645743
759	1180	37.72103168	-122.3645655
760	1153	37.72103974	-122.3645578
761	1126	37.72104842	-122.3645507
762	1109	37.72105672	-122.3645472
763	1182	37.72106523	-122.3645474
764	1167	37.72107415	-122.364551
765	1105	37.72108158	-122.3645573
766	1101	37.72108899	-122.3645657
767	1088	37.72109602	-122.364576
768	1103	37.72110248	-122.3645867
769	1078	37.7211087	-122.3645979
770	1126	37.72111495	-122.364609
771	1108	37.721121	-122.3646202
772	1066	37.72112651	-122.3646309
773	1044	37.72113138	-122.3646424
774	971	37.72113176	-122.3646525
775	1025	37.72112957	-122.3646626
776	980	37.72112406	-122.3646739
777	951	37.72111747	-122.3646845
778	980	37.72110996	-122.3646939
779	996	37.72110134	-122.3647029
780	1039	37.72109273	-122.3647114
781	972	37.72108371	-122.3647198
782	968	37.72107455	-122.3647281
783	1144	37.72106544	-122.3647359
784	1187	37.72105646	-122.364744
785	[illegible]	37.72104751	-122.3647521
786	[illegible]	37.72103809	-122.3647604
787	[illegible]	37.72102851	-122.3647691
788	[illegible]	37.72101935	-122.3647771
789	[illegible]	**37.72100999**	**-122.3647855**
790	[illegible]	37.72100142	-122.3647918
791	[illegible]	37.72099275	-122.3647941
792	[illegible]	37.72098429	-122.3647918
793	[illegible]	37.72097519	-122.364786
794	[illegible]	37.72096673	-122.3647774
795	[illegible]	37.72095908	-122.3647677
796	[illegible]	37.72095185	-122.364757
797	[illegible]	37.72094494	-122.3647454
798	[illegible]	37.72093877	-122.3647336
799	[illegible]	37.72093237	-122.3647215
800	[illegible]	**37.7209283**	**-122.3647114**
801	[illegible]	37.72092749	-122.3646999
802	[illegible]	37.72093023	-122.3646891
803	[illegible]	37.72093498	-122.3646782

Pile 281, Pad C10

Sample ID	Gamma Total cps	Latitude	Longitude
804	[illegible]	37.72094154	-122.3646682
805	[illegible]	37.72094893	-122.3646589
806	[illegible]	37.72095746	-122.3646498
807	1171	37.72096602	-122.3646413
808	1174	37.72097444	-122.3646333
809	1145	37.72098371	-122.3646247
810	1110	37.72099238	-122.3646164
811	1068	37.72100196	-122.3646078
812	1012	37.72101039	-122.3645996
813	1045	37.7210198	-122.364591
814	[illegible]	37.72102902	-122.3645826
815	[illegible]	37.72103775	-122.3645753
816	1166	37.72104617	-122.3645681
817	1098	37.72105551	-122.3645635
818	1050	37.72106364	-122.3645632
819	1065	37.7210718	-122.3645669
820	999	37.72107966	-122.3645727
821	1012	37.72108737	-122.3645818
822	1074	37.72109489	-122.3645921
823	1042	37.72110177	-122.364603
824	1083	37.72110855	-122.3646144
825	1070	37.72111488	-122.3646258
826	1155	37.72111983	-122.3646364
827	935	37.7211221	-122.364648
828	1028	37.72112065	-122.3646584
829	1006	37.7211164	-122.3646696
830	980	37.72110993	-122.3646798
831	991	37.72110222	-122.3646901
832	1020	37.72109406	-122.3646994
833	1002	37.72108481	-122.3647078
834	1012	37.72107582	-122.3647162
835	1024	37.72106642	-122.3647244
836	[illegible]	37.72105694	-122.3647326
837	[illegible]	37.72104688	-122.3647408
838	[illegible]	37.72103789	-122.3647494
839	[illegible]	37.72102852	-122.3647579
840	[illegible]	37.72102038	-122.3647658
841	[illegible]	37.7210104	-122.3647756
842	[illegible]	37.72100118	-122.3647822
843	[illegible]	37.72099358	-122.3647839
844	[illegible]	37.72098535	-122.364781
845	[illegible]	37.72097617	-122.3647745
846	**1767**	**37.72096793**	**-122.364765**
847	[illegible]	37.72096005	-122.3647544
848	[illegible]	37.72095311	-122.3647431
849	[illegible]	37.72094576	-122.364731
850	[illegible]	37.72094037	-122.36472
851	[illegible]	37.72093771	-122.3647093
852	[illegible]	37.72093827	-122.3646991
853	[illegible]	37.720942	-122.3646875
854	[illegible]	37.72094777	-122.3646772
855	[illegible]	37.72095484	-122.3646671
856	[illegible]	37.72096241	-122.3646581
857	1190	37.72097101	-122.3646486
858	1125	37.72097955	-122.3646399
859	1208	37.72098843	-122.3646316
860	[illegible]	37.72099777	-122.3646229
861	1138	37.72100735	-122.3646143
862	1024	37.72101563	-122.3646059
863	1082	37.721025	-122.3645968
864	1117	37.72103344	-122.3645884
865	[illegible]	37.72104249	-122.3645803

Pile 281, Pad C10

Sample ID	Gamma Total cps	Latitude	Longitude
866	1145	37.72105092	-122.3645754
867	966	37.72105908	-122.364575
868	1005	37.72106769	-122.364578
869	926	37.7210761	-122.3645844
870	908	37.72108387	-122.364593
871	977	37.72109145	-122.3646034
872	1070	37.72109851	-122.3646145
873	1043	37.72110503	-122.3646261
874	1082	37.72111087	-122.3646375
875	1043	37.7211129	-122.3646475
876	978	37.72111148	-122.3646573
877	970	37.72110643	-122.3646688
878	1000	37.72109995	-122.3646789
879	1034	37.72109158	-122.3646891
880	981	37.72108287	-122.3646977
881	1034	37.72107424	-122.3647061
882	1041	37.72106482	-122.3647151
883	1192	37.72105576	-122.3647234
884	1207	37.72104548	-122.3647317
885	1273	37.72103585	-122.3647395
886	1272	37.72102658	-122.3647474
887	1341	37.72101685	-122.3647555
888	1295	37.72100718	-122.3647629
889	1341	37.72099785	-122.3647666
890	1301	37.72098963	-122.3647663
891	1246	37.72098132	-122.3647612
892	1231	37.72097375	-122.3647527
893	1213	37.72096507	-122.3647429
894	1207	37.72095816	-122.3647317
895	1175	37.72095232	-122.3647205
896	1211	37.72094964	-122.3647095
897	1174	37.72094999	-122.3646997
898	1232	37.72095347	-122.3646889
899	1213	37.72095914	-122.3646789
900	1233	37.72096687	-122.3646688
901	1215	37.72097508	-122.3646593
902	1136	37.72098365	-122.3646499
903	1059	37.72099201	-122.3646413
904	1212	37.72100102	-122.3646326
905	1231	37.72100984	-122.3646238
906	1102	37.72101865	-122.3646157
907	1199	37.72102722	-122.3646069
908	1050	37.72103602	-122.3645984
909	1087	37.72104468	-122.3645914
910	991	37.72105279	-122.3645884
911	967	37.72106164	-122.3645889
912	932	37.72106947	-122.3645942
913	951	37.72107784	-122.3646011
914	1024	37.72108598	-122.3646104
915	1077	37.72109299	-122.3646208
916	1111	37.72109934	-122.3646325
917	1079	37.72110287	-122.364643
918	1043	37.72110277	-122.364652
919	1062	37.72109929	-122.3646627
920	1060	37.7210925	-122.364673
921	1054	37.72108488	-122.3646834
922	1086	37.72107639	-122.3646927
923	1094	37.72106742	-122.3647014
924	1076	37.72105841	-122.3647096
925	1213	37.72104905	-122.3647181
926	1197	37.72103928	-122.3647262
927	1214	37.72102998	-122.3647344

Pile 281, Pad C10

Sample ID	Gamma Total cps	Latitude	Longitude
928	[illegible]	37.72102048	-122.3647427
929	[illegible]	37.72101111	-122.3647501
930	[illegible]	37.72100181	-122.3647534
931	[illegible]	37.72099316	-122.3647528
932	[illegible]	37.72098501	-122.3647471
933	[illegible]	37.72097612	-122.3647397
934	[illegible]	37.72096892	-122.3647298
935	[illegible]	37.72096264	-122.3647192
936	[illegible]	37.72096119	-122.3647094
937	[illegible]	37.72096202	-122.3646998
938	1213	37.72096593	-122.3646891
939	1169	37.72097205	-122.3646783
940	[illegible]	37.72097962	-122.3646681
941	1169	37.72098807	-122.3646589
942	1015	37.72099646	-122.3646498
943	1092	37.72100543	-122.3646409
944	1104	37.72101403	-122.364632
945	1182	37.72102223	-122.3646239
946	[illegible]	**37.72103144**	**-122.3646143**
947	1082	37.72104008	-122.3646065
948	1101	37.72104883	-122.3646024
949	956	37.72105778	-122.3646025
950	977	37.7210656	-122.3646055
951	920	37.72107419	-122.3646119
952	1028	37.72108196	-122.3646208
953	1060	37.72108875	-122.3646306
954	1109	37.72109351	-122.3646416
955	1074	37.72109439	-122.3646515
956	1105	37.72109219	-122.3646607
957	1112	37.7210867	-122.3646703
958	1086	37.7210788	-122.3646805
959	1121	37.72107042	-122.3646892
960	1077	37.72106134	-122.3646972
961	1147	37.72105253	-122.3647051
962	1210	37.72104295	-122.3647137
963	1174	37.72103331	-122.3647218
964	1206	37.72102423	-122.3647299
965	[illegible]	37.72101472	-122.3647375
966	[illegible]	37.72100479	-122.3647413
967	[illegible]	37.72099745	-122.3647408
968	[illegible]	37.72098977	-122.3647366
969	[illegible]	37.7209812	-122.3647292
970	[illegible]	37.72097547	-122.3647205
971	[illegible]	37.72097344	-122.364712
972	1170	37.7209741	-122.3647013
973	1131	37.72097735	-122.3646906
974	[illegible]	37.7209834	-122.3646792
975	1195	37.72099044	-122.3646688
976	1063	37.72099871	-122.3646592
977	1096	37.72100669	-122.36465
978	1026	37.72101535	-122.3646407
979	999	37.72102367	-122.364632
980	1157	37.72103275	-122.3646234
981	975	37.72104155	-122.3646168
982	964	37.72105017	-122.3646137
983	1008	37.7210584	-122.3646145
984	1013	37.72106668	-122.3646184
985	1098	37.72107528	-122.3646258
986	1169	37.72108202	-122.3646347
987	1151	37.72108457	-122.3646425
988	[illegible]	37.72108423	-122.3646504
989	1193	37.72108051	-122.3646607

Pile 281, Pad C10

Sample ID	Gamma Total cps	Latitude	Longitude
990	1180	37.72107319	-122.3646708
991	1093	37.72106546	-122.3646804
992	1099	37.72105644	-122.3646895
993	1185	37.72104784	-122.364698
994	1293	37.72103812	-122.364707
995	1192	37.72102906	-122.3647155
996	1264	37.72101957	-122.364724
997	1432	37.72101032	-122.3647294
998	1411	37.72100322	-122.3647297
999	1413	37.7209953	-122.3647268
1000	1519	37.72098941	-122.3647204
1001	1334	37.72098705	-122.3647141
1002	1367	37.72098704	-122.3647051
1003	1430	37.72098985	-122.3646943
1004	1370	37.72099525	-122.3646833
1005	1234	37.72100205	-122.3646732
1006	1079	37.72101045	-122.3646633
1007	1030	37.721019	-122.3646545
1008	1034	37.7210273	-122.3646455
1009	965	37.72103627	-122.364637
1010	955	37.72104477	-122.3646309
1011	1003	37.72105276	-122.3646289
1012	1197	37.72106144	-122.3646306
1013	**1431**	**37.72106661**	**-122.364635**
1014	1311	37.7210684	-122.3646409
1015	1334	37.72106863	-122.3646497
1016	1340	37.72106534	-122.3646598
1017	1288	37.72105935	-122.3646703
1018	1159	37.72105177	-122.3646805
1019	1238	37.72104317	-122.3646897
1020	1431	37.72103439	-122.3646988
1021	1340	37.72102506	-122.364708
1022	1344	37.72101593	-122.3647152
1023	1343	37.72100826	-122.3647173
1024	1541	37.72100217	-122.364716
1025	1539	37.72099983	-122.3647129
1026	1793	37.72099914	-122.3647091
1027	**1818**	**37.72099982**	**-122.3647003**
1028	1776	37.72100316	-122.3646901
1029	1736	37.72100939	-122.36468
1030	1547	37.72101684	-122.3646699
1031	1103	37.72102448	-122.3646603
1032	1126	37.72103261	-122.3646511
1033	1086	37.72103996	-122.3646447
1034	1168	37.72104703	-122.3646423
1035	1340	37.72104955	-122.3646437
1036	1267	37.72105125	-122.3646467
1037	1235	37.72105208	-122.3646526
1038	1239	37.7210511	-122.3646619
1039	1233	37.7210472	-122.3646712
1040	1293	37.72103958	-122.3646815
1041	1341	37.72103166	-122.364691
1042	1512	37.72102253	-122.3646985
1043	1712	37.72101676	-122.3647002
1044	1718	37.72101401	-122.3646983
1045	1731	37.72101271	-122.364695
1046	1743	37.72101296	-122.364692
1047	1734	37.72101474	-122.3646863
1048	1731	37.72101999	-122.3646775
1049	1542	37.72102809	-122.3646681
1050	1187	37.72103352	-122.364659

Pile 281, Pad C10

Sample ID	Gamma Total cps	Latitude	Longitude
1051	1144	37.72103752	-122.3646473
1052	1006	37.72104281	-122.3646373
1053	996	37.72104696	-122.364634
1054	1098	37.72104995	-122.3646347
1055	1233	37.72105197	-122.3646366
1056	1210	37.72105289	-122.3646409
1057	1236	37.72105273	-122.364646
1058	1334	37.72104894	-122.3646551
1059	**1315**	**37.72104317**	**-122.3646653**
1060	1214	37.72103534	-122.3646753
1061	1153	37.72102704	-122.3646839
1062	1133	37.72101743	-122.3646933
1063	1301	37.7210081	-122.3647019
1064	1744	37.72099883	-122.3647106
1065	1673	37.7209901	-122.364719
1066	1511	37.72098054	-122.3647275
1067	1579	37.72097137	-122.3647362
1068	1717	37.72096265	-122.3647451
1069	1775	37.72095384	-122.3647536
1070	1647	37.72094467	-122.3647605
1071	1416	37.72093583	-122.364765
1072	1342	37.72092582	-122.3647658
1073	1112	37.72091751	-122.3647634
1074	1126	37.7209098	-122.3647564
1075	1145	37.72090238	-122.3647465
1076	1049	37.72089523	-122.3647354
1077	1013	37.72088815	-122.3647248
1078	970	37.72088082	-122.3647145
1079	896	37.72087556	-122.3647036
1080	889	37.72087345	-122.3646919
1081	952	37.72087329	-122.3646798
1082	1053	37.72087547	-122.3646668
1083	1204	37.72087959	-122.3646546
1084	1246	37.72088495	-122.3646441
1085	1519	37.72089247	-122.3646335
1086	1538	37.72089048	-122.3646363
1087	**1514**	**37.72088165**	**-122.3646444**
1088	1310	37.72087055	-122.3646532
1089	1127	37.7208587	-122.3646616
1090	928	37.7208473	-122.3646701
1091	917	37.72083953	-122.3646777
1092	889	37.72084846	-122.3646682
1093	926	37.72085748	-122.3646581
1094	1042	37.72086624	-122.3646482
1095	1234	37.7208723	-122.3646414
1096	1262	37.72086436	-122.3646492
1097	1148	37.72085621	-122.3646541
1098	918	37.72084754	-122.3646602
1099	880	37.7208517	-122.3646561
1100	949	37.72086301	-122.3646488
1101	1231	37.72087417	-122.3646409
1102	1241	37.72087107	-122.364643
1103	1263	37.72086029	-122.3646554
1104	951	37.7208512	-122.3646647
1105	881	37.72083919	-122.3646757
1106	890	37.72084551	-122.36467
1107	931	37.7208561	-122.3646626
1108	958	37.72086764	-122.364657
1109	1214	37.72087852	-122.3646507
1110	1325	37.72088718	-122.3646452
1111	1397	37.72087805	-122.3646511

Pile 281, Pad C10

Sample ID	Gamma Total cps	Latitude	Longitude
1112	1211	37.72086526	-122.3646602
1113	894	37.72085412	-122.3646675
1114	945	37.72084203	-122.3646769
1115	954	37.72084676	-122.3646731
1116	924	37.72085557	-122.3646664
1117	884	37.72086446	-122.3646606
1118	1154	37.72087303	-122.3646541
1119	1174	37.72088081	-122.3646479
1120	1212	37.72088921	-122.3646408
1121	1201	37.72087895	-122.3646503
1122	1203	37.72086623	-122.3646641
1123	924	37.72085413	-122.364675
1124	1031	37.72084238	-122.3646861
1125	1021	37.72084846	-122.3646806
1126	975	37.72085718	-122.3646732
1127	945	37.72086652	-122.3646691
1128	1136	37.72087687	-122.3646668
1129	1192	37.72088786	-122.3646659
1130	1241	37.7208982	-122.3646663
1131	1201	37.72090796	-122.3646668
1132	1212	37.72091865	-122.3646683
1133	1191	37.72092926	-122.3646696
1134	1173	37.72093996	-122.3646711
1135	1174	37.72095199	-122.364673
1136	1201	37.72096481	-122.3646751
1137	1184	37.72097779	-122.364676
1138	1186	37.72099001	-122.3646767
1139	1202	37.72100267	-122.3646769
1140	1194	37.72101569	-122.3646774
1141	1193	37.72102847	-122.364678
1142	1190	37.72104133	-122.3646778
1143	1178	37.72105389	-122.3646773
1144	1174	37.72106685	-122.364677
1145	1157	37.72107904	-122.364676
1146	1089	37.72109257	-122.3646751
1147	970	37.72110533	-122.3646743
1148	986	37.72111852	-122.3646734
1149	989	37.72113076	-122.3646725
1150	952	37.72114346	-122.3646706
1151	1003	37.72115514	-122.3646663
1152	1055	37.72116624	-122.3646589
1153	988	37.72117759	-122.3646529
1154	963	37.72118791	-122.3646523
1155	929	37.72119389	-122.3646558
1156	983	37.72119692	-122.3646627
1157	921	37.7211968	-122.3646718
1158	989	37.72119308	-122.3646825
1159	985	37.72118592	-122.3646935
1160	904	37.72117972	-122.364701
1161	954	37.72118876	-122.3646909
1162	941	37.7211987	-122.3646826
1163	968	37.72120984	-122.3646755
1164	982	37.72122092	-122.3646684
1165	962	37.72121204	-122.3646739
1166	931	37.72120331	-122.3646818
1167	960	37.7211956	-122.3646913
1168	947	37.72118785	-122.3647015
1169	922	37.72118302	-122.3647075
1170	910	37.72119126	-122.3646985
1171	940	37.721201	-122.3646906
1172	941	37.72121271	-122.3646812
1173	971	37.72122302	-122.3646725

Pile 281, Pad C10

Sample ID	Gamma Total cps	Latitude	Longitude
1174	1000	37.7212159	-122.3646785
1175	944	37.72120838	-122.3646858
1176	948	37.72120055	-122.3646928
1177	925	37.72119274	-122.3646985
1178	933	37.72118465	-122.3647032
1179	893	37.72117674	-122.3647075
1180	958	37.72117295	-122.3647097
1181	909	37.7211813	-122.3647039
1182	940	37.72118778	-122.3646969
1183	924	37.72119358	-122.3646893
1184	954	37.7212017	-122.3646836
1185	967	37.72120726	-122.3646806
1186	941	37.72119831	-122.3646851
1187	974	37.7211884	-122.3646902
1188	932	37.72117801	-122.3646958
1189	990	37.72118292	-122.3646929
1190	929	37.72119424	-122.364683
1191	927	37.7212041	-122.3646737
1192	929	37.7212161	-122.3646631
1193	931	37.72121147	-122.364667
1194	957	37.72120298	-122.3646744
1195	963	37.72119478	-122.3646801
1196	988	37.72118494	-122.3646847
1197	1030	37.7211752	-122.3646877
1198	1071	37.72116555	-122.3646892
1199	1032	37.72115593	-122.3646897
1200	965	37.72114607	-122.3646904
1201	899	37.7211356	-122.3646907
1202	901	37.72112539	-122.3646904
1203	966	37.72111601	-122.3646905
1204	1000	37.72110598	-122.3646897
1205	1053	37.72109645	-122.3646895
1206	1056	37.7210868	-122.3646885
1207	1086	37.72107788	-122.364686
1208	1141	37.72106938	-122.3646819
1209	1177	37.7210627	-122.3646757
1210	[illegible]	37.72105713	-122.3646676
1211	[illegible]	37.72105342	-122.3646587
1212	[illegible]	37.72105208	-122.3646482
1213	1156	37.72105215	-122.3646377
1214	993	37.72105332	-122.3646264
1215	934	37.72105537	-122.3646149
1216	965	37.72105849	-122.3646034
1217	939	37.72106048	-122.364592
1218	946	37.72106303	-122.3645807
1219	965	37.7210661	-122.3645702
1220	1103	37.72106951	-122.3645592
1221	1176	37.72107274	-122.3645488
1222	[illegible]	37.72107637	-122.3645381
1223	1189	37.72107985	-122.3645274
1224	[illegible]	37.72108411	-122.3645167
1225	1120	37.72108807	-122.3645061
1226	1202	37.72109153	-122.3644948
1227	1179	37.72109162	-122.364486
1228	1202	37.72108944	-122.3644794
1229	[illegible]	37.72108584	-122.3644749
1230	[illegible]	37.72108053	-122.3644728
1231	1197	37.72107252	-122.3644717
1232	1208	37.72106461	-122.3644738
1233	1115	37.7210563	-122.364478
1234	1153	37.72104746	-122.364483
1235	1165	37.72104106	-122.3644873

Pile 281, Pad C10

Sample ID	Gamma Total cps	Latitude	Longitude
1236	1149	37.72105021	-122.3644804
1237	1136	37.72105845	-122.3644745
1238	1113	37.72106742	-122.3644656
1239	1164	37.72107573	-122.3644591
1240	1173	37.72108575	-122.3644517
1241	1164	37.72108524	-122.3644517
1242	1193	37.72107381	-122.3644611
1243	1213	37.72106343	-122.3644696
1244	1106	37.72106258	-122.3644702
1245	1182	37.72107206	-122.3644581
1246	1176	37.72108099	-122.3644463
1247	1154	37.7210808	-122.3644463
1248	1161	37.72107679	-122.3644504
1249	1155	37.72107028	-122.3644572
1250	1158	37.72106273	-122.3644642
1251	1113	37.72105421	-122.364471
1252	1101	37.72104726	-122.3644768
1253	1129	37.72103996	-122.3644833
1254	1156	37.72103313	-122.3644906
1255	1188	37.72102739	-122.3644974
1256	1205	37.72102403	-122.3645077
1257	1207	37.72102283	-122.3645188
1258	1179	37.72102321	-122.3645303
1259	1166	37.72102442	-122.3645417
1260	1112	37.72102734	-122.364553
1261	1157	37.72103087	-122.3645634
1262	[illegible]	37.72103529	-122.3645741
1263	1198	37.72104088	-122.3645844
1264	1099	37.72104709	-122.3645941
1265	1003	37.72105267	-122.3646032
1266	1001	37.72105919	-122.3646124
1267	1001	37.72106584	-122.3646209
1268	[illegible]	37.72107297	-122.3646293
1269	[illegible]	37.72107977	-122.3646377
1270	1182	37.7210868	-122.3646458
1271	1106	37.72109413	-122.3646536
1272	1076	37.72110172	-122.3646608
1273	977	37.72110963	-122.3646666
1274	979	37.72111797	-122.3646709
1275	993	37.72112694	-122.3646738
1276	936	37.7211368	-122.364675
1277	1017	37.72114537	-122.3646745
1278	984	37.72115358	-122.3646719
1279	1066	37.72116164	-122.3646664
1280	1030	37.72117019	-122.3646604
1281	989	37.72117827	-122.364656
1282	957	37.72118618	-122.3646556
1283	953	37.72119307	-122.3646574
1284	913	37.72119617	-122.3646604
1285	923	37.72119762	-122.3646646
1286	937	37.72119763	-122.36467
1287	949	37.72119616	-122.3646777
1288	980	37.72119186	-122.3646867
1289	980	37.72118679	-122.3646951
1290	930	37.72118065	-122.3647043
1291	880	37.72117462	-122.3647118
1292	915	37.72116772	-122.3647176
1293	951	37.72116006	-122.3647214
1294	881	37.72115107	-122.3647236
1295	909	37.72114167	-122.3647239
1296	1140	37.72113265	-122.3647226
1297	[illegible]	37.72112385	-122.3647208

Pile 281, Pad C10

Sample ID	Gamma Total cps	Latitude	Longitude
1298	1072	37.72111448	-122.3647184
1299	1026	37.72110546	-122.364716
1300	1032	37.72109632	-122.3647139
1301	996	37.72108714	-122.3647123
1302	1064	37.72107802	-122.3647105
1303	1048	37.72106928	-122.3647104
1304	1078	37.72105945	-122.3647116
1305	1187	37.7210504	-122.3647137
1306	1132	37.72104136	-122.3647176
1307	1194	37.72103291	-122.3647217
1308	1172	37.7210242	-122.364727
1309	[illegible]	37.72101599	-122.3647331
1310	[illegible]	37.72100819	-122.3647392
1311	[illegible]	37.7210005	-122.3647463
1312	[illegible]	37.72099302	-122.3647536
1313	[illegible]	37.72098565	-122.3647612
1314	[illegible]	37.72097888	-122.3647695
1315	[illegible]	37.7209721	-122.3647777
1316	[illegible]	37.72096569	-122.3647862
1317	[illegible]	37.72095946	-122.3647949
1318	[illegible]	37.72095435	-122.3648039
1319	1168	37.72095005	-122.3648131
1320	1047	37.72094763	-122.3648235
1321	954	37.72094643	-122.3648345
1322	961	37.72094692	-122.3648447
1323	943	37.72094894	-122.3648547
1324	978	37.72095178	-122.3648643
1325	995	37.72095576	-122.3648736
1326	940	37.72095979	-122.3648794
1327	866	37.72096511	-122.3648811
1328	867	37.72097159	-122.364882
1329	861	37.72097883	-122.3648803
1330	935	37.72098655	-122.3648774
1331	1002	37.72099051	-122.3648756
1332	947	37.72097966	-122.3648819
1333	876	37.7209677	-122.3648925
1334	840	37.72096343	-122.3648959
1335	847	37.72097381	-122.3648876
1336	909	37.72098482	-122.3648814
1337	976	37.7209963	-122.3648749
1338	1118	37.72100284	-122.3648699
1339	1142	37.72099576	-122.3648754
1340	1031	37.72098855	-122.3648836
1341	920	37.72098266	-122.3648922
1342	879	37.7209749	-122.3649009
1343	879	37.72096834	-122.3649071
1344	904	37.72096914	-122.3649062
1345	868	37.72098059	-122.364897
1346	898	37.72099143	-122.3648886
1347	941	37.72099102	-122.3648893
1348	923	37.72098331	-122.3648957
1349	869	37.72097288	-122.3649055
1350	908	37.72097551	-122.364903
1351	889	37.72098347	-122.3648946
1352	934	37.72098994	-122.3648837
1353	971	37.7209933	-122.3648718
1354	1169	37.72099424	-122.3648593
1355	[illegible]	37.72099333	-122.3648459
1356	[illegible]	37.72099067	-122.3648332
1357	[illegible]	37.72098606	-122.36482
1358	[illegible]	37.72098083	-122.3648088
1359	[illegible]	37.72097376	-122.364799

Pile 281, Pad C10

Sample ID	Gamma Total cps	Latitude	Longitude
1360	1574	37.72096508	-122.36479
1361	1416	37.72095573	-122.3647827
1362	1313	37.7209459	-122.3647769
1363	**1344**	**37.72093568**	**-122.3647732**
1364	1200	37.72092497	-122.3647702
1365	1076	37.72091417	-122.3647688
1366	1130	37.72090269	-122.3647683
	1815	**Maximum**	
	192.10	**Std Dev**	
	1165.15	**Average**	
	1215	**3 σ Investigation Level**	

Investigation Level Exceeded

Biased samples were collected at locations identified by **BOLD**

EXCAVATED SOIL UNIT 284

Pile 284, Pad C09

Sample ID	Gamma Total cps	Latitude	Longitude
1	1144	37.72101464	-122.3649842
2	1200	37.7210248	-122.3649924
3	1216	37.72102486	-122.3649924
4	1243	37.72102483	-122.3649923
5	1239	37.72102241	-122.364989
6	1169	37.72101952	-122.3649849
7	1136	37.72101547	-122.364979
8	1166	37.7210099	-122.3649706
9	1196	37.72100478	-122.3649622
10	1211	37.72100262	-122.3649547
11	1243	37.72100167	-122.3649474
12	1219	37.72100287	-122.3649408
13	1241	37.72100556	-122.3649327
14	1229	37.72100877	-122.3649249
15	1235	37.72101364	-122.3649173
16	1244	37.72101884	-122.3649105
17	1239	37.72102448	-122.3649042
18	1228	37.72103035	-122.3648978
19	1232	37.72103665	-122.3648914
20	1243	37.72104508	-122.3648833
21	1211	37.72105355	-122.3648752
22	1180	37.7210618	-122.3648679
23	1167	37.7210696	-122.3648604
24	1186	37.72107725	-122.3648532
25	1166	37.7210848	-122.3648466
26	1155	37.72109222	-122.3648398
27	1188	37.72109947	-122.3648331
28	1161	37.72110703	-122.3648264
29	1178	37.72111425	-122.3648198
30	1133	37.72112197	-122.3648129
31	1169	37.72112896	-122.3648063
32	1078	37.72113579	-122.3647995
33	1048	37.72114313	-122.3647933
34	996	37.72115041	-122.3647867
35	999	37.72115741	-122.3647803
36	958	37.72116456	-122.3647738
37	906	37.72117201	-122.3647672
38	879	37.72117901	-122.3647605
39	909	37.72118568	-122.3647543
40	909	37.72119258	-122.3647476
41	952	37.72119936	-122.3647408
42	886	37.72120555	-122.3647346
43	896	37.72121145	-122.3647289
44	874	37.7212163	-122.3647256
45	886	37.72122098	-122.3647238
46	843	37.72122577	-122.3647237
47	829	37.72123045	-122.3647248
48	856	37.72123596	-122.3647271
49	906	37.72124101	-122.3647308
50	900	37.72124587	-122.3647365
51	917	37.72125077	-122.3647429
52	946	37.72125558	-122.36475
53	954	37.72126013	-122.3647576
54	938	37.72126487	-122.3647652
55	1039	37.72126965	-122.3647728
56	1156	37.72127423	-122.3647805
57	1065	37.72127885	-122.3647879
58	1123	37.72128341	-122.3647958
59	1218	37.72128788	-122.3648035
60	1254	37.72129243	-122.3648108
61	1251	37.72129706	-122.3648181
62	1227	37.72130152	-122.3648258

Pile 284, Pad C09

Sample ID	Gamma Total cps	Latitude	Longitude
63	1246	37.72130663	-122.3648338
64	1190	37.72131118	-122.3648411
65	1316	37.72131584	-122.3648492
66	1357	37.72132005	-122.3648571
67	1325	37.72132519	-122.3648645
68	1316	37.72132948	-122.3648723
69	1349	37.72133419	-122.3648806
70	1359	37.7213388	-122.3648883
71	1493	37.72134367	-122.3648961
72	1714	37.72134871	-122.3649042
73	1818	37.72135291	-122.364912
74	1731	37.72135627	-122.3649189
75	**1862**	**37.72135771**	**-122.3649256**
76	1732	37.72135707	-122.3649321
77	1655	37.72135546	-122.3649398
78	1751	37.72135176	-122.3649473
79	1773	37.72134745	-122.3649547
80	1704	37.72134291	-122.3649615
81	1547	37.72133785	-122.3649686
82	1395	37.72133197	-122.3649749
83	1313	37.72132577	-122.3649812
84	1351	37.72132002	-122.3649872
85	1395	37.72131378	-122.3649936
86	1373	37.72130807	-122.3650052
87	1132	37.72130184	-122.3650108
88	**1448**	**37.72129524**	**-122.3650167**
89	1105	37.72128677	-122.3650231
90	1015	37.72127832	-122.365031
91	900	37.72127072	-122.3650388
92	957	37.72126318	-122.3650446
93	1024	37.72125526	-122.3650507
94	1028	37.72124701	-122.365059
95	1042	37.7212391	-122.3650664
96	1128	37.72123209	-122.3650745
97	1036	37.72122365	-122.3650815
98	1092	37.72121662	-122.3650906
99	1159	37.72120875	-122.3650985
100	1120	37.72120002	-122.3651051
101	1044	37.72119236	-122.3651127
102	1064	37.72118428	-122.3651196
103	984	37.72117509	-122.3651273
104	1126	37.72116708	-122.3651354
105	1178	37.72115816	-122.3651423
106	1225	37.72114999	-122.3651483
107	1113	37.72114258	-122.3651512
108	1231	37.72113394	-122.365152
109	1231	37.72112729	-122.3651501
110	1236	37.72112026	-122.3651458
111	1274	37.72111299	-122.3651392
112	1327	37.72110605	-122.3651306
113	1311	37.72109974	-122.3651216
114	1028	37.72109403	-122.3651119
115	1011	37.72108764	-122.3651028
116	1081	37.72108303	-122.3650932
117	1019	37.72107683	-122.3650842
118	981	37.72107047	-122.365075
119	919	37.72106408	-122.3650651
120	1103	37.72105742	-122.3650549
121	1120	37.7210531	-122.3650472
122	1058	37.72104767	-122.365039
123	1088	37.72104321	-122.3650309

Pile 284, Pad C09

Sample ID	Gamma Total cps	Latitude	Longitude
124	1077	37.72103828	-122.3650222
125	1243	37.72103303	-122.3650139
126	1270	37.72102842	-122.3650044
127	1185	37.72102323	-122.3649961
128	1184	37.72101867	-122.3649873
129	1138	37.72101355	-122.3649776
130	1227	37.72101124	-122.3649701
131	1135	37.72100899	-122.3649618
132	1273	37.72100946	-122.364954
133	1282	37.72101067	-122.3649457
134	1355	37.72101301	-122.3649378
135	1316	37.7210166	-122.3649298
136	1340	37.72102296	-122.3649215
137	1323	37.72102915	-122.3649147
138	1271	37.72103549	-122.3649084
139	1257	37.7210428	-122.3649011
140	1216	37.72104877	-122.3648947
141	1230	37.72105575	-122.3648886
142	1178	37.7210624	-122.3648827
143	1194	37.72106928	-122.3648768
144	1219	37.72107646	-122.3648707
145	1199	37.72108334	-122.364865
146	1188	37.72108962	-122.3648588
147	1164	37.72109704	-122.3648522
148	1221	37.72110428	-122.3648463
149	1177	37.72111105	-122.3648397
150	1184	37.72111839	-122.3648337
151	1144	37.7211255	-122.3648282
152	1216	37.72113187	-122.3648222
153	1185	37.72113881	-122.3648162
154	1073	37.72114627	-122.3648105
155	994	37.72115346	-122.3648049
156	990	37.72115992	-122.3647977
157	913	37.72116686	-122.3647913
158	866	37.72117424	-122.364785
159	875	37.7211809	-122.3647783
160	960	37.7211877	-122.3647713
161	876	37.72119527	-122.3647648
162	941	37.72120274	-122.3647594
163	928	37.72120946	-122.3647535
164	873	37.72121525	-122.3647483
165	870	37.72122177	-122.3647442
166	862	37.7212268	-122.3647434
167	859	37.72123315	-122.3647458
168	871	37.72123948	-122.3647496
169	931	37.72124493	-122.3647556
170	942	37.72125073	-122.3647631
171	976	37.72125633	-122.3647705
172	942	37.72126205	-122.3647793
173	1020	37.72126726	-122.3647876
174	1066	37.72127288	-122.3647945
175	1053	37.72127707	-122.3648024
176	1099	37.72128206	-122.3648101
177	1143	37.7212873	-122.3648179
178	1240	37.72129163	-122.3648263
179	1223	37.7212971	-122.3648355
180	1241	37.72130215	-122.3648443
181	1242	37.7213074	-122.3648522
182	1355	37.72131218	-122.3648611
183	1340	37.72131813	-122.3648692
184	1340	37.72132331	-122.3648783
185	1427	37.72132816	-122.3648866

Pile 284, Pad C09

Sample ID	Gamma Total cps	Latitude	Longitude
186	1237	37.7213338	-122.3648954
187	1238	37.72133945	-122.3649038
188	1211	37.72134463	-122.3649131
189	1255	37.72134831	-122.3649212
190	1218	37.72134974	-122.3649289
191	1195	37.7213491	-122.3649374
192	1243	37.72134648	-122.364945
193	1238	37.72134244	-122.3649525
194	1211	37.721338	-122.3649598
195	1196	37.72133204	-122.3649673
196	1238	37.72132594	-122.3649744
197	1189	37.72131853	-122.3649802
198	1194	37.72131232	-122.3649869
199	1234	37.72130588	-122.3649938
200	1229	37.72129949	-122.3650006
201	1236	37.72129225	-122.3650072
202	1063	37.72128544	-122.3650148
203	1032	37.721279	-122.3650211
204	973	37.7212723	-122.3650277
205	960	37.72126605	-122.3650333
206	980	37.72126038	-122.3650382
207	1014	37.72125316	-122.365045
208	1024	37.72124565	-122.3650501
209	998	37.72123891	-122.3650564
210	1046	37.72123229	-122.3650632
211	1056	37.72122553	-122.3650699
212	1057	37.72121736	-122.3650755
213	1123	37.72121095	-122.3650821
214	1142	37.72120425	-122.3650881
215	1161	37.72119749	-122.3650939
216	1073	37.72119005	-122.3651003
217	1065	37.72118298	-122.3651067
218	1047	37.72117693	-122.3651132
219	1076	37.72117021	-122.3651198
220	1146	37.72116317	-122.3651259
221	1236	37.7211565	-122.3651316
222	1271	37.72114934	-122.3651367
223	1197	37.72114337	-122.3651377
224	1231	37.72113734	-122.3651368
225	1231	37.72112889	-122.3651346
226	1216	37.72112265	-122.3651301
227	1161	37.72111661	-122.3651237
228	1138	37.72111043	-122.3651166
229	993	37.72110395	-122.3651073
230	1019	37.72109826	-122.3650985
231	1080	37.72109285	-122.36509
232	1013	37.72108707	-122.3650822
233	1001	37.72108163	-122.3650719
234	971	37.72107599	-122.3650625
235	961	37.72107128	-122.3650537
236	1071	37.72106622	-122.3650449
237	1136	37.72106129	-122.3650369
238	1065	37.7210559	-122.3650284
239	1040	37.72105071	-122.3650201
240	1114	37.72104522	-122.3650111
241	1236	37.72104036	-122.3650027
242	1230	37.72103513	-122.3649941
243	1196	37.72102984	-122.3649854
244	1189	37.72102518	-122.3649771
245	1235	37.72102045	-122.3649686
246	1199	37.72101881	-122.3649616
247	1197	37.72101936	-122.3649553

Pile 284, Pad C09

Sample ID	Gamma Total cps	Latitude	Longitude
248	1130	37.72102125	-122.364948
249	1194	37.72102431	-122.3649393
250	1251	37.72103027	-122.3649318
251	1143	37.72103529	-122.3649239
252	1202	37.7210411	-122.3649165
253	1231	37.7210478	-122.3649096
254	1210	37.72105422	-122.3649032
255	1233	37.72106134	-122.3648967
256	1234	37.72106798	-122.3648903
257	**1255**	**37.7210748**	**-122.3648836**
258	1118	37.72108185	-122.3648776
259	1140	37.72108808	-122.3648714
260	1236	37.72109492	-122.3648654
261	1205	37.72110152	-122.3648591
262	1212	37.72110857	-122.364853
263	1231	37.7211152	-122.3648467
264	1236	37.7211222	-122.3648405
265	1199	37.72112918	-122.3648342
266	1270	37.72113671	-122.3648277
267	1236	37.72114346	-122.3648217
268	1087	37.72114953	-122.3648157
269	977	37.72115667	-122.3648094
270	1003	37.72116328	-122.3648029
271	969	37.72117009	-122.3647963
272	916	37.72117708	-122.3647899
273	869	37.72118408	-122.3647833
274	939	37.72119107	-122.3647768
275	919	37.721198	-122.3647707
276	877	37.72120472	-122.3647648
277	981	37.72121116	-122.3647594
278	932	37.72121813	-122.3647564
279	849	37.72122415	-122.3647563
280	852	37.7212308	-122.3647587
281	899	37.72123731	-122.3647626
282	944	37.72124367	-122.3647675
283	977	37.72124971	-122.364774
284	921	37.72125571	-122.3647815
285	941	37.72126111	-122.3647896
286	1002	37.72126663	-122.364798
287	963	37.72127192	-122.3648063
288	982	37.72127709	-122.3648144
289	1037	37.72128229	-122.3648227
290	1146	37.72128775	-122.3648312
291	1168	37.72129288	-122.3648396
292	1153	37.72129833	-122.3648483
293	1143	37.72130403	-122.3648569
294	1236	37.72130907	-122.3648654
295	1232	37.72131421	-122.3648741
296	1140	37.72131899	-122.3648828
297	1238	37.72132455	-122.3648917
298	1213	37.72132984	-122.3649004
299	1237	37.72133489	-122.3649086
300	1214	37.7213383	-122.3649166
301	1196	37.72133938	-122.3649244
302	1232	37.72133931	-122.3649329
303	1215	37.72133725	-122.3649412
304	**1015**	**37.72133369**	**-122.3649494**
305	1145	37.72132804	-122.3649573
306	1174	37.72132262	-122.364965
307	1115	37.72131606	-122.3649723
308	1094	37.72130937	-122.3649792

Pile 284, Pad C09

Sample ID	Gamma Total cps	Latitude	Longitude
309	1206	37.72130278	-122.3649857
310	1177	37.72129603	-122.3649922
311	1145	37.7212897	-122.3649988
312	1056	37.72128271	-122.3650055
313	996	37.72127579	-122.3650121
314	957	37.72126855	-122.3650182
315	963	37.72126153	-122.3650246
316	1080	37.72125447	-122.3650305
317	1017	37.72124786	-122.3650367
318	1089	37.72124058	-122.3650426
319	1083	37.72123373	-122.3650488
320	1087	37.72122665	-122.3650547
321	1087	37.72121906	-122.365061
322	1112	37.72121189	-122.3650674
323	1098	37.72120455	-122.3650734
324	1170	37.72119748	-122.3650794
325	1162	37.72119073	-122.3650857
326	1024	37.7211833	-122.3650918
327	1021	37.7211766	-122.3650982
328	1113	37.72116963	-122.3651041
329	1088	37.72116264	-122.3651109
330	1215	37.72115541	-122.3651161
331	1278	37.72115024	-122.3651182
332	1310	37.72114386	-122.3651179
333	1291	37.7211369	-122.3651152
334	1139	37.72113072	-122.3651104
335	1135	37.72112271	-122.3651039
336	1095	37.72111615	-122.3650967
337	1064	37.72111042	-122.3650887
338	985	37.72110455	-122.3650809
339	966	37.72109966	-122.3650726
340	954	37.72109426	-122.3650641
341	951	37.72108907	-122.3650562
342	1019	37.721084	-122.3650477
343	1101	37.72107889	-122.3650388
344	1089	37.72107346	-122.3650299
345	1100	37.72106801	-122.3650208
346	1016	37.72106263	-122.3650119
347	1059	37.72105774	-122.3650032
348	1163	37.72105237	-122.3649946
349	1322	**37.7210477**	**-122.364986**
350	1275	37.72104286	-122.3649772
351	1106	37.7210392	-122.3649688
352	1221	37.72103729	-122.3649605
353	1139	37.72103744	-122.3649528
354	1237	37.72103994	-122.3649447
355	1257	37.72104377	-122.3649358
356	1216	37.72104799	-122.3649273
357	1210	37.72105375	-122.3649198
358	1230	37.72105973	-122.3649128
359	1251	37.721066	-122.3649059
360	1175	37.72107302	-122.364899
361	1190	37.72107993	-122.3648921
362	1035	37.72108714	-122.3648858
363	1033	37.72109359	-122.3648795
364	1219	37.72110024	-122.3648735
365	1253	37.72110718	-122.3648675
366	1204	37.72111393	-122.3648611
367	1236	37.72112044	-122.3648544
368	1329	**37.72112733**	**-122.3648478**
369	1196	37.72113447	-122.3648415

Pile 284, Pad C09

Sample ID	Gamma Total cps	Latitude	Longitude
370	[illegible]	37.72114192	-122.364835
371	1182	37.72114817	-122.364829
372	1075	37.7211545	-122.3648232
373	942	37.72116093	-122.3648165
374	961	37.72116805	-122.3648108
375	1005	37.72117489	-122.3648047
376	929	37.72118195	-122.3647981
377	883	37.72118888	-122.3647915
378	911	37.72119598	-122.3647851
379	902	37.72120253	-122.3647785
380	893	37.72120916	-122.3647732
381	953	37.72121589	-122.3647705
382	887	37.72122143	-122.36477
383	886	37.72122767	-122.3647721
384	949	37.72123423	-122.3647756
385	959	37.72124069	-122.3647814
386	952	37.72124665	-122.3647876
387	913	37.72125291	-122.3647954
388	926	37.72125839	-122.3648031
389	997	37.72126324	-122.364811
390	986	37.72126851	-122.3648189
391	999	37.72127359	-122.3648271
392	1013	37.72127899	-122.3648359
393	1152	37.7212847	-122.3648442
394	1198	37.72128983	-122.3648526
395	[illegible]	37.72129499	-122.3648612
396	[illegible]	37.72130044	-122.36487
397	[illegible]	37.72130564	-122.3648781
398	[illegible]	37.72131117	-122.3648863
399	[illegible]	37.72131633	-122.364895
400	[illegible]	**37.7213217**	**-122.3649035**
401	[illegible]	37.72132587	-122.3649123
402	[illegible]	37.72132808	-122.3649205
403	[illegible]	37.72132822	-122.3649284
404	[illegible]	37.72132667	-122.3649361
405	[illegible]	37.72132391	-122.3649447
406	1203	37.72131907	-122.3649529
407	1117	37.7213132	-122.3649608
408	1113	37.72130708	-122.3649681
409	1150	37.72130074	-122.3649746
410	1152	37.72129424	-122.3649809
411	1108	37.72128771	-122.3649877
412	1021	37.72128065	-122.3649945
413	834	37.72127371	-122.3650012
414	905	37.72126625	-122.3650072
415	940	37.72125966	-122.3650136
416	986	37.72125258	-122.3650198
417	1002	37.72124574	-122.3650258
418	1046	37.72123874	-122.3650316
419	1060	37.72123212	-122.3650379
420	1081	37.72122521	-122.3650437
421	1046	37.72121782	-122.3650501
422	1125	37.72121083	-122.3650563
423	1103	37.72120381	-122.3650623
424	1143	37.72119693	-122.3650682
425	1121	37.72118976	-122.3650739
426	1066	37.72118325	-122.36508
427	1046	37.72117607	-122.3650853
428	1125	37.72116927	-122.3650913
429	1136	37.72116193	-122.365097
430	1129	37.7211549	-122.3651014
431	1189	37.7211484	-122.3651027

Pile 284, Pad C09

Sample ID	Gamma Total cps	Latitude	Longitude
432	1[illegible]	37.72114156	-122.365102
433	1[illegible]	37.72113476	-122.3650991
434	1[illegible]	37.72112777	-122.3650938
435	1[illegible]	37.7211213	-122.3650873
436	1037	37.72111513	-122.3650798
437	911	37.72110994	-122.3650725
438	936	37.7211041	-122.3650644
439	955	37.72109831	-122.3650561
440	1004	37.72109284	-122.3650477
441	1126	37.72108732	-122.365039
442	1078	37.72108222	-122.3650302
443	996	37.72107696	-122.3650215
444	1094	37.72107167	-122.3650131
445	1046	37.72106661	-122.3650046
446	1[illegible]	37.72106083	-122.3649953
447	1[illegible]	37.72105592	-122.3649864
448	1[illegible]	37.72105149	-122.3649773
449	1[illegible]	37.721048	-122.3649685
450	1[illegible]	37.72104663	-122.3649609
451	1[illegible]	37.72104758	-122.3649528
452	1[illegible]	37.72105008	-122.3649439
453	1[illegible]	37.72105429	-122.3649356
454	1[illegible]	37.72105874	-122.3649276
455	1[illegible]	37.7210646	-122.3649203
456	1[illegible]	37.72107102	-122.3649129
457	1177	37.72107751	-122.3649055
458	1094	37.72108455	-122.3648988
459	1006	37.72109198	-122.3648923
460	1082	37.72109847	-122.3648862
461	1[illegible]	37.7211049	-122.3648802
462	1[illegible]	37.72111162	-122.3648743
463	1[illegible]	37.72111862	-122.3648683
464	1[illegible]	37.72112571	-122.3648624
465	1[illegible]	37.72113227	-122.364856
466	1188	37.72113974	-122.3648499
467	1156	37.72114663	-122.3648438
468	1114	37.72115328	-122.3648379
469	1088	37.72116001	-122.3648317
470	1006	37.72116685	-122.3648257
471	991	37.72117389	-122.3648196
472	1061	37.7211812	-122.3648135
473	998	37.72118789	-122.3648071
474	980	37.72119527	-122.364801
475	969	37.72120219	-122.3647946
476	946	37.72120906	-122.3647895
477	1005	37.72121514	-122.3647874
478	961	37.721221	-122.3647876
479	962	37.72122721	-122.3647896
480	1002	37.72123404	-122.3647937
481	976	37.72124102	-122.3647996
482	959	37.72124681	-122.3648061
483	998	37.72125269	-122.3648136
484	1011	37.72125836	-122.3648214
485	962	37.72126339	-122.3648295
486	991	37.72126865	-122.364837
487	986	37.72127407	-122.3648459
488	1033	37.7212795	-122.3648545
489	1[illegible]	37.72128469	-122.3648629
490	1[illegible]	37.72129006	-122.3648716
491	1[illegible]	**37.72129518**	**-122.36488**
492	1[illegible]	37.72130033	-122.3648884
493	1[illegible]	37.7213059	-122.364897

Pile 284, Pad C09

Sample ID	Gamma Total cps	Latitude	Longitude
494	[illegible]	37.72131077	-122.3649055
495	[illegible]	37.72131453	-122.3649141
496	[illegible]	37.72131569	-122.3649221
497	1201	37.72131506	-122.3649292
498	1063	37.72131392	-122.364938
499	1124	37.72131036	-122.3649473
500	1165	37.72130529	-122.3649552
501	1170	37.72129947	-122.3649624
502	1141	37.72129363	-122.3649693
503	1154	37.72128748	-122.364976
504	1133	37.72128059	-122.364982
505	891	37.72127347	-122.3649883
506	820	37.72126674	-122.364994
507	909	37.72125975	-122.365
508	897	37.72125276	-122.3650063
509	942	37.72124547	-122.3650123
510	983	37.72123874	-122.3650187
511	979	37.72123195	-122.3650247
512	920	37.7212248	-122.3650306
513	1026	37.72121778	-122.3650367
514	1067	37.72121044	-122.3650433
515	1075	37.72120372	-122.3650488
516	1089	37.72119666	-122.3650549
517	1127	37.72118996	-122.365061
518	1074	37.72118319	-122.3650669
519	1061	37.72117644	-122.3650732
520	1150	37.72116935	-122.3650791
521	1194	37.72116217	-122.3650846
522	1204	37.72115479	-122.3650875
523	1158	37.72114827	-122.3650888
524	[illegible]	37.72114122	-122.3650874
525	[illegible]	37.72113394	-122.365084
526	1124	37.721127	-122.3650787
527	1066	37.72112116	-122.3650724
528	1016	37.7211154	-122.3650654
529	961	37.72110913	-122.3650573
530	961	37.72110369	-122.3650486
531	1001	37.72109829	-122.3650398
532	1114	37.72109278	-122.3650316
533	1087	37.72108807	-122.3650232
534	955	37.72108289	-122.3650146
535	1063	37.7210777	-122.3650065
536	1149	37.72107182	-122.3649977
537	[illegible]	37.72106661	-122.364989
538	[illegible]	37.72106181	-122.3649806
539	[illegible]	37.72105822	-122.364972
540	[illegible]	37.72105709	-122.3649645
541	[illegible]	37.72105804	-122.3649566
542	[illegible]	37.72106071	-122.3649483
543	[illegible]	37.72106411	-122.3649399
544	[illegible]	37.72106908	-122.364932
545	[illegible]	37.72107439	-122.364924
546	1213	37.72108091	-122.3649169
547	1137	37.72108804	-122.36491
548	1123	37.72109468	-122.3649032
549	1126	37.72110163	-122.3648969
550	1180	37.72110835	-122.3648908
551	1196	37.7211152	-122.3648845
552	1187	37.72112217	-122.3648783
553	1160	37.72112899	-122.3648722
554	1163	37.72113545	-122.3648663
555	1069	37.72114272	-122.3648598

Pile 284, Pad C09

Sample ID	Gamma Total cps	Latitude	Longitude
556	1094	37.72114947	-122.3648534
557	1086	37.72115541	-122.3648479
558	1090	37.72116048	-122.3648426
559	1074	37.72116615	-122.3648377
560	1061	37.72117218	-122.3648324
561	1078	37.72117825	-122.3648267
562	1098	37.7211845	-122.3648216
563	1133	37.72119053	-122.3648163
564	1144	37.72119709	-122.364811
565	1063	37.72120345	-122.3648063
566	1004	37.72120969	-122.3648033
567	1057	37.72121537	-122.3648024
568	1032	37.72122104	-122.3648026
569	984	37.72122667	-122.3648045
570	992	37.72123236	-122.3648081
571	1026	37.72123835	-122.3648129
572	1004	37.72124353	-122.3648188
573	1008	37.72124874	-122.364825
574	994	37.72125385	-122.3648317
575	1006	37.72125845	-122.3648386
576	993	37.72126324	-122.3648455
577	1016	37.72126805	-122.3648533
578	1113	37.72127276	-122.3648608
579	1117	37.7212777	-122.3648683
580	1194	37.72128249	-122.3648759
581	[illegible]	37.72128701	-122.3648837
582	[illegible]	37.7212917	-122.3648915
583	[illegible]	37.72129589	-122.3648996
584	[illegible]	37.72130057	-122.3649074
585	[illegible]	37.72130312	-122.3649142
586	[illegible]	37.72130413	-122.3649216
587	1174	37.72130454	-122.3649292
588	1090	37.7213025	-122.3649368
589	1132	37.72129918	-122.3649443
590	1159	37.72129592	-122.3649519
591	1124	37.72129108	-122.3649583
592	1149	37.72128604	-122.3649647
593	1144	37.72128008	-122.3649708
594	1092	37.72127461	-122.3649759
595	944	37.7212683	-122.3649813
596	844	37.7212625	-122.3649868
597	834	37.72125622	-122.364992
598	905	37.72125027	-122.3649973
599	936	37.72124394	-122.3650027
600	897	37.72123792	-122.3650083
601	931	37.72123197	-122.3650139
602	978	37.72122585	-122.3650189
603	1037	37.72121962	-122.3650242
604	1114	37.7212133	-122.3650295
605	1177	37.72120691	-122.3650346
606	1115	37.72120085	-122.3650398
607	1109	37.72119466	-122.3650448
608	1140	37.72118901	-122.3650507
609	1166	37.72118293	-122.3650557
610	1080	37.72117604	-122.3650605
611	1055	37.72116989	-122.3650654
612	1126	37.72116315	-122.3650697
613	1171	37.72115675	-122.3650717
614	1209	37.72115061	-122.3650726
615	[illegible]	37.72114437	-122.3650714
616	1199	37.72113844	-122.3650683
617	1175	37.72113193	-122.3650641

Pile 284, Pad C09

Sample ID	Gamma Total cps	Latitude	Longitude
618	1085	37.72112619	-122.3650587
619	1019	37.72112085	-122.3650525
620	1036	37.72111561	-122.365046
621	1019	37.72110995	-122.3650382
622	996	37.72110492	-122.3650304
623	1038	37.72110024	-122.365023
624	1072	37.72109549	-122.3650154
625	1132	37.7210904	-122.3650077
626	1157	37.72108565	-122.3649997
627	[illegible]	37.72108075	-122.3649921
628	[illegible]	37.72107635	-122.364984
629	[illegible]	37.72107327	-122.3649754
630	[illegible]	37.72107131	-122.3649681
631	[illegible]	37.72107111	-122.3649608
632	[illegible]	37.72107167	-122.3649537
633	**1463**	**37.72107376**	**-122.3649465**
634	[illegible]	37.72107722	-122.3649395
635	[illegible]	37.72108173	-122.3649324
636	[illegible]	37.72108677	-122.3649255
637	1132	37.72109273	-122.364919
638	1119	37.72109858	-122.3649124
639	1181	37.72110477	-122.3649067
640	[illegible]	37.7211107	-122.3649012
641	1177	37.72111685	-122.3648958
642	1094	37.72112315	-122.3648904
643	1160	37.72112944	-122.3648853
644	1155	37.72113557	-122.3648797
645	1121	37.72114175	-122.3648744
646	1116	37.72114809	-122.3648688
647	1134	37.7211544	-122.3648631
648	1116	37.72116042	-122.3648577
649	1159	37.72116657	-122.3648525
650	1150	37.72117257	-122.3648473
651	1126	37.72117855	-122.3648419
652	1135	37.72118531	-122.3648365
653	1146	37.72119193	-122.364831
654	1190	37.7211982	-122.3648254
655	1181	37.7212042	-122.3648208
656	1088	37.72121003	-122.3648182
657	1093	37.7212156	-122.3648161
658	997	37.72122184	-122.3648165
659	929	37.72122794	-122.3648193
660	1101	37.72123402	-122.3648226
661	1119	37.72123931	-122.364827
662	1098	37.72124442	-122.3648331
663	1026	37.72124976	-122.3648396
664	1036	37.72125425	-122.364846
665	999	37.72125892	-122.364853
666	1054	37.7212638	-122.3648607
667	1052	37.72126872	-122.3648685
668	1055	37.7212731	-122.364876
669	1046	37.72127755	-122.3648837
670	1041	37.72128145	-122.3648918
671	1093	37.72128609	-122.3648995
672	1122	37.72128945	-122.3649076
673	1153	37.72129165	-122.3649148
674	1190	37.7212931	-122.3649226
675	[illegible]	37.72129242	-122.3649306
676	1119	37.72129013	-122.3649377
677	1180	37.72128688	-122.3649452
678	1144	37.72128247	-122.3649518

Pile 284, Pad C09

Sample ID	Gamma Total cps	Latitude	Longitude
679	**1210**	**37.72127769**	**-122.3649582**
680	1164	37.72127253	-122.364964
681	1041	37.7212665	-122.3649698
682	995	37.72126024	-122.3649754
683	866	37.7212544	-122.364981
684	987	37.72124862	-122.3649868
685	932	37.72124258	-122.3649926
686	974	37.72123636	-122.3649981
687	917	37.72123004	-122.3650033
688	998	37.72122377	-122.3650088
689	1183	37.72121792	-122.3650144
690	1187	37.72121192	-122.3650198
691	1234	37.72120583	-122.3650253
692	1223	37.72119964	-122.3650308
693	1191	37.72119387	-122.3650364
694	1081	37.7211885	-122.3650427
695	1121	37.72118244	-122.3650487
696	1177	37.72117631	-122.3650545
697	1075	37.7211702	-122.3650602
698	1068	37.72116425	-122.3650634
699	1131	37.72115831	-122.3650652
700	1187	37.72115227	-122.3650658
701	1207	37.72114576	-122.3650635
702	1183	37.72114011	-122.3650597
703	1188	37.72113448	-122.365055
704	1133	37.72112861	-122.3650492
705	1173	37.72112312	-122.3650428
706	1152	37.72111781	-122.3650359
707	1108	37.72111218	-122.3650287
708	1059	37.72110731	-122.3650214
709	1182	37.72110237	-122.3650142
710	1130	37.72109781	-122.3650066
711	1218	37.72109222	-122.3649983
712	1239	37.72108801	-122.3649904
713	1215	37.72108414	-122.3649823
714	1243	37.7210823	-122.3649745
715	1242	37.72108128	-122.3649666
716	1235	37.72108205	-122.3649596
717	1234	37.72108387	-122.3649518
718	1279	37.72108673	-122.3649444
719	1239	37.7210911	-122.3649373
720	1216	37.7210963	-122.3649304
721	1111	37.72110204	-122.3649237
722	1235	37.72110813	-122.3649176
723	1196	37.72111388	-122.3649117
724	1231	37.72111962	-122.364906
725	1200	37.72112577	-122.3649005
726	1148	37.72113179	-122.3648946
727	1140	37.72113754	-122.3648889
728	1129	37.72114343	-122.3648833
729	1150	37.72114969	-122.3648775
730	1131	37.72115594	-122.3648717
731	1126	37.72116232	-122.3648662
732	1126	37.72116871	-122.3648609
733	1147	37.72117428	-122.3648551
734	1135	37.72118058	-122.3648497
735	1181	37.72118726	-122.3648446
736	1139	37.72119373	-122.3648389
737	1156	37.72120036	-122.3648341
738	1173	37.72120678	-122.3648304
739	1065	37.72121257	-122.3648282
740	1059	37.72121878	-122.3648285

Pile 284, Pad C09

Sample ID	Gamma Total cps	Latitude	Longitude
741	1008	37.72122497	-122.3648299
742	1155	37.72123086	-122.3648327
743	**1441**	**37.72123629**	**-122.3648369**
744	1299	37.72124148	-122.3648416
745	1072	37.72124714	-122.3648478
746	1047	37.72125236	-122.3648537
747	1037	37.72125743	-122.3648605
748	1050	37.72126258	-122.3648687
749	939	37.72126696	-122.3648766
750	989	37.72127141	-122.3648846
751	995	37.7212751	-122.3648925
752	1016	37.72127908	-122.3649005
753	1091	37.72128191	-122.3649079
754	1135	37.7212835	-122.3649154
755	1211	37.7212831	-122.3649229
756	1279	37.72128077	-122.3649299
757	1163	37.72127815	-122.3649372
758	1177	37.72127472	-122.3649443
759	1173	37.72127	-122.3649509
760	1173	37.72126504	-122.3649574
761	1123	37.72125926	-122.3649631
762	1034	37.72125356	-122.3649688
763	975	37.72124783	-122.3649746
764	1036	37.72124174	-122.3649801
765	927	37.7212358	-122.3649854
766	982	37.72122966	-122.3649911
767	1004	37.7212239	-122.3649961
768	1035	37.72121816	-122.3650018
769	1089	37.72121185	-122.3650076
770	1236	37.7212063	-122.3650129
771	1294	37.72120007	-122.3650184
772	1274	37.72119407	-122.3650239
773	1225	37.72118802	-122.3650295
774	1049	37.72118218	-122.3650349
775	1016	37.72117616	-122.3650404
776	1159	37.72116963	-122.3650457
777	1236	37.72116335	-122.3650492
778	1196	37.72115751	-122.3650511
779	1161	37.72115168	-122.365051
780	1165	37.72114638	-122.3650496
781	1110	37.72113995	-122.3650458
782	1179	37.7211342	-122.3650408
783	1236	37.72112784	-122.3650351
784	1210	37.72112244	-122.3650288
785	1081	37.72111747	-122.3650216
786	1137	37.72111278	-122.3650144
787	1194	37.72110803	-122.3650068
788	1235	37.72110332	-122.3649995
789	1231	37.72109828	-122.3649913
790	1193	37.72109516	-122.3649833
791	1179	37.72109371	-122.3649751
792	1190	37.72109338	-122.3649676
793	1219	37.72109406	-122.36496
794	1214	37.72109668	-122.3649522
795	1215	37.72110008	-122.3649451
796	1214	37.72110413	-122.3649376
797	1209	37.72110932	-122.3649305
798	1241	37.7211147	-122.3649238
799	1179	37.72112039	-122.3649181
800	1248	37.72112588	-122.3649122
801	1198	37.72113169	-122.3649071
802	1214	37.72113721	-122.3649019

Pile 284, Pad C09

Sample ID	Gamma Total cps	Latitude	Longitude
803	1157	37.72114347	-122.3648967
804	1202	37.72114926	-122.3648912
805	[illegible]	37.72115502	-122.3648857
806	1193	37.72116073	-122.3648799
807	1120	37.72116637	-122.3648744
808	1114	37.72117278	-122.3648692
809	1127	37.72117919	-122.3648639
810	1122	37.72118555	-122.3648586
811	1123	37.721192	-122.3648536
812	1197	37.72119829	-122.3648483
813	1175	37.72120484	-122.364843
814	1164	37.72121089	-122.3648381
815	1115	37.72121756	-122.3648339
816	1051	37.72122372	-122.3648313
817	1143	37.72122998	-122.3648307
818	[illegible]	37.72123539	-122.3648315
819	[illegible]	37.72124005	-122.3648343
820	1055	37.72124429	-122.3648381
821	1043	37.72124845	-122.3648444
822	1042	37.72125158	-122.3648505
823	1020	37.72125518	-122.3648582
824	1043	37.72125863	-122.3648666
825	946	37.72126223	-122.3648755
826	934	37.7212655	-122.3648839
827	969	37.7212692	-122.3648919
828	1044	37.72127272	-122.3648997
829	1055	37.72127428	-122.3649074
830	1125	37.72127474	-122.3649146
831	1194	37.72127332	-122.3649214
832	[illegible]	37.72127081	-122.3649284
833	1187	37.72126731	-122.3649355
834	1172	37.72126283	-122.3649419
835	1187	37.72125839	-122.3649486
836	1132	37.72125334	-122.3649546
837	1070	37.7212482	-122.364961
838	986	37.72124218	-122.3649664
839	915	37.72123591	-122.3649719
840	978	37.72122981	-122.3649774
841	1002	37.72122391	-122.3649831
842	1010	37.72121787	-122.3649887
843	1085	37.72121225	-122.3649943
844	1053	37.72120658	-122.3649996
845	1198	37.72120037	-122.3650054
846	[illegible]	37.72119444	-122.3650113
847	[illegible]	37.72118816	-122.3650173
848	1205	37.72118211	-122.3650225
849	1081	37.72117576	-122.3650279
850	1057	37.7211698	-122.3650336
851	[illegible]	37.7211631	-122.3650382
852	1091	37.72115707	-122.3650411
853	1137	37.72115246	-122.365041
854	1094	37.72114786	-122.3650395
855	1115	37.72114204	-122.365036
856	1200	37.72113605	-122.3650308
857	1209	37.72113081	-122.3650248
858	1151	37.72112538	-122.3650178
859	1067	37.72112098	-122.3650113
860	1177	37.7211158	-122.365003
861	[illegible]	37.72111091	-122.3649953
862	[illegible]	37.72110649	-122.3649876
863	[illegible]	37.72110393	-122.36498
864	[illegible]	37.72110306	-122.3649726

Pile 284, Pad C09

Sample ID	Gamma Total cps	Latitude	Longitude
865	[illegible]	**37.72110311**	**-122.3649662**
866	[illegible]	37.72110527	-122.3649593
867	1159	37.72110809	-122.364952
868	1131	37.72111225	-122.3649442
869	1099	37.72111748	-122.3649374
870	[illegible]	37.72112298	-122.364931
871	[illegible]	37.72112832	-122.3649249
872	[illegible]	37.72113377	-122.3649191
873	[illegible]	37.72113924	-122.3649139
874	1179	37.72114497	-122.3649087
875	1172	37.72115066	-122.3649028
876	[illegible]	37.72115661	-122.3648973
877	[illegible]	37.72116265	-122.3648914
878	1191	37.72116854	-122.3648859
879	1117	37.72117471	-122.3648803
880	1124	37.7211806	-122.364875
881	1163	37.72118706	-122.3648698
882	1127	37.72119339	-122.3648657
883	1128	37.72119908	-122.3648631
884	1066	37.72120455	-122.364862
885	1120	37.72121062	-122.3648615
886	1144	37.72121726	-122.3648621
887	1160	37.72122375	-122.3648636
888	1018	37.72123038	-122.364866
889	1059	37.72123641	-122.3648693
890	993	37.72124221	-122.3648737
891	983	37.72124814	-122.3648798
892	961	37.72125328	-122.3648866
893	978	37.72125778	-122.3648933
894	993	37.72126101	-122.3649004
895	1000	37.72126235	-122.3649068
896	1104	37.72126253	-122.3649136
897	1194	37.72126141	-122.3649212
898	1188	37.72125919	-122.3649282
899	1195	37.72125572	-122.3649345
900	1140	37.72125158	-122.3649407
901	1088	37.72124682	-122.3649471
902	1037	37.72124172	-122.3649533
903	927	37.72123602	-122.3649587
904	992	37.7212302	-122.3649644
905	1035	37.72122425	-122.3649708
906	959	37.72121826	-122.3649764
907	998	37.72121217	-122.3649824
908	1018	37.7212063	-122.3649878
909	979	37.72120048	-122.3649935
910	1200	37.7211943	-122.3649996
911	1212	37.7211883	-122.3650053
912	[illegible]	37.72118222	-122.3650109
913	[illegible]	**37.72117581**	**-122.3650157**
914	1141	37.72116953	-122.3650206
915	1140	37.72116357	-122.3650241
916	1201	37.72115779	-122.3650253
917	1150	37.72115217	-122.3650248
918	1163	37.72114632	-122.3650225
919	1130	37.72114029	-122.3650184
920	[illegible]	37.72113437	-122.3650125
921	1121	37.72112924	-122.3650067
922	1185	37.72112422	-122.3649998
923	[illegible]	37.72111916	-122.3649928
924	[illegible]	37.72111558	-122.364985
925	[illegible]	37.72111403	-122.3649779

Pile 284, Pad C09

Sample ID	Gamma Total cps	Latitude	Longitude
926	1130	37.7211136	-122.3649712
927	1139	37.72111405	-122.3649639
928	1135	37.72111656	-122.364957
929	1151	37.72112003	-122.3649493
930	1137	37.72112454	-122.3649426
931	1133	37.72112973	-122.3649358
932	1134	37.72113497	-122.3649297
933	1079	37.72114035	-122.3649235
934	1127	37.72114577	-122.3649181
935	1107	37.72115133	-122.3649127
936	1141	37.72115705	-122.3649073
937	1188	37.72116279	-122.364902
938	1120	37.72116858	-122.3648964
939	1062	37.72117483	-122.3648915
940	1022	37.72118077	-122.3648862
941	1047	37.7211859	-122.3648814
942	1134	37.72119215	-122.3648765
943	1105	37.72119848	-122.3648719
944	1044	37.72120411	-122.364869
945	1109	37.72120974	-122.3648683
946	1210	37.72121483	-122.3648681
947	1144	37.72122043	-122.3648698
948	1036	37.72122624	-122.3648731
949	1059	37.72123227	-122.3648782
950	1114	37.72123801	-122.3648844
951	1040	37.72124247	-122.3648911
952	1028	37.72124621	-122.3648974
953	997	37.72124887	-122.3649046
954	1078	37.72125023	-122.3649114
955	1054	37.72124949	-122.364918
956	1117	37.72124737	-122.3649242
957	1125	37.72124435	-122.3649306
958	1051	37.72124053	-122.3649377
959	976	37.72123575	-122.3649443
960	925	37.72123032	-122.3649504
961	988	37.72122469	-122.3649565
962	988	37.72121886	-122.3649627
963	908	37.72121337	-122.3649682
964	937	37.72120693	-122.3649742
965	1035	37.7212017	-122.3649794
966	1059	37.72119585	-122.364985
967	1062	37.72118995	-122.3649907
968	1169	37.72118379	-122.3649961
969	1190	37.72117784	-122.3650014
970	1231	37.72117211	-122.3650062
971	1137	37.72116591	-122.3650097
972	1157	37.72116016	-122.3650109
973	1132	37.72115429	-122.3650106
974	1180	37.7211481	-122.3650082
975	1214	37.72114213	-122.3650041
976	1213	37.72113696	-122.3649988
977	1257	37.72113167	-122.3649926
978	1274	37.72112761	-122.364986
979	1194	37.72112598	-122.3649797
980	1230	37.72112537	-122.3649735
981	1258	37.72112579	-122.3649664
982	1239	37.72112794	-122.364959
983	1230	37.72113109	-122.3649514
984	1215	37.72113517	-122.3649441
985	1165	37.72113986	-122.3649372
986	1329	37.72114502	-122.3649304
987	1213	37.72115033	-122.3649246

Pile 284, Pad C09

Sample ID	Gamma Total cps	Latitude	Longitude
988	1160	37.72115618	-122.3649192
989	1152	37.72116204	-122.3649137
990	1166	37.72116804	-122.3649088
991	1032	37.72117426	-122.3649029
992	963	37.72118058	-122.3648975
993	949	37.72118683	-122.3648919
994	1059	37.72119269	-122.3648873
995	1082	37.72119865	-122.364883
996	1086	37.72120379	-122.3648803
997	1082	37.72120966	-122.3648802
998	1163	37.72121428	-122.364881
999	1137	37.72121969	-122.3648839
1000	1115	37.72122515	-122.3648886
1001	1095	37.72123058	-122.3648944
1002	1090	37.72123401	-122.3649005
1003	1042	37.72123608	-122.3649068
1004	1025	37.72123633	-122.3649127
1005	1046	37.72123556	-122.3649186
1006	1043	37.72123347	-122.3649258
1007	1023	37.72122995	-122.3649331
1008	841	37.72122566	-122.3649402
1009	888	37.72122086	-122.3649469
1010	892	37.72121519	-122.364953
1011	862	37.72120961	-122.3649591
1012	929	37.72120383	-122.3649651
1013	1060	37.72119824	-122.3649704
1014	1022	37.72119221	-122.3649759
1015	1132	37.72118629	-122.3649816
1016	1196	37.72118014	-122.3649869
1017	[illegible]	37.72117398	-122.3649916
1018	1204	37.72116802	-122.3649953
1019	[illegible]	37.72116179	-122.3649968
1020	[illegible]	37.72115584	-122.3649959
1021	[illegible]	37.72114999	-122.3649928
1022	[illegible]	37.7211444	-122.3649891
1023	[illegible]	37.72114021	-122.3649844
1024	[illegible]	37.72113787	-122.3649789
1025	[illegible]	37.72113726	-122.3649741
1026	[illegible]	37.72113743	-122.3649676
1027	[illegible]	37.72113949	-122.3649608
1028	[illegible]	37.72114271	-122.3649533
1029	[illegible]	37.7211465	-122.3649457
1030	[illegible]	37.72115164	-122.3649389
1031	[illegible]	37.72115656	-122.3649328
1032	1176	37.72116193	-122.3649272
1033	1172	37.72116785	-122.3649218
1034	1099	37.72117364	-122.3649162
1035	978	37.72117977	-122.364911
1036	963	37.72118615	-122.3649058
1037	1025	37.72119235	-122.364901
1038	1021	37.72119794	-122.3648979
1039	1069	37.72120366	-122.3648963
1040	1117	37.72120956	-122.3648962
1041	1091	37.72121509	-122.3648985
1042	1079	37.72121949	-122.3649022
1043	1046	37.72122191	-122.3649057
1044	972	37.72122323	-122.3649096
1045	987	37.72122324	-122.3649142
1046	892	37.72122238	-122.3649197
1047	922	37.72122032	-122.3649269
1048	871	37.72121654	-122.3649341
1049	856	37.72121174	-122.3649407

Pile 284, Pad C09

Sample ID	Gamma Total cps	Latitude	Longitude
1050	892	37.72120711	-122.3649472
1051	998	37.72120167	-122.3649532
1052	1056	37.72119602	-122.364959
1053	1038	37.72119007	-122.3649653
1054	1130	37.72118414	-122.3649709
1055	1278	37.72117827	-122.3649762
1056	1413	37.72117185	-122.3649806
1057	1539	37.72116571	-122.3649829
1058	1474	37.72116032	-122.3649825
1059	1394	37.7211563	-122.364981
1060	1377	37.72115369	-122.3649787
1061	**1571**	**37.72115213**	**-122.3649754**
1062	1497	37.72115168	-122.3649723
1063	1501	37.72115178	-122.3649668
1064	1455	37.72115345	-122.3649602
1065	1445	37.72115667	-122.3649526
1066	1375	37.72116037	-122.3649458
1067	1292	37.72116476	-122.3649396
1068	1178	37.72117003	-122.3649333
1069	1097	37.72117549	-122.3649275
1070	1020	37.72118139	-122.3649218
1071	975	37.72118754	-122.3649161
1072	1144	37.72119371	-122.3649119
1073	1132	37.72119891	-122.3649098
1074	1140	37.72120476	-122.3649095
1075	1116	37.72120678	-122.3649107
1076	1074	37.72120751	-122.3649121
1077	1041	37.72120755	-122.3649135
1078	988	37.72120762	-122.3649159
1079	967	37.72120673	-122.3649201
1080	976	37.72120515	-122.364926
1081	951	37.72120208	-122.3649333
1082	1012	37.72119832	-122.3649398
1083	1079	37.72119368	-122.3649463
1084	1184	37.7211884	-122.3649529
1085	1177	37.72118309	-122.3649596
1086	**1344**	**37.72117824**	**-122.3649661**
1087	1424	37.72117266	-122.3649714
1088	1518	37.72116853	-122.3649738
1089	1452	37.72116485	-122.3649736
1090	1459	37.72116172	-122.3649724
1091	1471	37.72116034	-122.3649706
1092	1450	37.72116319	-122.3649683
1093	1452	37.72116504	-122.3649671
1094	1425	37.7211646	-122.3649622
1095	1433	37.7211673	-122.3649566
1096	1383	37.72117043	-122.3649503
1097	1356	37.72117449	-122.3649442
1098	1099	37.72117902	-122.3649376
1099	1100	37.72118465	-122.3649306
1100	955	37.72118953	-122.364924
1101	1015	37.72119459	-122.3649182
1102	1125	37.72119925	-122.3649155
1103	1148	37.72120236	-122.3649154
1104	1083	37.72120399	-122.3649165
1105	1038	37.72120311	-122.3649175
1106	1076	37.7212035	-122.3649182
1107	1054	37.72120323	-122.3649195
1108	1050	37.72120314	-122.3649217
1109	955	37.72120171	-122.3649265
1110	941	37.7211977	-122.3649325

Pile 284, Pad C09

Sample ID	Gamma Total cps	Latitude	Longitude
1111	1061	37.72119287	-122.3649386
1112	1124	37.7211873	-122.3649446
1113	[illegible]	37.72118088	-122.3649502
1114	[illegible]	37.72117466	-122.364956
1115	[illegible]	37.72116887	-122.3649613
1116	[illegible]	37.72116294	-122.3649664
1117	[illegible]	37.72115625	-122.3649718
1118	[illegible]	37.72115014	-122.3649768
1119	[illegible]	37.72114372	-122.3649817
1120	[illegible]	37.72113713	-122.364987
1121	[illegible]	37.72113034	-122.3649922
1122	1202	37.72112391	-122.3649971
1123	1155	37.72111748	-122.3650021
1124	1161	37.72111061	-122.3650069
1125	1166	37.72110408	-122.3650105
1126	1034	37.72109782	-122.3650128
1127	1017	37.72109065	-122.3650136
1128	943	37.72108441	-122.365013
1129	1087	37.72107627	-122.365011
1130	1046	37.72106898	-122.3650087
1131	1019	37.72106206	-122.3650051
1132	1192	37.72105512	-122.3650008
1133	[illegible]	37.72104826	-122.3649964
1134	[illegible]	37.7210416	-122.3649913
1135	[illegible]	37.72103542	-122.364986
1136	1177	37.7210303	-122.3649796
1137	1173	37.72102535	-122.3649736
1138	[illegible]	37.72102096	-122.3649664
1139	[illegible]	37.72101836	-122.3649593
1140	[illegible]	37.72101727	-122.3649518
1141	[illegible]	37.72101698	-122.3649449
1142	[illegible]	37.7210193	-122.3649375
1143	[illegible]	37.72102155	-122.3649299
1144	[illegible]	37.72102585	-122.3649227
1145	[illegible]	37.72103015	-122.3649151
1146	[illegible]	37.72103548	-122.3649085
1147	[illegible]	37.72104002	-122.3649017
1148	[illegible]	37.72104003	-122.3649022
1149	[illegible]	37.7210329	-122.3649099
1150	[illegible]	37.72102233	-122.3649198
1151	[illegible]	37.72101158	-122.364932
1152	[illegible]	37.72100234	-122.3649434
1153	[illegible]	37.72099961	-122.3649463
1154	[illegible]	37.7210073	-122.3649374
1155	[illegible]	37.72101608	-122.3649282
1156	[illegible]	37.72102459	-122.3649202
1157	[illegible]	37.72102062	-122.3649231
1158	**[illegible]**	**37.72101039**	**-122.3649308**
1159	[illegible]	37.72099977	-122.3649369
1160	[illegible]	37.72099415	-122.3649415
1161	[illegible]	37.72100093	-122.3649353
1162	[illegible]	37.72100869	-122.3649276
1163	[illegible]	37.72101659	-122.3649207
1164	[illegible]	37.7210232	-122.3649144
1165	[illegible]	37.72103211	-122.3649091
1166	[illegible]	37.72104054	-122.364903
1167	[illegible]	37.72103647	-122.3649054
1168	[illegible]	37.72102703	-122.3649146
1169	[illegible]	37.72101674	-122.3649249
1170	[illegible]	37.72100662	-122.364937
1171	[illegible]	37.7209986	-122.3649467
1172	[illegible]	37.72100284	-122.3649421

Pile 284, Pad C09

Sample ID	Gamma Total cps	Latitude	Longitude
1173	1192	37.7210077	-122.3649356
1174	1198	37.72101359	-122.3649295
1175	1175	37.72101971	-122.3649247
1176	1145	37.72102614	-122.3649208
1177	1145	37.72103294	-122.3649173
1178	1176	37.72104125	-122.3649142
1179	1229	37.72104906	-122.364913
1180	1279	37.72105785	-122.3649124
1181	1241	37.72106644	-122.3649121
1182	1145	37.72107491	-122.3649129
1183	1119	37.72108406	-122.3649132
1184	1125	37.72109258	-122.3649143
1185	1129	37.72110167	-122.3649155
1186	1127	37.72111021	-122.364917
1187	1211	37.72111916	-122.3649182
1188	1251	37.72112801	-122.3649199
1189	1191	37.72113646	-122.3649218
1190	1135	37.72114536	-122.3649231
1191	1207	37.72115417	-122.364924
1192	1169	37.72116261	-122.364925
1193	1186	37.72117104	-122.3649252
1194	1064	37.72118025	-122.364925
1195	958	37.72118857	-122.3649242
1196	1028	37.72119708	-122.3649232
1197	1021	37.72120656	-122.3649221
1198	1051	37.72121519	-122.3649208
1199	933	37.72122344	-122.3649206
1200	999	37.72123231	-122.36492
1201	1065	37.72124081	-122.3649203
1202	1117	37.72125002	-122.3649206
1203	1100	37.72125871	-122.3649206
1204	1122	37.72126748	-122.3649205
1205	1165	37.72127687	-122.36492
1206	1160	37.7212858	-122.3649191
1207	1146	37.72129341	-122.3649168
1208	1151	37.7213019	-122.3649136
1209	1229	37.72131018	-122.3649105
1210	1199	37.72131837	-122.3649077
1211	1231	37.72132714	-122.3649062
1212	1345	37.72133506	-122.3649065
1213	1352	37.7213421	-122.364909
1214	1379	37.72134769	-122.3649133
1215	1377	37.72135182	-122.3649188
1216	1293	37.72135348	-122.3649265
1217	1235	37.72135368	-122.364934
1218	1275	37.72135295	-122.3649425
1219	1298	37.72134965	-122.3649509
1220	1291	37.72134545	-122.3649587
1221	1317	37.72134081	-122.3649664
1222	1322	37.72133483	-122.3649741
1223	1334	37.72133345	-122.364975
1224	1356	37.72133965	-122.3649677
1225	1376	37.72134788	-122.3649597
1226	1375	37.72135732	-122.3649521
1227	1375	37.72136687	-122.3649434
1228	1353	37.72137696	-122.3649356
1229	1335	37.72137216	-122.3649394
1230	1347	37.72136533	-122.364946
1231	1369	37.7213594	-122.3649526
1232	1340	37.72135479	-122.3649582
1233	1379	37.72135002	-122.3649633
1234	1439	37.72135073	-122.3649623

Pile 284, Pad C09

Sample ID	Gamma Total cps	Latitude	Longitude
1235	1763	37.72135934	-122.3649543
1236	1787	37.72136773	-122.3649468
1237	1611	37.72137796	-122.3649397
1238	1721	37.72137146	-122.3649441
1239	1817	37.72136275	-122.3649506
1240	1914	37.72135472	-122.3649552
1241	1749	37.72134576	-122.3649589
1242	1454	37.72133667	-122.3649633
1243	1239	37.72132719	-122.3649688
1244	1143	37.72133288	-122.3649651
1245	1355	37.72134218	-122.3649569
1246	1726	37.72135218	-122.3649479
1247	1757	37.72136276	-122.3649384
1248	1671	37.72137236	-122.3649312
1249	1715	37.72136621	-122.3649353
1250	1557	37.72135874	-122.3649415
1251	1761	37.72135141	-122.3649478
1252	1736	37.7213445	-122.3649538
1253	1531	37.72133705	-122.3649601
1254	1357	37.72132923	-122.3649661
1255	1129	37.72131992	-122.3649718
1256	1152	37.72130961	-122.3649778
1257	1178	37.72129984	-122.3649821
1258	1165	37.72129009	-122.364987
1259	952	37.72127936	-122.3649927
1260	796	37.72126945	-122.3649974
1261	899	37.72125983	-122.3650035
1262	937	37.72124965	-122.3650092
1263	938	37.7212396	-122.3650154
1264	947	37.72122965	-122.3650203
1265	1041	37.72121994	-122.3650252
1266	1200	37.72120936	-122.3650305
1267	1212	37.72119932	-122.3650352
1268	1123	37.72119008	-122.3650404
1269	1079	37.72117987	-122.3650456
1270	1189	37.72116895	-122.3650504
1271	1152	37.72115891	-122.3650548
1272	1189	37.72114883	-122.365059
1273	1195	37.72113847	-122.3650626
1274	1131	37.7211276	-122.3650666
1275	1063	37.72111846	-122.3650714
1276	909	37.72111098	-122.3650784
1277	1058	37.72110625	-122.3650875
1278	1052	37.72110439	-122.3650977
1279	1062	37.72110448	-122.3651098
1280	**1344**	**37.72110752**	**-122.3651221**
1281	1353	37.72111138	-122.3651327
1282	1335	37.72111721	-122.3651425
1283	1334	37.72112353	-122.3651485
1284	1337	37.72113004	-122.3651504
1285	1343	37.72113799	-122.3651495
1286	1320	37.72114686	-122.3651458
1287	1353	37.72115588	-122.3651401
1288	1196	37.72115978	-122.3651375
1289	1337	37.72115028	-122.3651452
1290	1329	37.72114066	-122.3651544
1291	1335	37.72113235	-122.3651649
1292	1331	37.72112916	-122.365169
1293	1335	37.72113766	-122.3651593
1294	1335	37.72114777	-122.3651518
1295	1340	37.7211571	-122.365144
1296	1335	37.72115227	-122.365148

Pile 284, Pad C09

Sample ID	Gamma Total cps	Latitude	Longitude
1297	[illegible]	37.72114196	-122.3651549
1298	[illegible]	37.72113233	-122.3651602
1299	[illegible]	37.72112481	-122.3651654
1300	[illegible]	37.72112836	-122.365163
1301	[illegible]	37.7211346	-122.3651576
1302	[illegible]	37.72114041	-122.3651517
1303	[illegible]	37.72114656	-122.3651446
1304	[illegible]	37.72115223	-122.3651372
1305	[illegible]	37.72115563	-122.365132
1306	[illegible]	37.72114864	-122.3651411
1307	[illegible]	37.7211397	-122.3651479
1308	**1414**	**37.72112897**	**-122.3651543**
1309	[illegible]	37.72112317	-122.3651588
1310	[illegible]	37.721133	-122.3651512
1311	[illegible]	37.7211421	-122.3651428
1312	[illegible]	37.7211495	-122.3651314
1313	[illegible]	37.72115545	-122.3651183
1314	1169	37.72116095	-122.3651055
1315	1163	37.7211654	-122.3650922
1316	1167	37.72116982	-122.3650786
1317	1061	37.72117382	-122.3650647
1318	1177	37.72117757	-122.3650509
1319	1039	37.72118035	-122.3650363
1320	[illegible]	37.72118261	-122.3650217
1321	[illegible]	37.72118506	-122.365007
1322	1082	37.72118809	-122.3649933
1323	1112	37.72119166	-122.3649791
1324	1032	37.72119647	-122.3649654
1325	1087	37.72120149	-122.3649529
1326	951	37.72120724	-122.3649407
1327	919	37.72121301	-122.3649278
1328	999	37.72121964	-122.3649157
1329	1032	37.72122563	-122.3649033
1330	1084	37.72123268	-122.3648911
1331	1114	37.72124	-122.3648791
1332	1011	37.72124724	-122.3648679
1333	1018	37.72125317	-122.3648567
1334	1006	37.72125692	-122.3648452
1335	991	37.72125765	-122.3648327
1336	998	37.72125702	-122.3648189
1337	974	37.72125559	-122.3648045
1338	931	37.72125408	-122.3647907
1339	959	37.72125342	-122.3647763
1340	966	37.7212504	-122.3647645
1341	892	37.72124577	-122.3647544
1342	828	37.72123924	-122.364747
1343	833	37.72122918	-122.3647437
1344	909	37.7212195	-122.3647441
1345	919	37.72120997	-122.3647472
1346	932	37.72119949	-122.364753
1347	915	37.72119211	-122.3647581
1348	897	37.72119981	-122.3647522
1349	927	37.72120957	-122.3647439
1350	904	37.72121952	-122.364735
1351	850	37.72123	-122.3647271
1352	870	37.72124046	-122.3647196
1353	846	37.7212467	-122.3647157
1354	827	37.72123847	-122.3647208
1355	883	37.72123027	-122.3647255
1356	868	37.72122196	-122.3647304
1357	886	37.72121388	-122.364736
1358	961	37.72120631	-122.3647419

Pile 284, Pad C09

Sample ID	Gamma Total cps	Latitude	Longitude
1359	921	37.72120989	-122.3647384
1360	912	37.7212185	-122.3647296
1361	830	37.72122843	-122.364721
1362	847	37.72123904	-122.3647132
1363	878	37.72124408	-122.3647095
1364	822	37.72123541	-122.3647157
1365	867	37.72122778	-122.3647225
1366	850	37.72122244	-122.3647308
1367	859	37.72121994	-122.3647402
1368	929	37.7212189	-122.3647513
1369	920	37.72121927	-122.3647617
1370	947	37.72122045	-122.3647745
1371	986	37.72122191	-122.3647869
1372	1047	37.72122271	-122.3647996
1373	1056	37.72122334	-122.3648119
1374	1003	37.72122467	-122.3648242
1375	1128	37.72122466	-122.364836
1376	1135	37.72122553	-122.3648482
1377	1152	37.72122601	-122.3648601
1378	1077	37.72122614	-122.3648733
1379	1137	37.72122694	-122.3648857
1380	1082	37.72122702	-122.364898
1381	986	37.721228	-122.3649091
1382	996	37.72123026	-122.3649183
1383	1042	37.72123307	-122.3649242
1384	1093	37.72123767	-122.3649264
1385	1097	37.72124093	-122.3649269
1386	1126	37.72124461	-122.3649248
1387	1073	37.72124768	-122.3649202
1388	1071	37.72125128	-122.3649118
1389	1028	37.72125345	-122.3649008
1390	1000	37.72125297	-122.3648904
1391	1001	37.72125057	-122.3648839
1392	1062	37.72124562	-122.3648767
1393	1010	37.72123863	-122.3648713
1394	1078	37.72122995	-122.3648663
1395	1169	37.72122378	-122.3648609
1396	1182	37.72122162	-122.364856
1397	1155	37.7212216	-122.3648509
1398	1126	37.72122348	-122.364843
1399	1076	37.72122669	-122.364832
1400	952	37.72123016	-122.3648207
1401	974	37.72123188	-122.3648098
1402	991	37.72123052	-122.3648013
1403	1010	37.7212277	-122.3647949
1404	1007	37.72122379	-122.364791
1405	1013	37.72121983	-122.3647903
1406	1022	37.72121552	-122.364792
1407	998	37.7212127	-122.3647952
1408	1100	37.72121038	-122.3648007
1409	1095	37.7212095	-122.3648091
1410	1150	37.72121005	-122.36482
1411	1158	37.72121307	-122.3648319
1412	1158	37.72121523	-122.3648426
1413	1124	37.72121573	-122.3648526
1414	1117	37.72121337	-122.3648636
1415	1080	37.72121018	-122.3648724
1416	1111	37.72120454	-122.3648844
1417	1048	37.72119798	-122.364896
1418	1096	37.72119062	-122.3649075
1419	972	37.72118278	-122.3649169
1420	1100	37.72117379	-122.3649266

Pile 284, Pad C09

Sample ID	Gamma Total cps	Latitude	Longitude
1421	1042	37.72116479	-122.3649361
1422	1093	37.72115563	-122.3649452
1423	1131	37.72114656	-122.3649541
1424	1155	37.72113765	-122.3649627
1425	1166	37.72112848	-122.3649716
1426	1175	37.72111899	-122.3649807
1427	1192	37.72110999	-122.3649894
1428	1234	37.72110014	-122.3649978
1429	1153	37.7210909	-122.3650054
1430	952	37.7210809	-122.3650139
1431	1041	37.72107133	-122.365023
1432	1088	37.72106218	-122.3650317
1433	1113	37.72105666	-122.3650369
1434	1128	37.7210599	-122.3650376
	1852	**Maximum**	
	193.28	**Std Dev**	
	1172.11	**Average**	
	1215	**3 σ Investigation Level**	

Investigation Level Exceeded

Biased samples were collected at locations identified by **BOLD**

ATTACHMENT 4

EXCAVATED SOIL UNIT
GAMMA SPECTROSCOPY REPORTS
(on CD only)

This page intentionally left blank.

EXCAVATED SOIL UNIT 281

C10-281

(NON-IR , WORK AREA 16 SOIL)

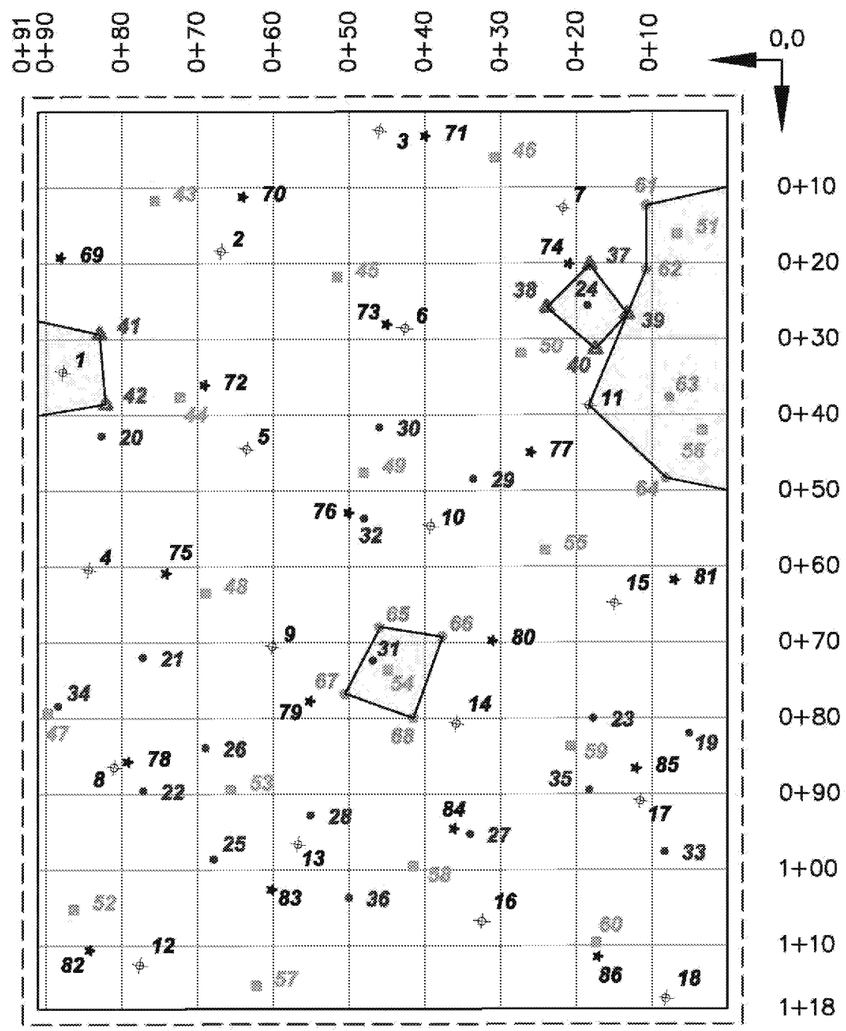

SYSTEMATIC 1 SAMPLES 1–18
BIASED SAMPLES 19–36
CHARACTERIZATION 1 SAMPLES 37–42
SYSTEMATIC 2 SAMPLES 43–60
CHARACTERIZATION 2 SAMPLES 61–68
SYSTEMATIC 3 SAMPLES 69–86

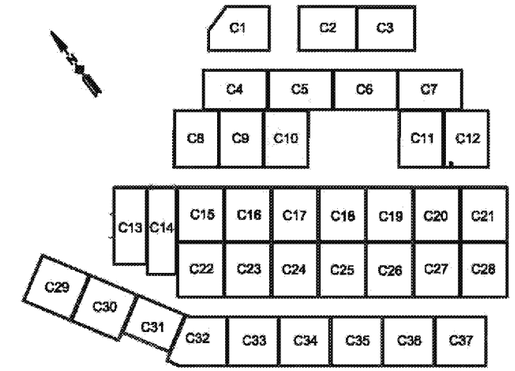

KEY PLAN

LEGEND:

1	SYSTEMATIC 1
19	BIASED
37	CHARACTERIZATION 1
43	SYSTEMATIC 2
61	CHARACTERIZATION 2
69	SYSTEMATIC 3

RECORD DRAWING

RADIOLOGICAL SCREENING YARD 2 (RSY2)
SOIL SAMPLING LOCATIONS AREA C10

HUNTERS POINT SHIPYARD-SAN FRANCISCO, CA

TETRA TECH EC, INC.

DRAWING NO: 18-PE-C10-281.DWG
DCN:
TASK: CTO 018
APPROVED BY: BMH
CHECKED BY: TYL
REV:
DRAWN BY: AEC
DATE: 07-23-10

\\Ecisfofile1\projects\CTO-RSY 2 Pad Surveys CAD Files\DWG Files\Active Pads\18-PE-C10-281.dwg 7/23/10

ORTEC g v - i (3263) Npp32 G53W3.10 07-JUL-2010 14:52:54
New World Technology Spectrum name: 2N000519.An1

Sample description
Parcel G 18-PG-C0281-01 359g
7/07/10 08:30

Acquisition information
Start time: 07-Jul-2010 13:06:54
Live time: 5400
Real time: 5408

- -

***** S U M M A R Y O F N U C L I D E S I N S A M P L E *****

Nuclide	Time of Count Activity pCi/g	Uncertainty 2 Sigma Counting pCi/g	Total pCi/g	MDA pCi/g
Ac-228	5.8020E-01	1.5192E-01	1.5712E-01	0.159E+00
AM-241 #A	-1.4895E-01	5.5576E+00	5.5576E+00	0.240E+00
Bi-212	6.3712E-01	2.9811E-01	3.0125E-01	0.208E+00
BI-214	8.2871E-01	1.1493E-01	1.2746E-01	0.448E-01
CO-60 #A	-4.2235E-02	2.3748E-01	2.3749E-01	0.224E-01
CS-137	1.1923E-01	4.5593E-02	4.6292E-02	0.310E-01
EU-152 #A	-1.5903E-01	9.3984E-02	9.4946E-02	0.102E+00
EU-154 A	3.6384E-02	4.9059E-02	4.9156E-02	0.665E-01
K-40	3.1534E+00	1.0242E+00	1.0474E+00	0.898E+00
Pa-234 A	1.0230E-01	1.0032E-01	1.0072E-01	0.117E+00
Pb-210 #C	0.0000E+00	7.8246E+00	7.8246E+00	0.000E+00
Pb-212	8.7740E-01	1.0383E-01	1.2346E-01	0.645E-01
PB-214	7.3621E-01	1.0716E-01	1.1950E-01	0.598E-01
RA-226	7.5832E-01	9.1998E-01	9.2176E-01	0.748E+00
Th-230 #A	-1.1631E+01	1.1812E+02	1.1814E+02	0.924E+01
Th-234	1.2104E+00	1.3579E+00	1.3627E+00	0.112E+01
Tl-208	3.4358E-01	7.1186E-02	7.4736E-02	0.359E-01
U-235 C	7.0424E-02	7.4712E-02	7.4901E-02	0.506E-01

- All peaks for activity calculation had bad shape.
* - Activity omitted from total
& - Activity omitted from total and all peaks had bad shape.
< - MDA value printed.
A - Activity printed, but activity < MDA.
B - Activity < MDA and failed test.
C - Area < Critical level.
F - Failed fraction or key line test.
H - Halflife limit exceeded

---------- S U M M A R Y ----------

Total Activity (32.4 to 2597.5 keV) 7.276E+00 pCi/g

Laboratory: New World Technology

ORTEC g v - i (3263) Npp32 G53W3.10 07-JUL-2010 14:53:12
New World Technology Spectrum name: 3N000595.An1

Sample description
Parcel G 18-PG-C0281-02 358g
7/07/10 08:35

Acquisition information
Start time: 07-Jul-2010 13:11:19
Live time: 5400
Real time: 5405

- -

***** S U M M A R Y O F N U C L I D E S I N S A M P L E *****

Nuclide		Time of Count Activity pCi/g	Uncertainty Counting pCi/g	2 Sigma Total pCi/g	MDA pCi/g
Ac-228		8.3056E-01	1.5629E-01	1.6650E-01	0.991E-01
AM-241		7.2062E-02	8.6162E-02	8.6401E-02	0.692E-01
Bi-212		4.9400E-01	3.3606E-01	3.3774E-01	0.255E+00
BI-214		7.2543E-01	1.2214E-01	1.3132E-01	0.503E-01
CO-60	#A	-7.2472E-03	1.4096E-02	1.4104E-02	0.260E-01
CS-137		3.2888E-02	3.5907E-02	3.5975E-02	0.278E-01
EU-152	A	-3.8185E-02	2.6416E-02	2.6613E-02	0.967E-01
EU-154	C	6.2170E-02	4.9284E-02	4.9565E-02	0.531E-01
K-40		7.3335E+00	8.6269E-01	1.0023E+00	0.234E+00
Pa-234	C	1.1759E-01	7.2136E-02	7.2867E-02	0.562E-01
Pb-210	#A	1.6793E-01	8.3068E-01	8.3078E-01	0.592E+00
Pb-212		8.8707E-01	9.6834E-02	1.1806E-01	0.576E-01
PB-214		6.9651E-01	1.4944E-01	1.5759E-01	0.700E-01
RA-226		7.8904E-01	9.0109E-01	9.0306E-01	0.735E+00
Th-230	#A	-7.2098E+00	2.8032E+01	2.8059E+01	0.608E+01
Th-234	A	3.7706E-01	1.0794E+00	1.0800E+00	0.984E+00
Tl-208		3.4317E-01	5.1161E-02	8.0295E-02	0.375E-01
U-235	A	4.7154E-02	7.2397E-02	7.2485E-02	0.504E-01

- All peaks for activity calculation had bad shape.
* - Activity omitted from total
& - Activity omitted from total and all peaks had bad shape.
< - MDA value printed.
A - Activity printed, but activity < MDA.
B - Activity < MDA and failed test.
C - Area < Critical level.
F - Failed fraction or key line test.
H - Halflife limit exceeded

---------- S U M M A R Y ----------

Total Activity (34.9 to 2779.2 keV) 1.131E+01 pCi/g

Laboratory: New World Technology

ORTEC g v - i (3263) Npp32 G53W3.10 07-JUL-2010 12:55:38
New World Technology Spectrum name: 1N000841.An1

Sample description
Parcel G 18-PG-C0281-03 388g
7/07/10 08:40

Acquisition information
Start time: 07-Jul-2010 12:05:38
Live time: 2700
Real time: 2701

- -

***** S U M M A R Y O F N U C L I D E S I N S A M P L E *****

Nuclide		Time of Count Activity pCi/g	Uncertainty Counting pCi/g	2 Sigma Total pCi/g	MDA pCi/g
Ac-228		1.2677E+00	2.5921E-01	2.7362E-01	0.846E-01
AM-241	#	6.8083E-02	8.8912E-02	8.9119E-02	0.644E-01
Bi-212	#	1.1973E+00	5.4518E-01	5.5124E-01	0.247E+00
BI-214		8.1066E-01	1.6676E-01	1.7526E-01	0.633E-01
CO-60	#A	-2.2319E-02	1.6605E-01	1.6606E-01	0.212E-01
CS-137	A	3.4749E-03	4.2414E-02	4.2415E-02	0.354E-01
EU-152	A	-1.2818E-01	2.1010E-01	2.1038E-01	0.923E-01
EU-154	A	4.8270E-02	6.7985E-02	6.8108E-02	0.536E-01
K-40		8.0745E+00	1.2555E+00	1.3754E+00	0.257E+00
Pa-234	#C	9.2051E-02	8.2263E-02	8.2657E-02	0.728E-01
Pb-210		1.5401E+00	9.5765E-01	9.6529E-01	0.609E+00
Pb-212		1.0671E+00	1.2138E-01	1.4607E-01	0.635E-01
Pb-214		7.7754E-01	1.3090E-01	1.4232E-01	0.863E-01
RA-226		1.1496E+00	9.9059E-01	9.9440E-01	0.778E+00
Th-230	A	2.4271E+00	7.8644E+00	7.8752E+00	0.640E+01
Th-234		2.2913E+00	1.2040E+00	1.2236E+00	0.103E+01
Tl-208		4.8288E-01	1.0142E-01	1.3367E-01	0.156E-01
U-235	C	7.0426E-02	8.4328E-02	8.4496E-02	0.574E-01

- All peaks for activity calculation had bad shape.
* - Activity omitted from total
& - Activity omitted from total and all peaks had bad shape.
< - MDA value printed.
A - Activity printed, but activity < MDA.
B - Activity < MDA and failed test.
C - Area < Critical level.
F - Failed fraction or key line test.
H - Halflife limit exceeded

---------- S U M M A R Y ----------

Total Activity (36.6 to 2885.2 keV) 1.866E+01 pCi/g

Laboratory: New World Technology

ORTEC g v - i (3263) Npp32 G53W3.10 07-JUL-2010 14:49:24
New World Technology Spectrum name: 1N000843.An1

Sample description
Parcel G 18-PG-C0281-03DUP 388g
7/07/10 08:40

Acquisition information
Start time: 07-Jul-2010 13:57:24
Live time: 2700
Real time: 2702

- -

***** S U M M A R Y O F N U C L I D E S I N S A M P L E *****

Nuclide		Time of Count Activity pCi/g	Uncertainty Counting pCi/g	2 Sigma Total pCi/g	MDA pCi/g
Ac-228		1.2248E+00	2.5984E-01	2.7328E-01	0.996E-01
AM-241	#A	-4.4159E-03	1.7993E-01	1.7993E-01	0.332E-01
Bi-212	#C	2.4581E-01	1.7858E-01	1.7936E-01	0.176E+00
BI-214		7.3657E-01	1.7049E-01	1.7739E-01	0.704E-01
CO-60	#A	2.1947E-02	3.9247E-02	3.9275E-02	0.289E-01
CS-137	A	7.3687E-04	3.4472E-02	3.4472E-02	0.293E-01
EU-152	A	-1.4502E-02	1.4994E-02	1.5044E-02	0.860E-01
EU-154	A	2.7779E-02	4.0142E-02	4.0211E-02	0.427E-01
K-40		7.5822E+00	1.2694E+00	1.3747E+00	0.514E+00
Pa-234	#A	1.3181E-03	7.5869E-03	7.5877E-03	0.427E-01
Pb-210	#A	5.0492E-01	1.0047E+00	1.0055E+00	0.690E+00
Pb-212		1.1709E+00	1.2542E-01	1.5388E-01	0.645E-01
Pb-214		8.2478E-01	1.5044E-01	1.6169E-01	0.694E-01
RA-226		9.6110E-01	9.3147E-01	9.3430E-01	0.736E+00
Th-230	#A	1.3419E+00	6.1480E+00	6.1522E+00	0.490E+01
Th-234	#	2.6836E+00	1.4838E+00	1.5056E+00	0.108E+01
Tl-208		4.2778E-01	8.5606E-02	1.1524E-01	0.676E-01
U-235	A	4.4120E-02	5.9954E-02	6.0047E-02	0.548E-01

- All peaks for activity calculation had bad shape.
* - Activity omitted from total
& - Activity omitted from total and all peaks had bad shape.
< - MDA value printed.
A - Activity printed, but activity < MDA.
B - Activity < MDA and failed test.
C - Area < Critical level.
F - Failed fraction or key line test.
H - Halflife limit exceeded

---------- S U M M A R Y ----------

Total Activity (36.6 to 2885.2 keV) 1.561E+01 pCi/g

Laboratory: New World Technology

ORTEC g v - i (3263) Npp32 G53W3.10 07-JUL-2010 15:05:03
New World Technology Spectrum name: 6N000445.An1

Sample description
Parcel G 18-PG-C0281-04 372g
7/07/10 08:45

Acquisition information
Start time: 07-Jul-2010 13:25:01
Live time: 5400
Real time: 5410

- -

***** S U M M A R Y O F N U C L I D E S I N S A M P L E *****

Nuclide	Time of Count Activity pCi/g	Uncertainty 2 Sigma Counting pCi/g	Total pCi/g	MDA pCi/g
Ac-228	1.1635E+00	1.9329E-01	2.0935E-01	0.996E-01
AM-241 #A	-9.8566E-03	5.7401E-02	5.7401E-02	0.786E-02
Bi-212	6.2067E-01	3.0477E-01	3.0768E-01	0.220E+00
BI-214	8.4433E-01	1.2023E-01	1.3270E-01	0.452E-01
CO-60 #A	1.0786E-02	1.3660E-02	1.3679E-02	0.160E-01
CS-137	4.7902E-02	3.2435E-02	3.2594E-02	0.243E-01
EU-152 A	-6.1715E-02	8.0121E-02	8.0292E-02	0.760E-01
EU-154 #A	3.9579E-02	3.1163E-02	3.1343E-02	0.530E-01
K-40	7.0614E+00	1.0487E+00	1.1581E+00	0.606E+00
Pa-234 C	1.1868E-01	8.4706E-02	8.5342E-02	0.688E-01
Pb-210 #	9.5045E-01	6.4923E-01	6.5344E-01	0.452E+00
Pb-212	1.0128E+00	8.7632E-02	1.1673E-01	0.482E-01
PB-214	7.4443E-01	1.1651E-01	1.2819E-01	0.571E-01
RA-226	1.0160E+00	7.4968E-01	7.5360E-01	0.599E+00
Th-230 #A	7.0746E-01	4.8728E+00	4.8743E+00	0.391E+01
Th-234	1.0229E+00	8.8762E-01	8.9294E-01	0.763E+00
Tl-208	3.2590E-01	5.8870E-02	8.3185E-02	0.425E-01
U-235 C	6.4381E-02	5.0362E-02	5.0597E-02	0.441E-01

- All peaks for activity calculation had bad shape.
* - Activity omitted from total
& - Activity omitted from total and all peaks had bad shape.
< - MDA value printed.
A - Activity printed, but activity < MDA.
B - Activity < MDA and failed test.
C - Area < Critical level.
F - Failed fraction or key line test.
H - Halflife limit exceeded

---------- S U M M A R Y ----------

Total Activity (33.3 to 2659.2 keV) 1.481E+01 pCi/g

Laboratory: New World Technology

ORTEC g v - i (3263) Npp32 G53W3.10 07-JUL-2010 13:29:05
New World Technology Spectrum name: 7N000423.An1

Sample description
Parcel G 18-PG-C0281-05 362g
7/07/10 08:50

Acquisition information
Start time: 07-Jul-2010 12:40:52
Live time: 2700
Real time: 2704

- -

***** S U M M A R Y O F N U C L I D E S I N S A M P L E *****

Nuclide		Time of Count Activity pCi/g	Uncertainty Counting pCi/g	2 Sigma Total pCi/g	MDA pCi/g
Ac-228		9.7489E-01	3.1227E-01	3.1946E-01	0.142E+00
AM-241	#A	3.0753E-02	8.6749E-02	8.6792E-02	0.703E-01
Bi-212	A	1.0753E-01	4.2834E-01	4.2840E-01	0.351E+00
BI-214		5.3398E-01	1.7500E-01	1.7857E-01	0.874E-01
CO-60	#A	2.5679E-03	7.0651E-03	7.0672E-03	0.258E-01
CS-137	A	1.8272E-02	5.6733E-02	5.6746E-02	0.460E-01
EU-152	#A	2.8862E-02	2.8862E-02	2.8966E-02	0.108E+00
EU-154	A	2.0685E-02	8.0560E-02	8.0579E-02	0.730E-01
K-40		7.3078E+00	1.5466E+00	1.6281E+00	0.109E+01
Pa-234		1.3257E-01	1.3721E-01	1.3770E-01	0.108E+00
Pb-210	A	6.6840E-01	9.5670E-01	9.5815E-01	0.710E+00
Pb-212		5.5945E-01	1.2772E-01	1.3464E-01	0.857E-01
PB-214		5.9915E-01	1.6443E-01	1.6997E-01	0.832E-01
RA-226	A	4.2006E-01	1.1964E+00	1.1968E+00	0.982E+00
Th-230	#A	-3.2265E+00	1.6891E+01	1.6900E+01	0.760E+01
Th-234	#A	2.7023E-01	1.5496E+00	1.5498E+00	0.121E+01
Tl-208		2.4042E-01	7.1279E-02	8.3430E-02	0.767E-01
U-235	A	5.7893E-02	8.6235E-02	8.6346E-02	0.676E-01

- All peaks for activity calculation had bad shape.
* - Activity omitted from total
& - Activity omitted from total and all peaks had bad shape.
< - MDA value printed.
A - Activity printed, but activity < MDA.
B - Activity < MDA and failed test.
C - Area < Critical level.
F - Failed fraction or key line test.
H - Halflife limit exceeded

---------- S U M M A R Y ----------

Total Activity (42.2 to 3353.9 keV) 1.022E+01 pCi/g

Laboratory: New World Technology

ORTEC g v - i (3263) Npp32 G53W3.10 07-JUL-2010 13:54:51
New World Technology Spectrum name: 1N000842.An1

Sample description
Parcel G 18-PG-C0281-06 342g
7/07/10 08:55

Acquisition information
Start time: 07-Jul-2010 13:03:24
Live time: 2700
Real time: 2701

- -

***** S U M M A R Y O F N U C L I D E S I N S A M P L E *****

Nuclide		Time of Count Activity pCi/g	Uncertainty Counting pCi/g	2 Sigma Total pCi/g	MDA pCi/g
Ac-228		9.1026E-01	2.7491E-01	2.8202E-01	0.114E+00
AM-241	#A	-9.4559E-03	1.8061E-01	1.8062E-01	0.262E-01
Bi-212		7.3178E-01	4.3228E-01	4.3514E-01	0.287E+00
BI-214		3.8945E-01	1.5736E-01	1.5948E-01	0.938E-01
CO-60	#A	-6.7522E-03	3.9456E-02	3.9458E-02	0.253E-01
CS-137		3.4221E-02	3.4307E-02	3.4384E-02	0.240E-01
EU-152	#A	-1.2738E-01	1.1717E-01	1.1767E-01	0.976E-01
EU-154	C	4.0100E-02	4.2664E-02	4.2799E-02	0.354E-01
K-40		5.0469E+00	1.0913E+00	1.1464E+00	0.275E+00
Pa-234	#A	3.8777E-02	6.2894E-02	6.2985E-02	0.726E-01
Pb-210	#	1.2857E+00	9.2484E-01	9.3036E-01	0.600E+00
Pb-212		7.6885E-01	1.1520E-01	1.2923E-01	0.600E-01
Pb-214		5.9750E-01	1.2943E-01	1.3636E-01	0.728E-01
RA-226		1.0732E+00	9.3750E-01	9.4101E-01	0.732E+00
Th-230	#A	1.8754E+00	5.4718E+00	5.4810E+00	0.422E+01
Th-234	A	6.5815E-01	1.1850E+00	1.1866E+00	0.110E+01
Tl-208		2.6733E-01	5.7740E-02	7.5219E-02	0.177E-01
U-235	#A	-5.9089E-03	5.5197E-02	5.5199E-02	0.580E-01

- All peaks for activity calculation had bad shape.
* - Activity omitted from total
& - Activity omitted from total and all peaks had bad shape.
< - MDA value printed.
A - Activity printed, but activity < MDA.
B - Activity < MDA and failed test.
C - Area < Critical level.
F - Failed fraction or key line test.
H - Halflife limit exceeded

---------- S U M M A R Y ----------

Total Activity (36.6 to 2885.2 keV) 1.107E+01 pCi/g

Laboratory: New World Technology

ORTEC g v - i (3263) Npp32 G53W3.10 07-JUL-2010 14:13:07
New World Technology Spectrum name: 4N000328.An1

Sample description
Parcel G 18-PG-C0281-07 364g
7/07/10 09:00

Acquisition information
Start time: 07-Jul-2010 13:25:58
Live time: 2700
Real time: 2703

- -

***** S U M M A R Y O F N U C L I D E S I N S A M P L E *****

Nuclide		Time of Count Activity pCi/g	Uncertainty Counting pCi/g	2 Sigma Total pCi/g	MDA pCi/g
Ac-228		1.2126E+00	2.2861E-01	2.4348E-01	0.993E-01
AM-241	A	1.4629E-01	7.2855E-01	7.2867E-01	0.596E+00
Bi-212		6.3021E-01	4.2186E-01	4.2403E-01	0.280E+00
BI-214		6.9571E-01	1.6341E-01	1.6984E-01	0.724E-01
CO-60	#A	-2.1824E-02	9.3109E-02	9.3121E-02	0.327E-01
CS-137	A	8.8323E-03	5.3643E-02	5.3647E-02	0.447E-01
EU-152	A	-7.1063E-03	6.3214E-03	6.3501E-03	0.159E+00
EU-154	C	1.9581E-01	1.3877E-01	1.3976E-01	0.749E-01
K-40		9.8703E+00	1.4356E+00	1.5913E+00	0.213E+00
Pa-234	C	1.2167E-01	1.3953E-01	1.3994E-01	0.118E+00
Pb-210	#	0.0000E+00	0.0000E+00	0.0000E+00	0.000E+00
Pb-212		1.0450E+00	1.5787E-01	1.7678E-01	0.838E-01
Pb-214		7.3189E-01	1.5581E-01	1.6445E-01	0.816E-01
RA-226	#A	-3.0501E-02	1.7947E+00	1.7947E+00	0.128E+01
Th-230	#A	-6.3631E+00	5.9175E+01	5.9185E+01	0.298E+02
Th-234	#A	-1.8293E+00	4.5234E+00	4.5268E+00	0.219E+01
Tl-208	C	2.4097E-01	6.5808E-02	7.8862E-02	0.652E-01
U-235		1.2490E-01	1.0672E-01	1.0713E-01	0.761E-01

- All peaks for activity calculation had bad shape.
* - Activity omitted from total
& - Activity omitted from total and all peaks had bad shape.
< - MDA value printed.
A - Activity printed, but activity < MDA.
B - Activity < MDA and failed test.
C - Area < Critical level.
F - Failed fraction or key line test.
H - Halflife limit exceeded

---------- S U M M A R Y ----------

Total Activity (50.9 to 3245.1 keV) 1.419E+01 pCi/g

Laboratory: New World Technology

ORTEC g v - i (3263) Npp32 G53W3.10 07-JUL-2010 14:17:46
New World Technology Spectrum name: 5N000383.An1

Sample description
Parcel G 18-PG-C0281-08 383g
7/07/10 09:15

Acquisition information
Start time: 07-Jul-2010 13:29:12
Live time: 2700
Real time: 2702

- -

***** S U M M A R Y O F N U C L I D E S I N S A M P L E *****

Nuclide	Time of Count Activity pCi/g	Uncertainty 2 Sigma Counting pCi/g	Total pCi/g	MDA pCi/g
Ac-228	1.0246E+00	2.2848E-01	2.3920E-01	0.907E-01
AM-241 #A	2.8261E-02	7.8790E-02	7.8830E-02	0.623E-01
Bi-212 #	5.4817E-01	3.6686E-01	3.6876E-01	0.211E+00
BI-214	8.1895E-01	1.7799E-01	1.8614E-01	0.684E-01
CO-60 #	2.7392E-02	2.3731E-02	2.3804E-02	0.144E-01
CS-137 A	2.8843E-02	3.9020E-02	3.9068E-02	0.295E-01
EU-152 A	8.2266E-02	8.2869E-02	8.3162E-02	0.961E-01
EU-154 C	7.9898E-02	7.7462E-02	7.7757E-02	0.672E-01
K-40	9.0757E+00	1.4915E+00	1.6197E+00	0.860E+00
Pa-234 C	1.0016E-01	9.3457E-02	9.3867E-02	0.648E-01
Pb-210 #	1.0396E+00	8.6816E-01	8.7199E-01	0.630E+00
Pb-212	1.0015E+00	1.2268E-01	1.4445E-01	0.712E-01
Pb-214	7.2243E-01	1.5944E-01	1.6768E-01	0.746E-01
RA-226 A	4.1132E-01	1.0292E+00	1.0297E+00	0.831E+00
Th-230 #A	3.9878E+00	8.6618E+00	8.6881E+00	0.626E+01
Th-234 A	7.1735E-01	1.5791E+00	1.5806E+00	0.117E+01
Tl-208	4.7567E-01	1.1710E-01	1.4516E-01	0.163E-01
U-235 C	6.2271E-02	8.6420E-02	8.6548E-02	0.497E-01

- All peaks for activity calculation had bad shape.
* - Activity omitted from total
& - Activity omitted from total and all peaks had bad shape.
< - MDA value printed.
A - Activity printed, but activity < MDA.
B - Activity < MDA and failed test.
C - Area < Critical level.
F - Failed fraction or key line test.
H - Halflife limit exceeded

---------- S U M M A R Y ----------

Total Activity (37.9 to 3020.7 keV) 1.473E+01 pCi/g

Laboratory: New World Technology

ORTEC g v - i (3263) Npp32 G53W3.10 07-JUL-2010 16:08:36
New World Technology Spectrum name: 7N000424.An1

Sample description
Parcel G 18-PG-C0281-09 378g
7/07/10 09:20

Acquisition information
Start time: 07-Jul-2010 14:28:10
Live time: 5400
Real time: 5407

- -

***** S U M M A R Y O F N U C L I D E S I N S A M P L E *****

Nuclide	Time of Count Activity pCi/g	Uncertainty 2 Sigma Counting pCi/g	Total pCi/g	MDA pCi/g
Ac-228	8.6987E-01	2.5092E-01	2.5802E-01	0.123E+00
AM-241 #A	3.2110E-02	7.3752E-02	7.3808E-02	0.573E-01
Bi-212 #	8.8257E-01	4.6197E-01	4.6586E-01	0.235E+00
BI-214	6.4452E-01	1.0481E-01	1.1324E-01	0.491E-01
CO-60 #C	1.9782E-02	1.2226E-02	1.2299E-02	0.187E-01
CS-137 A	1.0735E-02	3.9326E-02	3.9332E-02	0.324E-01
EU-152 #A	-4.3247E-02	3.8032E-02	3.8209E-02	0.861E-01
EU-154 #A	2.3554E-02	4.3954E-02	4.3999E-02	0.558E-01
K-40	8.1667E+00	1.1588E+00	1.2906E+00	0.761E+00
Pa-234 A	3.7752E-02	3.6083E-02	3.6234E-02	0.871E-01
Pb-210 A	5.3868E-01	7.7463E-01	7.7579E-01	0.547E+00
Pb-212	7.5572E-01	9.6089E-02	1.1200E-01	0.597E-01
PB-214	4.7953E-01	9.8731E-02	1.0457E-01	0.635E-01
RA-226	1.1279E+00	7.9426E-01	7.9882E-01	0.629E+00
Th-230 #A	-8.2153E+00	5.9998E+01	6.0014E+01	0.599E+01
Th-234 A	4.9840E-01	9.6117E-01	9.6234E-01	0.842E+00
Tl-208	2.3139E-01	6.6347E-02	7.8379E-02	0.520E-01
U-235 A	3.9167E-02	5.8997E-02	5.9071E-02	0.445E-01

- All peaks for activity calculation had bad shape.
* - Activity omitted from total
& - Activity omitted from total and all peaks had bad shape.
< - MDA value printed.
A - Activity printed, but activity < MDA.
B - Activity < MDA and failed test.
C - Area < Critical level.
F - Failed fraction or key line test.
H - Halflife limit exceeded

---------- S U M M A R Y ----------

Total Activity (42.2 to 3353.9 keV) 1.316E+01 pCi/g

Laboratory: New World Technology

ORTEC g v - i (3263) Npp32 G53W3.10 07-JUL-2010 15:06:10
New World Technology Spectrum name: 4N000329.An1

Sample description
Parcel G 18-PG-C0281-10 352g
7/07/10 09:25

Acquisition information
Start time: 07-Jul-2010 14:16:32
Live time: 2700
Real time: 2703

- -

***** S U M M A R Y O F N U C L I D E S I N S A M P L E *****

Nuclide	Time of Count Activity pCi/g	Uncertainty 2 Sigma Counting pCi/g	Total pCi/g	MDA pCi/g
Ac-228	8.2624E-01	2.4366E-01	2.5026E-01	0.114E+00
AM-241 #A	-4.6730E-02	1.4413E+00	1.4413E+00	0.325E+00
Bi-212 A	3.1561E-01	4.0178E-01	4.0235E-01	0.330E+00
BI-214	5.8641E-01	1.7082E-01	1.7521E-01	0.679E-01
CO-60 #A	-3.8228E-02	1.0998E+00	1.0998E+00	0.327E-01
CS-137	6.1123E-02	4.5859E-02	4.6043E-02	0.310E-01
EU-152 A	-1.5008E-01	2.5514E-01	2.5546E-01	0.138E+00
EU-154 C	1.0145E-01	8.4240E-02	8.4677E-02	0.699E-01
K-40	1.0956E+01	1.5341E+00	1.7129E+00	0.221E+00
Pa-234 A	1.4725E-01	1.2705E-01	1.2770E-01	0.170E+00
Pb-210 #	0.0000E+00	0.0000E+00	0.0000E+00	0.000E+00
Pb-212	5.5593E-01	1.2569E-01	1.3262E-01	0.859E-01
Pb-214	5.7822E-01	1.4616E-01	1.5195E-01	0.830E-01
RA-226 A	9.3555E-01	1.1831E+00	1.1852E+00	0.947E+00
Th-230 #A	-2.4037E+01	4.6710E+02	4.6712E+02	0.336E+02
Th-234 #A	-3.9142E+00	1.0008E+01	1.0015E+01	0.206E+01
Tl-208 #C	2.5486E-01	8.0159E-02	9.2401E-02	0.389E-01
U-235 #A	-1.3139E-02	1.3582E-02	1.3618E-02	0.803E-01

- All peaks for activity calculation had bad shape.
* - Activity omitted from total
& - Activity omitted from total and all peaks had bad shape.
< - MDA value printed.
A - Activity printed, but activity < MDA.
B - Activity < MDA and failed test.
C - Area < Critical level.
F - Failed fraction or key line test.
H - Halflife limit exceeded

---------- S U M M A R Y ----------

Total Activity (50.9 to 3245.1 keV) 1.356E+01 pCi/g

Laboratory: New World Technology

ORTEC g v - i (3263) Npp32 G53W3.10 07-JUL-2010 16:45:00
New World Technology Spectrum name: 5N000384.An1

Sample description
Parcel G 18-PG-C0281-11 396g
7/07/10 09:30

Acquisition information
Start time: 07-Jul-2010 15:10:22
Live time: 5400
Real time: 5404

- -

***** S U M M A R Y O F N U C L I D E S I N S A M P L E *****

Nuclide	Time of Count Activity pCi/g	Uncertainty 2 Sigma Counting pCi/g	Total pCi/g	MDA pCi/g
Ac-228	9.1347E-01	1.9740E-01	2.0725E-01	0.108E+00
AM-241 #A	-7.0689E-03	3.9888E-01	3.9888E-01	0.223E-01
Bi-212	8.9092E-01	3.5305E-01	3.5823E-01	0.181E+00
BI-214	7.8433E-01	1.3750E-01	1.4707E-01	0.556E-01
CO-60 #	3.8105E-02	4.6690E-02	4.6761E-02	0.250E-01
CS-137	4.5565E-02	3.3401E-02	3.3541E-02	0.248E-01
EU-152 C	7.6612E-02	5.8167E-02	5.8529E-02	0.474E-01
EU-154 A	2.6681E-02	4.2047E-02	4.2108E-02	0.343E-01
K-40	5.5799E+00	8.7847E-01	9.6042E-01	0.590E+00
Pa-234 #	1.4458E-01	7.5388E-02	7.6443E-02	0.749E-01
Pb-210	4.2238E-01	5.2238E-01	5.2343E-01	0.414E+00
Pb-212	8.9384E-01	8.6847E-02	1.1034E-01	0.492E-01
Pb-214	6.4806E-01	1.1081E-01	1.2019E-01	0.540E-01
RA-226	1.0577E+00	7.1366E-01	7.1813E-01	0.556E+00
Th-230 A	2.5138E+00	5.5223E+00	5.5388E+00	0.448E+01
Th-234 #A	-4.3542E-01	1.1442E+00	1.1450E+00	0.777E+00
Tl-208	5.4322E-01	8.5624E-02	1.3011E-01	0.786E-02
U-235	6.6250E-02	6.1240E-02	6.1444E-02	0.376E-01

- All peaks for activity calculation had bad shape.
* - Activity omitted from total
& - Activity omitted from total and all peaks had bad shape.
< - MDA value printed.
A - Activity printed, but activity < MDA.
B - Activity < MDA and failed test.
C - Area < Critical level.
F - Failed fraction or key line test.
H - Halflife limit exceeded

---------- S U M M A R Y ----------

Total Activity (37.9 to 3020.7 keV) 1.150E+01 pCi/g

Laboratory: New World Technology

ORTEC g v - i (3263) Npp32 G53W3.10 07-JUL-2010 15:41:32
New World Technology Spectrum name: 1N000844.An1

Sample description
Parcel G 18-PG-C0281-12 366g
7/07/10 09:35

Acquisition information
Start time: 07-Jul-2010 14:52:40
Live time: 2700
Real time: 2701

- -

***** S U M M A R Y O F N U C L I D E S I N S A M P L E *****

Nuclide	Time of Count Activity pCi/g	Uncertainty 2 Sigma Counting pCi/g	Total pCi/g	MDA pCi/g
Ac-228	6.9472E-01	2.0480E-01	2.1035E-01	0.101E+00
AM-241 #A	2.1803E-02	5.2704E-02	5.2740E-02	0.422E-01
Bi-212 #	7.0077E-01	5.0332E-01	5.0557E-01	0.198E+00
BI-214	4.3012E-01	1.1932E-01	1.2270E-01	0.392E-01
CO-60 #A	1.0253E-02	2.2307E-02	2.2318E-02	0.214E-01
CS-137 A	6.8707E-03	2.7524E-02	2.7528E-02	0.229E-01
EU-152 #A	-1.3176E-01	1.4007E-01	1.4051E-01	0.784E-01
EU-154 A	1.5526E-02	5.0867E-02	5.0884E-02	0.408E-01
K-40	5.8838E+00	1.1175E+00	1.1901E+00	0.292E+00
Pa-234 #C	1.0686E-01	7.2257E-02	7.2860E-02	0.629E-01
Pb-210 A	4.4501E-01	6.9733E-01	6.9821E-01	0.579E+00
Pb-212	5.1539E-01	9.3116E-02	1.0105E-01	0.494E-01
Pb-214	4.1908E-01	1.3754E-01	1.4080E-01	0.650E-01
RA-226	7.0745E-01	8.4260E-01	8.4430E-01	0.672E+00
Th-230 #A	1.4019E+00	6.1609E+00	6.1655E+00	0.451E+01
Th-234 A	1.0998E-01	1.0747E+00	1.0748E+00	0.102E+01
Tl-208 C	1.4744E-01	4.6206E-02	5.3310E-02	0.462E-01
U-235 C	8.0153E-02	7.4433E-02	7.4679E-02	0.479E-01

- All peaks for activity calculation had bad shape.
* - Activity omitted from total
& - Activity omitted from total and all peaks had bad shape.
< - MDA value printed.
A - Activity printed, but activity < MDA.
B - Activity < MDA and failed test.
C - Area < Critical level.
F - Failed fraction or key line test.
H - Halflife limit exceeded

---------- S U M M A R Y ----------

Total Activity (36.6 to 2885.2 keV) 8.644E+00 pCi/g

Laboratory: New World Technology

ORTEC g v - i (3263) Npp32 G53W3.10 07-JUL-2010 17:18:36
New World Technology Spectrum name: 2N000520.An1

Sample description
Parcel G 18-PG-C0281-13 384g
7/07/10 09:40

Acquisition information
Start time: 07-Jul-2010 15:46:37
Live time: 5400
Real time: 5409

- -

***** S U M M A R Y O F N U C L I D E S I N S A M P L E *****

Nuclide		Time of Count Activity pCi/g	Uncertainty Counting pCi/g	2 Sigma Total pCi/g	MDA pCi/g
Ac-228		1.1206E+00	1.5761E-01	1.7561E-01	0.113E+00
AM-241	#A	1.1971E-01	3.8664E-01	3.8679E-01	0.268E+00
Bi-212		9.5289E-01	3.2524E-01	3.3165E-01	0.223E+00
BI-214		1.0236E+00	1.3623E-01	1.5230E-01	0.568E-01
CO-60	#A	-2.0351E-02	6.7164E-02	6.7178E-02	0.242E-01
CS-137		8.1680E-02	3.8358E-02	3.8749E-02	0.268E-01
EU-152	A	-6.4608E-02	5.7046E-02	5.7308E-02	0.109E+00
EU-154	C	1.0238E-01	8.8377E-02	8.8802E-02	0.657E-01
K-40		8.8379E+00	1.0665E+00	1.2311E+00	0.709E+00
Pa-234	A	5.8352E-02	1.2599E-01	1.2610E-01	0.117E+00
Pb-210	#C	0.0000E+00	2.0651E+00	2.0651E+00	0.000E+00
Pb-212		1.1878E+00	1.0616E-01	1.3946E-01	0.613E-01
PB-214		9.2652E-01	1.1244E-01	1.3067E-01	0.627E-01
RA-226		1.0933E+00	9.1074E-01	9.1448E-01	0.732E+00
Th-230	#A	-1.1547E+01	2.4725E+02	2.4726E+02	0.106E+02
Th-234		1.8112E+00	1.3390E+00	1.3500E+00	0.109E+01
Tl-208		3.7078E-01	6.1883E-02	6.6578E-02	0.318E-01
U-235	C	5.5256E-02	8.2048E-02	8.2154E-02	0.469E-01

- All peaks for activity calculation had bad shape.
* - Activity omitted from total
& - Activity omitted from total and all peaks had bad shape.
< - MDA value printed.
A - Activity printed, but activity < MDA.
B - Activity < MDA and failed test.
C - Area < Critical level.
F - Failed fraction or key line test.
H - Halflife limit exceeded

---------- S U M M A R Y ----------

Total Activity (32.4 to 2597.5 keV) 1.741E+01 pCi/g

Laboratory: New World Technology

ORTEC g v - i (3263) Npp32 G53W3.10 07-JUL-2010 15:48:46
New World Technology Spectrum name: 3N000596.An1

Sample description
Parcel G 18-PG-C0281-14 382g
7/07/10 09:45

Acquisition information
Start time: 07-Jul-2010 15:02:40
Live time: 2700
Real time: 2703

- -

***** S U M M A R Y O F N U C L I D E S I N S A M P L E *****

Nuclide	Time of Count Activity pCi/g	Uncertainty Counting pCi/g	2 Sigma Total pCi/g	MDA pCi/g
Ac-228	8.4606E-01	2.4666E-01	2.5350E-01	0.114E+00
AM-241 #	1.1418E-01	1.0776E-01	1.0824E-01	0.756E-01
Bi-212	6.5076E-01	5.0934E-01	5.1126E-01	0.273E+00
BI-214	7.4419E-01	1.6918E-01	1.7628E-01	0.601E-01
CO-60 #A	1.2243E-02	4.1405E-02	4.1414E-02	0.351E-01
CS-137 A	3.9376E-02	5.1536E-02	5.1604E-02	0.395E-01
EU-152 A	-8.6822E-02	7.0360E-02	7.0744E-02	0.121E+00
EU-154 #A	4.9100E-02	8.8773E-02	8.8870E-02	0.620E-01
K-40	1.3678E+01	1.5416E+00	1.8116E+00	0.303E+00
Pa-234 #	2.2484E-01	1.5353E-01	1.5479E-01	0.103E+00
Pb-210 #	1.0949E+00	1.2044E+00	1.2075E+00	0.786E+00
Pb-212	5.8238E-01	1.2414E-01	1.3182E-01	0.787E-01
PB-214	5.1607E-01	1.2851E-01	1.3375E-01	0.812E-01
RA-226 A	2.8671E-01	1.2686E+00	1.2688E+00	0.105E+01
Th-230 #A	-6.5350E+00	3.1110E+01	3.1130E+01	0.750E+01
Th-234 #A	-1.1166E-01	1.9700E+00	1.9700E+00	0.139E+01
Tl-208	2.1640E-01	8.6221E-02	9.4641E-02	0.497E-01
U-235	1.0168E-01	7.8574E-02	7.8949E-02	0.635E-01

- All peaks for activity calculation had bad shape.
* - Activity omitted from total
& - Activity omitted from total and all peaks had bad shape.
< - MDA value printed.
A - Activity printed, but activity < MDA.
B - Activity < MDA and failed test.
C - Area < Critical level.
F - Failed fraction or key line test.
H - Halflife limit exceeded

---------- S U M M A R Y ----------

Total Activity (34.9 to 2779.2 keV) 1.767E+01 pCi/g

Laboratory: New World Technology

ORTEC g v - i (3263) Npp32 G53W3.10 07-JUL-2010 17:30:00
New World Technology Spectrum name: 4N000330.An1

Sample description
Parcel G 18-PG-C0281-15 397g
7/07/10 09:50

Acquisition information
Start time: 07-Jul-2010 15:57:32
Live time: 5400
Real time: 5406

- -

***** S U M M A R Y O F N U C L I D E S I N S A M P L E *****

Nuclide		Time of Count Activity pCi/g	Uncertainty 2 Sigma Counting pCi/g	Total pCi/g	MDA pCi/g
Ac-228		9.4858E-01	1.9843E-01	2.0897E-01	0.122E+00
AM-241	A	4.0152E-01	5.3709E-01	5.3828E-01	0.430E+00
Bi-212		8.6002E-01	2.9237E-01	2.9818E-01	0.171E+00
BI-214		9.3860E-01	1.4970E-01	1.6220E-01	0.638E-01
CO-60	A	-8.8190E-03	1.4101E-02	1.4113E-02	0.207E-01
CS-137	#A	-7.7809E-03	9.5163E-02	9.5164E-02	0.213E-01
EU-152	A	3.1848E-03	2.4038E-03	2.4189E-03	0.954E-01
EU-154	C	9.6223E-02	1.0019E-01	1.0052E-01	0.619E-01
K-40		7.0826E+00	9.6129E-01	1.0802E+00	0.635E+00
Pa-234	A	1.2013E-01	1.1486E-01	1.1534E-01	0.134E+00
Pb-210	#	0.0000E+00	0.0000E+00	0.0000E+00	0.000E+00
Pb-212		1.2005E+00	1.1430E-01	1.4635E-01	0.653E-01
Pb-214		8.1854E-01	1.5453E-01	1.6534E-01	0.779E-01
RA-226		1.1156E+00	9.3226E-01	9.3607E-01	0.746E+00
Th-230	#A	-1.9194E+01	2.1833E+02	2.1835E+02	0.251E+02
Th-234	#A	-1.2431E+00	2.6458E+00	2.6484E+00	0.150E+01
Tl-208	C	3.0226E-01	4.5394E-02	7.0936E-02	0.530E-01
U-235	#A	-6.6931E-02	3.0933E-01	3.0937E-01	0.565E-01

- All peaks for activity calculation had bad shape.
* - Activity omitted from total
& - Activity omitted from total and all peaks had bad shape.
< - MDA value printed.
A - Activity printed, but activity < MDA.
B - Activity < MDA and failed test.
C - Area < Critical level.
F - Failed fraction or key line test.
H - Halflife limit exceeded

---------- S U M M A R Y ----------

Total Activity (50.9 to 3245.1 keV) 1.296E+01 pCi/g

Laboratory: New World Technology

ORTEC g v - i (3263) Npp32 G53W3.10 07-JUL-2010 15:54:14
New World Technology Spectrum name: 6N000446.An1

Sample description
Parcel G 18-PG-C0281-16 347g
7/07/10 09:55

Acquisition information
Start time: 07-Jul-2010 15:08:59
Live time: 2700
Real time: 2705

- -

***** S U M M A R Y O F N U C L I D E S I N S A M P L E *****

Nuclide		Time of Count Activity pCi/g	Uncertainty 2 Sigma Counting pCi/g	Total pCi/g	MDA pCi/g
Ac-228		8.8470E-01	2.9374E-01	3.0003E-01	0.135E+00
AM-241	A	2.9135E-03	1.0438E-01	1.0438E-01	0.863E-01
Bi-212	#	8.6486E-01	4.0444E-01	4.0870E-01	0.204E+00
BI-214		7.7387E-01	1.7096E-01	1.7854E-01	0.677E-01
CO-60	#A	5.9311E-03	6.8791E-03	6.8908E-03	0.174E-01
CS-137	A	3.1775E-02	5.0757E-02	5.0802E-02	0.403E-01
EU-152	#A	-2.6185E-01	1.0474E+01	1.0474E+01	0.954E-01
EU-154	C	9.4039E-02	7.2129E-02	7.2567E-02	0.583E-01
K-40	#	7.8914E+00	1.5226E+00	1.6186E+00	0.889E+00
Pa-234	#	1.2502E-01	1.1905E-01	1.1955E-01	0.892E-01
Pb-210		1.1366E+00	8.1506E-01	8.1985E-01	0.636E+00
Pb-212		6.8182E-01	1.0895E-01	1.2068E-01	0.656E-01
PB-214		7.1308E-01	1.6434E-01	1.7214E-01	0.739E-01
RA-226		1.1333E+00	1.0604E+00	1.0638E+00	0.842E+00
Th-230	#A	3.4777E-01	4.3415E+00	4.3419E+00	0.399E+01
Th-234	A	4.1575E-01	1.6584E+00	1.6589E+00	0.117E+01
Tl-208		3.6104E-01	1.1356E-01	1.3090E-01	0.645E-01
U-235	C	6.8180E-02	9.0747E-02	9.0893E-02	0.575E-01

- All peaks for activity calculation had bad shape.
* - Activity omitted from total
& - Activity omitted from total and all peaks had bad shape.
< - MDA value printed.
A - Activity printed, but activity < MDA.
B - Activity < MDA and failed test.
C - Area < Critical level.
F - Failed fraction or key line test.
H - Halflife limit exceeded

---------- S U M M A R Y ----------

Total Activity (33.3 to 2659.2 keV) 1.457E+01 pCi/g

Laboratory: New World Technology

ORTEC g v - i (3263) Npp32 G53W3.10 07-JUL-2010 16:37:40
New World Technology Spectrum name: 1N000845.An1

Sample description
Parcel G 18-PG-C0281-17 370g
7/07/10 10:00

Acquisition information
Start time: 07-Jul-2010 15:44:18
Live time: 2700
Real time: 2701

- -

***** S U M M A R Y O F N U C L I D E S I N S A M P L E *****

Nuclide		Time of Count Activity pCi/g	Uncertainty 2 Sigma Counting pCi/g	Total pCi/g	MDA pCi/g
Ac-228		1.0983E+00	2.0472E-01	2.1834E-01	0.116E+00
AM-241	A	2.2994E-02	8.3535E-02	8.3560E-02	0.680E-01
Bi-212		6.7884E-01	3.5447E-01	3.5747E-01	0.217E+00
BI-214		7.9935E-01	1.7402E-01	1.8196E-01	0.631E-01
CO-60	#A	-2.2234E-02	2.8865E-01	2.8866E-01	0.217E-01
CS-137	A	1.2079E-02	3.2114E-02	3.2124E-02	0.258E-01
EU-152	#A	-8.2949E-02	1.5312E-01	1.5328E-01	0.903E-01
EU-154	C	5.3350E-02	5.3675E-02	5.3865E-02	0.356E-01
K-40		8.8381E+00	1.2325E+00	1.3774E+00	0.128E+00
Pa-234	C	1.0411E-01	8.0093E-02	8.0610E-02	0.683E-01
Pb-210		8.1920E-01	7.4312E-01	7.4591E-01	0.596E+00
Pb-212		8.2784E-01	1.2071E-01	1.3617E-01	0.686E-01
Pb-214		6.3669E-01	1.2789E-01	1.3582E-01	0.734E-01
RA-226		1.0533E+00	1.0298E+00	1.0328E+00	0.815E+00
Th-230	#A	3.9360E+00	5.1593E+00	5.2022E+00	0.402E+01
Th-234		1.1135E+00	1.2337E+00	1.2382E+00	0.110E+01
Tl-208	#	3.1329E-01	6.1782E-02	8.3720E-02	0.164E-01
U-235	C	7.8510E-02	9.4307E-02	9.4494E-02	0.563E-01

- All peaks for activity calculation had bad shape.
* - Activity omitted from total
& - Activity omitted from total and all peaks had bad shape.
< - MDA value printed.
A - Activity printed, but activity < MDA.
B - Activity < MDA and failed test.
C - Area < Critical level.
F - Failed fraction or key line test.
H - Halflife limit exceeded

---------- S U M M A R Y ----------

Total Activity (36.6 to 2885.2 keV) 1.506E+01 pCi/g

Laboratory: New World Technology

ORTEC g v - i (3263) Npp32 G53W3.10 07-JUL-2010 16:43:21
New World Technology Spectrum name: 3N000597.An1

Sample description
Parcel G 18-PG-C0281-18 355g
7/07/10 10:05

Acquisition information
Start time: 07-Jul-2010 15:51:32
Live time: 2700
Real time: 2702

- -

***** S U M M A R Y O F N U C L I D E S I N S A M P L E *****

Nuclide		Time of Count Activity pCi/g	Uncertainty 2 Sigma Counting pCi/g	Total pCi/g	MDA pCi/g
Ac-228		5.1812E-01	2.2828E-01	2.3107E-01	0.133E+00
AM-241	A	6.6195E-02	1.1730E-01	1.1745E-01	0.942E-01
Bi-212		3.9970E-01	4.2261E-01	4.2348E-01	0.322E+00
BI-214		6.0068E-01	1.7368E-01	1.7822E-01	0.664E-01
CO-60	#A	2.3912E-02	3.1825E-02	3.1866E-02	0.394E-01
CS-137	A	4.0658E-02	5.6319E-02	5.6385E-02	0.434E-01
EU-152	A	-3.9906E-02	3.3100E-02	3.3272E-02	0.134E+00
EU-154	#A	4.9398E-02	3.6485E-02	3.6724E-02	0.595E-01
K-40		8.7788E+00	1.3510E+00	1.4826E+00	0.486E+00
Pa-234	#A	3.3295E-02	8.2311E-02	8.2363E-02	0.769E-01
Pb-210	#A	-2.1196E-01	1.2662E+00	1.2663E+00	0.728E+00
Pb-212		4.6224E-01	1.1217E-01	1.1756E-01	0.721E-01
PB-214		4.1361E-01	1.5031E-01	1.5322E-01	0.804E-01
RA-226	A	2.8898E-01	1.2624E+00	1.2626E+00	0.105E+01
Th-230	#A	-9.5062E+00	3.5113E+01	3.5150E+01	0.585E+01
Th-234	#	1.6290E+00	1.9123E+00	1.9186E+00	0.136E+01
Tl-208		2.1064E-01	8.0956E-02	8.9425E-02	0.535E-01
U-235	C	1.1381E-01	1.2032E-01	1.2063E-01	0.681E-01

- All peaks for activity calculation had bad shape.
* - Activity omitted from total
& - Activity omitted from total and all peaks had bad shape.
< - MDA value printed.
A - Activity printed, but activity < MDA.
B - Activity < MDA and failed test.
C - Area < Critical level.
F - Failed fraction or key line test.
H - Halflife limit exceeded

---------- S U M M A R Y ----------

Total Activity (34.9 to 2779.2 keV) 1.098E+01 pCi/g

Laboratory: New World Technology

ORTEC g v - i (3263) Npp32 G53W3.10 07-JUL-2010 18:56:27
New World Technology Spectrum name: 6N000447.An1

Sample description
Parcel G 18-PG-C0281-19 382g
7/07/10 10:10

Acquisition information
Start time: 07-Jul-2010 17:21:37
Live time: 5400
Real time: 5410

- -

***** S U M M A R Y O F N U C L I D E S I N S A M P L E *****

Nuclide	Time of Count Activity pCi/g	Uncertainty 2 Sigma Counting pCi/g	Total pCi/g	MDA pCi/g
Ac-228	1.1919E+00	1.5382E-01	1.7448E-01	0.927E-01
AM-241 #A	5.0213E-02	9.1222E-02	9.1331E-02	0.629E-01
Bi-212	6.3146E-01	3.1382E-01	3.1675E-01	0.225E+00
BI-214	9.4915E-01	1.4140E-01	1.5486E-01	0.577E-01
CO-60 #A	2.7047E-03	4.4598E-03	4.4635E-03	0.147E-01
CS-137	2.7664E-02	3.2078E-02	3.2132E-02	0.255E-01
EU-152 C	1.9391E-01	9.8070E-02	9.9438E-02	0.789E-01
EU-154 C	6.7077E-02	5.2070E-02	5.2379E-02	0.533E-01
K-40	8.1246E+00	9.7123E-01	1.1237E+00	0.599E+00
Pa-234	1.3048E-01	9.2662E-02	9.3364E-02	0.729E-01
Pb-210	8.8633E-01	8.7802E-01	8.8072E-01	0.561E+00
Pb-212	1.2187E+00	9.1983E-02	1.3066E-01	0.460E-01
PB-214	7.2893E-01	9.0534E-02	1.0459E-01	0.719E-01
RA-226	1.3468E+00	7.5926E-01	7.6606E-01	0.599E+00
Th-230 #	6.4146E+00	6.8924E+00	6.9776E+00	0.478E+01
Th-234 A	7.6033E-01	9.2894E-01	9.3175E-01	0.799E+00
Tl-208	4.1211E-01	5.3333E-02	9.1475E-02	0.414E-01
U-235 C	5.4571E-02	6.2439E-02	6.2575E-02	0.409E-01

- All peaks for activity calculation had bad shape.
* - Activity omitted from total
& - Activity omitted from total and all peaks had bad shape.
< - MDA value printed.
A - Activity printed, but activity < MDA.
B - Activity < MDA and failed test.
C - Area < Critical level.
F - Failed fraction or key line test.
H - Halflife limit exceeded

---------- S U M M A R Y ----------

Total Activity (33.3 to 2659.2 keV) 1.562E+01 pCi/g

Laboratory: New World Technology

ORTEC g v - i (3263) Npp32 G53W3.10 07-JUL-2010 17:16:13
New World Technology Spectrum name: 7N000425.An1

Sample description
Parcel G 18-PG-C0281-20 389g
7/07/10 10:15

Acquisition information
Start time: 07-Jul-2010 16:11:29
Live time: 2700
Real time: 2703

- -

***** S U M M A R Y O F N U C L I D E S I N S A M P L E *****

Nuclide		Time of Count Activity pCi/g	Uncertainty Counting pCi/g	2 Sigma Total pCi/g	MDA pCi/g
Ac-228	C	7.5218E-01	2.3114E-01	2.3691E-01	0.301E+00
AM-241	#A	1.1564E-02	7.5227E-02	7.5234E-02	0.650E-01
Bi-212		1.0939E+00	6.4646E-01	6.5073E-01	0.346E+00
BI-214		7.8489E-01	1.7274E-01	1.8045E-01	0.908E-01
CO-60	#A	2.0253E-03	3.1779E-03	3.1808E-03	0.210E-01
CS-137	A	1.6881E-02	4.9280E-02	4.9293E-02	0.398E-01
EU-152	#A	6.5599E-02	5.6984E-02	5.7255E-02	0.105E+00
EU-154	#C	1.4505E-01	1.0503E-01	1.0575E-01	0.333E-01
K-40		7.2847E+00	1.5092E+00	1.5921E+00	0.103E+01
Pa-234		1.8627E-01	1.6148E-01	1.6231E-01	0.121E+00
Pb-210	#A	6.3320E-01	9.9840E-01	9.9965E-01	0.739E+00
Pb-212		1.2039E+00	1.4803E-01	1.7411E-01	0.827E-01
PB-214		8.7888E-01	1.8675E-01	1.9713E-01	0.881E-01
RA-226	A	8.2608E-01	1.2966E+00	1.2981E+00	0.105E+01
Th-230	#A	-3.6195E+00	1.9240E+01	1.9249E+01	0.762E+01
Th-234		1.3471E+00	1.4342E+00	1.4399E+00	0.122E+01
Tl-208		4.2991E-01	9.3571E-02	1.2152E-01	0.714E-01
U-235	A	7.0480E-02	9.9857E-02	9.9999E-02	0.720E-01

- All peaks for activity calculation had bad shape.
* - Activity omitted from total
& - Activity omitted from total and all peaks had bad shape.
< - MDA value printed.
A - Activity printed, but activity < MDA.
B - Activity < MDA and failed test.
C - Area < Critical level.
F - Failed fraction or key line test.
H - Halflife limit exceeded

---------- S U M M A R Y ----------

Total Activity (42.2 to 3353.9 keV) 1.186E+01 pCi/g

Laboratory: New World Technology

ORTEC g v - i (3263) Npp32 G53W3.10 07-JUL-2010 17:35:06
New World Technology Spectrum name: 1N000846.An1

Sample description
Parcel G 18-PG-C0281-21 397g
7/07/10 10:20

Acquisition information
Start time: 07-Jul-2010 16:41:03
Live time: 2700
Real time: 2701

- -

***** S U M M A R Y O F N U C L I D E S I N S A M P L E *****

Nuclide	Time of Count Activity pCi/g	Uncertainty 2 Sigma Counting pCi/g	Total pCi/g	MDA pCi/g
Ac-228	8.8078E-01	2.2585E-01	2.3390E-01	0.878E-01
AM-241 #A	1.6271E-02	5.9227E-02	5.9244E-02	0.493E-01
Bi-212	6.2507E-01	3.5795E-01	3.6047E-01	0.233E+00
BI-214	6.8979E-01	1.4161E-01	1.4886E-01	0.493E-01
CO-60 #A	-8.6957E-04	1.6908E-03	1.6918E-03	0.224E-01
CS-137 A	2.6866E-02	4.8762E-02	4.8796E-02	0.383E-01
EU-152 A	-8.5015E-02	1.0538E-01	1.0563E-01	0.748E-01
EU-154 C	6.4155E-02	5.8245E-02	5.8498E-02	0.441E-01
K-40	7.7802E+00	1.3206E+00	1.4272E+00	0.405E+00
Pa-234 #C	9.5997E-02	6.3655E-02	6.4207E-02	0.427E-01
Pb-210	6.0801E-01	6.7117E-01	6.7287E-01	0.546E+00
Pb-212	7.3416E-01	1.0838E-01	1.2194E-01	0.591E-01
Pb-214	4.9871E-01	1.1208E-01	1.1766E-01	0.626E-01
RA-226 A	6.6456E-01	8.9755E-01	8.9895E-01	0.721E+00
Th-230 #A	1.9577E+00	5.1704E+00	5.1811E+00	0.417E+01
Th-234 #	2.3951E+00	1.2503E+00	1.2709E+00	0.951E+00
Tl-208 #	2.9179E-01	5.4909E-02	7.6051E-02	0.153E-01
U-235 C	5.8976E-02	6.2823E-02	6.2981E-02	0.496E-01

- All peaks for activity calculation had bad shape.
* - Activity omitted from total
& - Activity omitted from total and all peaks had bad shape.
< - MDA value printed.
A - Activity printed, but activity < MDA.
B - Activity < MDA and failed test.
C - Area < Critical level.
F - Failed fraction or key line test.
H - Halflife limit exceeded

---------- S U M M A R Y ----------

Total Activity (36.6 to 2885.2 keV) 1.390E+01 pCi/g

Laboratory: New World Technology

ORTEC g v - i (3263) Npp32 G53W3.10 07-JUL-2010 17:35:00
New World Technology Spectrum name: 5N000385.An1

Sample description
Parcel G 18-PG-C0281-22 401g
7/07/10 10:25

Acquisition information
Start time: 07-Jul-2010 16:48:26
Live time: 2700
Real time: 2702

- -

***** S U M M A R Y O F N U C L I D E S I N S A M P L E *****

Nuclide	Time of Count Activity pCi/g	Uncertainty 2 Sigma Counting pCi/g	Total pCi/g	MDA pCi/g
Ac-228	8.8601E-01	2.1581E-01	2.2433E-01	0.108E+00
AM-241 #A	2.3502E-02	8.4828E-02	8.4854E-02	0.659E-01
Bi-212	4.3566E-01	3.6227E-01	3.6348E-01	0.265E+00
BI-214	7.6019E-01	1.5646E-01	1.6443E-01	0.596E-01
CO-60 A	2.9016E-03	1.8751E-02	1.8752E-02	0.272E-01
CS-137 A	2.3334E-02	4.0995E-02	4.1025E-02	0.320E-01
EU-152 A	5.2919E-02	4.8887E-02	4.9093E-02	0.902E-01
EU-154 C	8.9482E-02	9.4746E-02	9.5048E-02	0.619E-01
K-40	1.2444E+01	1.5544E+00	1.7793E+00	0.794E+00
Pa-234 #C	8.2621E-02	5.7007E-02	5.7465E-02	0.773E-01
Pb-210	1.0098E+00	7.0469E-01	7.0913E-01	0.572E+00
Pb-212	7.2250E-01	1.1386E-01	1.2645E-01	0.692E-01
Pb-214	6.3026E-01	1.2771E-01	1.3550E-01	0.634E-01
RA-226 A	2.9028E-01	1.0445E+00	1.0448E+00	0.849E+00
Th-230 #A	5.5221E+00	8.8018E+00	8.8514E+00	0.620E+01
Th-234 #A	9.3276E-01	1.5106E+00	1.5132E+00	0.110E+01
Tl-208	4.0650E-01	1.0409E-01	1.2732E-01	0.155E-01
U-235	8.5974E-02	6.4703E-02	6.5029E-02	0.478E-01

- All peaks for activity calculation had bad shape.
* - Activity omitted from total
& - Activity omitted from total and all peaks had bad shape.
< - MDA value printed.
A - Activity printed, but activity < MDA.
B - Activity < MDA and failed test.
C - Area < Critical level.
F - Failed fraction or key line test.
H - Halflife limit exceeded

---------- S U M M A R Y ----------

Total Activity (37.9 to 3020.7 keV) 1.738E+01 pCi/g

Laboratory: New World Technology

ORTEC g v - i (3263) Npp32 G53W3.10 07-JUL-2010 19:09:52
New World Technology Spectrum name: 3N000598.An1

Sample description
Parcel G 18-PG-C0281-23 378g
7/07/10 10:30

Acquisition information
Start time: 07-Jul-2010 17:38:40
Live time: 5400
Real time: 5405

- -

***** S U M M A R Y O F N U C L I D E S I N S A M P L E *****

Nuclide		Time of Count Activity pCi/g	Uncertainty Counting pCi/g	2 Sigma Total pCi/g	MDA pCi/g
Ac-228		9.9450E-01	1.6624E-01	1.7988E-01	0.995E-01
AM-241	A	4.6482E-02	8.8938E-02	8.9035E-02	0.723E-01
Bi-212		8.5680E-01	3.1593E-01	3.2127E-01	0.213E+00
BI-214		8.7638E-01	1.2502E-01	1.3794E-01	0.525E-01
CO-60	#A	-4.4085E-02	4.0180E+00	4.0180E+00	0.228E-01
CS-137	A	1.3330E-02	3.2552E-02	3.2564E-02	0.264E-01
EU-152	#A	-1.1433E-01	1.1386E-01	1.1427E-01	0.996E-01
EU-154	A	3.9728E-02	7.0869E-02	7.0949E-02	0.507E-01
K-40		1.0974E+01	1.0325E+00	1.2841E+00	0.239E+00
Pa-234	C	1.1568E-01	9.4711E-02	9.5251E-02	0.898E-01
Pb-210	A	4.8679E-01	6.8694E-01	6.8800E-01	0.578E+00
Pb-212		1.2023E+00	1.0530E-01	1.3953E-01	0.594E-01
PB-214		8.3895E-01	1.0824E-01	1.2388E-01	0.593E-01
RA-226		1.0224E+00	9.4286E-01	9.4603E-01	0.764E+00
Th-230	#A	-1.1843E+01	3.2876E+02	3.2877E+02	0.422E+01
Th-234		1.9824E+00	1.1014E+00	1.1175E+00	0.961E+00
Tl-208		5.0368E-01	9.0691E-02	1.2836E-01	0.355E-01
U-235	C	6.1856E-02	9.5151E-02	9.5266E-02	0.512E-01

- All peaks for activity calculation had bad shape.
* - Activity omitted from total
& - Activity omitted from total and all peaks had bad shape.
< - MDA value printed.
A - Activity printed, but activity < MDA.
B - Activity < MDA and failed test.
C - Area < Critical level.
F - Failed fraction or key line test.
H - Halflife limit exceeded

---------- S U M M A R Y ----------

Total Activity (34.9 to 2779.2 keV) 1.925E+01 pCi/g

Laboratory: New World Technology

ORTEC g v - i (3263) Npp32 G53W3.10 07-JUL-2010 20:17:16
New World Technology Spectrum name: 2N000521.An1

Sample description
Parcel G 18-PG-C0281-24 393g
7/07/10 10:35

Acquisition information
Start time: 07-Jul-2010 18:31:54
Live time: 5400
Real time: 5409

- -

***** S U M M A R Y O F N U C L I D E S I N S A M P L E *****

Nuclide	Time of Count Activity pCi/g	Uncertainty 2 Sigma Counting pCi/g	Total pCi/g	MDA pCi/g
Ac-228	1.6762E+00	2.5174E-01	2.7711E-01	0.115E+00
AM-241 #A	6.6842E-02	3.0993E-01	3.0999E-01	0.233E+00
Bi-212	1.0732E+00	3.5090E-01	3.5843E-01	0.235E+00
BI-214	1.3319E+00	1.5777E-01	1.8094E-01	0.572E-01
CO-60 #A	4.9750E-03	1.3130E-02	1.3135E-02	0.269E-01
CS-137	6.1550E-02	4.1366E-02	4.1572E-02	0.310E-01
EU-152 #A	-6.5345E-02	4.3287E-02	4.3640E-02	0.115E+00
EU-154 C	7.8922E-02	7.6060E-02	7.6354E-02	0.595E-01
K-40	6.7551E+00	1.0179E+00	1.1212E+00	0.767E+00
Pa-234	1.7870E-01	9.9383E-02	1.0061E-01	0.105E+00
Pb-210 #C	0.0000E+00	3.8548E+00	3.8548E+00	0.000E+00
Pb-212	1.7499E+00	1.2578E-01	1.8323E-01	0.671E-01
PB-214	1.2314E+00	1.2460E-01	1.5281E-01	0.610E-01
RA-226	1.4898E+00	9.4279E-01	9.4950E-01	0.749E+00
Th-230 #A	-2.6919E+00	2.2120E+01	2.2125E+01	0.119E+02
Th-234 #	4.6462E+00	1.9842E+00	2.0328E+00	0.123E+01
Tl-208	6.3063E-01	7.8066E-02	8.8539E-02	0.354E-01
U-235 C	6.5827E-02	1.0010E-01	1.0022E-01	0.547E-01

- All peaks for activity calculation had bad shape.
* - Activity omitted from total
& - Activity omitted from total and all peaks had bad shape.
< - MDA value printed.
A - Activity printed, but activity < MDA.
B - Activity < MDA and failed test.
C - Area < Critical level.
F - Failed fraction or key line test.
H - Halflife limit exceeded

---------- S U M M A R Y ----------

Total Activity (32.4 to 2597.5 keV) 2.082E+01 pCi/g

Laboratory: New World Technology

ORTEC g v - i (3263) Npp32 G53W3.10 07-JUL-2010 18:22:22
New World Technology Spectrum name: 4N000331.An1

Sample description
Parcel G 18-PG-C0281-25 382g
7/07/10 10:40

Acquisition information
Start time: 07-Jul-2010 17:33:07
Live time: 2700
Real time: 2703

- -

***** S U M M A R Y O F N U C L I D E S I N S A M P L E *****

Nuclide		Time of Count Activity pCi/g	Uncertainty 2 Sigma Counting pCi/g	Total pCi/g	MDA pCi/g
Ac-228		1.1987E+00	2.6399E-01	2.7668E-01	0.127E+00
AM-241	#	7.3709E-01	9.8695E-01	9.8913E-01	0.665E+00
Bi-212		8.7901E-01	3.7540E-01	3.8014E-01	0.186E+00
BI-214		8.6373E-01	1.9433E-01	2.0265E-01	0.789E-01
CO-60	#A	-3.5650E-02	4.6684E-01	4.6685E-01	0.287E-01
CS-137		6.7944E-02	5.7125E-02	5.7307E-02	0.414E-01
EU-152	A	-3.5410E-02	4.5252E-02	4.5352E-02	0.131E+00
EU-154	A	2.0507E-02	8.7606E-02	8.7623E-02	0.740E-01
K-40		1.1048E+01	1.4817E+00	1.6691E+00	0.212E+00
Pa-234	#	3.5032E-01	2.0868E-01	2.1093E-01	0.186E+00
Pb-210	#	0.0000E+00	0.0000E+00	0.0000E+00	0.000E+00
Pb-212		1.0400E+00	1.5451E-01	1.7362E-01	0.910E-01
Pb-214		9.8917E-01	2.4299E-01	2.5317E-01	0.110E+00
RA-226	A	9.7383E-01	1.4296E+00	1.4315E+00	0.115E+01
Th-230	#A	1.7170E+01	3.4110E+01	3.4234E+01	0.270E+02
Th-234	#A	-1.1123E+00	4.1109E+00	4.1122E+00	0.215E+01
Tl-208	C	2.2369E-01	7.2909E-02	8.3325E-02	0.481E-01
U-235	A	7.4932E-02	9.1170E-02	9.1346E-02	0.751E-01

- All peaks for activity calculation had bad shape.
* - Activity omitted from total
& - Activity omitted from total and all peaks had bad shape.
< - MDA value printed.
A - Activity printed, but activity < MDA.
B - Activity < MDA and failed test.
C - Area < Critical level.
F - Failed fraction or key line test.
H - Halflife limit exceeded

---------- S U M M A R Y ----------

Total Activity (50.9 to 3245.1 keV) 1.644E+01 pCi/g

Laboratory: New World Technology

ORTEC g v - i (3263) Npp32 G53W3.10 07-JUL-2010 20:06:33
New World Technology Spectrum name: 5N000386.An1

Sample description
Parcel G 18-PG-C0281-26 381g
7/07/10 10:45

Acquisition information
Start time: 07-Jul-2010 18:26:22
Live time: 5400
Real time: 5404

- -

***** S U M M A R Y O F N U C L I D E S I N S A M P L E *****

Nuclide		Time of Count Activity pCi/g	Uncertainty 2 Sigma Counting pCi/g	Total pCi/g	MDA pCi/g
Ac-228		1.1402E+00	2.2903E-01	2.4220E-01	0.108E+00
AM-241	A	4.8492E-02	7.1461E-02	7.1591E-02	0.527E-01
Bi-212		9.2683E-01	2.8886E-01	2.9568E-01	0.178E+00
BI-214		9.3115E-01	1.4659E-01	1.5914E-01	0.581E-01
CO-60	#C	2.2249E-02	1.2876E-02	1.2964E-02	0.135E-01
CS-137		3.2434E-02	3.5710E-02	3.5776E-02	0.277E-01
EU-152	A	2.7909E-02	6.2415E-02	6.2460E-02	0.676E-01
EU-154	C	7.1879E-02	5.4180E-02	5.4521E-02	0.458E-01
K-40		8.4839E+00	1.0468E+00	1.2018E+00	0.666E+00
Pa-234	A	6.0666E-02	8.3500E-02	8.3669E-02	0.733E-01
Pb-210	#	6.9813E-01	6.9671E-01	6.9886E-01	0.503E+00
Pb-212		9.9562E-01	9.1647E-02	1.1894E-01	0.527E-01
Pb-214		7.3836E-01	1.1799E-01	1.2936E-01	0.569E-01
RA-226		1.2348E+00	8.0751E-01	8.1288E-01	0.631E+00
Th-230	A	7.0024E-01	5.4247E+00	5.4260E+00	0.446E+01
Th-234	A	5.0796E-01	8.6800E-01	8.6934E-01	0.774E+00
Tl-208		4.6246E-01	8.0810E-02	1.1613E-01	0.817E-02
U-235		6.7049E-02	6.5208E-02	6.5405E-02	0.406E-01

- All peaks for activity calculation had bad shape.
* - Activity omitted from total
& - Activity omitted from total and all peaks had bad shape.
< - MDA value printed.
A - Activity printed, but activity < MDA.
B - Activity < MDA and failed test.
C - Area < Critical level.
F - Failed fraction or key line test.
H - Halflife limit exceeded

---------- S U M M A R Y ----------

Total Activity (37.9 to 3020.7 keV) 1.568E+01 pCi/g

Laboratory: New World Technology

ORTEC g v - i (3263) Npp32 G53W3.10 07-JUL-2010 20:07:36
New World Technology Spectrum name: 1N000847.An1

Sample description
Parcel G 18-PG-C0281-27 370g
7/07/10 10:50

Acquisition information
Start time: 07-Jul-2010 18:31:03
Live time: 5400
Real time: 5403

- -

***** S U M M A R Y O F N U C L I D E S I N S A M P L E *****

Nuclide		Time of Count Activity pCi/g	Uncertainty Counting pCi/g	2 Sigma Total pCi/g	MDA pCi/g
Ac-228		9.6981E-01	1.9134E-01	2.0273E-01	0.113E+00
AM-241	#A	3.5180E-02	5.4308E-02	5.4398E-02	0.416E-01
Bi-212		5.9239E-01	3.1211E-01	3.1470E-01	0.223E+00
BI-214		6.8024E-01	1.0781E-01	1.1692E-01	0.514E-01
CO-60		2.3782E-02	2.6029E-02	2.6078E-02	0.211E-01
CS-137	#A	-4.8323E-03	9.4202E-02	9.4203E-02	0.205E-01
EU-152	A	-1.4673E-01	1.6974E-01	1.7020E-01	0.629E-01
EU-154	A	3.7556E-02	4.6926E-02	4.7034E-02	0.390E-01
K-40	#	8.3991E+00	9.4592E-01	1.1119E+00	0.227E+00
Pa-234	#C	7.6345E-02	1.0371E-01	1.0392E-01	0.516E-01
Pb-210		9.9876E-01	6.4799E-01	6.5275E-01	0.449E+00
Pb-212		9.7076E-01	8.8684E-02	1.1545E-01	0.460E-01
Pb-214		8.2323E-01	1.1911E-01	1.3299E-01	0.534E-01
RA-226		8.2432E-01	7.2257E-01	7.2525E-01	0.579E+00
Th-230	#A	2.9163E+00	7.1988E+00	7.2157E+00	0.481E+01
Th-234		1.2569E+00	8.4551E-01	8.5393E-01	0.756E+00
Tl-208		3.6189E-01	4.5126E-02	7.9343E-02	0.820E-02
U-235	C	4.1805E-02	5.8380E-02	5.8465E-02	0.412E-01

- All peaks for activity calculation had bad shape.
* - Activity omitted from total
& - Activity omitted from total and all peaks had bad shape.
< - MDA value printed.
A - Activity printed, but activity < MDA.
B - Activity < MDA and failed test.
C - Area < Critical level.
F - Failed fraction or key line test.
H - Halflife limit exceeded

---------- S U M M A R Y ----------

Total Activity (36.6 to 2885.2 keV) 1.588E+01 pCi/g

Laboratory: New World Technology

ORTEC g v - i (3263) Npp32 G53W3.10 07-JUL-2010 20:46:13
New World Technology Spectrum name: 4N000332.An1

Sample description
Parcel G 18-PG-C0281-28 364g
7/07/10 10:55

Acquisition information
Start time: 07-Jul-2010 19:14:31
Live time: 5400
Real time: 5406

- -

***** S U M M A R Y O F N U C L I D E S I N S A M P L E *****

Nuclide		Time of Count Activity pCi/g	Uncertainty Counting pCi/g	2 Sigma Total pCi/g	MDA pCi/g
Ac-228		1.5419E+00	2.3342E-01	2.5659E-01	0.876E-01
AM-241	A	2.2281E-01	6.1417E-01	6.1449E-01	0.501E+00
Bi-212		8.8263E-01	3.6692E-01	3.7181E-01	0.243E+00
BI-214		1.0189E+00	1.7301E-01	1.8581E-01	0.689E-01
CO-60	#A	-2.2047E-02	1.0633E-01	1.0634E-01	0.274E-01
CS-137	A	2.0038E-02	4.2244E-02	4.2265E-02	0.344E-01
EU-152	A	-6.4946E-02	6.7605E-02	6.7828E-02	0.124E+00
EU-154	C	7.9943E-02	9.2525E-02	9.2772E-02	0.746E-01
K-40		1.0975E+01	1.1238E+00	1.3585E+00	0.242E+00
Pa-234		3.7848E-01	1.9960E-01	2.0233E-01	0.150E+00
Pb-210	#	0.0000E+00	0.0000E+00	0.0000E+00	0.000E+00
Pb-212		1.3336E+00	1.2207E-01	1.5878E-01	0.704E-01
Pb-214		1.0150E+00	1.7203E-01	1.8685E-01	0.818E-01
RA-226	A	3.5448E-01	1.1047E+00	1.1051E+00	0.911E+00
Th-230	#A	-2.3600E+01	3.8680E+02	3.8682E+02	0.249E+02
Th-234	#A	-8.6356E-01	2.7204E+00	2.7216E+00	0.162E+01
Tl-208	C	3.2906E-01	5.0196E-02	7.7725E-02	0.672E-01
U-235	A	5.0508E-02	9.4745E-02	9.4822E-02	0.548E-01

- All peaks for activity calculation had bad shape.
* - Activity omitted from total
& - Activity omitted from total and all peaks had bad shape.
< - MDA value printed.
A - Activity printed, but activity < MDA.
B - Activity < MDA and failed test.
C - Area < Critical level.
F - Failed fraction or key line test.
H - Halflife limit exceeded

---------- S U M M A R Y ----------

Total Activity (50.9 to 3245.1 keV) 1.715E+01 pCi/g

Laboratory: New World Technology

ORTEC g v - i (3263) Npp32 G53W3.10 07-JUL-2010 19:14:51
New World Technology Spectrum name: 7N000427.An1

Sample description
Parcel G 18-PG-C0281-29 377g
7/07/10 11:00

Acquisition information
Start time: 07-Jul-2010 18:24:08
Live time: 2700
Real time: 2703

- -

***** S U M M A R Y O F N U C L I D E S I N S A M P L E *****

Nuclide	Time of Count Activity pCi/g	Uncertainty 2 Sigma Counting pCi/g	Total pCi/g	MDA pCi/g
Ac-228	6.0370E-01	2.1526E-01	2.1927E-01	0.162E+00
AM-241 #A	3.3795E-02	9.9889E-02	9.9934E-02	0.774E-01
Bi-212 #A	-8.4089E-02	3.5839E-01	3.5839E-01	0.111E+00
BI-214	5.4830E-01	1.6323E-01	1.6725E-01	0.796E-01
CO-60 #	7.0686E-02	6.5494E-02	6.5668E-02	0.356E-01
CS-137 #A	1.9178E-02	3.7141E-02	3.7163E-02	0.273E-01
EU-152 A	3.1301E-02	2.1885E-02	2.2045E-02	0.112E+00
EU-154 #C	1.2078E-01	1.0480E-01	1.0530E-01	0.719E-01
K-40	8.2158E+00	1.5637E+00	1.6649E+00	0.104E+01
Pa-234 A	5.7497E-02	9.0204E-02	9.0345E-02	0.981E-01
Pb-210 #A	6.5336E-01	9.4075E-01	9.4216E-01	0.697E+00
Pb-212	5.7432E-01	1.1721E-01	1.2510E-01	0.774E-01
PB-214	4.6456E-01	1.5979E-01	1.6324E-01	0.938E-01
RA-226 A	5.7367E-02	1.2060E+00	1.2060E+00	0.100E+01
Th-230 #A	-5.8568E+00	2.2221E+01	2.2243E+01	0.611E+01
Th-234 #A	-4.0896E-01	1.8668E+00	1.8672E+00	0.114E+01
Tl-208	2.4552E-01	7.2547E-02	8.4991E-02	0.737E-01
U-235	1.0922E-01	1.0827E-01	1.0858E-01	0.633E-01

- All peaks for activity calculation had bad shape.
* - Activity omitted from total
& - Activity omitted from total and all peaks had bad shape.
< - MDA value printed.
A - Activity printed, but activity < MDA.
B - Activity < MDA and failed test.
C - Area < Critical level.
F - Failed fraction or key line test.
H - Halflife limit exceeded

---------- S U M M A R Y ----------

Total Activity (42.2 to 3353.9 keV) 1.072E+01 pCi/g

Laboratory: New World Technology

ORTEC g v - i (3263) Npp32 G53W3.10 07-JUL-2010 19:46:58
New World Technology Spectrum name: 6N000448.An1

Sample description
Parcel G 18-PG-C0281-30 389g
7/07/10 11:05

Acquisition information
Start time: 07-Jul-2010 19:00:10
Live time: 2700
Real time: 2705

- -

***** S U M M A R Y O F N U C L I D E S I N S A M P L E *****

Nuclide		Time of Count Activity pCi/g	Uncertainty 2 Sigma Counting pCi/g	Total pCi/g	MDA pCi/g
Ac-228		9.3753E-01	2.4951E-01	2.5778E-01	0.117E+00
AM-241	A	4.2035E-02	1.0269E-01	1.0276E-01	0.834E-01
Bi-212		5.0867E-01	4.3288E-01	4.3426E-01	0.324E+00
BI-214		7.9500E-01	1.7260E-01	1.8052E-01	0.712E-01
CO-60	#A	2.4006E-02	4.8931E-02	4.8958E-02	0.294E-01
CS-137	A	2.1524E-02	4.1312E-02	4.1337E-02	0.332E-01
EU-152	#C	1.4986E-01	7.2824E-02	7.3924E-02	0.799E-01
EU-154	A	4.8902E-02	2.6233E-02	2.6558E-02	0.670E-01
K-40		8.6537E+00	1.4067E+00	1.5301E+00	0.784E+00
Pa-234	A	5.0265E-02	9.5418E-02	9.5519E-02	0.796E-01
Pb-210		1.6360E+00	1.1170E+00	1.1243E+00	0.677E+00
Pb-212		9.9359E-01	1.2192E-01	1.4349E-01	0.664E-01
PB-214		8.7195E-01	1.7037E-01	1.8152E-01	0.735E-01
RA-226		1.0833E+00	1.0788E+00	1.0819E+00	0.861E+00
Th-230	#A	3.4964E+00	7.2261E+00	7.2503E+00	0.544E+01
Th-234		1.4760E+00	1.2415E+00	1.2494E+00	0.105E+01
Tl-208		3.0491E-01	6.9012E-02	8.8239E-02	0.575E-01
U-235	C	1.0593E-01	1.1624E-01	1.1651E-01	0.597E-01

- All peaks for activity calculation had bad shape.
* - Activity omitted from total
& - Activity omitted from total and all peaks had bad shape.
< - MDA value printed.
A - Activity printed, but activity < MDA.
B - Activity < MDA and failed test.
C - Area < Critical level.
F - Failed fraction or key line test.
H - Halflife limit exceeded

---------- S U M M A R Y ----------

Total Activity (33.3 to 2659.2 keV) 1.726E+01 pCi/g

Laboratory: New World Technology

ORTEC g v - i (3263) Npp32 G53W3.10 07-JUL-2010 18:20:59
New World Technology Spectrum name: 7N000426.An1

Sample description
Parcel G 18-PG-C0281-31 419g
7/07/10 11:10

Acquisition information
Start time: 07-Jul-2010 17:20:15
Live time: 2700
Real time: 2703

- -

***** S U M M A R Y O F N U C L I D E S I N S A M P L E *****

Nuclide	Time of Count Activity pCi/g	Uncertainty 2 Sigma Counting pCi/g	Total pCi/g	MDA pCi/g
Ac-228	1.3352E+00	3.0639E-01	3.1999E-01	0.159E+00
AM-241 #A	3.0587E-03	3.9838E-02	3.9839E-02	0.406E-01
Bi-212	7.2114E-01	5.1198E-01	5.1433E-01	0.311E+00
BI-214	9.5925E-01	1.8108E-01	1.9199E-01	0.726E-01
CO-60 #A	-1.2639E-02	2.2182E-01	2.2182E-01	0.215E-01
CS-137 A	2.4359E-02	4.9507E-02	4.9534E-02	0.392E-01
EU-152 #C	1.1947E-01	7.5489E-02	7.6166E-02	0.109E+00
EU-154 C	9.7281E-02	7.5153E-02	7.5603E-02	0.621E-01
K-40	6.6732E+00	1.4960E+00	1.5664E+00	0.101E+01
Pa-234 A	1.0360E-01	1.8022E-01	1.8045E-01	0.116E+00
Pb-210	1.3284E+00	8.7424E-01	8.8047E-01	0.685E+00
Pb-212	1.1646E+00	1.4361E-01	1.6878E-01	0.791E-01
PB-214	9.0925E-01	1.9147E-01	2.0230E-01	0.922E-01
RA-226 A	4.3586E-01	1.2992E+00	1.2997E+00	0.107E+01
Th-230 #A	-7.1790E+00	5.7793E+01	5.7806E+01	0.674E+01
Th-234 #A	-1.4768E-01	1.5420E+00	1.5421E+00	0.120E+01
Tl-208	2.7511E-01	7.6604E-02	9.1266E-02	0.120E+00
U-235	1.0120E-01	8.3835E-02	8.4183E-02	0.664E-01

- All peaks for activity calculation had bad shape.
* - Activity omitted from total
& - Activity omitted from total and all peaks had bad shape.
< - MDA value printed.
A - Activity printed, but activity < MDA.
B - Activity < MDA and failed test.
C - Area < Critical level.
F - Failed fraction or key line test.
H - Halflife limit exceeded

---------- S U M M A R Y ----------

Total Activity (42.2 to 3353.9 keV) 1.347E+01 pCi/g

Laboratory: New World Technology

ORTEC g v - i (3263) Npp32 G53W3.10 08-JUL-2010 10:13:44
New World Technology Spectrum name: 3N000599.An1

Sample description
Parcel G 18-PG-C0281-32 389g
7/07/10 11:15

Acquisition information
Start time: 08-Jul-2010 08:26:23
Live time: 5400
Real time: 5405

- -

***** S U M M A R Y O F N U C L I D E S I N S A M P L E *****

Nuclide		Time of Count Activity pCi/g	Uncertainty Counting pCi/g	2 Sigma Total pCi/g	MDA pCi/g
Ac-228		1.3385E+00	2.4918E-01	2.6579E-01	0.105E+00
AM-241		8.3410E-02	8.1102E-02	8.1441E-02	0.648E-01
Bi-212		6.1503E-01	3.0098E-01	3.0388E-01	0.216E+00
BI-214		8.6219E-01	1.3128E-01	1.4326E-01	0.510E-01
CO-60	#A	-5.3715E-03	3.3307E-02	3.3309E-02	0.263E-01
CS-137	A	1.2444E-02	2.8819E-02	2.8831E-02	0.233E-01
EU-152	A	-7.3370E-02	7.1850E-02	7.2119E-02	0.799E-01
EU-154	C	4.7902E-02	4.7386E-02	4.7559E-02	0.423E-01
K-40		1.1207E+01	9.8597E-01	1.2570E+00	0.211E+00
Pa-234		1.2698E-01	1.1098E-01	1.1153E-01	0.781E-01
Pb-210	A	4.5259E-01	8.1718E-01	8.1794E-01	0.573E+00
Pb-212		1.1166E+00	1.0179E-01	1.3263E-01	0.564E-01
PB-214		1.0393E+00	1.4406E-01	1.6226E-01	0.666E-01
RA-226		1.4248E+00	9.0603E-01	9.1241E-01	0.723E+00
Th-230	#A	-1.0177E+01	9.9009E+01	9.9024E+01	0.638E+01
Th-234	#A	-3.3761E-01	1.2138E+00	1.2143E+00	0.961E+00
Tl-208		4.2187E-01	5.0260E-02	9.1181E-02	0.345E-01
U-235	C	9.8770E-02	7.7509E-02	7.7868E-02	0.515E-01

- All peaks for activity calculation had bad shape.
* - Activity omitted from total
& - Activity omitted from total and all peaks had bad shape.
< - MDA value printed.
A - Activity printed, but activity < MDA.
B - Activity < MDA and failed test.
C - Area < Critical level.
F - Failed fraction or key line test.
H - Halflife limit exceeded

---------- S U M M A R Y ----------

Total Activity (34.9 to 2779.2 keV) 1.824E+01 pCi/g

Laboratory: New World Technology

ORTEC g v - i (3263) Npp32 G53W3.10 07-JUL-2010 20:03:52
New World Technology Spectrum name: 7N000428.An1

Sample description
Parcel G 18-PG-C0281-33 397g
7/07/10 11:20

Acquisition information
Start time: 07-Jul-2010 19:17:24
Live time: 2700
Real time: 2703

- -

***** S U M M A R Y O F N U C L I D E S I N S A M P L E *****

Nuclide		Time of Count Activity pCi/g	Uncertainty Counting pCi/g	2 Sigma Total pCi/g	MDA pCi/g
Ac-228		1.1757E+00	2.7237E-01	2.8423E-01	0.148E+00
AM-241	#A	2.8042E-02	7.5587E-02	7.5628E-02	0.643E-01
Bi-212		5.4640E-01	4.4725E-01	4.4879E-01	0.322E+00
BI-214		8.5202E-01	1.6956E-01	1.7878E-01	0.773E-01
CO-60		4.8414E-02	6.0882E-02	6.0969E-02	0.457E-01
CS-137		5.6631E-02	5.4913E-02	5.5045E-02	0.404E-01
EU-152	#A	-2.0895E-01	7.2067E-01	7.2089E-01	0.114E+00
EU-154	C	7.3924E-02	8.3534E-02	8.3768E-02	0.696E-01
K-40		6.2651E+00	1.4468E+00	1.5110E+00	0.102E+01
Pa-234	A	9.1050E-02	1.2996E-01	1.3020E-01	0.125E+00
Pb-210		1.0352E+00	1.0434E+00	1.0466E+00	0.734E+00
Pb-212		8.8243E-01	1.3607E-01	1.5175E-01	0.788E-01
PB-214		7.1294E-01	1.6777E-01	1.7541E-01	0.850E-01
RA-226		8.5273E-01	1.0384E+00	1.0404E+00	0.830E+00
Th-230	#A	-8.7761E+00	1.6300E+02	1.6300E+02	0.802E+01
Th-234	#A	6.9368E-01	1.5949E+00	1.5962E+00	0.120E+01
Tl-208	#	2.7720E-01	9.6280E-02	1.0848E-01	0.700E-01
U-235	C	1.1058E-01	1.4601E-01	1.4625E-01	0.612E-01

- All peaks for activity calculation had bad shape.
* - Activity omitted from total
& - Activity omitted from total and all peaks had bad shape.
< - MDA value printed.
A - Activity printed, but activity < MDA.
B - Activity < MDA and failed test.
C - Area < Critical level.
F - Failed fraction or key line test.
H - Halflife limit exceeded

---------- S U M M A R Y ----------

Total Activity (42.2 to 3353.9 keV) 1.077E+01 pCi/g

Laboratory: New World Technology

ORTEC g v - i (3263) Npp32 G53W3.10 08-JUL-2010 10:59:53
New World Technology Spectrum name: 6N000449.An1

Sample description
Parcel G 18-PG-C0281-34 368g
7/07/10 11:25

Acquisition information
Start time: 08-Jul-2010 09:47:42
Live time: 2700
Real time: 2706

- -

***** S U M M A R Y O F N U C L I D E S I N S A M P L E *****

Nuclide		Time of Count Activity pCi/g	Uncertainty 2 Sigma Counting pCi/g	Total pCi/g	MDA pCi/g
Ac-228		8.8974E-01	2.0164E-01	2.1081E-01	0.133E+00
AM-241		1.3091E-01	1.0559E-01	1.0623E-01	0.825E-01
Bi-212		1.0833E+00	4.2580E-01	4.3214E-01	0.260E+00
BI-214		7.3126E-01	1.4550E-01	1.5342E-01	0.602E-01
CO-60	#A	1.1080E-02	2.3074E-02	2.3086E-02	0.184E-01
CS-137	A	2.6612E-02	4.7634E-02	4.7667E-02	0.381E-01
EU-152	A	6.5036E-02	4.6554E-02	4.6879E-02	0.106E+00
EU-154	C	8.9490E-02	4.3080E-02	4.3742E-02	0.609E-01
K-40		7.9076E+00	1.3537E+00	1.4613E+00	0.803E+00
Pa-234	C	1.4049E-01	1.0603E-01	1.0674E-01	0.420E-01
Pb-210		9.8798E-01	8.5047E-01	8.5394E-01	0.674E+00
Pb-212		9.2908E-01	1.2314E-01	1.4201E-01	0.698E-01
PB-214		8.4586E-01	1.7625E-01	1.8643E-01	0.790E-01
RA-226	A	4.4942E-02	1.0667E+00	1.0667E+00	0.889E+00
Th-230	#A	9.7630E-01	2.8271E+00	2.8320E+00	0.277E+01
Th-234		1.2776E+00	1.2033E+00	1.2094E+00	0.103E+01
Tl-208		3.3144E-01	8.1984E-02	1.0146E-01	0.608E-01
U-235		1.2496E-01	7.2834E-02	7.3444E-02	0.474E-01

- All peaks for activity calculation had bad shape.
* - Activity omitted from total
& - Activity omitted from total and all peaks had bad shape.
< - MDA value printed.
A - Activity printed, but activity < MDA.
B - Activity < MDA and failed test.
C - Area < Critical level.
F - Failed fraction or key line test.
H - Halflife limit exceeded

---------- S U M M A R Y ----------

Total Activity (33.3 to 2659.2 keV) 1.524E+01 pCi/g

Laboratory: New World Technology

ORTEC g v - i (3263) Npp32 G53W3.10 07-JUL-2010 20:57:02
New World Technology Spectrum name: 5N000387.An1

Sample description
Parcel G 18-PG-C0281-35 377g
7/07/10 11:30

Acquisition information
Start time: 07-Jul-2010 20:09:44
Live time: 2700
Real time: 2702

- -

***** S U M M A R Y O F N U C L I D E S I N S A M P L E *****

Nuclide	Time of Count Activity pCi/g	Uncertainty 2 Sigma Counting pCi/g	Total pCi/g	MDA pCi/g
Ac-228	9.2472E-01	2.5746E-01	2.6527E-01	0.121E+00
AM-241 #A	1.0148E-02	6.4724E-02	6.4730E-02	0.559E-01
Bi-212	9.0169E-01	4.1164E-01	4.1619E-01	0.266E+00
BI-214	7.8541E-01	1.8189E-01	1.8924E-01	0.763E-01
CO-60 #	3.1258E-02	3.1811E-02	3.1881E-02	0.195E-01
CS-137 A	2.6844E-02	4.1701E-02	4.1740E-02	0.321E-01
EU-152 C	1.5606E-01	9.1361E-02	9.2314E-02	0.781E-01
EU-154 C	7.9976E-02	8.1418E-02	8.1699E-02	0.617E-01
K-40	8.4903E+00	1.4384E+00	1.5550E+00	0.866E+00
Pa-234 C	1.4289E-01	1.1388E-01	1.1456E-01	0.686E-01
Pb-210	1.0540E+00	9.6539E-01	9.6893E-01	0.688E+00
Pb-212	9.3761E-01	1.2830E-01	1.4682E-01	0.719E-01
Pb-214	6.8231E-01	1.4183E-01	1.5006E-01	0.815E-01
RA-226	8.7191E-01	1.0993E+00	1.1013E+00	0.870E+00
Th-230 #A	4.5920E+00	8.8157E+00	8.8500E+00	0.648E+01
Th-234 #A	-2.8128E-02	1.2801E+00	1.2801E+00	0.107E+01
Tl-208	5.3161E-01	1.2277E-01	1.5577E-01	0.165E-01
U-235	1.3365E-01	8.5801E-02	8.6395E-02	0.519E-01

- All peaks for activity calculation had bad shape.
* - Activity omitted from total
& - Activity omitted from total and all peaks had bad shape.
< - MDA value printed.
A - Activity printed, but activity < MDA.
B - Activity < MDA and failed test.
C - Area < Critical level.
F - Failed fraction or key line test.
H - Halflife limit exceeded

---------- S U M M A R Y ----------

Total Activity (37.9 to 3020.7 keV) 1.444E+01 pCi/g

Laboratory: New World Technology

ORTEC g v - i (3263) Npp32 G53W3.10 07-JUL-2010 21:03:48
New World Technology Spectrum name: 7N000429.An1

Sample description
Parcel G 18-PG-C0281-36 375g
7/07/10 11:35

Acquisition information
Start time: 07-Jul-2010 20:17:25
Live time: 2700
Real time: 2703

- -

***** S U M M A R Y O F N U C L I D E S I N S A M P L E *****

Nuclide		Time of Count Activity pCi/g	Uncertainty Counting pCi/g	2 Sigma Total pCi/g	MDA pCi/g
Ac-228		1.0020E+00	3.0571E-01	3.1345E-01	0.147E+00
AM-241	#A	3.6120E-02	8.3481E-02	8.3543E-02	0.708E-01
Bi-212		8.3058E-01	4.8387E-01	4.8717E-01	0.252E+00
BI-214		9.7008E-01	2.0465E-01	2.1458E-01	0.844E-01
CO-60	#	4.6009E-02	5.5627E-02	5.5714E-02	0.334E-01
CS-137	#A	6.7474E-03	3.6178E-02	3.6181E-02	0.304E-01
EU-152	#A	2.7707E-02	3.2987E-02	3.3070E-02	0.128E+00
EU-154		1.0403E-01	1.2749E-01	1.2779E-01	0.806E-01
K-40		9.5201E+00	1.7080E+00	1.8319E+00	0.108E+01
Pa-234	C	2.1506E-01	1.4022E-01	1.4148E-01	0.105E+00
Pb-210		9.4727E-01	1.0291E+00	1.0318E+00	0.753E+00
Pb-212		1.1300E+00	1.4748E-01	1.7074E-01	0.869E-01
PB-214		9.8563E-01	2.1031E-01	2.2191E-01	0.107E+00
RA-226	A	4.2782E-01	1.2150E+00	1.2154E+00	0.997E+00
Th-230	#A	-1.5147E+00	1.5714E+01	1.5716E+01	0.878E+01
Th-234	A	9.4861E-01	1.5154E+00	1.5180E+00	0.130E+01
Tl-208		4.2372E-01	1.0598E-01	1.3066E-01	0.741E-01
U-235	A	2.5987E-02	9.4791E-02	9.4811E-02	0.622E-01

- All peaks for activity calculation had bad shape.
* - Activity omitted from total
& - Activity omitted from total and all peaks had bad shape.
< - MDA value printed.
A - Activity printed, but activity < MDA.
B - Activity < MDA and failed test.
C - Area < Critical level.
F - Failed fraction or key line test.
H - Halflife limit exceeded

---------- S U M M A R Y ----------

Total Activity (42.2 to 3353.9 keV) 1.486E+01 pCi/g

Laboratory: New World Technology

ORTEC g v - i (3263) Npp32 G53W3.10 13-JUL-2010 19:18:44
New World Technology Spectrum name: 6N000459.An1

Sample description
Parcel G 18-PG-C0281-37 378g
7/13/10 09:00

Acquisition information
Start time: 13-Jul-2010 17:44:07
Live time: 5400
Real time: 5409

- -

***** S U M M A R Y O F N U C L I D E S I N S A M P L E *****

Nuclide		Time of Count Activity pCi/g	Uncertainty 2 Sigma Counting pCi/g	Total pCi/g	MDA pCi/g
Ac-228		1.3036E+00	2.3522E-01	2.5189E-01	0.112E+00
AM-241	A	4.0617E-02	7.8839E-02	7.8921E-02	0.642E-01
Bi-212		8.4622E-01	3.2150E-01	3.2662E-01	0.223E+00
BI-214		8.8521E-01	1.3034E-01	1.4302E-01	0.549E-01
CO-60	#	4.6973E-02	2.5455E-02	2.5652E-02	0.140E-01
CS-137	A	3.3686E-03	3.0331E-02	3.0331E-02	0.257E-01
EU-152	C	7.5765E-02	3.1700E-02	3.2344E-02	0.727E-01
EU-154	C	1.0898E-01	7.6190E-02	7.6747E-02	0.497E-01
K-40		1.0319E+01	9.3913E-01	1.1822E+00	0.139E+00
Pa-234	C	1.2065E-01	1.2329E-01	1.2374E-01	0.735E-01
Pb-210		1.5678E+00	8.5435E-01	8.6302E-01	0.535E+00
Pb-212		1.3315E+00	9.6183E-02	1.3975E-01	0.505E-01
PB-214		9.1069E-01	1.3333E-01	1.4851E-01	0.608E-01
RA-226		9.5634E-01	7.7804E-01	7.8139E-01	0.625E+00
Th-230	#	6.1756E+00	8.7959E+00	8.8579E+00	0.566E+01
Th-234	#	2.0383E+00	1.1147E+00	1.1315E+00	0.780E+00
Tl-208		4.0962E-01	7.1165E-02	1.0257E-01	0.419E-01
U-235		5.4916E-02	5.3290E-02	5.3452E-02	0.408E-01

- All peaks for activity calculation had bad shape.
* - Activity omitted from total
& - Activity omitted from total and all peaks had bad shape.
< - MDA value printed.
A - Activity printed, but activity < MDA.
B - Activity < MDA and failed test.
C - Area < Critical level.
F - Failed fraction or key line test.
H - Halflife limit exceeded

---------- S U M M A R Y ----------

Total Activity (33.3 to 2659.2 keV) 2.067E+01 pCi/g

Laboratory: New World Technology

ORTEC g v - i (3263) Npp32 G53W3.10 13-JUL-2010 16:55:32
New World Technology Spectrum name: 6N000458.An1

Sample description
Parcel G 18-PG-C0281-38 385g
7/13/10 09:10

Acquisition information
Start time: 13-Jul-2010 15:12:43
Live time: 5400
Real time: 5410

- -

***** S U M M A R Y O F N U C L I D E S I N S A M P L E *****

Nuclide		Time of Count Activity pCi/g	Uncertainty Counting pCi/g	2 Sigma Total pCi/g	MDA pCi/g
Ac-228		1.0308E+00	1.5986E-01	1.7502E-01	0.113E+00
AM-241	#A	-9.5238E-03	6.0691E-02	6.0691E-02	0.759E-02
Bi-212		8.2227E-01	3.1242E-01	3.1740E-01	0.216E+00
BI-214		8.9416E-01	1.1993E-01	1.3387E-01	0.460E-01
CO-60		2.1050E-02	1.9574E-02	1.9626E-02	0.207E-01
CS-137	A	1.2612E-02	2.9399E-02	2.9411E-02	0.243E-01
EU-152	A	-2.3951E-02	1.6855E-02	1.6977E-02	0.767E-01
EU-154	A	3.1524E-02	2.8728E-02	2.8851E-02	0.527E-01
K-40		9.7150E+00	1.0029E+00	1.2094E+00	0.424E+00
Pa-234	A	2.6590E-02	5.0996E-02	5.1050E-02	0.568E-01
Pb-210		5.8463E-01	6.0060E-01	6.0232E-01	0.488E+00
Pb-212		1.0886E+00	9.0944E-02	1.2305E-01	0.504E-01
PB-214		8.2309E-01	1.2672E-01	1.3983E-01	0.587E-01
RA-226		9.0583E-01	7.2031E-01	7.2356E-01	0.578E+00
Th-230	A	4.0402E+00	6.4088E+00	6.4453E+00	0.520E+01
Th-234		1.3601E+00	8.9309E-01	9.0242E-01	0.758E+00
Tl-208		3.9965E-01	5.4461E-02	9.0335E-02	0.411E-01
U-235		1.2377E-01	8.2378E-02	8.2908E-02	0.417E-01

- All peaks for activity calculation had bad shape.
* - Activity omitted from total
& - Activity omitted from total and all peaks had bad shape.
< - MDA value printed.
A - Activity printed, but activity < MDA.
B - Activity < MDA and failed test.
C - Area < Critical level.
F - Failed fraction or key line test.
H - Halflife limit exceeded

---------- S U M M A R Y ----------

Total Activity (33.3 to 2659.2 keV) 1.716E+01 pCi/g

Laboratory: New World Technology

ORTEC g v - i (3263) Npp32 G53W3.10 13-JUL-2010 19:53:36
New World Technology Spectrum name: 2N000534.An1

Sample description
Parcel G 18-PG-C0281-39 387g
7/13/10 09:20

Acquisition information
Start time: 13-Jul-2010 18:21:50
Live time: 5400
Real time: 5409

- -

***** S U M M A R Y O F N U C L I D E S I N S A M P L E *****

Nuclide		Time of Count Activity pCi/g	Uncertainty Counting pCi/g	2 Sigma Total pCi/g	MDA pCi/g
Ac-228		1.0975E+00	1.4608E-01	1.6460E-01	0.100E+00
AM-241	#A	-1.2923E-02	3.7082E-01	3.7082E-01	0.263E+00
Bi-212		1.0198E+00	2.9340E-01	3.0150E-01	0.177E+00
BI-214		8.8266E-01	1.4432E-01	1.5580E-01	0.605E-01
CO-60	#A	4.8351E-03	6.0290E-03	6.0378E-03	0.279E-01
CS-137		1.0661E-01	3.8804E-02	3.9460E-02	0.255E-01
EU-152	#A	1.1561E-03	8.9542E-04	9.0076E-04	0.109E+00
EU-154	C	8.2291E-02	6.4769E-02	6.5143E-02	0.613E-01
K-40		6.3438E+00	9.0102E-01	1.0033E+00	0.678E+00
Pa-234		2.0043E-01	9.3409E-02	9.5044E-02	0.892E-01
Pb-210	#C	0.0000E+00	2.9862E+00	2.9862E+00	0.000E+00
Pb-212		1.1309E+00	1.0425E-01	1.3521E-01	0.610E-01
PB-214		7.5284E-01	1.2195E-01	1.3340E-01	0.740E-01
RA-226		9.8156E-01	8.0558E-01	8.0899E-01	0.646E+00
Th-230	A	4.9605E-01	1.6646E+01	1.6646E+01	0.141E+02
Th-234		1.5958E+00	1.3563E+00	1.3648E+00	0.111E+01
Tl-208		3.8703E-01	6.6629E-02	7.1391E-02	0.330E-01
U-235	A	3.6743E-02	6.3666E-02	6.3727E-02	0.504E-01

- All peaks for activity calculation had bad shape.
* - Activity omitted from total
& - Activity omitted from total and all peaks had bad shape.
< - MDA value printed.
A - Activity printed, but activity < MDA.
B - Activity < MDA and failed test.
C - Area < Critical level.
F - Failed fraction or key line test.
H - Halflife limit exceeded

---------- S U M M A R Y ----------

Total Activity (32.4 to 2597.5 keV) 1.450E+01 pCi/g

Laboratory: New World Technology

ORTEC g v - i (3263) Npp32 G53W3.10 13-JUL-2010 20:39:53
New World Technology Spectrum name: 1N000867.An1

Sample description
Parcel G 18-PG-C0281-40 391g
7/13/10 09:30

Acquisition information
Start time: 13-Jul-2010 19:07:36
Live time: 5400
Real time: 5403

- -

***** S U M M A R Y O F N U C L I D E S I N S A M P L E *****

Nuclide		Time of Count Activity pCi/g	Uncertainty Counting pCi/g	2 Sigma Total pCi/g	MDA pCi/g
Ac-228		1.1408E+00	1.5634E-01	1.7509E-01	0.887E-01
AM-241	#A	2.3326E-02	6.1614E-02	6.1649E-02	0.459E-01
Bi-212	#	1.0774E+00	3.7411E-01	3.8124E-01	0.170E+00
BI-214		8.7255E-01	1.3743E-01	1.4919E-01	0.527E-01
CO-60	#A	-3.2298E-02	2.7549E-01	2.7550E-01	0.204E-01
CS-137	A	1.5532E-02	2.9144E-02	2.9163E-02	0.234E-01
EU-152	A	-1.7782E-01	6.7159E-01	6.7175E-01	0.647E-01
EU-154	A	2.9037E-02	3.5178E-02	3.5264E-02	0.355E-01
K-40	#	6.2578E+00	7.5265E-01	8.6950E-01	0.139E+00
Pa-234	#C	1.0242E-01	7.2557E-02	7.3109E-02	0.623E-01
Pb-210		8.8232E-01	6.5495E-01	6.5862E-01	0.456E+00
Pb-212		1.0457E+00	8.7391E-02	1.1822E-01	0.434E-01
Pb-214		8.0191E-01	1.2522E-01	1.3783E-01	0.542E-01
RA-226		7.0656E-01	6.8364E-01	6.8572E-01	0.550E+00
Th-230		6.3203E+00	5.8244E+00	5.9221E+00	0.400E+01
Th-234		1.4548E+00	8.1210E-01	8.2381E-01	0.718E+00
Tl-208		3.9618E-01	4.9091E-02	8.6686E-02	0.776E-02
U-235	A	1.2764E-02	2.9697E-02	2.9713E-02	0.390E-01

- All peaks for activity calculation had bad shape.
* - Activity omitted from total
& - Activity omitted from total and all peaks had bad shape.
< - MDA value printed.
A - Activity printed, but activity < MDA.
B - Activity < MDA and failed test.
C - Area < Critical level.
F - Failed fraction or key line test.
H - Halflife limit exceeded

---------- S U M M A R Y ----------

Total Activity (36.6 to 2885.2 keV) 2.096E+01 pCi/g

Laboratory: New World Technology

ORTEC g v - i (3263) Npp32 G53W3.10 13-JUL-2010 20:45:38
New World Technology Spectrum name: 3N000611.An1

Sample description
Parcel G 18-PG-C0281-41 380g
7/13/10 09:40

Acquisition information
Start time: 13-Jul-2010 19:12:57
Live time: 5400
Real time: 5404

- -

***** S U M M A R Y O F N U C L I D E S I N S A M P L E *****

Nuclide		Time of Count Activity pCi/g	Uncertainty Counting pCi/g	2 Sigma Total pCi/g	MDA pCi/g
Ac-228		1.0310E+00	1.7839E-01	1.9209E-01	0.109E+00
AM-241	A	1.2175E-02	8.6471E-02	8.6478E-02	0.710E-01
Bi-212		6.1496E-01	3.2457E-01	3.2726E-01	0.238E+00
BI-214		8.9725E-01	1.4252E-01	1.5451E-01	0.585E-01
CO-60	#A	-4.3112E-02	5.4564E-01	5.4565E-01	0.217E-01
CS-137		2.8813E-02	3.4253E-02	3.4308E-02	0.267E-01
EU-152	A	-1.0919E-01	8.5302E-02	8.5803E-02	0.984E-01
EU-154	A	4.0975E-02	6.9272E-02	6.9359E-02	0.459E-01
K-40		7.9219E+00	8.5533E-01	1.0175E+00	0.205E+00
Pa-234	#A	5.4862E-02	7.6509E-02	7.6660E-02	0.710E-01
Pb-210		5.8875E-01	7.5987E-01	7.6126E-01	0.543E+00
Pb-212		9.6475E-01	9.8995E-02	1.2327E-01	0.575E-01
PB-214		6.5249E-01	1.1170E-01	1.2114E-01	0.557E-01
RA-226	A	3.1356E-01	9.1299E-01	9.1329E-01	0.756E+00
Th-230	#A	-9.6310E+00	4.8132E+01	4.8160E+01	0.495E+01
Th-234	A	9.5670E-01	1.4182E+00	1.4211E+00	0.100E+01
Tl-208		3.5085E-01	5.9755E-02	8.7029E-02	0.353E-01
U-235		5.8448E-02	5.7393E-02	5.7563E-02	0.483E-01

- All peaks for activity calculation had bad shape.
* - Activity omitted from total
& - Activity omitted from total and all peaks had bad shape.
< - MDA value printed.
A - Activity printed, but activity < MDA.
B - Activity < MDA and failed test.
C - Area < Critical level.
F - Failed fraction or key line test.
H - Halflife limit exceeded

---------- S U M M A R Y ----------

Total Activity (34.9 to 2779.2 keV) 1.249E+01 pCi/g

Laboratory: New World Technology

ORTEC g v - i (3263) Npp32 G53W3.10 14-JUL-2010 09:41:09
New World Technology Spectrum name: 5N000394.An1

Sample description
Parcel G 18-PG-C0281-42 385g
7/13/10 09:50

Acquisition information
Start time: 14-Jul-2010 08:45:01
Live time: 2700
Real time: 2702

- -

***** S U M M A R Y O F N U C L I D E S I N S A M P L E *****

Nuclide		Time of Count Activity pCi/g	Uncertainty Counting pCi/g	2 Sigma Total pCi/g	MDA pCi/g
Ac-228		1.1894E+00	2.6878E-01	2.8107E-01	0.116E+00
AM-241	#A	2.0843E-02	7.2162E-02	7.2186E-02	0.601E-01
Bi-212		6.1600E-01	4.0268E-01	4.0485E-01	0.320E+00
BI-214		8.6778E-01	2.0294E-01	2.1099E-01	0.792E-01
CO-60	#A	1.4185E-02	3.1453E-02	3.1467E-02	0.233E-01
CS-137	A	4.2574E-02	5.5450E-02	5.5524E-02	0.426E-01
EU-152	A	2.7774E-02	2.7049E-02	2.7152E-02	0.737E-01
EU-154		1.3911E-01	1.0009E-01	1.0078E-01	0.570E-01
K-40		7.4727E+00	1.3508E+00	1.4474E+00	0.846E+00
Pa-234	C	1.0281E-01	7.6269E-02	7.6799E-02	0.821E-01
Pb-210	A	5.5313E-01	9.8067E-01	9.8163E-01	0.712E+00
Pb-212		1.0712E+00	1.3533E-01	1.5801E-01	0.754E-01
Pb-214		8.3536E-01	1.3699E-01	1.4956E-01	0.656E-01
RA-226	A	7.3356E-01	1.1045E+00	1.1059E+00	0.881E+00
Th-230	A	1.8465E+00	8.2759E+00	8.2819E+00	0.675E+01
Th-234	A	4.6090E-01	1.2531E+00	1.2538E+00	0.111E+01
Tl-208		5.5945E-01	1.2510E-01	1.6071E-01	0.162E-01
U-235		1.1883E-01	7.1961E-02	7.2520E-02	0.542E-01

- All peaks for activity calculation had bad shape.
* - Activity omitted from total
& - Activity omitted from total and all peaks had bad shape.
< - MDA value printed.
A - Activity printed, but activity < MDA.
B - Activity < MDA and failed test.
C - Area < Critical level.
F - Failed fraction or key line test.
H - Halflife limit exceeded

---------- S U M M A R Y ----------

Total Activity (37.9 to 3020.7 keV) 1.287E+01 pCi/g

Laboratory: New World Technology

ORTEC g v - i (3263) Npp32 G53W3.10 19-JUL-2010 20:02:30
New World Technology Spectrum name: 3N000623.An1

Sample description
Parcel G 18-PG-C0281-43 380g
7/19/10 11:00

Acquisition information
Start time: 19-Jul-2010 19:14:53
Live time: 2700
Real time: 2703

- -

***** S U M M A R Y O F N U C L I D E S I N S A M P L E *****

Nuclide	Time of Count Activity pCi/g	Uncertainty 2 Sigma Counting pCi/g	Total pCi/g	MDA pCi/g
Ac-228	8.1680E-01	2.3119E-01	2.3798E-01	0.133E+00
AM-241 #A	-4.2468E-03	1.1028E-01	1.1028E-01	0.768E-02
Bi-212 #	6.3567E-01	4.6301E-01	4.6503E-01	0.228E+00
BI-214	7.4003E-01	1.4925E-01	1.5716E-01	0.472E-01
CO-60 #A	-3.9590E-02	2.6224E-01	2.6226E-01	0.319E-01
CS-137 #A	-9.6175E-04	5.8754E-02	5.8754E-02	0.386E-01
EU-152 #A	1.2196E-01	6.9648E-02	7.0411E-02	0.127E+00
EU-154 #C	7.7108E-02	7.2563E-02	7.2856E-02	0.612E-01
K-40	9.1582E+00	1.3624E+00	1.5040E+00	0.372E+00
Pa-234 C	2.7976E-01	1.3367E-01	1.3590E-01	0.121E+00
Pb-210 A	6.3056E-01	8.8641E-01	8.8778E-01	0.670E+00
Pb-212	8.2008E-01	1.2615E-01	1.4076E-01	0.709E-01
PB-214	8.7788E-01	2.1032E-01	2.1957E-01	0.935E-01
RA-226	1.1344E+00	1.2805E+00	1.2833E+00	0.103E+01
Th-230 #A	-1.0503E+01	7.5780E+01	7.5801E+01	0.570E+01
Th-234 A	4.0515E-01	1.5121E+00	1.5126E+00	0.136E+01
Tl-208	2.3333E-01	6.5238E-02	7.7631E-02	0.499E-01
U-235	1.2168E-01	1.0305E-01	1.0345E-01	0.691E-01

- All peaks for activity calculation had bad shape.
* - Activity omitted from total
& - Activity omitted from total and all peaks had bad shape.
< - MDA value printed.
A - Activity printed, but activity < MDA.
B - Activity < MDA and failed test.
C - Area < Critical level.
F - Failed fraction or key line test.
H - Halflife limit exceeded

---------- S U M M A R Y ----------

Total Activity (34.9 to 2779.2 keV) 1.340E+01 pCi/g

Laboratory: New World Technology

ORTEC g v - i (3263) Npp32 G53W3.10 19-JUL-2010 20:13:45
New World Technology Spectrum name: 1N000893.An1

Sample description
Parcel G 18-PG-C0281-44 383g
7/16/10 11:10

Acquisition information
Start time: 19-Jul-2010 19:26:14
Live time: 2700
Real time: 2702

- -

***** S U M M A R Y O F N U C L I D E S I N S A M P L E *****

Nuclide	Time of Count Activity pCi/g	Uncertainty 2 Sigma Counting pCi/g	Total pCi/g	MDA pCi/g
Ac-228	1.1034E+00	1.9139E-01	2.0602E-01	0.179E+00
AM-241 #	6.8972E-02	9.0073E-02	9.0282E-02	0.652E-01
Bi-212	7.0002E-01	4.0704E-01	4.0982E-01	0.251E+00
BI-214	8.3121E-01	1.6430E-01	1.7336E-01	0.753E-01
CO-60 #A	-1.6143E-02	1.0867E-01	1.0867E-01	0.270E-01
CS-137	3.3337E-02	3.6145E-02	3.6215E-02	0.262E-01
EU-152 #A	-1.4908E-01	2.1868E-01	2.1904E-01	0.879E-01
EU-154 C	4.1680E-02	4.5869E-02	4.6004E-02	0.398E-01
K-40	3.2332E+00	9.8771E-01	1.0130E+00	0.555E+00
Pa-234 #A	1.0556E-02	1.9430E-02	1.9452E-02	0.854E-01
Pb-210 #	1.1755E+00	8.0038E-01	8.0571E-01	0.571E+00
Pb-212	1.3901E+00	1.3840E-01	1.7424E-01	0.599E-01
Pb-214	9.7057E-01	1.6757E-01	1.8150E-01	0.683E-01
RA-226	1.0756E+00	9.9176E-01	9.9509E-01	0.782E+00
Th-230 #A	4.9254E-01	4.6766E+00	4.6773E+00	0.417E+01
Th-234	1.2772E+00	1.2307E+00	1.2367E+00	0.109E+01
Tl-208	4.2657E-01	1.0795E-01	1.3255E-01	0.158E-01
U-235 C	9.6671E-02	9.4471E-02	9.4753E-02	0.575E-01

- All peaks for activity calculation had bad shape.
* - Activity omitted from total
& - Activity omitted from total and all peaks had bad shape.
< - MDA value printed.
A - Activity printed, but activity < MDA.
B - Activity < MDA and failed test.
C - Area < Critical level.
F - Failed fraction or key line test.
H - Halflife limit exceeded

---------- S U M M A R Y ----------

Total Activity (36.6 to 2885.2 keV) 1.218E+01 pCi/g

Laboratory: New World Technology

ORTEC g v - i (3263) Npp32 G53W3.10 20-JUL-2010 11:57:33
New World Technology Spectrum name: 6N000472.An1

Sample description
Parcel G 18-PG-C0281-45 388g
7/19/10 11:20

Acquisition information
Start time: 20-Jul-2010 10:14:23
Live time: 5400
Real time: 5410

- -

***** S U M M A R Y O F N U C L I D E S I N S A M P L E *****

Nuclide		Time of Count Activity pCi/g	Uncertainty 2 Sigma Counting pCi/g	Total pCi/g	MDA pCi/g
Ac-228		1.1767E+00	1.6896E-01	1.8751E-01	0.931E-01
AM-241	#A	4.1467E-02	7.3290E-02	7.3383E-02	0.534E-01
Bi-212	A	2.0954E-01	3.2680E-01	3.2711E-01	0.264E+00
BI-214		8.3428E-01	1.4616E-01	1.5634E-01	0.593E-01
CO-60	A	1.4913E-02	1.7967E-02	1.7995E-02	0.201E-01
CS-137	A	2.4863E-02	3.4510E-02	3.4550E-02	0.277E-01
EU-152	A	5.2972E-02	2.8991E-02	2.9337E-02	0.605E-01
EU-154	A	1.4434E-02	1.4340E-02	1.4392E-02	0.434E-01
K-40		6.7966E+00	9.9921E-01	1.1054E+00	0.575E+00
Pa-234	C	1.5169E-01	1.1785E-01	1.1860E-01	0.734E-01
Pb-210		5.7944E-01	5.4718E-01	5.4904E-01	0.443E+00
Pb-212		1.1793E+00	9.0958E-02	1.2781E-01	0.482E-01
PB-214		7.8969E-01	9.6853E-02	1.1224E-01	0.527E-01
RA-226		1.1289E+00	7.4802E-01	7.5287E-01	0.595E+00
Th-230	#A	5.3308E-01	1.9846E+00	1.9867E+00	0.199E+01
Th-234	A	6.8447E-01	8.9228E-01	8.9465E-01	0.770E+00
Tl-208		4.1006E-01	7.3913E-02	1.0456E-01	0.435E-01
U-235		5.8677E-02	6.2915E-02	6.3072E-02	0.416E-01

- All peaks for activity calculation had bad shape.
* - Activity omitted from total
& - Activity omitted from total and all peaks had bad shape.
< - MDA value printed.
A - Activity printed, but activity < MDA.
B - Activity < MDA and failed test.
C - Area < Critical level.
F - Failed fraction or key line test.
H - Halflife limit exceeded

---------- S U M M A R Y ----------

Total Activity (33.3 to 2659.2 keV) 1.289E+01 pCi/g

Laboratory: New World Technology

ORTEC g v - i (3263) Npp32 G53W3.10 20-JUL-2010 11:56:51
New World Technology Spectrum name: 7N000448.An1

Sample description
Parcel G 18-PG-C0281-46 351g
7/19/10 11:30

Acquisition information
Start time: 20-Jul-2010 10:15:05
Live time: 5400
Real time: 5407

- -

***** S U M M A R Y O F N U C L I D E S I N S A M P L E *****

Nuclide	Time of Count Activity pCi/g	Uncertainty 2 Sigma Counting pCi/g	Total pCi/g	MDA pCi/g
Ac-228	1.2705E+00	2.3638E-01	2.5216E-01	0.113E+00
AM-241 #A	2.0405E-02	8.7149E-02	8.7168E-02	0.667E-01
Bi-212	9.0038E-01	3.6948E-01	3.7453E-01	0.247E+00
BI-214	8.9610E-01	1.3290E-01	1.4566E-01	0.663E-01
CO-60 #A	1.4734E-02	1.3259E-02	1.3297E-02	0.294E-01
CS-137 A	3.3786E-02	4.4586E-02	4.4644E-02	0.352E-01
EU-152 A	4.7996E-03	3.3337E-03	3.3584E-03	0.975E-01
EU-154 A	5.5344E-02	7.4360E-02	7.4508E-02	0.622E-01
K-40	5.6967E+00	1.0862E+00	1.1562E+00	0.812E+00
Pa-234 #A	9.7206E-02	1.0427E-01	1.0462E-01	0.998E-01
Pb-210 #A	3.9892E-01	7.9636E-01	7.9698E-01	0.586E+00
Pb-212	1.1766E+00	1.1563E-01	1.4628E-01	0.667E-01
PB-214	9.6305E-01	1.8098E-01	1.9375E-01	0.852E-01
RA-226	8.2550E-01	9.8483E-01	9.8680E-01	0.798E+00
Th-230 #A	-1.1077E+01	5.8907E+00	5.8907E+00	0.262E+01
Th-234 #	1.5510E+00	1.3078E+00	1.3161E+00	0.967E+00
Tl-208	4.0109E-01	8.4135E-02	1.1095E-01	0.596E-01
U-235	8.5566E-02	7.1078E-02	7.1372E-02	0.495E-01

- All peaks for activity calculation had bad shape.
* - Activity omitted from total
& - Activity omitted from total and all peaks had bad shape.
< - MDA value printed.
A - Activity printed, but activity < MDA.
B - Activity < MDA and failed test.
C - Area < Critical level.
F - Failed fraction or key line test.
H - Halflife limit exceeded

---------- S U M M A R Y ----------

Total Activity (42.2 to 3353.9 keV) 1.294E+01 pCi/g

Laboratory: New World Technology

ORTEC g v - i (3263) Npp32 G53W3.10 20-JUL-2010 07:39:03
New World Technology Spectrum name: 1N000894.An1

Sample description
Parcel G 18-PG-C0281-47 374g
7/19/10 11:40

Acquisition information
Start time: 20-Jul-2010 06:46:29
Live time: 2700
Real time: 2701

- -

***** S U M M A R Y O F N U C L I D E S I N S A M P L E *****

Nuclide	Time of Count Activity pCi/g	Uncertainty Counting pCi/g	2 Sigma Total pCi/g	MDA pCi/g
Ac-228	7.6164E-01	2.7985E-01	2.8476E-01	0.118E+00
AM-241 #A	1.6255E-02	5.5902E-02	5.5920E-02	0.453E-01
Bi-212	4.2039E-01	3.7113E-01	3.7223E-01	0.285E+00
BI-214	4.2124E-01	1.4783E-01	1.5047E-01	0.593E-01
CO-60 #	4.9588E-02	5.7875E-02	5.7972E-02	0.383E-01
CS-137 #A	-6.4171E-03	2.6960E-01	2.6960E-01	0.258E-01
EU-152 A	-2.1067E-01	8.0680E-01	8.0700E-01	0.819E-01
EU-154 C	5.3096E-02	5.7499E-02	5.7674E-02	0.435E-01
K-40	9.0725E+00	1.4088E+00	1.5438E+00	0.338E+00
Pa-234 #C	1.3845E-01	8.5598E-02	8.6452E-02	0.679E-01
Pb-210	8.3801E-01	6.7182E-01	6.7505E-01	0.498E+00
Pb-212	4.6545E-01	9.3582E-02	1.0007E-01	0.559E-01
Pb-214	4.3163E-01	1.2142E-01	1.2531E-01	0.557E-01
RA-226 A	4.5277E-01	9.6979E-01	9.7040E-01	0.791E+00
Th-230 #A	-1.7342E-01	8.7659E+00	8.7659E+00	0.379E+01
Th-234 #	1.1625E+00	1.4156E+00	1.4199E+00	0.103E+01
Tl-208 #	1.7054E-01	4.7327E-02	5.6441E-02	0.162E-01
U-235 C	9.5193E-02	7.2666E-02	7.3022E-02	0.508E-01

- All peaks for activity calculation had bad shape.
* - Activity omitted from total
& - Activity omitted from total and all peaks had bad shape.
< - MDA value printed.
A - Activity printed, but activity < MDA.
B - Activity < MDA and failed test.
C - Area < Critical level.
F - Failed fraction or key line test.
H - Halflife limit exceeded

---------- S U M M A R Y ----------

Total Activity (36.6 to 2885.2 keV) 1.216E+01 pCi/g

Laboratory: New World Technology

ORTEC g v - i (3263) Npp32 G53W3.10 20-JUL-2010 08:32:00
New World Technology Spectrum name: 1N000895.An1

Sample description
Parcel G 18-PG-C0281-48 356g
7/19/10 11:50

Acquisition information
Start time: 20-Jul-2010 07:46:50
Live time: 2700
Real time: 2701

- -

***** S U M M A R Y O F N U C L I D E S I N S A M P L E *****

Nuclide	Time of Count Activity pCi/g	Uncertainty 2 Sigma Counting pCi/g	Total pCi/g	MDA pCi/g
Ac-228	1.0822E+00	3.3045E-01	3.3881E-01	0.137E+00
AM-241 #	9.3690E-02	1.0051E-01	1.0086E-01	0.681E-01
Bi-212	9.8147E-01	4.0963E-01	4.1504E-01	0.207E+00
BI-214	8.1919E-01	1.6295E-01	1.7182E-01	0.560E-01
CO-60 #A	-7.1715E-03	7.6543E-03	7.6697E-03	0.304E-01
CS-137	4.3301E-02	3.5316E-02	3.5436E-02	0.235E-01
EU-152 A	-7.3350E-02	1.0183E-01	1.0202E-01	0.839E-01
EU-154 A	1.3185E-02	6.4056E-02	6.4065E-02	0.475E-01
K-40	6.2517E+00	1.3473E+00	1.4158E+00	0.699E+00
Pa-234	1.7307E-01	1.2257E-01	1.2350E-01	0.799E-01
Pb-210 #	1.4125E+00	9.8012E-01	9.8641E-01	0.630E+00
Pb-212	8.1171E-01	1.1765E-01	1.3289E-01	0.607E-01
Pb-214	6.2772E-01	1.3512E-01	1.4245E-01	0.583E-01
RA-226 A	7.5745E-01	9.9365E-01	9.9530E-01	0.797E+00
Th-230 #A	8.0544E-01	3.6651E+00	3.6677E+00	0.343E+01
Th-234 A	7.9965E-01	1.2116E+00	1.2140E+00	0.110E+01
Tl-208 #	3.9308E-01	1.0752E-01	1.2878E-01	0.170E-01
U-235	8.8266E-02	7.1158E-02	7.1470E-02	0.528E-01

- All peaks for activity calculation had bad shape.
* - Activity omitted from total
& - Activity omitted from total and all peaks had bad shape.
< - MDA value printed.
A - Activity printed, but activity < MDA.
B - Activity < MDA and failed test.
C - Area < Critical level.
F - Failed fraction or key line test.
H - Halflife limit exceeded

---------- S U M M A R Y ----------

Total Activity (36.6 to 2885.2 keV) 1.268E+01 pCi/g

Laboratory: New World Technology

ORTEC g v - i (3263) Npp32 G53W3.10 20-JUL-2010 09:21:55
New World Technology Spectrum name: 1N000896.An1

Sample description
Parcel G 18-PG-C0281-49 379g
7/19/10 12:00

Acquisition information
Start time: 20-Jul-2010 08:36:47
Live time: 2700
Real time: 2701

- -

***** S U M M A R Y O F N U C L I D E S I N S A M P L E *****

Nuclide		Time of Count Activity pCi/g	Uncertainty Counting pCi/g	2 Sigma Total pCi/g	MDA pCi/g
Ac-228		9.1981E-01	2.9845E-01	3.0515E-01	0.131E+00
AM-241	#A	-5.5238E-03	4.0257E-01	4.0257E-01	0.342E-01
Bi-212		7.4281E-01	3.9091E-01	3.9417E-01	0.250E+00
BI-214		9.4222E-01	1.7809E-01	1.8880E-01	0.585E-01
CO-60	#A	-8.0540E-03	1.1956E-02	1.1969E-02	0.292E-01
CS-137	#A	-7.8281E-03	3.3811E-02	3.3811E-02	0.111E-01
EU-152	A	-1.7417E-02	1.7933E-02	1.7993E-02	0.874E-01
EU-154	C	4.8138E-02	6.0400E-02	6.0538E-02	0.439E-01
K-40		1.0137E+01	1.5227E+00	1.6781E+00	0.660E+00
Pa-234	A	5.0443E-02	8.4887E-02	8.5002E-02	0.778E-01
Pb-210		7.8587E-01	6.8070E-01	6.8351E-01	0.545E+00
Pb-212		8.8913E-01	1.1758E-01	1.3568E-01	0.589E-01
Pb-214		7.3103E-01	1.3450E-01	1.4439E-01	0.528E-01
RA-226	#A	-1.3515E-01	2.6808E+00	2.6808E+00	0.807E+00
Th-230	#	6.5702E+00	8.3924E+00	8.4659E+00	0.576E+01
Th-234		1.5274E+00	1.1389E+00	1.1482E+00	0.101E+01
Tl-208	C	1.5742E-01	3.9806E-02	4.8892E-02	0.794E-01
U-235		7.9636E-02	6.7849E-02	6.8115E-02	0.482E-01

- All peaks for activity calculation had bad shape.
* - Activity omitted from total
& - Activity omitted from total and all peaks had bad shape.
< - MDA value printed.
A - Activity printed, but activity < MDA.
B - Activity < MDA and failed test.
C - Area < Critical level.
F - Failed fraction or key line test.
H - Halflife limit exceeded

---------- S U M M A R Y ----------

Total Activity (36.6 to 2885.2 keV) 1.668E+01 pCi/g

Laboratory: New World Technology

ORTEC g v - i (3263) Npp32 G53W3.10 20-JUL-2010 10:54:24
New World Technology Spectrum name: 1N000897.An1

Sample description
Parcel G 18-PG-C0281-50 375g
7/19/10 12:40

Acquisition information
Start time: 20-Jul-2010 09:37:24
Live time: 2700
Real time: 2701

- -

***** S U M M A R Y O F N U C L I D E S I N S A M P L E *****

Nuclide		Time of Count Activity pCi/g	Uncertainty Counting pCi/g	2 Sigma Total pCi/g	MDA pCi/g
Ac-228		7.7351E-01	2.3872E-01	2.4463E-01	0.183E+00
AM-241	#A	2.3814E-02	7.1103E-02	7.1134E-02	0.549E-01
Bi-212		5.1754E-01	3.4595E-01	3.4774E-01	0.231E+00
BI-214		7.3879E-01	1.9524E-01	2.0133E-01	0.748E-01
CO-60	#A	-9.6712E-03	2.2250E-02	2.2260E-02	0.342E-01
CS-137	A	8.3144E-03	3.8189E-02	3.8193E-02	0.314E-01
EU-152	A	-1.8518E-01	7.1640E-01	7.1657E-01	0.872E-01
EU-154	A	4.2106E-02	6.0815E-02	6.0920E-02	0.425E-01
K-40		5.2284E+00	9.4401E-01	1.0117E+00	0.126E+00
Pa-234	C	7.8345E-02	7.8475E-02	7.8774E-02	0.691E-01
Pb-210	#	1.1398E+00	8.5279E-01	8.5750E-01	0.585E+00
Pb-212		1.0297E+00	1.2374E-01	1.4648E-01	0.572E-01
Pb-214		7.5677E-01	1.4668E-01	1.5643E-01	0.549E-01
RA-226	A	1.1710E-01	8.9455E-01	8.9459E-01	0.745E+00
Th-230	#	7.5055E+00	9.0168E+00	9.1060E+00	0.587E+01
Th-234	A	8.3490E-01	1.1007E+00	1.1036E+00	0.101E+01
Tl-208	C	2.0336E-01	5.3385E-02	6.4768E-02	0.692E-01
U-235	A	4.3411E-02	6.5858E-02	6.5939E-02	0.473E-01

- All peaks for activity calculation had bad shape.
* - Activity omitted from total
& - Activity omitted from total and all peaks had bad shape.
< - MDA value printed.
A - Activity printed, but activity < MDA.
B - Activity < MDA and failed test.
C - Area < Critical level.
F - Failed fraction or key line test.
H - Halflife limit exceeded

---------- S U M M A R Y ----------

Total Activity (36.6 to 2885.2 keV) 1.018E+01 pCi/g

Laboratory: New World Technology

ORTEC g v - i (3263) Npp32 G53W3.10 20-JUL-2010 13:28:51
New World Technology Spectrum name: 2N000547.An1

Sample description
Parcel G 18-PG-C0281-51 363g
7/19/10 12:50

Acquisition information
Start time: 20-Jul-2010 11:56:48
Live time: 5400
Real time: 5409

- -

***** S U M M A R Y O F N U C L I D E S I N S A M P L E *****

Nuclide		Time of Count Activity pCi/g	Uncertainty Counting pCi/g	2 Sigma Total pCi/g	MDA pCi/g
Ac-228		6.5896E-01	2.2678E-01	2.3131E-01	0.172E+00
AM-241	#A	-1.3030E-01	3.1594E+00	3.1594E+00	0.297E+00
Bi-212		9.7130E-01	3.4986E-01	3.5605E-01	0.236E+00
BI-214		1.2528E+00	1.8268E-01	2.0079E-01	0.727E-01
CO-60	#A	-1.0856E-02	5.9892E-02	5.9897E-02	0.290E-01
CS-137	A	1.6185E-02	4.9059E-02	4.9071E-02	0.400E-01
EU-152	#A	-2.4038E-02	1.9375E-02	1.9482E-02	0.107E+00
EU-154	C	1.0650E-01	6.4178E-02	6.4809E-02	0.691E-01
K-40		7.7121E+00	1.0705E+00	1.1974E+00	0.745E+00
Pa-234	A	4.5213E-02	3.8062E-02	3.8267E-02	0.127E+00
Pb-210	#C	0.0000E+00	3.9727E+00	3.9727E+00	0.000E+00
Pb-212		1.4531E+00	1.2439E-01	1.6648E-01	0.702E-01
PB-214		1.1239E+00	1.2054E-01	1.4508E-01	0.574E-01
RA-226		1.5440E+00	1.0219E+00	1.0285E+00	0.814E+00
Th-230	#A	-1.2619E+01	1.8896E+02	1.8897E+02	0.739E+01
Th-234		2.2881E+00	1.4855E+00	1.5014E+00	0.120E+01
Tl-208		4.7777E-01	7.0444E-02	7.7226E-02	0.348E-01
U-235		6.2191E-02	6.4981E-02	6.5151E-02	0.530E-01

- All peaks for activity calculation had bad shape.
* - Activity omitted from total
& - Activity omitted from total and all peaks had bad shape.
< - MDA value printed.
A - Activity printed, but activity < MDA.
B - Activity < MDA and failed test.
C - Area < Critical level.
F - Failed fraction or key line test.
H - Halflife limit exceeded

---------- S U M M A R Y ----------

Total Activity (32.4 to 2597.5 keV) 1.748E+01 pCi/g

Laboratory: New World Technology

ORTEC g v - i (3263) Npp32 G53W3.10 20-JUL-2010 13:44:13
New World Technology Spectrum name: 6N000473.An1

Sample description
Parcel G 18-PG-C0281-52 359g
7/19/10 13:00

Acquisition information
Start time: 20-Jul-2010 12:52:20
Live time: 2700
Real time: 2704

- -

***** S U M M A R Y O F N U C L I D E S I N S A M P L E *****

Nuclide		Time of Count Activity pCi/g	Uncertainty 2 Sigma Counting pCi/g	Total pCi/g	MDA pCi/g
Ac-228		5.6555E-01	1.8021E-01	1.8440E-01	0.196E+00
AM-241	A	2.7331E-03	9.2615E-02	9.2615E-02	0.766E-01
Bi-212		7.9867E-01	3.9413E-01	3.9787E-01	0.256E+00
BI-214		5.4606E-01	1.6722E-01	1.7112E-01	0.662E-01
CO-60	#	5.4880E-02	2.5600E-02	2.5867E-02	0.140E-01
CS-137		3.7142E-02	3.8580E-02	3.8661E-02	0.290E-01
EU-152	#A	5.9037E-02	2.5835E-02	2.6316E-02	0.103E+00
EU-154	C	1.2014E-01	7.7280E-02	7.7947E-02	0.732E-01
K-40	#	6.5405E+00	1.3496E+00	1.4243E+00	0.846E+00
Pa-234	C	2.4636E-01	1.4017E-01	1.4182E-01	0.680E-01
Pb-210	#A	-6.5809E-03	6.8826E-01	6.8826E-01	0.564E+00
Pb-212		5.9545E-01	1.0815E-01	1.1727E-01	0.690E-01
PB-214		4.6716E-01	1.1071E-01	1.1569E-01	0.669E-01
RA-226	A	2.4638E-01	1.0533E+00	1.0535E+00	0.871E+00
Th-230	A	4.1346E+00	7.7455E+00	7.7771E+00	0.623E+01
Th-234	A	8.4691E-01	1.2786E+00	1.2811E+00	0.976E+00
Tl-208		2.9594E-01	1.0797E-01	1.2044E-01	0.623E-01
U-235		9.7768E-02	8.0547E-02	8.0886E-02	0.514E-01

- All peaks for activity calculation had bad shape.
* - Activity omitted from total
& - Activity omitted from total and all peaks had bad shape.
< - MDA value printed.
A - Activity printed, but activity < MDA.
B - Activity < MDA and failed test.
C - Area < Critical level.
F - Failed fraction or key line test.
H - Halflife limit exceeded

---------- S U M M A R Y ----------

Total Activity (33.3 to 2659.2 keV) 9.962E+00 pCi/g

Laboratory: New World Technology

ORTEC g v - i (3263) Npp32 G53W3.10 20-JUL-2010 15:27:15
New World Technology Spectrum name: 6N000475.An1

Sample description
Parcel G 18-PG-C0281-52DUP 357g
7/19/10 13:00

Acquisition information
Start time: 20-Jul-2010 14:40:03
Live time: 2700
Real time: 2705

- -

***** S U M M A R Y O F N U C L I D E S I N S A M P L E *****

Nuclide		Time of Count Activity pCi/g	Uncertainty 2 Sigma Counting pCi/g	Total pCi/g	MDA pCi/g
Ac-228		6.9751E-01	2.3428E-01	2.3919E-01	0.128E+00
AM-241	#A	-1.0271E-02	7.4548E-02	7.4548E-02	0.116E-01
Bi-212		3.4640E-01	4.0395E-01	4.0464E-01	0.311E+00
BI-214		5.8897E-01	1.6615E-01	1.7071E-01	0.698E-01
CO-60	#A	-1.2895E-02	1.0119E-01	1.0119E-01	0.182E-01
CS-137	#A	-1.1330E-02	2.7511E-01	2.7512E-01	0.329E-01
EU-152	#A	-1.2023E-03	9.0568E-04	9.1140E-04	0.874E-01
EU-154	C	1.3318E-01	4.7086E-02	4.8419E-02	0.634E-01
K-40		6.2155E+00	1.2787E+00	1.3498E+00	0.828E+00
Pa-234	C	8.1429E-02	7.1389E-02	7.1744E-02	0.801E-01
Pb-210		1.0222E+00	8.3087E-01	8.3468E-01	0.655E+00
Pb-212		6.0864E-01	1.0681E-01	1.1643E-01	0.662E-01
PB-214		4.9424E-01	1.2576E-01	1.3067E-01	0.651E-01
RA-226	A	7.9376E-01	1.0172E+00	1.0190E+00	0.819E+00
Th-230	A	1.3295E+00	6.9392E+00	6.9429E+00	0.567E+01
Th-234	#A	-2.9052E-01	1.5092E+00	1.5094E+00	0.109E+01
Tl-208		3.1126E-01	1.1018E-01	1.2366E-01	0.627E-01
U-235	C	9.3904E-02	1.0300E-01	1.0324E-01	0.571E-01

- All peaks for activity calculation had bad shape.
* - Activity omitted from total
& - Activity omitted from total and all peaks had bad shape.
< - MDA value printed.
A - Activity printed, but activity < MDA.
B - Activity < MDA and failed test.
C - Area < Critical level.
F - Failed fraction or key line test.
H - Halflife limit exceeded

---------- S U M M A R Y ----------

Total Activity (33.3 to 2659.2 keV) 9.938E+00 pCi/g

Laboratory: New World Technology

ORTEC g v - i (3263) Npp32 G53W3.10 20-JUL-2010 15:20:34
New World Technology Spectrum name: 7N000449.An1

Sample description
Parcel G 18-PG-C0281-53 374g
7/19/10 13:10

Acquisition information
Start time: 20-Jul-2010 13:48:27
Live time: 5400
Real time: 5407

- -

***** S U M M A R Y O F N U C L I D E S I N S A M P L E *****

Nuclide		Time of Count Activity pCi/g	Uncertainty 2 Sigma Counting pCi/g	Total pCi/g	MDA pCi/g
Ac-228		9.7369E-01	1.9551E-01	2.0677E-01	0.103E+00
AM-241	#A	3.8904E-02	9.5793E-02	9.5856E-02	0.687E-01
Bi-212		9.8673E-01	3.8601E-01	3.9182E-01	0.261E+00
BI-214		9.2015E-01	1.4410E-01	1.5656E-01	0.641E-01
CO-60	A	5.9542E-04	3.4283E-02	3.4284E-02	0.295E-01
CS-137	A	1.5521E-02	3.3447E-02	3.3463E-02	0.271E-01
EU-152	#A	3.2958E-02	2.1239E-02	2.1422E-02	0.896E-01
EU-154	C	7.0777E-02	6.6671E-02	6.6940E-02	0.605E-01
K-40		6.1890E+00	1.1734E+00	1.2499E+00	0.888E+00
Pa-234	C	1.4420E-01	1.6622E-01	1.6670E-01	0.787E-01
Pb-210		1.1021E+00	6.5018E-01	6.5594E-01	0.518E+00
Pb-212		1.1365E+00	1.1331E-01	1.4257E-01	0.625E-01
PB-214		8.7956E-01	1.6494E-01	1.7663E-01	0.814E-01
RA-226		1.1983E+00	9.4279E-01	9.4713E-01	0.753E+00
Th-230	#A	-6.8984E+00	3.5745E+01	3.5764E+01	0.600E+01
Th-234	A	4.9798E-01	1.0691E+00	1.0701E+00	0.927E+00
Tl-208		4.6838E-01	9.8892E-02	1.3005E-01	0.525E-01
U-235	A	4.6669E-02	7.5922E-02	7.6004E-02	0.527E-01

- All peaks for activity calculation had bad shape.
* - Activity omitted from total
& - Activity omitted from total and all peaks had bad shape.
< - MDA value printed.
A - Activity printed, but activity < MDA.
B - Activity < MDA and failed test.
C - Area < Critical level.
F - Failed fraction or key line test.
H - Halflife limit exceeded

---------- S U M M A R Y ----------

Total Activity (42.2 to 3353.9 keV) 1.385E+01 pCi/g

Laboratory: New World Technology

ORTEC g v - i (3263) Npp32 G53W3.10 20-JUL-2010 14:24:33
New World Technology Spectrum name: 3N000626.An1

Sample description
Parcel G 18-PG-C0281-54 374g
7/19/10 13:20

Acquisition information
Start time: 20-Jul-2010 12:49:33
Live time: 5400
Real time: 5405

- -

***** S U M M A R Y O F N U C L I D E S I N S A M P L E *****

Nuclide		Time of Count Activity pCi/g	Uncertainty 2 Sigma Counting pCi/g	Total pCi/g	MDA pCi/g
Ac-228		1.0937E+00	2.1927E-01	2.3193E-01	0.101E+00
AM-241	A	7.4611E-03	8.4634E-02	8.4636E-02	0.696E-01
Bi-212		5.5742E-01	2.9424E-01	2.9668E-01	0.213E+00
BI-214		9.1705E-01	1.5981E-01	1.7106E-01	0.630E-01
CO-60	#A	9.2615E-03	8.3492E-03	8.3726E-03	0.259E-01
CS-137	#A	-4.8860E-03	1.2824E-01	1.2824E-01	0.257E-01
EU-152	A	-9.8790E-02	9.0695E-02	9.1081E-02	0.839E-01
EU-154	A	3.9929E-02	5.2338E-02	5.2447E-02	0.535E-01
K-40		1.0522E+01	1.0690E+00	1.2956E+00	0.303E+00
Pa-234	A	6.3954E-02	1.0796E-01	1.0810E-01	0.942E-01
Pb-210	A	1.5621E-01	6.9476E-01	6.9487E-01	0.593E+00
Pb-212		1.0473E+00	1.0235E-01	1.2975E-01	0.579E-01
PB-214		8.3785E-01	1.1461E-01	1.2945E-01	0.629E-01
RA-226		1.9504E+00	9.1490E-01	9.2671E-01	0.717E+00
Th-230	#A	-3.0284E+00	1.2619E+01	1.2630E+01	0.584E+01
Th-234	A	3.5767E-01	1.1107E+00	1.1113E+00	0.100E+01
Tl-208		3.4885E-01	6.0000E-02	8.6935E-02	0.359E-01
U-235	A	7.2463E-03	6.1608E-02	6.1610E-02	0.530E-01

- All peaks for activity calculation had bad shape.
* - Activity omitted from total
& - Activity omitted from total and all peaks had bad shape.
< - MDA value printed.
A - Activity printed, but activity < MDA.
B - Activity < MDA and failed test.
C - Area < Critical level.
F - Failed fraction or key line test.
H - Halflife limit exceeded

---------- S U M M A R Y ----------

Total Activity (34.9 to 2779.2 keV) 1.727E+01 pCi/g

Laboratory: New World Technology

ORTEC g v - i (3263) Npp32 G53W3.10 20-JUL-2010 11:54:39
New World Technology Spectrum name: 3N000625.An1

Sample description
Parcel G 18-PG-C0281-55 377g
7/19/10 13:30

Acquisition information
Start time: 20-Jul-2010 11:09:30
Live time: 2700
Real time: 2702

- -

***** S U M M A R Y O F N U C L I D E S I N S A M P L E *****

Nuclide		Time of Count Activity pCi/g	Uncertainty Counting pCi/g	2 Sigma Total pCi/g	MDA pCi/g
Ac-228		8.4872E-01	2.1548E-01	2.2332E-01	0.201E+00
AM-241		1.3312E-01	1.2132E-01	1.2190E-01	0.953E-01
Bi-212		6.1560E-01	3.8595E-01	3.8822E-01	0.266E+00
BI-214		8.7517E-01	2.0734E-01	2.1535E-01	0.833E-01
CO-60	#A	-4.0652E-02	3.3155E-01	3.3156E-01	0.324E-01
CS-137		5.2445E-02	5.0148E-02	5.0272E-02	0.368E-01
EU-152	#A	-8.4517E-02	9.4627E-02	9.4898E-02	0.137E+00
EU-154	C	1.0275E-01	7.8265E-02	7.8747E-02	0.811E-01
K-40	#	7.6350E+00	1.1371E+00	1.2550E+00	0.242E+00
Pa-234	A	1.1466E-01	1.0379E-01	1.0427E-01	0.121E+00
Pb-210	#A	-3.8605E-01	2.1330E+00	2.1332E+00	0.775E+00
Pb-212		9.8641E-01	1.4048E-01	1.5930E-01	0.814E-01
PB-214		8.2999E-01	1.8144E-01	1.9098E-01	0.806E-01
RA-226	A	8.9026E-01	1.2411E+00	1.2429E+00	0.101E+01
Th-230	#A	-9.9866E+00	1.0129E+02	1.0130E+02	0.884E+01
Th-234		1.4392E+00	1.7691E+00	1.7744E+00	0.133E+01
Tl-208		4.2948E-01	7.8966E-02	1.1061E-01	0.503E-01
U-235	A	6.7788E-02	9.1006E-02	9.1150E-02	0.697E-01

- All peaks for activity calculation had bad shape.
* - Activity omitted from total
& - Activity omitted from total and all peaks had bad shape.
< - MDA value printed.
A - Activity printed, but activity < MDA.
B - Activity < MDA and failed test.
C - Area < Critical level.
F - Failed fraction or key line test.
H - Halflife limit exceeded

---------- S U M M A R Y ----------

Total Activity (34.9 to 2779.2 keV) 1.241E+01 pCi/g

Laboratory: New World Technology

ORTEC g v - i (3263) Npp32 G53W3.10 20-JUL-2010 11:06:32
New World Technology Spectrum name: 3N000624.An1

Sample description
Parcel G 18-PG-C0281-56 389g
7/19/10 13:40

Acquisition information
Start time: 20-Jul-2010 09:22:09
Live time: 5400
Real time: 5405

- -

***** S U M M A R Y O F N U C L I D E S I N S A M P L E *****

Nuclide		Time of Count Activity pCi/g	Uncertainty 2 Sigma Counting pCi/g	Total pCi/g	MDA pCi/g
Ac-228		1.4297E+00	1.9568E-01	2.1921E-01	0.101E+00
AM-241	A	1.4214E-02	8.8382E-02	8.8391E-02	0.726E-01
Bi-212	#	1.5110E+00	5.9568E-01	6.0450E-01	0.255E+00
BI-214		1.1228E+00	1.4236E-01	1.6076E-01	0.498E-01
CO-60	#A	-1.4938E-03	1.3707E-03	1.3744E-03	0.238E-01
CS-137		7.6865E-02	3.9215E-02	3.9554E-02	0.279E-01
EU-152	A	3.5932E-02	1.8198E-02	1.8451E-02	0.876E-01
EU-154	A	4.1591E-02	5.2694E-02	5.2811E-02	0.455E-01
K-40		8.6092E+00	9.2011E-01	1.0979E+00	0.261E+00
Pa-234		2.5843E-01	1.0606E-01	1.0844E-01	0.900E-01
Pb-210	#A	5.1552E-01	9.7665E-01	9.7748E-01	0.648E+00
Pb-212		1.3355E+00	1.0716E-01	1.4773E-01	0.588E-01
PB-214		9.9508E-01	1.2700E-01	1.4574E-01	0.570E-01
RA-226		1.6430E+00	9.2392E-01	9.3223E-01	0.733E+00
Th-230	#A	-7.5563E+00	3.3330E+01	3.3355E+01	0.583E+01
Th-234	A	8.2629E-01	1.0879E+00	1.0907E+00	0.968E+00
Tl-208		5.9452E-01	9.4308E-02	1.4279E-01	0.345E-01
U-235	C	9.5192E-02	8.2901E-02	8.3213E-02	0.511E-01

- All peaks for activity calculation had bad shape.
* - Activity omitted from total
& - Activity omitted from total and all peaks had bad shape.
< - MDA value printed.
A - Activity printed, but activity < MDA.
B - Activity < MDA and failed test.
C - Area < Critical level.
F - Failed fraction or key line test.
H - Halflife limit exceeded

---------- S U M M A R Y ----------

Total Activity (34.9 to 2779.2 keV) 1.758E+01 pCi/g

Laboratory: New World Technology

ORTEC g v - i (3263) Npp32 G53W3.10 20-JUL-2010 11:45:39
New World Technology Spectrum name: 1N000898.An1

Sample description
Parcel G 18-PG-C0281-57 381g
7/19/10 13:50

Acquisition information
Start time: 20-Jul-2010 11:00:29
Live time: 2700
Real time: 2702

- -

***** S U M M A R Y O F N U C L I D E S I N S A M P L E *****

Nuclide		Time of Count Activity pCi/g	Uncertainty 2 Sigma Counting pCi/g	Total pCi/g	MDA pCi/g
Ac-228		1.2649E+00	3.1140E-01	3.2343E-01	0.120E+00
AM-241	#A	-2.5016E-03	1.0774E-01	1.0774E-01	0.446E-01
Bi-212		1.1005E+00	4.9636E-01	5.0199E-01	0.323E+00
BI-214		8.9007E-01	1.5597E-01	1.6683E-01	0.684E-01
CO-60	#A	-1.3069E-02	5.9849E-02	5.9856E-02	0.311E-01
CS-137		5.6920E-02	3.8936E-02	3.9123E-02	0.254E-01
EU-152	#A	-2.1673E-01	6.5952E-01	6.5978E-01	0.682E-01
EU-154	#A	-5.6442E-04	5.3214E-02	5.3214E-02	0.487E-02
K-40		9.2122E+00	1.4190E+00	1.5570E+00	0.391E+00
Pa-234	#A	5.8287E-02	8.8076E-02	8.8224E-02	0.823E-01
Pb-210	#	1.6098E+00	9.6903E-01	9.7728E-01	0.623E+00
Pb-212		1.2985E+00	1.4163E-01	1.7273E-01	0.667E-01
Pb-214		8.7266E-01	1.4041E-01	1.5377E-01	0.529E-01
RA-226	A	7.3279E-01	1.0446E+00	1.0461E+00	0.842E+00
Th-230	#A	5.1691E+00	7.4954E+00	7.5464E+00	0.546E+01
Th-234		2.8910E+00	1.6475E+00	1.6703E+00	0.114E+01
Tl-208		4.2233E-01	6.5955E-02	1.0075E-01	0.159E-01
U-235	C	8.2949E-02	9.5929E-02	9.6134E-02	0.586E-01

- All peaks for activity calculation had bad shape.
* - Activity omitted from total
& - Activity omitted from total and all peaks had bad shape.
< - MDA value printed.
A - Activity printed, but activity < MDA.
B - Activity < MDA and failed test.
C - Area < Critical level.
F - Failed fraction or key line test.
H - Halflife limit exceeded

---------- S U M M A R Y ----------

Total Activity (36.6 to 2885.2 keV) 1.962E+01 pCi/g

Laboratory: New World Technology

ORTEC g v - i (3263) Npp32 G53W3.10 20-JUL-2010 12:36:20
New World Technology Spectrum name: 1N000899.An1

Sample description
Parcel G 18-PG-C0281-58 389g
7/19/10 14:00

Acquisition information
Start time: 20-Jul-2010 11:51:11
Live time: 2700
Real time: 2701

- -

***** S U M M A R Y O F N U C L I D E S I N S A M P L E *****

Nuclide	Time of Count Activity pCi/g	Uncertainty 2 Sigma Counting pCi/g	Total pCi/g	MDA pCi/g
Ac-228	1.3627E+00	2.5883E-01	2.7543E-01	0.107E+00
AM-241 #A	4.0058E-02	9.1644E-02	9.1713E-02	0.651E-01
Bi-212	8.0702E-01	3.6074E-01	3.6490E-01	0.210E+00
BI-214	8.1667E-01	1.5226E-01	1.6166E-01	0.528E-01
CO-60 #A	2.0406E-03	2.3465E-02	2.3466E-02	0.266E-01
CS-137 #A	-7.0422E-03	7.9687E-01	7.9687E-01	0.282E-01
EU-152 A	-2.1787E-01	1.6155E+00	1.6156E+00	0.766E-01
EU-154 C	6.7138E-02	6.1478E-02	6.1741E-02	0.351E-01
K-40	5.3085E+00	1.3984E+00	1.4464E+00	0.866E+00
Pa-234 #C	5.8656E-02	6.2907E-02	6.3116E-02	0.371E-01
Pb-210	9.7703E-01	9.4250E-01	9.4564E-01	0.634E+00
Pb-212	1.1215E+00	1.2691E-01	1.5296E-01	0.614E-01
Pb-214	8.4457E-01	1.2254E-01	1.3673E-01	0.615E-01
RA-226	1.0674E+00	1.0416E+00	1.0448E+00	0.825E+00
Th-230	7.5845E+00	8.5213E+00	8.6176E+00	0.582E+01
Th-234	2.0445E+00	1.1845E+00	1.2004E+00	0.102E+01
Tl-208	3.9828E-01	7.1117E-02	1.0108E-01	0.156E-01
U-235 C	7.3697E-02	7.9836E-02	8.0030E-02	0.562E-01

- All peaks for activity calculation had bad shape.
* - Activity omitted from total
& - Activity omitted from total and all peaks had bad shape.
< - MDA value printed.
A - Activity printed, but activity < MDA.
B - Activity < MDA and failed test.
C - Area < Critical level.
F - Failed fraction or key line test.
H - Halflife limit exceeded

---------- S U M M A R Y ----------

Total Activity (36.6 to 2885.2 keV) 1.475E+01 pCi/g

Laboratory: New World Technology

ORTEC g v - i (3263) Npp32 G53W3.10 20-JUL-2010 13:33:46
New World Technology Spectrum name: 1N000900.An1

Sample description
Parcel G 18-PG-C0281-59 384g
7/19/10 14:10

Acquisition information
Start time: 20-Jul-2010 12:47:01
Live time: 2700
Real time: 2701

- -

***** S U M M A R Y O F N U C L I D E S I N S A M P L E *****

Nuclide		Time of Count Activity pCi/g	Uncertainty 2 Sigma Counting pCi/g	Total pCi/g	MDA pCi/g
Ac-228		1.0145E+00	2.4081E-01	2.5080E-01	0.109E+00
AM-241	#A	3.0680E-02	6.0418E-02	6.0480E-02	0.481E-01
Bi-212	#A	-1.7155E-02	7.5054E-01	7.5054E-01	0.368E+00
BI-214		6.6665E-01	1.8248E-01	1.8780E-01	0.735E-01
CO-60	#A	-3.4015E-02	5.6489E-01	5.6489E-01	0.291E-01
CS-137	A	7.7774E-03	2.3305E-02	2.3311E-02	0.192E-01
EU-152	#A	-8.8227E-02	1.2036E-01	1.2059E-01	0.894E-01
EU-154	C	1.0844E-01	5.5415E-02	5.6171E-02	0.337E-01
K-40		5.2847E+00	1.3186E+00	1.3689E+00	0.774E+00
Pa-234	#	2.0317E-01	1.2700E-01	1.2824E-01	0.754E-01
Pb-210	#	1.7913E+00	8.5932E-01	8.7081E-01	0.541E+00
Pb-212		8.6288E-01	1.1471E-01	1.3219E-01	0.559E-01
Pb-214		6.1712E-01	1.3005E-01	1.3739E-01	0.570E-01
RA-226	A	1.7455E-01	8.5104E-01	8.5114E-01	0.706E+00
Th-230	A	4.2807E+00	6.4039E+00	6.4449E+00	0.508E+01
Th-234	A	9.3297E-01	1.0666E+00	1.0703E+00	0.975E+00
Tl-208	C	2.0122E-01	5.9026E-02	6.9288E-02	0.653E-01
U-235	C	6.0408E-02	5.7541E-02	5.7722E-02	0.463E-01

- All peaks for activity calculation had bad shape.
* - Activity omitted from total
& - Activity omitted from total and all peaks had bad shape.
< - MDA value printed.
A - Activity printed, but activity < MDA.
B - Activity < MDA and failed test.
C - Area < Critical level.
F - Failed fraction or key line test.
H - Halflife limit exceeded

---------- S U M M A R Y ----------

Total Activity (36.6 to 2885.2 keV) 1.044E+01 pCi/g

Laboratory: New World Technology

ORTEC g v - i (3263) Npp32 G53W3.10 20-JUL-2010 14:38:35
New World Technology Spectrum name: 6N000474.An1

Sample description
Parcel G 18-PG-C0281-60 366g
7/19/10 14:20

Acquisition information
Start time: 20-Jul-2010 13:47:08
Live time: 2700
Real time: 2704

- -

***** S U M M A R Y O F N U C L I D E S I N S A M P L E *****

Nuclide		Time of Count Activity pCi/g	Uncertainty Counting pCi/g	2 Sigma Total pCi/g	MDA pCi/g
Ac-228	C	2.9652E-01	1.1431E-01	1.1613E-01	0.196E+00
AM-241	A	4.9738E-02	1.0116E-01	1.0126E-01	0.818E-01
Bi-212		7.8484E-01	3.3302E-01	3.3728E-01	0.191E+00
BI-214		6.7226E-01	1.4308E-01	1.4990E-01	0.497E-01
CO-60	#	3.1264E-02	3.7054E-02	3.7114E-02	0.226E-01
CS-137	#A	-6.8369E-03	1.3317E-01	1.3317E-01	0.410E-01
EU-152	#C	2.5546E-01	1.1146E-01	1.1354E-01	0.868E-01
EU-154	A	1.8932E-02	2.3617E-02	2.3671E-02	0.703E-01
K-40		6.4315E+00	1.3190E+00	1.3928E+00	0.817E+00
Pa-234		1.7770E-01	1.4642E-01	1.4724E-01	0.910E-01
Pb-210		1.1106E+00	8.3256E-01	8.3704E-01	0.653E+00
Pb-212		5.4218E-01	1.0333E-01	1.1127E-01	0.686E-01
PB-214		4.2900E-01	1.4911E-01	1.5226E-01	0.773E-01
RA-226	A	4.5812E-01	1.0005E+00	1.0011E+00	0.819E+00
Th-230	#A	2.9193E+00	6.2922E+00	6.3116E+00	0.494E+01
Th-234	A	3.8098E-02	1.1814E+00	1.1814E+00	0.105E+01
Tl-208		1.9322E-01	6.4085E-02	7.2945E-02	0.611E-01
U-235	C	1.0559E-01	7.4088E-02	7.4517E-02	0.557E-01

- All peaks for activity calculation had bad shape.
* - Activity omitted from total
& - Activity omitted from total and all peaks had bad shape.
< - MDA value printed.
A - Activity printed, but activity < MDA.
B - Activity < MDA and failed test.
C - Area < Critical level.
F - Failed fraction or key line test.
H - Halflife limit exceeded

---------- S U M M A R Y ----------

Total Activity (33.3 to 2659.2 keV) 1.034E+01 pCi/g

Laboratory: New World Technology

ORTEC g v - i (3263) Npp32 G53W3.10 21-JUL-2010 17:18:52
New World Technology Spectrum name: 1N000902.An1

Sample description
Parcel G 18-PG-C0281-61 383g
7/21/10 14:05

Acquisition information
Start time: 21-Jul-2010 15:47:14
Live time: 5400
Real time: 5403

- -

***** S U M M A R Y O F N U C L I D E S I N S A M P L E *****

Nuclide		Time of Count Activity pCi/g	Uncertainty Counting pCi/g	2 Sigma Total pCi/g	MDA pCi/g
Ac-228		1.4117E+00	1.9138E-01	2.1481E-01	0.759E-01
AM-241	A	9.7666E-03	5.4865E-02	5.4872E-02	0.451E-01
Bi-212		9.7145E-01	3.1119E-01	3.1814E-01	0.196E+00
BI-214		1.1118E+00	1.3923E-01	1.5765E-01	0.489E-01
CO-60	#A	-5.6525E-03	2.4571E-02	2.4574E-02	0.201E-01
CS-137	A	1.4204E-02	3.2294E-02	3.2308E-02	0.261E-01
EU-152	A	-1.7343E-01	4.5726E-01	4.5750E-01	0.665E-01
EU-154	C	3.0826E-02	3.3190E-02	3.3292E-02	0.267E-01
K-40		6.4380E+00	8.9956E-01	1.0049E+00	0.260E+00
Pa-234	#A	4.1895E-02	7.5096E-02	7.5185E-02	0.560E-01
Pb-210		7.8054E-01	6.6963E-01	6.7244E-01	0.462E+00
Pb-212		1.4801E+00	1.0194E-01	1.5196E-01	0.463E-01
Pb-214		1.0876E+00	1.3063E-01	1.5221E-01	0.514E-01
RA-226		9.9155E-01	7.1690E-01	7.2081E-01	0.569E+00
Th-230	A	2.4210E+00	5.4171E+00	5.4327E+00	0.441E+01
Th-234		1.1557E+00	9.4713E-01	9.5349E-01	0.831E+00
Tl-208	C	2.2092E-01	3.0602E-02	5.0236E-02	0.825E-01
U-235	C	6.7042E-02	6.1625E-02	6.1833E-02	0.421E-01

- All peaks for activity calculation had bad shape.
* - Activity omitted from total
& - Activity omitted from total and all peaks had bad shape.
< - MDA value printed.
A - Activity printed, but activity < MDA.
B - Activity < MDA and failed test.
C - Area < Critical level.
F - Failed fraction or key line test.
H - Halflife limit exceeded

---------- S U M M A R Y ----------

Total Activity (36.6 to 2885.2 keV) 1.543E+01 pCi/g

Laboratory: New World Technology

ORTEC g v - i (3263) Npp32 G53W3.10 21-JUL-2010 17:29:24
New World Technology Spectrum name: 2N000549.An1

Sample description
Parcel G 18-PG-C0281-62 357g
7/21/10 14:15

Acquisition information
Start time: 21-Jul-2010 15:58:01
Live time: 5400
Real time: 5408

- -

***** S U M M A R Y O F N U C L I D E S I N S A M P L E *****

Nuclide		Time of Count Activity pCi/g	Uncertainty 2 Sigma Counting pCi/g	Total pCi/g	MDA pCi/g
Ac-228		8.8061E-01	2.0569E-01	2.1450E-01	0.118E+00
AM-241	#A	-8.3228E-02	8.4876E-01	8.4879E-01	0.240E+00
Bi-212		4.4404E-01	2.5540E-01	2.5719E-01	0.182E+00
BI-214		7.7924E-01	1.2466E-01	1.3500E-01	0.546E-01
CO-60	#A	-4.5091E-02	1.4432E+00	1.4432E+00	0.223E-01
CS-137		8.2723E-02	4.1940E-02	4.2307E-02	0.298E-01
EU-152	A	-2.8558E-02	2.5701E-02	2.5814E-02	0.116E+00
EU-154	C	1.1084E-01	8.0603E-02	8.1148E-02	0.622E-01
K-40		2.1347E+00	1.1608E+00	1.1703E+00	0.103E+01
Pa-234	C	1.2536E-01	1.4971E-01	1.5012E-01	0.103E+00
Pb-210	#C	0.0000E+00	3.7779E+00	3.7779E+00	0.000E+00
Pb-212		8.1091E-01	9.8845E-02	1.1654E-01	0.621E-01
PB-214		8.0669E-01	1.4935E-01	1.6020E-01	0.680E-01
RA-226		7.9470E-01	8.8160E-01	8.8364E-01	0.715E+00
Th-230	#A	-1.1853E+01	2.0327E+02	2.0328E+02	0.120E+02
Th-234		1.1893E+00	1.3743E+00	1.3789E+00	0.114E+01
Tl-208		3.4617E-01	7.0906E-02	7.4521E-02	0.346E-01
U-235	A	4.3590E-02	7.4919E-02	7.4991E-02	0.515E-01

- All peaks for activity calculation had bad shape.
* - Activity omitted from total
& - Activity omitted from total and all peaks had bad shape.
< - MDA value printed.
A - Activity printed, but activity < MDA.
B - Activity < MDA and failed test.
C - Area < Critical level.
F - Failed fraction or key line test.
H - Halflife limit exceeded

---------- S U M M A R Y ----------

Total Activity (32.4 to 2597.5 keV) 6.285E+00 pCi/g

Laboratory: New World Technology

ORTEC g v - i (3263) Npp32 G53W3.10 21-JUL-2010 17:44:46
New World Technology Spectrum name: 3N000628.An1

Sample description
Parcel G 18-PG-C0281-63 359g
7/21/10 14:21

Acquisition information
Start time: 21-Jul-2010 16:08:18
Live time: 5400
Real time: 5405

- -

***** S U M M A R Y O F N U C L I D E S I N S A M P L E *****

Nuclide		Time of Count Activity pCi/g	Uncertainty Counting pCi/g	2 Sigma Total pCi/g	MDA pCi/g
Ac-228		1.1126E+00	2.0607E-01	2.1995E-01	0.110E+00
AM-241		7.0136E-02	8.5548E-02	8.5776E-02	0.687E-01
Bi-212		8.2920E-01	3.1943E-01	3.2438E-01	0.216E+00
BI-214		7.2396E-01	1.1153E-01	1.2149E-01	0.573E-01
CO-60	#A	-4.5045E-02	1.2237E+00	1.2237E+00	0.278E-01
CS-137		4.9096E-02	3.9397E-02	3.9535E-02	0.297E-01
EU-152	A	-3.4594E-02	2.2714E-02	2.2902E-02	0.919E-01
EU-154	C	1.2934E-01	8.4386E-02	8.5094E-02	0.585E-01
K-40		9.7304E+00	1.0161E+00	1.2210E+00	0.266E+00
Pa-234		1.1952E-01	1.2684E-01	1.2727E-01	0.885E-01
Pb-210	#	1.1866E+00	8.6240E-01	8.6738E-01	0.578E+00
Pb-212		1.0905E+00	1.0744E-01	1.3578E-01	0.627E-01
PB-214		8.3734E-01	1.3478E-01	1.4759E-01	0.653E-01
RA-226		1.8042E+00	9.5483E-01	9.6452E-01	0.754E+00
Th-230	#A	-5.9020E+00	1.7665E+01	1.7694E+01	0.552E+01
Th-234	#	2.1607E+00	1.5355E+00	1.5492E+00	0.106E+01
Tl-208		4.1740E-01	7.4792E-02	1.0611E-01	0.374E-01
U-235	C	6.0946E-02	9.5465E-02	9.5577E-02	0.544E-01

- All peaks for activity calculation had bad shape.
* - Activity omitted from total
& - Activity omitted from total and all peaks had bad shape.
< - MDA value printed.
A - Activity printed, but activity < MDA.
B - Activity < MDA and failed test.
C - Area < Critical level.
F - Failed fraction or key line test.
H - Halflife limit exceeded

---------- S U M M A R Y ----------

Total Activity (34.9 to 2779.2 keV) 1.994E+01 pCi/g

Laboratory: New World Technology

ORTEC g v - i (3263) Npp32 G53W3.10 21-JUL-2010 17:35:33
New World Technology Spectrum name: 6N000476.An1

Sample description
Parcel G 18-PG-C0281-64 386g
7/21/10 14:00

Acquisition information
Start time: 21-Jul-2010 16:03:21
Live time: 5400
Real time: 5410

- -

***** S U M M A R Y O F N U C L I D E S I N S A M P L E *****

Nuclide		Time of Count Activity pCi/g	Uncertainty 2 Sigma Counting pCi/g	Total pCi/g	MDA pCi/g
Ac-228		1.0305E+00	1.5501E-01	1.7058E-01	0.107E+00
AM-241	A	3.1105E-02	6.2605E-02	6.2666E-02	0.509E-01
Bi-212	A	-2.0601E-02	5.0190E-01	5.0190E-01	0.276E+00
BI-214		8.8374E-01	1.3329E-01	1.4567E-01	0.540E-01
CO-60	#	2.8281E-02	2.5770E-02	2.5841E-02	0.161E-01
CS-137	A	1.7704E-02	3.1074E-02	3.1097E-02	0.253E-01
EU-152	A	4.1172E-02	3.6037E-02	3.6206E-02	0.762E-01
EU-154	A	-3.7938E-03	3.7185E-03	3.7324E-03	0.468E-01
K-40		6.6760E+00	1.0306E+00	1.1305E+00	0.579E+00
Pa-234	C	6.1174E-02	5.2485E-02	5.2758E-02	0.568E-01
Pb-210	#	1.0056E+00	8.3121E-01	8.3489E-01	0.529E+00
Pb-212		1.2184E+00	9.3346E-02	1.3160E-01	0.477E-01
PB-214		9.2321E-01	1.2550E-01	1.4194E-01	0.541E-01
RA-226		1.0028E+00	7.5994E-01	7.6371E-01	0.609E+00
Th-230	A	2.0494E+00	4.7429E+00	4.7556E+00	0.385E+01
Th-234	#	2.3699E+00	1.2432E+00	1.2635E+00	0.807E+00
Tl-208	C	2.8950E-01	3.6894E-02	6.3928E-02	0.790E-01
U-235		9.3266E-02	7.5718E-02	7.6046E-02	0.395E-01

- All peaks for activity calculation had bad shape.
* - Activity omitted from total
& - Activity omitted from total and all peaks had bad shape.
< - MDA value printed.
A - Activity printed, but activity < MDA.
B - Activity < MDA and failed test.
C - Area < Critical level.
F - Failed fraction or key line test.
H - Halflife limit exceeded

---------- S U M M A R Y ----------

Total Activity (33.3 to 2659.2 keV) 1.523E+01 pCi/g

Laboratory: New World Technology

ORTEC g v - i (3263) Npp32 G53W3.10 21-JUL-2010 17:37:44
New World Technology Spectrum name: 7N000450.An1

Sample description
Parcel G 18-PG-C0281-65 381g
7/21/10 14:08

Acquisition information
Start time: 21-Jul-2010 16:05:40
Live time: 5400
Real time: 5408

- -

***** S U M M A R Y O F N U C L I D E S I N S A M P L E *****

Nuclide		Time of Count Activity pCi/g	Uncertainty 2 Sigma Counting pCi/g	Total pCi/g	MDA pCi/g
Ac-228		1.3088E+00	2.4892E-01	2.6484E-01	0.126E+00
AM-241	#A	-6.9255E-03	1.0451E+00	1.0451E+00	0.496E-01
Bi-212		8.9295E-01	3.8050E-01	3.8533E-01	0.263E+00
BI-214		9.7014E-01	1.6016E-01	1.7267E-01	0.721E-01
CO-60	#	5.1785E-02	3.6549E-02	3.6716E-02	0.215E-01
CS-137		3.6248E-02	4.3708E-02	4.3776E-02	0.343E-01
EU-152	#A	-8.8261E-03	9.7700E-03	9.7986E-03	0.795E-01
EU-154	C	8.8549E-02	5.9755E-02	6.0224E-02	0.401E-01
K-40		7.9739E+00	1.1554E+00	1.2816E+00	0.758E+00
Pa-234	A	9.0138E-02	7.8552E-02	7.8947E-02	0.932E-01
Pb-210		9.8032E-01	6.5076E-01	6.5532E-01	0.522E+00
Pb-212		1.1947E+00	1.1203E-01	1.4431E-01	0.645E-01
PB-214		1.0114E+00	1.2010E-01	1.4036E-01	0.624E-01
RA-226		1.3206E+00	9.2369E-01	9.2907E-01	0.734E+00
Th-230	#A	-7.4855E+00	4.2153E+01	4.2172E+01	0.568E+01
Th-234		1.2920E+00	1.0832E+00	1.0901E+00	0.920E+00
Tl-208		4.1512E-01	6.0748E-02	9.6408E-02	0.516E-01
U-235	C	8.4951E-02	1.0994E-01	1.1012E-01	0.511E-01

- All peaks for activity calculation had bad shape.
* - Activity omitted from total
& - Activity omitted from total and all peaks had bad shape.
< - MDA value printed.
A - Activity printed, but activity < MDA.
B - Activity < MDA and failed test.
C - Area < Critical level.
F - Failed fraction or key line test.
H - Halflife limit exceeded

---------- S U M M A R Y ----------

Total Activity (42.2 to 3353.9 keV) 1.741E+01 pCi/g

Laboratory: New World Technology

ORTEC g v - i (3263) Npp32 G53W3.10 21-JUL-2010 18:33:51
New World Technology Spectrum name: 1N000903.An1

Sample description
Parcel G 18-PG-C0281-66 388g
7/21/10 14:25

Acquisition information
Start time: 21-Jul-2010 17:25:53
Live time: 2700
Real time: 2701

- -

***** S U M M A R Y O F N U C L I D E S I N S A M P L E *****

Nuclide	Time of Count Activity pCi/g	Uncertainty 2 Sigma Counting pCi/g	Total pCi/g	MDA pCi/g
Ac-228	7.7092E-01	2.1011E-01	2.1676E-01	0.645E-01
AM-241 #A	4.3590E-02	6.6635E-02	6.6748E-02	0.482E-01
Bi-212 #A	1.8036E-01	1.9829E-01	1.9867E-01	0.260E+00
BI-214	6.1579E-01	1.5496E-01	1.6028E-01	0.565E-01
CO-60 #A	-3.7384E-02	2.8403E-01	2.8404E-01	0.275E-01
CS-137 #A	-7.1688E-03	8.5755E-01	8.5755E-01	0.252E-01
EU-152 A	5.9984E-03	4.6827E-03	4.7102E-03	0.870E-01
EU-154 A	3.0656E-02	8.1596E-02	8.1637E-02	0.378E-01
K-40	1.0973E+01	1.4435E+00	1.6330E+00	0.300E+00
Pa-234 #A	6.5265E-02	9.8421E-02	9.8586E-02	0.686E-01
Pb-210 A	5.4786E-01	8.0339E-01	8.0455E-01	0.564E+00
Pb-212	5.4353E-01	9.0405E-02	9.9427E-02	0.469E-01
Pb-214	5.3971E-01	1.1245E-01	1.1894E-01	0.423E-01
RA-226	6.8883E-01	8.3591E-01	8.3753E-01	0.667E+00
Th-230 #	5.2315E+00	6.1666E+00	6.2300E+00	0.442E+01
Th-234 A	4.3694E-01	1.0100E+00	1.0109E+00	0.950E+00
Tl-208 #	1.8624E-01	5.0268E-02	6.0455E-02	0.156E-01
U-235 A	2.7325E-02	3.7892E-02	3.7949E-02	0.462E-01

- All peaks for activity calculation had bad shape.
* - Activity omitted from total
& - Activity omitted from total and all peaks had bad shape.
< - MDA value printed.
A - Activity printed, but activity < MDA.
B - Activity < MDA and failed test.
C - Area < Critical level.
F - Failed fraction or key line test.
H - Halflife limit exceeded

---------- S U M M A R Y ----------

Total Activity (36.6 to 2885.2 keV) 1.363E+01 pCi/g

Laboratory: New World Technology

ORTEC g v - i (3263) Npp32 G53W3.10 21-JUL-2010 20:12:00
New World Technology Spectrum name: 2N000550.An1

Sample description
Parcel G 18-PG-C0281-67 380g
7/21/10 14:18

Acquisition information
Start time: 21-Jul-2010 18:35:00
Live time: 5400
Real time: 5409

- -

***** S U M M A R Y O F N U C L I D E S I N S A M P L E *****

Nuclide		Time of Count Activity pCi/g	Uncertainty Counting pCi/g	2 Sigma Total pCi/g	MDA pCi/g
Ac-228	C	4.6568E-01	1.3420E-01	1.3800E-01	0.214E+00
AM-241	A	3.9480E-02	2.3840E-01	2.3842E-01	0.201E+00
Bi-212		7.7375E-01	3.2312E-01	3.2739E-01	0.225E+00
BI-214		1.0785E+00	1.5461E-01	1.7044E-01	0.615E-01
CO-60	#A	1.2304E-02	4.4330E-02	4.4338E-02	0.301E-01
CS-137		6.5495E-02	3.9781E-02	4.0024E-02	0.292E-01
EU-152	A	-7.8063E-02	5.7082E-02	5.7464E-02	0.108E+00
EU-154	A	5.5628E-02	5.1959E-02	5.2172E-02	0.642E-01
K-40		9.9761E+00	1.1132E+00	1.3118E+00	0.711E+00
Pa-234		2.2302E-01	1.5319E-01	1.5443E-01	0.115E+00
Pb-210	#C	0.0000E+00	3.8229E+00	3.8229E+00	0.000E+00
Pb-212		1.2313E+00	1.1115E-01	1.4541E-01	0.642E-01
PB-214		9.9378E-01	1.1193E-01	1.3276E-01	0.559E-01
RA-226		8.8717E-01	9.0365E-01	9.0613E-01	0.731E+00
Th-230	#A	-1.2794E+01	1.4314E+01	1.4314E+01	0.454E+01
Th-234		2.2261E+00	1.4009E+00	1.4168E+00	0.113E+01
Tl-208		4.3124E-01	8.7616E-02	9.2154E-02	0.417E-01
U-235	#C	5.4829E-02	4.8555E-02	4.8731E-02	0.530E-01

- All peaks for activity calculation had bad shape.
* - Activity omitted from total
& - Activity omitted from total and all peaks had bad shape.
< - MDA value printed.
A - Activity printed, but activity < MDA.
B - Activity < MDA and failed test.
C - Area < Critical level.
F - Failed fraction or key line test.
H - Halflife limit exceeded

---------- S U M M A R Y ----------

Total Activity (32.4 to 2597.5 keV) 1.700E+01 pCi/g

Laboratory: New World Technology

ORTEC g v - i (3263) Npp32 G53W3.10 21-JUL-2010 20:12:26
New World Technology Spectrum name: 3N000629.An1

Sample description
Parcel G 18-PG-C0281-68 396g
7/21/10 14:12

Acquisition information
Start time: 21-Jul-2010 18:35:19
Live time: 5400
Real time: 5406

- -

***** S U M M A R Y O F N U C L I D E S I N S A M P L E *****

Nuclide		Time of Count Activity pCi/g	Uncertainty Counting pCi/g	2 Sigma Total pCi/g	MDA pCi/g
Ac-228		1.0972E+00	1.9551E-01	2.0970E-01	0.108E+00
AM-241		7.8605E-02	8.5467E-02	8.5753E-02	0.686E-01
Bi-212		6.5466E-01	3.0112E-01	3.0440E-01	0.214E+00
BI-214		8.9822E-01	1.1626E-01	1.3071E-01	0.574E-01
CO-60	#A	-4.0196E-03	4.6714E-02	4.6715E-02	0.297E-01
CS-137		5.5112E-02	3.8208E-02	3.8387E-02	0.285E-01
EU-152	#A	-1.5894E-01	2.9979E-01	3.0009E-01	0.794E-01
EU-154	C	6.1419E-02	5.0925E-02	5.1190E-02	0.489E-01
K-40		1.0347E+01	9.3342E-01	1.1788E+00	0.240E+00
Pa-234	C	1.1905E-01	1.1006E-01	1.1056E-01	0.818E-01
Pb-210		1.1277E+00	9.4968E-01	9.5377E-01	0.606E+00
Pb-212		1.1913E+00	1.0156E-01	1.3616E-01	0.576E-01
PB-214		8.3654E-01	1.0518E-01	1.2114E-01	0.595E-01
RA-226	A	2.3104E-01	8.3377E-01	8.3395E-01	0.692E+00
Th-230	#A	-7.5686E+00	3.1170E+01	3.1197E+01	0.540E+01
Th-234	A	4.7255E-01	1.0648E+00	1.0658E+00	0.954E+00
Tl-208		3.7955E-01	4.7168E-02	8.3125E-02	0.339E-01
U-235	C	5.2356E-02	6.4804E-02	6.4925E-02	0.462E-01

- All peaks for activity calculation had bad shape.
* - Activity omitted from total
& - Activity omitted from total and all peaks had bad shape.
< - MDA value printed.
A - Activity printed, but activity < MDA.
B - Activity < MDA and failed test.
C - Area < Critical level.
F - Failed fraction or key line test.
H - Halflife limit exceeded

---------- S U M M A R Y ----------

Total Activity (34.9 to 2779.2 keV) 1.659E+01 pCi/g

Laboratory: New World Technology

ORTEC g v - i (3263) Npp32 G53W3.10 26-JUL-2010 21:22:54
New World Technology Spectrum name: 4N000356.An1

Sample description
Parcel G 18-PG-C0281-69 362g
7/26/10 10:02

Acquisition information
Start time: 26-Jul-2010 20:37:43
Live time: 2700
Real time: 2703

- -

***** S U M M A R Y O F N U C L I D E S I N S A M P L E *****

Nuclide		Time of Count Activity pCi/g	Uncertainty 2 Sigma Counting pCi/g	Total pCi/g	MDA pCi/g
Ac-228		9.9206E-01	2.2203E-01	2.3238E-01	0.117E+00
AM-241	#A	3.0010E-01	8.0498E-01	8.0543E-01	0.596E+00
Bi-212		7.1458E-01	4.4218E-01	4.4485E-01	0.286E+00
BI-214		9.6455E-01	2.1524E-01	2.2460E-01	0.848E-01
CO-60	#A	8.0525E-03	8.7941E-03	8.8109E-03	0.320E-01
CS-137	A	1.0068E-02	5.0587E-02	5.0592E-02	0.421E-01
EU-152	A	-5.1316E-02	3.7730E-02	3.7980E-02	0.149E+00
EU-154	A	8.3544E-02	9.4541E-02	9.4806E-02	0.962E-01
K-40		7.0088E+00	1.1562E+00	1.2548E+00	0.111E+00
Pa-234	A	1.1449E-01	1.4675E-01	1.4710E-01	0.144E+00
Pb-210	#	0.0000E+00	0.0000E+00	0.0000E+00	0.000E+00
Pb-212		1.0415E+00	1.6080E-01	1.7929E-01	0.928E-01
Pb-214		9.2299E-01	2.0587E-01	2.1628E-01	0.941E-01
RA-226		1.0963E+00	1.3593E+00	1.3618E+00	0.109E+01
Th-230	#A	-3.8701E+00	5.3973E+01	5.3977E+01	0.311E+02
Th-234	#A	-2.9920E+00	8.1479E+00	8.1529E+00	0.207E+01
Tl-208		4.2396E-01	7.4079E-02	1.0646E-01	0.185E-01
U-235	A	3.1872E-02	5.6572E-02	5.6623E-02	0.733E-01

- All peaks for activity calculation had bad shape.
* - Activity omitted from total
& - Activity omitted from total and all peaks had bad shape.
< - MDA value printed.
A - Activity printed, but activity < MDA.
B - Activity < MDA and failed test.
C - Area < Critical level.
F - Failed fraction or key line test.
H - Halflife limit exceeded

---------- S U M M A R Y ----------

Total Activity (50.9 to 3247.4 keV) 1.207E+01 pCi/g

Laboratory: New World Technology

ORTEC g v - i (3263) Npp32 G53W3.10 27-JUL-2010 10:35:54
New World Technology Spectrum name: 6N000485.An1

Sample description
Parcel G 18-PG-C0281-70 356g
7/26/10 10:08

Acquisition information
Start time: 27-Jul-2010 09:22:29
Live time: 2700
Real time: 2705

- -

***** S U M M A R Y O F N U C L I D E S I N S A M P L E *****

Nuclide	Time of Count Activity pCi/g	Uncertainty 2 Sigma Counting pCi/g	Total pCi/g	MDA pCi/g
Ac-228	7.4612E-01	1.5872E-01	1.6689E-01	0.135E+00
AM-241 #A	2.2469E-03	5.1451E-02	5.1451E-02	0.477E-01
Bi-212 A	2.6607E-02	4.5435E-01	4.5436E-01	0.380E+00
BI-214	7.8040E-01	1.7321E-01	1.8082E-01	0.597E-01
CO-60 #A	-9.9752E-03	4.0751E-02	4.0751E-02	0.141E-01
CS-137 A	2.0950E-02	4.1933E-02	4.1957E-02	0.339E-01
EU-152 #A	2.2246E-03	1.5497E-03	1.5612E-03	0.918E-01
EU-154 A	3.4216E-02	2.8828E-02	2.8973E-02	0.656E-01
K-40	8.3761E+00	1.3644E+00	1.4837E+00	0.808E+00
Pa-234 C	2.2216E-01	1.3812E-01	1.3949E-01	0.947E-01
Pb-210	8.9253E-01	9.0213E-01	9.0480E-01	0.721E+00
Pb-212	6.5583E-01	1.0839E-01	1.1934E-01	0.644E-01
PB-214	5.7219E-01	1.5570E-01	1.6103E-01	0.713E-01
RA-226 A	3.5628E-01	1.0595E+00	1.0598E+00	0.872E+00
Th-230 #A	9.7197E-01	5.3776E+00	5.3801E+00	0.450E+01
Th-234 A	5.1327E-01	1.2377E+00	1.2387E+00	0.109E+01
Tl-208	2.8485E-01	6.8762E-02	8.5831E-02	0.629E-01
U-235	9.6239E-02	7.9108E-02	7.9442E-02	0.550E-01

- All peaks for activity calculation had bad shape.
* - Activity omitted from total
& - Activity omitted from total and all peaks had bad shape.
< - MDA value printed.
A - Activity printed, but activity < MDA.
B - Activity < MDA and failed test.
C - Area < Critical level.
F - Failed fraction or key line test.
H - Halflife limit exceeded

---------- S U M M A R Y ----------

Total Activity (33.3 to 2659.2 keV) 1.151E+01 pCi/g

Laboratory: New World Technology

ORTEC g v - i (3263) Npp32 G53W3.10 27-JUL-2010 10:36:37
New World Technology Spectrum name: 7N000457.An1

Sample description
Parcel G 18-PG-C0281-71 382g
7/26/10 10:10

Acquisition information
Start time: 27-Jul-2010 09:24:47
Live time: 2700
Real time: 2703

- -

***** S U M M A R Y O F N U C L I D E S I N S A M P L E *****

Nuclide		Time of Count Activity pCi/g	Uncertainty Counting pCi/g	2 Sigma Total pCi/g	MDA pCi/g
Ac-228		1.3823E+00	3.2976E-01	3.4332E-01	0.137E+00
AM-241	#A	4.4668E-02	1.0907E-01	1.0914E-01	0.825E-01
Bi-212		8.8260E-01	4.5590E-01	4.5985E-01	0.351E+00
BI-214		8.6251E-01	2.3056E-01	2.3759E-01	0.103E+00
CO-60	#A	2.5937E-02	5.2722E-02	5.2752E-02	0.333E-01
CS-137	A	3.2463E-02	4.7076E-02	4.7127E-02	0.361E-01
EU-152	A	-6.7655E-02	1.0600E-01	1.0616E-01	0.115E+00
EU-154	C	1.0222E-01	8.0363E-02	8.0828E-02	0.802E-01
K-40		6.1858E+00	1.4822E+00	1.5434E+00	0.106E+01
Pa-234		2.2273E-01	1.6459E-01	1.6574E-01	0.126E+00
Pb-210		1.0657E+00	8.9279E-01	8.9672E-01	0.712E+00
Pb-212		1.0230E+00	1.4491E-01	1.6451E-01	0.831E-01
PB-214		8.1395E-01	1.9683E-01	2.0533E-01	0.978E-01
RA-226	A	2.8200E-01	1.2867E+00	1.2869E+00	0.106E+01
Th-230	#A	-7.4684E+00	6.1181E+01	6.1194E+01	0.836E+01
Th-234	#A	7.5989E-01	1.5704E+00	1.5720E+00	0.122E+01
Tl-208		3.7953E-01	8.6473E-02	1.1028E-01	0.791E-01
U-235		1.0378E-01	1.0774E-01	1.0802E-01	0.659E-01

- All peaks for activity calculation had bad shape.
* - Activity omitted from total
& - Activity omitted from total and all peaks had bad shape.
< - MDA value printed.
A - Activity printed, but activity < MDA.
B - Activity < MDA and failed test.
C - Area < Critical level.
F - Failed fraction or key line test.
H - Halflife limit exceeded

---------- S U M M A R Y ----------

Total Activity (42.2 to 3353.9 keV) 1.282E+01 pCi/g

Laboratory: New World Technology

ORTEC g v - i (3263) Npp32 G53W3.10 27-JUL-2010 12:32:10
New World Technology Spectrum name: 7N000459.An1

Sample description
Parcel G 18-PG-C0281-72 364g
7/26/10 10:15

Acquisition information
Start time: 27-Jul-2010 11:39:56
Live time: 2700
Real time: 2703

- -

***** S U M M A R Y O F N U C L I D E S I N S A M P L E *****

Nuclide		Time of Count Activity pCi/g	Uncertainty Counting pCi/g	2 Sigma Total pCi/g	MDA pCi/g
Ac-228		8.9845E-01	2.7759E-01	2.8444E-01	0.180E+00
AM-241	A	3.2929E-02	1.1195E-01	1.1199E-01	0.912E-01
Bi-212		4.4567E-01	4.3843E-01	4.3948E-01	0.337E+00
BI-214		5.9880E-01	2.0082E-01	2.0473E-01	0.964E-01
CO-60	#A	2.8838E-04	3.5049E-04	3.5103E-04	0.189E-01
CS-137	A	2.4647E-02	5.3812E-02	5.3837E-02	0.428E-01
EU-152	#A	-6.1213E-02	6.0279E-02	6.0502E-02	0.124E+00
EU-154	C	9.5802E-02	1.0317E-01	1.0348E-01	0.737E-01
K-40		3.3515E+00	1.2894E+00	1.3103E+00	0.110E+01
Pa-234	C	2.1162E-01	1.8079E-01	1.8174E-01	0.115E+00
Pb-210	#A	-3.2200E-01	4.9359E+00	4.9359E+00	0.103E+01
Pb-212		8.5621E-01	1.3777E-01	1.5242E-01	0.810E-01
PB-214		6.8998E-01	2.3995E-01	2.4502E-01	0.114E+00
RA-226	A	7.9648E-01	1.1862E+00	1.1877E+00	0.957E+00
Th-230	#A	-1.2308E+00	1.2940E+01	1.2942E+01	0.809E+01
Th-234	#A	7.3028E-02	1.5387E+00	1.5388E+00	0.121E+01
Tl-208		3.2895E-01	1.1578E-01	1.3009E-01	0.763E-01
U-235	C	1.1199E-01	1.0011E-01	1.0047E-01	0.643E-01

- All peaks for activity calculation had bad shape.
* - Activity omitted from total
& - Activity omitted from total and all peaks had bad shape.
< - MDA value printed.
A - Activity printed, but activity < MDA.
B - Activity < MDA and failed test.
C - Area < Critical level.
F - Failed fraction or key line test.
H - Halflife limit exceeded

---------- S U M M A R Y ----------

Total Activity (42.2 to 3353.9 keV) 7.170E+00 pCi/g

Laboratory: New World Technology

ORTEC g v - i (3263) Npp32 G53W3.10 27-JUL-2010 15:27:43
New World Technology Spectrum name: 6N000487.An1

Sample description
Parcel G 18-PG-C0281-73 383g
7/26/10 10:35

Acquisition information
Start time: 27-Jul-2010 13:56:07
Live time: 5400
Real time: 5410

- -

***** S U M M A R Y O F N U C L I D E S I N S A M P L E *****

Nuclide		Time of Count Activity pCi/g	Uncertainty 2 Sigma Counting pCi/g	Total pCi/g	MDA pCi/g
Ac-228		1.0446E+00	1.9492E-01	2.0786E-01	0.107E+00
AM-241	#A	5.3895E-02	1.0562E-01	1.0573E-01	0.683E-01
Bi-212		8.1216E-01	2.8154E-01	2.8692E-01	0.186E+00
BI-214		7.9852E-01	1.0577E-01	1.1836E-01	0.531E-01
CO-60	#	3.4512E-02	2.8577E-02	2.8672E-02	0.169E-01
CS-137	A	1.2528E-02	3.0030E-02	3.0042E-02	0.248E-01
EU-152	A	-6.4219E-02	9.7477E-02	9.7629E-02	0.738E-01
EU-154	A	-2.3778E-02	4.1471E-02	4.1520E-02	0.515E-01
K-40		5.8242E+00	8.8120E-01	9.6990E-01	0.557E+00
Pa-234	C	1.4189E-01	1.1048E-01	1.1117E-01	0.696E-01
Pb-210	#	8.6495E-01	7.9691E-01	7.9975E-01	0.524E+00
Pb-212		1.0313E+00	8.9132E-02	1.1879E-01	0.498E-01
PB-214		8.2203E-01	1.2346E-01	1.3685E-01	0.542E-01
RA-226		1.0886E+00	7.3781E-01	7.4238E-01	0.588E+00
Th-230	#A	3.9665E+00	8.4285E+00	8.4553E+00	0.544E+01
Th-234		1.3074E+00	8.8174E-01	8.9047E-01	0.751E+00
Tl-208		4.0592E-01	4.9346E-02	8.8282E-02	0.413E-01
U-235	A	3.1781E-02	4.7597E-02	4.7658E-02	0.421E-01

- All peaks for activity calculation had bad shape.
* - Activity omitted from total
& - Activity omitted from total and all peaks had bad shape.
< - MDA value printed.
A - Activity printed, but activity < MDA.
B - Activity < MDA and failed test.
C - Area < Critical level.
F - Failed fraction or key line test.
H - Halflife limit exceeded

---------- S U M M A R Y ----------

Total Activity (33.3 to 2659.2 keV) 1.403E+01 pCi/g

Laboratory: New World Technology

ORTEC g v - i (3263) Npp32 G53W3.10 27-JUL-2010 13:25:10
New World Technology Spectrum name: 7N000460.An1

Sample description
Parcel G 18-PG-C0281-74 358g
7/26/10 10:23

Acquisition information
Start time: 27-Jul-2010 12:38:04
Live time: 2700
Real time: 2703

- -

***** S U M M A R Y O F N U C L I D E S I N S A M P L E *****

Nuclide		Time of Count Activity pCi/g	Uncertainty Counting pCi/g	2 Sigma Total pCi/g	MDA pCi/g
Ac-228		1.2501E+00	3.1354E-01	3.2522E-01	0.128E+00
AM-241	A	8.1012E-02	1.1593E-01	1.1616E-01	0.926E-01
Bi-212		5.8299E-01	4.8565E-01	4.8727E-01	0.350E+00
BI-214		8.7709E-01	1.9527E-01	2.0380E-01	0.751E-01
CO-60	A	2.4832E-02	2.2069E-02	2.2132E-02	0.455E-01
CS-137	A	3.1903E-02	5.5634E-02	5.5675E-02	0.435E-01
EU-152	#A	-8.0331E-02	9.1298E-02	9.1551E-02	0.141E+00
EU-154	#A	2.3226E-02	3.0172E-02	3.0236E-02	0.661E-01
K-40		5.4433E+00	1.4270E+00	1.4764E+00	0.110E+01
Pa-234	C	1.3326E-01	1.1015E-01	1.1077E-01	0.130E+00
Pb-210	#	1.0117E+00	1.0423E+00	1.0453E+00	0.736E+00
Pb-212		1.1468E+00	1.6003E-01	1.8230E-01	0.909E-01
PB-214		8.8546E-01	1.8968E-01	2.0007E-01	0.891E-01
RA-226	A	4.5847E-01	1.3422E+00	1.3426E+00	0.110E+01
Th-230	#A	-9.7430E+00	1.0796E+02	1.0797E+02	0.630E+01
Th-234	A	7.5060E-01	1.4676E+00	1.4694E+00	0.128E+01
Tl-208	C	2.4831E-01	6.4418E-02	7.8453E-02	0.122E+00
U-235		1.2194E-01	1.2519E-01	1.2553E-01	0.698E-01

- All peaks for activity calculation had bad shape.
* - Activity omitted from total
& - Activity omitted from total and all peaks had bad shape.
< - MDA value printed.
A - Activity printed, but activity < MDA.
B - Activity < MDA and failed test.
C - Area < Critical level.
F - Failed fraction or key line test.
H - Halflife limit exceeded

---------- S U M M A R Y ----------

Total Activity (42.2 to 3353.9 keV) 1.019E+01 pCi/g

Laboratory: New World Technology

ORTEC g v - i (3263) Npp32 G53W3.10 27-JUL-2010 13:53:30
New World Technology Spectrum name: 4N000357.An1

Sample description
Parcel G 18-PG-C0281-75 354g
7/26/10 10:20

Acquisition information
Start time: 27-Jul-2010 13:07:53
Live time: 2700
Real time: 2703

- -

***** S U M M A R Y O F N U C L I D E S I N S A M P L E *****

Nuclide		Time of Count Activity pCi/g	Uncertainty Counting pCi/g	2 Sigma Total pCi/g	MDA pCi/g
Ac-228		1.2866E+00	2.4280E-01	2.5857E-01	0.124E+00
AM-241	#A	4.4065E-01	7.6713E-01	7.6813E-01	0.571E+00
Bi-212		6.4086E-01	4.3771E-01	4.3988E-01	0.313E+00
BI-214		9.2145E-01	2.0104E-01	2.1018E-01	0.779E-01
CO-60	#A	-3.2784E-02	2.8516E-01	2.8517E-01	0.319E-01
CS-137	A	3.1693E-03	4.5523E-02	4.5524E-02	0.389E-01
EU-152	A	1.6006E-02	1.3069E-02	1.3139E-02	0.156E+00
EU-154	C	1.7105E-01	1.0295E-01	1.0396E-01	0.941E-01
K-40		1.0247E+01	1.5839E+00	1.7369E+00	0.588E+00
Pa-234	#C	1.9377E-01	1.1891E-01	1.2011E-01	0.140E+00
Pb-210	#	0.0000E+00	0.0000E+00	0.0000E+00	0.000E+00
Pb-212		9.8718E-01	1.5299E-01	1.7045E-01	0.886E-01
Pb-214		8.7645E-01	2.2458E-01	2.3324E-01	0.112E+00
RA-226	A	2.6417E-01	1.2730E+00	1.2732E+00	0.105E+01
Th-230	#A	-1.2332E+01	8.7900E+01	8.7925E+01	0.279E+02
Th-234	#A	-2.0704E+00	4.8450E+00	4.8490E+00	0.213E+01
Tl-208		3.9528E-01	7.0514E-02	1.0027E-01	0.190E-01
U-235	A	2.3962E-02	3.1135E-02	3.1188E-02	0.784E-01

- All peaks for activity calculation had bad shape.
* - Activity omitted from total
& - Activity omitted from total and all peaks had bad shape.
< - MDA value printed.
A - Activity printed, but activity < MDA.
B - Activity < MDA and failed test.
C - Area < Critical level.
F - Failed fraction or key line test.
H - Halflife limit exceeded

---------- S U M M A R Y ----------

Total Activity (50.9 to 3247.4 keV) 1.535E+01 pCi/g

Laboratory: New World Technology

ORTEC g v - i (3263) Npp32 G53W3.10 27-JUL-2010 13:56:06
New World Technology Spectrum name: 5N000410.An1

Sample description
Parcel G 18-PG-C0281-76 385g
7/26/10 10:05

Acquisition information
Start time: 27-Jul-2010 13:08:52
Live time: 2700
Real time: 2702

- -

***** S U M M A R Y O F N U C L I D E S I N S A M P L E *****

Nuclide		Time of Count Activity pCi/g	Uncertainty 2 Sigma Counting pCi/g	Total pCi/g	MDA pCi/g
Ac-228		1.0032E+00	2.7476E-01	2.8337E-01	0.145E+00
AM-241	A	4.0960E-02	1.0401E-01	1.0407E-01	0.843E-01
Bi-212		6.1190E-01	3.6510E-01	3.6747E-01	0.245E+00
BI-214		8.1215E-01	1.6710E-01	1.7561E-01	0.699E-01
CO-60	#	3.7701E-02	4.9046E-02	4.9112E-02	0.300E-01
CS-137	A	3.2238E-02	4.5432E-02	4.5483E-02	0.348E-01
EU-152	#C	1.1538E-01	7.3878E-02	7.4523E-02	0.840E-01
EU-154	C	1.0354E-01	7.3053E-02	7.3578E-02	0.690E-01
K-40		8.8774E+00	1.3979E+00	1.5283E+00	0.827E+00
Pa-234	C	1.0740E-01	9.7983E-02	9.8434E-02	0.787E-01
Pb-210	#A	3.5816E-01	7.3770E-01	7.3823E-01	0.609E+00
Pb-212		1.1125E+00	1.3124E-01	1.5620E-01	0.675E-01
Pb-214		8.0637E-01	1.5468E-01	1.6517E-01	0.724E-01
RA-226	A	7.2665E-01	1.1290E+00	1.1303E+00	0.902E+00
Th-230	A	9.4359E-01	6.5849E+00	6.5868E+00	0.539E+01
Th-234	#A	-3.5844E-01	1.5404E+00	1.5408E+00	0.111E+01
Tl-208		4.4091E-01	7.8343E-02	1.1162E-01	0.162E-01
U-235		7.4635E-02	6.6224E-02	6.6465E-02	0.533E-01

- All peaks for activity calculation had bad shape.
* - Activity omitted from total
& - Activity omitted from total and all peaks had bad shape.
< - MDA value printed.
A - Activity printed, but activity < MDA.
B - Activity < MDA and failed test.
C - Area < Critical level.
F - Failed fraction or key line test.
H - Halflife limit exceeded

---------- S U M M A R Y ----------

Total Activity (37.9 to 3020.7 keV) 1.374E+01 pCi/g

Laboratory: New World Technology

ORTEC g v - i (3263) Npp32 G53W3.10 27-JUL-2010 14:42:17
New World Technology Spectrum name: 1N000921.An1

Sample description
Parcel G 18-PG-C0281-77 384g
7/26/10 10:12

Acquisition information
Start time: 27-Jul-2010 13:54:42
Live time: 2700
Real time: 2701

- -

***** S U M M A R Y O F N U C L I D E S I N S A M P L E *****

Nuclide	Time of Count Activity pCi/g	Uncertainty 2 Sigma Counting pCi/g	Total pCi/g	MDA pCi/g
Ac-228	1.0192E+00	2.3225E-01	2.4270E-01	0.833E-01
AM-241 #A	2.6968E-02	7.7038E-02	7.7075E-02	0.559E-01
Bi-212	6.6792E-01	3.9323E-01	3.9585E-01	0.262E+00
BI-214	5.8787E-01	1.6149E-01	1.6616E-01	0.654E-01
CO-60 #A	1.4094E-02	4.9361E-02	4.9370E-02	0.353E-01
CS-137 #A	-7.7262E-03	2.8037E-02	2.8037E-02	0.110E-01
EU-152 A	-7.4995E-02	9.4028E-02	9.4243E-02	0.797E-01
EU-154 A	2.8029E-02	4.3045E-02	4.3111E-02	0.365E-01
K-40	5.7418E+00	1.2634E+00	1.3250E+00	0.671E+00
Pa-234 #C	7.9587E-02	7.2797E-02	7.3130E-02	0.438E-01
Pb-210	8.6415E-01	8.0084E-01	8.0373E-01	0.551E+00
Pb-212	6.9748E-01	1.0270E-01	1.1562E-01	0.539E-01
Pb-214	4.7440E-01	1.0901E-01	1.1421E-01	0.580E-01
RA-226 A	1.2016E-01	9.6772E-01	9.6776E-01	0.804E+00
Th-230 A	2.1455E+00	6.4144E+00	6.4246E+00	0.520E+01
Th-234 #	1.0904E+00	1.2017E+00	1.2061E+00	0.964E+00
Tl-208	2.7512E-01	5.6146E-02	7.4927E-02	0.158E-01
U-235	6.7528E-02	5.8373E-02	5.8596E-02	0.482E-01

- All peaks for activity calculation had bad shape.
* - Activity omitted from total
& - Activity omitted from total and all peaks had bad shape.
< - MDA value printed.
A - Activity printed, but activity < MDA.
B - Activity < MDA and failed test.
C - Area < Critical level.
F - Failed fraction or key line test.
H - Halflife limit exceeded

---------- S U M M A R Y ----------

Total Activity (36.6 to 2885.2 keV) 1.040E+01 pCi/g

Laboratory: New World Technology

ORTEC g v - i (3263) Npp32 G53W3.10 27-JUL-2010 17:27:06
New World Technology Spectrum name: 1N000923.An1

Sample description
Parcel G 18-PG-C0281-77DUP 384g
7/26/10 10:12

Acquisition information
Start time: 27-Jul-2010 16:32:33
Live time: 2700
Real time: 2701

- -

***** S U M M A R Y O F N U C L I D E S I N S A M P L E *****

Nuclide		Time of Count Activity pCi/g	Uncertainty 2 Sigma Counting pCi/g	Total pCi/g	MDA pCi/g
Ac-228		8.4641E-01	2.8097E-01	2.8699E-01	0.117E+00
AM-241	#A	2.6473E-02	5.0460E-02	5.0515E-02	0.409E-01
Bi-212		6.4812E-01	3.2013E-01	3.2316E-01	0.186E+00
BI-214		5.8605E-01	1.4030E-01	1.4562E-01	0.552E-01
CO-60	#A	-3.4766E-02	8.0751E-01	8.0751E-01	0.280E-01
CS-137	A	9.1598E-03	3.8005E-02	3.8010E-02	0.311E-01
EU-152	A	-1.7318E-01	2.6689E-01	2.6729E-01	0.764E-01
EU-154	C	8.3759E-02	4.9727E-02	5.0231E-02	0.374E-01
K-40		4.9880E+00	1.0420E+00	1.0982E+00	0.434E+00
Pa-234	A	5.9698E-02	9.2259E-02	9.2407E-02	0.739E-01
Pb-210	#	8.3903E-01	7.8483E-01	7.8761E-01	0.548E+00
Pb-212		6.2692E-01	1.0128E-01	1.1197E-01	0.572E-01
Pb-214		5.0182E-01	1.1467E-01	1.2020E-01	0.600E-01
RA-226	A	1.1106E-02	8.8894E-01	8.8894E-01	0.745E+00
Th-230	#A	-3.3406E-01	1.1918E+01	1.1918E+01	0.266E+01
Th-234	A	9.1595E-01	1.1126E+00	1.1160E+00	0.101E+01
Tl-208		2.8384E-01	5.6210E-02	7.6024E-02	0.158E-01
U-235	C	1.0487E-01	7.1967E-02	7.2402E-02	0.468E-01

- All peaks for activity calculation had bad shape.
* - Activity omitted from total
& - Activity omitted from total and all peaks had bad shape.
< - MDA value printed.
A - Activity printed, but activity < MDA.
B - Activity < MDA and failed test.
C - Area < Critical level.
F - Failed fraction or key line test.
H - Halflife limit exceeded

---------- S U M M A R Y ----------

Total Activity (36.6 to 2885.2 keV) 9.320E+00 pCi/g

Laboratory: New World Technology

ORTEC g v - i (3263) Npp32 G53W3.10 27-JUL-2010 16:16:12
New World Technology Spectrum name: 2N000557.An1

Sample description
Parcel G 18-PG-C0281-78 370g
7/26/10 10:40

Acquisition information
Start time: 27-Jul-2010 14:31:48
Live time: 5400
Real time: 5409

- -

***** S U M M A R Y O F N U C L I D E S I N S A M P L E *****

Nuclide		Time of Count Activity pCi/g	Uncertainty Counting pCi/g	2 Sigma Total pCi/g	MDA pCi/g
Ac-228	A	1.6312E-01	5.1301E-02	5.2525E-02	0.200E+00
AM-241	#A	-2.7806E-02	4.1328E-01	4.1329E-01	0.246E+00
Bi-212		3.5517E-01	3.1344E-01	3.1437E-01	0.242E+00
BI-214		7.6687E-01	1.2533E-01	1.3531E-01	0.526E-01
CO-60	#A	-1.6789E-02	4.8390E-02	4.8403E-02	0.239E-01
CS-137		7.7750E-02	3.9267E-02	3.9613E-02	0.278E-01
EU-152	#A	-9.2096E-02	5.0846E-02	5.1442E-02	0.110E+00
EU-154	C	1.2443E-01	8.0823E-02	8.1507E-02	0.626E-01
K-40		1.2939E+01	1.1748E+00	1.4801E+00	0.709E+00
Pa-234	C	1.5550E-01	1.1526E-01	1.1606E-01	0.114E+00
Pb-210	#C	0.0000E+00	2.7936E+00	2.7936E+00	0.000E+00
Pb-212		7.5575E-01	9.3328E-02	1.0964E-01	0.595E-01
PB-214		7.5402E-01	1.3561E-01	1.4603E-01	0.615E-01
RA-226		9.8366E-01	8.5740E-01	8.6062E-01	0.690E+00
Th-230	A	9.6186E+00	1.5138E+01	1.5225E+01	0.126E+02
Th-234		2.0833E+00	1.8274E+00	1.8381E+00	0.117E+01
Tl-208		2.9538E-01	5.9307E-02	6.2451E-02	0.317E-01
U-235	A	5.5378E-03	6.9130E-02	6.9131E-02	0.510E-01

- All peaks for activity calculation had bad shape.
* - Activity omitted from total
& - Activity omitted from total and all peaks had bad shape.
< - MDA value printed.
A - Activity printed, but activity < MDA.
B - Activity < MDA and failed test.
C - Area < Critical level.
F - Failed fraction or key line test.
H - Halflife limit exceeded

---------- S U M M A R Y ----------

Total Activity (32.4 to 2597.5 keV) 1.901E+01 pCi/g

Laboratory: New World Technology

ORTEC g v - i (3263) Npp32 G53W3.10 27-JUL-2010 16:48:59
New World Technology Spectrum name: 7N000461.An1

Sample description
Parcel G 18-PG-C0281-79 385g
7/26/10 10:33

Acquisition information
Start time: 27-Jul-2010 15:09:07
Live time: 5400
Real time: 5407

- -

***** S U M M A R Y O F N U C L I D E S I N S A M P L E *****

Nuclide		Time of Count Activity pCi/g	Uncertainty 2 Sigma Counting pCi/g	Total pCi/g	MDA pCi/g
Ac-228		8.8097E-01	2.1412E-01	2.2261E-01	0.111E+00
AM-241	#A	4.7844E-02	8.6149E-02	8.6255E-02	0.627E-01
Bi-212		6.6737E-01	4.2092E-01	4.2337E-01	0.264E+00
BI-214		8.5404E-01	1.1640E-01	1.2953E-01	0.497E-01
CO-60	#	2.8474E-02	2.1742E-02	2.1827E-02	0.255E-01
CS-137		3.4794E-02	3.4137E-02	3.4217E-02	0.260E-01
EU-152	A	-3.7429E-02	4.8516E-02	4.8620E-02	0.914E-01
EU-154	C	7.8237E-02	5.7573E-02	5.7954E-02	0.566E-01
K-40		9.1016E+00	1.1809E+00	1.3399E+00	0.747E+00
Pa-234	#A	4.4693E-02	7.6596E-02	7.6696E-02	0.808E-01
Pb-210		6.2507E-01	7.3645E-01	7.3810E-01	0.527E+00
Pb-212		8.2142E-01	1.0177E-01	1.1945E-01	0.610E-01
PB-214		6.1454E-01	1.2998E-01	1.3727E-01	0.716E-01
RA-226		1.0958E+00	8.7682E-01	8.8072E-01	0.701E+00
Th-230	#A	-7.9065E+00	4.6265E+01	4.6285E+01	0.506E+01
Th-234	#A	4.3636E-01	1.1382E+00	1.1390E+00	0.873E+00
Tl-208		3.0929E-01	5.4583E-02	7.8041E-02	0.510E-01
U-235	C	5.0956E-02	7.9530E-02	7.9623E-02	0.501E-01

- All peaks for activity calculation had bad shape.
* - Activity omitted from total
& - Activity omitted from total and all peaks had bad shape.
< - MDA value printed.
A - Activity printed, but activity < MDA.
B - Activity < MDA and failed test.
C - Area < Critical level.
F - Failed fraction or key line test.
H - Halflife limit exceeded

---------- S U M M A R Y ----------

Total Activity (42.2 to 3353.9 keV) 1.438E+01 pCi/g

Laboratory: New World Technology

ORTEC g v - i (3263) Npp32 G53W3.10 27-JUL-2010 15:01:41
New World Technology Spectrum name: 4N000358.An1

Sample description
Parcel G 18-PG-C0281-80 374g
7/26/10 10:29

Acquisition information
Start time: 27-Jul-2010 14:06:23
Live time: 2700
Real time: 2703

- -

***** S U M M A R Y O F N U C L I D E S I N S A M P L E *****

Nuclide		Time of Count Activity pCi/g	Uncertainty Counting pCi/g	2 Sigma Total pCi/g	MDA pCi/g
Ac-228		8.8813E-01	2.8144E-01	2.8806E-01	0.125E+00
AM-241	#A	2.0606E-01	6.1817E-01	6.1845E-01	0.500E+00
Bi-212		4.1477E-01	3.8806E-01	3.8909E-01	0.284E+00
BI-214		7.2308E-01	1.6994E-01	1.7662E-01	0.667E-01
CO-60	#A	2.7633E-02	1.7255E-02	1.7356E-02	0.315E-01
CS-137	A	3.3145E-02	5.2960E-02	5.3007E-02	0.415E-01
EU-152	A	-6.4671E-02	5.7844E-02	5.8103E-02	0.151E+00
EU-154	A	7.3324E-02	1.2722E-01	1.2737E-01	0.812E-01
K-40		1.1334E+01	1.4899E+00	1.6857E+00	0.198E+00
Pa-234	C	1.8863E-01	1.5487E-01	1.5575E-01	0.174E+00
Pb-210	#	0.0000E+00	0.0000E+00	0.0000E+00	0.000E+00
Pb-212		7.0593E-01	1.4331E-01	1.5305E-01	0.874E-01
Pb-214		7.5562E-01	1.7907E-01	1.8712E-01	0.929E-01
RA-226	A	7.0342E-01	1.2354E+00	1.2366E+00	0.100E+01
Th-230	#A	-1.5581E+01	1.0044E+02	1.0047E+02	0.228E+02
Th-234	#A	-2.5959E+00	6.0863E+00	6.0913E+00	0.191E+01
Tl-208		4.6928E-01	1.2017E-01	1.4698E-01	0.179E-01
U-235	A	3.5304E-02	5.0227E-02	5.0298E-02	0.689E-01

- All peaks for activity calculation had bad shape.
* - Activity omitted from total
& - Activity omitted from total and all peaks had bad shape.
< - MDA value printed.
A - Activity printed, but activity < MDA.
B - Activity < MDA and failed test.
C - Area < Critical level.
F - Failed fraction or key line test.
H - Halflife limit exceeded

---------- S U M M A R Y ----------

Total Activity (50.9 to 3247.4 keV) 1.529E+01 pCi/g

Laboratory: New World Technology

ORTEC g v - i (3263) Npp32 G53W3.10 27-JUL-2010 16:46:27
New World Technology Spectrum name: 5N000411.An1

Sample description
Parcel G 18-PG-C0281-81 383g
7/26/10 10:52

Acquisition information
Start time: 27-Jul-2010 15:10:57
Live time: 5400
Real time: 5404

- -

***** S U M M A R Y O F N U C L I D E S I N S A M P L E *****

Nuclide		Time of Count Activity pCi/g	Uncertainty Counting pCi/g	2 Sigma Total pCi/g	MDA pCi/g
Ac-228		1.3230E+00	1.9976E-01	2.1969E-01	0.101E+00
AM-241	A	9.7113E-03	5.9708E-02	5.9714E-02	0.491E-01
Bi-212		9.3117E-01	3.3335E-01	3.3932E-01	0.207E+00
BI-214		1.0830E+00	1.3303E-01	1.5128E-01	0.522E-01
CO-60	#	2.8517E-02	3.1367E-02	3.1426E-02	0.199E-01
CS-137	A	2.1494E-02	3.3509E-02	3.3540E-02	0.266E-01
EU-152	C	8.7390E-02	7.7087E-02	7.7442E-02	0.708E-01
EU-154	C	1.0559E-01	8.0439E-02	8.0935E-02	0.452E-01
K-40		6.7688E+00	9.3693E-01	1.0486E+00	0.603E+00
Pa-234	#A	5.6677E-02	6.4733E-02	6.4923E-02	0.800E-01
Pb-210		8.0739E-01	7.0955E-01	7.1237E-01	0.509E+00
Pb-212		1.4089E+00	1.0390E-01	1.4934E-01	0.520E-01
Pb-214		1.0151E+00	1.2829E-01	1.4757E-01	0.577E-01
RA-226		1.0180E+00	7.9565E-01	7.9936E-01	0.628E+00
Th-230	#A	4.6938E-01	5.4436E+00	5.4442E+00	0.437E+01
Th-234	#A	-4.4569E-01	1.2570E+00	1.2577E+00	0.846E+00
Tl-208		6.2692E-01	9.1936E-02	1.4572E-01	0.813E-02
U-235	C	7.1475E-02	6.0263E-02	6.0505E-02	0.417E-01

- All peaks for activity calculation had bad shape.
* - Activity omitted from total
& - Activity omitted from total and all peaks had bad shape.
< - MDA value printed.
A - Activity printed, but activity < MDA.
B - Activity < MDA and failed test.
C - Area < Critical level.
F - Failed fraction or key line test.
H - Halflife limit exceeded

---------- S U M M A R Y ----------

Total Activity (37.9 to 3020.7 keV) 1.498E+01 pCi/g

Laboratory: New World Technology

ORTEC g v - i (3263) Npp32 G53W3.10 27-JUL-2010 15:33:50
New World Technology Spectrum name: 1N000922.An1

Sample description
Parcel G 18-PG-C0281-82 373g
7/26/10 10:56

Acquisition information
Start time: 27-Jul-2010 14:48:42
Live time: 2700
Real time: 2701

- -

***** S U M M A R Y O F N U C L I D E S I N S A M P L E *****

Nuclide	Time of Count Activity pCi/g	Uncertainty 2 Sigma Counting pCi/g	Total pCi/g	MDA pCi/g
Ac-228	5.7255E-01	2.1485E-01	2.1846E-01	0.956E-01
AM-241 #A	5.0439E-02	8.2050E-02	8.2173E-02	0.554E-01
Bi-212	4.7027E-01	3.0086E-01	3.0256E-01	0.179E+00
BI-214	3.7512E-01	1.2790E-01	1.3031E-01	0.543E-01
CO-60 #A	2.5344E-02	3.0955E-02	3.1002E-02	0.277E-01
CS-137 A	2.8550E-02	3.8005E-02	3.8054E-02	0.286E-01
EU-152 #A	-1.0881E-01	1.8885E-01	1.8908E-01	0.841E-01
EU-154 A	2.9518E-02	4.7406E-02	4.7472E-02	0.345E-01
K-40	5.8326E+00	1.1754E+00	1.2435E+00	0.328E+00
Pa-234 #	2.0623E-01	1.0423E-01	1.0579E-01	0.664E-01
Pb-210 A	4.2232E-01	6.0824E-01	6.0914E-01	0.507E+00
Pb-212	4.0246E-01	8.4783E-02	9.0151E-02	0.494E-01
Pb-214	3.4924E-01	1.1189E-01	1.1467E-01	0.569E-01
RA-226 A	2.6951E-01	8.8375E-01	8.8398E-01	0.729E+00
Th-230 A	1.4524E+00	6.0840E+00	6.0890E+00	0.496E+01
Th-234 #	1.4698E+00	1.2553E+00	1.2630E+00	0.972E+00
Tl-208 #C	1.3112E-01	3.6861E-02	4.3794E-02	0.294E-01
U-235	4.7070E-02	5.2951E-02	5.3070E-02	0.463E-01

- All peaks for activity calculation had bad shape.
* - Activity omitted from total
& - Activity omitted from total and all peaks had bad shape.
< - MDA value printed.
A - Activity printed, but activity < MDA.
B - Activity < MDA and failed test.
C - Area < Critical level.
F - Failed fraction or key line test.
H - Halflife limit exceeded

---------- S U M M A R Y ----------

Total Activity (36.6 to 2885.2 keV) 9.678E+00 pCi/g

Laboratory: New World Technology

ORTEC g v - i (3263) Npp32 G53W3.10 27-JUL-2010 18:07:35
New World Technology Spectrum name: 6N000488.An1

Sample description
Parcel G 18-PG-C0281-83 373g
7/26/10 11:05

Acquisition information
Start time: 27-Jul-2010 16:28:02
Live time: 5400
Real time: 5410

- -

***** S U M M A R Y O F N U C L I D E S I N S A M P L E *****

Nuclide		Time of Count Activity pCi/g	Uncertainty 2 Sigma Counting pCi/g	Total pCi/g	MDA pCi/g
Ac-228		1.0519E+00	1.7523E-01	1.8971E-01	0.120E+00
AM-241	#A	-8.6788E-03	5.3962E-01	5.3962E-01	0.328E-01
Bi-212		7.5876E-01	3.2686E-01	3.3092E-01	0.233E+00
BI-214		7.9804E-01	1.4412E-01	1.5359E-01	0.595E-01
CO-60	#	2.9620E-02	3.4743E-02	3.4800E-02	0.210E-01
CS-137	#A	-1.3764E-02	1.9650E+00	1.9650E+00	0.234E-01
EU-152	A	1.3707E-03	1.1959E-03	1.2016E-03	0.762E-01
EU-154	A	-4.5932E-03	5.0240E-03	5.0391E-03	0.479E-01
K-40		6.4873E+00	1.0618E+00	1.1537E+00	0.753E+00
Pa-234	A	7.3263E-02	6.6342E-02	6.6651E-02	0.752E-01
Pb-210		6.9650E-01	7.0135E-01	7.0344E-01	0.486E+00
Pb-212		1.1112E+00	9.1607E-02	1.2470E-01	0.502E-01
PB-214		7.1290E-01	1.1931E-01	1.2983E-01	0.583E-01
RA-226		9.6227E-01	7.4706E-01	7.5059E-01	0.598E+00
Th-230	A	3.9986E+00	6.1652E+00	6.2023E+00	0.499E+01
Th-234		1.1211E+00	9.0691E-01	9.1316E-01	0.776E+00
Tl-208		3.1377E-01	7.4778E-02	9.3774E-02	0.424E-01
U-235	C	6.6926E-02	6.4063E-02	6.4263E-02	0.429E-01

- All peaks for activity calculation had bad shape.
* - Activity omitted from total
& - Activity omitted from total and all peaks had bad shape.
< - MDA value printed.
A - Activity printed, but activity < MDA.
B - Activity < MDA and failed test.
C - Area < Critical level.
F - Failed fraction or key line test.
H - Halflife limit exceeded

---------- S U M M A R Y ----------

Total Activity (33.3 to 2659.2 keV) 1.332E+01 pCi/g

Laboratory: New World Technology

ORTEC g v - i (3263) Npp32 G53W3.10 27-JUL-2010 21:09:00
New World Technology Spectrum name: 2N000558.An1

Sample description
Parcel G 18-PG-C0281-84 374g
7/26/10 11:20

Acquisition information
Start time: 27-Jul-2010 19:33:44
Live time: 5400
Real time: 5409

- -

***** S U M M A R Y O F N U C L I D E S I N S A M P L E *****

Nuclide		Time of Count Activity pCi/g	Uncertainty 2 Sigma Counting pCi/g	Total pCi/g	MDA pCi/g
Ac-228		7.7083E-01	1.6400E-01	1.7244E-01	0.151E+00
AM-241	#A	-1.5803E-01	2.4667E-01	2.4667E-01	0.709E-01
Bi-212	C	5.0172E-01	2.8072E-01	2.8280E-01	0.287E+00
BI-214		1.0899E+00	1.4517E-01	1.6226E-01	0.599E-01
CO-60	#A	1.3715E-02	2.4102E-02	2.4120E-02	0.301E-01
CS-137		8.1185E-02	4.0394E-02	4.0761E-02	0.287E-01
EU-152	#A	9.3660E-02	6.4221E-02	6.4710E-02	0.114E+00
EU-154	C	1.1895E-01	8.9281E-02	8.9847E-02	0.663E-01
K-40		2.8977E+00	1.2765E+00	1.2924E+00	0.110E+01
Pa-234	C	2.0651E-01	1.7247E-01	1.7341E-01	0.107E+00
Pb-210	#C	0.0000E+00	3.8380E+00	3.8380E+00	0.000E+00
Pb-212		1.1466E+00	1.0976E-01	1.4024E-01	0.662E-01
PB-214		9.7946E-01	1.1587E-01	1.3556E-01	0.608E-01
RA-226		1.2569E+00	8.8103E-01	8.8614E-01	0.702E+00
Th-230	#A	-1.3000E+01	1.8035E+01	1.8035E+01	0.461E+01
Th-234		1.4864E+00	1.3858E+00	1.3930E+00	0.114E+01
Tl-208		4.0941E-01	5.8313E-02	6.4310E-02	0.331E-01
U-235	A	5.1543E-02	6.7937E-02	6.8049E-02	0.519E-01

- All peaks for activity calculation had bad shape.
* - Activity omitted from total
& - Activity omitted from total and all peaks had bad shape.
< - MDA value printed.
A - Activity printed, but activity < MDA.
B - Activity < MDA and failed test.
C - Area < Critical level.
F - Failed fraction or key line test.
H - Halflife limit exceeded

---------- S U M M A R Y ----------

Total Activity (32.4 to 2597.5 keV) 1.012E+01 pCi/g

Laboratory: New World Technology

ORTEC g v - i (3263) Npp32 G53W3.10 27-JUL-2010 19:04:19
New World Technology Spectrum name: 3N000638.An1

Sample description
Parcel G 18-PG-C0281-85 384g
7/26/10 11:25

Acquisition information
Start time: 27-Jul-2010 17:22:29
Live time: 5400
Real time: 5405

- -

***** S U M M A R Y O F N U C L I D E S I N S A M P L E *****

Nuclide		Time of Count Activity pCi/g	Uncertainty 2 Sigma Counting pCi/g	Total pCi/g	MDA pCi/g
Ac-228		1.1101E+00	2.2263E-01	2.3547E-01	0.996E-01
AM-241	A	2.5576E-02	7.8177E-02	7.8210E-02	0.638E-01
Bi-212		6.2325E-01	3.3479E-01	3.3747E-01	0.247E+00
BI-214		8.9871E-01	1.3727E-01	1.4972E-01	0.558E-01
CO-60	#	3.3455E-02	4.6690E-02	4.6745E-02	0.295E-01
CS-137		5.1358E-02	3.8975E-02	3.9128E-02	0.294E-01
EU-152	A	-1.0867E-01	8.1497E-02	8.2017E-02	0.948E-01
EU-154	C	7.1079E-02	4.6113E-02	4.6504E-02	0.559E-01
K-40		1.0507E+01	9.9741E-01	1.2366E+00	0.243E+00
Pa-234	C	1.8280E-01	1.5613E-01	1.5695E-01	0.836E-01
Pb-210	A	5.6249E-01	9.0619E-01	9.0726E-01	0.605E+00
Pb-212		1.0949E+00	1.0449E-01	1.3367E-01	0.597E-01
PB-214		7.8021E-01	1.0830E-01	1.2195E-01	0.613E-01
RA-226		1.1905E+00	8.8840E-01	8.9294E-01	0.714E+00
Th-230	#A	-8.6077E+00	4.3416E+01	4.3440E+01	0.569E+01
Th-234	A	3.5260E-01	1.4580E+00	1.4584E+00	0.103E+01
Tl-208		4.5745E-01	6.1862E-02	1.0311E-01	0.389E-01
U-235		5.0801E-02	5.8214E-02	5.8340E-02	0.491E-01

- All peaks for activity calculation had bad shape.
* - Activity omitted from total
& - Activity omitted from total and all peaks had bad shape.
< - MDA value printed.
A - Activity printed, but activity < MDA.
B - Activity < MDA and failed test.
C - Area < Critical level.
F - Failed fraction or key line test.
H - Halflife limit exceeded

---------- S U M M A R Y ----------

Total Activity (34.9 to 2779.2 keV) 1.671E+01 pCi/g

Laboratory: New World Technology

ORTEC g v - i (3263) Npp32 G53W3.10 27-JUL-2010 19:02:09
New World Technology Spectrum name: 7N000463.An1

Sample description
Parcel G 18-PG-C0281-86 387g
7/26/10 11:30

Acquisition information
Start time: 27-Jul-2010 17:50:45
Live time: 2700
Real time: 2703

- -

***** S U M M A R Y O F N U C L I D E S I N S A M P L E *****

Nuclide		Time of Count Activity pCi/g	Uncertainty Counting pCi/g	2 Sigma Total pCi/g	MDA pCi/g
Ac-228		5.7818E-01	1.7368E-01	1.7822E-01	0.150E+00
AM-241	A	5.2057E-03	9.6778E-02	9.6779E-02	0.798E-01
Bi-212	A	2.8545E-01	3.9004E-01	3.9052E-01	0.298E+00
BI-214		4.1978E-01	1.4559E-01	1.4824E-01	0.786E-01
CO-60	#	4.4141E-02	3.9766E-02	3.9878E-02	0.230E-01
CS-137	A	2.3096E-02	4.7749E-02	4.7775E-02	0.378E-01
EU-152	A	8.2227E-02	4.2483E-02	4.3052E-02	0.108E+00
EU-154	C	9.6189E-02	1.3094E-01	1.3119E-01	0.584E-01
K-40		6.2032E+00	1.4035E+00	1.4684E+00	0.102E+01
Pa-234	C	1.9490E-01	1.2500E-01	1.2616E-01	0.109E+00
Pb-210	A	5.8019E-01	9.0234E-01	9.0350E-01	0.660E+00
Pb-212		5.1969E-01	1.1366E-01	1.2035E-01	0.708E-01
PB-214		5.1532E-01	1.8100E-01	1.8475E-01	0.889E-01
RA-226	#A	-3.1513E-01	1.0824E+00	1.0824E+00	0.223E+00
Th-230	#A	-8.4341E+00	6.3427E+01	6.3443E+01	0.578E+01
Th-234	#A	-7.8854E-01	2.8947E+00	2.8956E+00	0.120E+01
Tl-208		2.1892E-01	7.8550E-02	8.7913E-02	0.718E-01
U-235		8.1232E-02	9.8312E-02	9.8503E-02	0.551E-01

- All peaks for activity calculation had bad shape.
* - Activity omitted from total
& - Activity omitted from total and all peaks had bad shape.
< - MDA value printed.
A - Activity printed, but activity < MDA.
B - Activity < MDA and failed test.
C - Area < Critical level.
F - Failed fraction or key line test.
H - Halflife limit exceeded

---------- S U M M A R Y ----------

Total Activity (42.2 to 3353.9 keV) 8.499E+00 pCi/g

Laboratory: New World Technology

EXCAVATED SOIL UNIT 284

C09-284

(NON-IR , WORK AREA 16 SOIL)

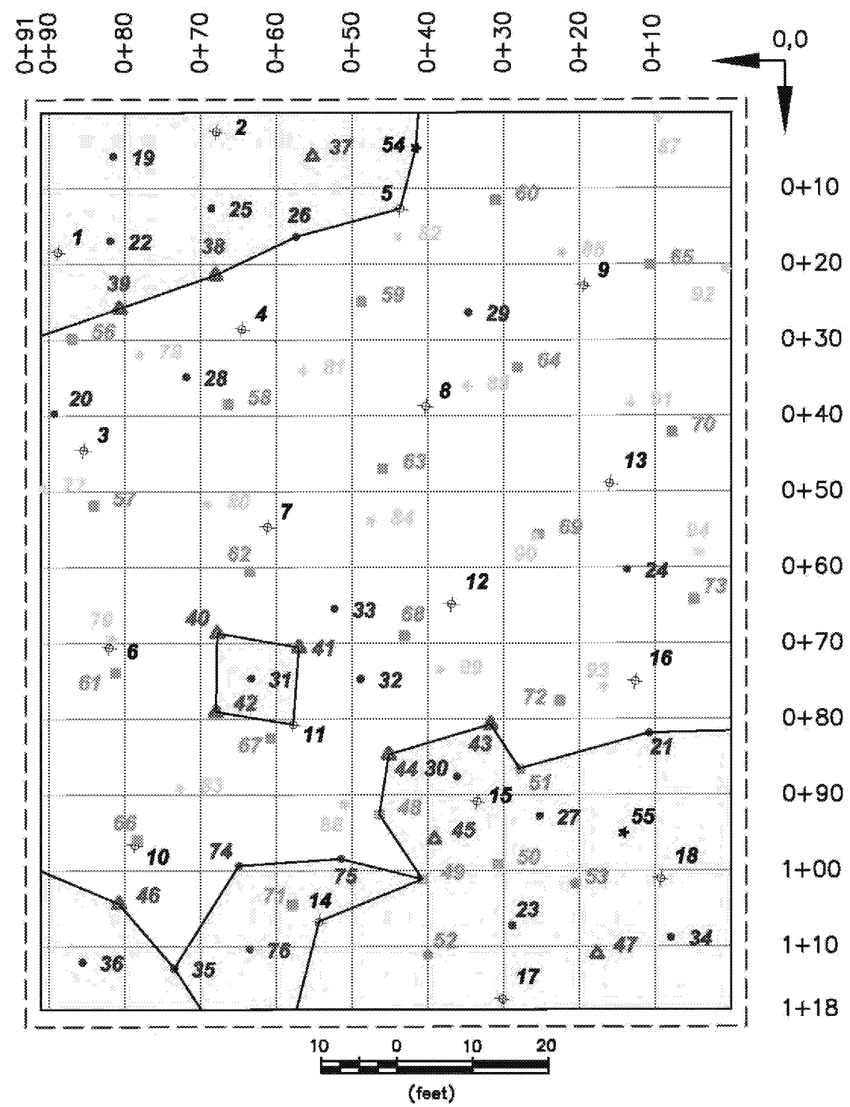

SYSTEMATIC 1 SAMPLES 1–18
BIASED SAMPLES 19–36
CHARACTERIZATION 1 SAMPLES 37–47
CHARACTERIZATION 2 SAMPLES 48–50
CHARACTERIZATION 3 SAMPLES 51–53
CHARACTERIZATION 4 SAMPLES 54–55
SYSTEMATIC 2 SAMPLES 56–73
CHARACTERIZATION 5 SAMPLES 74–76
SYSTEMATIC 3 SAMPLES 77–94

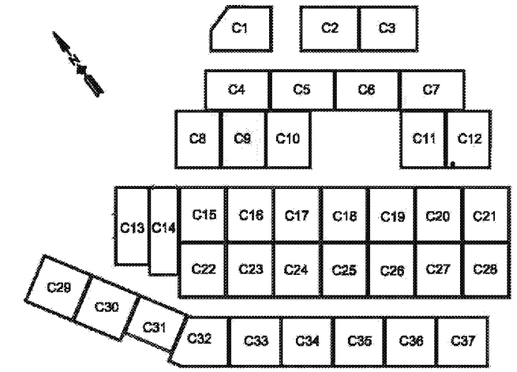

KEY PLAN

LEGEND:

1	SYSTEMATIC 1
19	BIASED
37	CHARACTERIZATION 1
48	CHARACTERIZATION 2
51	CHARACTERIZATION 3
54	CHARACTERIZATION 4
56	SYSTEMATIC 2
19	CHARACTERIZATION 5
77	SYSTEMATIC 3
	REMEDIATION AREA

RECORD DRAWING

RADIOLOGICAL SCREENING YARD 2 (RSY2)
SOIL SAMPLING LOCATIONS AREA C09

HUNTERS POINT SHIPYARD-SAN FRANCISCO, CA

TETRA TECH EC, INC.

DRAWING NO: 18-PE-C09-284.DWG
DCN:
TASK: CTO 18
APPROVED BY: BMH
CHECKED BY: TYL
REV:
DRAWN BY: AEC
DATE: 08-05-10

\\Ecisfofile1\projects\CTO-RSY 2 Pad Surveys CAD Files\DWG Files\Active Pads\18-PE-C09-284.dwg 8/5/10

ORTEC g v - i (3263) Npp32 G53W3.10 29-JUN-2010 18:51:23
New World Technology Spectrum name: 1N000824.An1

Sample description
Parcel G 18-PG-C0284-01 373g
6/29/10 11:00

Acquisition information
Start time: 29-Jun-2010 17:07:54
Live time: 5400
Real time: 5403

- -

***** S U M M A R Y O F N U C L I D E S I N S A M P L E *****

Nuclide		Time of Count Activity pCi/g	Uncertainty 2 Sigma Counting pCi/g	Total pCi/g	MDA pCi/g
Ac-228		1.6915E+00	2.3013E-01	2.5811E-01	0.108E+00
AM-241	#A	-2.6227E-04	5.4668E-02	5.4668E-02	0.419E-01
Bi-212		1.1478E+00	3.5791E-01	3.6634E-01	0.226E+00
BI-214		1.2793E+00	1.6182E-01	1.8283E-01	0.581E-01
CO-60	#C	1.7676E-02	2.0543E-02	2.0578E-02	0.110E-01
CS-137		3.6903E-02	3.2210E-02	3.2306E-02	0.243E-01
EU-152	A	-1.8178E-01	6.4031E-01	6.4050E-01	0.731E-01
EU-154	A	1.8523E-02	2.8439E-02	2.8482E-02	0.450E-01
K-40		6.2980E+00	8.9775E-01	9.9897E-01	0.435E+00
Pa-234	#A	6.6250E-02	9.5792E-02	9.5967E-02	0.673E-01
Pb-210		1.1236E+00	7.6428E-01	7.6938E-01	0.505E+00
Pb-212		1.5848E+00	1.0758E-01	1.6166E-01	0.500E-01
Pb-214		1.1190E+00	1.4546E-01	1.6620E-01	0.638E-01
RA-226		1.7966E+00	8.0882E-01	8.2014E-01	0.624E+00
Th-230	#A	6.6759E-01	4.7443E+00	4.7457E+00	0.390E+01
Th-234		1.4087E+00	9.6935E-01	9.7858E-01	0.846E+00
Tl-208		5.7122E-01	5.9798E-02	1.1911E-01	0.359E-01
U-235		8.7643E-02	6.1659E-02	6.2014E-02	0.445E-01

- All peaks for activity calculation had bad shape.
* - Activity omitted from total
& - Activity omitted from total and all peaks had bad shape.
< - MDA value printed.
A - Activity printed, but activity < MDA.
B - Activity < MDA and failed test.
C - Area < Critical level.
F - Failed fraction or key line test.
H - Halflife limit exceeded

---------- S U M M A R Y ----------

Total Activity (36.6 to 2885.2 keV) 1.815E+01 pCi/g

Laboratory: New World Technology

ORTEC g v - i (3263) Npp32 G53W3.10 29-JUN-2010 18:58:32
New World Technology Spectrum name: 2N000505.An1

Sample description
Parcel G 18-PG-C0284-02 397g
6/29/10 11:03

Acquisition information
Start time: 29-Jun-2010 17:09:42
Live time: 5400
Real time: 5410

- -

***** S U M M A R Y O F N U C L I D E S I N S A M P L E *****

Nuclide		Time of Count Activity pCi/g	Uncertainty Counting pCi/g	2 Sigma Total pCi/g	MDA pCi/g
Ac-228		2.3200E+00	1.8541E-01	2.4512E-01	0.101E+00
AM-241	#A	-1.4888E-01	2.7282E-01	2.7282E-01	0.668E-01
Bi-212		1.8959E+00	3.7170E-01	3.9348E-01	0.207E+00
BI-214		1.8734E+00	2.0322E-01	2.3838E-01	0.734E-01
CO-60	#A	-3.0217E-02	1.7324E-01	1.7325E-01	0.280E-01
CS-137		8.9572E-02	4.4407E-02	4.4813E-02	0.322E-01
EU-152	A	-1.7529E-01	2.3225E-01	2.3273E-01	0.103E+00
EU-154	C	1.1273E-01	6.1649E-02	6.2385E-02	0.682E-01
K-40		8.7049E+00	1.0446E+00	1.2075E+00	0.685E+00
Pa-234	C	1.6320E-01	1.0508E-01	1.0604E-01	0.104E+00
Pb-210	#C	0.0000E+00	4.1474E+00	4.1474E+00	0.000E+00
Pb-212		2.4346E+00	1.3690E-01	2.3044E-01	0.673E-01
PB-214		1.7187E+00	1.8340E-01	2.2108E-01	0.777E-01
RA-226		1.5278E+00	1.0658E+00	1.0720E+00	0.853E+00
Th-230	#A	1.7009E-01	2.1916E+01	2.1916E+01	0.159E+02
Th-234		2.9899E+00	1.5390E+00	1.5651E+00	0.123E+01
Tl-208		7.3733E-01	7.2088E-02	8.7074E-02	0.360E-01
U-235		1.0376E-01	1.0501E-01	1.0530E-01	0.574E-01

- All peaks for activity calculation had bad shape.
* - Activity omitted from total
& - Activity omitted from total and all peaks had bad shape.
< - MDA value printed.
A - Activity printed, but activity < MDA.
B - Activity < MDA and failed test.
C - Area < Critical level.
F - Failed fraction or key line test.
H - Halflife limit exceeded

---------- S U M M A R Y ----------

Total Activity (32.4 to 2597.5 keV) 2.429E+01 pCi/g

Laboratory: New World Technology

ORTEC g v - i (3263) Npp32 G53W3.10 29-JUN-2010 18:58:55
New World Technology Spectrum name: 3N000582.An1

Sample description
Parcel G 18-PG-C0284-03 340g
6/29/10 11:08

Acquisition information
Start time: 29-Jun-2010 17:08:49
Live time: 5400
Real time: 5405

- -

***** S U M M A R Y O F N U C L I D E S I N S A M P L E *****

Nuclide		Time of Count Activity pCi/g	Uncertainty 2 Sigma Counting pCi/g	Total pCi/g	MDA pCi/g
Ac-228		1.2590E+00	2.4783E-01	2.6266E-01	0.109E+00
AM-241	A	5.9682E-02	9.3624E-02	9.3774E-02	0.757E-01
Bi-212		5.0537E-01	3.0496E-01	3.0690E-01	0.225E+00
BI-214		8.6439E-01	1.3527E-01	1.4698E-01	0.560E-01
CO-60	#A	-1.5246E-02	6.7041E-02	6.7049E-02	0.310E-01
CS-137		5.2824E-02	4.2501E-02	4.2650E-02	0.321E-01
EU-152	A	-1.3503E-01	1.1459E-01	1.1516E-01	0.895E-01
EU-154	C	9.1552E-02	7.7791E-02	7.8176E-02	0.560E-01
K-40		8.8743E+00	1.0387E+00	1.2084E+00	0.303E+00
Pa-234		2.4219E-01	1.3518E-01	1.3684E-01	0.115E+00
Pb-210	A	2.9237E-01	7.4840E-01	7.4875E-01	0.637E+00
Pb-212		1.1326E+00	1.1169E-01	1.4111E-01	0.644E-01
PB-214		7.5350E-01	1.1404E-01	1.2623E-01	0.670E-01
RA-226		1.2089E+00	1.0056E+00	1.0098E+00	0.811E+00
Th-230	#A	-5.0937E+00	1.7582E+01	1.7603E+01	0.695E+01
Th-234		1.2221E+00	1.2152E+00	1.2208E+00	0.108E+01
Tl-208		3.0602E-01	5.3650E-02	7.6967E-02	0.784E-01
U-235	C	8.2445E-02	7.8979E-02	7.9224E-02	0.555E-01

- All peaks for activity calculation had bad shape.
* - Activity omitted from total
& - Activity omitted from total and all peaks had bad shape.
< - MDA value printed.
A - Activity printed, but activity < MDA.
B - Activity < MDA and failed test.
C - Area < Critical level.
F - Failed fraction or key line test.
H - Halflife limit exceeded

---------- S U M M A R Y ----------

Total Activity (34.9 to 2779.2 keV) 1.642E+01 pCi/g

Laboratory: New World Technology

ORTEC g v - i (3263) Npp32 G53W3.10 29-JUN-2010 17:14:32
New World Technology Spectrum name: 4N000319.An1

Sample description
Parcel G 18-PG-C0284-04 383g
6/29/10 11:09

Acquisition information
Start time: 29-Jun-2010 16:27:45
Live time: 2700
Real time: 2703

- -

***** S U M M A R Y O F N U C L I D E S I N S A M P L E *****

Nuclide		Time of Count Activity pCi/g	Uncertainty 2 Sigma Counting pCi/g	Total pCi/g	MDA pCi/g
Ac-228		8.4452E-01	2.7935E-01	2.8538E-01	0.269E+00
AM-241	A	3.5160E-01	8.8873E-01	8.8928E-01	0.719E+00
Bi-212		8.0045E-01	5.0151E-01	5.0447E-01	0.339E+00
BI-214		8.3988E-01	1.9975E-01	2.0742E-01	0.830E-01
CO-60	#A	-9.5602E-04	8.2999E-04	8.3250E-04	0.298E-01
CS-137	A	3.9034E-02	6.1750E-02	6.1805E-02	0.485E-01
EU-152	A	-1.1119E-02	1.3378E-02	1.3411E-02	0.169E+00
EU-154	#C	1.2833E-01	1.2036E-01	1.2085E-01	0.654E-01
K-40		1.1472E+01	1.4511E+00	1.6560E+00	0.107E+00
Pa-234		2.6608E-01	2.2403E-01	2.2524E-01	0.174E+00
Pb-210	#	0.0000E+00	0.0000E+00	0.0000E+00	0.000E+00
Pb-212		1.3690E+00	1.7113E-01	2.0037E-01	0.940E-01
Pb-214		9.3275E-01	2.2134E-01	2.3126E-01	0.106E+00
RA-226	#A	-3.6364E-01	1.3535E+00	1.3535E+00	0.258E+00
Th-230	#A	-6.2170E-01	4.9505E+01	4.9505E+01	0.344E+02
Th-234	#A	-1.9856E+00	5.2076E+00	5.2110E+00	0.224E+01
Tl-208	#C	3.6653E-01	7.4043E-02	9.9255E-02	0.506E-01
U-235	A	4.2227E-02	8.6872E-02	8.6930E-02	0.707E-01

- All peaks for activity calculation had bad shape.
* - Activity omitted from total
& - Activity omitted from total and all peaks had bad shape.
< - MDA value printed.
A - Activity printed, but activity < MDA.
B - Activity < MDA and failed test.
C - Area < Critical level.
F - Failed fraction or key line test.
H - Halflife limit exceeded

---------- S U M M A R Y ----------

Total Activity (50.9 to 3245.1 keV) 1.626E+01 pCi/g

Laboratory: New World Technology

ORTEC g v - i (3263) Npp32 G53W3.10 29-JUN-2010 19:01:45
New World Technology Spectrum name: 5N000369.An1

Sample description
Parcel G 18-PG-C0284-05 357g
6/29/10 11:12

Acquisition information
Start time: 29-Jun-2010 17:19:27
Live time: 5400
Real time: 5404

- -

***** S U M M A R Y O F N U C L I D E S I N S A M P L E *****

Nuclide		Time of Count Activity pCi/g	Uncertainty 2 Sigma Counting pCi/g	Total pCi/g	MDA pCi/g
Ac-228		6.8264E-01	1.7572E-01	1.8194E-01	0.112E+00
AM-241	#A	1.2154E-02	5.4666E-02	5.4676E-02	0.438E-01
Bi-212		5.2176E-01	2.7103E-01	2.7335E-01	0.232E+00
BI-214		5.2740E-01	1.1795E-01	1.2306E-01	0.565E-01
CO-60	#	6.4610E-02	4.6433E-02	4.6638E-02	0.234E-01
CS-137		3.0866E-02	3.3871E-02	3.3934E-02	0.261E-01
EU-152	A	2.3763E-02	3.2302E-02	3.2364E-02	0.631E-01
EU-154	C	5.9446E-02	5.0471E-02	5.0722E-02	0.467E-01
K-40		8.8977E+00	1.0900E+00	1.2535E+00	0.655E+00
Pa-234	C	6.3751E-02	7.0392E-02	7.0613E-02	0.605E-01
Pb-210		1.3141E+00	6.6397E-01	6.7194E-01	0.536E+00
Pb-212		6.1178E-01	8.3553E-02	9.5661E-02	0.522E-01
Pb-214		6.9514E-01	1.2246E-01	1.3225E-01	0.592E-01
RA-226		1.2610E+00	7.2194E-01	7.2821E-01	0.553E+00
Th-230	A	1.7119E+00	5.7575E+00	5.7648E+00	0.470E+01
Th-234	#A	-3.6891E-01	1.0800E+00	1.0806E+00	0.799E+00
Tl-208		3.0315E-01	6.7367E-02	8.6759E-02	0.872E-02
U-235	C	6.0672E-02	8.0329E-02	8.0460E-02	0.394E-01

- All peaks for activity calculation had bad shape.
* - Activity omitted from total
& - Activity omitted from total and all peaks had bad shape.
< - MDA value printed.
A - Activity printed, but activity < MDA.
B - Activity < MDA and failed test.
C - Area < Critical level.
F - Failed fraction or key line test.
H - Halflife limit exceeded

---------- S U M M A R Y ----------

Total Activity (37.9 to 3020.7 keV) 1.488E+01 pCi/g

Laboratory: New World Technology

ORTEC g v - i (3263) Npp32 G53W3.10 29-JUN-2010 17:16:07
New World Technology Spectrum name: 6N000434.An1

Sample description
Parcel G 18-PG-C0284-06 333g
6/29/10 11:15

Acquisition information
Start time: 29-Jun-2010 16:28:17
Live time: 2700
Real time: 2704

- -

***** S U M M A R Y O F N U C L I D E S I N S A M P L E *****

Nuclide		Time of Count Activity pCi/g	Uncertainty 2 Sigma Counting pCi/g	Total pCi/g	MDA pCi/g
Ac-228		1.5974E+00	3.1829E-01	3.3689E-01	0.121E+00
AM-241	#A	5.3991E-02	1.2846E-01	1.2855E-01	0.918E-01
Bi-212		7.0391E-01	4.6485E-01	4.6731E-01	0.331E+00
BI-214		9.0951E-01	1.9898E-01	2.0798E-01	0.759E-01
CO-60	#A	-6.7145E-03	6.9515E-02	6.9516E-02	0.200E-01
CS-137	A	1.9862E-02	5.1702E-02	5.1719E-02	0.422E-01
EU-152	A	-8.0328E-02	7.4745E-02	7.5054E-02	0.120E+00
EU-154	C	2.0499E-01	1.0417E-01	1.0561E-01	0.810E-01
K-40	#	9.3348E+00	1.4875E+00	1.6231E+00	0.400E+00
Pa-234	C	2.2711E-01	1.4613E-01	1.4747E-01	0.118E+00
Pb-210		8.6880E-01	8.7365E-01	8.7627E-01	0.698E+00
Pb-212		9.3453E-01	1.3649E-01	1.5392E-01	0.816E-01
PB-214		8.4365E-01	1.6405E-01	1.7489E-01	0.896E-01
RA-226	A	8.6646E-01	1.1443E+00	1.1461E+00	0.923E+00
Th-230	#A	1.2354E-01	7.5103E+00	7.5104E+00	0.591E+01
Th-234		1.5431E+00	1.4065E+00	1.4142E+00	0.120E+01
Tl-208	C	3.0954E-01	7.6649E-02	9.4822E-02	0.100E+00
U-235	A	4.4290E-02	5.0340E-02	5.0451E-02	0.682E-01

- All peaks for activity calculation had bad shape.
* - Activity omitted from total
& - Activity omitted from total and all peaks had bad shape.
< - MDA value printed.
A - Activity printed, but activity < MDA.
B - Activity < MDA and failed test.
C - Area < Critical level.
F - Failed fraction or key line test.
H - Halflife limit exceeded

---------- S U M M A R Y ----------

Total Activity (33.3 to 2659.2 keV) 1.587E+01 pCi/g

Laboratory: New World Technology

ORTEC g v - i (3263) Npp32 G53W3.10 29-JUN-2010 17:20:10
New World Technology Spectrum name: 7N000413.An1

Sample description
Parcel G 18-PG-C0284-07 332g
6/29/10 11:18

Acquisition information
Start time: 29-Jun-2010 16:29:46
Live time: 2700
Real time: 2705

- -

***** S U M M A R Y O F N U C L I D E S I N S A M P L E *****

Nuclide		Time of Count Activity pCi/g	Uncertainty 2 Sigma Counting pCi/g	Total pCi/g	MDA pCi/g
Ac-228		1.1810E+00	3.4622E-01	3.5571E-01	0.169E+00
AM-241	#A	-8.8560E-03	3.5424E-01	3.5424E-01	0.546E-01
Bi-212		7.8204E-01	5.1037E-01	5.1314E-01	0.307E+00
BI-214		7.8652E-01	2.0895E-01	2.1540E-01	0.937E-01
CO-60	#A	-5.2086E-03	3.8169E-02	3.8170E-02	0.218E-01
CS-137	A	3.6980E-02	5.1888E-02	5.1948E-02	0.395E-01
EU-152	#A	-8.5115E-02	1.6243E-01	1.6259E-01	0.122E+00
EU-154	A	3.5326E-02	1.1964E-01	1.1968E-01	0.540E-01
K-40		1.0553E+01	1.5475E+00	1.7129E+00	0.132E+00
Pa-234	A	3.3943E-02	7.8181E-02	7.8237E-02	0.123E+00
Pb-210		1.3114E+00	1.3218E+00	1.3258E+00	0.899E+00
Pb-212		8.0565E-01	1.5141E-01	1.6336E-01	0.939E-01
PB-214		8.4849E-01	1.9833E-01	2.0748E-01	0.963E-01
RA-226	A	4.1751E-01	1.3790E+00	1.3793E+00	0.113E+01
Th-230	#A	-9.6068E+00	1.1105E+02	1.1106E+02	0.977E+01
Th-234	A	2.9144E-01	1.8132E+00	1.8134E+00	0.140E+01
Tl-208		3.0700E-01	8.5087E-02	1.0151E-01	0.837E-01
U-235		1.1687E-01	8.5297E-02	8.5754E-02	0.666E-01

- All peaks for activity calculation had bad shape.
* - Activity omitted from total
& - Activity omitted from total and all peaks had bad shape.
< - MDA value printed.
A - Activity printed, but activity < MDA.
B - Activity < MDA and failed test.
C - Area < Critical level.
F - Failed fraction or key line test.
H - Halflife limit exceeded

---------- S U M M A R Y ----------

Total Activity (42.2 to 3353.9 keV) 1.538E+01 pCi/g

Laboratory: New World Technology

ORTEC g v - i (3263) Npp32 G53W3.10 29-JUN-2010 18:55:49
New World Technology Spectrum name: 4N000320.An1

Sample description
Parcel G 18-PG-C0284-08 342g
6/29/10 11:21

Acquisition information
Start time: 29-Jun-2010 17:18:37
Live time: 2700
Real time: 2703

- -

***** S U M M A R Y O F N U C L I D E S I N S A M P L E *****

Nuclide		Time of Count Activity pCi/g	Uncertainty 2 Sigma Counting pCi/g	Total pCi/g	MDA pCi/g
Ac-228		8.0021E-01	2.8434E-01	2.8967E-01	0.232E+00
AM-241	#A	-1.4712E-01	8.7505E-01	8.7515E-01	0.289E+00
Bi-212		4.0677E-01	4.3055E-01	4.3144E-01	0.307E+00
BI-214		5.9911E-01	1.9062E-01	1.9474E-01	0.855E-01
CO-60	#A	5.5624E-03	7.8459E-03	7.8549E-03	0.333E-01
CS-137	A	1.5012E-02	4.9957E-02	4.9967E-02	0.411E-01
EU-152	A	7.7407E-02	3.7548E-02	3.8117E-02	0.167E+00
EU-154	C	1.3748E-01	7.6826E-02	7.7704E-02	0.104E+00
K-40		1.1306E+01	1.5245E+00	1.7153E+00	0.120E+00
Pa-234	#C	1.5903E-01	1.4986E-01	1.5051E-01	0.111E+00
Pb-210	#	0.0000E+00	0.0000E+00	0.0000E+00	0.000E+00
Pb-212		8.4599E-01	1.4479E-01	1.5848E-01	0.842E-01
Pb-214		7.1501E-01	2.1813E-01	2.2410E-01	0.106E+00
RA-226	#A	-4.0723E-01	1.2483E+00	1.2483E+00	0.289E+00
Th-230	#A	-3.1836E+01	4.1761E+02	4.1765E+02	0.223E+02
Th-234	#A	-1.9143E+00	5.3104E+00	5.3135E+00	0.226E+01
Tl-208	C	1.9055E-01	6.1924E-02	7.0819E-02	0.310E-01
U-235	#A	1.1489E-02	1.9096E-02	1.9116E-02	0.709E-01

- All peaks for activity calculation had bad shape.
* - Activity omitted from total
& - Activity omitted from total and all peaks had bad shape.
< - MDA value printed.
A - Activity printed, but activity < MDA.
B - Activity < MDA and failed test.
C - Area < Critical level.
F - Failed fraction or key line test.
H - Halflife limit exceeded

---------- S U M M A R Y ----------

Total Activity (50.9 to 3245.1 keV) 1.427E+01 pCi/g

Laboratory: New World Technology

ORTEC g v - i (3263) Npp32 G53W3.10 29-JUN-2010 18:04:08
New World Technology Spectrum name: 6N000435.An1

Sample description
Parcel G 18-PG-C0284-09 362g
6/29/10 11:24

Acquisition information
Start time: 29-Jun-2010 17:18:54
Live time: 2700
Real time: 2704

- -

***** S U M M A R Y O F N U C L I D E S I N S A M P L E *****

Nuclide		Time of Count Activity pCi/g	Uncertainty 2 Sigma Counting pCi/g	Total pCi/g	MDA pCi/g
Ac-228		9.6845E-01	2.6504E-01	2.7336E-01	0.123E+00
AM-241	#A	4.5824E-03	6.1150E-02	6.1151E-02	0.533E-01
Bi-212		5.7640E-01	4.1353E-01	4.1538E-01	0.298E+00
BI-214		4.5477E-01	1.3338E-01	1.3676E-01	0.793E-01
CO-60	#A	-1.8166E-03	2.0165E-02	2.0166E-02	0.158E-01
CS-137	#A	-2.2378E-03	4.5317E-02	4.5317E-02	0.296E-01
EU-152	A	6.4007E-02	5.4060E-02	5.4331E-02	0.909E-01
EU-154	A	5.8291E-02	6.5746E-02	6.5931E-02	0.645E-01
K-40		1.1291E+01	1.4120E+00	1.6159E+00	0.200E+00
Pa-234	C	2.1898E-01	1.1782E-01	1.1937E-01	0.101E+00
Pb-210	#	8.4719E-01	9.0625E-01	9.0865E-01	0.634E+00
Pb-212		7.3174E-01	1.1426E-01	1.2712E-01	0.664E-01
PB-214		8.0161E-01	1.5105E-01	1.6166E-01	0.571E-01
RA-226	A	8.1800E-01	1.0538E+00	1.0557E+00	0.849E+00
Th-230	A	5.8529E-01	6.2917E+00	6.2925E+00	0.517E+01
Th-234	#A	3.3446E-01	1.6355E+00	1.6358E+00	0.115E+01
Tl-208	C	7.2359E-02	2.6178E-02	2.9250E-02	0.662E-01
U-235		1.5975E-01	9.5452E-02	9.6213E-02	0.575E-01

- All peaks for activity calculation had bad shape.
* - Activity omitted from total
& - Activity omitted from total and all peaks had bad shape.
< - MDA value printed.
A - Activity printed, but activity < MDA.
B - Activity < MDA and failed test.
C - Area < Critical level.
F - Failed fraction or key line test.
H - Halflife limit exceeded

---------- S U M M A R Y ----------

Total Activity (33.3 to 2659.2 keV) 1.498E+01 pCi/g

Laboratory: New World Technology

ORTEC g v - i (3263) Npp32 G53W3.10 29-JUN-2010 20:35:14
New World Technology Spectrum name: 6N000437.An1

Sample description
Parcel G 18-PG-C0284-09DUP 362g
6/29/10 11:24

Acquisition information
Start time: 29-Jun-2010 19:50:02
Live time: 2700
Real time: 2704

- -

***** S U M M A R Y O F N U C L I D E S I N S A M P L E *****

Nuclide		Time of Count Activity pCi/g	Uncertainty 2 Sigma Counting pCi/g	Total pCi/g	MDA pCi/g
Ac-228		9.3822E-01	2.4995E-01	2.5822E-01	0.143E+00
AM-241	#A	6.3190E-02	1.1393E-01	1.1407E-01	0.767E-01
Bi-212	A	2.0460E-01	3.8116E-01	3.8141E-01	0.305E+00
BI-214		4.5462E-01	1.2294E-01	1.2661E-01	0.671E-01
CO-60	#A	9.8099E-03	2.6520E-02	2.6529E-02	0.212E-01
CS-137		5.4901E-02	3.6418E-02	3.6604E-02	0.245E-01
EU-152	A	1.0807E-03	8.7292E-04	8.7771E-04	0.913E-01
EU-154	A	1.2945E-02	1.2933E-02	1.2980E-02	0.630E-01
K-40		9.8924E+00	1.2666E+00	1.4416E+00	0.945E-01
Pa-234	A	7.3325E-02	8.1891E-02	8.2142E-02	0.972E-01
Pb-210		6.4335E-01	8.1987E-01	8.2140E-01	0.599E+00
Pb-212		6.6151E-01	1.1121E-01	1.2208E-01	0.631E-01
PB-214		7.1018E-01	1.6359E-01	1.7136E-01	0.677E-01
RA-226	A	4.5546E-01	1.0769E+00	1.0774E+00	0.882E+00
Th-230	#A	-2.8915E-01	6.4264E+00	6.4264E+00	0.536E+00
Th-234	#A	-9.1234E-02	1.2998E+00	1.2998E+00	0.108E+01
Tl-208		3.3291E-01	7.9939E-02	9.9973E-02	0.618E-01
U-235		6.4459E-02	7.1169E-02	7.1335E-02	0.579E-01

- All peaks for activity calculation had bad shape.
* - Activity omitted from total
& - Activity omitted from total and all peaks had bad shape.
< - MDA value printed.
A - Activity printed, but activity < MDA.
B - Activity < MDA and failed test.
C - Area < Critical level.
F - Failed fraction or key line test.
H - Halflife limit exceeded

---------- S U M M A R Y ----------

Total Activity (33.3 to 2659.2 keV) 1.304E+01 pCi/g

Laboratory: New World Technology

ORTEC g v - i (3263) Npp32 G53W3.10 29-JUN-2010 20:30:50
New World Technology Spectrum name: 7N000414.An1

Sample description
Parcel G 18-PG-C0284-10 339g
6/29/10 11:27

Acquisition information
Start time: 29-Jun-2010 19:00:32
Live time: 5400
Real time: 5408

- -

***** S U M M A R Y O F N U C L I D E S I N S A M P L E *****

Nuclide	Time of Count Activity pCi/g	Uncertainty 2 Sigma Counting pCi/g	Total pCi/g	MDA pCi/g
Ac-228	1.3417E+00	2.3098E-01	2.4890E-01	0.142E+00
AM-241 #A	-8.3766E-03	3.0230E+00	3.0230E+00	0.477E-01
Bi-212	1.0474E+00	3.8517E-01	3.9172E-01	0.249E+00
BI-214	8.0015E-01	1.3750E-01	1.4744E-01	0.639E-01
CO-60 #A	-1.7133E-02	9.3358E-02	9.3365E-02	0.164E-01
CS-137	5.4465E-02	4.6465E-02	4.6609E-02	0.352E-01
EU-152 #A	-2.3446E-02	1.6311E-02	1.6432E-02	0.884E-01
EU-154 C	1.5805E-01	8.6865E-02	8.7891E-02	0.267E-01
K-40	1.0424E+01	1.1453E+00	1.3557E+00	0.213E+00
Pa-234 C	1.1411E-01	1.1300E-01	1.1345E-01	0.794E-01
Pb-210 #	6.8033E-01	9.1472E-01	9.1629E-01	0.644E+00
Pb-212	9.8327E-01	1.1020E-01	1.3322E-01	0.692E-01
PB-214	8.1757E-01	1.7191E-01	1.8167E-01	0.882E-01
RA-226	1.0668E+00	1.0061E+00	1.0094E+00	0.809E+00
Th-230 #A	-1.1091E+01	1.5609E+02	1.5610E+02	0.378E+01
Th-234 A	5.1671E-01	1.0572E+00	1.0583E+00	0.929E+00
Tl-208	3.6422E-01	8.0102E-02	1.0359E-01	0.580E-01
U-235	7.2579E-02	8.3264E-02	8.3445E-02	0.554E-01

- All peaks for activity calculation had bad shape.
* - Activity omitted from total
& - Activity omitted from total and all peaks had bad shape.
< - MDA value printed.
A - Activity printed, but activity < MDA.
B - Activity < MDA and failed test.
C - Area < Critical level.
F - Failed fraction or key line test.
H - Halflife limit exceeded

---------- S U M M A R Y ----------

Total Activity (42.2 to 3353.9 keV) 1.690E+01 pCi/g

Laboratory: New World Technology

ORTEC g v - i (3263) Npp32 G53W3.10 29-JUN-2010 21:22:46
New World Technology Spectrum name: 4N000321.An1

Sample description
Parcel G 18-PG-C0284-11 358g
6/29/10 11:30

Acquisition information
Start time: 29-Jun-2010 19:51:25
Live time: 5400
Real time: 5408

- -

***** S U M M A R Y O F N U C L I D E S I N S A M P L E *****

Nuclide		Time of Count Activity pCi/g	Uncertainty 2 Sigma Counting pCi/g	Total pCi/g	MDA pCi/g
Ac-228		5.1592E-01	2.6001E-01	2.6245E-01	0.196E+00
AM-241	A	1.2559E-01	6.1210E-01	6.1220E-01	0.502E+00
Bi-212		6.2794E-01	3.8591E-01	3.8827E-01	0.279E+00
BI-214		9.8630E-01	1.5740E-01	1.7053E-01	0.615E-01
CO-60	#A	1.6238E-02	2.2898E-02	2.2924E-02	0.299E-01
CS-137	A	2.4834E-02	3.4906E-02	3.4946E-02	0.278E-01
EU-152	A	4.4411E-02	2.7125E-02	2.7385E-02	0.100E+00
EU-154	C	1.2017E-01	1.0690E-01	1.0738E-01	0.400E-01
K-40		1.0216E+01	1.0689E+00	1.2835E+00	0.179E+00
Pa-234		1.7070E-01	1.7740E-01	1.7803E-01	0.114E+00
Pb-210	#	0.0000E+00	0.0000E+00	0.0000E+00	0.000E+00
Pb-212		1.4453E+00	1.3009E-01	1.7039E-01	0.687E-01
Pb-214		1.0642E+00	1.6775E-01	1.8435E-01	0.737E-01
RA-226		1.2209E+00	1.0786E+00	1.0825E+00	0.865E+00
Th-230	#A	-1.4904E+01	9.7012E+01	9.7045E+01	0.255E+02
Th-234	#A	-1.6955E+00	4.0079E+00	4.0112E+00	0.169E+01
Tl-208	C	3.3058E-01	5.6630E-02	8.2226E-02	0.623E-01
U-235	#A	2.6050E-02	4.4578E-02	4.4621E-02	0.598E-01

- All peaks for activity calculation had bad shape.
* - Activity omitted from total
& - Activity omitted from total and all peaks had bad shape.
< - MDA value printed.
A - Activity printed, but activity < MDA.
B - Activity < MDA and failed test.
C - Area < Critical level.
F - Failed fraction or key line test.
H - Halflife limit exceeded

---------- S U M M A R Y ----------

Total Activity (50.9 to 3245.1 keV) 1.608E+01 pCi/g

Laboratory: New World Technology

ORTEC g v - i (3263) Npp32 G53W3.10 29-JUN-2010 21:17:41
New World Technology Spectrum name: 1N000825.An1

Sample description
Parcel G 18-PG-C0284-12 369g
6/29/10 11:33

Acquisition information
Start time: 29-Jun-2010 19:46:32
Live time: 5400
Real time: 5403

- -

***** S U M M A R Y O F N U C L I D E S I N S A M P L E *****

Nuclide		Time of Count Activity pCi/g	Uncertainty Counting pCi/g	2 Sigma Total pCi/g	MDA pCi/g
Ac-228		1.3774E+00	2.2510E-01	2.4440E-01	0.102E+00
AM-241	#A	1.5960E-02	6.2671E-02	6.2687E-02	0.469E-01
Bi-212		8.2479E-01	3.2035E-01	3.2523E-01	0.203E+00
BI-214		8.4914E-01	1.2649E-01	1.3853E-01	0.494E-01
CO-60	#A	-2.7379E-04	7.2229E-03	7.2229E-03	0.487E-02
CS-137	A	5.6518E-03	3.5084E-02	3.5086E-02	0.291E-01
EU-152	A	-1.2917E-01	3.5460E-01	3.5477E-01	0.710E-01
EU-154	C	6.2648E-02	5.0603E-02	5.0881E-02	0.389E-01
K-40		6.2548E+00	8.7386E-01	9.7622E-01	0.399E+00
Pa-234	A	5.3132E-02	7.3282E-02	7.3429E-02	0.578E-01
Pb-210	#	4.9171E-01	6.5885E-01	6.5999E-01	0.477E+00
Pb-212		1.2418E+00	9.4053E-02	1.3337E-01	0.459E-01
Pb-214		8.5891E-01	1.1387E-01	1.2951E-01	0.643E-01
RA-226		9.0170E-01	7.4971E-01	7.5280E-01	0.599E+00
Th-230	#	5.7258E+00	6.5185E+00	6.5903E+00	0.451E+01
Th-234		1.7513E+00	9.2062E-01	9.3558E-01	0.802E+00
Tl-208		4.1719E-01	6.1896E-02	9.7423E-02	0.259E-01
U-235		7.4489E-02	6.3995E-02	6.4242E-02	0.406E-01

- All peaks for activity calculation had bad shape.
* - Activity omitted from total
& - Activity omitted from total and all peaks had bad shape.
< - MDA value printed.
A - Activity printed, but activity < MDA.
B - Activity < MDA and failed test.
C - Area < Critical level.
F - Failed fraction or key line test.
H - Halflife limit exceeded

---------- S U M M A R Y ----------

Total Activity (36.6 to 2885.2 keV) 1.455E+01 pCi/g

Laboratory: New World Technology

ORTEC g v - i (3263) Npp32 G53W3.10 29-JUN-2010 21:25:09
New World Technology Spectrum name: 5N000370.An1

Sample description
Parcel G 18-PG-C0284-13 324g
6/29/10 11:36

Acquisition information
Start time: 29-Jun-2010 19:52:49
Live time: 5400
Real time: 5404

- -

***** S U M M A R Y O F N U C L I D E S I N S A M P L E *****

Nuclide		Time of Count Activity pCi/g	Uncertainty 2 Sigma Counting pCi/g	Total pCi/g	MDA pCi/g
Ac-228		1.0452E+00	2.0717E-01	2.1940E-01	0.105E+00
AM-241	A	2.3869E-03	7.9749E-02	7.9749E-02	0.659E-01
Bi-212		7.4710E-01	3.0505E-01	3.0926E-01	0.203E+00
BI-214		7.5967E-01	1.5892E-01	1.6676E-01	0.662E-01
CO-60	#	4.4316E-02	2.6547E-02	2.6715E-02	0.214E-01
CS-137		4.2352E-02	4.0214E-02	4.0315E-02	0.307E-01
EU-152	C	1.3182E-01	5.8276E-02	5.9338E-02	0.562E-01
EU-154	C	1.7084E-01	1.2580E-01	1.2663E-01	0.260E-01
K-40		6.7204E+00	1.0252E+00	1.1268E+00	0.704E+00
Pa-234	C	1.9335E-01	1.2292E-01	1.2408E-01	0.809E-01
Pb-210	A	2.2161E-01	8.2311E-01	8.2330E-01	0.598E+00
Pb-212		8.9664E-01	9.7672E-02	1.1917E-01	0.602E-01
Pb-214		7.0245E-01	1.3708E-01	1.4608E-01	0.667E-01
RA-226		8.9480E-01	8.1093E-01	8.1375E-01	0.640E+00
Th-230	#	6.8227E+00	8.0542E+00	8.1368E+00	0.558E+01
Th-234	#A	6.8433E-01	1.2177E+00	1.2195E+00	0.920E+00
Tl-208		5.0410E-01	9.1278E-02	1.2883E-01	0.961E-02
U-235	C	9.0662E-02	7.7202E-02	7.7506E-02	0.432E-01

- All peaks for activity calculation had bad shape.
* - Activity omitted from total
& - Activity omitted from total and all peaks had bad shape.
< - MDA value printed.
A - Activity printed, but activity < MDA.
B - Activity < MDA and failed test.
C - Area < Critical level.
F - Failed fraction or key line test.
H - Halflife limit exceeded

---------- S U M M A R Y ----------

Total Activity (37.9 to 3020.7 keV) 1.236E+01 pCi/g

Laboratory: New World Technology

ORTEC g v - i (3263) Npp32 G53W3.10 29-JUN-2010 19:48:50
New World Technology Spectrum name: 6N000436.An1

Sample description
Parcel G 18-PG-C0284-14 354g
6/29/10 11:39

Acquisition information
Start time: 29-Jun-2010 19:02:42
Live time: 2700
Real time: 2704

- -

***** S U M M A R Y O F N U C L I D E S I N S A M P L E *****

Nuclide		Time of Count Activity pCi/g	Uncertainty Counting pCi/g	2 Sigma Total pCi/g	MDA pCi/g
Ac-228		8.3581E-01	2.7334E-01	2.7937E-01	0.151E+00
AM-241	#A	4.7876E-02	7.8550E-02	7.8666E-02	0.628E-01
Bi-212		5.1752E-01	4.4299E-01	4.4439E-01	0.330E+00
BI-214		7.1903E-01	1.6566E-01	1.7242E-01	0.684E-01
CO-60	#A	-8.5454E-03	3.4555E-01	3.4555E-01	0.249E-01
CS-137	A	2.3421E-02	5.0322E-02	5.0347E-02	0.407E-01
EU-152	#A	1.0964E-01	8.5654E-02	8.6157E-02	0.115E+00
EU-154	C	1.3558E-01	9.2780E-02	9.3488E-02	0.760E-01
K-40	#	8.8681E+00	1.2979E+00	1.4371E+00	0.218E+00
Pa-234	C	1.0962E-01	1.6756E-01	1.6784E-01	0.104E+00
Pb-210		9.9009E-01	9.9757E-01	1.0005E+00	0.707E+00
Pb-212		1.1202E+00	1.3126E-01	1.5654E-01	0.688E-01
PB-214		7.6690E-01	1.4572E-01	1.5579E-01	0.620E-01
RA-226	A	6.9882E-01	1.1063E+00	1.1076E+00	0.898E+00
Th-230	#A	4.2165E+00	7.9581E+00	7.9901E+00	0.597E+01
Th-234	#	2.3269E+00	1.6051E+00	1.6203E+00	0.111E+01
Tl-208		3.0170E-01	6.9988E-02	8.8649E-02	0.632E-01
U-235	C	6.5653E-02	8.7095E-02	8.7237E-02	0.603E-01

- All peaks for activity calculation had bad shape.
* - Activity omitted from total
& - Activity omitted from total and all peaks had bad shape.
< - MDA value printed.
A - Activity printed, but activity < MDA.
B - Activity < MDA and failed test.
C - Area < Critical level.
F - Failed fraction or key line test.
H - Halflife limit exceeded

---------- S U M M A R Y ----------

Total Activity (33.3 to 2659.2 keV) 1.546E+01 pCi/g

Laboratory: New World Technology

ORTEC g v - i (3263) Npp32 G53W3.10 29-JUN-2010 21:24:00
New World Technology Spectrum name: 2N000506.An1

Sample description
Parcel G 18-PG-C0284-15 350g
6/29/10 11:42

Acquisition information
Start time: 29-Jun-2010 19:51:47
Live time: 5400
Real time: 5409

- -

***** S U M M A R Y O F N U C L I D E S I N S A M P L E *****

Nuclide	Time of Count Activity pCi/g	Uncertainty Counting pCi/g	2 Sigma Total pCi/g	MDA pCi/g
Ac-228	2.0726E+00	2.7800E-01	3.1273E-01	0.128E+00
AM-241 #A	6.1294E-02	3.3928E-01	3.3933E-01	0.260E+00
Bi-212	1.0683E+00	3.9280E-01	3.9948E-01	0.246E+00
BI-214	1.5640E+00	1.8662E-01	2.1366E-01	0.729E-01
CO-60 #A	-4.7901E-02	9.6142E-01	9.6142E-01	0.256E-01
CS-137	1.1849E-01	4.9146E-02	4.9788E-02	0.276E-01
EU-152 A	1.3743E-02	7.9905E-03	8.0750E-03	0.125E+00
EU-154 C	1.3085E-01	1.0412E-01	1.0471E-01	0.599E-01
K-40	8.5865E+00	1.0969E+00	1.2490E+00	0.763E+00
Pa-234	2.2276E-01	1.8024E-01	1.8129E-01	0.132E+00
Pb-210 #C	0.0000E+00	4.1529E+00	4.1529E+00	0.000E+00
Pb-212	1.9266E+00	1.3548E-01	1.9968E-01	0.731E-01
PB-214	1.4849E+00	1.4204E-01	1.7763E-01	0.666E-01
RA-226	9.8096E-01	1.1630E+00	1.1654E+00	0.946E+00
Th-230 #A	-9.7109E+00	7.2785E+01	7.2803E+01	0.121E+02
Th-234	2.6823E+00	1.6732E+00	1.6926E+00	0.135E+01
Tl-208	7.4286E-01	8.2175E-02	9.5780E-02	0.361E-01
U-235	8.8378E-02	7.7602E-02	7.7890E-02	0.629E-01

- All peaks for activity calculation had bad shape.
* - Activity omitted from total
& - Activity omitted from total and all peaks had bad shape.
< - MDA value printed.
A - Activity printed, but activity < MDA.
B - Activity < MDA and failed test.
C - Area < Critical level.
F - Failed fraction or key line test.
H - Halflife limit exceeded

---------- S U M M A R Y ----------

Total Activity (32.4 to 2597.5 keV) 2.056E+01 pCi/g

Laboratory: New World Technology

ORTEC g v - i (3263) Npp32 G53W3.10 29-JUN-2010 21:25:36
New World Technology Spectrum name: 3N000583.An1

Sample description
Parcel G 18-PG-C0284-16 341g
6/29/10 11:45

Acquisition information
Start time: 29-Jun-2010 19:54:24
Live time: 5400
Real time: 5405

- -

***** S U M M A R Y O F N U C L I D E S I N S A M P L E *****

Nuclide		Time of Count Activity pCi/g	Uncertainty Counting pCi/g	2 Sigma Total pCi/g	MDA pCi/g
Ac-228		1.2743E+00	2.2828E-01	2.4467E-01	0.107E+00
AM-241	A	4.0905E-02	8.5289E-02	8.5367E-02	0.693E-01
Bi-212		8.2232E-01	4.2988E-01	4.3352E-01	0.271E+00
BI-214		9.3399E-01	1.1941E-01	1.3461E-01	0.536E-01
CO-60	#A	-4.3498E-02	2.5111E-01	2.5113E-01	0.264E-01
CS-137	A	1.5469E-02	4.5096E-02	4.5108E-02	0.367E-01
EU-152	#A	-8.3077E-02	5.9001E-02	5.9419E-02	0.109E+00
EU-154	C	1.0450E-01	1.1230E-01	1.1265E-01	0.615E-01
K-40		1.0511E+01	1.1542E+00	1.3663E+00	0.351E+00
Pa-234	C	1.0982E-01	8.7222E-02	8.7751E-02	0.983E-01
Pb-210	#A	2.7704E-01	9.2982E-01	9.3007E-01	0.657E+00
Pb-212		1.1022E+00	1.1424E-01	1.4175E-01	0.654E-01
PB-214		6.8140E-01	1.3542E-01	1.4399E-01	0.819E-01
RA-226		1.1008E+00	9.2187E-01	9.2561E-01	0.744E+00
Th-230	#A	-1.0769E+01	7.4029E+01	7.4051E+01	0.722E+01
Th-234	A	1.0383E+00	1.2132E+00	1.2172E+00	0.108E+01
Tl-208		4.7861E-01	9.0228E-02	1.2486E-01	0.394E-01
U-235	C	6.2729E-02	9.3188E-02	9.3308E-02	0.543E-01

- All peaks for activity calculation had bad shape.
* - Activity omitted from total
& - Activity omitted from total and all peaks had bad shape.
< - MDA value printed.
A - Activity printed, but activity < MDA.
B - Activity < MDA and failed test.
C - Area < Critical level.
F - Failed fraction or key line test.
H - Halflife limit exceeded

---------- S U M M A R Y ----------

Total Activity (34.9 to 2779.2 keV) 1.690E+01 pCi/g

Laboratory: New World Technology

ORTEC g v - i (3263) Npp32 G53W3.10 30-JUN-2010 10:13:02
New World Technology Spectrum name: 6N000438.An1

Sample description
Parcel G 18-PG-C0284-17 342g
6/29/10 11:48

Acquisition information
Start time: 30-Jun-2010 07:57:54
Live time: 5400
Real time: 5410

- -

***** S U M M A R Y O F N U C L I D E S I N S A M P L E *****

Nuclide		Time of Count Activity pCi/g	Uncertainty Counting pCi/g	2 Sigma Total pCi/g	MDA pCi/g
Ac-228		1.5061E+00	1.8390E-01	2.1131E-01	0.111E+00
AM-241	A	5.5139E-02	9.1441E-02	9.1573E-02	0.743E-01
Bi-212		9.0521E-01	3.3706E-01	3.4265E-01	0.230E+00
BI-214		1.0989E+00	1.4564E-01	1.6295E-01	0.585E-01
CO-60	#C	2.9871E-02	2.0639E-02	2.0737E-02	0.141E-01
CS-137	A	1.0300E-02	3.5861E-02	3.5867E-02	0.299E-01
EU-152	A	5.4391E-02	2.7927E-02	2.8305E-02	0.763E-01
EU-154	A	2.2109E-02	2.6739E-02	2.6805E-02	0.496E-01
K-40	#	1.0085E+01	1.0592E+00	1.2706E+00	0.245E+00
Pa-234	A	8.6931E-02	9.3369E-02	9.3679E-02	0.906E-01
Pb-210	#	1.2249E+00	9.6047E-01	9.6519E-01	0.610E+00
Pb-212		1.5497E+00	1.0839E-01	1.6022E-01	0.568E-01
PB-214		1.1737E+00	1.7058E-01	1.9028E-01	0.718E-01
RA-226		7.4136E-01	8.5100E-01	8.5284E-01	0.691E+00
Th-230	A	1.5909E+00	7.3654E+00	7.3703E+00	0.604E+01
Th-234	#	3.0729E+00	1.3866E+00	1.4171E+00	0.906E+00
Tl-208		5.2904E-01	7.4327E-02	1.2094E-01	0.463E-01
U-235		8.6408E-02	5.6350E-02	5.6727E-02	0.461E-01

- All peaks for activity calculation had bad shape.
* - Activity omitted from total
& - Activity omitted from total and all peaks had bad shape.
< - MDA value printed.
A - Activity printed, but activity < MDA.
B - Activity < MDA and failed test.
C - Area < Critical level.
F - Failed fraction or key line test.
H - Halflife limit exceeded

---------- S U M M A R Y ----------

Total Activity (33.3 to 2659.2 keV) 1.115E+01 pCi/g

Laboratory: New World Technology

ORTEC g v - i (3263) Npp32 G53W3.10 30-JUN-2010 18:05:55
New World Technology Spectrum name: 6N000439.An1

Sample description
Parcel G 18-PG-C0284-18 321g
6/29/10 11:51

Acquisition information
Start time: 30-Jun-2010 16:11:41
Live time: 5400
Real time: 5410

- -

***** S U M M A R Y O F N U C L I D E S I N S A M P L E *****

Nuclide		Time of Count Activity pCi/g	Uncertainty Counting pCi/g	2 Sigma Total pCi/g	MDA pCi/g
Ac-228		1.0795E+00	2.3431E-01	2.4590E-01	0.104E+00
AM-241	A	2.4183E-02	8.3227E-02	8.3255E-02	0.682E-01
Bi-212		7.0735E-01	3.7122E-01	3.7433E-01	0.273E+00
BI-214		7.4624E-01	1.1228E-01	1.2276E-01	0.580E-01
CO-60	A	1.8234E-02	1.8173E-02	1.8214E-02	0.186E-01
CS-137	A	6.5710E-03	3.4408E-02	3.4411E-02	0.291E-01
EU-152	A	-1.6759E-02	2.1034E-02	2.1082E-02	0.726E-01
EU-154	A	2.5737E-02	2.0338E-02	2.0454E-02	0.518E-01
K-40		7.8138E+00	1.0185E+00	1.1545E+00	0.468E+00
Pa-234	A	4.3516E-02	4.7222E-02	4.7376E-02	0.818E-01
Pb-210		8.7877E-01	8.2836E-01	8.3118E-01	0.564E+00
Pb-212		1.1178E+00	1.0114E-01	1.3218E-01	0.551E-01
PB-214		7.6039E-01	1.3256E-01	1.4337E-01	0.625E-01
RA-226		9.7297E-01	8.5975E-01	8.6289E-01	0.692E+00
Th-230	A	1.0563E+00	5.3628E+00	5.3658E+00	0.439E+01
Th-234		1.4877E+00	1.3061E+00	1.3138E+00	0.905E+00
Tl-208		3.7754E-01	6.2499E-02	9.2422E-02	0.493E-01
U-235	C	1.2134E-01	8.3802E-02	8.4303E-02	0.482E-01

- All peaks for activity calculation had bad shape.
* - Activity omitted from total
& - Activity omitted from total and all peaks had bad shape.
< - MDA value printed.
A - Activity printed, but activity < MDA.
B - Activity < MDA and failed test.
C - Area < Critical level.
F - Failed fraction or key line test.
H - Halflife limit exceeded

---------- S U M M A R Y ----------

Total Activity (33.3 to 2659.2 keV) 1.594E+01 pCi/g

Laboratory: New World Technology

ORTEC g v - i (3263) Npp32 G53W3.10 30-JUN-2010 20:14:35
New World Technology Spectrum name: 5N000373.An1

Sample description
Parcel G 18-PG-C0284-19 367g
6/29/10 12:33

Acquisition information
Start time: 30-Jun-2010 16:58:34
Live time: 5400
Real time: 5405

- -

***** S U M M A R Y O F N U C L I D E S I N S A M P L E *****

Nuclide		Time of Count Activity pCi/g	Uncertainty Counting pCi/g	2 Sigma Total pCi/g	MDA pCi/g
Ac-228		2.1432E+00	1.8575E-01	2.3758E-01	0.114E+00
AM-241	A	4.1712E-02	8.7994E-02	8.8072E-02	0.717E-01
Bi-212		1.7598E+00	3.8788E-01	4.0596E-01	0.235E+00
BI-214		1.6812E+00	1.7529E-01	2.0792E-01	0.622E-01
CO-60	A	1.2167E-02	1.5506E-02	1.5527E-02	0.216E-01
CS-137	A	1.6918E-02	3.4661E-02	3.4680E-02	0.279E-01
EU-152	C	1.1866E-01	5.5323E-02	5.6230E-02	0.788E-01
EU-154	C	8.1898E-02	5.5056E-02	5.5492E-02	0.435E-01
K-40		8.6917E+00	1.1136E+00	1.2672E+00	0.657E+00
Pa-234	C	1.1381E-01	9.5554E-02	9.6072E-02	0.891E-01
Pb-210		8.3140E-01	7.7085E-01	7.7361E-01	0.637E+00
Pb-212		2.4781E+00	1.3243E-01	2.3052E-01	0.597E-01
Pb-214		1.5633E+00	1.3636E-01	1.7665E-01	0.673E-01
RA-226		2.1486E+00	9.2612E-01	9.4025E-01	0.709E+00
Th-230	#A	3.3389E+00	8.3685E+00	8.3876E+00	0.611E+01
Th-234		2.4694E+00	1.1507E+00	1.1744E+00	0.961E+00
Tl-208		9.8878E-01	1.1947E-01	2.1464E-01	0.848E-02
U-235		1.1888E-01	8.1525E-02	8.2019E-02	0.512E-01

- All peaks for activity calculation had bad shape.
* - Activity omitted from total
& - Activity omitted from total and all peaks had bad shape.
< - MDA value printed.
A - Activity printed, but activity < MDA.
B - Activity < MDA and failed test.
C - Area < Critical level.
F - Failed fraction or key line test.
H - Halflife limit exceeded

---------- S U M M A R Y ----------

Total Activity (37.9 to 3020.7 keV) 2.487E+01 pCi/g

Laboratory: New World Technology

ORTEC g v - i (3263) Npp32 G53W3.10 30-JUN-2010 18:05:32
New World Technology Spectrum name: 7N000416.An1

Sample description
Parcel G 18-PG-C0284-20 337g
6/29/10 12:36

Acquisition information
Start time: 30-Jun-2010 16:12:10
Live time: 5400
Real time: 5407

- -

***** S U M M A R Y O F N U C L I D E S I N S A M P L E *****

Nuclide		Time of Count Activity pCi/g	Uncertainty Counting pCi/g	2 Sigma Total pCi/g	MDA pCi/g
Ac-228		8.6789E-01	1.9379E-01	2.0286E-01	0.102E+00
AM-241	#	9.3584E-02	1.1137E-01	1.1168E-01	0.761E-01
Bi-212		8.8669E-01	3.6536E-01	3.7031E-01	0.228E+00
BI-214		6.5779E-01	1.5283E-01	1.5897E-01	0.724E-01
CO-60	#A	1.4508E-02	1.5121E-02	1.5153E-02	0.215E-01
CS-137	A	3.4255E-02	4.5207E-02	4.5266E-02	0.356E-01
EU-152	#A	-4.8070E-02	7.0009E-02	7.0128E-02	0.103E+00
EU-154	C	9.2247E-02	6.7357E-02	6.7809E-02	0.540E-01
K-40		9.8875E+00	1.1325E+00	1.3251E+00	0.237E+00
Pa-234	C	1.4526E-01	1.0664E-01	1.0740E-01	0.825E-01
Pb-210	#A	3.3534E-01	7.1079E-01	7.1128E-01	0.547E+00
Pb-212		7.6508E-01	1.0135E-01	1.1690E-01	0.618E-01
PB-214		6.6080E-01	1.2439E-01	1.3314E-01	0.649E-01
RA-226		9.0314E-01	9.3612E-01	9.3861E-01	0.755E+00
Th-230	#A	-8.0339E+00	3.9973E+01	3.9996E+01	0.641E+01
Th-234	A	7.9826E-01	1.1630E+00	1.1655E+00	0.915E+00
Tl-208		2.7274E-01	7.4741E-02	8.9474E-02	0.583E-01
U-235	C	1.0886E-01	8.4675E-02	8.5074E-02	0.507E-01

- All peaks for activity calculation had bad shape.
* - Activity omitted from total
& - Activity omitted from total and all peaks had bad shape.
< - MDA value printed.
A - Activity printed, but activity < MDA.
B - Activity < MDA and failed test.
C - Area < Critical level.
F - Failed fraction or key line test.
H - Halflife limit exceeded

---------- S U M M A R Y ----------

Total Activity (42.2 to 3353.9 keV) 1.400E+01 pCi/g

Laboratory: New World Technology

ORTEC g v - i (3263) Npp32 G53W3.10 30-JUN-2010 10:13:32
New World Technology Spectrum name: 7N000415.An1

Sample description
Parcel G 18-PG-C0284-21 357g
6/29/10 12:39

Acquisition information
Start time: 30-Jun-2010 07:59:20
Live time: 5400
Real time: 5408

- -

***** S U M M A R Y O F N U C L I D E S I N S A M P L E *****

Nuclide		Time of Count Activity pCi/g	Uncertainty Counting pCi/g	2 Sigma Total pCi/g	MDA pCi/g
Ac-228		7.0539E-01	2.0800E-01	2.1363E-01	0.137E+00
AM-241	A	2.4866E-02	7.5518E-02	7.5550E-02	0.617E-01
Bi-212		7.3053E-01	4.1801E-01	4.2096E-01	0.260E+00
BI-214		7.7576E-01	1.4157E-01	1.5069E-01	0.676E-01
CO-60	#A	9.9647E-03	7.6028E-03	7.6326E-03	0.156E-01
CS-137	#A	-3.8524E-03	7.2623E-02	7.2624E-02	0.305E-01
EU-152	A	-9.8913E-02	1.2004E-01	1.2033E-01	0.936E-01
EU-154	C	8.3062E-02	5.7594E-02	5.8023E-02	0.474E-01
K-40		1.0165E+01	1.1100E+00	1.3162E+00	0.210E+00
Pa-234	A	7.7815E-02	7.6540E-02	7.6842E-02	0.952E-01
Pb-210		1.1195E+00	8.2736E-01	8.3204E-01	0.573E+00
Pb-212		1.0160E+00	1.0860E-01	1.3333E-01	0.659E-01
PB-214		8.0335E-01	1.3172E-01	1.4381E-01	0.798E-01
RA-226	A	4.7704E-01	9.5326E-01	9.5394E-01	0.782E+00
Th-230	#A	-7.9552E+00	4.1448E+01	4.1470E+01	0.572E+01
Th-234	A	5.4507E-01	1.0582E+00	1.0595E+00	0.923E+00
Tl-208		3.8987E-01	8.7578E-02	1.1231E-01	0.577E-01
U-235		6.8306E-02	5.7969E-02	5.8199E-02	0.467E-01

- All peaks for activity calculation had bad shape.
* - Activity omitted from total
& - Activity omitted from total and all peaks had bad shape.
< - MDA value printed.
A - Activity printed, but activity < MDA.
B - Activity < MDA and failed test.
C - Area < Critical level.
F - Failed fraction or key line test.
H - Halflife limit exceeded

---------- S U M M A R Y ----------

Total Activity (42.2 to 3353.9 keV) 1.577E+01 pCi/g

Laboratory: New World Technology

ORTEC g v - i (3263) Npp32 G53W3.10 12-JUL-2010 08:33:17
New World Technology Spectrum name: 1N000859.An1

Sample description
Parcel G 18-PG-C0284-22 356g
6/29/10 12:42

Acquisition information
Start time: 09-Jul-2010 13:45:51
Live time: 5400
Real time: 5403

- -

***** S U M M A R Y O F N U C L I D E S I N S A M P L E *****

Nuclide		Time of Count Activity pCi/g	Uncertainty 2 Sigma Counting pCi/g	Total pCi/g	MDA pCi/g
Ac-228		2.0951E+00	2.1998E-01	2.6335E-01	0.115E+00
AM-241	#A	-6.9485E-03	6.1572E-02	6.1572E-02	0.710E-02
Bi-212		1.2087E+00	3.7366E-01	3.8262E-01	0.241E+00
BI-214		1.3916E+00	1.9299E-01	2.1404E-01	0.778E-01
CO-60	#C	3.2651E-02	2.0866E-02	2.0982E-02	0.221E-01
CS-137		3.3996E-02	3.7369E-02	3.7439E-02	0.290E-01
EU-152	A	-1.1753E-01	1.4830E-01	1.4864E-01	0.724E-01
EU-154	C	9.6709E-02	5.5189E-02	5.5794E-02	0.390E-01
K-40		8.6230E+00	1.0852E+00	1.2399E+00	0.308E+00
Pa-234	#A	1.3324E-02	3.3624E-02	3.3645E-02	0.564E-01
Pb-210		1.0051E+00	6.3238E-01	6.3731E-01	0.506E+00
Pb-212		1.9418E+00	1.2426E-01	1.9313E-01	0.568E-01
Pb-214		1.2647E+00	1.2711E-01	1.5624E-01	0.644E-01
RA-226		1.4907E+00	8.8712E-01	8.9425E-01	0.703E+00
Th-230		5.9821E+00	6.7964E+00	6.8716E+00	0.546E+01
Th-234		3.1105E+00	1.0773E+00	1.1172E+00	0.901E+00
Tl-208		6.4749E-01	7.7744E-02	1.4028E-01	0.329E-01
U-235	C	1.0860E-01	7.7801E-02	7.8233E-02	0.505E-01

- All peaks for activity calculation had bad shape.
* - Activity omitted from total
& - Activity omitted from total and all peaks had bad shape.
< - MDA value printed.
A - Activity printed, but activity < MDA.
B - Activity < MDA and failed test.
C - Area < Critical level.
F - Failed fraction or key line test.
H - Halflife limit exceeded

---------- S U M M A R Y ----------

Total Activity (36.6 to 2885.2 keV) 2.278E+01 pCi/g

Laboratory: New World Technology

ORTEC g v - i (3263) Npp32 G53W3.10 30-JUN-2010 20:16:21
New World Technology Spectrum name: 5N000372.An1

Sample description
Parcel G 18-PG-C0284-23 354g
6/29/10 12:45

Acquisition information
Start time: 30-Jun-2010 14:30:23
Live time: 5400
Real time: 5404

- -

***** S U M M A R Y O F N U C L I D E S I N S A M P L E *****

Nuclide		Time of Count Activity pCi/g	Uncertainty Counting pCi/g	2 Sigma Total pCi/g	MDA pCi/g
Ac-228		1.0302E+00	1.9514E-01	2.0773E-01	0.115E+00
AM-241	#A	4.1251E-02	6.4459E-02	6.4564E-02	0.507E-01
Bi-212		7.3247E-01	3.0515E-01	3.0920E-01	0.208E+00
BI-214		9.0087E-01	1.3534E-01	1.4801E-01	0.592E-01
CO-60	#A	2.8418E-03	2.3560E-02	2.3561E-02	0.193E-01
CS-137		5.2513E-02	3.6970E-02	3.7138E-02	0.272E-01
EU-152	#A	3.8392E-02	3.9858E-02	3.9991E-02	0.582E-01
EU-154	C	1.4633E-01	8.1623E-02	8.2558E-02	0.376E-01
K-40		7.8695E+00	1.0604E+00	1.1934E+00	0.658E+00
Pa-234	C	1.4081E-01	8.6212E-02	8.7089E-02	0.760E-01
Pb-210	#	1.4417E+00	8.6970E-01	8.7703E-01	0.601E+00
Pb-212		1.0856E+00	1.0094E-01	1.3046E-01	0.573E-01
Pb-214		8.7958E-01	1.2506E-01	1.4011E-01	0.583E-01
RA-226		1.2384E+00	8.4505E-01	8.5022E-01	0.661E+00
Th-230	A	2.0860E+00	6.1214E+00	6.1316E+00	0.499E+01
Th-234	A	4.6557E-01	9.3637E-01	9.3741E-01	0.837E+00
Tl-208		4.9970E-01	8.7653E-02	1.2571E-01	0.879E-02
U-235		7.6311E-02	7.6214E-02	7.6432E-02	0.413E-01

- All peaks for activity calculation had bad shape.
* - Activity omitted from total
& - Activity omitted from total and all peaks had bad shape.
< - MDA value printed.
A - Activity printed, but activity < MDA.
B - Activity < MDA and failed test.
C - Area < Critical level.
F - Failed fraction or key line test.
H - Halflife limit exceeded

---------- S U M M A R Y ----------

Total Activity (37.9 to 3020.7 keV) 1.581E+01 pCi/g

Laboratory: New World Technology

ORTEC g v - i (3263) Npp32 G53W3.10 30-JUN-2010 18:18:08
New World Technology Spectrum name: 3N000587.An1

Sample description
Parcel G 18-PG-C0284-24 343g
6/29/10 12:48

Acquisition information
Start time: 30-Jun-2010 16:44:03
Live time: 5400
Real time: 5405

- -

***** S U M M A R Y O F N U C L I D E S I N S A M P L E *****

Nuclide		Time of Count Activity pCi/g	Uncertainty 2 Sigma Counting pCi/g	Total pCi/g	MDA pCi/g
Ac-228		1.1219E+00	2.1493E-01	2.2849E-01	0.104E+00
AM-241	A	4.8563E-02	8.9876E-02	8.9980E-02	0.729E-01
Bi-212		7.7665E-01	3.7137E-01	3.7512E-01	0.263E+00
BI-214		9.9551E-01	1.5652E-01	1.6995E-01	0.606E-01
CO-60	#A	-3.5031E-02	1.0811E-01	1.0814E-01	0.262E-01
CS-137	A	1.8795E-02	3.1236E-02	3.1262E-02	0.249E-01
EU-152	A	-4.2849E-01	1.0115E+00	1.0121E+00	0.922E-01
EU-154	C	1.2094E-01	5.5717E-02	5.6651E-02	0.525E-01
K-40		8.6212E+00	9.3752E-01	1.1130E+00	0.238E+00
Pa-234	C	2.0451E-01	1.0059E-01	1.0217E-01	0.102E+00
Pb-210	#A	1.2144E-01	8.3835E-01	8.3841E-01	0.609E+00
Pb-212		1.0238E+00	1.0660E-01	1.3206E-01	0.655E-01
PB-214		8.2462E-01	1.1519E-01	1.2953E-01	0.637E-01
RA-226		1.1430E+00	9.4076E-01	9.4472E-01	0.759E+00
Th-230	#A	-8.2103E+00	3.4941E+01	3.4969E+01	0.646E+01
Th-234	#A	-2.7062E-01	1.2792E+00	1.2795E+00	0.106E+01
Tl-208		3.5732E-01	8.1785E-02	1.0412E-01	0.391E-01
U-235	C	7.0561E-02	9.2580E-02	9.2734E-02	0.539E-01

- All peaks for activity calculation had bad shape.
* - Activity omitted from total
& - Activity omitted from total and all peaks had bad shape.
< - MDA value printed.
A - Activity printed, but activity < MDA.
B - Activity < MDA and failed test.
C - Area < Critical level.
F - Failed fraction or key line test.
H - Halflife limit exceeded

---------- S U M M A R Y ----------

Total Activity (34.9 to 2779.2 keV) 1.486E+01 pCi/g

Laboratory: New World Technology

ORTEC g v - i (3263) Npp32 G53W3.10 12-JUL-2010 08:46:10
New World Technology Spectrum name: 1N000860.An1

Sample description
Parcel G 18-PG-C0284-25 367g
6/29/10 12:51

Acquisition information
Start time: 09-Jul-2010 15:38:13
Live time: 5400
Real time: 5403

- -

***** S U M M A R Y O F N U C L I D E S I N S A M P L E *****

Nuclide		Time of Count Activity pCi/g	Uncertainty Counting pCi/g	2 Sigma Total pCi/g	MDA pCi/g
Ac-228		1.8141E+00	2.3554E-01	2.6683E-01	0.767E-01
AM-241	#	8.3114E-02	1.1306E-01	1.1330E-01	0.715E-01
Bi-212		1.2917E+00	3.6666E-01	3.7706E-01	0.230E+00
BI-214		1.2077E+00	1.5331E-01	1.7308E-01	0.573E-01
CO-60	#A	-8.3460E-04	1.3749E-03	1.3761E-03	0.174E-01
CS-137	A	2.3265E-02	3.4796E-02	3.4831E-02	0.276E-01
EU-152	A	-1.6930E-01	3.7810E-01	3.7837E-01	0.734E-01
EU-154	C	7.1954E-02	5.9805E-02	6.0115E-02	0.414E-01
K-40		7.7952E+00	1.0816E+00	1.2099E+00	0.329E+00
Pa-234	C	1.8635E-01	1.1269E-01	1.1386E-01	0.681E-01
Pb-210		1.3510E+00	7.5747E-01	7.6490E-01	0.510E+00
Pb-212		1.8311E+00	1.2039E-01	1.8420E-01	0.569E-01
Pb-214		1.2499E+00	1.4410E-01	1.6978E-01	0.621E-01
RA-226		9.7650E-01	8.6365E-01	8.6680E-01	0.693E+00
Th-230	#A	2.7860E+00	6.7764E+00	6.7928E+00	0.495E+01
Th-234		2.2982E+00	1.0095E+00	1.0329E+00	0.861E+00
Tl-208		6.1692E-01	6.3690E-02	1.2819E-01	0.268E-01
U-235		7.7361E-02	5.4491E-02	5.4804E-02	0.455E-01

- All peaks for activity calculation had bad shape.
* - Activity omitted from total
& - Activity omitted from total and all peaks had bad shape.
< - MDA value printed.
A - Activity printed, but activity < MDA.
B - Activity < MDA and failed test.
C - Area < Critical level.
F - Failed fraction or key line test.
H - Halflife limit exceeded

---------- S U M M A R Y ----------

Total Activity (36.6 to 2885.2 keV) 2.051E+01 pCi/g

Laboratory: New World Technology

ORTEC g v - i (3263) Npp32 G53W3.10 30-JUN-2010 20:24:02
New World Technology Spectrum name: 5N000371.An1

Sample description
Parcel G 18-PG-C0284-26 376g
6/29/10 12:54

Acquisition information
Start time: 30-Jun-2010 09:32:46
Live time: 5400
Real time: 5404

- -

***** S U M M A R Y O F N U C L I D E S I N S A M P L E *****

Nuclide		Time of Count Activity pCi/g	Uncertainty Counting pCi/g	2 Sigma Total pCi/g	MDA pCi/g
Ac-228		1.3306E+00	2.4840E-01	2.6487E-01	0.113E+00
AM-241	#A	3.0276E-02	6.2536E-02	6.2595E-02	0.495E-01
Bi-212		6.0652E-01	3.1423E-01	3.1693E-01	0.228E+00
BI-214		1.0026E+00	1.1882E-01	1.3626E-01	0.501E-01
CO-60	#A	5.3275E-03	7.5432E-03	7.5518E-03	0.158E-01
CS-137		5.6980E-02	3.8251E-02	3.8442E-02	0.282E-01
EU-152	A	5.2555E-02	5.4838E-02	5.5018E-02	0.698E-01
EU-154	C	6.5042E-02	5.9286E-02	5.9541E-02	0.364E-01
K-40		7.5220E+00	9.4517E-01	1.0804E+00	0.599E+00
Pa-234	C	1.3149E-01	1.0693E-01	1.0754E-01	0.747E-01
Pb-210		7.9639E-01	6.4612E-01	6.4913E-01	0.481E+00
Pb-212		1.1691E+00	9.9967E-02	1.3386E-01	0.545E-01
Pb-214		9.4000E-01	1.3576E-01	1.5163E-01	0.611E-01
RA-226		1.4190E+00	8.1711E-01	8.2412E-01	0.634E+00
Th-230	#A	-2.5474E-01	5.0794E+00	5.0794E+00	0.373E+00
Th-234	A	5.8389E-01	9.1205E-01	9.1374E-01	0.808E+00
Tl-208		5.8098E-01	9.1012E-02	1.3878E-01	0.828E-02
U-235		8.7681E-02	9.4539E-02	9.4771E-02	0.423E-01

- All peaks for activity calculation had bad shape.
* - Activity omitted from total
& - Activity omitted from total and all peaks had bad shape.
< - MDA value printed.
A - Activity printed, but activity < MDA.
B - Activity < MDA and failed test.
C - Area < Critical level.
F - Failed fraction or key line test.
H - Halflife limit exceeded

---------- S U M M A R Y ----------

Total Activity (37.9 to 3020.7 keV) 1.542E+01 pCi/g

Laboratory: New World Technology

ORTEC g v - i (3263) Npp32 G53W3.10 01-JUL-2010 12:46:29
New World Technology Spectrum name: 1N000826.An1

Sample description
Parcel G 18-PG-C0284-27 347g
6/29/10 12:57

Acquisition information
Start time: 01-Jul-2010 10:34:14
Live time: 5400
Real time: 5403

- -

***** S U M M A R Y O F N U C L I D E S I N S A M P L E *****

Nuclide		Time of Count Activity pCi/g	Uncertainty 2 Sigma Counting pCi/g	Total pCi/g	MDA pCi/g
Ac-228		1.3611E+00	2.1945E-01	2.3876E-01	0.750E-01
AM-241	A	3.0608E-02	6.8765E-02	6.8819E-02	0.559E-01
Bi-212		1.0024E+00	3.5013E-01	3.5673E-01	0.229E+00
BI-214		9.3050E-01	1.3537E-01	1.4885E-01	0.513E-01
CO-60	#	4.0262E-02	2.1375E-02	2.1547E-02	0.787E-02
CS-137	A	1.8983E-02	3.5065E-02	3.5088E-02	0.281E-01
EU-152	A	-2.1995E-01	5.8718E-01	5.8747E-01	0.661E-01
EU-154	A	1.9951E-02	4.3442E-02	4.3475E-02	0.404E-01
K-40		7.8104E+00	9.1695E-01	1.0659E+00	0.207E+00
Pa-234	#A	-2.1626E-02	8.5158E-01	8.5158E-01	0.667E-01
Pb-210	#A	-5.4737E-01	6.6671E-01	6.6671E-01	0.194E+00
Pb-212		1.4327E+00	1.0696E-01	1.5277E-01	0.484E-01
Pb-214		8.6195E-01	1.3128E-01	1.4515E-01	0.710E-01
RA-226	A	4.3371E-01	7.8165E-01	7.8234E-01	0.640E+00
Th-230		4.9074E+00	5.8003E+00	5.8596E+00	0.464E+01
Th-234		2.2418E+00	9.1340E-01	9.3798E-01	0.793E+00
Tl-208		4.9486E-01	6.7920E-02	1.1215E-01	0.222E-01
U-235		7.0627E-02	6.1381E-02	6.1613E-02	0.415E-01

- All peaks for activity calculation had bad shape.
* - Activity omitted from total
& - Activity omitted from total and all peaks had bad shape.
< - MDA value printed.
A - Activity printed, but activity < MDA.
B - Activity < MDA and failed test.
C - Area < Critical level.
F - Failed fraction or key line test.
H - Halflife limit exceeded

---------- S U M M A R Y ----------

Total Activity (36.6 to 2885.2 keV) 1.625E+01 pCi/g

Laboratory: New World Technology