# *Interim Update*
# Red Hill Bulk Fuel Storage Facility Final Groundwater Protection Plan

**Pearl Harbor, Hawaii**

**January 2008**

*August 2014*

**Prepared for:**

**Department of the Navy, Commander**
**Naval Facilities Engineering Command, Pacific**
**Pearl Harbor, HI 96860-3134**

NAVFAC
Naval Facilities Engineering Command
NAVFAC PACIFIC

**Indefinite Delivery/ Indefinite Quantity Contract**
**Contract Number N62742-02-D-1802, CTO 007**
***Updated Under N62742-11-D-1800, Amendment 25***

# *Interim Update*
# Red Hill Bulk Fuel Storage Facility Final Groundwater Protection Plan

***Pearl Harbor, Hawaii***

**January 2008**

*August 2014*

**Prepared for:**

***Department of the Navy, Commander***
***Naval Facilities Engineering Command, Pacific***
***258 Makalapa Drive, Suite 100***
***Pearl Harbor, HI 96860-3134***

**Prepared under:**

**Indefinite Delivery/ Indefinite Quantity Contract**
**Contract Number N62742-02-D-1802, CTO 007**
***Updated under N62742-11-D-1800, Amendment 25***

# TABLE OF CONTENTS

Page

**EXECUTIVE SUMMARY ..... 1**
**1 INTRODUCTION ..... 1-1**
1.1 Description of the Facility ..... 1-1
1.2 Description of the Problem ..... 1-2
1.3 Groundwater Protection Plan Scope and Objectives ..... 1-3
1.4 Groundwater Protection Plan Updates ..... 1-4
1.5 Navy Region Hawaii Integrated Contingency Plan ..... 1-4
1.6 Water System Emergency Response Plan ..... 1-5
1.7 Conceptual Site Model and Risk ..... 1-5
1.7.1 Description of the Facility ..... 1-5
1.7.2 Nature and Extent of Contamination ..... 1-6
1.7.2.1 Rock Boring Sample Results ..... 1-6
1.7.2.2 Groundwater Sample Results ..... 1-6
1.7.2.3 Soil Vapor Sample Results ..... 1-7
1.7.3 Comprehensive Conceptual Site Model ..... 1-7
1.7.3.1 Groundwater Usage ..... 1-8
1.7.3.2 Contaminant Fate and Transport and Groundwater Modeling ..... 1-8
1.7.3.3 Risk Summary ..... 1-9
**2 APPLICABLE REGULATIONS AND GUIDANCE ..... 2-1**
2.1 Federal Regulations and Guidance ..... 2-1
2.1.1 Drinking Water and Potable Water Systems ..... 2-1
2.1.2 USTs ..... 2-1
2.1.2.1 Regulations Applicable to the Facility ..... 2-1
2.1.2.2 Regulations "To Be Considered" at the Facility ..... 2-2
2.2 Hawaii Regulations and Guidance ..... 2-3
2.2.1 Drinking Water and Potable Water System Regulations ..... 2-3
2.2.2 Hawaii Environmental Response Law and State Contingency Plan Regulations ..... 2-3
2.2.3 UST Regulations ..... 2-4
2.3 Non-Regulatory Guidance on Release Detection To Be Considered for the Facility ..... 2-4
2.3.1 Alternative Leak Detection Methods for Bulk Field Constructed Tanks ..... 2-5
2.4 Regulatory History of the Facility ..... 2-6
**3 TANK PREVENTIVE MAINTENANCE AND LEAK MONITORING PROGRAM ..... 3-1**
3.1 Tank Maintenance and Repair Program ..... 3-2
3.1.1 Tank Maintenance and Repair Histories ..... 3-2
3.1.2 Tank Inspections and Repairs ..... 3-2
3.1.3 Current Status of the USTs ..... 3-2
3.2 Current Petroleum Release Monitoring Systems ..... 3-3
3.2.1 Soil Vapor Monitoring System ..... 3-3
3.2.2 Groundwater Monitoring at the Facility ..... 3-3
3.3 Ongoing Groundwater Protection Activities ..... 3-4
3.3.1.1 Reporting Tank Inspections, Leaks, and Releases to *DOH* ..... 3-5
**4 GROUNDWATER MONITORING PROGRAM, EVALUATION OF RESULTS, AND RESPONSE ACTIONS ..... 4-1**
4.1 Groundwater Monitoring Program ..... 4-1
4.1.1 Regulatory Requirements ..... 4-1
4.1.2 Groundwater Monitoring Network ..... 4-1

4.1.3 Groundwater Sampling and Analysis Protocol ..... 4-2
4.2 Groundwater Analytical Results ..... 4-2
4.3 Groundwater Action Levels ..... 4-3
4.3.1 STEP 1: Compare Analytical Results to Action Levels and Conduct Trend Evaluation 4-3
4.3.2 STEP 2: Take Actions for Results That Exceed the Specified Action Levels ..... 4-3
4.4 Responsibilities ..... 4-5
**5 CONTINGENCIES FOR CONTAMINATION OF POTABLE WATER ..... 5-1**
5.1 Potential Alternative Sources of Potable Water ..... 5-1
5.2 Water Treatment Options ..... 5-1
5.2.1 Summary of Potable Water Treatment Facility Technologies ..... 5-3
5.2.2 Summary of Groundwater Treatment Technologies ..... 5-4
5.2.2.1 Pump and Treat Evaluation ..... 5-5
5.2.2.2 Enhanced Bioremediation Evaluation ..... 5-5
**6 REFERENCES ..... 6-1**

## LIST OF TABLES

Table ES-1. DOH HEER Technical Guidance Manual Environmental Hazard Evaluation Cross Reference Table ..... ES-4
Table 3-1. Tank Inspections and Scheduling ..... 3-9
Table 4-1. Action Levels ..... 4-4
Table 4-2. Responses to Groundwater Monitoring Results ..... 4-4
Table 4-3. Navy Chain of Command and Responsibilities for Implementing the Groundwater Protection Plan ..... 4-7
Table 5-1. Summary of Joint Base Pearl Harbor-Hickam Water System ..... 5-2
Table 5-2. Summary of Joint Base Pearl Harbor-Hickam Water System Components ..... 5-2

## LIST OF FIGURES

Figure 5-1 Pearl Harbor Water System Schematic ..... 5-7

## LIST OF APPENDICES

*Appendix A Regulatory Issues and Documents*
*Appendix B Modified API 653 Tank Inspection Procedure*
*Appendix C Work Plan/Sampling and Analysis Plan (October 2012)*
*Appendix D DOH Quarterly Deliverables Examples*
*Appendix E Groundwater Treatment Technologies*
*Appendix F DOH HEER Technical Guidance Manual Environmental Hazard Evaluation Cross Reference Table*

# LIST OF ACRONYMS AND ABBREVIATIONS

| | |
|---|---|
| 3-D | Three Dimensional |
| AFHAC | Automatic Fuel Handling and Control |
| AFHE | Automatic Fuel Handling Equipment |
| AMEC | AMEC Earth and Environmental, Inc. |
| AOR | Area of Responsibility |
| API | American Petroleum Institute |
| ATG | Automatic Tank Gauging |
| AVGAS | Aviation gas |
| bgs | Below ground surface |
| BTEX | Benzene, Toluene, Ethylbenzene, Xylene |
| CAP | Corrective Action Plan |
| CERCLA | Comprehensive Environmental Response, Compensation, and Liability Act |
| CFR | Code of Federal Regulations |
| COMNAV REG HI | Commander, Navy Region Hawaii |
| COPC | Constituent of Potential Concern |
| CSM | Conceptual Site Model |
| CTO | Contract Task Order |
| *DOH* | *State of Hawaii Department of Health* |
| DoN | Department of the Navy |
| EAL | Environmental Action Level (State of Hawaii) |
| *EHE* | *Environmental Hazard Evaluation* |
| EPC | Exposure Point Concentration |
| EPH | Extractable Petroleum Hydrocarbon |
| °F | Degrees Fahrenheit |
| F-76 | Marine diesel fuel |
| FIC | Facility Incident Commander |
| FIMP | Fuel Integrity Management Program |
| FISC | Fleet and Industrial Supply Center |
| FSP | Field Sampling Plan |
| GAC | Granular Activated Carbon |
| gpd | Gallons per day |
| gph | Gallons per hour |
| gpm | Gallons per minute |
| HAR | Hawaii Administrative Rules |
| HBWS | Honolulu Board of Water Supply |
| *HEER* | *Hazard Evaluation and Emergency Response* |
| HERL | Hawaii Environmental Response Law, UST Program |
| HI | Hawaii |
| HPWS | Hawaii Potable Water Systems |
| ICP | Integrated Contingency Plan |
| ICS | Incident Command System |
| *JBPHH* | *Joint Base Pearl Harbor-Hickam* |
| *JBPHHWS* | *Joint Base Pearl Harbor-Hickam Water System* |
| JP | Jet Propulsion |
| JP-5 | Jet Propulsion fuel 5 |
| JP-8 | Jet Propulsion fuel 8 |
| KWA | Ken Wilcox Associates, Inc. |
| LNAPL | Light Non-Aqueous Phase Liquid |
| LRDP | Low Range Differential Pressure |
| LUST | Leaking Underground Storage Tank |
| MCL | Maximum Contaminant Level |
| Mgal | Million gallons |
| mgd | Million gallons per day |
| mg/L | Milligrams per liter |
| mL/hour | Milliliters per hour |
| µg/L | Micrograms per liter |
| MOGAS | Motor gas |
| MP | Monitoring Point |
| msl | Mean sea level |
| MtBE | Methyl tert butyl ether |
| MTG-TGI | Mass Tank Gauging – Tank Gauging Interface |
| NA | Not Applicable |

| | |
|---|---|
| NAVFAC | Naval Facilities Engineering Command |
| *NAVSUP FLC PH* | *Naval Supply Fleet Logistics Center Pearl Harbor* |
| NCP | National Contingency Plan |
| ND | Navy Distillate |
| NELAC | National Environmental Laboratory Accreditation Conference |
| NFESC | Naval Facilities Engineering Service Center |
| NOSC | Navy On-Scene Coordinator |
| NPL | National Priorities List |
| NPDW | National Primary Drinking Water |
| NSFO | Navy Special Fuel Oil |
| OHS | Oil and Hazardous Substances |
| PACDIV | Pacific Division |
| PAH | Polynuclear Aromatic Hydrocarbons |
| PD | Probability of Detection |
| PFA | Probability of False Alarm |
| PIE | Precision Instrumentation Equipment |
| PIMP | Pipeline Integrity Management Program |
| POE | Point of Entry |
| POL | Petroleum, Oils, and Lubricants |
| ppbV | Parts per billion, Vapor |
| PRG | Preliminary Remediation Goal |
| PWS | Public Works Center |
| RBAL | Risked Based Action Levels |
| RCRA | Resource Conservation and Recovery Act |
| RFS | Removed From Service |
| The Facility | Red Hill Fuel Storage Facility |
| SAP | Sampling and Analysis Plan |
| SARA | Superfund Amendments and Reauthorization Act |
| SCP | State Contingency Plan |
| SDG | Sample Delivery Group |
| SDWA | Safe Drinking Water Act |
| SDWB | Safe Drinking Water Branch |
| SI | Site Investigation |
| SPAWAR | Navy Space and Naval Warfare Center |
| SSRBL | Site-Specific, Risk-Based Levels |
| SVMP | Soil Vapor Monitoring Point |
| SVMS | Soil Vapor Monitoring System |
| SVOC | Semi-Volatile Organic Compound |
| SPCC | Spill Prevention Control and Countermeasure |
| SWAP | Source Water Assessment Program |
| TCE | Trichloroethylene |
| TEC | TEC, Inc. |
| TGM | Technical Guidance Manual |
| TGM-UST | Technical Guidance Manual for UST Closure and Release Response |
| TIMP | Tank Integrity Management Program |
| TPH-DRO | Total Petroleum Hydrocarbons, Diesel Range Organics |
| TPH-GRO | Total Petroleum Hydrocarbons, Gasoline Range Organics |
| TVH | Total Volatile Hydrocarbons |
| UH | University of Hawaii |
| UIC | Underground Injection Control |
| U.S. | United States |
| USEPA | United States Environmental Protection Agency |
| UST | Underground Storage Tank |
| UV | Ultraviolet |
| VOC | Volatile Organic Compound |
| VPH | Volatile Petroleum Hydrocarbons |

This page intentionally left blank.

# EXECUTIVE SUMMARY

This Groundwater Protection Plan was developed to mitigate the risk associated with inadvertent releases of fuel from the United States (U.S.) Navy Red Hill Bulk Fuel Storage Facility, Oahu, Hawaii (the Facility). Previous environmental Site Investigations (SIs) at the Facility showed that past inadvertent releases have contaminated the fractured basalt, basal groundwater, and soil vapor beneath the Facility with petroleum hydrocarbons. In response to these findings *and as requested by* the State of Hawaii Department of Health (*DOH*), the U.S. Navy:

- Conduct*ed* a detailed environmental SI at the Facility;
- Develop*ed* a groundwater model of the surrounding aquifers *and* evaluate*d* the risk associated with petroleum releases to the groundwater; and
- Prepare*d* a contingency plan to protect the U.S. Navy well 2254-01 (*Red Hill Shaft*), which lies down gradient from the Facility and provides drinking water to the U.S. Navy *Joint Base Pearl Harbor-Hickam Water System (JBPHHWS).*

*This interim update fulfills the requirement to review and update the Groundwater Protection Plan every five years. This interim update also fulfills the DOH request of 12 February 2014 to modify the Groundwater Protection Plan to comply with the requirements of Environmental Hazard Evaluations as specified in the DOH HEER Guidance. All changes from the 2009 revision appear in italics. A cross reference table for the requirements of EHEs as specified in the DOH-HEER EHE Guidance is provided in Table ES-1.*

The Facility consists of 20 underground storage tanks (USTs), each with the capacity to hold 12.5 million gallons (Mgal) of petroleum-based fuel as a reserve for the U.S. Navy Pacific Fleet. It was constructed in the field, entirely underground within the Red Hill Ridge for security and confidentiality reasons and was activated in 1943 to maintain the war effort. At the same time, the U.S. Navy well 2254-01 *(Red Hill Shaft)* was installed approximately 3,000 feet downgradient from the Facility, and included a water tunnel, known as an infiltration gallery, which extends across the water table to within 1,560 feet of the Facility. The U.S. Navy well 2254-01 currently provides potable water to the *JBPHHWS*, which serves approximately *65,230* military consumers. Model simulations of the measured contaminant concentrations beneath the Facility did not show contaminants entering the infiltration gallery at measurable concentrations. However, similar simulations showed hypothetical future releases of the jet propellant (JP-5 and JP-8) most commonly stored in the Facility USTs had the potential to contaminate the water that enters the infiltration gallery, if they are not identified quickly.

This Groundwater Protection Plan presents a strategy for ensuring that both the Facility and the U.S. Navy well 2254-01 can continue to operate at optimum efficiency into the future. This Groundwater Protection Plan focuses on long-term mitigation. It is not an emergency response plan.

The Facility USTs are deferred from many of the Federal and State UST regulations, including the requirement for release detection, because they are field constructed bulk fuel tanks.

However, following the notification of releases from the Facility, *DOH* strongly recommended the installation of a leak detection system to protect U.S. Navy well 2254-01. Due to the importance of the groundwater resource, the U.S. Navy has evaluated methods to detect leaks at the Facility in the past and continues to do so.

In addition, the U.S. Navy installed *four* groundwater monitoring wells within the lower access tunnel of the Facility and conducted soil vapor monitoring under the 18 active USTs. In accordance with this Groundwater Protection Plan, the U.S. Navy has implemented a groundwater monitoring program in which groundwater samples are collected quarterly from *four* groundwater monitoring wells installed in the Facility lower access tunnel, the U.S. Navy well 2254-01*, and two wells outside the tunnels (HDMW2253-03 and OWDFMW01)*. Samples are analyzed for specific petroleum compounds and mixtures in accordance with the *DOH* EALs (*DOH*, *2011*). The U.S. Navy *has and* will *continue to*:

- Maintain a complete database of chemical results from the groundwater sampling events;
- Evaluate concentration trends for chemicals of concern over time, evaluate chemical concentrations with respect to *DOH* drinking water EALs;
- Monitor the groundwater for concentrations that may indicate that liquid fuel may be in direct contact with groundwater beneath the tanks; and
- Submit concentration trend data and comparisons of sampling results to drinking water EALs to *DOH* quarterly.

In groundwater model simulations, an extended light non-aqueous-phase liquid (LNAPL) fuel plume of jet propellant (JP-5 or JP-8) within 1,099 feet of the U.S. Navy well 2254-01 infiltration gallery resulted in benzene concentrations greater than the Federal maximum contaminant level (MCL) of 5 µg/L in the infiltration gallery. It was estimated that a release as small as 16,000 gallons of JP-5 near Tanks 1 or 2 could result in this condition. The groundwater monitoring program provides Site-Specific, Risk-Based Levels (SSRBLs) for total petroleum hydrocarbons (4.5 mg/L) and benzene (0.75 mg/L). These are used as indicators that LNAPL is present. In addition, this Groundwater Protection Plan provides a table of recommended responses to contaminant levels and trends in each of the four *monitoring* wells *and the sampling point in the Red Hill Shaft* that are sampled quarterly.

In accordance with this Groundwater Protection Plan, the U.S. Navy implement*ed* a soil vapor monitoring program using the existing boreholes beneath each of the active tanks in the Facility to support leak detection and the groundwater monitoring program. Soil vapor monitoring beneath each tank can provide quick confirmation of potential leaks identified by the automatic system. This will potentially limit the size of a hypothetical fuel release, by shortening the confirmation and response time. Soil vapor *is* analyzed for total volatile hydrocarbons (TVH) with calibrated field instruments, and data *is* evaluated for changes in concentration, which would indicate a release of fuel from the associated tank. Along with confirmation sampling at suspected leaking tanks on an as needed basis, the U.S. Navy *implemented* collect*ion of* soil

vapor samples from slant borings beneath each tank *monthly*. The U.S. Navy will *continue to* maintain a complete database of SVMP results to evaluate trends.

The U.S. Navy will continue to conduct a rigorous maintenance schedule for all USTs in the Facility in accordance with the modified American Petroleum Institute (API) 653 *procedure*. The U.S. Navy will provide the results of the API inspections and maintenance reports to *DOH* upon request.

Finally, the Groundwater Protection Plan provides an overview of actions that would be required to remediate the basal drinking water aquifer if a large release of fuel were to migrate to the water table. Well head treatment facilities at the U.S. Navy well 2254-01 may be required to ensure that adequate water is available to meet the U.S. Navy mission at *JBPHH. In 2010, the* U.S. Navy estimated $*38,000,000* would be required for a *combination air stripping and* granular activated carbon water purification plant for the U.S. Navy *Red Hill* well shaft. *The annual operation and maintenance cost for the facility was estimated to be $6,700,000.*

Under site conditions, remediation of a large fuel release would be extremely costly and technically difficult, due to the underground nature of the Facility, the steep ridgeline upon which the Facility *is* located, the distance from ground surface to the aquifer (between 400 and 500 feet on the Red Hill ridgeline), and finally because of the complex hydrogeology associated with the fractured basalt aquifers. Pump and treat methods could be implemented but would be costly and inefficient in this environment. Multi-phased extraction may be more efficient, but very complex at the depths required.

Downgradient enhanced bioremediation was considered through the addition of dissolved oxygen to the groundwater. An array of wells between the Facility and the potable water infiltration gallery would be required as oxygen distribution points to create a reactive permeable barrier to the transmission of dissolved petroleum compounds. Air sparging, while economical, is inefficient in saturating the groundwater to enhance bioremediation. Oxygen release compounds or gas infusion technology could be considered to increase the efficiency of the barrier by increasing the dissolved oxygen content of the groundwater and the radius of influence.

Table ES-1. Summary of Substantive Changes to Comply with EHE Requirements as Specified in DOH-HEER Guidance

| Page No. | Section | Change |
|---|---|---|
| ES-1 | Executive Summary | Added as Paragraph 2: "*This interim update fulfills the requirement to review and update the Groundwater Protection Plan every five years. This update also fulfills the DOH request of 12 February 2014 to modify the Groundwater Protection Plan to comply with the requirements of Environmental Hazard Evaluations as specified in the DOH HEER Guidance.*" |
| 1-1 | 1 | Added to Paragraph 2: "*This update to the plan is intended only to incorporate additional information obtained since completion of the previous plan and to meet current requirements for an environmental hazard evaluation (EHE). This interim update fulfills the requirement to review and update the Groundwater Protection Plan every five years. This update also fulfills the State of Hawaii* |

| Table ES-1. Summary of Substantive Changes to Comply with EHE Requirements as Specified in DOH-HEER Guidance | | |
|---|---|---|
| Page No. | Section | Change |
| | | *Department of Health (DOH) request of 12 February 2014 to modify the Groundwater Protection Plan to comply with the requirements of EHEs as specified in the DOH HEER Guidance."* |
| 1-1 | 1 | Added as Paragraph 3: "*Preparatory work is currently in progress to update the Numerical Groundwater Model and the Contaminant Transport Analysis that were utilized as the basis for this Groundwater Protection Plan. In addition to the tasks already conducted under the Groundwater Protection Plan, the update effort is anticipated to include construction of additional groundwater monitoring wells, surveying to establish the elevations of key points within the aquifer system, additional water level monitoring and pump tests to further refine the groundwater model, and additional sampling and laboratory analysis to provide data that will enhance development of parameters for the contaminant transport analysis"* |
| 1-5 | 1.7 | Added to Paragraph 1: "*Preparatory work is currently in progress to update the Numerical Groundwater Model and the Contaminant Transport Analysis that were utilized as the basis for the 2008 Groundwater Protection Plan. This section will be revised following the Numerical Groundwater Model and the Contaminant Transport Analysis updates, if necessary."* |
| 2-3 | 2.2.2 | Revised end of Paragraph 1 to: "Methods and criteria for investigations and response actions conducted under the SCP are described in the *DOH Office of Hazard Evaluation and Emergency Response (HEER)* technical guidance manual (TGM) for the Implementation of the Hawaii State Contingency Plan (*DOH, 2009) hereafter referred to as the DOH-HEER TGM.* The *DOH-HEER* TGM *describes a three-stage process to* determine whether further action is necessary for a site:<br>*Site Investigation - determine the extent and magnitude of contamination;*<br>*Environmental Hazard Evaluation - determine the presence or absence of potential environmental hazards;*<br>*Response Action - determine appropriate actions to address the identified hazards.*<br>*The DOH-HEER TGM indicates that the DOH 'Tier 1 EALs may be used to identify contaminants above levels of potential concern. The investigation of contaminants below the EALs is generally not necessary.'"* |
| 2-4 | 2.2.3 | Revised end of Paragraph 1 to: "Regulations and requirements are explained in detail in the *Technical Guidance Manual for Underground Storage Tank Closure and Release Response,* (DOH, 2000), hereafter referred to as the DOH-UST TGM*, and the Evaluation of Environmental Hazards at Sites with Contaminated Soil and Groundwater (DOH, 2011 revised January 2012), hereafter referred to as the DOH-HEER EHE guidance."* |
| 2-4 | 2.2.3 | Added as Paragraph 2: "*A cross reference table for the requirements of EHEs as specified in the DOH-HEER EHE Guidance is provided in Appendix F."* |
| 2-4 | 2.2.4 | Deleted this section, "EALs as 'To be Considered' Guidance" |
| 2-5 | Table 2-1 | Deleted Reporting Requirements for UST Release Response |

# 1 INTRODUCTION

The Naval Facilities Engineering Command (NAVFAC) Pacific, tasked TEC Inc. (TEC) with the development of this Groundwater Protection Plan to evaluate the impact of inadvertent releases of petroleum, oils and lubricants (POL) from the *Naval Supply Fleet Logistics Center Pearl Harbor (NAVSUP FLC PH)* bulk fuel storage facility located at Red Hill, Oahu, Hawaii (herein referred to as the Facility). *The plan was* prepared under Contract No. N62742-02-D-1802, Amendment 6, Revision 3 Dated 12 October 2005 for Contract Task Order (CTO) 007. *The Groundwater Protection Plan was originally completed in January 2008 and was revised in December 2009. This plan was updated under Contract No. N62742-11-D-1800, Amendment 25, Dated 28March 2014.*

This *Groundwater Protection Plan addresses* procedures for evaluating and responding to releases to soil/rock or groundwater that are not an imminent threat but that could cause harm to human health or the environment due to subsequent contamination of various media. *This interim update to the plan is intended only to incorporate additional information obtained since completion of the previous plan and to meet current requirements for an environmental hazard evaluation (EHE). This interim update fulfills the requirement to review and update the Groundwater Protection Plan every five years. This interim update also fulfills the State of Hawaii Department of Health (DOH) request of 12 February 2014 to modify the Groundwater Protection Plan to comply with the requirements of EHEs as specified in the DOH HEER Guidance. All updates to the 2009 revision appear in italics.*

*Preparatory work is currently in progress to update the Numerical Groundwater Model and the Contaminant Transport Analysis that were utilized as the basis for this Groundwater Protection Plan. In addition to the tasks already conducted under the Groundwater Protection Plan, the update effort is anticipated to include construction of additional groundwater monitoring wells, surveying to establish the elevations of key points within the aquifer system, additional water level monitoring and pump tests to further refine the groundwater model, and additional sampling and laboratory analysis to provide data that will enhance development of parameters for the contaminant transport analysis.*

## 1.1 Description of the Facility

The Facility is located approximately 2.5 miles northeast of Pearl Harbor. The Facility lies along the western edge of the Koolau Range and is situated on a topographic ridge that divides the Halawa Valley and the Moanalua Valley. The site is bordered to the south by the Salt Lake volcanic crater, and the Site occupies approximately 144 acres of land. The majority of the surface topography of the Site lies at an elevation of approximately 200 to 500 feet above mean sea level (msl), however, much of the work conducted onsite is in underground tunnels, which are located between 100 to 120 feet msl.

The Facility was originally built to support World War II war efforts in the Pacific. Since then the Facility has been instrumental in storing and transporting fuel to support the U.S. Navy's mission throughout the world.

The Facility consists of *twenty* 12.5-million gallon (Mgal) underground storage tanks (USTs) constructed by the U.S. Government in the early 1940s. At the time of this *plan interim update*, 5 tanks (1, *5*, *14*, *17* and 19) were out of service. The steel tank storage system, constructed in-place, is comprised of two parallel rows of vertical tanks sloping south southeast towards Pearl Harbor and measuring approximately *250* feet in height and 100 feet in diameter. The upper domes of the tanks lie at depths varying between approximately 100 feet and 200 feet below the existing ground surface, and are accessed by interconnected tunnels. The pipelines extend 2.5 miles from the tanks to Pearl Harbor.

The tanks currently contain Jet Propulsion fuel no. 5 (JP-5), Jet Propulsion fuel no. 8 (JP-8) and F-76 (Diesel marine fuel), however they *have* historically contained diesel oil, Navy Special Fuel Oil (NSFO), Navy distillate (ND), F-76, aviation gas (AVGAS), motor gas (MOGAS), JP-5 and JP-8. Originally, Tanks 3 through 20 contained NSFO and Tanks 1 and 2 contained diesel oil. Over time, all tanks have been used to store a variety of fuel (TEC, 2005).

## 1.2 Description of the Problem

The potential impact of an inadvertent fuel release to the groundwater system is the main risk driver for the Facility. The Facility is approximately 100 feet above the basal groundwater table on the boundary of the Waimalu and Moanalua Aquifer Systems of the Pearl Harbor and Honolulu Aquifer Sectors, respectively. Both aquifers are sources of potable water for several public water systems. The Moanalua Aquifer and Waimalu Aquifer systems are classified by Mink and Lau as unconfined, basal, and flank. Their status is listed as currently used, fresh (chloride content below 250 milligrams per liter [mg/L]) drinking water sources that are irreplaceable and *have* a high vulnerability to contamination (Mink and Lau 1990). The nature of the fractured basalt beneath the site would make cleanup of a future petroleum release difficult.

There are several potable water supply wells in the vicinity of the Facility. The impact of a large release would be very costly and would jeopardize *the* Navy mission by potential loss of the potable water supplied by U.S. Navy well 2254-01 (*Red Hill Shaft*). The U.S. Navy well 2254-01 is located approximately 3,000 feet west and hydraulically downgradient from the USTs at the Facility. According to the Commission on Water Resources data for 1989-2005, on average approximately 4.4 million gallons per day (mgd) were withdrawn from this location. *Currently, approximately 2.4 mgd to 3.0 mgd are withdrawn during the winter season and 3.6 mgd to 4.4 mgd are withdrawn during the summer season.* This well supplies potable water to the *Joint Base Pearl Harbor-Hickam* Water System (*JBPHHWS*), which serves approximately *65,230* military consumers on Oahu. The Honolulu Board of Water Supply (HBWS) Halawa Shaft well 2354-01 is located approximately 5,000 feet northwest of the Facility. On average, 11.8 mgd of potable water is withdrawn from this location, approximately 12 percent of the total supply that

serves *more than 600,000* people on Oahu. In addition, the HBWS Moanalua wells (2153-10, 2153-11, 2153-12) lay approximately 6,700 feet south of the Facility and deliver potable water to the HBWS.

*Independent* investigations were not conducted prior to 1995. However, records indicate that one or more tanks may have leaked and were repaired. A maintenance program is currently evaluating the condition of specific tanks (TEC, 2005). Previous investigations (Ogden, 1995; AMEC, 2002; TEC, 2007) indicated that past inadvertent releases of POL have reached the basal aquifer. Based on the results of these investigations, the State of Hawaii Department of Health (*DOH*), Solid Waste Branch, UST Division recommended in a letter dated October 10, 2003 that the U.S. Navy develop a contingency plan "to protect the Navy's Halawa Adit No. 3 Drinking Water Pumping Station" (U.S. Navy well 2254-01). Although the Facility is addressed in the Navy Region Hawaii Integrated Contingency Plan (ICP), The Water Systems Emergency Response Plan (Earth Tech, 2005), and the Spill Prevention and Countermeasure (SPCC) Plan for COMNAVREG Hawaii (Hawaii Pacific Engineers, 2006), none of these plans addressed response actions to releases of POL to soil/rock or groundwater that could potentially threaten this drinking water supply (United States Environmental Protection Agency [USEPA] Safe Drinking Water Act [*SDWA*]). In addition, *DOH* requested documentation of any structural integrity or other engineering investigations that documented the condition of the Facility UST system as provided in the modified American Petroleum Institute (API) 653 *procedure* and presented in Section 3.1.1, Tank Maintenance and Repair History. *DOH* also recommended installation of a leak detection system for the USTs. These elements are all addressed in this Groundwater Protection Plan.

## 1.3 Groundwater Protection Plan Scope and Objectives

This Groundwater Protection Plan is the culmination of a comprehensive environmental site investigation (SI) to evaluate the impact of past releases of POL from the Facility. The SI included the construction of a network of groundwater monitoring wells to evaluate the impact of fuel on the basal aquifer, development of a three-dimensional (3-D) groundwater flow and contaminant transport model, and evaluation *of* the risk to nearby drinking water wells from mobile petroleum contaminants using a Tier 3 risk assessment. The conceptual site model (CSM) and risk assessment indicated that the Facility was geologically isolated from the ground surface and that the only migration pathway of significant concern resulting from non-catastrophic releases was via groundwater to drinking water wells.

This Groundwater Protection Plan is intended to document the steps that are being taken to prevent unacceptable risks associated with use of the groundwater potentially impacted by releases from the Facility to human health and the environment.

These steps include the following:

- Implementation of a tank inspection and maintenance program.
- Description of vapor monitoring results.

- Description of groundwater sampling and risk assessment.
- Implementation of a consistent, documented groundwater monitoring program that will provide adequate warning of any potential unacceptable risks to human health.
- Establishment of a decision system, including responsibilities and specific response actions that will be implemented when risk-based groundwater action levels are exceeded.
- *Periodic updates* of *the 2008* market survey to evaluate best available leak detection technologies available for large field constructed fuel storage facilities, such as Red Hill.

These steps are in accordance with the Hawaii Environmental Response Law (HERL), UST Program, and State Contingency Plan (SCP). These steps are intended to protect human health and the environment from non-catastrophic past, present and future releases of POL which are chronic in nature, defined as on the scale of 10 gallons per minute or less. Due to the nature of the Facility, releases of this size are very difficult to detect, but over time may cause severe damage to the groundwater resource and negatively impact the mission of the U.S. Navy. These steps are not intended to address risks associated with a catastrophic release of fuel to the environment resulting from a large rupture in the steel tanks or piping system. These catastrophic events would require emergency response actions that are not within the scope of this document.

## 1.4 Groundwater Protection Plan Updates

This groundwater protection plan will be reviewed every five years after the date of approval by *DOH* to determine if it needs to be updated to meet the objectives stated above. Either the document will be updated, or it will be documented that no update is required. In either situation, the decision or update shall be submitted to *DOH* for approval.

## 1.5 Navy Region Hawaii Integrated Contingency Plan

The Navy Region Hawaii ICP addresses potential catastrophic releases from the Pearl Harbor Fuel Storage Facilities that have the potential to impact navigable waters. This plan does not seek to protect groundwater resources that can be used for human consumption or for irrigation purposes. The ICP specifies the use of the National Incident Management System Incident Command System (ICS) during the response to address catastrophic oil and hazardous substances (OHS) releases from the Facility that have the potential to impact navigable water.

The Commander, Navy Region Hawaii (COMNAVREG HI) ICS organization is utilized when responding to large spills or emergency release incidents posing a substantial threat to the public or the environment at the Facility. COMNAVREG HI, as the Navy On-Scene Coordinator (NOSC), is responsible for directing and/or coordinating responses to OHS releases when it is beyond the spiller's capability. The Facility Incident Commander (FIC) will direct the response efforts of the Facility Release Response Management Team for releases at the Facility. If the response is beyond this team's capability, the NOSC will be notified and the Facilities Release

Response Management Team will become part of the NOSC ICS organization. The FIC can activate personnel as required depending on the incident size and complexity.

## 1.6 Water System Emergency Response Plan

The Water System Emergency Response Plan was developed as part of the USEPA SDWA to respond to terroristic attacks. It provides an independent set of procedures for the *JBPHHWS* to respond in the event of natural or man-made emergencies impacting this potable water system (Earth Tech, 2005). This plan provides procedures to mitigate the risk of exposure to contaminated water within the storage and transport facilities of the *JBPHHWS*, but does not address procedures to mitigate risk associated with contamination within the groundwater resource.

## 1.7 Conceptual Site Model and Risk

This Section describes the results of studies completed at the Facility (TEC, 2007). The subsections below include site-specific descriptions of the source, CSM, exposure pathways and receptors, contaminant fate and transport using groundwater modeling, and risk assessment. *Preparatory work is currently in progress to update the Numerical Groundwater Model and the Contaminant Transport Analysis that were utilized as the basis for the 2008 Groundwater Protection Plan. This section will be revised following the Numerical Groundwater Model and the Contaminant Transport Analysis updates, if necessary.*

### 1.7.1 Description of the Facility

The potential source of contamination at the Facility are the *twenty* 12.5-Mgal USTs and associated buried piping that hold petroleum products. The Facility began operating in 1943 and has the capacity to hold approximately 250 million gallons of fuel. It currently contains JP-5, JP-8, and F-76. The tank storage system is comprised of two parallel rows of vertical tanks sloping south southeast towards Pearl Harbor. The tanks are installed into native basalt, each measuring *approximately 250* feet in height and 100 feet in diameter. They are located approximately 100 to 200 feet below ground surface (bgs), and are accessed by interconnected tunnels. The fuel pipelines extend 2.5 miles within the tunnels to Pearl Harbor. The Facility is located between Moanalua Valley to the southeast and the North Halawa Valley to the northwest. These valley fills dip beneath the basal water table in the vicinity of the Facility. According to MODPATH simulations using the 3-D groundwater model developed for the Facility, the valley fills present semi-permeable barriers to the lateral migration of groundwater. For the purposes of this report, the groundwater sub-basin between these two valley fills will be called the Red Hill sub-basin. In addition, these simulations indicate that these valley fills are protective of the HBWS Halawa Shaft (2354-01) and HBWS Moanalua wells (2153-10, -11, and -12). The ten-year capture zones of these wells are contained by the valley fill barriers.

According to the Aquifer Identification and Classification for Oahu: Groundwater Protection Strategy For Hawaii (Mink and Lau, 1990), produced to support the *DOH* groundwater protection program, the Red Hill ridgeline makes up the boundary between the Waimalu System

of the Pearl Harbor Aquifer Sector and the Moanalua System of the Honolulu Aquifer Sector. No known groundwater divide exists along this geomorphic boundary and groundwater is believed to flow freely between these two aquifer designations at this boundary. As indicated in the previous paragraph, a more realistic geomorphic boundary for these two aquifers is the North Halawa Valley fill, which dips below the basal water table in upper North Halawa Valley and is estimated to be between 300 and 400 feet below msl at the base of Halawa Valley (Oki, 2005).

According to Mink and Lau (1990), both the Waimalu and Moanalua Systems are basal, unconfined, in flank lavas, and are currently used, drinking water sources, fresh, irreplaceable, and highly vulnerable to contamination.

The tanks in the Facility have historically contained diesel oil, NSFO, ND, F-76, AVGAS, MOGAS, JP-5 and JP-8. Originally, Tanks 3 through 20 contained NSFO, and Tanks 1 and 2 contained diesel oil. Over time, all tanks have been used to store a variety of fuel (TEC, 2005). Some records indicate that the tanks may have leaked and were repaired (TEC, 2005; see Section 3).

The pipelines associated with the Facility tanks run along tunnels where they can be inspected, except for pipelines immediately adjacent to the tanks, which are underground. Records do not indicate any major releases occurred from the external pipelines that could be a source of contamination reaching basal groundwater.

### 1.7.2 Nature and Extent of Contamination

#### 1.7.2.1 Rock Boring Sample Results

A slant borehole was advanced at an angle of 10- to 15-degrees from the floor of the lower tunnel directly adjacent to each of the USTs in the Facility, to a distance of approximately 125 feet from the point of entry (POE). These boreholes run from the inside edge to the outside edge, and approximately 10 to 20 feet below each UST. Petroleum contamination was evident in several of the cores, particularly beneath Tanks 1, 6, 14, and 16 based on testing of the rock. (AMEC Earth and Environmental, Inc. [AMEC], 2002). The most likely source of the petroleum contamination was from the USTs, although it is possible that the leaks could have originated from buried piping or spills in the tunnels that seeped into the rock. Core samples collected during subsequent drilling activities to install monitoring wells RHMW02 and RHMW03 within the Facility lower access tunnel showed no evidence of petroleum in the unsaturated rock at these locations.

#### 1.7.2.2 Groundwater Sample Results

The first SI groundwater sampling event was conducted in September of 2005 from the three wells within the Facility *(RHMW01, RHMW02, and RHMW03)*, the background well *(RHMW04)*, and the U.S. Navy well 2254-01. Total Petroleum Hydrocarbons in the Diesel Range Organics (TPH-DRO) exceeded State of Hawaii Environmental Action Levels (EALs) for drinking water at all wells except U.S. Navy well 2254-01. No evidence of petroleum was observed at U.S. Navy well 2254-01.

Groundwater from RHMW02, located upgradient from Tanks 5 and 6, had the highest concentrations of petroleum compounds. RHMW02 was the only well in which target Volatile Organic Compounds (VOCs) and Semi-Volatile Organic Compounds (SVOCs) were observed. Concentrations of TPH-DRO, Total Petroleum Hydrocarbons in the Gasoline Range Organics (TPH-GRO), trichloroethylene (TCE), naphthalene, 1-methylnaphthalene and 2-methylnaphthalene all exceeded one or more drinking water action levels (EALs or USEPA Region 9 Preliminary Remediation Goals [PRGs]) in this well.

Lead exceeded drinking water action levels in unfiltered samples, though filtered samples did not. According to the *DOH* (March 2000), groundwater action levels for inorganics are based on dissolved constituents, therefore unfiltered sample results are not appropriate for comparison.

The second SI groundwater sampling event was conducted in July 2006. Results were similar, except TCE was not observed. *Successive groundwater sampling events for RHMW02 through March 2014 continued to exhibit similar results. TPH-DRO was observed at 6.30 mg/L in October 2008, and at 5.20 mg/L in January 2014.*

*In 2009, well RHMW05 was installed downgradient from RHMW01 between the Red Hill tanks and the end of the infiltration shaft for U.S. Navy well 2254-01.*

*Groundwater samples collected from wells RHMW01, RHMW03, and RHMW05 have contained concentrations of TPH-DRO above DOH EALs, but below the site-specific risk-based level that was developed in 2007. In RHMW05, TPH-DRO concentrations have been below DOH EALs or non-detect since April 2010.*

#### 1.7.2.3 Soil Vapor Sample Results

As part of the SI, a soil vapor pilot study was conducted in which soil vapor monitoring points (SVMPs) were constructed within the slant borings beneath seven of the 12.5-Mgal USTs. Although results from the first SVMP sampling events indicated soil gas concentrations were less than *DOH* EALs protective of worker health at the Facility, the range in concentrations and chemicals detected indicated:

1. Soil vapor beneath the USTs contains petroleum-related compounds;
2. SVMPs could be used to sample for these volatile chemicals;
3. SVMPs sample results identified potential release areas beneath the USTs where petroleum concentrations in soil gas were elevated, compared to concentrations indicative of ambient conditions beneath the USTs.

Based on these results, SVMPs *were installed* beneath Tanks *2 through 18, and 20.*

### 1.7.3 Comprehensive Conceptual Site Model

A CSM was developed for the Facility in accordance with the USEPA's Risk Assessment Guidance for Superfund (USEPA, 1988, 1991). The CSM provides a framework for evaluating sources, potential exposure pathways, and receptors.

The current CSM is based on the recent investigation of the Facility (TEC, 2007). The CSM illustrates the migration pathways of potential concern for this Groundwater Protection Plan. Potential receptors include persons utilizing the basal groundwater. Migration pathways are described below:

- Vertical movement through basalt to basal groundwater;
- Movement in basal groundwater to downgradient potable water wells; and
- Expected isolation of the Red Hill groundwater basin from HBWS wells (Halawa Shaft well 2354-01 and Moanalua *wells 2153*-10, -11, and -12) due to the depth of the North Halawa Valley and Moanalua Valley fills.

#### 1.7.3.1 Groundwater Usage

The Facility is located up-gradient of the Hawaii State Underground Injection Control Line (UIC), which separates potable from non-potable groundwater. The nearest public drinking water well (HBWS Halawa Shaft well 2354-01) is located hydraulically cross-gradient of the site. This drinking water well is approximately 5,000 feet to the northwest of the Facility and pumps water from the basal aquifer. On average, 11.8 mgd are withdrawn from this location. This well is part of a water system that serves *more than 600,000* people on Oahu and this particular well supplies approximately 12% of the water to that system.

The U.S. Navy well 2254-01 is located near the site. This well is approximately 3,000 feet to the west of the site and is potentially down-gradient from the Facility. Between *2.4 and 4.4* mgd are withdrawn from this location. The U.S. Navy well 2254-01 currently provides potable water to the *JBPHHWS*, which serves approximately *65,230* military consumers.

#### 1.7.3.2 Contaminant Fate and Transport and Groundwater Modeling

TEC, the University of Hawaii at Manoa (UH) and NAVFAC Hawaii collaborated on development of a local 3-D finite difference model based on an existing MODFLOW regional groundwater model developed by the UH for *DOH* Safe Drinking Water Branch (SDWB) Source Water Assessment Program (SWAP). The localized model focused on modeling the contacts for local valley fills in the saturated zone because several important municipal water supply wells lie within a mile of the Facility, but on opposite sides of these low-flow barriers from the Facility. Once the model was developed, a pumping test was performed using the U.S. Navy well 2254-01 as the drawdown well, and monitoring points north of the Halawa Valley fill, south of the Moanalua Valley fill, and within the Red Hill ridge zone (unaffected by valley fills). The pumping test results were simulated using the 3-D flow model to calibrate the transient state of the model with reasonable precision.

Contaminant transport simulations were conducted using MODPATH to evaluate conservative particle transport, and RT3D (Clement, 1997), a high level transport model that accounts for all major transport processes, including advection, diffusion, dispersion, decay and sorption. The objective was to estimate the dissolved concentrations at the Facility monitoring wells that would

result in exceedances at the nearby municipal water supply wells. Simulations were run under an average pumping scenario, in which area supply wells were pumped at average pumping rates for the period of 1996 to 2005. In addition, once the critical concentrations within the Facility were estimated, a drought condition was simulated in which the U.S. Navy well 2254-01 was pumped at maximum rates to determine the worst case scenario, and sensitivity of the system to pumping conditions.

An important factor in evaluating the risk of a fuel release from the Facility is the type of fuel that is stored in the USTs. Although AVGAS and MOGAS were stored at the Facility between 1964 and 1969 in two tanks, since then, JP-5 and JP-8 have been the on-site fuels with the most potential to impact human health and the environment. JP-5 and JP-8 are jet propellants, similar to kerosene, with a total solubility of about 4.5 mg/L, very low concentrations of benzene, toluene, ethylbenzene, and xylenes (BTEX), and an effective solubility of benzene of approximately 0.75 mg/L. Although polynuclear aromatic hydrocarbons (PAHs) make up a small component of jet fuels, they are significantly less mobile than BTEX and not risk drivers for migration in the dissolved phase for this reason. Naphthalene, a mobile PAH common in JP-5, has an effective solubility of 0.25 mg/L, much less than TPH and benzene. Other fuels stored are diesel and less soluble NSFO types.

The results of the modeling, using TPH and benzene as the surrogate risk drivers showed that:

- Simulation of maximum concentrations in infiltrating groundwater through a contaminated vadose zone did not present a risk at adjacent drinking water wells;
- Valley fills represented by North Halawa Valley and Moanalua Valley are effective barriers to particle migration from the Facility to HBWS wells that lie outside these valley fills (HBWS Halawa Shaft, and HBWS Moanalua wells);
- Simulations in which fuel as light non-aqueous phase liquid (LNAPL) extended downgradient of monitoring well (RHMW01) showed concentrations that exceeded action levels at the infiltration gallery for U.S. Navy well 2254-01;
- Site-Specific, Risk Based Levels (SSRBLs) at RHMW01, RHMW02, RHMW03*, and RHMW05* coincide with solubility limits of JP-5, where benzene is 0.75 mg/L and TPH is 4.5 mg/L; and
- Groundwater action levels at the U.S. Navy well 2254-01 are the *DOH* drinking water EALs.

#### 1.7.3.3 Risk Summary

Current and future ecological risk is considered negligible because the Facility is underground and the migration pathway to ground surface or surface water via seeps is not complete.

The human health risk assessment was conducted assuming that future storage will remain JP-5 (kerosene) and heavier fuel mixtures. If lighter fuels, such as AVGAS or MOGAS were to be

stored at the Facility in the future, risks due to volatilization would need to be reconsidered. Under the JP-5 and heavier assumption, the following determinations were made:

- The current and future risk of exposure via migration from soil gas to indoor air is considered negligible.
- The primary environmental risks at the Facility were determined to be due to a future scenario in which groundwater from beneath the site was extracted for residential *tap water* use, including drinking. Currently, no extraction wells lie in the vicinity of the current groundwater plume.
- In addition, if a future release produced a large secondary source of LNAPL on the water table, dissolved contaminants or free-product may result in unacceptable concentrations of petroleum in the Red Hill sub-basin, which feeds into the U.S. Navy well 2254-01 potable water system, decreasing the amount of potable water available to *JBPHHWS* consumers by *2.4 mgd to 4.4* mgd.

# 2 APPLICABLE REGULATIONS AND GUIDANCE

Based on the current knowledge of the Facility and the CSM provided in Section 1, the Federal and state regulatory requirements and guidelines that apply to the Facility include those relating to drinking water and potable water systems; environmental response and contingency plans; and USTs. They are described in the paragraphs below.

## 2.1 Federal Regulations and Guidance

### 2.1.1 Drinking Water and Potable Water Systems

The National Primary Drinking Water (NPDW) regulations at 40 Code of Federal Regulations (CFR) Part 141 carries out provisions of the USEPA SDWA. They establish maximum contaminant levels (MCLs) for various substances in potable water.

### 2.1.2 USTs

The Resource Conservation and Recovery Act (RCRA), established in 1979 and amended with the Hazardous and Solid Waste Amendments of 1984, established a comprehensive regulatory program for USTs.

Most of the regulations concerning USTs are contained in 40 CFR Part 280 and 40 CFR Part 281, although codification of individual state and territorial programs is found in 40 CFR Parts 282.50-282.105. The list of hazardous substances is in 40 CFR Part 302.4.

#### 2.1.2.1 Regulations Applicable to the Facility

Regulations for USTs are found at 40 CFR PART 280—TECHNICAL STANDARDS AND CORRECTIVE ACTION REQUIREMENTS FOR OWNERS AND OPERATORS OF UNDERGROUND STORAGE TANKS (UST). Part 280 contains numerous subparts. Part 280.10(c)(5) states that parts B, C, D, E, and G are deferred and do not apply to UST systems with field-constructed tanks (which is the case for the Facility). The complete list of subparts is listed below with those applicable to the Facility underlined:

- <u>Subpart A - 280.10-280.12 - "Program Scope and Interim Prohibition"</u>
- Subpart B - 280.20-280.22 - "UST Systems: Design, Construction, Installation and Notification"
- Subpart C - 280.30-280.34 - "General Operating Requirements"
- Subpart D - 280.40-280.45 - "Release Detection"
- Subpart E - 280.50-280.53 - "Release Reporting, Investigation, and Confirmation"
- <u>Subpart F - 280.60-280.67 - "Release Response and Corrective Action for UST Systems Containing Petroleum or Hazardous Substances"</u>
- Subpart G - 280.70-280.74 - "Out-of-Service UST Systems and Closure"
- <u>Subpart H - 280.90-280.116 - "Financial Responsibility"</u>

- Subpart I - 280.200-280.230 - "Lender Liability"

Subpart F does apply; sections in this subpart are:

- § 280.61 Initial response.
- § 280.62 Initial abatement measures and site check.
- § 280.63 Initial site characterization.
- § 280.64 Free product removal.
- § 280.65 Investigations for soil and ground-water cleanup.
- § 280.66 Corrective action plan (CAP).
- 280.67 Public participation. (required only if a CAP is required)

The CAP section § 280.66(a) states "At any point after reviewing the information submitted in compliance with §§ 280.61 through 280.63, the implementing agency may require owners and operators to submit additional information or to develop and submit a corrective action plan for responding to contaminated soils and ground water. If a plan is required, owners and operators must submit the plan according to a schedule and format established by the implementing agency."

#### 2.1.2.2 Regulations "To Be Considered" at the Facility

Certain regulations do not apply specifically to the Facility, but do have performance criteria that were considered in the preparation of this Groundwater Protection Plan. These parts are described below.

Subpart D (Release Detection) § 280.40 General requirements for all UST systems

(a) Owners and operators of new and existing UST systems must provide a method, or combination of methods, for release detection that:

(1) Can detect a release from any portion of the tank and the connected underground piping that routinely contains product;

(2) Is installed, calibrated, operated, and maintained in accordance with the manufacturer's instructions, including routine maintenance and service checks for operability or running condition; and

(3) Meets the performance requirements in § 280.43 or 280.44, with any performance claims and their manner of determination described in writing by the equipment manufacturer or installer. In addition, methods used after the date shown in the following table corresponding with the specified method except for methods permanently installed prior to that date, must be capable of detecting the leak rate or quantity specified for that method in the corresponding section of the rule (also shown in the table) with a probability of detection (PD) of 0.95 and a probability of false alarm (Pfa) of 0.05.

Subpart D (Release Detection) § 280.43 Methods of release detection for tanks

(a) Inventory control. Product inventory control (or another test of equivalent performance) must be conducted monthly to detect a release of at least 1.0 percent of flow-through plus 130 gallons on a monthly basis in the following manner.

(d) Automatic tank gauging (ATG). Equipment for automatic tank gauging that tests for the loss of product and conducts inventory control must meet the following requirements:

(1) The automatic product level monitor test can detect a 0.2 gallon per hour leak rate from any portion of the tank that routinely contains product; and

(2) Inventory control (or another test of equivalent performance) is conducted in accordance with the requirements of § 280.43.

(h) Other methods. Any other type of release detection method, or combination of methods, can be used if:

(1) It can detect a 0.2 gallon per hour leak rate or a release of 150 gallons within a month with a probability of detection (PD) of 0.95 and a probability of false alarm (PFA) of 0.05; or

(2) The implementing agency may approve another method if the owner and operator can demonstrate that the method can detect a release as effectively as any of the methods allowed in paragraphs (c) through (h) of this section. In comparing methods, the implementing agency shall consider the size.

## 2.2 Hawaii Regulations and Guidance

### 2.2.1 Drinking Water and Potable Water System Regulations

The *DOH* Rules Relating to Hawaii Potable Water Systems (HPWS) (Hawaii Administrative Rules [HAR] Title 11, Chapter 20) set forth MCLs of certain chemicals in public and private drinking water systems. These MCLs are analogous to the NPDW regulations but additional substances are regulated.

### 2.2.2 Hawaii Environmental Response Law and State Contingency Plan Regulations

The Hawaii Revised Statutes Title 19, Chapter 128D and SCP (HAR Title 11, Chapter 451) is intended to identify releases and other situations that may endanger public health or welfare, the environment, or natural resources; prescribe notification requirements; and establish methods to address such releases. The SCP is intended to address contaminants and releases not addressed by other State of Hawaii Laws and Rules. It establishes reportable quantities for hazardous substances, pollutants, and contaminants for release purposes. The HERL definition of a hazardous substance includes petroleum. Methods and criteria for investigations and response actions conducted under the SCP are described in the *DOH Office of Hazard Evaluation and Emergency Response (HEER)* technical guidance manual (TGM) for the Implementation of the Hawaii State Contingency Plan (*DOH, 2009) hereafter referred to as the DOH-HEER TGM.*

The *DOH-HEER* TGM *describes a three-stage process to* determine whether further action is necessary for a site:

*Site Investigation - determine the extent and magnitude of contamination;*

*Environmental Hazard Evaluation - determine the presence or absence of potential environmental hazards;*

*Response Action - determine appropriate actions to address the identified hazards.*

*The DOH-HEER TGM indicates that the DOH "Tier 1 EALs may be used to identify contaminants above levels of potential concern. The investigation of contaminants below the EALs is generally not necessary."*

### 2.2.3 UST Regulations

The State of Hawaii adopted its own UST statutes and regulations (Hawaii Revised Statutes, Title 19, Chapter 342L and HAR, Title 11, Chapter 281, Subchapters 1 through 10) to implement these laws in Hawaii. Owners and operators of USTs that contain regulated substances such as petroleum are required to take specific actions when investigating releases from their USTs. Regulations and requirements are explained in detail in the *Technical Guidance Manual for Underground Storage Tank Closure and Release Response,* (DOH, 2000), hereafter referred to as the DOH-UST TGM*, and the Evaluation of Environmental Hazards at Sites with Contaminated Soil and Groundwater (DOH, 2011 revised January 2012), hereafter referred to as the DOH-HEER EHE Guidance.*

*A cross reference table for the requirements of EHEs as specified in the DOH-HEER EHE Guidance is provided in Appendix F.*

## 2.3 Non-Regulatory Guidance on Release Detection To Be Considered for the Facility

Two important factors that must be taken into account in providing release detection at the Facility are given below.

*1.* Each UST in the Facility is field-constructed and has dome-shaped ends which are atypical for fuel tanks of this size. The large volume associated with each tank requires high resolution detectors to assess small changes in level, temperature and pressure. Algorithms for evaluating fuel movement must account for the atypical design. *These are also the only fuel tanks in the world with a fuel height of in excess of 200 feet. Accurate detection of this fuel height is still the largest hurdle that industry has not fully addressed.*

2. The USTs within the Facility are interconnected with each other and with other facilities in Pearl Harbor. Fuel *level change within the tank* may be due to:

   - *Fuel inflow or outflow, which should be accounted for via inventory management;*
   - *Fuel remaining in a fuel pipeline, but leaking by a closed valve in the pipeline;*

- *Fuel temperature changes;*
- *Increase in water within a tank from condensation of humid air;*
- *Removal of water from within the tank;*
- *Removal of fuel samples from the tank for fuel quality testing; and/or*
- *An actual fuel leak from the tank*

Procedures to account for these factors are not part of standard USEPA testing protocol for UST leak detection systems, which evaluate individual tanks. Guidance for certification is available for alternative testing methods for bulk field constructed tanks. In addition, differentiating chronic leaks from other fuel movement or other systemic sources require analysis of trends from multiple sensors and *fuel operations personnel.* In this regard, *NAVSUP FLC PH* will evaluate unexplained fuel movement and determine whether a leak is occurring.

### 2.3.1 Alternative Leak Detection Methods for Bulk Field Constructed Tanks

There are several reasons why an alternative method is often required for bulk field constructed tanks.

1. Some release detection systems cannot be evaluated using the procedures described in the EPA Standard Methods for Evaluating Leak Detection Methods.
2. For some types of equipment, there is no EPA protocol available.
3. The cost to conduct the EPA Standard Method may be cost-prohibitive for some Fuel Storage Systems.

The following systems have been tested at the Red Hill Facility to date.

- Asteroid Corporation has tested their Comet system.
- The Low Range Differential Pressure (LRDP) system developed by Naval Facilities Engineering Service Center (NFESC) was tested in a single tank configuration by a third-party certifier (Ken Wilcox Associates [KWA], 2002). The general protocol for these single tank configuration tests have followed *Alternative Test Procedures For Evaluating Leak Detection Methods: For Bulk Field-constructed Tanks*, KWA, revised November 2000. This document is available at:

*http://www.kwaleak.com/protocols/KWA_Bulk_Tank_Protocol_11_28_00_fonts_fixed.pdf*.

- As part of an overall management system to evaluate fuel movement at the Pearl Harbor fuel storage and transmission facilities, Asteroid Corporation developed the concept of a Fuel Integrity Management Program (FIMP) with two major parts; Tank Integrity Management Program (TIMP) and Pipeline Integrity Management Program (PIMP). FIMP is a schematic description of a comprehensive release detection program for pipelines and tanks throughout the Pearl Harbor integrated fuel system.

- *The Mass Technology Corporation Precision Mass Measurement System was tested on two tanks in March 2008.*

*Fifteen tanks were subjected to leak tests and passed the tests in March 2009, February 2011 and March 2013. The leak tests utilized Mass Technology Corporation Precision Mass Measurement Systems equipment and the manufacturer's protocol for a 72-hour test. The testing time was extended to more than 160 hours due to the unusual height of the tank. According to the manufacturer, the test equipment and protocol has a minimum leak detection rate of 0.7 gallons per hour with a probability of detection of 95 percent and a probability of false alarm of 5 percent. The next test is scheduled to occur in 2015.*

The U.S. Navy is *continuing to evaluate leak detection* methods in an effort to develop a viable leak detection system at the Facility.

## 2.4 Regulatory History of the Facility

*A* chronological listing of regulatory issues and documents regarding the Facility UST petroleum releases *is provided in Appendix A. Copies of these documents are maintained by the DOH Solid and Hazardous Waste Branch UST Section.*

# 3 TANK PREVENTIVE MAINTENANCE AND LEAK MONITORING PROGRAM

The Facility overlies a very valuable groundwater resource that produces between *2.4 and 4.4* mgd of potable water for the *JBPHHWS* and its military consumers via U.S. Navy well 2254-01. This water resource is virtually irreplaceable, considering the present limitations of the sustainable yield of the Pearl Harbor and Honolulu Aquifer Sectors, the available water, land, as well as construction costs for new sources.

A large release of petroleum LNAPL to groundwater from the Facility can eliminate the Red Hill sub-basin as a water resource to *JBPHHWS* via U.S. Navy well 2254-01. Currently there is no effective way to quickly determine whether a release is occurring. Groundwater samples are collected quarterly; a chronic release of 8 gallons per hour over a period of 90 days is approximately 17,280 gallons. Groundwater model simulations indicate that a release of this size has the potential to allow contaminated water to enter the infiltration gallery and contaminate the U.S. Navy well 2254-01 at concentrations greater than the MCL for benzene (TEC 2007). Such contamination would require the well to be withdrawn from domestic service until a treatment plant and associated by-pass water transmission system were put in place.

In order to mitigate the risk associated with future releases, the U.S. Navy *has*:

1. Implement*ed* a rigorous tank maintenance program, and
2. Continue*s* to research and investigate a viable leak detection system for the Facility. Deployment of a leak detection system is dependent on the suitability of available technologies and budget constraints.

Although the Facility USTs are deferred from many of the State and Federal regulations, including the requirement for release detection (HAR, Title 11, Chapter 281, Subchapter 5, "Release Detection") deployment of a reliable leak detection system would reduce the potential for a chronic release to the Red Hill sub-basin. The impact of a future chronic release of fuel over a prolonged period of time would:

1. Eliminate *2.4* mgd to *4.4* mgd of potable water from the *JBPHHWS*;
2. Be extremely difficult and costly to remediate in accordance with the *DOH* UST regulations (HAR, Title 11, Chapter 281, Subchapter 7, "Release Response"); and
3. Remove the Red Hill sub-basin as a source of potable water for an undetermined period of time.

Although there is currently a network of *four* groundwater monitoring wells within the Facility, these wells are only sampled every three months, and each monitors approximately 200,000 square feet of the water table beneath the Facility. A release from Tank 12 could potentially impact an area of the water table of 150,000 square feet before being intercepted at RHMW02 at Tank 6. For these reasons, it is clear that every effort must be made to ensure that these releases

do not occur, and this will be accomplished by instituting a rigorous maintenance schedule, and continuing the effort to identify and implement state-of-the-art release detection procedures.

## 3.1 Tank Maintenance and Repair Program

### 3.1.1 Tank Maintenance and Repair Histories

Data from modified API 653 Inspection Reports and existing written site histories *indicate there may have been several fuel releases from the tanks prior between 1943 and 1997.* In addition to actual leaks from the tanks, in some cases, reported leaks in histories were leaks into the tell-tale system piping itself (which are internal to the tank) and were not external tank leaks.

Based on various types of leak tests conducted since 1997, other releases may have occurred that are not reflected in the *written tank* histories. However, the accuracies of these tests are not known and in some cases leakage through gate valves *were* determined as the cause of unexplained changes in fuel levels. In 2004, gate valves on fuel lines were replaced with twin seal plug valves (double block bleed valves). These replacements are believed to have eliminated leaky valves as a factor to explain unexpected changes in fuel levels.

### 3.1.2 Tank Inspections and Repairs

To date, five tanks (Tanks *2, 6,* 15, 16, *and 20*) have been inspected and repaired in accordance with a modified protocol for USTs based on the API 653*, and five tanks (Tanks 4, 5, 14, 17, and 18) are funded and in various stages of execution*. API 653, Tank Inspection, Repair, Alteration and Reconstruction, is a maintenance and inspection program developed by the API to provide for an ongoing assessment of a facility's above ground storage tanks. This protocol was modified to be appropriate for USTs. API 653 provides minimum requirements for maintaining the integrity of welded steel storage tanks. It applies specifically to aboveground tanks, but the principles also apply to field-constructed underground tanks. *Tanks 9, 12, and 13 were cleaned, spot inspected, and repaired in 1995.* Tanks 7, 8, and 10 underwent *a partial* modified API 653 process and were completed in 1998. Tanks *6,* 15, and 16 underwent the *full* modified API 653 process and were completed early in 2007. *Tanks 2 and 20 underwent the full modified API 653 process and were completed in 2008.*

### 3.1.3 Current Status of the USTs

At the date of this *plan interim update*, *15* of the 20 tanks at the Facility are in operation. *Five* tanks (1, *5, 14, 17*, and 19) are currently out of service (Table 3-1). Tanks 1 and 19 have been taken out of service permanently. *The notification letter for closure of Tanks 1 and 19 is included in Appendix A.* Tank*s 5, 14, and 17 are* presently undergoing modified API 653 tank inspection procedure (Appendix B).

## 3.2 Current Petroleum Release Monitoring Systems

### 3.2.1 Soil Vapor Monitoring System

The soil vapor monitoring system (SVMS) is not an ATG system. *The* SVMS consists of two or more probes located at various points in existing boreholes beneath *the 18 active* Facility tanks. Each probe is used to draw vapor from isolated segments of the borehole associated with the front, middle, and back of the tanks. Vapors are withdrawn from each probe via a pump and sampled in the field using a hand-held organic compound detector. Total volatile organic vapors are measured down to 1 part per billion and compared to baseline measurements from the same location. Increasing concentrations over time are an indication of fuel leaks at the tested tank. The SVMPs can be monitored periodically (quarterly) or when data from the ATG leak detection system indicates a potentially leaking tank. All 20 tanks have horizontal borings underneath them from earlier investigations, therefore full scale implementation would require removal of the existing casing and SVMP installation in eleven additional boreholes (Tank 1 and Tank 19 are out of service indefinitely). Limitations of the SVMPs as currently designed are described below.

- Currently only one boring exists under each UST. Additional borings under each UST would increase the probability of detection by increasing the coverage.
- In the case of multiple releases from a single UST, vapors from a previous release may mask any new releases to some extent, especially if the releases affected the same SVMP. This limitation may be overcome by evaluating concentration trends, versus the positive detections of petroleum as an indication of a new release. Additional borings and multiple vapor monitoring points per borehole would increase the probability of detection of multiple releases from different locations in a UST.
- The remaining borings that have not been fitted are smaller in diameter and present technical difficulties in installation of the SVMPs with multiple monitoring points (MPs). Alternative installation procedures will be required.

### 3.2.2 Groundwater Monitoring at the Facility

Although a groundwater monitoring program is currently in place at the Facility, this program is not a viable leak detection method, since leaks can occur that are not observed at the monitoring wells. Its purpose is to evaluate groundwater quality under the Facility to determine whether contamination presents a risk to consumers of the water within the Red Hill sub-basin. In addition, the groundwater monitoring program will also provide "triggers" to the groundwater protection responses presented in Table 4-2. Petroleum in groundwater from each well can be inferred to have come from upgradient sections of the Facility; however, the objective of the leak detection program is to verify and correct any leakage before the drinking water resource is impacted in order to minimize the chance that the responses presented in Table 4-2 are required.

In the current configuration, *four* groundwater monitoring wells are in place within the lower access tunnel of the Facility.

- RHMW01 is at the southwest edge of the Facility, between Tank 1 and the U.S. Navy well 2254-01. RHMW01 is considered to be hydraulically downgradient from the USTs and will be the first point of detection for releases from Tanks 1 through 6.
- RHMW02 is upgradient of Tank 6, approximately 600 feet upgradient of RHMW01. It will be the first point of detection for Tanks 7 through 14.
- RHMW03 is upgradient of Tank 14, approximately 800 feet upgradient from RHMW02 and 600 feet downgradient from Tanks 19 and 20. It is the first point of detection for Tanks 15 through 20.
- *RHMW05 is located downgradient from RHMW01 between the Red Hill tanks and the end of the infiltration shaft for U.S. Navy well 2254-01.*

The current groundwater monitoring program consists of quarterly sampling events, and results generally take two to three weeks from the time of sample collection. While this is a very important part of the confirmation process, it does not provide timely information required for protection of the groundwater resource. A detailed groundwater monitoring program has been developed for the Facility. This program is described in Section 4 of this report and in Appendix C (*Long-Term* Groundwater *and Soil Vapor* Monitoring *Work Plan*/Sampling and Analysis Plan).

### 3.3 Ongoing Groundwater Protection Activities

1. Continue to conduct modified API 653 tank inspections and repairs for USTs (see proposed schedule in Table 3-1). This process is an extension of previous tank inspection and repair procedures that have been conducted to date. Tanks will continue to be inspected periodically at time intervals based on the results of the latest inspection (no greater than 20 years).
2. *Continue the soil* vapor monitoring program which currently includes all active Red Hill tanks. *Soil vapor monitoring has been conducted at least quarterly from March 2008 to the present. Continue to* coordinate vapor monitoring of *the tanks with* the well water monitoring cycle.
3. Continue quarterly groundwater monitoring of *four* wells within the Facility and the U.S. Navy well 2254-01 as required by the *DOH* Release Response Requirements.
4. *Continue tank integrity testing using the Mass Technology Corporation Precision Mass Measurement System.*
5. *Periodically* evaluate best available technologies for leak detection on large field constructed bulk fuel storage facilities, such as the Facility. This will be a multi-phased project involving both identification of available technologies and pilot testing of

potential candidate technologies. The initial step will consist of traditional research (internet, vendor specifications/literature, previous research studies, third party certification evaluations, etc.) to identify potential technologies. The study will evaluate systems based on applicability to the following Red Hill parameters:

- Proposed system leak detection sensitivity;
- Operational challenges;
- Relative costs; and
- Third party certifications.

6. Implement pilot studies of *leak detection* technologies that show promise on one or more of the tanks at Red Hill. Pilot testing will be done to evaluate the challenges associated with testing these tanks as well as the results versus cost to implement.

### 3.3.1 Reporting Tank Inspections, Leaks, and Releases to *DOH*

*The following information will* be provided to *DOH*:

1. Monitoring results from quarterly groundwater sampling.
2. Progress in developing a leak detection system for tank fluids and results from leak detection testing after the method is certified and accepted by *NAVSUP FLC PH*.
3. Any other information regarding leaks or groundwater contamination.
4. Notification that tanks were taken out-of-service (*DOH* Form 1).

Table 3-1. Tank Inspections and Scheduling

| Tank | Prior Years | FY06 | FY07 | FY08 | FY09 | FY10 | FY11 | *FY12* | *FY13* | *FY14* | *Future Years* |
|---|---|---|---|---|---|---|---|---|---|---|---|
| 1 | | RFS | | | | | | | | | |
| 2 | | | | | Comp | | | | | | |
| 3 | | | | | | | | | | | *TBD* |
| 4 | | | | | | | | *Sched* | *Sched* | *Sched* | *After Tank 5 Comp* |
| 5 | | | | | | *In Progress* | *In Progress* | *In Progress* | *In Progress* | *Warranty Work In Progress* | |
| 6 | | | Comp | | | | | | | | |
| 7 | *Partial* Comp FY98 | | | | | | | | | | |

| Table 3-1. Tank Inspections and Scheduling | | | | | | | | | | | |
|---|---|---|---|---|---|---|---|---|---|---|---|
| **Tank** | **Prior Years** | **FY06** | **FY07** | **FY08** | **FY09** | **FY10** | **FY11** | ***FY12*** | ***FY13*** | ***FY14*** | ***Future Years*** |
| 8 | *Partial* Comp FY98 | | | | | | | | | | |
| 9 | *Partial* Comp FY95 | | | | | | | | | | |
| 10 | *Partial* Comp FY98 | | | | | | | | | | |
| 11 | | | | | | | | | | | *TBD* |
| 12 | *Partial Comp FY95* | | | | | | | | | | *TBD* |
| 13 | *Partial Comp FY95* | | | | | | | | | | *TBD* |
| 14 | *Partial Comp FY95* | | | | | | | *Taken Down July 2012* | *Sched* | *Sched* | *Tank 5 Dependent* |
| 15 | | Comp | | | | | | | | | *TBD* |
| 16 | | Comp | | | | | | | | | *TBD* |
| 17 | | | | | | *In Progress* | *In Progress* | *In Progress* | *In Progress* | *In Progress* | *Tank 5 Dependent* |
| 18 | | | | | | | | | | | *TBD* |
| 19 | | | RFS | | | | | | | | |
| 20 | | | | | | Comp | | | | | |

*Notes:*

1. RFS – Removed from Service (*DOH* Form 1 submitted)
2. *Comp: Completed*
3. *Sched: Scheduled*
4. *TBD: To Be Determined*
5. *Schedule is based on performing modified API 653 inspection and repair on two tanks per two to three years based on funding and contracting limitations.*
6. Schedule may be changed based on the needs of the U.S. Navy.

# 4 GROUNDWATER MONITORING PROGRAM, EVALUATION OF RESULTS, AND RESPONSE ACTIONS

## 4.1 Groundwater Monitoring Program

### 4.1.1 Regulatory Requirements

The *DOH* October 10, 2003 letter specified quarterly groundwater monitoring for the Facility and specific analytical requirements as follows.

- For the monitoring wells within the Facility tunnels, the *DOH* recommended quarterly monitoring for the following chemical constituents: BTEX, methyl tert butyl ether (MtBE), benzo(a)pyrene, acenaphthene, fluoranthene, naphthalene, and total lead.
- For the U.S. Navy well 2254-01, the *DOH* recommended quarterly monitoring for the following chemical constituents: BTEX, MtBE, benzo(a)pyrene, acenaphthene, fluoranthene, naphthalene, and dissolved lead.
- In addition, the *DOH* requested a written description of the method of collection for drinking water samples at the U.S. Navy well 2254-01.

Since 2003, *DOH* has published guidance that contains additional compounds of concern in groundwater investigations (*DOH* EALs). To comply with the older requirements and recommendations as well as the new guidance, the Navy has implemented a groundwater monitoring system that is described in the following subsections and detailed in Appendix C.

### 4.1.2 Groundwater Monitoring Network

The current monitoring system consists of *four* wells, which partition the Facility into three segments:

- RHMW01 will monitor releases from Tank 1 through Tank 6, the southern extent of the Facility (Zone 1);
- RHMW02 will monitor releases from Tank 7 through Tank 14, the middle of the Facility (Zone 2); and
- RHMW03 will monitor releases from Tank 15 through Tank 20, the northern extent of the Facility (Zone 3).
- *RHMW05 will provide an intermediate location between the Red Hill drinking water shaft and the southern extent of fuel tanks.*

The width of each zone is approximately 300 feet, consisting of a cross section of the tunnel and adjacent tanks. Zones 1, 2, and 3 are approximately 500 feet long, 700 feet long and 500 feet long, respectively. Because of the length of each zone, if releases occur at the furthest point from the well in each zone, the plume size could be 700 feet long before it is observed in the associated monitoring well. A chronic release may not be detected for some time under these circumstances, potentially resulting in a large plume of fuel on the water table. For this reason,

the U.S. Navy will evaluate additional leak detection systems so that chronic releases may be detected in a timelier manner.

### 4.1.3 Groundwater Sampling and Analysis Protocol

The sampling and analysis will be conducted in accordance with the Sampling and Analysis Plan (SAP) (Appendix C). The SAP contains sampling and analytical details, which are summarized here. The sampling will be performed quarterly *at* wells RHMW01, RHMW02, RHMW03, *RHMW05, HDMW2253-03, and OWDFMW01,* and at *sampling point* RHMW2254-01 (U.S. Navy well 2254-01). At a minimum, the following chemicals will be monitored:

- *TPH-DRO, TPH-GRO, VOCs, PAHs*, and dissolved lead.

Analytical methods will conform to SW846 solid waste groundwater testing protocol, including:

- Method 8260*B* for VOCs;
- Method 8270*C* SIM for PAHs;
- Method 8015*B* for TPH-DRO and *Method 8260B for* TPH-GRO; and
- Method *6020* for dissolved lead.

Reporting limits for the chemicals monitored will be below the *DOH* EALs (*DOH*, *2008*). The environmental laboratory that conducts analyses described above will be accredited by the National Environmental Laboratory Accreditation Conference (NELAC).

## 4.2 Groundwater Analytical Results

*G*roundwater analytical results will be provided in electronic format, as an Excel database or similar formatted database output. An example of the formatted analytical results is provided in Appendix D. An example Table of Contents for the analytical laboratory report is also included in Appendix D. The U.S. Navy will store and maintain these data sets while the Facility is an active fuel storage facility.

Concentration trends will be evaluated for each chemical or mixture (such as TPH) that exceeds the Tier 1 action levels for drinking water or *DOH* drinking water EALs.

The U.S. Navy will submit quarterly to the *DOH* UST Division:

- The analytical laboratory report;
- A *table of* analytical results summarizing for each well sampled: each tested chemical, the analytical result, the method detection limit, the reporting limit, any data qualifier, the date of sample collection, and a comparison to *DOH* drinking water EALs; and
- A trend analysis of each chemical or mixture that exceeds *DOH* drinking water EALs.

## 4.3 Groundwater Action Levels

Action levels used for decisions at the Facility will include general *DOH* EALs (*DOH 2008*) for groundwater protection and SSRBLs for TPH and benzene. Through modeling it was determined that TPH and benzene are the risk drivers for migration of dissolved petroleum from jet fuel. SSRBLs were selected based on a Tier 3 Risk Assessment (TEC, 2007) and are valid at RHMW01, RHMW02, RHMW03, and *RHMW05*. For the protection of the U.S. Navy well 2254-01, the approach used was to select an exposure point concentration (EPC) at the U.S. Navy well 2254-01 that is acceptable based on risk considerations and then use fate and transport models to determine what monitoring point concentration would result in that EPC. The acceptable EPC concentrations at U.S. Navy well 2254-01, are the *DOH* EALs. These EALs are listed in Table 4-1.

The SSRBLs are based on results from fate and transport modeling for petroleum (based on a JP-5 product) from the Facility to receptors (see Section 1.7.3.3 for the summary). Table 4-1 identifies the SSRBLs based on fate and transport results and risk assessment.

Table 4-1. Action Levels

| Chemical | EAL (µg/L) | SSRBL (µg/L) |
|---|---|---|
| **Volatiles** | | |
| Benzene | 5 | 750 |
| Ethylbenzene | 700 | NA |
| Methyl Tert Butyl Ether | *12* | NA |
| Toluene | 1,000 | NA |
| Xylenes | 10,000 | NA |
| **Semi-volatiles** | | |
| Acenaphthene | *370* | NA |
| Benzo(a)pyrene | 0.2 | NA |
| Fluoranthene | *1,500* | NA |
| Naphthalene | *17* | NA |
| **Lead** | | |
| Total | Not set | Not set |
| Dissolved | 15 | NA |
| **Other** | | |
| TPH *(gasoline range)* | 100 | *NA* |
| *TPH (diesel range)* | *100* | *4,500* |

NA – Not applicable or not determined
SSRBLs are applicable at RHMW01, RHMW02, RHMW03, and *RHMW05*
EALs are applicable at U.S. Navy well 2254-01

The actions to be taken for exceedances at specific wells and for specific categories are listed in Table 4-2. These actions are dependent on the concentration of a compound at a specific well related to EALs and SSRBLs and groundwater concentration trends.

| Table 4-2. Responses to Groundwater Monitoring Results | | | |
|---|---|---|---|
| **Results Category** | **RHMW02, RHMW03, or RHMW05** | **RHMW01** | **U.S. Navy Pumping Well 2254-01** |
| Results Category 1: Result above detection limit but below drinking water EAL and trend for all compounds stable or decreasing | A | A | A,D,M,E |
| Results Category 2: Trend for any compound increasing or drinking water EAL exceeded | A, B | A, B | A,B,C,D,E,F,G,K, L,O |
| Results Category 3: Result Between 1/10X SSRBL and SSRBL for benzene, or between 1/2X SSRBL and SSRBL for TPH | A,B,G,H,I,J | A,B,E,G,H,I,J | A,B,C,D,E,F,G,I,J, K,L,O |
| Results Category 4: Result Exceeding any SSRBL or petroleum product measured or observed | A,C,D,E,F,I,J, K,M,N | A,C,D,E,F,I, J,K,M,N,O | A,C,D,E,F,G,I,J,K, L,O |

Specific Responses:
A. Send quarterly reports to *DOH*
B. Begin program to determine the source of leak
C. Notify *DOH* verbally within 1 day and follow with written notification in 30 days
D. Notify *NAVSUP FLC PH* Chain of Command within 1 day
E. Send Type 1 Report (see box below) to *DOH*
F. Send Type 2 Report (see box below) to *DOH*
G. Increase monitoring frequency to once per month (if concentrations increasing)
H. Notify *DOH* verbally within 7 days and follow with written notification in 30 days
I. Remove sampling pumps (see Appendix C), measure product in pertinent wells with interface probe, re-install pumps if product is not detected.
J. Immediately evaluate tanks for leaks
K. Collect samples from nearby Halawa Deep Monitoring Well (2253-03) and OWDF MW01
For permission to sample 2253-03, call DLNR Commission on Water Resource Management (808) 587-0214, DLNR.CWRM@Hawaii.gov
L. Provide alternative water source at 2254-01
M. Prepare for alternative water source at U.S. Navy Well 2254-01
N. Re-measure for product every month with reports to *DOH*
O. Install additional monitoring well downgradient

**Report Types**

*DOH* Type 1 Report

- Re-evaluate Tier 3 Risk Assessment/groundwater model results
- Proposal to *DOH* on a course of action

*DOH* Type 2 Report

- Proposal for groundwater treatment

If an anomalous result is suspected, the Navy may immediately resample a well or may have results validated by a third party before these results are accepted. These will be completed within 30 days from receipt of the original result.

## 4.4 Responsibilities

Navy Region Hawaii, Regional Environmental Department has the ultimate responsibility for implementation of this plan, including reporting to *DOH*. Other responsibilities are shown in Table 4-3.

| Table 4-3. Navy Chain of Command and Responsibilities for Implementing the Groundwater Protection Plan | | | |
|---|---|---|---|
| **Name** | **Day Phone** | **24-Hour Phone** | **Role** |
| Compliance Division, Navy Region Hawaii Environmental Department | 471-1171 | | Official Correspondence with *DOH*; ultimate responsibility for implementation of this Groundwater Protection Plan; *prepares monthly reports and other reports; verbal notifications to DOH and follow-up written notification* |
| *NAVSUP FLC PH Fuel Department Director* | *473-7833* | 690-0115 | *Supports implementation of* this Groundwater Protection Plan; coordinates leak detection testing and implementation; determines when a leak should be reported; *coordinates tank inspections* |
| *NAVFAC HI Environmental* | | | Arranges and coordinates quarterly groundwater sampling, |
| C703 Fuel Operations Foremen | 473-7805 | 479-1063 | Reports releases or problems |
| Underground Pump-house Dispatcher | 471-8081 | 471-8081 | Facility Emergency Coordinator |
| NAVFAC *Hawaii Utilities and Energy Management, Water Commodity Manager* | 473-*0388* | | Manages the *JBPHH* Water System; responsible for activities associated with U.S. Navy well 2254-01 |
| Navy On-Scene Coordinator Navy Region Hawaii Environmental Department | 473-4689 | | Responsible for clean up activities associated with the Pearl Harbor Oil and Hazardous Substance Groundwater Protection Plan, Facilities Response Plan and leads the Spill Management Team |

# 5 CONTINGENCIES FOR CONTAMINATION OF POTABLE WATER

The results of groundwater modeling indicate that a large petroleum release from the Facility to the underlying basal drinking water table has the potential to contaminate the U.S. Navy well 2254-01 (TEC, 2007). If this were to occur, the possible actions to ensure protection of human health would include one or a combination of the following: using alternative water sources, treatment of water pumped from the well, and/or water rationing. This section is provided as a conceptual overview of the issues and a limited number of alternatives. In the hypothetical future scenario where remediation of the basal aquifer is required, an emergency remedial alternatives analysis and engineering feasibility study and design would be conducted before implementation.

## 5.1 Potential Alternative Sources of Potable Water

The current configuration of the *JBPHHWS* (which includes U.S. Navy well 2254-01) is shown in Figure 5-1 and details are specified in Tables 5-1 and 5-2. If the U.S. Navy Pumping well 2254-01 well became contaminated, a reduction in service would occur. The current demand of the *JBPHHWS* fluctuates between *12* mgd in the winter to a maximum of approximately *22* mgd during limited periods in the summer months, supplied by the U.S. Navy well 2254-01 (*Red Hill Shaft*), Waiawa Shaft, and Halawa Shaft. During the summer months, U.S. Navy well 2254-01 provides as much as *4.4* mgd. While the HBWS has interconnecting piping from the HBWS Halawa Shaft (2354-01), these are low volume connections and could not replace the loss from Red Hill. Over-pumping from any of these wells, and especially the U.S. Navy Halawa Shaft will result in saltwater up-coning and intrusion that is unacceptable for these freshwater sources.

Tables 5-1 and 5-2 provide summary information, including theoretical pumping capacities for the *JBPHHWS* wells.

## 5.2 Water Treatment Options

In the case where an inadvertent fuel release from the Facility to the water table occurred that is large enough to impact the quality of the water produced at the U.S. Navy well 2254-01, cleanup can be expected to take decades or more. As such, a water treatment facility may be required to remove the contaminants at the wellhead, as well as in situ groundwater treatment technologies to remove the contaminants from the groundwater resource. Wellhead treatment facilities should be designed to allow treatment of approximately 16 mgd at the U.S. Navy well 2254-01.

In the event that groundwater concentrations become unacceptable and a response requires groundwater treatment, the potential treatment options for the Facility are briefly described here.

| Table 5-1. Summary of *Joint Base Pearl Harbor-Hickam* Water System | |
|---|---|
| **Water System Name** | *Joint Base Pearl Harbor*-Hickam Water System , Pearl Harbor, Oahu, HI 96860 |
| **Water System Operator Phone Number** | 808-473-0388 |
| **Water System Identification Number** | PWS 360 |
| **Location (City/Town)** | Pearl Harbor |
| **Population Served from EPA Records** | *65,230* people |
| **Water Source Type** | Groundwater |
| **Water Source Information** | Waiawa Shaft, Halawa Shaft, and *Red Hill Shaft* (U.S. Navy well 2254-01) |
| **Water Pumping Information** | Halawa, Red Hill, Manana, *NFH Boneyard*, and Moanalua *Terrace* Booster Pumps |
| **Water Storage Information** | Halawa Storage Tanks, Red Hill Storage Tank, and Camp Smith Storage Tanks |
| **Water Treatment Information** | NaOCl for chlorine disinfection and NaF for fluoridation |
| **Water System Demand** | Average Day Demand *ranges from about 12* million gallons per day (MGD) *during winter months to about 22 MGD during summer months* |

Source: Pearl Harbor Water System Emergency Response Plan (Earth Tech, 2005); *updated August 2014*

| Table 5-2. Summary of Joint Base Pearl Harbor-Hickam Water System Components | | | |
|---|---|---|---|
| **Component** | **Facility** | **Capacity** | **Notes** |
| Waiawa Shaft | S-71 | 18 MGD maximum production capacity | *3* pumps rated at *6000* gpm each *and 1 pump rated at 6500 gpm* |
| Halawa Shaft | 1/487 | 5 MGD maximum production capacity | *1 pump rated at 3,200 gpm* |
| U.S. Navy Well 2254-01 (*Red Hill Shaft*) | S-307 | 16 MGD maximum production capacity | *4* pumps rated at 6500 gpm each |
| Red Hill Booster Pumps | S-307 | 2 pumps rated at 500 gpm each | Transfer to Red Hill storage tank |
| Halawa Booster Pumps | S-5 | 2 pumps rated at 500 gpm each | Transfer to Camp Smith storage tanks |
| Manana Booster Pumps | 817 | *2 pumps rated at 225 gpm each* | Transfer of water *and fire protection* to Manana Housing |
| *NFH Boneyard Booster Pumps* | 2450 | 2 pumps rated at 130 gpm each | *Supplemental booster pumping to higher elevation homes in* Moanalua *Terrace* Housing |
| Moanalua *Terrace* Booster Pumps | 7001 | 2 pumps rated at 875 gpm each and 1 pump rated at 250 gpm | Transfer of water *and fire protection* to Moanalua *Terrace* Housing |

Source: Pearl Harbor Water System Emergency Response Plan (Earth Tech, 2005); *updated August 2014*

Based on the treatment technologies screening matrix (FRTR, 2007; see Appendix E) and an analysis of site-specific conditions, the treatment technologies most likely to be feasible are described further.

### 5.2.1 Summary of Potable Water Treatment Facility Technologies

*In 2010, the U.S. Navy developed an engineering cost estimate for a water purification facility for the U.S. Navy well 2254-01 (Red Hill Shaft) to remove organic contaminants associated with fuel. This information is summarized in the Final Report, Evaluate Treatment Technologies for the Red Hill Drinking Water Well, August 2010. The treatment plant consisted of a transfer pump station, a treatment facility with air-stripping towers and two-stage granular activated carbon treatment units, and ancillary clearwells, pump stations, pipelines, and reservoirs. The estimated construction cost for this treatment plant was approximately $38,000,000. This treatment plant has a design treatment capacity of 16 mgd.*

In 1999, the U.S. Navy developed an engineering cost estimate for a water purification facility for the U.S. Navy well, Waiawa Shaft to remove trace organic contaminants from the pumped water from agricultural pesticides. This information is summarized in the Waiawa Water Treatment Plant 1391 provided in Appendix E. This treatment plant consisted of 45 granular activated carbon (GAC) filters, pump modifications and supporting laboratory facilities to be constructed near the Waiawa potable water facility. The estimated construction cost for this

treatment plant was approximately $28,300,000. This treatment plant was designed to treat 18 mgd that is produced by the U.S. Navy well, Waiawa Shaft.

Another technology that may be considered is air stripping wellhead treatment. In September of 1986, an air stripping potable water treatment plant was installed at Schofield Barracks to remove TCE from water pumped from the underlying aquifer. The facility treated approximately 3 to 6 mgd as of August of 1990 (http://www.epa.gov/superfund/sites/npl/nar972.htm). The process included one bag filter unit per well, one air-stripper unit per well, and a common collection and distribution system for all three wells and treatment units. The installed system consisted of three treatment units, each rated at 1,500 gallons per minute (gpm), which were designed to be connected to the existing three production wells. Operational cost estimates were based on the assumption that the system will operate such that only two wells and two treatment units are extracting and treating groundwater at any given time. Thus, one well and one treatment unit are on standby or in maintenance. This configuration provided for continuous treatment of 4.3 mgd of groundwater. According to the Record of Decision, EPA Superfund Record of Decision: SCHOFIELD BARRACKS (USARMY), EPA ID: HI7210090026, OU 02 SCHOFIELD, HI, 02/07/1997 (http://www.epa.gov/superfund/sites/rods/fulltext/r0997032.pdf), cost for treatment included:

- Capital costs of $650,000;
- Annual operation and maintenance costs of $217,000; and
- An estimated net present worth of $3,990,000 based on a 5 percent return and 30-year project life.

### 5.2.2 Summary of Groundwater Treatment Technologies

Due to the location of the Facility, groundwater treatment would be technically challenging. In general, fuel located on groundwater beneath the Facility would require intrusive techniques, such as drilling, to begin the removal process. Due to the locations of the USTs within the Red Hill Ridge, drilling from ground surface would require:

- Diagonal drilling with boreholes extending 200 to 300 feet through fractured basalt and clinker zones from the point of entry, drilling from limited access roads; or
- Horizontal drilling extending from 300 to 500 feet through fractured basalt and clinker zones from the point of entry from the Red Hill Ridge top limited to between Tanks.

Success of pump and treat methods of fuel removal from the water table are further limited by the high hydraulic conductivity of the basal aquifer, which requires very large pumping capacities to generate draw-downs to induce contaminant migration to the pumping location. These require large pumps and large boreholes, which are extremely costly. Smaller cones of depression would require larger numbers of boreholes. Under the site conditions, secondary source removal may not be practical. In order to protect the very important groundwater resource, a combination of remediation techniques may be recommended, including secondary

source removal between the Tanks from the ground surface through processes such as multi-phased extraction, and downgradient in situ remediation processes, such as enhanced bioremediation and air sparging.

In general, all intrusive remediation techniques would rely on an array of boreholes from ground surface to at least 20 feet below groundwater. Pilot studies would be required to determine the radius of influence of the systems, however, estimates of 20 feet lateral to flow are reasonable, thus an estimate of 35 feet between remediation wells could be considered. It is assumed that a minimum array of two rows of eight wells would be required: one located within 100 feet down gradient of the release, and one located at the downgradient perimeter of the Facility, between Tanks 1 and 2 and the Red Hill potable water infiltration gallery for U.S. Navy well 2254-01.

#### 5.2.2.1 Pump and Treat Evaluation

Pump and treat remediation processes may be required for the first phase of the remediation of a large LNAPL plume. High volume pumps would require larger diameter boreholes, on the order of 15 inches for 13-inch casing. Specific capacities of wells in the area range from 100 gpm to greater than 300 gpm per foot of drawdown. These large specific capacities present several important challenges.

- Facilities must be prepared to treat the effluent at rates at greater than 100 gpm per well or a total of 16,000 gpm to induce drawdown at all wells.
- Large capacity pumps will be required to induce the drawdown.
- Treatment facilities must be located at low elevations to counter the ground surface depth to water, which can be expected to be greater than 400 feet. As such, water would be piped to a distant location, possibly adjacent to Adit 3.

In addition to the groundwater pumps, fuel product skimmers will also be required within the same borehole and multi-phased extraction systems also include soil vapor extraction or SVE within the same borings. The design of this system would be complex and require a concerted effort to develop. The development and installation would be very costly, and overall efficiency could be poor due to the fractured rock nature of the aquifer.

#### 5.2.2.2 Enhanced Bioremediation Evaluation

The rate of bioremediation of organic contaminants by microbes is enhanced by increasing the concentration of electron acceptors and nutrients in ground water, surface water and leachate. Oxygen is the main electron acceptor for aerobic bioremediation. Nitrate serves as an alternative electron acceptor under anoxic conditions. Each of the wells within the array not used for pump and treat would be available to deliver oxygen to the groundwater as a reactive permeable barrier. One method for introducing oxygen into the impacted aquifer is by direct air sparging, in which blowers would be required to bubble air through the saturated zone penetrated by the wells. While blowers are economical sources of air, they are not particularly efficient in ensuring well-oxygenated groundwater. Other potential oxygen sources are patented oxygen

release compounds, which can be pumped into the aquifer via the well array, or patented gas infusion technology, both which use supersaturated conditions and time-release mechanisms to provide a much more efficient oxygenation of the aquifer to induce bioremediation. Additional information is available at http://toxics.usgs.gov/topics/rem_act/o2_relcompound.html.

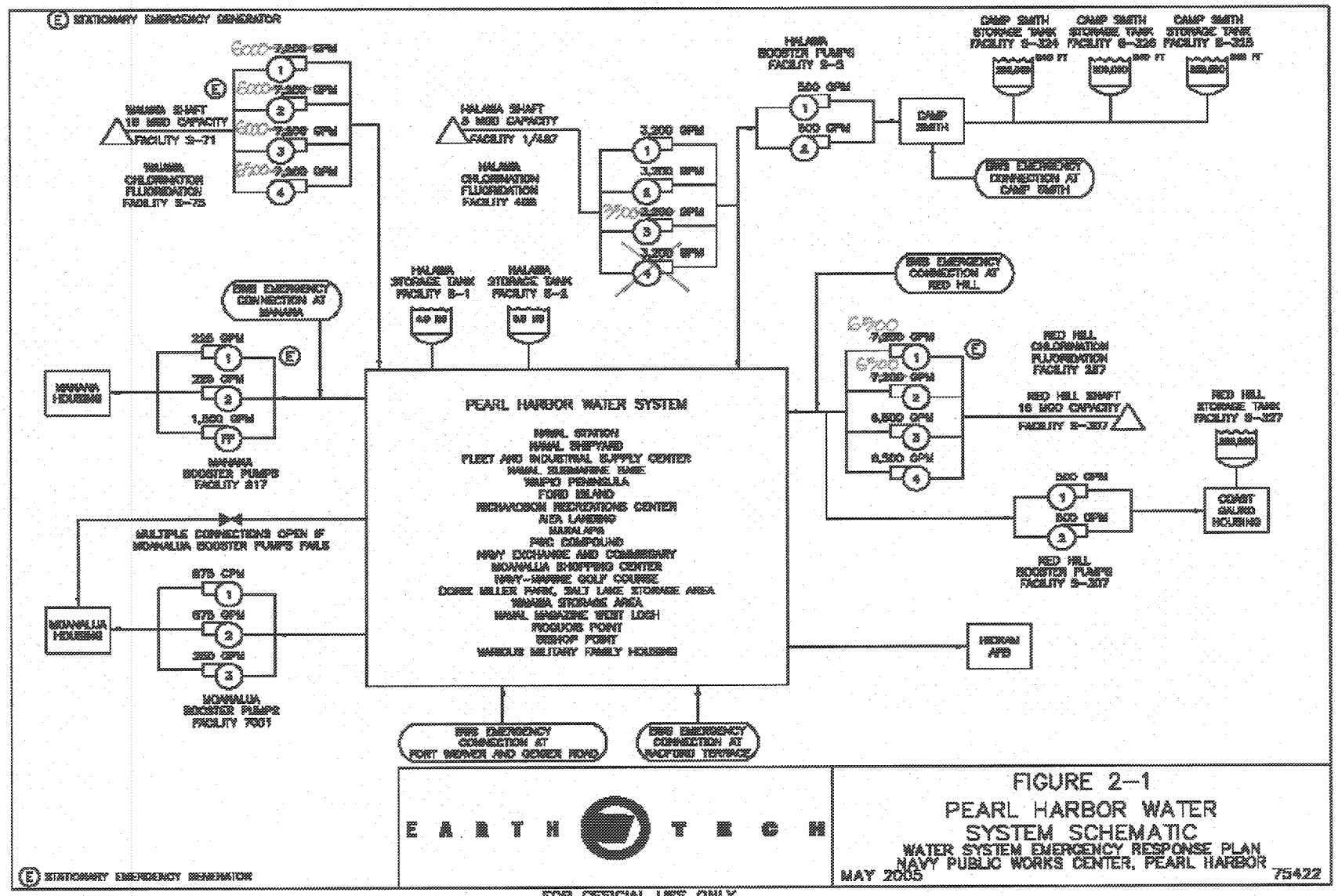


**Figure 5-1 Pearl Harbor Water System Schematic**
**Red Hill Storage Facility, Pearl Harbor, Hawaii**



ED_006532_00011133-00049

This page intentionally left blank

# 6 REFERENCES

AMEC Earth and Environmental, Inc. (AMEC). 2002. Red Hill Bulk Fuel Storage Facility Investigation Report. Prepared for NFEC. August.

Code of Federal Regulations (CFR) Title 40, Part 141.

Earth Tech, Inc. (Earth Tech). 2005. Water System Emergency Response Plan, Volume I - Policies and Procedures Manual, Pearl Harbor, Hawaii. May.

Federal Remediation Technologies Roundtable. Remediation (FRTR) Technologies Screening Matrix. http://www.frtr.gov/matrix2/section3/table3_2.html. Accessed Jan, 2007.

Gilbert, W.J, 1987. Statistical Methods for Environmental Pollution Monitoring, Van Nostrand Reinhold.]

Hawaii Administrative Record (HAR) Title 11. Chapters 20, 281, 451.

Hawaii Revised Statutes Title 19, Chapters 128D and 342L.

Hawaii Department of Health (*DOH*). 1995b. State Contingency Plan. Hawaii Administrative Rules, Chapter 11-451. August 1995.

*DOH*. 1996. Risk Based Corrective Action and Decision Making at Sites with Contaminated Soil and Groundwater, Honolulu, Hawaii. State of Hawaii, Department of Health, Environmental Management Division. Revised June 1996.

*DOH*. 1997. Draft Edition: Technical Guidance Manual for the Implementation of the Hawaii State Contingency Plan. Hazard Evaluation & Emergency Response. October 1997.

*DOH*. 2000. Technical Guidance Manual for Underground Storage Tank Closure and Release Responses. Environmental Management Division Solid and Hazardous Waste Branch, Underground Storage Tank Section. March 2000.

*DOH*. 2003. Interim Draft: Screening for Environmental Concerns at Sites with Contaminated Soil and Groundwater. Environmental Management Division. December 2003.

*DOH*. 2005. Screening for Environmental Concerns at Sites with Contaminated Soil and Groundwater. Interim Final. May. Updated November 2006.

*DOH*. 2005b. Use of May 2005 Environmental Action Levels ("EALs") at Leaking Underground Storage Tank Sites. Memo from Steven Chang, Chief, Solid & Hazardous Waste Branch To Interested Parties. July 15.

National Work Group on Leak Detection Evaluations, May 2006, Glossary of Terms, http://www.nwglde.org/glossary.html, Accessed January 20, 2007

TEC Inc., 2005. Red Hill Bulk Fuel Storage Facility Work Plan. Prepared for Department of the Navy, Commander Naval Facilities Engineering Command, Pacific. June.

United States Environmental Protection Agency (USEPA), NPL Site Narrative for Schofield Barracks, http://www.epa.gov/superfund/sites/npl/nar972.htm, Accessed June 26, 2007.

USEPA, EPA Superfund Record of Decision: Schofield Barracks (USARMY) EPA ID: H17210090026, OU 02, Schofield, Hawaii, EPA/ROD/R09-97/032, 1997.

United States Geological Survey (USGS) 2007, Oxygen Release Compound Remediation Tests, Toxic Substances Hydrology Program, http://toxics.usgs.gov/topics/rem_act/o2_relcompound.html. Accessed June 25, 2007

# Appendix A

## *Regulatory Issues and Documents*

| Appendix A: Regulatory Issues and Documents | |
|---|---|
| **Date** | **Activity** |
| December 17, 1990 | Navy Letter to DOH: In response to DOH request of October 22, 1990 for self-certification of compliance with federal release detection requirements for USTs, the Navy submitted the listing of Naval Supply Center tanks provided by DOH and self-certification forms for nine tanks that are not field-constructed |
| October 27, 1998 | Confirmed Release Notification for suspected historic release. Release ID No. 990051. |
| February 23, 1999 | Navy Letter to DOH: 120 Day Short-Long Term Release Response Report |
| April 1, 1999 | Navy Letter to DOH: 120 Day Short-Long Term Release Response Report, Initial Phase II Site Characterization Report |
| December 7, 2000 | DOH Letter to Navy: Response to telephone report of release of jet fuel discovered during field investigation activities. Release ID No. 010011. |
| April 17, 2002 | Confirmed Release Notification Form for Tank 6, JP-5 Fuel. Release ID No. 020028. |
| July 17, 2002 | Confirmed Release Notification for suspected releases discovered during a preliminary site investigation |
| September 5, 2002 | DOH Letter to Navy: Thank you for the briefing and visit to Red Hill Tank Complex on August 1, 2002. Notes that petroleum contamination exceeding DOH Tier 1 Action Levels was found beneath Tanks 1, 2, 6, 14, and 17 in 2001. |
| November 26, 2002 | Navy Report Submitted to DOH: Final Red Hill Bulk Fuel Storage Facility Investigation Report, August 2002. Release ID Nos. 990051, 010011, 020028. |
| April 4, 2003 | DOH Letter to Navy: Comments on the Investigation Report and requesting quarterly release reports and a comprehensive risk assessment |
| July 21, 2003 | DOH Letter to Navy: Acknowledgement of receipt of sampling and laboratory reports for testing at the Red Hill Adit No. 3 pumping station and request for scale maps and figures, quarterly release response reports, and a work plan for a comprehensive risk assessment for the Facility |
| October 10, 2003 | DOH Letter to Navy: Thank you for the presentation and tour of the Facility on August 12, 2003. Request for risk assessment, conceptual site model, scale maps and figures, quarterly release response reports that include groundwater monitoring data from wells installed within the Facility, quarterly testing of the Adit No. 3Drinking Water Pumping Station, copies of documentation of engineering investigations of structural integrity or leakage of the Facility, and installation of a leak detection system for the tanks. |
| June 2, 2004 | Navy Letter to DOH: Scale Drawings of Red Hill Tanks Piping System |
| June 10, 2004 | DOH Letter to Navy: Notice of Violation, Request for Information. Request for the information listed in the DOH letter of October 10, 2003. |
| July 8, 2004 | Navy Letter to DOH: Response to October 10, 2003 and June 10, 2004 DOH letters |
| August 12, 2004 | DOH Letter to Navy: Acknowledgement of receipt of Statement of Work for Long-Term Monitoring/Remedial Action and Statement of Work for A-E Services for Planning Documents and Related Technical Services. Request to coordinate sampling and monitoring activities at the nearby Navy drinking water pump station with the proper state and federal agencies governing the drinking water supply. Notes the explanation provided in Navy letter of July 8, 2004 that formal quarterly progress reports have not been prepared. Request for quarterly progress reports. |
| October 8, 2004 | Navy Report Submitted to DOH: Quarterly Progress Report |
| January 13, 2005 | Navy Report Submitted to DOH: Quarterly Progress Report |



ED_006532_00011133-00055

| Appendix A: Regulatory Issues and Documents | |
|---|---|
| **Date** | **Activity** |
| March 1, 2005 | DOH Letter to Navy: Draft Work Plan and Field Sampling Plan have been reviewed. Request for quarterly groundwater monitoring for existing sentinel well in the facility, and two additional sentinel wells proposed in the work plan. |
| April 13, 2005 | Navy Report Submitted to DOH: Quarterly Progress Report |
| May 4, 2005 | Navy Letter to DOH: Draft Work Plan for Site Investigation and Comprehensive Risk Assessment |
| June 1, 2005 | Navy Report Submitted to DOH: First Quarter 2005 Groundwater Sampling Report |
| June 7, 2005 | Navy Letter to DOH: Final Work Plan for Site Investigation and Comprehensive Risk Assessment |
| July 12, 2005 | Navy Report Submitted to DOH: Quarterly Progress Report |
| August 25, 2005 | DOH Letter to Navy: Acknowledgement of receipt of First Quarter 2005 Groundwater Sampling dated April 2005 and Work Plan dated June 2005 |
| September 7, 2005 | Navy Report Submitted to DOH: Second Quarter 2005 Groundwater Sampling Report |
| October 12, 2005 | Navy Report Submitted to DOH: Quarterly Progress Report |
| November 28, 2005 | Navy Report Submitted to DOH: Third Quarter 2005 Groundwater Sampling Report |
| January 13, 2006 | Navy Report Submitted to DOH: Quarterly Progress Report |
| January 25, 2006 | Navy Letter to DOH: September 2005 Groundwater Sampling Results |
| January 25, 2006 | Navy Report Submitted to DOH: Draft –Addendum Planning Documents |
| March 31, 2006 | Navy Report Submitted to DOH: Fourth Quarter 2005 Groundwater Sampling Report |
| April 13, 2006 | Navy Report Submitted to DOH: Quarterly Progress Report |
| April 19, 2006 | DOH Letter to Navy: Acknowledgement of receipt of June 2005 Work Plan; August 2005 and November 2005 Groundwater Sampling Reports; January 2006 Draft –Addendum Planning Documents; and January 2006 Quarterly Progress Report. |
| June 1, 2006 | Navy Letter to DOH: Final –Addendum Planning Documents |
| July 17, 2006 | Navy Report Submitted to DOH: Quarterly Progress Report |
| September 5, 2006 | Navy Letter to DOH: July 2006 Groundwater Sampling Results |
| October 12, 2006 | Navy Report Submitted to DOH: Quarterly Progress Report |
| January 8, 2007 | Navy Letter to DOH: Notification for USTs for Tanks 1 and 19, change in status to permanently out of use |
| January 11, 2007 | Navy Report Submitted to DOH: Red Hill Tank Complex Quarterly Progress Report |
| January 25, 2007 | Navy Letter to DOH: December 2006 Groundwater Sampling Results |
| April 13, 2007 | Navy Report Submitted to DOH: Quarterly Progress Report |
| May 4, 2007 | Navy Letter to DOH: March 2007 Groundwater Sampling Results |



ED_006532_00011133-00056

| Appendix A: Regulatory Issues and Documents | |
|---|---|
| **Date** | **Activity** |
| July 13, 2007 | Navy Report Submitted to DOH: Quarterly Progress Report |
| August 20, 2007 | Navy Letter to DOH: June 2007 Groundwater Sampling Results |
| August 23, 2007 | Navy Report Submitted to DOH: Final Technical Report |
| October 12, 2007 | Navy Report Submitted to DOH: Quarterly Progress Report |
| October 16, 2007 | Navy Letter to DOH: September 2007 Groundwater Sampling Results |
| January 11, 2008 | Navy Report Submitted to DOH: Quarterly Progress Report |
| January 23, 2008 | Navy Report Submitted to DOH: Final Groundwater Protection Plan |
| March 14, 2008 | Navy Report Submitted to DOH: Quarterly (January 2008) Groundwater Monitoring Report |
| June 11, 2008 | Navy Report Submitted to DOH: Quarterly (April 2008) Groundwater Monitoring Report |
| August 13, 2008 | DOH Letter to Navy: Acknowledgement of receipt of Final Technical Report of August 2007 and Final Groundwater Protection Plan of January 2008. Concurrence with the technical analysis and preventive maintenance program. Request to continue quarterly groundwater monitoring of the four monitoring wells within the complex, and the monitoring point within the Navy drinking water pump station. |
| September 3, 2008 | Navy Letter to DOH: Responses to Review Comments on Final Site Investigation Technical Report |
| September 30, 2008 | Navy Report Submitted to DOH: Tank 17 Removal Action Report |
| October 20, 2008 | Navy Report Submitted to DOH: Quarterly (July 2008) Groundwater Monitoring Report |
| February 18, 2009 | Navy Report Submitted to DOH: Quarterly (October 2008) Groundwater Monitoring Report |
| May 7, 2009 | Navy Report Submitted to DOH: Quarterly (February 2009) Groundwater Monitoring Report |
| June 1, 2009 | Navy Letter to DOH: Oil/Water Interface Measurements for May 2009 |
| July 22, 2009 | Navy Report Submitted to DOH: Quarterly (May 2009) Groundwater Monitoring Report |
| July 22, 2009 | Navy Letter to DOH: Oil/Water Interface Measurements for July 2009 |
| August 25, 2009 | Navy Letter to DOH: Oil/Water Interface Measurements for August 2009 |
| September 4, 2009 | Navy Letter to City and County of Honolulu Board of Water Supply: Request to access Board of Water Supply wells to support a comprehensive assessment of the local and regional groundwater flow direction and gradient |
| September 15, 2009 | Navy Report Submitted to DOH: Quarterly (July 2009) Groundwater Monitoring Report |
| October 5, 2009 | Navy Letter to DOH: Oil/Water Interface Measurements for September 2009 |
| October 8, 2009 | Navy Report Submitted to DOH: Quarterly (August 2009) Groundwater Monitoring Report for Outside (Non-Tunnel) Wells |
| October 30, 2009 | Navy Letter to DOH: Oil/Water Interface Measurements for October 2009 |
| December 1, 2009 | Navy Letter to DOH: Oil/Water Interface Measurements for November 2009 |



ED_006532_00011133-00057

| Appendix A: Regulatory Issues and Documents | |
|---|---|
| **Date** | **Activity** |
| December 15, 2009 | Navy Reports Submitted to DOH: Documents for Tank 15: 1. Repairs completed June 2005, 2. Report on Phase 2 As-Built Repairs of March 2006, 3. Final API-653 Inspection Report of January 2007 |
| December 16, 2009 | Navy Report Submitted to DOH: Groundwater Protection Plan Revisions |
| December 18, 2009 | Navy Letter to DOH: Oil/Water Interface Measurements for December 2009 |
| December 18, 2009 | Navy Report Submitted to DOH: Quarterly (October 2009) Groundwater Monitoring Report for Outside (Non-Tunnel) Wells |
| December 22, 2009 | Navy Report Submitted to DOH: Quarterly (October 2009) Groundwater Monitoring Report for Inside Tunnel Wells |
| January 29, 2010 | Navy Letter to DOH: Oil/Water Interface Measurements for January 2010 |
| February 26, 2010 | Navy Letter to DOH: Oil/Water Interface Measurements for February 2010 |
| March 29, 2010 | Navy Letter to DOH: Oil/Water Interface Measurements for March 2010 |
| April 28, 2010 | Navy Report Submitted to DOH: Quarterly (January 2010) Groundwater Monitoring Report for Inside Tunnel Wells |
| April 29, 2010 | Navy Report Submitted to DOH: Quarterly (January 2010) Groundwater Monitoring Report for Outside (Non-Tunnel) Wells |
| May 5, 2010 | Navy Letter to DOH: Oil/Water Interface Measurements for April 2010 |
| June 11, 2010 | Navy Letter to DOH: Oil/Water Interface Measurements for May 2010 |
| June 11, 2010 | Navy Report Submitted to DOH: Type 1 Letter Report – Re-evaluation of the Tier 3 Risk Assessment/ Groundwater Model & Proposed Course of Action |
| June 11, 2010 | Navy Report Submitted to DOH: Quarterly (April 2010) Groundwater Monitoring Report for Outside (Non-Tunnel) Wells |
| June 30, 2010 | Navy Letter to DOH: Oil/Water Interface Measurements for June 2010 |
| June 30, 2010 | Navy Report Submitted to DOH: Quarterly (April 2010) Groundwater Monitoring Report for Inside Tunnel Wells |
| August 2, 2010 | Navy Letter to DOH: Oil/Water Interface Measurements for July 2010 |
| September 8, 2010 | Navy Report Submitted to DOH: Quarterly (July 2010) Groundwater Monitoring Report for Outside (Non-Tunnel) Wells |
| September 8, 2010 | Navy Report Submitted to DOH: Quarterly (July 2010) Groundwater Monitoring Report for Inside Tunnel Wells |
| October 4, 2010 | Navy Report Submitted to DOH: Work Plan, Long-Term Monitoring |
| October 19, 2010 | Navy Report Submitted to DOH: Type 2 Letter Report – Proposal for Groundwater Treatment |



ED_006532_00011133-00058

| Appendix A: Regulatory Issues and Documents | |
|---|---|
| **Date** | **Activity** |
| October 21, 2010 | Navy Letter to DOH: Oil/Water Interface Measurements for September 2010 |
| October 26, 2010 | Navy Letter to DOH: Oil/Water Interface Measurements for October 2010 |
| November 29, 2010 | Navy Letter to DOH: Oil/Water Interface Measurements for November 2010 |
| December 8, 2010 | DOH Letter to Navy: Acknowledgement of receipt of 17 documents. Concurrence that monthly free product checks and soil vapor monitoring should continue as well as quarterly groundwater monitoring of the wells within the complex. Concurrence that consideration should be given for periodic sampling of wells outside the complex. |
| December 21, 2010 | Navy Letter to DOH: Oil/Water Interface Measurements for December 2010 |
| January 19, 2011 | Navy Letter to DOH: Oil/Water Interface Measurements for January 2011 |
| February 28, 2011 | Navy Letter to DOH: Oil/Water Interface Measurements for February 2011 |
| March 8, 2011 | Navy Report Submitted to DOH: Quarterly (October 2010) Groundwater Monitoring Report for Outside (Non-Tunnel) Wells |
| March 10, 2011 | Navy Report Submitted to DOH: Quarterly (October and November 2010) Groundwater Monitoring Report for Inside Tunnel Wells |
| March 30, 2011 | Navy Letter to DOH: Oil/Water Interface Measurements for March 2011 |
| April 14, 2011 | Navy Report Submitted to DOH: Quarterly (January 2011) Groundwater Monitoring Report for Outside (Non-Tunnel) Wells |
| April 18, 2011 | Navy Report Submitted to DOH: Quarterly (January 2011) Groundwater Monitoring Report for Inside Tunnel Wells |
| April 29, 2011 | Navy Letter to DOH: Oil/Water Interface Measurements for April 2011 |
| May 31, 2011 | Navy Letter to DOH: Oil/Water Interface Measurements for May 2011 |
| June 30, 2011 | Navy Letter to DOH: Oil/Water Interface Measurements for June 2011 |
| July 8, 2011 | Navy Report Submitted to DOH: Quarterly (April 2011) Groundwater Monitoring Report for Outside (Non-Tunnel) Wells |
| July 8, 2011 | Navy Report Submitted to DOH: Quarterly (April 2011) Groundwater Monitoring Report for Inside Tunnel Wells |
| August 2, 2011 | Navy Letter to DOH: Oil/Water Interface Measurements for July 2011 |
| September 1, 2011 | Navy Letter to DOH: Oil/Water Interface Measurements for August 2011 |
| September 30, 2011 | Navy Report Submitted to DOH: Quarterly (July 2011) Groundwater Monitoring Report for Outside (Non-Tunnel) Wells |
| September 30, 2011 | Navy Letter to DOH: Oil/Water Interface Measurements for September 2011 |
| October 10, 2011 | Navy Report Submitted to DOH: Quarterly (July 2011) Groundwater Monitoring Report for Inside Tunnel Wells |



ED_006532_00011133-00059

| Appendix A: Regulatory Issues and Documents | |
|---|---|
| **Date** | **Activity** |
| November 8, 2011 | Navy Letter to DOH: Oil/Water Interface Measurements for October 2011 |
| December 5, 2011 | Navy Letter to DOH: Oil/Water Interface Measurements for November 2011 |
| December 28, 2011 | Navy Letter to DOH: Oil/Water Interface Measurements for December 2011 |
| February 1, 2012 | Navy Letter to DOH: Oil/Water Interface Measurements for January 2012 |
| February 29, 2012 | Navy Report Submitted to DOH: Quarterly (October 2011) Groundwater Monitoring Report for Outside (Non-Tunnel) Wells |
| March 1, 2012 | Navy Letter to DOH: Oil/Water Interface Measurements for February 2012 |
| March 6, 2012 | Navy Report Submitted to DOH: Quarterly (October and November 2011) Groundwater Monitoring Report for Inside Tunnel Wells |
| March 26, 2012 | Navy Letter to DOH: Oil/Water Interface Measurements for March 2012 |
| April 11, 2012 | Navy Report Submitted to DOH: Quarterly (January 2012) Groundwater Monitoring Report for Outside (Non-Tunnel Wells) |
| April 12, 2012 | Navy Report Submitted to DOH: Quarterly (January and February 2012) Groundwater Monitoring Report for Inside Tunnel Wells |
| April 20, 2012 | Navy Letter to DOH: Oil/Water Interface Measurements for April 2012 |
| May 22, 2012 | Navy Letter to DOH: Oil/Water Interface Measurements for May 2012 |
| June 29, 2012 | Navy Letter to DOH: Oil/Water Interface Measurements for June 2012 |
| July 13, 2012 | Navy Report Submitted to DOH: Quarterly (April 2012) Groundwater Monitoring Report for Outside (Non-Tunnel) Wells |
| July 16, 2012 | Navy Report Submitted to DOH: Quarterly (April 2012) Groundwater Monitoring Report for Inside Tunnel Wells |
| July 17, 2012 | Navy Letter to DOH: Oil/Water Interface Measurements for July 2012 |
| August 24, 2012 | Navy Letter to DOH: Oil/Water Interface Measurements for August 2012 |
| September 27, 2012 | Navy Report Submitted to DOH: Quarterly (July 2012) Groundwater Monitoring Report for Outside (Non-Tunnel) Wells |
| September 28, 2012 | Navy Report Submitted to DOH: Quarterly (July 2012) Groundwater Monitoring Report for Inside Tunnel Wells |
| October 10, 2012 | DOH Letter to Navy: DOH continues to have no objection to the contingency triggers or action and time schedules regarding the Groundwater Protection Plan (specifically Table 4-2) |
| November 5, 2012 | Navy Letter to DOH: Oil/Water Interface Measurements for October 2012 |
| December 4, 2012 | Navy Letter to DOH: Oil/Water Interface Measurements for November 2012 |
| January 18, 2013 | Navy Letter to DOH: Oil/Water Interface Measurements for December 2012 |
| January 30, 2013 | Navy Report Submitted to DOH: November 2012 Groundwater Monitoring Report for Outside (Non-Tunnel) Wells |
| February 13, 2013 | Navy Letter to DOH: Oil/Water Interface Measurements for January 2013 |



ED_006532_00011133-00060

| Appendix A: Regulatory Issues and Documents | |
|---|---|
| **Date** | **Activity** |
| February 13, 2013 | Navy Report Submitted to DOH: October 2012 Groundwater Monitoring Report for Inside Tunnel Wells |
| March 12, 2013 | Navy Letter to DOH: Oil/Water Interface Measurements for February 2013 |
| April 16, 2013 | Navy Letter to DOH: Oil/Water Interface Measurements for March 2013 |
| May 3, 2013 | Navy Letter to DOH: Oil/Water Interface Measurements for April2013 |
| May 7, 2013 | Navy Report Submitted to DOH: January 2013 Groundwater Monitoring Report for Inside Tunnel Wells |
| May 7, 2013 | Navy Report Submitted to DOH: January 2013 Groundwater Monitoring Report for Outside (Non-Tunnel) Wells |
| June 6, 2013 | Navy Letter to DOH: Oil/Water Interface Measurements for May 2013 |
| July 18, 2013 | Navy Letter to DOH: Oil/Water Interface Measurements for June 2013 |
| July 23, 2013 | Navy Report Submitted to DOH: Second Quarter 2013 – Quarterly Groundwater Monitoring Report, Outside (Non-Tunnel) Wells |
| August 6, 2013 | Navy Report Submitted to DOH: Second Quarter 2013 – Quarterly Groundwater Monitoring Report, Inside Tunnel Wells |
| September 18, 2013 | Navy Letter to DOH: Oil/Water Interface Measurements for August 2013 |
| October 1, 2013 | Navy Report Submitted to DOH: Third Quarter 2013 – Quarterly Groundwater Monitoring Report, Outside (Non-Tunnel) Wells |
| October 2, 2013 | Navy Report Submitted to DOH: Third Quarter 2013 – Quarterly Groundwater Monitoring Report, Inside Tunnel Wells |
| October 17, 2013 | Navy Letter to DOH: Oil/Water Interface Measurements for September 2013 |
| November 6, 2013 | Navy Letter to DOH: Oil/Water Interface Measurements for October 2013 |
| November 27, 2013 | Navy Letter to DOH: Oil/Water Interface Measurements for November 2013 |
| January 8, 2014 | Navy Letter to DOH: Oil/Water Interface Measurements for December 2013 |
| January 21, 2014 | Navy Report Submitted to DOH: Fourth Quarter 2014 – Quarterly Groundwater Monitoring Report, Inside Tunnel Wells |
| January 23, 2014 | Navy Letter to DOH: Confirmed Release Notification Form for Tank 5, JP-8. Release ID No. 140010. |
| January 27, 2014 | Navy Report Submitted to DOH: Soil Vapor Sampling Report for Tank 5 |
| January 31, 2014 | Navy Report Submitted to DOH: Fourth Quarter 2014 – Quarterly Groundwater Monitoring Report, Outside (Non-Tunnel) Wells |
| February 3, 2014 | DOH Letter to Navy: Acknowledgement of receipt of Confirmed Release Notification |
| February 12, 2014 | DOH Letter to Navy: Requirements of the DOH-UST Program and the regulations governing USTs under HAR 11-281. Initial Release Response Report is due within 90 days of reporting a confirmed UST release. Request for a preliminary Work Plan report to discuss methods for achieving the requirements of HAR 11-281 Subchapter 7. Preliminary report due within 30 days of receipt of the letter. |



ED_006532_00011133-00061

| Appendix A: Regulatory Issues and Documents | |
|---|---|
| **Date** | **Activity** |
| February 26, 2014 | DOH Letter to Navy: Request specific release response action items by the Navy: 1. Provide schedule for venting and investigation of release point(s) within Tank 5, 2. Prepare models for vertical migration of JP-8 released from Tank 5, 3. Characterize free product plume and recover free product with increased monitoring, 4. Reserve and increase funding for all phases of release response, 5. Provide written weekly progress reports |
| March 7, 2014 | Navy Letter to DOH: Oil/Water Interface Measurements for February 2014 |
| March 7, 2014 | Navy Report Submitted to DOH: Tank 5 Release Weekly Status Report No. 1 |
| March 10, 2014 | Navy Letter to DOH: Summary of Monthly Soil Vapor Sampling Results through February 2014 |
| March 10, 2014 | Navy Letter to DOH: Summary of Monthly Soil Vapor Sampling Results through March 5, 2014 |
| March 14, 2014 | Navy Report Submitted to DOH: Soil Vapor Sampling Report for March 10, 2014 |
| March 14, 2014 | Navy Report Submitted to DOH: Tank 5 Release Weekly Status Report No.2 |
| March 14, 2014 | Navy Letter to DOH: Preliminary Work Plan |
| March 21, 2014 | Navy Report Submitted to DOH: Tank 5 Release Weekly Status Report No. 3 |
| March 27, 2014 | Navy Report Submitted to DOH: Soil Vapor Sampling report for March 21, 2014 |
| March 27, 2014 | Navy Report Submitted to DOH: Tank 5 Release Weekly Status Report No. 4 |
| April 3, 2014 | Navy Report Submitted to DOH: Tank 5 Release Weekly Status Report No. 5 |
| April 7, 2014 | Navy Report Submitted to DOH: Soil Vapor Sampling Report for March 25 and 28, 2014 |
| April 7, 2014 | Navy Report Submitted to DOH: First Quarter 2014 – Quarterly Groundwater Monitoring Report for Inside Tunnel Wells |
| April 7, 2014 | Navy Letter to DOH: Oil/Water Interface Measurements for March 28, 2014 |
| April 8, 2014 | Navy Report Submitted to DOH: Groundwater Monitoring Report for March 5 and 6, 2014 Sampling Event |
| April 8, 2014 | Navy Report Submitted to DOH: Groundwater Monitoring Report for March 10, 2014 Sampling Event |
| April 9, 2014 | Navy Report Submitted to DOH: First Quarter 2014 – Quarterly Groundwater Monitoring Report for Outside (Non-Tunnel) Wells |
| April 14, 2014 | Navy Report Submitted to DOH: Tank 5 Release Weekly Status Report No. 6 |
| April 14, 2014 | Navy Letter to DOH: Expansion Joint Information |
| April 14, 2014 | Navy Report Submitted to DOH: Soil Vapor Monitoring Report for April 3, 2014 |
| April 15, 2014 | Navy Report Submitted to DOH: Soil Vapor Monitoring Report for April 7, 2014 |
| April 17, 2014 | Navy Report Submitted to DOH: Tank 5 Release Weekly Status Report No. 7 |
| April 21, 2014 | Navy Letter to DOH: Oil/Water Interface Measurements for April 7, 2014 |
| April 21, 2014 | Navy Report Submitted to DOH: Soil Vapor Monitoring Report for April 16, 2014 |
| April 22, 2014 | Navy Report Submitted to DOH: Groundwater Monitoring Report for March 25 and 26, 2014 Sampling Event |



ED_006532_00011133-00062

| Appendix A: Regulatory Issues and Documents | |
|---|---|
| **Date** | **Activity** |
| April 24, 2014 | Navy Report Submitted to DOH: Tank 5 Initial Release Response Report |
| April 24, 2014 | Navy Report Submitted to DOH: Tank 5 Release Weekly Status Report No. 8 |
| May 1, 2014 | Navy Letter to DOH: Oil/Water Interface Measurements for April 21 and 22, 2014 |
| May 1, 2014 | Navy Report Submitted to DOH: Tank 5 Release Weekly Status Report No. 9 |
| May 5, 2014 | Navy Report Submitted to DOH: Groundwater Monitoring Report for April 7, 2014 Sampling Event |
| May 5, 2014 | Navy Report Submitted to DOH: Soil Vapor Monitoring Report for May 1, 2014 |
| May 7, 2014 | Navy Report Submitted to DOH: Soil Vapor Monitoring Report for April 21 and 22, 2014 |
| May 8, 2014 | Navy Report Submitted to DOH: Tank 5 Release Weekly Status Report No. 10 |
| May 14, 2014 | Navy Letter to DOH: Oil/Water Interface Measurements for May 8, 2014 |
| May 14, 2014 | Navy Report Submitted to DOH: Soil Vapor Monitoring Report for May 8, 2014 |
| May 14, 2014 | Navy Report Submitted to DOH: Tank 5 Release Weekly Status Report No. 11 |
| May 16, 2014 | Navy Letter to DOH: Additional Monitoring Well Locations |
| May 27, 2014 | Navy Report Submitted to DOH: Tank 5 Release Weekly Status Report No. 12 |
| May 27, 2014 | Navy Report Submitted to DOH: Soil Vapor Monitoring Report for May 15, 2014 |
| May 27, 2014 | Navy Report Submitted to DOH: Groundwater Monitoring Report for April 23, 2014 Sampling Event (TAMC MW-2) |
| May 28, 2014 | Navy Report Submitted to DOH: Tank 5 Release Weekly Status Report No. 13 |
| May 28, 2014 | Navy Letter to DOH: Oil/Water Interface Measurements for May 22, 2014 |
| June 2, 2014 | Navy Report Submitted to DOH: Soil Vapor Monitoring Report for May 21, 2014 |
| June 2, 2014 | Navy Letter to DOH: Oil/Water Interface Measurements for May 27 and 28, 2014 |
| June 6, 2014 | Navy Report Submitted to DOH: Soil Vapor Monitoring Report for May 27 and 28, 2014 |
| June 6, 2014 | Navy Report Submitted to DOH: Tank 5 Release Weekly Status Report No. 14 |
| June 16, 2014 | Navy Report Submitted to DOH: Soil Vapor Monitoring Report for June 3, 2014 |
| June 16, 2014 | Navy Letter to DOH: Oil/Water Interface Measurements for June 10, 2014 |
| June 16, 2014 | Navy Report Submitted to DOH: Tank 5 Release Weekly Status Report No. 15 |
| June 17, 2014 | Navy Report Submitted to DOH: Soil Vapor Monitoring Report for June 11, 2014 |
| June 23, 2014 | Navy Report Submitted to DOH: Tank 5 Release Weekly Status Report No. 16 |
| June 30, 2014 | Navy Report Submitted to DOH: Tank 5 Release Weekly Status Report No. 17 |
| June 30, 2014 | Navy Report Submitted to DOH: Soil Vapor Monitoring Report for June 19, 2014 |
| July 7, 2014 | Navy Report Submitted to DOH: Tank 5 Release Weekly Status Report No. 18 |



ED_006532_00011133-00063

| Appendix A: Regulatory Issues and Documents | |
|---|---|
| **Date** | **Activity** |
| July 7, 2014 | Navy Report Submitted to DOH: Second Quarter 2014 – Quarterly Groundwater Monitoring Report for Inside Tunnel Wells |
| July 7, 2014 | Navy Report Submitted to DOH: Second Quarter 2014 – Quarterly Groundwater Monitoring Report for Outside Tunnel Wells |
| July 7, 2014 | Navy Report Submitted to DOH: Groundwater Monitoring Report for May 27 and 28, 2014 Sampling Event |
| July 7, 2014 | Navy Letter to DOH: Oil/Water Interface Measurements for June 23 and 24, 2014 |
| July 7, 2014 | Navy Report Submitted to DOH: Soil Vapor Monitoring Report for June 23 and 24, 2014 |
| July 10, 2014 | Navy Report Submitted to DOH: Tank 5 Release Weekly Status Report No. 19 |
| July 16, 2014 | Navy Report Submitted to DOH: TAMC MW-2 Groundwater Monitoring Report for June 23, 2014 Sampling Event |
| July 16, 2014 | Navy Letter to DOH: Draft Work Plan/ Sampling and Analysis Plan, Monitoring Well Installation |
| July 22, 2014 | Navy Report Submitted to DOH: Tank 5 Release Weekly Status Report No. 20 |
| July 22, 2014 | Navy Report Submitted to DOH: Soil Vapor Monitoring Report for July 9, 2014 |
| July 22, 2014 | Navy Report Submitted to DOH: Groundwater Monitoring Report for June 23 and 24, 2014 Sampling Event |
| July 23, 2014 | Navy Report Submitted to DOH: Quarterly Release Response Report |
| July 25, 2014 | Navy Report Submitted to DOH: Tank 5 Release Weekly Status Report No. 21 |
| July 29, 2014 | Navy Letter to DOH: Draft Work Plan/ Sampling and Analysis Plan, Tank 5 Area Characterization |
| August 1, 2014 | Navy Report Submitted to DOH: Tank 5 Release Weekly Status Report No. 22 |
| August 6, 2014 | Navy Letter to DOH: Oil/Water Interface Measurements for July 2014 |
| August 6, 2014 | Navy Report Submitted to DOH: Soil Vapor Monitoring Report for July 21 and 22, 2014 |
| August 11, 2014 | Navy Report Submitted to DOH: Tank 5 Release Weekly Status Report No. 23 |
| August 15, 2014 | Navy Report Submitted to DOH: Tank 5 Release Weekly Status Report No. 24 |
| August 20, 2014 | Navy Report Submitted to DOH: Tank 5 Release Weekly Status Report No. 25 |
| August 21, 2014 | Navy Letter to DOH: Final Work Plan/ Sampling and Analysis Plan, Monitoring Well Installation |



ED_006532_00011133-00064

# Appendix B

# Modified API 653 Tank Inspection Procedure

SAMPLE OF COMPLETED UST INSPECTION CHECKLIST

API 653 governs above ground storage tanks (ASTs). A modified API 653 inspection is used for the inspection of underground storage tanks (USTs), since API does not have a specification for USTs. The spec standardizes AST inspections, and the contractor is expected to apply the standard to a UST to the extent possible. Modifications to the standard are required, such as not performing the external inspection of the tank, et cetera, since it's underground. The specific inspection items may vary from UST to UST depending on site specific conditions. The Government relies on recommendations from the Contractor's tank expert and professional engineer on which inspection activities apply for specific tanks. Attached is the Government accepted modified API 653 checklist that was used for Tank 5.

SAMPLE OF COMPLETED UST INSPECTION CHECKLIST

| | Tank Out-of-service Inspection Checklist | | |
|---|---|---|---|
| | Item | Completed X | Comments |
| C.2.1 | Overview | | |
| a) | Check that tank has been cleaned, is gas free, and safe for entry. | X | |
| b) | Check that the tank is completely isolated from product lines, all electrical power, and steam lines. | X | |
| c) | Check that roof is adequately supported, including fixed roof structure and floating roof legs. | X | |
| d) | Check for presence of falling object hazards, such as corroded-through roof rafters, asphalt stalactites, and trapped hydrocarbons in unopened or plugged equipment or appurtenances, ledges, etc. | X | |
| e) | Inspect for slipping hazards on the bottom and roof decks. | X | |
| f) | Inspect structural welds on accessways and clips. | X | |
| g) | Check surfaces needing inspection for a heavy-scale buildup and check weld seams and oily surfaces where welding is to be done. Note areas needing more cleaning, including blasting. | X | |
| h) | Review cathodic protection potential readings. | NA | NA=Not applicable/accessible |
| C.2.2. | Tank Exterior | NA | NA=Not applicable/accessible |
| a) | Inspect appurtenances opened during cleaning such as lower floating swing sheave assemblies, nozzle interiors (after removal of valves). | NA | |
| b) | Hammer test or ultrasonically test the roof. | NA | |
| c) | Enter and inspect the floating roof pontoon compartments. | NA | |
| C.2.3. | Bottom Interior Surface | | |
| a) | Using a flashlight held close to and parallel to the bottom plates, and using the bottom plate layout as a guide, visually inspect and hammer test the entire bottom. | X | See inspection report |
| b) | Measure the depth of pitting and describe the pitting appearance (sharp edged, lake type, dense, scattered, etc.) | X | See inspection report |
| c) | Mark areas requiring patching or further inspection. | X | See inspection report |
| d) | Mark locations for turning coupons for inspection. | NA | |
| e) | Inspect all welds for corrosion and leaks, particularly the shell-to-bottom weld. | X | See inspection report |
| f) | Inspect sketch plates for corrosion. | X | See inspection report |
| g) | Check condition of internal sump, if applicable. Standing liquid should be removed from the sump to allow for complete inspection and vacuum testing of weld seams as appropriate. Sump bottom and sidewall plate and seams need to be evaluated for both product-side and soil-side corrosion. | NA | |
| h) | Locate and mark voids under the bottom. | X | See inspection report |
| i) | Record bottom data on a layout sketch using the existing bottom plates as a grid. List the number and sizes of patches required. | X | See inspection report |
| j) | Vacuum test the bottom lap welds. | NA | |
| k) | Hammer test or ultrasonically examine any slightly discolored spots or damp areas. | X | |
| l) | Check for reinforcing pads under all bottom attached clips, brackets, and supports. | X | |
| m) | Inspect floating roof leg pads for pitting or cutting, and excessive dimpling (indicating excessive loading). | NA | |
| n) | Check the column bases of fixed roof supports for adequate pads and restraining clips. | X | |
| o) | In earthquake Zones 3 and 4, check that roof supports are not welded down to the tank bottom, but are only restrained from horizontal movement. | X | |
| p) | Check area beneath swing line cable for indications of cable cutting or dragging. | NA | |
| q) | Mark old oil and air test connection for removal and patching. | NA | |
| r) | Identify and report low areas on the bottom that do not drain adequately. | X | |
| s) | Inspect coating for holes, disbonding, deterioration, and discoloration. | X | |
| C.2.4. | Shell Seams and Plate | | |
| a) | On cone up bottoms, closely inspect and gauge the depth of metal loss on the lower 2 in. to 4 in. of the shell (area of standing water). | NA | |
| b) | Measure the depth of pitting on each course. | X | See inspection report |

SAMPLE OF COMPLETED UST INSPECTION CHECKLIST

| | Tank Out-of-service Inspection Checklist | | |
|---|---|---|---|
| | Item | Completed X | Comments |
| c) | Inspect and estimate the amount of metal loss on the heads of rivets and bolts. | NA | NA=Not applicable/accessible |
| d) | Inspect shell-to-bottom riveted lap joints. | NA | NA=Not applicable/accessible |
| e) | Inspect for vertical grooving damage from seal assembly protrusions. | NA | NA=Not applicable/accessible |
| f) | Inspect existing protective coatings for damage, deterioration, and disbonding. | X | See inspection report |
| g) | Check for areas of rubbing (indicating too much pressure by the seal assembly shoes or inadequate annular space). | NA | |
| h) | Visually inspect the shell plates and seams for indications of leakage. | X | See inspection report |
| i) | If the shell has riveted or bolted seams, record the leak locations by film or chart in case the locations are lost during surface preparation for painting. | NA | |
| j) | Measure annular space at 40-ft intervals. | NA | |
| k) | Survey the shell to check for roundness and plumb. | X | |
| C.2.5 | **Shell-mounted Overflows** | NA | NA=Not applicable/accessible |
| a) | Inspect overflow for corrosion and adequate screening. | NA | |
| b) | Check location of overflow that it is not above any tank valves or equipment. | NA | |
| C.2.6 | **Roof Interior Surface** | | |
| C.2.6.1 | **General** | NA | NA=Not applicable/accessible |
| a) | Visually inspect the underside surface of the roof plates for holes, scale buildup, and pitting. | NA | |
| b) | Hammer test or ultrasonically examine to check for thin areas, particularly in the vapor space of floating roofs and at edge of roof on cone roof tank. | NA | |
| c) | Check all clips, brackets, braces, etc., welded to the roof deck plate for welded reinforcing pads and see that they have not broken free. | NA | |
| d) | If no pad is present, penetrant test for cracking of the weld or deck plate. | NA | |
| e) | Inspect for protective coating for breaks, disbondment, and deterioration. | NA | |
| f) | Spark test the interior surface coating if recoating is not planned. | NA | |
| C.2.6.2 | **C.2.6.2 Fixed Roof Support Structure** | NA | |
| a) | Inspect the support columns for thinning in the upper 2 ft. | NA | |
| b) | On API columns (two channels welded together) check for corrosion scale breaking the tack welds, unless the joint between the channels is completely seal welded. | NA | |
| c) | Check that the reinforcing pad on the bottom is seal-welded to the tank bottom with horizontal movement restraining clips welded to the pad. | NA | |
| d) | Determine if pipe column supports are concrete filled or open pipe. If open pipe, check for a drain opening in the bottom of the pipe. | NA | |
| e) | Inspect and gauge rafters for thinning, particularly near the center of the roof. Report metal loss. | NA | |
| f) | Check for loose or twisted rafters. | NA | |
| g) | Inspect girders for thinning and check that they are attached securely to the top of the columns. | NA | |
| h) | Report if the columns have cross bracing in the area between the low pump out of the top of the shell (for future internal floating roof installation). | NA | |
| i) | Inspect and report presence of any roof-mounted swing line bumpers. | NA | |
| j) | Photograph the roof structure if no rafter layout drawing exists. | NA | |
| C.2.7 | **Fixed Roof Appurtenances** | NA | NA=Not applicable/accessible |
| C.2.7.1 | **Inspection and Light Hatches** | NA | |
| a) | Inspect the hatches for corrosion, paint and coating failures, holes, and cover sealing. | NA | |
| b) | On loose covers, check for a safety chain in good condition. | NA | |
| c) | On light hatches over 30 in. across, check for safety rods. | NA | |
| d) | Inspect the condition of the gaskets on bold or latched down hatch covers. | NA | |
| C.2.7.2 | **Staging Support Connection** | NA | |
| | Inspect the condition of the staging support for corrosion. | NA | |
| C.2.7.3 | **Breathers and Vents** | NA | |
| a) | Inspect and service the breather. | NA | |
| b) | Inspect screens on vents and breathers. | NA | |
| C.2.7.4 | **Emergency P/V Hatches** | NA | |

SAMPLE OF COMPLETED UST INSPECTION CHECKLIST

| | Tank Out-of-service Inspection Checklist | | |
|---|---|---|---|
| | Item | Completed X | Comments |
| a) | Inspect and service pressure/vacuum hatches. (Setting should be high enough to prevent chattering of breather during normal operation. See breather manufacturer's guide.) | NA | |
| b) | Inspect liquid seal hatches for corrosion and proper liquid level in the seal. | NA | |
| C.2.7.5 | **Sample Hatch** | NA | |
| a) | Inspect sample hatch for corrosion. | NA | |
| b) | Check that the cover operates properly. | NA | |
| c) | If the tank has no gauge well, check for a hold-off distance marker and check measurement. | NA | |
| C.2.8 | **Floating Roof** | NA | NA=Not applicable/accessible |
| C.2.8.1 | **Roof Deck** | NA | |
| a) | Hammer test the area between roof rim and shell. (If access for hammer testing is inadequate, measure the distance from the bottom edge of the roof to the corroded area and then hammer test from inside the pontoon.) | NA | |
| b) | In sour water service, clean and test all deck plate weld seams for cracking unless the lower laps have been seal-welded. | NA | |
| c) | Check that either the roof drain is open or the drain plug in the roof is open in case of unexpected rain. | NA | |
| d) | On flat bottomed and cone bottom roof decks, check for a vapor dam around the periphery of the roof. The dam should be continuous without break to prevent escape of vapors to the seal area from under the center of the roof. | NA | |
| C.2.8.2 | **Floating Roof Pontoons** | NA | |
| a) | Visually inspect each pontoon for liquid leakage. | NA | |
| b) | Run a light wire through the gooseneck vents on locked down inspection hatch covers to make sure they are open. | NA | |
| c) | Inspect lockdown latches on each cover. | NA | |
| d) | Check and report if each pontoon is: | NA | |
| 1) | vapor tight (bulkhead seal welded on one side on bottom, sides, and top), | NA | |
| 2) | liquid tight (seal-welded on bottom and sides only), or | NA | |
| 3) | unacceptable (minimum acceptable condition is liquid tight). | NA | |
| C.2.8.3 | **Floating Roof Cutouts** | NA | |
| a) | Inspect underside of cutouts for mechanical damage. | NA | |
| b) | Inspect welds for cracks. | NA | |
| c) | Inspect plate for thinning, pitting, and erosion. | NA | |
| d) | Measure mixer cutouts and record plate thickness for future mixer installation or replacement.<br>Plate thickness_____. | NA | |
| C.2.8.4 | **Floating Roof Supports** | NA | |
| a) | Inspect fixed low and removable high floating roof legs for thinning. | NA | |
| b) | Inspect for notching at bottom of legs for drainage. | NA | |
| c) | Inspect for leg buckling or felling at bottom. | NA | |
| d) | Inspect pin hole in roof guide for tears. | NA | |
| e) | Check plumb of all legs. | NA | |
| f) | Inspect for adequate reinforcing gussets on all legs through a single portion of the roof. | NA | |
| g) | Inspect the area around the roof legs for cracking if there is no internal reinforcing pad or if the topside pad is not welded to the deck plate on the underside. | NA | |
| h) | Inspect the sealing system on the two-position legs and the vapor plugs in the fixed low leg for deterioration of the gaskets. | NA | |
| i) | On shell-mounted roof supports, check for adequate clearance based on the maximum floating roof movement as determined by the position of the roof relative to the gauge well and/or counter-rotational device. | NA | |
| C.2.9 | **Floating Roof Seal Assemblies** | NA | |
| C.2.9.1 | **Primary Shoe Assembly** | NA | |
| a) | Remove four sections of foam log (foam-filled seals) for inspection on 90° locations. | NA | |

SAMPLE OF COMPLETED UST INSPECTION CHECKLIST

| | Tank Out-of-service Inspection Checklist | | |
|---|---|---|---|
| | Item | Completed X | Comments |
| b) | Inspect hanger attachment to roof rim for thinning, bending, broken welds, and wear of pin holes. | NA | |
| c) | Inspect clips welded to roof rim for thinning. | NA | |
| d) | Shoes—inspect for thinning and holes in shoes. | NA | |
| e) | Inspect for bit-metal bolts, clips, and attachments. | NA | |
| f) | Seal fabric—inspect for deterioration, stiffening, holes, and tears in fabric. | NA | |
| g) | Measure length of fabric from top of shoe to roof rim, and check against maximum anticipated annular space as roof operates. | NA | |
| h) | Inspect any modification of shoes over shell nozzles, mixers, etc., for clearance. | NA | |
| i) | Inspect shoes for damage caused by striking shell nozzles, mixers, etc. | NA | |
| **C.2.9.2** | **Primary Toroidal Assembly** | NA | |
| a) | Inspect seal fabric for wear, deterioration, holes, and tears. | NA | |
| b) | Inspect hold-down system for buckling or bending. | NA | |
| c) | Inspect foam for liquid absorption and deterioration. | NA | |
| **C.2.9.3** | **Rim-mounted Secondaries** | NA | |
| a) | Inspect the rim-mounted bolting bar for corrosion and broken welds. | NA | |
| b) | Measure and chart seal-to-shell gaps. | NA | |
| c) | Visually inspect seam from below, looking for holes as evidenced by light. | NA | |
| d) | Inspect fabric for deterioration and stiffness. | NA | |
| e) | Inspect for mechanical damage, corrosion, and wear on tip in contact with shell. | NA | |
| f) | Inspect for contact with obstructions above top of shell. | NA | |
| **C.2.10** | **Floating Roof Appurtenances** | NA | |
| **C.2.10.1** | **Roof Manways** | NA | |
| a) | Inspect walls of manways for pitting and thinning. | NA | |
| b) | On tanks with interface autogauges, check seal around gauge tape cable and guide wires through manway cover. | NA | |
| c) | Inspect cover gasket and bolts. | NA | |
| **C.2.10.2** | **Rim Vent** | NA | |
| a) | Check rim vent for pitting and holes. | NA | |
| b) | Check vent for condition of screen. | NA | |
| c) | On floating roof tanks where the environmental rules require closing off the vent, check the vent pipe for corrosion at the pipe-to-rim joint and check that the blinding is adequate. | NA | |
| **C.2.10.3** | **Vacuum Breaker, Breather Type** | NA | |
| a) | Service and check operation of breather valve. | NA | |
| b) | Check that nozzle pipe projects no more than 1/2 in. below roof deck. | NA | |
| **C.2.10.4** | **Vacuum Breaker, Mechanical Type** | NA | |
| | Inspect the stem for thinning. Measure how far the vacuum breaker cover is raised off the pipe when the roof is resting on high or low legs. | NA | |
| a) | On high legs:_____. | NA | |
| b) | On low legs:_____. | NA | |
| **C.2.10.5** | **Roof Drains: Open Systems, Including Emergency Drains** | NA | NA=Not applicable/accessible |
| a) | Check liquid level inside open roof drains for adequate freeboard. Report if there is insufficient distance between liquid level and top of drain. | NA | |
| b) | If tank comes under Air Quality Monitoring District rules, inspect the roof drain vapor plug. | NA | |
| c) | If emergency drain is not at the center of the roof, check that there are at least three emergency drains. | NA | |
| **C.2.10.6** | **Closed Drain Systems: Drain Basins** | NA | NA=Not applicable/accessible |
| a) | Inspect for thinning and pitting. | NA | |
| b) | Inspect protective coating (topside). | NA | |
| c) | Inspect basin cover or screen for corrosion. | NA | |
| d) | Test operation of check valve. | NA | |

SAMPLE OF COMPLETED UST INSPECTION CHECKLIST

| | Tank Out-of-service Inspection Checklist | | |
|---|---|---|---|
| | Item | Completed X | Comments |
| e) | Check for presence of check valve where bottom of basin is below product level. | NA | |
| f) | Inspect drain basin(s) to roof deck welds for cracking. | NA | |
| g) | Check drain basin(s) outlet pipe for adequate reinforcement to roof deck (including reinforcing pad). | NA | |
| C.2.10.7 | **Closed Drain Systems: Fixed Drain Line on Tank Bottom** | | |
| a) | Hammer test fixed drain line on tank bottom for thinning and scale/debris plugging. | X | |
| b) | Inspect supports and reinforcing pads for weld failures and corrosion. | X | |
| c) | Check that pipe is guided, not rigidly locked to support, to avoid tearing of tank bottom plate. | X | |
| C.2.10.8 | **Closed Drain Systems: Flexible Pipe Drain** | NA | NA=Not applicable/accessible |
| a) | Inspect for damage to exterior of pipe. | NA | |
| b) | Check for obstructions that pipe could catch on. | NA | |
| c) | Inspect shields to protect pipe from snagging. | NA | |
| d) | Inspect results of hydrostatic test on flexible roof drain system. | NA | |
| C.2.10.9 | **Closed Drain Systems: Articulated Joint Drain** | NA | NA=Not applicable/accessible |
| a) | Hammer test rigid pipe in flexible joint systems for thinning and scale/debris plugging. | NA | |
| b) | Inspect system for signs of bending or strain. | NA | |
| c) | Inspect results of system hydrostatic test. | NA | |
| d) | Inspect landing leg and pad. | NA | |
| C.2.10.10 | **Autogauge System and Alarms** | NA | NA=Not applicable/accessible |
| a) | Check freedom of movement of tape through autogauge tape guide. | NA | |
| b) | Inspect sheaves for freedom of movement. | NA | |
| c) | Test operation checker. | NA | |
| d) | Inspect tape and tape cable for twisting and fraying. | NA | |
| e) | Test the tape's freedom of movement through guide sheaves and tape guide pipe. | NA | |
| f) | On open-top tanks, check that gate tapes with cables have no more than one foot of tape exposed with float at lowest point. | NA | |
| g) | Check float for leakage. | NA | |
| h) | Test float guide wire anchors for spring action by pulling on wire and releasing. | NA | |
| i) | Inspect floatwells in floating roofs for thinning and pitting of walls just above the liquid level. | NA | |
| j) | Check that the autogauge tape is firmly attached to the float. | NA | |
| k) | Inspect the tape cable and float guide wire fabric seals through the float well cover. | NA | |
| l) | Inspect the bottom guide wire attachment clip: inspect for a temporary weighted bar instead of a permanent welded down clip. | NA | |
| m) | Inspect board-type autogauge indicators for legibility and freedom of movement of indicator. | NA | |
| n) | Measure and record these distances to determine if seal damage will occur if tank is run over from: | NA | |
| 1) | Shell top angle to underside of tape guide system. | NA | |
| 2) | Liquid level on floating top to top of secondary seal. | NA | |
| o) | Identify floating roofs where the tape is connected directly to the roof. | NA | |
| p) | Overfill alarm: Inspect tank overfill prevention alarm switches for proper operation. | NA | |
| C.2.11 | **Common Tank Appurtenances** | | |
| C.2.11.1 | **Gauge Well** | NA | NA=Not applicable/accessible |
| a) | Inspect gate well pipe for thinning at about two-thirds distance above the bottom: look for thinning at the edge of the slots. | NA | |
| b) | Check for corrosion on the pipe joint. Check that sample cords, weights, thermometers, etc., have been removed from the pipe. | NA | |
| c) | Check for cone at bottom end of pipe about one foot above the bottom. | NA | |

SAMPLE OF COMPLETED UST INSPECTION CHECKLIST

| | Tank Out-of-service Inspection Checklist | | |
|---|---|---|---|
| | Item | Completed X | Comments |
| d) | Check condition of well washer pipe and that its flared end is directed at the near side of the hold off pad. | NA | |
| e) | Check that supports for gauge well are welded to pad or to shell and not directly to bottom plate. | NA | |
| f) | Check operation of gauge well cover. | NA | |
| g) | Check presence of a hold-off distance marker in well pipe and record hold-off distance. Hold-off distance_____. | NA | |
| h) | Identify and report size and pipe schedule, and whether pipe is solid or slotted. Report slot size. | NA | |
| i) | Check that the hold-off distance plate is seal-welded to the bottom and that any gauge well supports are welded to the plate and not directly to the bottom. | NA | |
| j) | Inspect vapor control float and cable. | NA | |
| k) | Check for presence and condition of gauge well washer. | NA | |
| l) | Check for bull plug or plate blind on gauge well washer valve. | NA | |
| m) | Inspect gauge well guide in floating roof for pitting and thinning. | NA | |
| n) | Inspect the guide rollers and sliding plates for freedom of movement. | NA | |
| o) | Inspect condition of gauge well pipe seal system. | NA | |
| p) | On black oil and diesel services: if gauge well is also used for sampling, check for presence of a thief- and gauge-type hatch to avoid spillage. | NA | |
| q) | Visually inspect inside of pipe for pipe weld protrusions which could catch or damage vapor control float. | NA | |
| **C.2.11.2** | **Sampling Systems: Roof Sample Hatches** | NA | NA=Not applicable/accessible |
| a) | Inspect roof-mounted sample hatches for reinforcing pads and cracking. | NA | |
| b) | Inspect cover for operation. | NA | |
| c) | For tanks complying with Air Quality Monitoring District rules, inspect sample hatch covers for adequate sealing. | NA | |
| d) | Check horizontal alignment of internal floating roof sample hatches under fixed roof hatches. | NA | |
| e) | Inspect the sealing system on the internal floating roof sample hatch cover. | NA | |
| f) | Inspect floating roof sample hatch cover recoil reel and rope. | NA | |
| **C.2.11.3** | **Shell Nozzles** | | |
| a) | Inspect shell nozzles for thinning and pitting. | X | See inspection report |
| b) | Inspect hot tap nozzles for trimming of holes. | X | See inspection report |
| c) | Identify type of shell nozzles. | X | See inspection report |
| d) | Identify and describe internal piping, including elbow-up and elbow-down types. | X | See inspection report |
| **C.2.11.4** | **For Nozzles Extended Into the Tank** | | |
| a) | Inspect pipe support pads welded to tank bottom. | X | See inspection report |
| b) | Inspect to see that pipe is free to move along support without strain or tearing action on bottom plate. | X | See inspection report |
| c) | Inspect nozzle valves for packing leaks and damaged flange faces. | X | See inspection report |
| d) | Inspect heater stream nozzle flanges and valves for wire cutting. | X | See inspection report |
| e) | Report which nozzles have thermal pressure relief bosses and valves. | X | See inspection report |
| f) | In internal elbow-down fill line nozzles, inspect the wear plate on the tank bottom. | X | See inspection report |
| g) | On elbow-up fill lines in floating roof tanks, check that opening is directed against underside of roof, not against vapor space. Inspect impact are for erosion. | X | See inspection report |
| **C.2.11.5** | **Diffusers and Air Rolling Systems** | NA | NA=Not applicable/accessible |
| a) | Inspect diffuser pipe for erosion and thinning. | NA | |
| b) | Check holes in diffuser for excessive wear and enlargement. | NA | |
| c) | Inspect diffuser supports for damage and corrosion. | NA | |
| d) | Check that diffuser supports restrain, not anchor, longitudinal line movement. | NA | |
| e) | Inspect air spiders on bottom of lube oil tanks for plugging and damaged or broken threaded joints. | NA | |
| **C.2.11.6** | **Swing Lines** | NA | NA=Not applicable/accessible |

SAMPLE OF COMPLETED UST INSPECTION CHECKLIST

| | Tank Out-of-service Inspection Checklist | | |
|---|---|---|---|
| | Item | Completed X | Comments |
| a) | Inspect flexible joint for cracks and leaks. | NA | |
| b) | Scribe the flexible joint across the two moving faces and raise end of swing line to check the joint's freedom of movement, indicated by separation of scribe marks. | NA | |
| c) | Check that flexible joints over 6 in. are supported. | NA | |
| d) | Inspect the swing pipe for deep pitting and weld corrosion. | NA | |
| e) | Loosen the vent plugs in the pontoons and listen for a vacuum. Lack of a vacuum indicates a leaking pontoon. | NA | |
| f) | Check the results of air test on pontoons during repairs. | NA | |
| g) | Inspect the pontoons for pitting. | NA | |
| h) | Inspect the pull-down cable connections to the swing. | NA | |
| i) | Inspect the condition of the bottom-mounted support, fixed roof limiting bumper, or shell-mounted limiting bumper for wood condition, weld and bolt corrosion, and seal welding to bottom or shell. | NA | |
| j) | Inspect safety hold-down chain for corrosion and weak links. | NA | |
| k) | Check that there is a welded reinforcing pad where the chain connects to the bottom. | NA | |
| l) | If the floating swing in a floating or internal floating roof tank does not have a limiting device preventing the swing from exceeding 60 degrees, measure and calculate the maximum angle possible with the roof on overflow.<br>Max. angle on overflow_____.<br>(If the calculated angle exceeds 65 degrees, recommended installation of a limiting bracket.) | NA | |
| m) | Inspect pull-down cable for fraying. | NA | |
| n) | Inspect for three cable clamps where cable attaches to end of swing line (single-reeved) or to roof assembly (double-reeved). Inspect sheaves for freedom of movement. | NA | |
| o) | Inspect winch operation and check the height indicator for legibility and accuracy. | NA | |
| p) | Inspect bottom-mounted sheave assembly at end of pontoon for freedom of rotation of sheave. | NA | |
| q) | Inspect shell-mounted lower sheave assembly for freedom of rotation of sheave, corrosion thinning, and pitting of sheave housing. | NA | |
| r) | Inspect upper sheave assembly for freedom of movement of sheave. | NA | |
| s) | Inspect the cable counterbalance assembly for corrosion and freedom of operation. | NA | |
| **C.2.11.7** | **Manway Heater Racks** | NA | NA=Not applicable/accessible |
| a) | Inspect the manway heater racks for broken welds and bending of the sliding rails. | NA | |
| b) | Measure and record the length of the heater and length of the track. | NA | |
| **C.2.11.8** | **Mixer Wear Plates and Deflector Stands** | NA | NA=Not applicable/accessible |
| a) | Inspect bottom and shell plates and deflector stands. | NA | |
| b) | Inspect for erosion and corrosion on the wear plates. Inspect for rigidity, structural soundness, corrosion, and erosion of deck plates and reinforcing pads that are seal-welded to the bottom under the deflector stand legs. | NA | |
| c) | Measure for propeller clearance between the bottom of deflector stand and roof when the roof is on low legs. | NA | |
| **C.2.12** | **Access Structures** | | |
| **C.2.12.1** | **Handrails** | X | See inspection report |
| a) | Identify and report type (steel pipe, galvanized pipe, square tube, angle) and size of handrails. | X | |
| b) | Inspect for pitting and holes, paint failure. | X | |
| c) | Inspect attachment welds. | X | |
| d) | Identify cold joints and sharp edges. Inspect the handrails and midrails. | X | |
| e) | Inspect safety drop bar (or safety chain) for corrosion, functioning, and length. | X | |
| f) | Inspect the handrail between the rolling ladder and the gaging platform for a hazardous opening when the floating roof is at its lowest level. | X | |
| **C.2.12.2** | **Platform Frame** | X | See inspection report |
| a) | Inspect frame for corrosion and paint failure. | X | |

SAMPLE OF COMPLETED UST INSPECTION CHECKLIST

| | Tank Out-of-service Inspection Checklist | | |
|---|---|---|---|
| | Item | Completed X | Comments |
| b) | Inspect the attachment of frame to supports and supports to tank for corrosion and weld failure. | X | |
| c) | Check reinforcing pads where supports are attached to shell or roof. | X | |
| d) | Inspect the surface that deck plate or grating rests on, for thinning and holes. | X | |
| e) | Check that flat-surface-to-flat-surface junctures are seal-welded. | X | |
| C.2.12.3 | **Deck Plate and Grating** | X | See inspection report |
| a) | Inspect deck plate for corrosion-caused thinning or holes (not drain holes) and paint failure. | X | |
| b) | Inspect plate-to-frame weld for rust scale buildup. | X | |
| c) | Inspect grating for corrosion-caused thinning of bars and failure of welds. | X | |
| d) | Check grating tie down clips. Where grating has been retrofitted to replace plate, | X | |
| | measure the rise of the step below and above the grating surface and compare with other risers on the stairway. | X | |
| C.2.12.4 | **Stairway Stringers** | NA | NA=Not applicable/accessible |
| a) | Inspect spiral stairway stringers for corrosion, paint failure, and weld failure. Inspect attachment of stairway treads to stringer. | NA | |
| b) | Inspect stairway supports to shell welds and reinforcing pads. | NA | |
| c) | Inspect steel support attachment to concrete base for corrosion. | NA | |
| C.2.12.5 | **Rolling Ladder** | NA | NA=Not applicable/accessible |
| a) | Inspect rolling ladder stringers for corrosion. | NA | |
| b) | Identify and inspect ladder fixed rungs (square bar, round bar, angles) for weld attachment to stringers and corrosion, particularly where angle rungs are welded to stringers. | NA | |
| c) | Check for wear and corrosion where rolling ladder attaches to gaging platform. | NA | |
| d) | Inspect pivot bar for wear and secureness. | NA | |
| e) | Inspect operation of self-leveling stairway treads. | NA | |
| f) | Inspect for corrosion and wear on moving parts. | NA | |
| g) | Inspect rolling ladder wheels for freedom of movement, flat spots, and wear on axle. | NA | |
| h) | Inspect alignment of rolling ladder with roof rack. | NA | |
| i) | Inspect top surface of rolling ladder track for wear by wheels to assure at least 18 in. of unworn track (track long enough). | NA | |
| j) | Inspect rolling ladder track welds for corrosion. | NA | |
| k) | Inspect track supports on roof for reinforcing pads seal-welded to deck plate. | NA | |
| l) | Check by dimensioning, the maximum angle of the rolling ladder when the roof is on low legs. | NA | |
| m) | If rolling ladder track extends to within 5 ft of the edge of the roof on the far side, check for a handrail on the top of the shell on that side. | NA | |
| NOTES - | | | |
| | | | |
| | | | |
| | | | |
| | | | |

# Appendix C

## *Work Plan/*Sampling and Analysis Plan
## *(October 2012)*

## Work Plan/Sampling and Analysis Plan

# Long-Term Groundwater and Soil Vapor Monitoring

## Red Hill Bulk Fuel Storage Facility
## Joint Base Pearl Harbor-Hickam, Oahu, Hawaii

**DOH Facility ID: 9-102271**
**DOH Release ID: 990051, 010011, and 020028**

**October 2012**

**Department of the Navy**
**Naval Facilities Engineering Command, Hawaii**
**400 Marshall Road**
**JBPHH, HI 96860-3139**

NAVFAC
Naval Facilities Engineering Command
NAVFAC HAWAII

**Contract Number N62742-12-D-1853, CTO 0002**

*This Page Intentionally Left Blank.*

## Work Plan/Sampling and Analysis Plan

# Long-Term Groundwater and Soil Vapor Monitoring

## Red Hill Bulk Fuel Storage Facility
## Joint Base Pearl Harbor-Hickam, Oahu, Hawaii

**DOH Facility ID: 9-102271**
**DOH Release ID: 990051, 010011, and 020028**

**October 2012**

Prepared for:

**Department of the Navy**
**Naval Facilities Engineering Command, Hawaii**
**400 Marshall Road**
**JBPHH, HI 96860-3139**

Prepared by:

**Environmental Science International, Inc.**
**354 Uluniu Street, Suite 304**
**Kailua, HI 96734**

Prepared under:

**Contract Number N62742-12-D-1853, CTO 0002**

*This Page Intentionally Left Blank.*

# DRAFT WORK PLAN AND SAMPLING AND ANALYSIS PLAN
# RED HILL BULK FUEL STORAGE FACILITY

Long-Term Groundwater and Soil Vapor Monitoring
Red Hill Bulk Fuel Storage Facility
Joint-Base Pearl Harbor-Hickam, Oahu, Hawaii

**Prepared for:**
Department of the Navy
Commanding Officer, Naval Facilities Engineering Command, Hawaii
400 Marshall Road
JBPHH, HI 96860-3139

**Prepared by:**
Environmental Science International, Inc.
354 Uluniu Street, Suite 304
Kailua, HI 96734
(808) 261-0740

**Prepared under:**
Contract Number: N62742-12-D-1853
Contract Task Order: 0002

Approval Signature: _____
Darren Uchima, Navy Technical Representative Date

Approval Signature: _____
Robert Chong, ESI Project Manager Date

Approval Signature: _____
Iris van de Zander, ESI QA Manager Date



ED_006532_00011133-00082

***This Page Intentionally Left Blank.***



ED_006532_00011133-00083

# TABLE OF CONTENTS

Acronyms and Abbreviations ..... xi

**1. INTRODUCTION ..... 1-1**
1.1 Project Scope and Objectives ..... 1-1
1.2 Location Settings ..... 1-1
1.3 Site History ..... 1-3
1.3.1 Previous Environmental Activities ..... 1-3
1.4 Regulatory Requirements ..... 1-5

**2. PROJECT ORGANIZATION ..... 2-1**
2.1 Role and Responsibilities ..... 2-1
2.1.1 Navy Operations Manager ..... 2-2
2.1.2 Project Manager ..... 2-2
2.1.3 Field Manager ..... 2-2
2.1.4 Site Safety and Health Officer ..... 2-2
2.1.5 Chemist ..... 2-2
2.1.6 QA Manager ..... 2-3
2.1.7 Subcontractors ..... 2-3
2.2 Planning ..... 2-3
2.3 Permitting ..... 2-3
2.4 Project Schedule ..... 2-4
2.5 Health and Safety Requirements ..... 2-4

**3. SAMPLING AND ANALYSIS PLAN ..... 3-1**
3.1 Groundwater Sampling and Analysis ..... 3-1
3.1.1 Purging ..... 3-1
3.1.2 Sample Collection ..... 3-2
3.1.3 Sample Analysis ..... 3-2
3.1.4 Sampling Equipment ..... 3-3
3.1.5 Sample Containers ..... 3-3
3.1.6 Sample Preservation ..... 3-4
3.1.7 Sample Labeling ..... 3-5
3.1.8 Sample Handling and Shipping ..... 3-5
3.2 Soil Vapor Monitoring ..... 3-5
3.2.1 Monitoring Procedures ..... 3-6
3.2.2 Soil Vapor Monitoring Equipment ..... 3-7
3.3 Fuel Product Monitoring ..... 3-7
3.4 Decontamination Procedures ..... 3-8
3.5 Field Documentation ..... 3-8
3.6 Management and Disposal of IDW ..... 3-8



ED_006532_00011133-00084

**4. QUALITY ASSURANCE PROJECT PLAN ..... 4-1**
4.1 Summary of the Data Quality Objectives Process ..... 4-1
4.1.1 Statement of the Problem ..... 4-1
4.1.2 Identify the Goals of the Study ..... 4-1
4.1.3 Identify the Information ..... 4-1
4.1.4 Define the Boundaries of the Study ..... 4-2
4.1.5 Develop the Analytical Approach ..... 4-2
4.1.6 Specify Performance Acceptance Criteria ..... 4-2
4.1.7 Develop the Plan for Obtaining Data ..... 4-2
4.2 QA/QC Sampling and Sample Handling Procedures ..... 4-3
4.2.1 Sample Collection Method ..... 4-3
4.2.2 Field QC Samples ..... 4-3
4.2.3 Sample Containers ..... 4-3
4.2.4 Sample Labeling ..... 4-4
4.2.5 Field Instrument Calibration/Documentation ..... 4-4
4.3 Laboratory Requirements ..... 4-4
4.3.1 Project Analytes ..... 4-4
4.3.2 Reporting Limits ..... 4-5
4.4 Analytical Data Quality Review ..... 4-5
4.4.1 Accuracy ..... 4-5
4.4.2 Precision ..... 4-6
4.4.3 Completeness ..... 4-6
4.4.4 Representativeness ..... 4-6
4.4.5 Comparability ..... 4-6
4.4.6 Sensitivity ..... 4-7
4.5 Data Reporting and Documentation ..... 4-7
4.6 Oversight and Assessment ..... 4-7
4.7 Corrective Action ..... 4-7
4.7.1 Field Corrective Action ..... 4-8
4.7.2 Laboratory Corrective Action ..... 4-9
4.7.3 Corrective Action Following Data Assessment ..... 4-9
**5. REFERENCES ..... 5-1**

# LIST OF FIGURES

**Figures**

Figure 1 Site Location Map
Figure 2 Site Layout



ED_006532_00011133-00085

# LIST OF TABLES

**Tables**

Table 1-1 USTs at the Red Hill Bulk Fuel Storage Facility ..... 1-2
Table 2-1 Key Personnel ..... 2-1
Table 3-1 Groundwater Sampling and Analysis Program ..... 3-3
Table 3-2 Groundwater Sample Containers, Preservative, and Holding Times ..... 3-4

# LIST OF APPENDICES

**Appendix**

A Project Schedule
B Field Forms
C Standard Operating Procedures
D Table of DOH EALs



ED_006532_00011133-00086

***This Page Intentionally Left Blank.***



ED_006532_00011133-00087

# ACRONYMS AND ABBREVIATIONS

| ACRONYMS/ ABBREVIATIONS | DEFINITION/MEANING |
|---|---|
| amsl | above mean sea level |
| bgs | below ground surface |
| CERCLA | Comprehensive Environmental Response, Compensation, and Liability Act of 1980 |
| CFR | Code of Federal Regulations |
| COC | Chain of Custody |
| COPCs | Contaminants of Potential Concern |
| DLNR | State of Hawaii Department of Land and Natural Resources |
| DOH | State of Hawaii Department of Health |
| DoD | Department of Defense |
| DoN | Department of the Navy |
| DQO | data quality objectives |
| EAL | Environmental Action Level |
| EPA | U.S. Environmental Protection Agency |
| ESI | Environmental Science International |
| F-76 | marine diesel fuel |
| FISC | Fleet and Industrial Supply Center |
| FM | Field Manager |
| GPS | global positioning system |
| HAR | Hawaii Administrative Rules |
| HDMW | Halawa Deep monitoring well |
| HEER | Hazard Evaluation and Emergency Response |
| HPWS | Hawaii rules relating to potable water systems |
| HSP | Health and Safety Plan |
| HSWA | Hazardous and Solid Waste Amendments |
| ID | Identification |
| IDW | Investigation-derived waste |
| JBPHH | Joint Base Pearl Harbor-Hickam |
| JP-5 | Jet Fuel Propellant-5 |
| JP-8 | Jet Fuel Propellant-8 |
| LCS | laboratory control samples |
| LD | laboratory duplicate |
| LNAPL | Light non-aqueous phase liquid |
| LOD | limit of detection |
| LOQ | limit of quantitation |
| LTM | long-term groundwater and soil vapor monitoring |
| MDL | method detection limit |
| ml | milliliters |
| ml/min | milliliters per minute |
| MCL | maximum contaminant level |
| MS | matrix spike |
| MSD | matrix spike duplicate |
| NAVFAC | Naval Facilities Engineering Command |
| NAVSUP FLC | Naval Supply Systems Command Fleet Logistics Center |
| NIRIS | Naval Installation Restoration Information System |



ED_006532_00011133-00088

| | |
|---|---|
| NPDW | National Primary Drinking Water Act |
| ACRONYMS/ ABBREVIATIONS | DEFINITION/MEANING |
| NTR | Navy Technical Representative |
| OSHA | Occupational Safety and Health Administration |
| OWDF | Oily Waste Disposal Facility |
| PAHs | polycyclic aromatic hydrocarbons |
| PAL | Project Action Level |
| pH | hydrogen activity |
| PID | photo-ionization detector |
| PM | Project Manager |
| ppbv | parts per billion by volume |
| PPE | personal protective equipment |
| PM | Project Manager |
| QA | Quality Assurance |
| QA/QC | Quality Assurance/ Quality Control |
| QAPP | Quality Assurance Project Plan |
| QC | Quality Control |
| QSM | Quality Systems Manual |
| RCRA | Resource Conservation and Recovery Act |
| RHSF | Red Hill Bulk Fuel Storage Facility |
| RI/FS | Remedial Investigation/Feasibility Survey |
| RPD | relative percent difference |
| SAP | Sampling and Analysis Plan |
| SDWA | Safe Drinking Water Act |
| SSHO | Site Safety and Health Officer |
| SVMP | Soil Vapor Monitoring Point |
| TEC | The Environmental Company, Inc. |
| TPH | Total petroleum hydrocarbons |
| TPH-DRO | Total petroleum hydrocarbons-diesel range organics |
| TPH-GRO | Total petroleum hydrocarbons-gasoline range organics |
| US | United States |
| USACE | United States Army Corp of Engineers |
| UST | Underground storage tank |
| VOA | Volatile Organic Analysis |
| VOCs | Volatile Organic Compounds |
| WP/SAP | Work Plan/Sampling and Analysis Plan |



ED_006532_00011133-00089

# 1. INTRODUCTION

This Work Plan (WP) and Sampling and Analysis Plan (SAP) describes the objectives and methodology for performing long-term groundwater and soil vapor monitoring (LTM) at the Red Hill Bulk Fuel Storage Facility (RHSF), Joint Base Pearl Harbor-Hickam (JBPHH), Hawaii, hereafter referred to as the "Site." The Site is part of the JBPHH and is located in Halawa Heights on the Island of Oahu (Figure 1). The State of Hawaii Department of Health (DOH) Facility I.D. number for the Site is 9-102271. The DOH Release I.D. numbers are 990051, 010011, and 020028.

Environmental Science International (ESI) has prepared these documents for Naval Facilities Engineering Command (NAVFAC) Hawaii, under Contract Task Order (CTO) 002 of NAVFAC Pacific, Contract No. N62742-12-D-1853.

## 1.1 Project Scope and Objectives

The objective of this project is to continue performing LTM to monitor petroleum-related contamination in soil and groundwater at the RHSF. A total of twelve quarterly groundwater monitoring events and 35 monthly soil vapor and fuel product monitoring events will be performed from October 2012 to August 2015. The data from LTM will be used to make decisions regarding fuel-related contamination at RHSF.

## 1.2 Location Settings

The RHSF is located on the island of Oahu, Hawaii, approximately 2.5 miles northeast of Pearl Harbor in Halawa Heights (Figure 1). The RHSF is located on a low ridge on the western edge of the Koolau Mountain Range that divides Halawa Valley from Moanalua Valley. The RHSF is bordered on the north by Halawa Correctional Facility and private businesses, on the west by the U.S. Coast Guard reservation, on the south by residential neighborhoods, and on the east by Moanalua Valley. A quarry is located less than a quarter mile away to the northwest. The RHSF occupies 144 acres of land and the majority of the Site is at an elevation of approximately 200 to 500 feet above mean sea level (amsl). LTM will be primarily conducted in the underground tunnels, which are located between 100 to 120 feet amsl. Two groundwater monitoring wells (the Halawa Deep Monitoring Well (HDMW) 2253-03 and OWDFMW01) are located outside of the RHSF tunnel system. Monitoring well HDMW2253-03 is located within the Halawa Correctional Facility at a elevation of 200 feet amsl. OWDFMW01 is located on the southern portion of the RHSF at a elevation of 130 feet amsl.

The RHSF contains 18 active and 2 inactive underground storage tanks (USTs), which are operated by Naval Supply Fleet Logistics Center (NAVSUP FLC) Pearl Harbor (formerly Fleet and Industrial Supply Center [FISC]). Each UST has a capacity of approximately 12.5 million gallons. The RHSF is located approximately 100 feet above the basal aquifer. The current status of the USTs are summarized in Table 1.1.



ED_006532_00011133-00090

**TABLE 1.1**
**Current Status of the USTs**
**Long-Term Groundwater and Soil Vapor Monitoring**
**Red Hill Bulk Fuel Storage Facility**

| Tank Identification | Fuel Type | Status | Capacity |
|---|---|---|---|
| F-1 | None | Inactive | 12.5 million gallons |
| F-2 | JP-8 | Active | 12.5 million gallons |
| F-3 | JP-8 | Active | 12.5 million gallons |
| F-4 | JP-8 | Active | 12.5 million gallons |
| F-5 | JP-8 | Active | 12.5 million gallons |
| F-6 | JP-8 | Active | 12.5 million gallons |
| F-7 | JP-5 | Active | 12.5 million gallons |
| F-8 | JP-5 | Active | 12.5 million gallons |
| F-9 | JP-5 | Active | 12.5 million gallons |
| F-10 | JP-5 | Active | 12.5 million gallons |
| F-11 | JP-5 | Active | 12.5 million gallons |
| F-12 | JP-5 | Active | 12.5 million gallons |
| F-13 | F-76 | Active | 12.5 million gallons |
| F-14 | F-76 | Active | 12.5 million gallons |
| F-15 | F-76 | Active | 12.5 million gallons |
| F-16 | F-76 | Active | 12.5 million gallons |
| F-17 | JP-5 | Active | 12.5 million gallons |
| F-18 | JP-5 | Active | 12.5 million gallons |
| F-19 | None | Inactive | 12.5 million gallons |
| F-20 | JP-5 | Active | 12.5 million gallons |

JP-5 and JP-8 Jet Fuel Propellant
F-76 Marine Diesel Fuel

Current zoning information obtained from the City and County of Honolulu Department of Planning and Permitting indicates that the RHSF is located on federal government land (zoned F1- Military and Federal).

A total of seven monitoring wells are included in the current monitoring program (Figure 2). Five groundwater monitoring wells (RHMW01, RHMW02, RHMW03, RHMW05, and RHMW2254-01) are located within the RHSF. Two groundwater monitoring wells (HDMW2253-03 and OWDFMW01) are located outside of the RHSF tunnel system.

Monitoring wells RHMW01, RHMW02, RHMW03, and RHMW05 are located inside the underground tunnels. Monitoring well RHMW2254-01 is located inside the infiltration gallery of the Department of the Navy (DoN) well 2254-01. Well 2254-01 is located approximately 3,000 feet downgradient of the USTs and provides approximately 24 percent of the potable water to the Pearl Harbor System, which serves approximately 52,200 military customers. NAVFAC Public Works Department operates a potable filtration tunnel approximately 1,550 feet hydraulically downgradient from the USTs.

Monitoring well HDMW2253-03 is located within the Halawa Correctional Facility. Monitoring well HDMW2253-03 is located between the RHSF and the municipal drinking water supply well run by the City and County of Honolulu Board of Water Supply. Special permission is required from the Halawa Correctional Facility administration and the State of



ED_006532_00011133-00091

Hawaii Department of Land and Natural Resources (DLNR) for access to the well. The well is controlled by the State of Hawaii Commission on Water Resource Management.

Well OWDFMW01 is located southeast of the Oily Waste Disposal Facility (OWDF) and on the western most portion of the RHSF (Figure 2).

## 1.3 Site History

The RHSF was constructed by the U.S. Government in the early 1940s. Twenty USTs and a series of tunnels were constructed. The USTs were constructed of steel and they currently contain jet fuel propellant (JP-5 and JP-8) and marine diesel fuel (F-76). Several tanks in the past have stored DoN special fuel oil, DoN distillate, aviation gasoline, and motor gasoline (Environet, 2010). The fueling system is a self-contained underground unit that was installed into native rock comprised primarily of basalt with some interbedded tuffs and breccias (Environet, 2010). Each UST measures approximately 245 feet in height and 100 feet in diameter. The upper domes of the tanks lie at a depth varying between 100 feet and 200 feet below ground surface (bgs).

### *1.3.1 Previous Environmental Activities*

This section describes previous environmental activities conducted at the RHSF since the late 1990's (when the facility was declassified) to the present.

In 1998, Earth Tech conducted a Phase II remedial investigation/feasibility study (RI/FS) for the OWDF. The study involved installing well OWDFMW01 (which was originally MW08) (Earth Tech, 1999).

In February 2001, the DoN installed groundwater monitoring well RHMW01 to monitor for contamination in the basal aquifer beneath the RHSF. Well RHMW01 was installed approximately 100 feet below grade within the lower access tunnel. The depth to water was measured at 86 feet below grade at the time of the well completion. Total petroleum hydrocarbons (TPHs) and lead were detected in groundwater samples collected from RHMW01 in February 2001. Lead was detected at a concentration above the DOH groundwater Tier 1 Environmental Action Level (EAL) (TEC, 2009; DOH, 2000).

In February 2005, the DoN began quarterly groundwater sampling at two monitoring wells (RHMW01 and RHMW2254-01). Lead was detected at concentrations above the DOH EAL, but the samples were not filtered. The analytical results were not considered appropriate for risk evaluation because the samples were not filtered.

Between June and September 2005, The Environmental Company (TEC) installed three groundwater monitoring wells (RHMW02, RHMW03, and RHMW04) within the RHSF UST system (Environet, 2012b). Well RHMW04 was installed upgradient of the USTs to provide geochemistry information for water moving through the basal aquifer beneath the RHSF. Wells RHMW02 and RHMW03 were installed approximately 125 feet below grade within the RHSF UST system and well RHMW04 was installed approximately 300 feet bgs outside of the RHSF tunnels. In September 2005, the five groundwater monitoring wells were sampled. Napthalene and trichloroethylene were detected at concentrations above the DOH EALs in the sample collected from RHMW02.



ED_006532_00011133-00092

In 2006, TEC installed dedicated sampling pumps in five wells (wells RHWM01, RHWM02, RHMW03, RHWM04,and RHMW2254-01). In July 2006, napthalene was detected at a concentration above the DOH EAL in the sample collected from well RHMW02.

In December 2006, groundwater samples were collected from the five monitoring wells. The groundwater samples were analyzed for petroleum constituents. TPH as diesel range organics (TPH-DRO) was detected above the DOH EALs in the sample collected from well RHMW01. TPH as gasoline range organics (TPH-GRO), TPH-DRO, and naphthalene were detected at concentrations above the DOH EALs in the sample collected from well RHMW02.

In 2007, TPH-DRO, TPH-GRO, and naphthalene were detected at concentrations above the DOH EALs in samples collected from monitoring wells located within the RHSF. 1-methylnapthalene, and 2-methylnapthlene were detected at concentrations above the DOH EALs in samples collected from RHMW02.

In 2008, due to increasing concentrations of contaminants of potential concern (COPC) in the monitoring wells located within the RHSF, groundwater monitoring wells HDMW2253-03 and OWDFMW01 were included in the quarterly groundwater sampling. TPH-DRO was detected at concentrations above the DOH EALs in samples collected from wells RHMW01, RHMW02, and RHMW03 for all four sampling events. TPH-GRO, naphthalene, 1-methylnapthalene, and 2-methylnapthlene were detected at concentrations above the DOH EALs in the samples collected from well RHMW02 for all four sampling events.

In April 2009, groundwater monitoring well RHMW05 was installed downgradient of the USTs, within the lower access tunnel between RHMW01 and RHMW2254-01. It was installed to identify the extent of contamination downgradient of the USTs.

During the quarterly groundwater monitoring events in 2009, TPH-DRO was detected at concentrations above the DOH EALs in samples collected from wells RHMW01, RHMW02, RHMW03, RHMW05, and OWDFMW01. Naphthalene, 1-methylnapthalene, and 2-methylnapthlene were detected at concentrations above the DOH EALs in samples collected from well RHMW02. None of the other COPCs were detected at concentrations above the DOH EALs.

During the quarterly groundwater monitoring events in 2010, TPH-DRO was detected at concentrations above the DOH EALs in samples collected from wells RHMW01, RHMW02, RHMW03, and RHMW05. TPH-GRO, napthalene, and 1-methylnapthalene were detected at concentrations above the DOH EALS in samples collected from well RHMW02. None of the other chemical constituents were detected at concentrations above the DOH EALs.

During the quarterly groundwater monitoring events in 2011, TPH-DRO was detected at concentrations above the DOH EALs in the samples collected from wells RHMW01 and RHMW02. Napthalene and 1-methylnapthalene were detected at concentrations above the DOH EALS in the samples collected from well RHMW02. None of the other chemical constituents were detected at concentrations above the DOH EALs.

During the first three quarters of groundwater monitoring in 2012, TPH-DRO was detected at concentrations above the DOH EALs in samples collected from wells RHMW01 and RHMW02. During the third quarter sampling, naphthalene and 1-methylnapthalene were detected at concentrations equal to the DOH EALs in samples collected from well RHMW02. None of the other chemical constituents were detected at concentrations above the DOH EALs (Environet, 2012b and 2012c).

## 1.4 Regulatory Requirements

LTM will be completed in compliance with applicable federal regulations, including, the Resource Conservation and Recovery Act (RCRA) and Title 29 of the Code of Federal Regulations (CFR) describing Occupational Safety and Health Standards. Based on the history of the Site, the State and Federal regulatory requirements that apply to the RHSF include the following:

- Safe Drinking Water Act (SDWA) and National Primary Drinking Water Act (NPDW); the NPDW regulations are located in 40 CFR Part 141 and the regulations implement the provisions of the SDWA. They establish the maximum contaminant levels (MCLs) for various substances in potable water.
- Hawaii Rules Relating to Public Water Systems (HPWS) – The DOH HPWS (Hawaii Administrative Rules (HAR) Title 11, Chapter 20) sets forth the MCLs of certain chemicals in public and private drinking water systems. These MCLs are analogous to those in the NPDW regulations.
- State of Hawaii UST Regulations (HAR, Title 19, Chapter 342L and HAR, Title 11, Chapter 281). Owners and operators of USTs that contain regulated substances such as petroleum are required to take specific actions when investigating releases from their USTs. Regulations and requirements are explained in detail in the Technical Guidance Manual for Underground Storage Tank Closure and Release Response (DOH, 2000).



ED_006532_00011133-00094

***This Page Intentionally Left Blank***



ED_006532_00011133-00095

# 2. PROJECT ORGANIZATION

This section provides a summary of the key project personnel, subcontractors, and the project organizational structure.

## 2.1 Role and Responsibilities

Having a clear understanding of each individual and organization's role and responsibilities will be instrumental in the completion of this project. Key personnel and organizations for this project are included in Table 2.1.

**TABLE 2.1**
**Key Personnel**
**Long-Term Groundwater and Soil Vapor Monitoring**
**Red Hill Bulk Fuel Storage Facility**

| Title | Project Personnel | Contact Information |
|---|---|---|
| Navy Technical Representative (NTR) | Darren Uchima | (808)471-1171 ext.217<br>Darren.Uchima@navy.mil |
| Navy Operations Manager | Scott Simmons | (808)864-3254<br>ssimmons@esciencei.com |
| Project Manager | Robert Chong | (808)479-5217<br>rchong@esciencei.com |
| Field Manager | Justin Lam | (808)216-1653<br>jlam@esciencei.com |
| Site Safety and Health Officer | Branden Ibara | (808)349-0384<br>bibara@esciencei.com |
| Chemist | Traci Sylva | (808)285-1795<br>tsylva@esciencei.com |
| QA Manager | Iris van der Zander | (808)561-5357<br>izander@esciencei.com |
| Calscience Environmental Laboratories | Richard Villafania | (714)895-5494<br>rvillafania@calscience.com |
| Pacific Commercial Services | Jingbo Chang | (808) 545-4599<br>Jingbo.Chang@pcshi.com |
| DLNR Commission on Water Resource Management | Jeremy Kimura | (808) 587-0269<br>Jeremy.l.kimura@hawaii.gov |
| Halawa Correctional Facility Administration | Faye Yap | (808) 483-5221<br>faye.tyap@hawaii.gov |

This organizational structure is designed to ensure that all personnel involved with the project will receive proper instructions and information. Appropriate quality assurance (QA) procedures will be followed. The roles and responsibilities of the key personnel are included below.



ED_006532_00011133-00096

### 2.1.1 Navy Operations Manager

The Navy Operations Manager oversees the ESI Navy Program and is responsible for providing strategic and technical guidance for all DoN projects. The Operations Manager is responsible for ensuring compliance with CERCLA, RCRA, Toxic Substances Control Act, National Pollutant Discharge Elimination System, and SDWA regulations, their state counterparts, and other applicable or relevant and appropriate requirements. The Operations Manager has the authority to act on behalf of the QA Manager on site-related issues affecting the quality of the work performed.

### 2.1.2 Project Manager

The Project Manager (PM) is responsible for the overall management of the project and reports to the Navy Operations Manager. The PM is responsible for the daily operations of the project and ensuring daily activities are conducted in accordance with the project scope and within contract terms and conditions. The PM will provide management and direction to the project personnel assigned to the project. The PM is also responsible for coordination with the NTR.

### 2.1.3 Field Manager

The Field Manager (FM) reports to the PM and will be responsible for the management of site activities and personnel. The FM is responsible for the following: supervising the site personnel, coordinating with office personnel, subcontractors, and vendors, ensuring completion of the project in accordance with the contract documents, applicable codes and standards, ensuring compliance with environmental, health, and safety requirements, including corporate, Occupational Safety and Health Administration (OSHA), and any client-specific requirements, and ensuring compliance with corporate policies, programs, and procedures applicable to the project.

### 2.1.4 Site Safety and Health Officer

The Site Safety and Health Officer (SSHO) has responsibility and authority to implement the Site-Specific Health and Safety Plan (HSP), and to verify compliance. The SSHO has the authority to halt site work if unsafe conditions are detected. The specific responsibilities of the SSHO include managing the safety and health functions on-site; serving as the project's Point of Contact for safety and health matters; ensuring site monitoring, worker training, and effective selection and use of personal protective equipment (PPE); assessing site conditions for unsafe acts and conditions and providing corrective action; maintaining effective safety and health records as described in the HSP; coordinating with the PM and others as necessary for safety and health efforts.

### 2.1.5 Chemist

The Project Chemist, or designated alternate, is responsible for reviewing analytical data to ensure that the data meet the data quality objectives for the project. Upon receipt of analytical data, the chemist, or designated alternate, will perform a check to verify that contract deliverables have been met; will perform a review of sample custody, receipt conditions, and holding times; and will perform a review of sample results (including limits of quantitation and results for field duplicates).



ED_006532_00011133-00097

The Project Chemist will be responsible for communicating any deviations from the WP/SAP to the PM. The chemist will work with the PM to make any decisions based on laboratory Quality Assurance/Quality Control (QA/QC) issues.

### *2.1.6 QA Manager*

The QA Manager is responsible for implementing and maintaining the QA program; monitoring QA activities to ensure conformance with authorized policies, procedures, and sound practices; conduct meetings with site personnel covering the QA procedures and requirements, as appropriate; identifying and resolving non-conformances in accordance with the requirements of applicable procedures and policies; monitoring corrective action documentation for conditions adverse to quality; tracking and verifying implementation of corrective actions; providing closeout documentation upon completion of corrective action; ensuring that records, logs, permits, regulatory-required documentation, manufacturers' instructions, warrantees, standard procedures, and project plans are maintained and stored in a retrievable manner and that controlled copies of standard procedures and project plans are available to appropriate personnel.

### *2.1.7 Subcontractors*

All subcontractors will report to the PM and furnish all personnel, equipment, and materials required to complete their tasks. The inspection and approval of all subcontracted work will be the responsibility of ESI. Calscience Environmental Laboratory will be used for analytical services. Pacific Commercial Services will be subcontracted for disposal of the decontamination water and purged groundwater.

## 2.2 Planning

The PM is responsible for the project set-up and planning. The planning tasks include the following.

- Obtaining security passes and escorts for all personnel and vehicles requiring access to the Site and surrounding properties.
- Acquiring additional information which includes utility maps, as-built drawings and record drawings, historical data, and any other pertinent information.
- Obtaining all federal, state, and local permits and approvals required to perform the fieldwork.
- Preparing a plan for various facility locations including staging areas, decontamination areas, and material storage.
- Attending pre-performance meetings.
- Preparing and submitting final planning documents prior to initiating fieldwork.

## 2.3 Permitting

All work will be performed in compliance with all applicable federal regulations. In addition, the work will be performed to meet the requirements of state and local laws, rules, and regulations. All members of the field team will have a valid background check including fingerprinting, as required by NAVFAC Hawaii, prior to commencing any fieldwork.



ED_006532_00011133-00098

## 2.4 Project Schedule

Fieldwork will be scheduled between Monday and Friday, between the hours of 0700 to 1700 hours. ESI assumes normal work schedule access within the security fence perimeter of the Site and neighboring properties.

The sequence and frequency of LTM are as follows.

- 35 monthly soil vapor sampling events and 35 monthly fuel product monitoring events will be conducted between October 2012 and August 2015.
- 12 quarterly groundwater sampling events will be conducted between October 2012 and August 2015.

## 2.5 Health and Safety Requirements

All members of the field team are required to read and sign the HSP as verification that they understand the plan. ESI will take all necessary measures to provide a safe work environment during field activities. The HSP includes appropriate Activity Hazard Analyses, and outlines personnel risk minimization through compliance with OSHA and the U.S. Army Corp of Engineers (USACE) safety regulations.



ED_006532_00011133-00099

# 3. SAMPLING AND ANALYSIS PLAN

This section describes the sampling procedures and analysis plan for the LTM at the RHSF and neighboring properties.

## 3.1 Groundwater Sampling and Analysis

Quarterly groundwater sampling and analysis will be conducted at five groundwater monitoring wells (RHMW01, RHMW02, RHMW03, RHMW05, and RHMW2254-01) within the RHSF and two groundwater monitoring wells (HDMW2253-03 and OWDFMW01) located outside of the RHSF. The following section describes the groundwater sampling procedures. Groundwater sample collection will be conducted in accordance with Technical Guidance Manual for Underground Storage Tank Closure and Release Response (DOH, 2000).

### *3.1.1 Purging*

Prior to purging, the depth to groundwater will be measured using a Solinst 122 oil/water interface probe. The oil/water interface probe will be decontaminated prior to use at each monitoring well in order to prevent cross contamination of the monitoring wells. The measurements will be recorded on the groundwater monitoring log located in Appendix B.

***Monitoring Wells in the RHSF (RHMW01, RHMW02, RHMW03, RHMW05, RHMW2254-01)***

Prior to collecting groundwater samples, the monitoring wells will be purged of water in the well casings because the standing water in the well may not be representative of the aquifer. The monitoring wells within the RHSF each contain a dedicated bladder pump which will be used to purge the monitoring wells. A portable air compressor with an in-line filter will be connected to the QED MP50 MicroPurge Basics Controller box, which is connected to the bladder pump and used to control the pumping rate of the bladder pumps. The pumping rate of the bladder pumps will be less than a liter of water per minute.

Water quality parameters will be monitored on a periodic basis during well purging. The water quality parameters that will be measured include hydrogen activity (pH), temperature, conductivity, dissolved oxygen, and oxidation reduction potential. The water quality parameters will be evaluated to demonstrate that the natural characteristics of the aquifer formation water are present within the monitoring well before collecting the sample. At least four to six readings will be collected during the purging process. Purging will be considered complete when at least three consecutive water quality measurements stabilize within approximately ten percent. The readings will be recorded on the groundwater monitoring log located in Appendix B.

The purged water collected from the monitoring wells within the RHSF will be stored in 55-gallon drums and properly disposed of.



ED_006532_00011133-00100

***Monitoring Wells outside of the RHSF (HDMW2253-03 and OWDFMW01)***

Prior to the collecting groundwater samples, the monitoring wells will be purged of water in the well casings because the standing water in the well may not be representative of the aquifer. Disposable bailers will be used to purge the wells.

Water quality parameters will be monitored on a periodic basis during the well purging. The water quality parameters that will be measured include hydrogen activity (pH), temperature, conductivity, dissolved oxygen, and oxidation reduction potential. The water quality parameters will be evaluated to demonstrate that the natural characteristics of the aquifer formation water are present within the monitoring well before collecting the sample. At least four to six readings will be collected during the purging process. Purging will be considered complete when at least three consecutive water quality measurements stabilize within approximately ten percent. The readings will be recorded on the groundwater monitoring log located in Appendix B.

The purged water collected from well OWDFMW01 will be stored in 55-gallon drums and properly disposed of. Based on previous analytical data and approval from DLNR, purged water collected from well HDMW2253-03 is of drinking water quality and can be poured onto the grass surrounding well HDMW2253-03. Note, if there is evidence of contamination (i.e., a petroleum hydrocarbon odor, sheen, or free product), the purged water will be stored in 55-gallon drums and properly disposed of.

### *3.1.2 Sample Collection*

When the water quality parameters have stabilized, groundwater samples will be collected from the wells. The bladder pumps will be used to collect the groundwater samples from the monitoring wells within the RHSF. Disposable bailers will be used to collect the groundwater samples from the monitoring wells located outside of the RHSF. The groundwater samples will be collected no more than two hours after purging is completed for each monitoring well to prevent groundwater interaction with the monitoring well casing and atmosphere. Prior to collecting the sample, the water level in the monitoring wells will be measured and recorded to ensure that water was not drawn down. The groundwater samples will be collected at a flow rate of approximately 0.1 to 0.5 liters per minute. Samples collected for dissolved lead will be filtered in the field using 0.45 micron filters.

During the October 2012 groundwater sampling at well RHMW2254-01, two samples for lead analysis will be collected. The first sample will be filtered in the field and analyzed for dissolved lead. The second sample will not be filtered and analyzed for total lead. The analytical results will be used to determine the effect of filtering on the lead samples.

### *3.1.3 Sample Analysis*

Groundwater samples will be analyzed for the COPCs listed in Table 3.1. Samples will be collected and analyzed in accordance with SW-846 (EPA, 1996). The analytical results will be compared with DOH Hazard Evlaution and Emergency Response (HEER) Office EALs for site that are greater than 150 meter from surface water bodies and where groundwater is a drinking water source (DOH, 2012). The DOH EALs are listed in Appendix D.



ED_006532_00011133-00101

**Table 3.1**
**Groundwater Sampling and Analysis Program**
**Long-Term Groundwater and Soil Vapor Monitoring**
**Red Hill Bulk Fuel Storage Facility**

| Analytical Parameter | Analytical Method | Number of Samples to be Collected | | | | |
|---|---|---|---|---|---|---|
| | | Field Samples | Field Duplicates | Trip Blanks | MS/MSD | Total Number of Samples |
| **Monitoring Wells in RHSF (RHMW01, RHMW02, RHMW03, RHMW05, and RHMW2254-01)** | | | | | | |
| TPH-DRO | EPA 8015 B | 5 | 1 | 0 | 1 | 7 |
| TPH-GRO | EPA 8260 B | 5 | 1 | 0 | 1 | 7 |
| VOCs | EPA 8260 B | 5 | 1 | 1 | 1 | 8 |
| PAHs | EPA 8270C SIM | 5 | 1 | 0 | 1 | 7 |
| Dissolved Lead | EPA 6020 | 5 | 1 | 0 | 1 | 7 |
| **Monitoring Wells Outside of RHSF (HDMW2253-03 and OWDFMW01)** | | | | | | |
| TPH-DRO | EPA 8015 B | 2 | 1 | 0 | 1 | 4 |
| TPH-GRO | EPA 8260 B | 2 | 1 | 0 | 1 | 4 |
| VOCs | EPA 8260 B | 2 | 1 | 1 | 1 | 5 |
| PAHs | EPA 8270C SIM | 2 | 1 | 0 | 1 | 4 |
| Dissolved Lead | EPA 6020 | 2 | 1 | 0 | 1 | 4 |

MS Matrix Spike
MSD Matrix Spike Duplicate
TPH-DRO Total Petroleum Hydrocarbon-Diesel Range Organics
TPH-GRO Total Petroleum Hydrocarbon-Gasoline Range Organics
EPA U.S. Environmental Protection Agency
PAH Polycyclic Aromatic Hydrocarbons
VOC Volatile Organic Compound

### *3.1.4 Sampling Equipment*

All non-disposable sampling equipment will be cleaned and inspected for any signs of contamination prior to the start of sampling. All non-disposable equipment will be decontaminated following established procedures between sample locations, and after all samples have been collected.

The equipment necessary to conduct the groundwater sampling includes a portable compressor, YSI Model 556 Multiparameter Meter with calibration solutions, dedicated bladder pumps, disposable bailers, peristaltic pump, QED MP50 MicroPurge Basics Controller, ppbRae Plus photo-ionization detector (PID), Solinst 122 oil/water interface probe, PPE, field forms, flashlight, and decontamination equipment.

### *3.1.5 Sample Containers*

The laboratory will provide new and clean sample bottles with the required preservative. The laboratory will also provide coolers and appropriate packing materials for packaging and shipping samples. Coolers will be durable, clean, and in good working order. The



ED_006532_00011133-00102

coolers shall be able to accommodate the laboratory-supplied sample bottles in an upright position.

Prior to sampling, the FM will inspect all supplies to ensure that they are acceptable for use. Groundwater samples will be collected in accordance with Technical Guidance Manual for Underground Storage Tank Closure and Release Response (DOH, 2000), Technical Guidance Manual for the Implementation of the Hawaii State Contingency Plan, (DOH, 2009), and Test Methods for Evaluating Solid Waste, SW-846, 3rd ed., (EPA,1996). Samples collected for TPH-GRO and volatile organic compounds (VOC) analysis will be collected first followed by the other analytes. Once the sample containers are filled, they will be sealed, labeled, placed into Ziploc® bags, and placed into a cooler with ice for preservation. Samples will be packaged and transported to the laboratory within 48 hours of the collection time. Required sample container type, volume, preservative, and recommended holding times for each analysis is summarized in Table 3.2.

**Table 3.2**
**Groundwater Sample Containers, Preservative, and Holding Times**
**Long-Term Groundwater and Soil Vapor Monitoring**
**Red Hill Bulk Fuel Storage Facility**

| Analyte | Number/ Type of Containers per Sample | Preservative | Holding Time | |
|---|---|---|---|---|
| | | | Extraction | Analysis |
| TPH-DRO | 500 milliliter amber glass bottle | 4 degrees Celsius | 7 days | 40 days |
| TPH-GRO/ VOCs | Three 40 milliliter glass vials with Teflon-lined septum | 4 degrees Celsius | - | 7 days |
| PAHs | One liter amber glass bottle | 4 degrees Celsius | 7 days | 40 days |
| Dissolved Lead | One 250 milliliter polyethylene bottle | 4 degrees Celsius, nitric acid | - | 180 days |

TPH-DRO Total Petroleum Hydrocarbon-Diesel Range Organics
TPH-GRO Total Petroleum Hydrocarbon-Gasoline Range Organics
PAH Polycyclic Aromatic Hydrocarbons
VOC Volatile Organic Compound

### *3.1.6 Sample Preservation*

Samples collected for dissolved lead analysis will be collected in sample containers containing nitric acid. Samples collected for dissolved lead analysis will be filtered in the field using a 0.45 micron filter. The dissolved lead samples from the outside monitoring wells will be filtered by using a peristaltic pump. All samples will be cooled with ice immediately after the collection through delivery to the laboratory. The samples will be maintained at approximately 4°C (±2°C).



ED_006532_00011133-00103

### *3.1.7 Sample Labeling*

Each sample will be assigned both a chain of custody (COC) identification (ID) number and a descriptive ID number. All sample ID numbers will be recorded in the field logbook maintained by the FM.

***COC ID Number***

The COC ID number, which is the only ID number submitted to the laboratory, is used to facilitate data tracking and storage. The COC ID number allows all samples to be submitted to the laboratory without providing information on the sample type or source. A COC ID number will assigned to each sample as follows:

**ESzzz**
where;

| | |
|---|---|
| **E** | Designating the sample team's company (e.g., ESI) |
| **S** | Designating Storage Facility |
| **zzz** | Chronological number, starting with 001 |

QC sample will be included in the chronological sequence.

***Descriptive ID Number***

A second sample ID number, which is linked to the COC ID number, will be for internal use only and provide sample information including, the sample location, type, sequence, matrix, and depth. The descriptive ID number is not revealed to the laboratory. A descriptive ID number will be assigned to each sample as follows:

**RH-MWxx-GWxx**

Where;

| | |
|---|---|
| **RH** | designates the associated site location Red Hill |
| **MWxx** | designates the sample MW number |
| **GWxx** | designates the groundwater sampling event number |

### *3.1.8 Sample Handling and Shipping*

Samples will be handled in a manner that ensures their integrity and traceability to the sampling locations. This will be achieved by the use of trained field and laboratory personnel; controlled field, transport, and laboratory conditions; and implementation of rigorous sample preparation, collection, preservation, storage, packaging, transportation, and COC procedures.

Standard COC protocol will be observed during sample collection, management, and shipment to the laboratory. Sample shipments to the laboratory will be accompanied by a COC form. An example of the COC form is in Appendix B. COC forms will become part of the permanent project record upon completion of the project. The PM will direct project personnel to maintain custody of samples and be responsible for monitoring compliance with the COC procedures. Project personnel will be responsible for the care and custody of the samples until they are transferred to another party, shipped to the laboratory, or properly disposed.

## 3.2 Soil Vapor Monitoring



ED_006532_00011133-00104

Monthly soil vapor monitoring will be conducted at 18 soil vapor monitoring points (SVMP) located within the RHSF. Each SVMP will be monitored at three different depths, one near the top, one in the middle, and one near the bottom of the SVMP. SVMPs will be purged and monitored for VOCs using the PID. Purging will be accomplished using an electric air pump. The flow rate during purging will be less than 200 milliliters per minute (ml/min). The electric air pump will purge for at least five minutes before sampling.

Monitoring results will consist of field readings collected by the field team using a PID probe. The readings will be recorded in real time and recorded on the soil vapor monitoring log located in Appendix B.

If the PID detects over 280,000 parts per billion of VOCs by volume (ppbv) (i.e., one-hallf of the calculated concentration expected above water with dissolved JP-8 at the solubility limit) for tanks containing jet fuels (i.e., JP-5 or JP-8) or 14,000 ppbv (i.e., one-half of the calculated concentration expected above water with dissolved diesel fuel at the solubility limit) for tanks containing diesel fuel during the monthly soil vapor monitoring, it is recommended that aggressive and proactive actions be taken to assess the integrity of the associated tank system and mitigate, as needed, for potential fuel releases (Environet, 2012a). If, after an inspection of the tank system, it is uncertain whether a leak exists, it is recommended that soil vapor samples be taken for laboratory analysis.

### *3.2.1 Monitoring Procedures*

Prior to entering the tunnel in the RHSF, the PID will be calibrated using a single use glass VOC zeroing tube and the tube adapter. Following calibration, the plastic filter will be attached and a reading obtained to determine if the filter affects ambient air readings.

After entering the tunnel, the soil vapor monitoring equipment will be placed by the SVMP being tested. The well vault covers will be opened and the Ziploc® bags will be removed from the well compartment and placed next to the side of the SVMP. The shallow, medium, and deep probes will be identified using the attached reflective tags or color coded tape (orange is shallow, blue is medium, and white is deep).

**Purging**

To begin purging, the purge tubes from the probes will be connected to the intake nozzle of the electric air pump and the valve opened by turning the valve handle so that it is parallel with the rest of the apparatus. The pump will then be turned on. The SVMP will be purged for five minutes at a rate of less than 200 ml/min. The purge time will be recorded in the field log book. While purging, the appropriate Ziploc® bag with the Tedlar® bag and Tygon® tubing inside will be identified and taken out of the SVMP.

The Tedlar® bag will be placed inside the vacuum chamber; then the Tygon® tube will be attached to the vacuum chamber (take the metal ferrals off of the tube before inserting the nut, then place them back on again, and attach). The Tygon® tube will be connected to the Tedlar® bag inside the vacuum chamber bag's open valve (be sure not to open the valve more than one rotation). The appropriate tube will be taken from inside the vacuum chamber and snapped on the white plastic tip to the outside of the chamber.

**Monitoring**

Once purging is complete, the pump will be turned off and the purge tube will be detached from the pump and placed on the open end of the vacuum chamber. The open end of the Tygon® tube will be inserted into the purge tube, making sure the bag valves are open, and that the vacuum chamber will be closed. After the pump is started, the compression hole will be covered to fill the Tedlar® bag. The bag will be observed to

prevent overfilling. Once the bag is full, the pump will be turned off, the vacuum chamber will be opened, and the bag's valve will be closed. If air is escaping from the bag when the lid is open, the process will be repeated; however, the compression hole will only be partially covered to relieve the pressure in the vacuum chamber while the vapors are slowly collecting in the Tedlar® bag. The Tedlar® bag will be detached from the vacuum chamber and attached to the PID. The bag valve will be opened and testing will begin. The PID will be in survey mode.

Once the numbers begin to appear on the PID screen, three readings will be recorded every 10 seconds for 30 seconds in the field log. The average value from the PID will be taken from the three recorded values and the maximum peak. Once the readings have been collected, the PID will be placed back on survey mode. The purge valve will be closed and the next probe can be purged.

During the purging of the probe, the Tedlar® bag from the previous probe will be deflated and the Tedlar® bag valve will be closed before returning it to the Ziploc® bag. The Tygon® tube will be detached and returned to the Ziploc® bag. The appropriate dedicated Tygon® tube and Tedlar® bag for the probe being purged can be prepared for the next monitoring readings. Continue this process until all points at the location have been tested.

Once all the probes of a SVMP have been monitored, all the Tedlar® bags will be deflated and the valves will be closed before returning each Ziploc® bag into the well compartment. All purge valves will be closed and the well cover will be secured. The pump will be unplugged and the monitoring will continue at the next SVMP until all SVMPs have been monitored. The PID will be tested in the main tunnel between each SVMP. The background levels will be recorded in the field logbook (if it reads more than the typical background for the day, change the plastic filter). The standard operating procedure for soil vapor monitoring is located in Appendix C.

### *3.2.2 Soil Vapor Monitoring Equipment*

All non-disposable sampling equipment will be cleaned and inspected for any signs of contamination prior to the start of sampling. All non-disposable equipment will be decontaminated following established procedures between sample locations, and after all samples have been collected.

The sampling equipment necessary to conduct the soil vapor monitoring includes an electric pump, extension cord, 15/16-inch socket and ratchet drive, ppbRAE Plus PID, 10,000 parts per billion (ppb) isobutylene calibration gas, vacuum chamber, dedicated field logbook, field forms, personal protective equipment (PPE), and a flashlight.

## 3.3 Fuel Product Monitoring

Monthly fuel product monitoring will be performed at four monitoring wells (RHMW01, RHMW02, RHMW03, and RHMW05) located within the RHSF. A Solinst 122 oil/water interface probe will be used to detect the presence and measure the thickness of light non-aqueous phase liquid (LNAPL) to the nearest hundredth of a foot at the water surface. Fuel product monitoring will be performed prior to any purging or sampling event. Fuel product measurements will be recorded onto the fuel product monitoring log located in Appendix B. The standard operating procedure for fuel product recovery is located in Appendix C.



ED_006532_00011133-00106

## 3.4 Decontamination Procedures

All non-disposable equipment will be decontaminated following established procedures between sample locations, and after all samples have been collected. Decontamination procedures will be conducted in accordance with DOH standards (DOH, 2000). The non-disposable equipment will be scrubbed with a non-phosphate detergent and rinsed twice with distilled water.

## 3.5 Field Documentation

Field documentation creates a permanent record of field activities and pertinent sample collection information. Only personnel trained in sampling techniques will collect samples. Standard sample collection procedures will be followed. Documentation of field activities will be in accordance with established procedures and will include field log books, sample labels, and COC forms.

## 3.6 Management and Disposal of IDW

Investigation-derived waste (IDW) will be managed in accordance with DOH standards (DOH, 2000). The various potential waste streams include:

- PPE, including nitrile gloves,
- water, including decontamination water and purged groundwater, and
- disposable sampling equipment, including disposable bailers.

The decontamination water and purged water will be collected and stored in 55-gallon drums. The drums will be transported off-site to an on-island treatment facility for disposal after each event. Based on previous analytical data and approval from DLNR, purged water collected from well HDMW2253-03 is of drinking water quality and can be poured onto the grass surrounding well HDMW2253-03 (Environet, 2012c). Note, if there is evidence of contamination (i.e., a petroleum hydrocarbon odor, sheen, or free product), the purged water will be stored in 55-gallon drums. The drums will then be transported off-site to an on-island treatment facility for disposal after each event.



ED_006532_00011133-00107

# 4. QUALITY ASSURANCE PROJECT PLAN

This Quality Assurance Project Plan (QAPP) is intended to be in conjunction with the SAP in Section 3 with procedures and methods incorporated. The QAPP includes the discussions of the following:

- Summary of the data quality objectives (DQO) process,
- QA/QC sampling and sample handling procedures,
- laboratory QC,
- field QC,
- analytical data quality review,
- data reporting and documentation,
- oversight and assessment, and
- corrective action.

The PM will be responsible for ensuring that the appropriate project personnel have the most current version of the QAPP.

## 4.1 Summary of the Data Quality Objectives Process

The overall sampling and analysis strategy was developed using the Environmental Protection Agency (EPA) Guidance for Quality Assurance Project Plans, EPA QA/G-5, Quality Assurance Management Systems (EPA, 2001).

### *4.1.1 Statement of the Problem*

Previous releases from the existing USTs at the RHSF have the potential to impact the underlying freshwater aquifer located approximately 100 feet beneath the USTs. LTM of groundwater, soil vapor, and fuel product is required to evaluate the presence and magnitude of UST-related contamination and to generate data for decision making at the site.

### *4.1.2 Identify the Goals of the Study*

The goal of the study is to assess whether COPC exceed the screening criteria and whether concentrations are increasing or decreasing.

### *4.1.3 Identify the Information*

The decisions will be made by comparing the groundwater analytical results to the DOH EALs for sites where groundwater is a current or potential drinking water source and a surface water body is located greater than 150 meters from the site (DOH, 2012). The Project Action Levels (PALs) are the most conservative of either the drinking water toxicity level or the gross contamination level and were previously agreed upon by the DOH and DoN (Appendix D). In addition, soil vapor concentrations will be compared to the site specific threshold values of 280,000 ppbv in SVMPs beneath USTs containing JP-5 or JP-8 (type of jet fuel propellant) and 14,000 ppbv in SVMPs beneath USTs containing F-76. The following is a list of information that will be used to determine the hazard to human health:



ED_006532_00011133-00108

- Analytical data representing groundwater from RHMW01, RHMW02, RHMW03, RHMW05, RHMW2554-01, HDMW2253-03, and OWDFMW01,
- Soil vapor monitoring data from 18 SVMPs, and
- Fuel product monitoring data from RHMW01, RHMW02, RHMW03, and RHMW05.

### *4.1.4 Define the Boundaries of the Study*

The monitoring is limited to the groundwater monitoring wells located within the RHSF, two groundwater monitoring wells outside of the RHSF, and 18 SVMPs located inside of the RHSF. These monitoring points were selected due to their close proximity to the contaminant source and their position at the contaminant periphery (downgradient and upgradient). Quarterly groundwater sampling events will be conducted for three years (a total of 12 events commencing October 2012). Monthly soil vapor monitoring will be conducted for three years (a total of 35 events starting October 2012). Monthly fuel product monitoring will be conducted at four of the aforementioned monitoring wells within the RHSF (a total of 35 events starting October 2012).

### *4.1.5 Develop the Analytical Approach*

- If COPC concentrations at a groundwater monitoring well exceed the screening criteria, then the potential risk to groundwater exposure needs to be evaluated. Conversely, if COPC concentrations in groundwater do not exceed the screening criteria, then no further evaluation will be required.
- If soil vapor concentrations at a monitoring location exceed the site specific threshold values, then the potential for the UST-related contamination to migrate and impact groundwater will be evaluated. Conversely, if soil vapor concentrations do not exceed the site specific threshold values, then no further evaluation will be required.
- If fuel product is identified in a monitoring well, then the potential risk to groundwater exposure and the need for remedial action will be evaluated. Conversely if no fuel product is identified, then no further evaluation or action will be required.

### *4.1.6 Specify Performance Acceptance Criteria*

The probability of procedural errors will be controlled through the consistent application of the standard sampling and analysis procedures and sound data quality management.

### *4.1.7 Develop the Plan for Obtaining Data*

The sampling locations were chosen based upon previous investigations and monitoring. The analytical methods and criteria are presented in subsequent sections of this document. Also discussed are field and laboratory QA, data management, and data evaluation.



ED_006532_00011133-00109

## 4.2 QA/QC Sampling and Sample Handling Procedures

All QA/QC sampling and sampling handling procedures will be performed in accordance *Technical Guidance Manual for Underground Storage Tank Closure and Release Response* (DOH, 2000).

### *4.2.1 Sample Collection Method*

Collection and handling procedures have been designed to ensure that project personnel will be able to collect, label, preserve, and transport samples in a consistent manner to maintain sample integrity for the intended purposes of the LTM. Field activities will be performed in accordance with the procedures described in Section 3.

### *4.2.2 Field QC Samples*

The field QC samples for this project will consist of duplicates, MS/MSDs, and trip blanks.

***Duplicates***

Field duplicate samples are used to document the overall precision of the sample collection program. Field duplicate samples will be collected at a minimum of ten percent. Field duplicate samples will be assigned unique identification numbers that do not indicate that the sample is a duplicate. All duplicates will be analyzed for the same parameters as project samples.

***MS/MSD***

Laboratory MS and MSD analysis are used to assess analytical accuracy and precision in response to potential matrix interference. If all of the MS and MSD recoveries are within specified ranges, then all the data is considered accurate (DoD, QSM 2011).

***Trip Blanks***

Trip blanks are used to detect VOC contamination attributable to shipping and field handling procedures. The trip blanks will be prepared by the analytical laboratory using a reagent grade water in 40 milliliter volatile organic analysis (VOA) vials. Trip blanks will accompany every cooler that contain samples to be analyzed for VOCs and TPH-GRO. The trip blanks will travel with the cooler from the analytical laboratory to the field and will be returned to the analytical laboratory along with the project samples. The trip blanks will be analyzed for the same VOCs and TPH-GRO as the project samples with which they are shipped.

### *4.2.3 Sample Containers*

The groundwater samples for chemical analyses will be placed in the sample containers listed in Table 3.2, preserved as indicated, and analyzed within the holding times. These containers, preservatives, and holding times are specified in the respective analytical methods. Calscience will supply the required sample containers.



ED_006532_00011133-00110

#### *4.2.4 Sample Labeling*

Each sample will be assigned both a COC ID number and a descriptive ID number. All sample ID numbers will be recorded in a sample logbook maintained by the FM. This is covered in Section 3.1.7.

#### *4.2.5 Field Instrument Calibration/Documentation*

The following activities and documentation will be performed and maintained for all field equipment requiring periodic calibration:

- Electronic equipment requiring calibration will be calibrated prior to use by those persons directly responsible for the equipment, such as the field staff.
- Field equipment will be checked daily to verify that all of the equipment is calibrated according to the manufacturer's instructions and is operating properly prior to use.
- Field equipment that has been dropped, damaged, or is believed to be inaccurate will be tagged as in operable, removed from service and recalibrated. Field equipment that cannot be repaired or recalibrated will be replaced.
- Documentation pertinent to the calibration and maintenance of field equipment will be maintained in a bound field logbook. Entries made into the logbook regarding the status of field equipment will contain, but are not necessarily limited to, the following information:
    - date, time, and calibration readings;
    - name of person conducting calibration; and
    - type of field equipment being serviced and identification number (e.g., serial number) and reference standard used for calibration (e.g., pH of buffer solution).

The field logbook or photocopies of applicable pages will be made part of the permanent project record upon completion of the project.

### 4.3 Laboratory Requirements

All laboratory activities will be performed in accordance with the DoD Quality Systems Manual for Environmental Laboratories, Version 4.2 (DoD, 2010). All laboratory submittals will be Naval Installation Restoration Information Solution (NIRIS) compatible.

#### *4.3.1 Project Analytes*

Analytical data will be generated using EPA methodologies published in "Test Methods for Evaluating Solid Waste, Physical/Chemical Methods SW-846" (EPA, 1996). The following analytical methods will be used during this investigation:



ED_006532_00011133-00111

- TPH-DRO – EPA Method 8015B;
- TPH-GRO – EPA Method 8260B;
- VOCs – EPA Method 8260B;
- PAHs – EPA Method 8270C SIM; and
- Dissolved Lead – EPA Method 6020.

Standard sample preparation and extraction procedures for each analytical method will be used by the laboratory.

### *4.3.2 Reporting Limits*

Reporting limits are established by the laboratory based on the limits of quantitation (LOQs), historical data, and EPA limits established for the analytical methods employed. The reporting limits for samples may require adjustment due to the matrix interference or if high analyte concentrations necessitate sample dilution before analysis. Matrix interference and sample dilutions have the effect of increasing the reporting limits. Failure to meet the specified reporting limits will be described in the sample delivery group case narrative and summarized in the data review reports.

Appendix D lists the analyte DOH EALs along with the respective limits of detection (LODs) and LOQs from Calscience Environmental Laboratory.

## 4.4 Analytical Data Quality Review

Data quality will be assessed by evaluating the accuracy, precision, representativeness, completeness, comparability, and sensitivity parameters.

### *4.4.1 Accuracy*

Accuracy is defined as the degree of agreement of a measurement to an accepted reference or true value. When applied to a set of observed values or measurements, accuracy will be a combination of random and systematic error. Analytical accuracy will be defined as the percent recovery of an analyte in a reference standard or spiked sample. Accuracy limits for laboratory control samples are established by individual laboratories. The acceptance criteria for accuracy are dependent on the analytical method, and are based on historical laboratory data. Failure to meet the accuracy limits will be described in the sample delivery group as a case narrative and summarized in the data review reports.

The percent differences of the continuing calibration is also an indication of accuracy. Sample results are qualified “UJ” for non-detects and “J” for detects, if the percent differences for a continuing calibration is out of the acceptable range, this will be reported by the laboratory in the analytical analysis.



ED_006532_00011133-00112

### 4.4.2 Precision

Precision is defined as the agreement between a set of replicate measurements without assumption or regard about the true value. Precision limits for the laboratory measurements will be evaluated from the sample/sample duplicate analyses results. Field sampling precision will be evaluated from the field duplicate sample analyses results.

The relative percent difference (RPD) measured between two duplicate samples will serve as the quantitative measure of precision. Precision for sampling is evaluated separately from precision for analytical data. Field co-located samples help clarify the distinction between uncertainty due to analytical variability and heterogeneity of the sample matrix. Laboratory control samples (LCS) and duplicate LCS analyses results will be used to assess analytical precision.

### 4.4.3 Completeness

Completeness is defined as the overall percentage of valid analytical results (including estimated results) compared to the total number of analytical results reported by the analytical laboratory. The completeness goal for this project is 90 percent. Successful completion of data acquisition can only be accomplished if both the field and laboratory portions of the project are performed according to the procedures described in the QAPP.

### 4.4.4 Representativeness

Representativeness is the degree that data accurately and precisely represents a characteristic of a population, parameter variations at a sampling point, or an environmental condition. Representativeness will be achieved by conducting sampling in compliance with the sample collection procedures described in Section 3. Homogenized field duplicate samples will be collected and used as a means to assess field representativeness. Section 3 details preliminary sample points; however, once on site, the number and types (matrix) of samples collected at each investigation site will be reassessed to ensure that the site is adequately sampled. Sample locations will be biased towards areas where releases would likely migrate to and/or accumulate.

### 4.4.5 Comparability

Comparability expresses the confidence with which one data set can be compared to another data set. Comparability can be related to accuracy and precision because these quantities are measures of data reliability. Data are considered comparable if collection techniques, measurement procedures, methods, and reporting are equivalent for the samples within a sample set. Comparability for sampling will be determined to be acceptable based on the following criteria: a consistent approach to sampling was applied throughout the program; samples were consistently preserved; and samples were collected during the same time of the year and under similar physical conditions.

#### *4.4.6 Sensitivity*

Sensitivity is defined as the ability of an analytical method or instrument to detect the target analytes at the level of interest. Sensitivity is assessed based on calibration criteria, instrument method detection limits (MDLs), and LOQs, which are presented in the WP/SAP. Sensitivity will be measured by including a calibration standard for the analytes at or close to the quantitation limit.

## 4.5 Data Reporting and Documentation

All data deliverables will be NIRIS compatible. The laboratory will prepare and retain full analytical and QC documentation. The following items present the key components of the hard copy deliverables that will be generated:

- data packages along with supporting QC data,
- original copy COC forms or certified copies,
- cover sheet listing the samples included in the report and narrative comments describing problems encountered during the analysis,
- tabulated presentation of analytical results for all samples including reporting limits for all analyses and any laboratory assigned data qualifiers (data qualifiers will be defined and documented in the case narrative),
- tabulated presentation of the results for all method and preparation blanks as applicable, and
- analytical results for all laboratory QC sample analyses (LCS results and recoveries, surrogate recoveries, recoveries, and RPDs, laboratory duplicate (LD), and serial dilution results).

## 4.6 Oversight and Assessment

The QA/QC protocols and procedures will be implemented for all project activities. The plans and procedures implemented in the field and laboratory will be evaluated by direct oversight of activities, surveillance, and review of the documentation and data. The oversight and assessment of project activities will be performed by the PM or designated alternate. If problems or incidences of nonconformance are identified, the following section identifies personnel that will deal with them and corrective measures that will be implemented.

## 4.7 Corrective Action

The PM is responsible for maintaining quality throughout this LTM project. The FM is responsible for ensuring the day-to-day quality of field and laboratory activities.

All incidences of nonconformance with the established QC procedures will be expeditiously identified and controlled. No additional work that is dependent on a nonconforming activity



ED_006532_00011133-00114

that potentially affects data quality will be performed until the identified nonconformance is corrected. Documentation describing the nonconformity will be submitted to the PM. The documentation will include corrective measures to prevent nonconformity from recurring.

When errors, deficiencies, or out-of-control situations exist, the QA program provides systematic procedures, called "corrective actions," to resolve problems and restore proper functioning to the analytical system. Laboratory personnel are alerted that corrective actions may be necessary if:

- QC data are outside acceptable limits for precision and accuracy;
- blanks or LCS contain contaminants above acceptable limits;
- there are unusual changes in detection limits;
- deficiencies are detected during internal or external audits or from the results of performance evaluation samples; or
- inquiries concerning data quality are received from clients.

Corrective action procedures are often handled at the bench level by the analyst, who reviews the preparation or extraction procedure for possible errors, checks the instrument calibration, spike and calibration mixes, and instrument sensitivity. If the problem persists or cannot be identified, the matter is referred to the laboratory technical personnel, Laboratory PM, and/or QA department for further investigation. Once the problem is resolved, full documentation of the corrective action procedure will be filed with the QA department through an anomaly or non-conformance form. This form is kept in a project folder and filed in the QA department. Corrective action documentation is routinely reviewed by the QA manager.

Corrective action is dictated by the type and extent of the non-conformance. Corrective action may be initiated and carried out by non-supervisory staff, but final approval and data review by management is necessary before reporting any information. All potentially affected data must be thoroughly reviewed for acceptance or rejection. Samples are monitored closely so that they can be analyzed within the recommended holding time. However, should a sample be analyzed outside of the specified holding time, a Holding Time Violation Notification is filled out and the Laboratory PM is informed immediately. It is the Laboratory PM's responsibility to inform the PM and QA manager so that a decision can be made to re-sample.

The Laboratory PM or QA officer share the responsibility of reviewing all laboratory analytical activities to ensure compliance with the QC requirements outlined in this QAPP. This review serves as a control function in that it should be conducted frequently so deviations from method requirements will be immediately identified and corrected.

### *4.7.1 Field Corrective Action*

The FM will review the procedures being implemented in the field for consistency with the established protocols. Sample collection procedures will be checked for completeness. When procedures are not strictly in compliance with the established protocol, the deviation will be documented and reported to the PM. Non-conformances

will be expeditiously identified and controlled. No additional work that is dependent on a nonconforming activity that potentially affects data quality will be performed until the identified nonconformance is corrected.

Corrective actions will be defined by the PM and documented as appropriate. After implementation of the corrective action, the FM will provide the PM with a written memorandum documenting field implementation. The memorandum will become part of the project files.

### *4.7.2 Laboratory Corrective Action*

The Laboratory QA/QC officer or designated alternate will be responsible for initiating corrective action as necessary. Non-conformance or problems occurring at the laboratory will be reported to the PM within one working day of identification. Appropriate corrective action will be required if analyses of QC samples or laboratory conditions do not meet criteria specified in the respective methods, the laboratory QAPP, or this WP/SAP.

The chemist or designated alternate will review the field and laboratory data generated for this project to determine if the project QA objectives are met. If any non-conformance are found in the laboratory analytical results or documentation procedures during data assessment and validation, the impact of those non-conformances on the overall project QA objectives will be assessed. Appropriate actions, including resampling or reanalysis, may be recommended to the PM, so that the objectives can be achieved.

### *4.7.3 Corrective Action Following Data Assessment*

The chemist or designated alternate will review the field and laboratory data generated for this project to determine if project QA objectives are met. If non-conformances are found in the field procedures, sample collection procedures, field documentation procedures, laboratory analytical and documentation procedures, or data review procedures, the impact of those non-conformances on the overall project objectives will be evaluated. Appropriate actions, including resampling or reanalysis, will be recommended to the PM so that the project objectives can be achieved.



ED_006532_00011133-00116

***This Page Intentionally Left Blank***



ED_006532_00011133-00117

# 5. REFERENCES

DoD, 2010, Department of Defense Quality Systems Manual for Environmental Laboratories, Version 4.2, October 2010.

DOH, 2009, Hawaii Department of Health, Technical Guidance Manual for the Implementation of Hawaii State Contingency Plan, November 2009.

DOH, 2000, Hawaii Department of Health, Technical Guidance Manual for Underground Storage Tank Closure and Release Response, March 2000.

DOH, 2005, Hawaii Department of Health, Screening for Environmental Concerns at Sites with Contaminated Soil and Groundwater, 2005.

DOH, 2009, Hawaii Department of Health, Technical Guidance Manual for the Implementation of the Hawaii State Contingency Plan, June 2009.

DOH, 2012, Hawaii Department of Health, Evaluation of Environmental Hazards at Sites with Contaminated Soil and Groundwater, Updated January 2012.

DoN, 2007, Department of Navy, Project Procedures Manual, U.S. Navy Environmental Restoration Program, NAVFAC Pacific, February 2007.

Earth Tech, 1999, Remedial Investigation, Phase II Technical Report, Red Hill Oily Waste Disposal Facility, Halawa, Oahu, Hawaii. Prepared for Naval Facilities Engineering Command, Pearl Harbor, Hawaii, 1999.

Environet, 2010, Work Plan, Long-Term Monitoring, Red Hill Bulk Fuel Storage Facility, Pearl Harbor, Oahu, Hawaii, September 2010.

Environet, 2012a, Soil Vapor Sampling Report for Round 49, Red Hill Bulk Fuel Storage Facility, Joint Base Pearl Harbor-Hickam, Oahu, Hawaii, April 18, 2012.

Environet, 2012b, Draft Quarterly Groundwater Monitoring Report, Red Hill Bulk Fuel Storage Facility, Joint Base Pearl Harbor-Hickam, Oahu, Hawaii, August 2012.

Environet, 2012c, Draft Quarterly Groundwater Monitoring Report-Outside (Non-Tunnel) Wells, Red Hill Bulk Fuel Storage Facility, Joint Base Pearl Harbor-Hickam, Oahu, Hawaii, August 2012.

EPA,1994, Guidance for the Data Quality Objective Process, EPA/600/R-96/055, Office of Research and Development, September 1994.

EPA, 1995, Contract Laboratory Program – Statement of Work for Inorganic Analysis – Multi-Media, Multi-Concentration, Document ILM04.0, 1995.

EPA, 1996, Test Methods for Evaluating Solid Waste, SW-846, 3rd ed. Final Update III, Washington, GPO, November 1996.



ED_006532_00011133-00118

EPA, 1997, Test Methods for Evaluating Solid Waste, Physical/Chemical Methods (SW-846), U.S. Environmental Protection Agency.

EPA, 2001, EPA Requirements for Quality Assurance Project Plans, EPA QA/R-5, EPA/240/B-01/003, Quality Assurance Division. March 2001.

TEC, 2006, Red Hill Bulk Fuel Storage Facility Final – Work Plan Addendum, Prepared for Naval Facilities Engineering Command, Pearl Harbor, Hawaii, May 2006.

TEC, 2009, Quarterly Groundwater Monitoring Report, Red Hill Fuel Storage Facility, Prepared for Navy Region Hawaii, Pearl Harbor, Hawaii, September 2009.

Title 29 CFR Part 1910.120 (29 CFR 1910.120), Hazardous Waste Operations and Emergency Response, Hazard Communication.



ED_006532_00011133-00119

# FIGURES

*This Page Intentionally Left Blank*

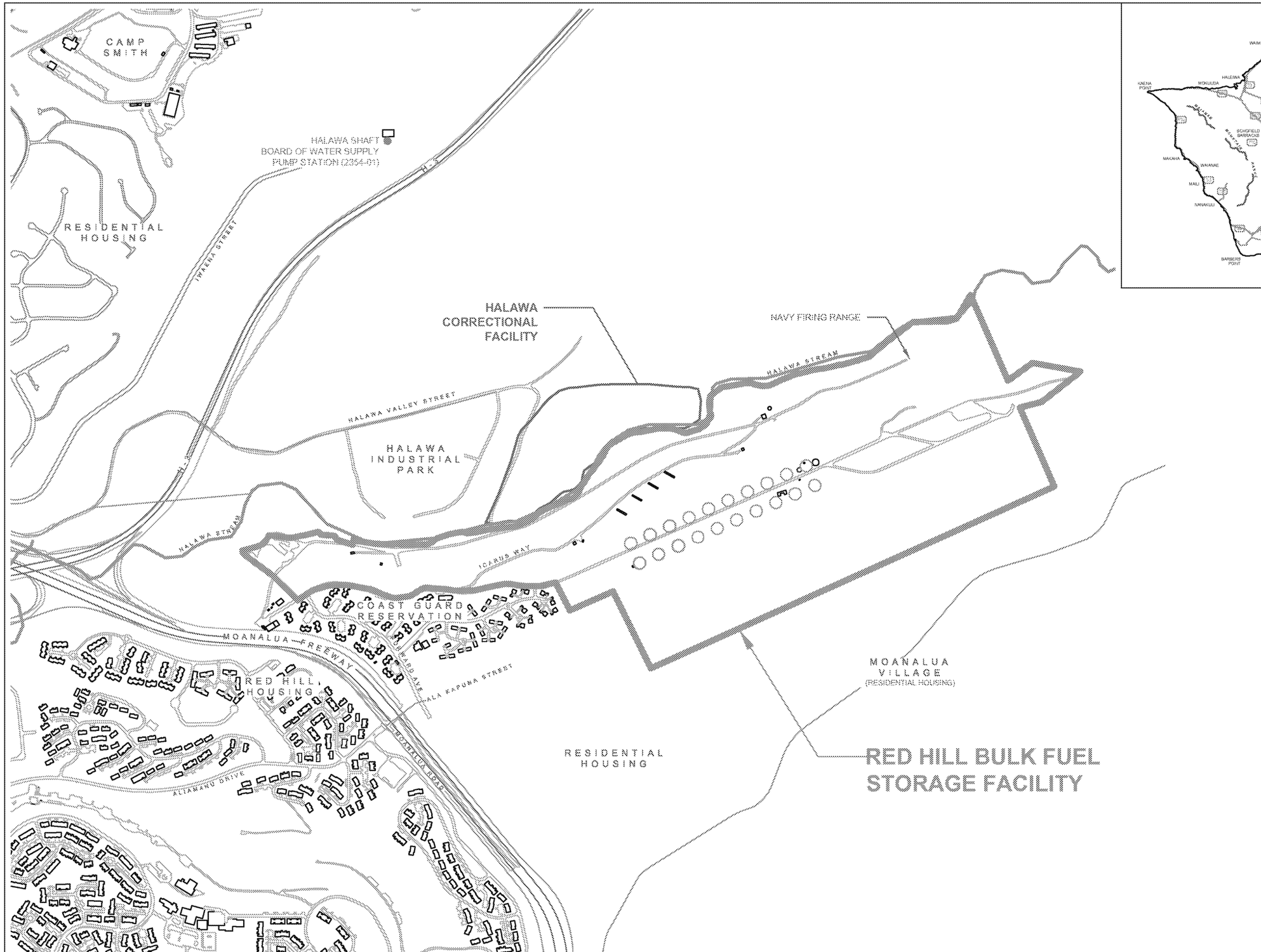


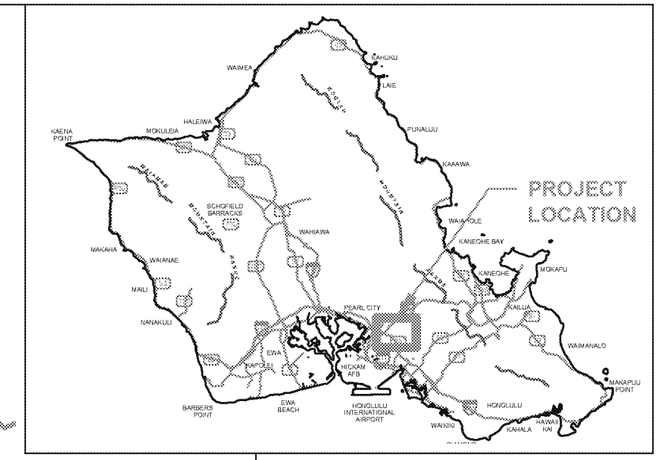


## NOTES

The accuracy of this document is limited to the quality and scale of the source information. This document is not a legal representation of an engineered survey.

## SOURCES

Pearl Harbor Base Map

Navy GIS files

NORTH

*GRAPHIC SCALE*

900 0 900

Scale in Feet

**FIGURE 1**

**SITE LOCATION**

LONG-TERM MONITORING
RED HILL BULK FUEL STORAGE FACILITY
NAVAL SUPPLY SYSTEM COMMAND (NAVSUP)
FLEET LOGISTICS CENTER
JBPHH, OAHU, HAWAII

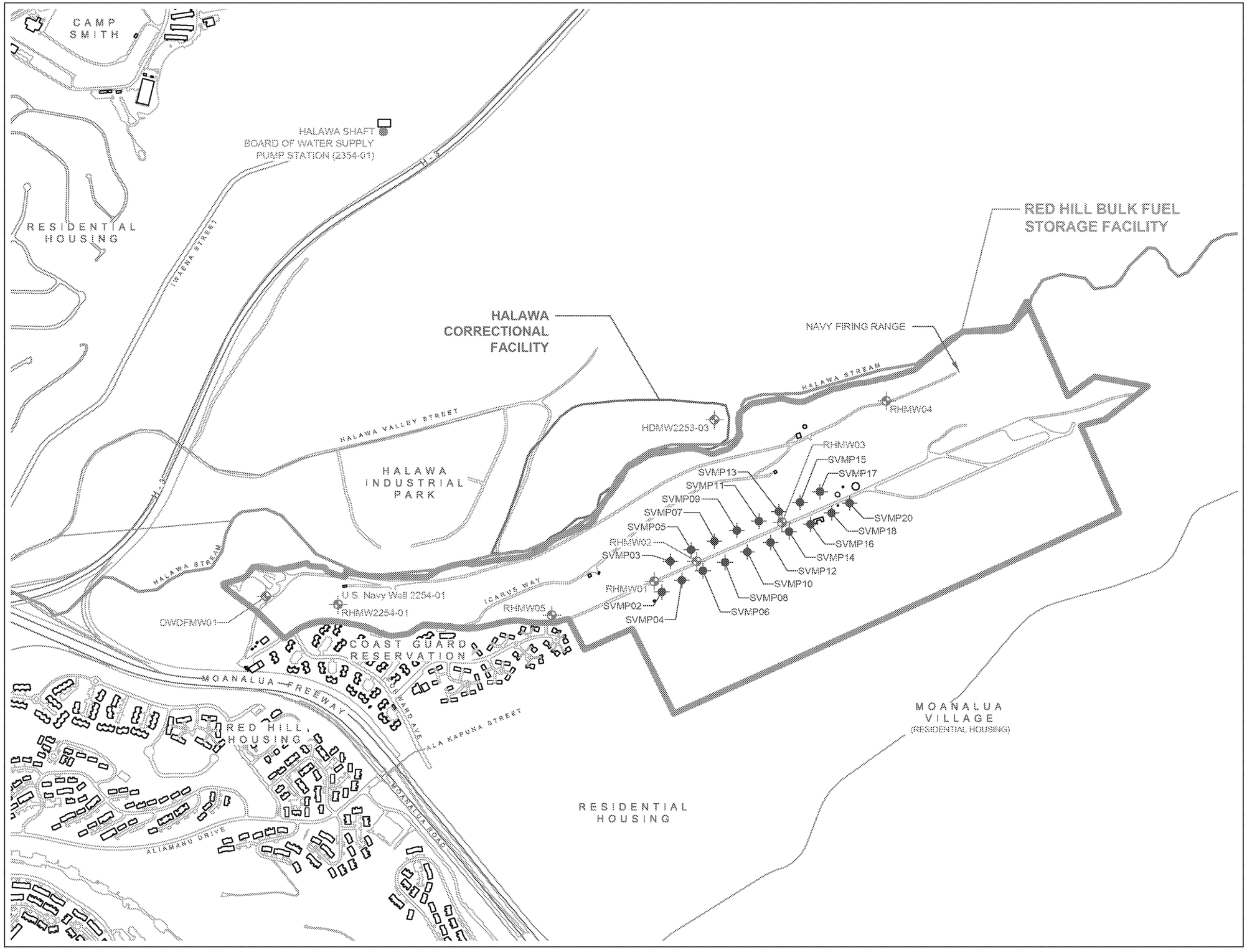


## LEGEND

- RED HILL BULK FUEL STORAGE FACILITY
- HALAWA CORRECTIONAL FACILITY
- HALAWA STREAM
- BUILDING
- ROAD
- ABOVEGROUND STORAGE TANK
- WATER TANK
- SOIL VAPOR MONITORING POINT
- GROUNDWATER MONITORING WELL
- BOARD OF WATER SUPPLY PUMP STATION

## NOTES

The accuracy of this document is limited to the quality and scale of the source information. This document is not a legal representation of an engineered survey.

## SOURCES

Pearl Harbor Base Map

Navy GIS files

NORTH

GRAPHIC SCALE

1,200 0 1,200

Scale in Feet

**FIGURE 2**

**SITE LAYOUT**

LONG-TERM MONITORING
RED HILL BULK FUEL STORAGE FACILITY
NAVAL SUPPLY SYSTEM COMMAND (NAVSUP)
FLEET LOGISTICS CENTER
JBPHH, OAHU, HAWAII

# APPENDIX A

# 2012 PROJECT SCHEDULE

*This Page Intentionally Left Blank*

Preliminary Estimated Schedule
CTO awarded 8/29/2012

# Estimated Project Schedule

Long-Term Monitoring Red Hill Bulk Fuel Storage Facility
Oahu, Hawaii

Contract N62742-12-D-1853
CTO 0002

| ID | Task Name | Duration | Start | Finish |
|---|---|---|---|---|
| 1 | **1 Planning** | **43 days** | **Wed 8/29/12** | **Wed 10/10/12** |
| 2 | 1.1 CTO Award | 1 day | Wed 8/29/12 | Wed 8/29/12 |
| 3 | 1.2 Draft WP/HASP | 42 days | Thu 8/30/12 | Wed 10/10/12 |
| 4 | 1.2.1 Draft WP/HASP | 14 days | Thu 8/30/12 | Wed 9/12/12 |
| 5 | 1.2.2 Navy Review & Comment of Draft WP/HASP | 14 days | Thu 9/13/12 | Wed 9/26/12 |
| 6 | 1.2.3 Final WP/HASP | 14 days | Thu 9/27/12 | Wed 10/10/12 |
| 7 | **2 Kick-off Meeting/Site Inspection** | **22 days** | **Wed 9/26/12** | **Wed 10/17/12** |
| 8 | 2.1 Initial Site Inspection/Kick-off Meeting | **1 day** | **Wed 9/26/12** | **Wed 9/26/12** |
| 9 | 2.2 Follow-up Inspection | **1 day** | **Wed 10/17/12** | **Wed 10/17/12** |
| 10 | **3 2012-Monthly Soil Vapor and Fuel Monitoring Sampling & Reporting** | **89 days** | **Wed 9/26/12** | **Sun 12/23/12** |
| 11 | 3.1 Oct. 2012-Monthly Soil Vapor and Product Thickness Measurement | **6 days** | **Thu 10/25/12** | **Tue 10/30/12** |
| 12 | 3.1.1 Soil Vapor Collection and Product Thickness Measurements | 1 day | Thu 10/25/12 | Thu 10/25/12 |
| 13 | 3.1.2 Final Fuel Fuel Product Monitoring and Vapor Monitoring Reports | 5 days | Fri 10/26/12 | Tue 10/30/12 |
| 14 | 3.2 Nov. 2012-Monthly Soil Vapor and Product Thickness Measurement | **8 days** | **Mon 11/26/12** | **Mon 12/3/12** |
| 15 | 3.2.1 Soil Vapor Collection and Product Thickness Measurements | 1 day | Mon 11/26/12 | Mon 11/26/12 |
| 16 | 3.2.2 Final Fuel Fuel Product Monitoring and Vapor Monitoring Reports | 7 days | Tue 11/27/12 | Mon 12/3/12 |
| 17 | 3.3 Dec. 2012-Monthly Soil Vapor and Product Thickness Measurement | **7 days** | **Tue 12/18/12** | **Mon 12/24/12** |
| 18 | 3.3.1 Soil Vapor Collection and Product Thickness Measurements | 1 day | Tue 12/18/12 | Tue 12/18/12 |
| 19 | 3.3.2 Final Fuel Fuel Product Monitoring and Vapor Monitoring Reports | 6 days | Wed 12/19/12 | Mon 12/24/12 |
| 20 | **4 2012-Quarterly Groundwater Monitoring - Fieldwork, Analyses, & Reporting** | **52 days** | **Mon 10/22/12** | **Wed 12/12/12** |
| 21 | 4.1 4Q2012 GW Monitoring | 52 days | Mon 10/22/12 | Wed 12/12/12 |
| 22 | 4.1.1 GW Sample Collection (Inside Tunnel Wells) | 2 days | Mon 10/22/12 | Tue 10/23/12 |
| 23 | 4.1.2 GW Sample Collection (Outside Tunnel Wells) | 1 day | Wed 10/24/12 | Wed 10/24/12 |
| 24 | 4.1.3 IDW Disposal | 3 days | Mon 10/22/12 | Wed 10/24/12 |
| 25 | 4.1.4 Sample Shipping | 2 days | Tue 10/23/12 | Wed 10/24/12 |
| 26 | 4.1.5 Sample Analysis | 10 days | Thu 10/25/12 | Sat 11/3/12 |
| 27 | 4.1.6 Data Evaluation | 3 days | Sun 11/4/12 | Tue 11/6/12 |
| 28 | 4.1.7 Draft Report | 21 days | Fri 10/26/12 | Thu 11/15/12 |
| 29 | 4.1.8 Gov't Review of Draft Report | 14 days | Fri 11/16/12 | Thu 11/29/12 |
| 30 | 4.1.9 Final Report | 14 days | Fri 11/30/12 | Thu 12/13/12 |

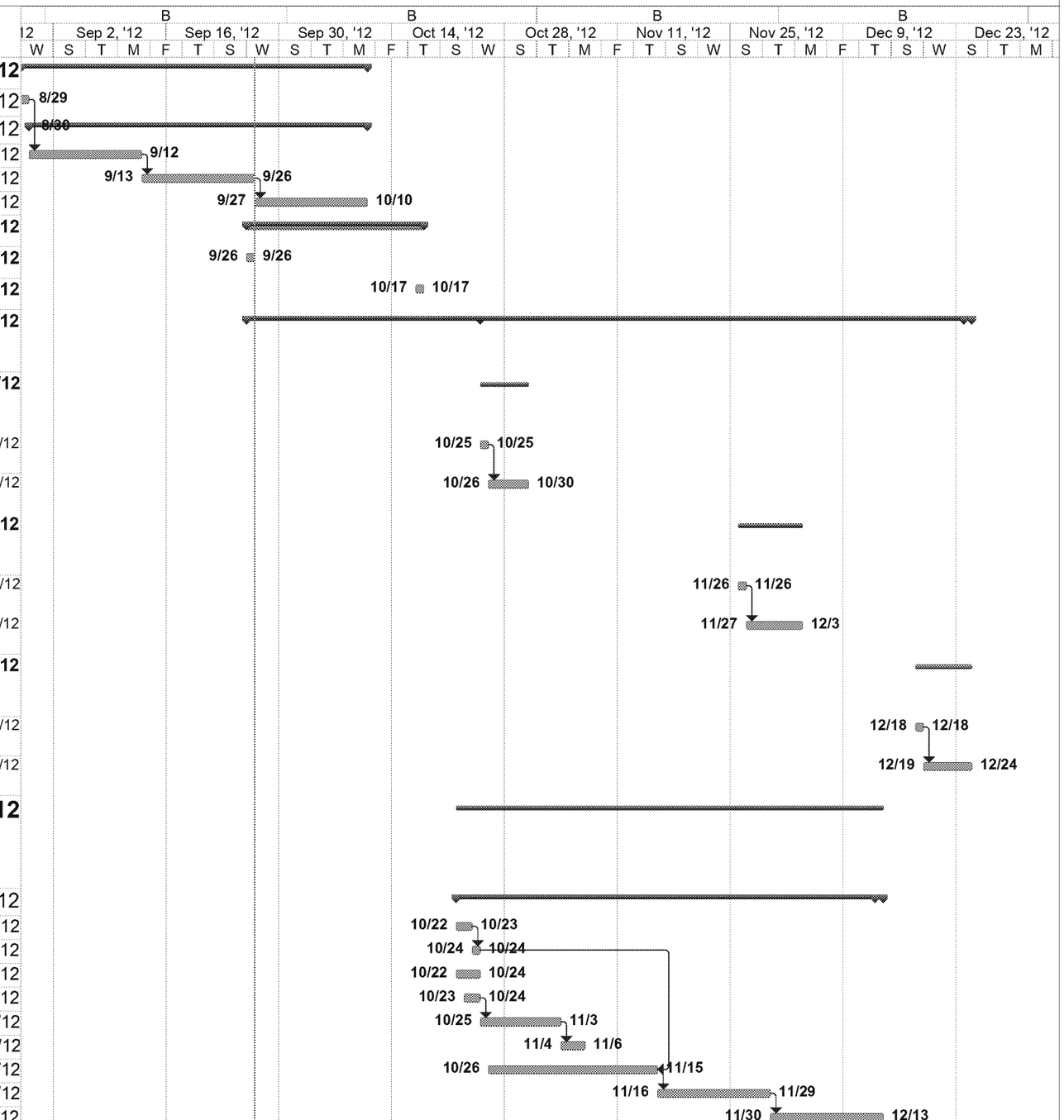


Project: CTO X001_Red Hill_schedule
Date: Thu 9/27/12

Task | Milestone | Summary | Rolled Up Milestone | Inactive Task | Inactive Task | Inactive Milestone | Inactive Summary | Manual Task | Duration-only | Manual Summary Rollup | Manual Summary | Start-only | Finish-only | Progress | Deadline

# APPENDIX B

# FIELD FORMS

*This Page Intentionally Left Blank*

# Fuel Product Monitoring Log

**Field Report Number**

**Contract No.:** N62742-12-D-1853 **CTO:** 0002 **ESI Job No.:** 112066

**Project Title:** Long-Term Monitoring, Red Hill Bulk Fuel Storage Facility

**Location:** JBPHH, Hawaii **Date:**

**Personnel:** **Instrument Type/No.:** **Solinst Interface Meter**

| Well ID | Gauge Time | Well Depth (feet bMP) | Depth to Product (feet bMP) | Depth to Groundwater (feet bMP) | | Comments - Other Observations |
|---|---|---|---|---|---|---|
| | | | | | | |
| | | | | | | |
| | | | | | | |
| | | | | | | |
| | | | | | | |
| | | | | | | |
| | | | | | | |
| | | | | | | |
| | | | | | | |
| | | | | | | |
| | | | | | | |
| | | | | | | |
| | | | | | | |
| | | | | | | |
| | | | | | | |
| | | | | | | |
| | | | | | | |
| | | | | | | |
| | | | | | | |

***NOTES:*** bMP = below measuring point

***Comments:***

# Groundwater Sampling Log

Well ID: _____ Location: Red Hill Bulk Fuel Storage Facility Project No.: _____

Initial Water Level: _____ Date: _____ Time: _____

Total Depth of Well: _____ Personnel Involved: _____

Length of Saturated Zone: _____ Weather Conditions: _____

Volume of Water to be Removed: _____ Method of Removal: _____

Water Level After Purging: _____ Pumping Rate: _____

Well Purge Data:

| Time | Volume Removed | pH | Conductivity (mS/cm) | DO (mg/l) | Temperature | Salinity | Redox (ORP) (mV) |
|---|---|---|---|---|---|---|---|
| | | | | | | | |
| | | | | | | | |
| | | | | | | | |
| | | | | | | | |
| | | | | | | | |
| | | | | | | | |
| | | | | | | | |
| | | | | | | | |
| | | | | | | | |
| | | | | | | | |
| | | | | | | | |
| | | | | | | | |

Sample Withdrawal Method: _____

Appearance of Sample:

Color: _____

Turbidity: _____

Sediment: _____

Other: _____

Laboratory Analysis Parameters and Preservatives: _____

_____

Number and Types of Sample Containers: _____

Sample Identification Numbers: _____

Decontamination Procedures: _____

Notes: _____

Sampled by: _____

Sampled Delivered to: _____ Transporters: _____

Date: _____ Time: _____

Capacity of Casing (Gallons/Linear Feet)

2"-0.16 • 4"-0.65 • 8"-2.61 • 10"-4.08 • 12"-5.87

# Soil Vapor Monitoring Log

**Field Report Number**

**Contract No.:** N62742-12-D-1853 **CTO:** 0002 **ESI Job No.:** 112066
**Project Title:** Long-Term Monitoring, Red Hill Bulk Fuel Storage Facility
**Location:** JBPHH, Hawaii **Date:**
**Personnel:** **Instrument Type/No.:** RAE or equivalent
**Calibration:** CH4: CO2: O2: Hg:

| SVMP No. | Avg. Shallow Range | Avg. Mid. Range | Avg. Deep Range | Pressure Open | Pressure Closed | % LEL n/a | Sample Time | Comments |
|---|---|---|---|---|---|---|---|---|
| SVMP-02 | | | | | | | | |
| SVMP-03 | | | | | | | | |
| SVMP-04 | | | | | | | | |
| SVMP-05 | | | | | | | | |
| SVMP-06 | | | | | | | | |
| SVMP-07 | | | | | | | | |
| SVMP-08 | | | | | | | | |
| SVMP-09 | | | | | | | | |
| SVMP-10 | | | | | | | | |
| SVMP-11 | | | | | | | | |
| SVMP-12 | | | | | | | | |
| SVMP-13 | | | | | | | | |
| SVMP-14 | | | | | | | | |
| SVMP-15 | | | | | | | | |
| SVMP-16 | | | | | | | | |
| SVMP-17 | | | | | | | | |
| SVMP-18 | | | | | | | | |
| SVMP-20 | | | | | | | | |
| Office Structure: | | | | | | | | |

***NOTES:*** LEL = lower explosive limit which is 5% by volume for methane ($CH_4$)
White = Deep, Blue = Mid, Orange = Shallow

***Comments:***

# APPENDIX C

# STANDARD OPERATING PROCEDURES

*This Page Intentionally Left Blank*

**Standard Operating Procedures for Soil Vapor Monitoring**

**Red Hill Bulk Fuel Storage Facility**
**Naval Supply System Command (NAVSUP) Fleet Logistics Center,**
**Joint Base Pearl Harbor-Hickam**

I. Monitoring Equipment
   a. ppbRAE Plus gas monitor (photo-ionization detector (PID))
   b. Sample pump
   c. 10 ppm isobutylene calibration gas
   d. VOC zeroing tube
   e. Vacuum chamber
   f. Dedicated field notebook
   g. Field forms
   h. Box of nitrile gloves
   i. Flashlight
   j. 15/16 socket and ratchet drive

II. Set up Procedures
   a. Calibrate ppbRAE Plus
      i. Zero calibrate the ppbRAE Plus outside of the tunnel by attaching the glass VOC zeroing tube and the tube adaptor directly onto the ppbRAE probe. The VOC zeroing tube is single use (THROW AWAY AFTER SINGLE USE).
      ii. Span calibrate with 10 ppm isobutylene calibration gas.
      iii. DO NOT attach the plastic filter until after the PID has been calibrated.
      iv. Check the difference in readings after attaching the plastic filter. If the filter is used it may raise the ambient readings significantly. If so, change the filter to a new one.
   b. Place all equipment next to the well being tested.
   c. Open the well cover with the 15/16 socket and ratchet drive (place the cover and bolts at a convenient location out of the way).
   d. Identify the deep, medium, and shallow probes using the reflective tags attached, or the color coded tape (white=deep; blue=mid; orange/yellow=shallow).

III. Sampling Procedures
   a. Purging
      i. Connect the first probe purge tube to the intake nozzle on the pump.
      ii. Open the probe purge valve by making it parallel to the rest of the apparatus.
      iii. Turn on the pump and purge at a rate of less than 200 milliliters per minute (record purge time).
   b. While Purging

i. Place the tedlar bag inside the vacuum chamber. Each probe should have a dedicated tedlar bag with color coded tape (stored in a Ziploc® bag inside the well).
ii. Connect the tygon tube to the tedlar bag inside the vacuum chamber, then open the bag's valve. Connect the other end of the tygon tube to the vacuum chamber's inside "sample inlet port".
iii. Close the vacuum chamber to create an air tight seal.
iv. Attach a ¼-inch tygon tube to the vacuum chamber's outside "vacuum outlet port". The other end of this tygon tube will connect to the sample pump after purging is completed.

c. Collecting Samples and VOC Measurements
   i. Once purging is complete, turn off the pump then detach the probe purge tube from the pump.
   ii. Attach the ¼ inch tygon tube, which is attached to the vacuum chamber's "vacuum outlet port," to the pump.
   iii. Using another tygon tube (and attachments, if necessary), connect the probe purge tube to the "sample inlet port" on the vacuum chamber.
   iv. Be sure the tedlar bag valve and probe purge valves are open.
   v. Start the pump and cover the compression hole (on the vacuum chamber) to fill the tedlar bag. (Note: When activated, the pump evacuates air from inside the chamber. The sample bag inflates as a result of the interior pressure drop. The air from the probe is sampled directly into the bag without passing through the pump.)
   vi. Observe the bag to prevent overfilling.
   vii. Once the bag is full, open the vacuum chamber, close the bag's valve, then turn off the pump (if air is escaping from the bag when the lid is opened, then try again, however, only partially cover the compression hole to relieve the pressure in the chamber while vapors are slowly collected in the tedlar bag).
   viii. Detach the tedlar bag and reattach it to the PID.
   ix. Be sure the PID is on survey mode, open the bag valve and begin testing.
   x. **Once numbers begin to appear** on the PID screen take readings every 10 seconds for 30 seconds.
   xi. Once the 30 seconds is up, press "MODE" then "Y" to stop.
   xii. The average will be taken from the 3 recorded values from the PID.
   xiii. Place the PID back on survey mode.
d. Close the probe purge valve and begin purging the next probe.
e. While purging
   i. Deflate the tedlar bag and begin preparations for the next sample with the appropriate dedicated tygon tubing.
   ii. Continue this process until all points at the location have been tested.

IV. Tear Down Procedures
   a. Close all soil vapor monitoring probe purge valves.
   b. Return the dedicated tedlar bags to the Ziploc® bag and place back in the well, then secure the well cover.

c. Be sure to test the PID in the main tunnel between each location, record background levels (if it reads more than typical background for the day, change the plastic filter).

**Standard Operating Procedures for Fuel Product Monitoring**

**Red Hill Bulk Fuel Storage Facility**
**Naval Supply System Command (NAVSUP) Fleet Logistics Center,**
**Joint Base Pearl Harbor-Hickam**

I. Equipment
   a. Solinst® Model 122 Interface Meter
   b. 15/16 socket and ratchet drive
   c. Field forms
   d. Field notebook
   e. Level D personal protective equipment (PPE)
   f. Nitrile gloves
   g. Flashlight
   h. Decontamination equipment
      i. Distilled water
      ii. Alconox
      iii. Brush
      iv. Paper towels

II. Set up Procedures
   a. Decontaminate the Solinst® Model 122 Interface Meter.
      i. Using paper towels, wipe the measuring tape of the Solinst® Model 122 Interface Meter.
      ii. Decontaminate the Solinst® Model 122 Interface Meter and the portion of the measuring tape which had possible contact with well water using a solution of Alconox and distilled water.
      iii. Triple rinse with distilled water.

III. Water level gauging and measuring for the presence of light non-aqueous phase liquids (LNAPLs)
   a. Lower the Solinst® Model 122 Interface Meter into the well to determine the depth of water (measure to the nearest 0.01 foot) and the existence of any immiscible layer(s), LNAPL, and record the measurements. *Note: an intermittent beep means that water is detected. A continuous/solid beep means that fuel product (LNAPL) has been detected.*
   b. Confirm the presence or absence of an immiscible phase by slowly lowering a clear bailer to the appropriate depth, then visually observing the results after sample recovery.
   c. In rare instances, such as when very viscous product is present, it may be necessary to utilize hydrocarbon- and water-sensitive pastes for measurement of LNAPL thickness.
      i. Smear adjacent, thin layers of both hydrocarbon- and water-sensitive pastes along a steel measuring tape and insert the tape into the well.

ii. Record depth to water (an engineering tape showing tenths and hundredths of feet is required), as shown by the mark on the water-sensitive paste, and depth to product, as shown by the mark on the product-sensitive paste. In wells where the approximate depth to water and product thickness are not known, it is best to apply both pastes to the tape over a fairly long interval (5 feet or more). Under these conditions, measurements are obtained by trial and error, and may require several insertions and retrievals of the tape before the paste-covered interval of the tape encounters product and water. In wells where approximate depths of air-product and product-water interfaces are known, pastes may be applied over shorter intervals. Water depth measurements should not be used in preparation of water-table contour maps until they are corrected for depression by the product.

IV. Decontamination Procedures

a. Decontaminate the Solinst® Model 122 Interface Meter.

i. See set up procedures.

Reference: The Department of the Navy. *Project Procedure Manual U.S. Navy Environmental Restoration Program NAVFAC Pacific*. February 2007.

# APPENDIX D

# DOH ENVIRONMENTAL ACTION LEVELS

*This Page Intentionally Left Blank*

| Analytes | DOH EAL (ug/L) | | PAL (ug/L) | PQL Goal (ug/L) | Laboratory-Specific Limits | | |
|---|---|---|---|---|---|---|---|
| | Drinking Water Toxicity | Gross Contamination | | | LOQs (ug/L) | LODs (ug/L) | MDLs (ug/L) |
| Analytical Group: VOCs (EPA- 8260B) | | | | | | | |
| 1,1,1-Trichloroethane | 200 | 970 | 200 | 20 | 5.0 | 0.5 | 0.303 |
| 1,1,2-Trichloroethane | 5 | 50,000 | 5 | 0.5 | 1.0 | 0.5 | 0.384 |
| 1,1-Dichloroethane | 2.4 | 50,000 | 2.4 | 0.24 | 5.0* | 0.5 | 0.281 |
| 1,1-Dichloroethylene | 7 | 1,500 | 7 | 0.7 | 1.0 | 0.5 | 0.431 |
| 1,2,3-Trichloropropane | 0.6 | 50,000 | 0.6 | 0.06 | 5.0* | 2.0 | 0.637 |
| 1,2,4-Trichlorobenzene | 70 | 3,000 | 70 | 7 | 5.0 | 2.0 | 0.500 |
| 1,2-Dibromo-3-chloropropane | 0.04 | 10 | 0.04 | 0.004 | 10.0* | 2.0 | 1.24 |
| 1,2-Dibromoethane | 0.04 | 50,000 | 0.0065 | 0.00065 | 1.0* | 0.5 | 0.362 |
| 1,2-Dichlorobenzene | 600 | 10 | 10 | 1.0 | 1.0 | 0.5 | 0.456 |
| 1,2-Dichloroethane | 0.15 | 7,000 | 0.15 | 0.015 | 1.0* | 0.5 | 0.241 |
| 1,2-Dichloropropane | 5 | 10 | 5 | 0.5 | 1.0 | 0.5 | 0.423 |
| 1,3-Dichlorobenzene | 180 | 5 | 180 | 18 | 1.0 | 0.5 | 0.399 |
| 1,3-Dichloropropene (total of cis/trans) | 0.43 | 50,000 | 0.43 | 0.043 | 1.0* | 0.5 | 0.245 |
| 1,4-Dichlorobenzene | 75 | 5 | 5 | 0.5 | 1.0 | 0.5 | 0.431 |
| Acetone | 22,000 | 20,000 | 20,000 | 2,000 | 20.0 | 10.0 | 6.04 |
| Benzene | 5 | 170 | 5 | 0.5 | 1.0 | 0.5 | 0.142 |
| Bromodichloromethane | 0.12 | 50,000 | 0.22 | 0.022 | 5.0* | 0.5 | 0.206 |
| Bromoform | 80 | 510 | 100 | 10 | 10.0 | 2.0 | 0.503 |
| Bromomethane | 8.7 | 50,000 | 8.7 | 0.87 | 20.0* | 5.0 | 3.88 |
| Carbon Tetrachloride | 5 | 520 | 5 | 0.5 | 1.0 | 0.5 | 0.226 |
| Chlorobenzene | 100 | 50 | 50 | 5 | 5.0 | 0.5 | 0.171 |
| Chloroethane | 21,000 | 16 | 16 | 1.6 | 10.0 | 5.0 | 2.29 |
| Chloroform | 70 | 2,400 | 70 | 7 | 5.0 | 0.5 | 0.461 |
| Chloromethane | 1.8 | 50,000 | 1.8 | 0.18 | 10.0* | 2.0 | 1.76 |
| cis-1,2-Dichloroethylene | 70 | 50,000 | 70 | 7 | 1.0 | 0.5 | 0.476 |
| Dibromochloromethane | 0.16 | 50,000 | 0.16 | 0.016 | 1.0* | 0.5 | 0.248 |
| Ethylbenzene | 700 | 30 | 30 | 3 | 1.0 | 0.5 | 0.138 |
| Hexachlorobutadiene | 0.86 | 6 | 0.86 | 0.086 | 1.0* | 0.5 | 0.320 |
| Methyl ethyl ketone (2-Butanone) | 7,100 | 8,400 | 7,100 | 710 | 10.0 | 5.0 | 2.21 |
| Methyl isobutyl ketone (4-Methyl-2-Pentanone) | 2,000 | 1,300 | 1,300 | 130 | 10.0 | 5.0 | 4.40 |
| Methyl tert-butyl Ether | 12 | 5 | 5 | 0.5 | 1.0 | 0.5 | 0.310 |
| Methylene chloride | 4.8 | 9,100 | 4.8 | 0.48 | 5.0* | 2.0 | 0.637 |
| Styrene | 100 | 10 | 10 | 1 | 1.0 | 0.5 | 0.172 |
| Tetrachloroethane, 1,1,1,2- | 0.52 | 50,000 | 0.52 | 0.052 | 1.0* | 0.5 | 0.405 |
| Tetrachloroethane, 1,1,2,2- | 0.067 | 500 | 0.067 | 0.0067 | 1.0* | 0.5 | 0.409 |
| Tetrachloroethylene | 5 | 170 | 5 | 0.5 | 5.0 | 0.5 | 0.387 |
| Toluene | 1,000 | 40 | 40 | 4 | 1.0 | 0.5 | 0.236 |

| Analytes | DOH EAL (ug/L) | | PAL (ug/L) | PQL Goal (ug/L) | Laboratory-Specific Limits | | |
|---|---|---|---|---|---|---|---|
| | Drinking Water Toxicity | Gross Contamination | | | LOQs (ug/L) | LODs (ug/L) | MDLs (ug/L) |
| trans-1,2-Dichloroethylene | 100 | 260 | 100 | 10 | 1.0 | 0.5 | 0.368 |
| Trichloroethylene | 5 | 310 | 5 | 0.5 | 1.0 | 0.5 | 0.368 |
| Vinyl chloride | 2 | 3,400 | 2 | 0.2 | 1.0 | 0.5 | 0.301 |
| Xylenes | 10000 | 20 | 20 | 2 | 10.0 | 1.0 | 0.243 |
| Analytical Group: PAHs (EPA 8270C SIM) | | | | | | | |
| Acenaphthene | 370 | 20 | 20 | 2 | 0.2 | 0.05 | 0.021 |
| Acenaphthylene | 240 | 2,000 | 240 | 24 | 0.2 | 0.05 | 0.018 |
| Anthracene | 1,800 | 22 | 22 | 2.2 | 0.2 | 0.05 | 0.034 |
| Benzo[a]anthracene | 0.092 | 4.7 | 0.092 | 0.0092 | 0.2* | 0.05 | 0.024 |
| Benzo[g,h,i]perylene | 1,500 | 0.13 | 0.13 | 0.013 | 0.2* | 0.05 | 0.022 |
| Benzo[a]pyrene | 0.2 | 0.81 | 0.2 | 0.02 | 0.2 | 0.05 | 0.036 |
| Benzo[b]fluoranthene | 0.092 | 0.75 | 0.092 | 0.0092 | 0.2* | 0.05 | 0.025 |
| Benzo[k]fluoranthene | 0.92 | 0.4 | 0.4 | 0.04 | 0.2* | 0.05 | 0.023 |
| Chrysene | 9.2 | 1 | 1 | 0.1 | 0.2 | 0.05 | 0.019 |
| Dibenzo[a,h]anthracene | 0.0092 | 0.52 | 0.0092 | 0.00092 | 0.2* | 0.05 | 0.027 |
| Fluoranthene | 1500 | 130 | 130 | 13 | 0.2 | 0.05 | 0.027 |
| Fluorene | 240 | 950 | 240 | 24 | 0.2 | 0.05 | 0.024 |
| Ideno[1,2,3-cd]pyrene | 0.092 | 0.095 | 0.092 | 0.0092 | 0.2* | 0.05 | 0.022 |
| 1,-Methylnaphthalene | 4.7 | 10 | 4.7 | 0.47 | 0.2 | 0.05 | 0.028 |
| 2,-Methylnaphthalene | 24 | 10 | 10 | 1 | 0.2 | 0.05 | 0.026 |
| Naphthalene | 17 | 21 | 17 | 1.7 | 0.2 | 0.05 | 0.023 |
| Phenanthrene | 240 | 410 | 240 | 24 | 0.2 | 0.05 | 0.031 |
| Pyrene | 180 | 68 | 68 | 6.8 | 0.2 | 0.05 | 0.025 |
| Analytical Group: TPH | | | | | | | |
| TPH as Gasoline (EPA 8015B) | 100 | 100 | 100 | 10 | 200* | 100 | 44 |
| TPH as Diesel (EPA 8015B) | 190 | 100 | 100 | 10 | 100 | 20 | 15 |
| Analytical Group: Total Lead (EPA 6020) | | | | | | | |
| Lead | 15 | 50,000 | 15 | 1.5 | 1.0 | 0.5 | 0.219 |

Note: All units are in micrograms per liter (µg/L).

DOH EAL – State of Hawaii Department of Health Hazard Evaluation and Emergency Response Office Environmental Action Levels for sites where groundwater is a current drinking water source and surface water is greater that than 150 meters from the site - January 2012.

LOD – Limit of Detection

LOQ – Limit of Quantification

MDL –method detection limit

PAL – project action level

PQL - project quantification limit

* - In the case where an EAL for a specific chemical is less than the LOQ for a commercial laboratory, it is generally acceptable to consider the LOQ in place of the actions level.

# Appendix D

# DOH Quarterly Deliverables Examples

**Table 1. Analytical Results for Quarterly Groundwater Sampling Release Response Report, March 27, 2007**
**Red Hill Fuel Storage Facilty, Hawaii**

| Method | Chemical | HDOH Residential Drinking Water EALs[1] UG/L | HDOH Drinking Water Ceiling EALs[2] UG/L | RHMW01 UG/L March 27, 2007 | | | | RHMW02 UG/L March 27, 2007 | | | | RHMW02D- UG/L March 27, 2007 | | | | RHMW03 UG/L March 27, 2007 | | | | RHMW2254-01 UG/L March 27, 2007 | | | |
|---|---|---|---|---|---|---|---|---|---|---|---|---|---|---|---|---|---|---|---|---|---|---|---|
| | | | | Result | Q | MDL | RL | Result | Q | MDL | RL | Result | Q | MDL | RL | Result | Q | MDL | RL | Result | Q | MDL | RL |
| SW8015V | TPH as GASOLINE RANGE ORGANICS | 100 | 100 | ND | U | 50 | 100 | *122* | 0 | 50 | 100 | *148* | 0 | 50 | 100 | ND | U | 50 | 100 | ND | U | 50 | 100 |
| SW8015E | PETROLEUM HYDROCARBONS ABOVE C-10 | 100 | 100 | *307* | 0 | 98 | 250 | *2750* | 0 | 97 | 240 | *2250* | 0 | 190 | 490 | 95.7 | J | 95 | 240 | ND | U | 98 | 250 |
| SW8260B | 1,1,1,2-TETRACHLOROETHANE | 0.43 | 50000 | ND | U | 0.5 | 1 | ND | U | 0.5 | 1 | ND | U | 0.5 | 1 | ND | U | 0.5 | 1 | ND | U | 0.5 | 1 |
| | 1,1,1-TRICHLOROETHANE | 200 | 970 | ND | U | 0.5 | 1 | ND | U | 0.5 | 1 | ND | U | 0.5 | 1 | ND | U | 0.5 | 1 | ND | U | 0.5 | 1 |
| | 1,1,2,2-TETRACHLOROETHANE | 0.056 | 500 | ND | U | 0.4 | 1 | ND | U | 0.4 | 1 | ND | U | 0.4 | 1 | ND | U | 0.4 | 1 | ND | U | 0.4 | 1 |
| | 1,1,2-TRICHLOROETHANE | 5 | 50000 | ND | U | 0.5 | 1 | ND | U | 0.5 | 1 | ND | U | 0.5 | 1 | ND | U | 0.5 | 1 | ND | U | 0.5 | 1 |
| | 1,2,4-TRICHLOROBENZENE | 70 | 3000 | ND | U | 0.5 | 1 | ND | U | 0.5 | 1 | ND | U | 0.5 | 1 | ND | U | 0.5 | 1 | ND | U | 0.5 | 1 |
| | 1,2-DIBROMO-3-CHLOROPROPANE (DBCP) | 0.04 | 10 | ND | U | 1 | 2 | ND | U | 1 | 2 | ND | U | 1 | 2 | ND | U | 1 | 2 | ND | U | 1 | 2 |
| | 1,2-DICHLOROPROPANE | 5 | 10 | ND | U | 0.5 | 1 | ND | U | 0.5 | 1 | ND | U | 0.5 | 1 | ND | U | 0.5 | 1 | ND | U | 0.5 | 1 |
| | 1,3-DICHLOROBENZENE | 180 | 50000 | ND | U | 0.5 | 1 | ND | U | 0.5 | 1 | ND | U | 0.5 | 1 | ND | U | 0.5 | 1 | ND | U | 0.5 | 1 |
| | 1,3-DICHLOROPROPANE | 0.4 | 50000 | ND | U | 0.5 | 1 | ND | U | 0.5 | 1 | ND | U | 0.5 | 1 | ND | U | 0.5 | 1 | ND | U | 0.5 | 1 |
| | 1,4-DICHLOROBENZENE | 75 | 5 | ND | U | 0.5 | 1 | ND | U | 0.5 | 1 | ND | U | 0.5 | 1 | ND | U | 0.5 | 1 | ND | U | 0.5 | 1 |
| | ACETONE | 5500 | 20000 | ND | U | 5 | 25 | ND | U | 5 | 25 | ND | U | 5 | 25 | ND | U | 5 | 25 | ND | U | 5 | 25 |
| | BENZENE | 5 | 170 | ND | U | 0.5 | 1 | ND | U | 0.5 | 1 | ND | U | 0.5 | 1 | ND | U | 0.5 | 1 | ND | U | 0.5 | 1 |
| | BROMODICHLOROMETHANE | 0.18 | 50000 | ND | U | 0.5 | 1 | ND | U | 0.5 | 1 | ND | U | 0.5 | 1 | ND | U | 0.5 | 1 | ND | U | 0.5 | 1 |
| | BROMOFORM | 100 | 510 | ND | U | 0.5 | 1 | ND | U | 0.5 | 1 | ND | U | 0.5 | 1 | ND | U | 0.5 | 1 | ND | U | 0.5 | 1 |
| | BROMOMETHANE | 8.5 | 50000 | ND | U | 1 | 2 | ND | U | 1 | 2 | ND | U | 1 | 2 | ND | U | 1 | 2 | ND | U | 1 | 2 |
| | CARBON TETRACHLORIDE | 5 | 520 | ND | U | 0.5 | 1 | ND | U | 0.5 | 1 | ND | U | 0.5 | 1 | ND | U | 0.5 | 1 | ND | U | 0.5 | 1 |
| | CHLOROBENZENE | 100 | 50 | ND | U | 0.5 | 1 | ND | U | 0.5 | 1 | ND | U | 0.5 | 1 | ND | U | 0.5 | 1 | ND | U | 0.5 | 1 |
| | CHLOROETHANE | 3.9 | 16 | ND | U | 1 | 2 | ND | U | 1 | 2 | ND | U | 1 | 2 | ND | U | 1 | 2 | ND | U | 1 | 2 |
| | CHLOROFORM | 100 | 2400 | ND | U | 0.5 | 1 | ND | U | 0.5 | 1 | ND | U | 0.5 | 1 | ND | U | 0.5 | 1 | ND | U | 0.5 | 1 |
| | CHLOROMETHANE | 160 | 50000 | ND | U | 1 | 2 | ND | U | 1 | 2 | ND | U | 1 | 2 | ND | U | 1 | 2 | ND | U | 1 | 2 |
| | cis-1,2-DICHLOROETHYLENE | 70 | 50000 | ND | U | 0.5 | 1 | ND | U | 0.5 | 1 | ND | U | 0.5 | 1 | ND | U | 0.5 | 1 | ND | U | 0.5 | 1 |
| | DIBROMOMETHANE | 0.0056 | 50000 | ND | U | 0.5 | 2 | ND | U | 0.5 | 2 | ND | U | 0.5 | 2 | ND | U | 0.5 | 2 | ND | U | 0.5 | 2 |
| | ETHYLBENZENE | 700 | 30 | ND | U | 0.5 | 1 | ND | U | 0.5 | 1 | ND | U | 0.5 | 1 | ND | U | 0.5 | 1 | ND | U | 0.5 | 1 |
| | HEXACHLOROBUTADIENE | 0.86 | 6 | ND | U | 0.5 | 2 | ND | U | 0.5 | 2 | ND | U | 0.5 | 2 | ND | U | 0.5 | 2 | ND | U | 0.5 | 2 |
| | M,P-XYLENE (SUM OF ISOMERS) | 10000 | 20 | ND | U | 0.5 | 2 | ND | U | 0.5 | 2 | ND | U | 0.5 | 2 | ND | U | 0.5 | 2 | ND | U | 0.5 | 2 |
| | METHYL ETHYL KETONE (2-BUTANONE) | 7000 | 8400 | ND | U | 2.5 | 5 | ND | U | 2.5 | 5 | ND | U | 2.5 | 5 | ND | U | 2.5 | 5 | ND | U | 2.5 | 5 |
| | METHYL ISOBUTYL KETONE (4-METHYL-2-PENTANONE) | 2000 | 1300 | ND | U | 2.5 | 5 | ND | U | 2.5 | 5 | ND | U | 2.5 | 5 | ND | U | 2.5 | 5 | ND | U | 2.5 | 5 |
| | METHYLENE CHLORIDE | 4.3 | 9100 | ND | U | 1 | 5 | ND | U | 1 | 5 | ND | U | 1 | 5 | ND | U | 1 | 5 | ND | U | 1 | 5 |
| | NAPHTHALENE | 6.2 | 21 | ND | U | 1 | 2 | *196* | 0 | 10 | 20 | *207* | 0 | 5 | 10 | ND | U | 1 | 2 | ND | U | 1 | 2 |
| | STYRENE | 100 | 10 | ND | U | 0.5 | 1 | ND | U | 0.5 | 1 | ND | U | 0.5 | 1 | ND | U | 0.5 | 1 | ND | U | 0.5 | 1 |
| | TETRACHLOROETHYLENE(PCE) | 5 | 170 | ND | U | 0.5 | 1 | ND | U | 0.5 | 1 | ND | U | 0.5 | 1 | ND | U | 0.5 | 1 | ND | U | 0.5 | 1 |
| | TOLUENE | 1000 | 40 | ND | U | 0.5 | 1 | ND | U | 0.5 | 1 | ND | U | 0.5 | 1 | ND | U | 0.5 | 1 | ND | U | 0.5 | 1 |
| | trans-1,2-DICHLOROETHENE | 100 | 260 | ND | U | 0.5 | 1 | ND | U | 0.5 | 1 | ND | U | 0.5 | 1 | ND | U | 0.5 | 1 | ND | U | 0.5 | 1 |
| | TRICHLOROETHYLENE (TCE) | 5 | 310 | ND | U | 0.5 | 1 | ND | U | 0.5 | 1 | ND | U | 0.5 | 1 | ND | U | 0.5 | 1 | ND | U | 0.5 | 1 |
| | VINYL CHLORIDE | 2 | 3400 | ND | U | 0.5 | 1 | ND | U | 0.5 | 1 | ND | U | 0.5 | 1 | ND | U | 0.5 | 1 | ND | U | 0.5 | 1 |
| SW8270C | 1-METHYLNAPHTHALENE | 240 | 10 | ND | U | 0.25 | 0.99 | *72.1* | 0 | 0.96 | 3.8 | *59.4* | 0 | 0.96 | 3.8 | ND | U | 0.25 | 0.98 | ND | U | 0.24 | 0.97 |
| | 2-METHYLNAPHTHALENE | 240 | 10 | ND | U | 0.25 | 0.99 | *30.3* | 0 | 0.24 | 0.96 | *26.2* | 0 | 0.24 | 0.96 | ND | U | 0.25 | 0.98 | ND | U | 0.24 | 0.97 |
| | ACENAPHTHENE | 370 | 20 | ND | U | 0.5 | 0.99 | 0.66 | J | 0.48 | 0.96 | 0.56 | J | 0.48 | 0.96 | ND | U | 0.49 | 0.98 | ND | U | 0.49 | 0.97 |
| | ACENAPHTHYLENE | 240 | 2000 | ND | U | 0.5 | 0.99 | ND | U | 0.48 | 0.96 | ND | U | 0.48 | 0.96 | ND | U | 0.49 | 0.98 | ND | U | 0.49 | 0.97 |
| | ANTHRACENE | 1800 | 22 | ND | U | 0.5 | 0.99 | ND | U | 0.48 | 0.96 | ND | U | 0.48 | 0.96 | ND | U | 0.49 | 0.98 | ND | U | 0.49 | 0.97 |
| | BENZO(a)PYRENE | 0.2 | 1.9 | ND | U | 0.099 | 0.2 | ND | U | 0.096 | 0.19 | ND | U | 0.096 | 0.19 | ND | U | 0.098 | 0.2 | ND | U | 0.097 | 0.19 |
| | BENZO(b)FLUORANTHENE | 0.092 | 7 | ND | U | 0.05 | 0.2 | ND | U | 0.048 | 0.19 | ND | U | 0.048 | 0.19 | ND | U | 0.049 | 0.2 | ND | U | 0.049 | 0.19 |
| | BENZO(g,h,i)PERYLENE | 1500 | 0.13 | ND | U | 0.099 | 0.2 | ND | U | 0.096 | 0.19 | ND | U | 0.096 | 0.19 | ND | U | 0.098 | 0.2 | ND | U | 0.097 | 0.19 |
| | BENZO(k)FLUORANTHENE | 0.92 | 0.4 | ND | U | 0.099 | 0.2 | ND | U | 0.096 | 0.19 | ND | U | 0.096 | 0.19 | ND | U | 0.098 | 0.2 | ND | U | 0.097 | 0.19 |
| | CHRYSENE | 9.2 | 0.8 | ND | U | 0.099 | 0.2 | ND | U | 0.096 | 0.19 | ND | U | 0.096 | 0.19 | ND | U | 0.098 | 0.2 | ND | U | 0.097 | 0.19 |
| | DIBENZ(a,h)ANTHRACENE | 0.0092 | 0.25 | ND | U | 0.05 | 0.2 | ND | U | 0.048 | 0.19 | ND | U | 0.048 | 0.19 | ND | U | 0.049 | 0.2 | ND | U | 0.049 | 0.19 |
| | FLUORANTHENE | 1500 | 130 | ND | U | 0.25 | 0.99 | ND | U | 0.24 | 0.96 | ND | U | 0.24 | 0.96 | ND | U | 0.25 | 0.98 | ND | U | 0.24 | 0.97 |
| | FLUORENE | 240 | 950 | ND | U | 0.25 | 0.99 | 0.26 | J | 0.24 | 0.96 | 0.26 | U | 0.24 | 0.96 | ND | U | 0.25 | 0.98 | ND | U | 0.24 | 0.97 |
| | INDENO(1,2,3-c,d)PYRENE | 0.092 | 0.27 | ND | U | 0.05 | 0.2 | ND | U | 0.048 | 0.19 | ND | U | 0.048 | 0.19 | ND | U | 0.049 | 0.2 | ND | U | 0.049 | 0.19 |
| | NAPHTHALENE | 6.2 | 21 | ND | U | 0.25 | 0.99 | *105* | 0 | 0.96 | 3.8 | *90.1* | 0 | 0.96 | 3.8 | ND | U | 0.25 | 0.98 | ND | U | 0.24 | 0.97 |
| | PHENANTHRENE | 240 | 410 | ND | U | 0.5 | 0.99 | ND | U | 0.48 | 0.96 | ND | U | 0.48 | 0.96 | ND | U | 0.49 | 0.98 | ND | U | 0.49 | 0.97 |
| | PYRENE | 180 | 68 | ND | U | 0.25 | 0.99 | ND | U | 0.24 | 0.96 | ND | U | 0.24 | 0.96 | ND | U | 0.25 | 0.98 | ND | U | 0.24 | 0.97 |
| SW6010BFiltered | LEAD | 15 | 50000 | 1.7 | J | 1.7 | 5 | 1.7 | J | 1.7 | 5 | 1.7 | U | 1.7 | 5 | 3 | J | 1.7 | 5 | ND | U | 1.7 | 5 |

UG/L - micrograms per Liter
Q - data qualifier
U - Indicates that the compound was analyzed for but not detected at or above the stated limit
J - Indicates an estimated value
MDL - method detection limit
RL - reporting limit
TPH - Total Petroleum hydrocarbons
ND - Indicates that the compound was analyzed for but not detected at or above the stated limit
200 - Result exceeds one or both HDOH EAL's
[1] Toxicity-based environmental action levels, Table D-2, *Screening For Environmental Concerns At Sites With Contaminated Soil and Groundwater,* HDOH, 2005
[2] Taste, odor and solubility thresholds, Table G-1, *Screening For Environmental Concerns At Sites With Contaminated Soil and Groundwater* , HDOH, 2005

Southeast ACCUTEST Laboratories

11/01/05

# Technical Report for

## The Environmental Company

Red Hill Bulk Storage Facility, HI

7707-009

Accutest Job Number: F35142

Sampling Date: 09/20/05

Report to:

jshart@tecinc.com
snmacmillan@tecinc.com

ATTN: Distribution3

Total number of pages in report: 319

ACCREDITED IN ACCORDANCE WITH nelac

Test results contained within this data package meet the requirements of the National Environmental Laboratory Accreditation Conference and/or state specific certification programs as applicable.

Harry Behzadi, Ph.D.
Laboratory Director

Certifications: FL (DOH E83510), NC (573), NJ (FL002), MA (FL946), IA (366), LA (03051), KS (E-10327), SC, AK

This report shall not be reproduced, except in its entirety, without the written approval of Accutest Laboratories.

# Table of Contents

-1-

**Section 1: Sample Summary** ..... 4
Section 2: Case Narrative/Conformance Summary ..... 5
Section 3: Sample Results ..... 9
3.1: F35142-1: RHMW01W01 ..... 9
3.2: F35142-2: RHMW02W01 ..... 17
3.3: F35142-2A: RHMW02W01 ..... 28
3.4: F35142-3: RHMW03W01 ..... 29
3.5: F35142-3A: RHMW03W01 ..... 40
3.6: F35142-4: RHMW02Q01 ..... 41
3.7: F35142-4A: RHMW02Q01 ..... 52
3.8: F35142-5: RHMW04W01 ..... 53
3.9: F35142-6: RHMW2254W01 ..... 59
3.10: F35142-7: TRIP BLANK ..... 64
**Section 4: Misc. Forms** ..... 67
**4.1:** Chain of Custody ..... 68
Section 5: GC/MS Volatiles - QC Data Summaries ..... 75
5.1: Method Blank Summary ..... 76
5.2: Blank Spike Summary ..... 85
5.3: Matrix Spike/Matrix Spike Duplicate Summary ..... 94
5.4: Instrument Performance Checks (BFB) ..... 103
5.5: Internal Standard Area Summaries ..... 108
5.6: Surrogate Recovery Summaries ..... 111
5.7: Initial and Continuing Calibration Summaries ..... 112
Section 6: GC/MS Semi-volatiles - QC Data Summaries ..... 135
6.1: Method Blank Summary ..... 136
6.2: Blank Spike Summary ..... 138
6.3: Matrix Spike/Matrix Spike Duplicate Summary ..... 139
6.4: Instrument Performance Checks (DFTPP) ..... 140
6.5: Internal Standard Area Summaries ..... 144
6.6: Surrogate Recovery Summaries ..... 146
6.7: Initial and Continuing Calibration Summaries ..... 147
Section 7: GC Volatiles - QC Data Summaries ..... 152
7.1: Method Blank Summary ..... 153
7.2: Blank Spike Summary ..... 158
7.3: Matrix Spike/Matrix Spike Duplicate Summary ..... 163
7.4: Matrix Spike Summary ..... 167
7.5: Duplicate Summary ..... 168
7.6: Surrogate Recovery Summaries ..... 172
7.7: GC Surrogate Retention Time Summaries ..... 174
7.8: Initial and Continuing Calibration Summaries ..... 182
Section 8: GC Semi-volatiles - QC Data Summaries ..... 206
8.1: Method Blank Summary ..... 207

# Table of Contents



8.2: Blank Spike Summary ..... 209
8.3: Matrix Spike/Matrix Spike Duplicate Summary ..... 212
8.4: Duplicate Summary ..... 214
8.5: Surrogate Recovery Summaries ..... 215
8.6: GC Surrogate Retention Time Summaries ..... 217
8.7: Initial and Continuing Calibration Summaries ..... 220
Section 9: Metals Analysis - QC Data Summaries ..... 230
9.1: Inst QC MA4585: Ca,Pb,Mg,K,Na ..... 231
9.2: Inst QC MA4590: Ca ..... 246
9.3: Prep QC MP8655: Ca,Pb,Mg,K,Na ..... 269
9.4: IDL and Linear Range Summaries ..... 274
**Section 10: General Chemistry - QC Data Summaries ..... 276**
**10.1:** Method Blank and Spike Results Summary ..... 277
**10.2:** Duplicate Results Summary ..... 278
**10.3:** Matrix Spike Results Summary ..... 279
**10.4:** Matrix Spike Duplicate Results Summary ..... 280
**10.5:** Inst QC GN18504: Chloride,Fluoride ..... 281
**10.6:** Inst QC GN18624: Sulfate ..... 283
**10.7:** Inst QC GN18626: Sulfate ..... 286
**Section 11: Metals Analysis - QC Data (Accutest New Jersey) ..... 289**
**11.1:** Inst QC MA16401: Sr ..... 290
**11.2:** Prep QC MP31729: Sr ..... 313
**11.3:** IDL and Linear Range Summaries ..... 318

# Appendix E

# Groundwater Treatment Technologies

| 1. COMPONENT | FY 07 MILITARY CONSTRUCTION PROJECT DATA | 2. DATE |
|---|---|---|
| NAVY | | AUG 1999 |

| 3. INSTALLATION AND LOCATION/UIC: N62755 | 4. PROJECT TITLE |
|---|---|
| NAVY PUBLIC WORKS CENTER<br>PEARL HARBOR, HAWAII | WATER PURIFICATION FACILITY AT<br>WAIAWA WATER PUMPING PLANT |

| 5. PROGRAM ELEMENT | 6. CATEGORY CODE | 7. PROJECT NUMBER | 8. PROJECT COST ($000) |
|---|---|---|---|
| | 841.10 | P-489 | 28,300 |

9. COST ESTIMATES

| ITEM | U/M | QUANTITY | UNIT COST | COST ($000) |
|---|---|---|---|---|
| WATER PURIFICATION FACILITY | LS | | | 24,420 |
| GAC WATER TREATMENT FILETERS | EA | 45 | 483,778 | ( 21,770 ) |
| MODIFY EXISTING WAIAWA PUMPS | EA | 4 | 552,500 | ( 2,090 ) |
| LABORATORY | $m^2$ | 56 | 10,000 | ( 560 ) |
| SUPPORTING FACILITIES | SL | | | 910 |
| SUBTOTAL | | | | 25,330 |
| CONTINGENCY (5%) | | | | 1,729 |
| TOTAL CONTRACT COST | | | | 26,597 |
| SIOH (6.5%) | | | | 1,729 |
| TOTAL REQUEST | | | | 28,326 |
| TOTAL REQUEST (ROUNDED) | | | | 28,300 |
| EQUIPMENT FROM OTHER APPROPRIATIONS | | | (NON-ADD) | ( 90 ) |
| COLLATERAL EQUIPMENT | | | | ( 0 ) |

**GUIDANCE COST ANALYSIS**

| CATEGORY CODE | U/M | GUIDANCE COST | GUIDANCE SIZE | PROJECT SCOPE | SIZE FACTOR | AREA COST FACTOR | ADJ UNIT COST |
|---|---|---|---|---|---|---|---|
| NOT APPLICABLE | | | | | | | |

**10. DESCRIPTION OF PROPOSED CONSTRUCTION**

Construct a water purification facility and appurtenances for the removal of dibromochloropropane (DBCP) and trichloropropane (TCP) pesticides from the Waiawa Water Pumping Plant. The proposed construction will include a granular activated carbon (GAC) filter system with pumps, concrete tanks, mechanical piping, and electrical controls. Existing pumps at the Waiawa Water Pumping Plant will be modified as required. A 56 $m^2$ (600 SF) laboratory for analysis of water samples for DBCP and TCP will also be constructed.

**11. REQUIREMENT:** _____ $m^2$ Adequate: _____ $m^2$ Substandard: _____ $m^2$

Non-BFR Item

(CONTINUED ON DD1391C+)

**REQUIRED PRE-PCE STUDIES**

N/A.

**NEPA COMPLIANCE**

ANTICIPATED NEPA DOCUMENTATION REQUIRED FOR THIS PROJECT IS: CATEX X EA ___ EIS ___.

START DATE TO SUPPORT PROPOSED FISCAL YEAR IS: Jul 2005 ESTIMATED COMPLETION DATE IS: Sept 2005.

TOTAL ESTIMATED COST FOR NEPA AND ASSOCIATED STUDIES IS: $ 3,000 .

| 1. COMPONENT NAVY | FY 07 MILITARY CONSTRUCTION PROJECT DATA | 2. DATE AUG 1999 |
|---|---|---|

3. INSTALLATION AND LOCATION
NAVY PUBLIC WORKS CENTER
PEARL HARBOR, HAWAII

| 4. PROJECT TITLE | 5. PROJECT NUMBER |
|---|---|
| WATER PURIFICATION FACILITY AT WAIAWA WATER PUMPING PLANT | P-489 |

SCOPE:

The scope was derived using the State of Hawaii, Department of Health (DOH) Administrative Rules (HAR) Title 11, Chapter 20: Rules Relating to Potable Water Systems (11-20-4) which regulates both DBCP and TCP, and the Environmental Protection Agency (EPA) 40 CFR Part 141: National Primary Drinking Water Regulations (40 CFR 141.24) which also regulates DBCP.

PROJECT:

This project will construct a water purification facility and laboratory in compliance with State DOH and EPA regulations. (Current Mission)

REQUIREMENT:

A safe and reliable water system is required to support the Navy community. The Waiawa Pumping Plant provides approximately 65 to 75 percent of the fresh water requirement for the Pearl Harbor complex. Other Navy water sources will not be able to meet the increased daily water demand caused by closure of this plant, even by pumping at higher rates (which reduces water quality). The proposed water purification facility is required to reduce levels of DBCP and TCP pesticides in the Navy's water supply. A testing laboratory is also required for analysis of water samples to ensure that levels of DBCP or TCP do not exceed acceptable limits.

The mission of Navy Public Works Center (PWC) is to be the Navy's Regional Public Works provider and serve the Navy, Marine Corps team, DoD and other Governmental agencies in Hawaii. PWC is committed to giving their customers the best value possible in terms of service and cost.

CURRENT SITUATION:

Trace amounts of DBCP and TCP pesticides were discovered in the Navy's Waiawa water supply. The State Department of Health (DOH) has advised the Navy of possible closure of Waiawa wells if the concentration of DBCP or TCP exceed acceptable levels. The Waiawa Water Pumping Plant does not have treatment facilities for the removal of DBCP or TCP contaminants. Similarly, there are no treatment facilities within the Pearl Harbor Naval Complex water distribution system for removal of DBCP or TCP. These contaminants pose a serious health problem to water users in Pearl Harbor. With the possible closure of the Waiawa water source by the DOH and EPA due to DBCP and TCP contamination, the Navy will not be able to satisfy the daily water demand. Dependence on other Navy water sources to meet the demand could seriously jeopardize the quality of groundwater in these areas because of salt water intrusion and lowering of the water table.

IMPACT IF NOT PROVIDED:

If DBCP and TCP pesticides are detected and exceed acceptable level, these contaminants pose a serious health problem to water users and will require the closure of the Waiawa water source. The Navy will not be able to satisfy the daily water demand and will seriously impact fleet readiness.

Technology>> Ground Water, Surface Water, and Leachate
>>3.10 In Situ Physical/Chemical Treatment
>>4.36 Dual Phase Extraction

Introduction>> A high vacuum system is applied to simultaneously remove various combinations of contaminated ground water, separate-phase petroleu product, and hydrocarbon vapor from the subsurface.

## Description:

Figure 4-36:
Typical Dual Phase Extraction Schematic

Dual-phase extraction (DPE), also known as multi-phase extraction, vacuum-enhanced extraction, or sometimes bioslurping, is a technology that uses a high vacuum system to remove various combinations of contaminated ground water, separate-phase petroleum product, and hydrocarbon vapor from the subsurface. Extracted liquids and vapor are treated and collected for disposal, or re-injected to the subsurface (where permissible under applicable state laws).

In DPE systems for liquid/vapor treatment, a high vacuum system is utilized to remove liquid and gas from low permeability or heterogeneous formations. The vacuum extraction well includes a screened section in the zone of contaminated soils and ground water. It removes contaminants from above and below the water table. The system lowers the water table around the well, exposing more of the formation. Contaminants in the newly exposed vadose zone are then accessible to vapor extraction. Once above ground, the extracted vapors or liquid-phase organics and ground water are separated and treated. DPE for liquid/vapor treatment is generally combined with bioremediation, air sparging, or bioventing when the target contaminants include long-chained hydrocarbons. Use of dual phase extraction with these technologies can shorten the cleanup time at a site. It also can be used with pump-and-treat technologies to recover ground water in higher-yielding aquifers.

TOP

## Synonyms:

Multi-phase extraction; Vacuum-enhanced extraction; Free product recovery; Liquid-Liquid Extraction.
DSERTS Code:

(Dual-phase extraction)
F13 (Free product recovery)

## Applicability:

The target contaminant groups for dual phase extraction are VOCs and fuels (e.g., LNAPLs). Dual phase vacuum extraction is more effective than SVE for heterogeneous clays and fine sands. However, it is not recommended for lower permeability formations due to the potential to leave isolated lenses of undissolved product in the formation.

TOP

## Limitations:

Factors that may limit the applicability and effectiveness of the process include:

- Site geology and contaminant characteristics/distribution.
- Combination with complementary technologies (e.g., pump-and-treat) may be required to recover ground water from high yielding aquifers.
- Dual phase extraction requires both water treatment and vapor treatment.

TOP

## Data Needs:

A detailed discussion of these data elements is provided in Subsection 2.2.2. (Data Requirements for Ground Water, Surface Water, and Leachate).

Data needs include physical and chemical properties of the product released (e.g., viscosity, density, composition, depth, and solubility in water); soil properties (e.g., capillary forces, effective porosity, moisture content, organic content, hydraulic conductivity, and texture); nature of the release (e.g., initial date of occurrence, duration, volume, and rate); geology (e.g., stratigraphy that promotes trapped pockets of free product); hydrogeologic regime (e.g., permeability, depth to water table, ground water flow direction, and gradient); and anticipated product recharge rate.

TOP

## Performance Data:

Once contaminants are detected, the immediate response should include both removal of the source and recovery of product by the most expedient means. Dual Phase Extraction methods will extract contaminated water with the product. It may be necessary to separate water and product prior to disposal or recycling of the product. As a result of the removal of substantial quantities of water during dual pumping operations, on-site water treatment will normally be required. When treatment of recovered water is required, permits will usually be necessary.

TOP

## Cost:

Because of the number of variances involved, establishing general costs for dual phase extraction is difficult. Some representative costs are $500 per month for a single phase extraction (hand bailing) system; $1,200 to $2,000 per month for a single phase extraction (skimming) system; and $2,500 to $4,000 per month for a dual pumping system. These costs illustrate the relative magnitudes of the various recovery options available, which are typically less than other types of remediation.


ED_006532_00011133-00163

Key cost factors for the recovery of free product include waste disposal, potential for sale of recovered product for recycling, on-site equipment rental (e.g., pumps, tanks, treatment systems), installation of permanent equipment, and engineering and testing costs.

Estimated cost ranges per site are between $85,000 to $500,000 per site.

TOP

## References:

Treatment Technologies for Site Cleanup: Annual Status Report (ASR), Tenth Edition, EPA 542-R-01-004

Innovative Remediation Technologies: Field Scale Demonstration Project in North America, 2nd Edition

Abstracts of Remediation Case Studies, Volume 4, June, 2000, EPA 542-R-00-006

Guide to Documenting and Managing Cost and Performance Information for Remediation Projects - Revised Version, October, 1998, EPA 542-B-98-007

American Petroleum Institute, 1989. *A Guide to the Assessment and Remediation of Underground Petroleum Releases*, Publication 1628, API, Washington, DC, 81 pp.

MTBE Treatment Case Studies presented by the USEPA Office of Underground Storage Tanks.

DOE, 1994. *Technology Application Analysis: Petroleum Product Recovery and Contaminated Groundwater Remediation Amoco Petroleum Pipeline Constantine, MI,* prepared by Stone & Webster Environmental Technology & Services.

DOE, 1994. *Technology Application Analysis: Recovery of Free Petroleum ProductFort Drum, Fuel Dispensing Area 1595 Watertown, New York,* prepared by Stone & Webster Environmental Technology & Services.

EPA, 1988. *Cleanup of Releases from Petroleum USTs: Selected Technologies,* Washington, DC, EPA/530/UST-88/001.

EPA, 1997. *Analysis of Selected Enhancements for Soil Vapor Extraction*, EPA OSWER, EPA/542/R-97/007.

FRTR, 1998. *Remediation Case Studies: Six Phase Soil Heating at the U.S. Department of Energy's Savannah River Site, M Area, Aiken, South Carolina; and Hanford Site, 300-Area, Richland, Washington.*

Kram, M.L., 1990. "Measurement of Floating Petroleum Product Thickness and Determination of Hydrostatic Head in Monitoring Wells", NEESA Energy and Environmental News Information Bulletin No. 1B-107.

Kram, M.L., 1993. "Free Product Recovery: Mobility Limitations and Improved Approaches", NFESC Information Bulletin No. IB-123.

NEESA, 1992. *Immediate Response to Free Product Discovery*, NEESA Document No. 20.2-051.4.

TOP

## Site Information:

- Amoco Petroleum Pipeline Constantine, MI
- Fort Drum, Watertown, NY
- March Air Force Base, CA
- Lockheed Aeronautical Systems Co., Burbank, CA
- Major Car Rental Agency, Los Angeles, CA
- Navy Fuel Farm
- Privately Owned Gasoline Station Near Urban Drinking Water Source
- **Additional site information on the FRTR web site**

## Points of Contact:

TOP

General FRTR Agency Contacts

## Technology Specific Web Sites:

Government Web Sites

Non Government Web Sites

## Vendor Information:

TOP

A list of vendors offering In Situ Physical/Chemical Water Treatment is available from EPA REACH IT which combines information from three established EPA databases, the Vendor Information System for Innovative Treatment Technologies (VISITT), the Vendor Field Analytical and Characterization Technologies System (Vendor FACTS), and the Innovative Treatment Technologies (ITT), to give users access to comprehensive information about treatment and characterization technologies and their applications.

Government Disclaimer

## Health and Safety:

TOP

Hazard Analysis

TOP



ED_006532_00011133-00165

Technology>> Ground Water, Surface Water, and Leachate

>>3.9 In Situ Biological Treatment

>>4.29 Enhanced Bioremediation

Introduction>> The rate of bioremediation of organic contaminants by microbes is en by increasing the concentration of electron acceptors and nutrients in water, surface water, and leachate. Oxygen is the main electron acce aerobic bioremediation. Nitrate serves as an alternative electron acce under anoxic conditions.

## Description:

Figure 4-29a:
Typical Oxygen-Enhanced Bioremediation System for Contaminated Ground water with Air Sparging

Figure 4-29b:
Oxygen-Enhanced $H_2O_2$ Bioremediation System

Figure 4-29c:
Typical Nitrate-Enhanced Bioremediation System

Bioremediation is a process in which indigenous or inoculated micro-organisms (i.e., fungi, bacteria, and other microbes) degrade (metabolize) organic contaminants found in soil and/or ground water.

Bioremediation is a process that attempts to accelerate the natural biodegradation process by providing nutrients, electron acceptors, and competent degrading microorganisms that may otherwise be limiting the rapid conversion of contamination organics to innocuous end products.

Oxygen enhancement can be achieved by either sparging air below the water table or circulating hydrogen peroxide ($H_2O_2$) throughout the contaminated ground water zone. Under anaerobic conditions, nitrate is circulated throughout the ground water contamination zone to enhance bioremediation. Additionally, solid-phase peroxide products (e.g., oxygen releasing compound (ORC)) can also be used for oxygen enhancement and to increase the rate of biodegradation.

➢ *Oxygen Enhancement with Air Sparging*

Air sparging below the water table increases ground water oxygen concentration and enhances the rate of biological degradation of organic contaminants by naturally occurring microbes. (VOC stripping enhanced by air sparging is addressed in Technology Profile 4.34). Air sparging also increases mixing in the saturated zone, which increases the contact between ground water and soil. The ease and low cost of installing small-diameter

air injection points allows considerable flexibility in the design and construction of a remediation system. Oxygen enhancement with air sparging is typically used in conjunction with SVE or bioventing to enhance removal of the volatile component under consideration.

*Oxygen Enhancement with Hydrogen Peroxide*

During hydrogen peroxide enhancement, a dilute solution of hydrogen peroxide is circulated through the contaminated ground water zone to increase the oxygen content of ground water and enhance the rate of aerobic biodegradation of organic contaminants by naturally occurring microbes.

*Nitrate Enhancement*

Solubilized nitrate is circulated throughout ground water contamination zones to provide an alternative electron acceptor for biological activity and enhance the rate of degradation of organic contaminants. Development of nitrate enhancement is still at the pilot scale. This technology enhances the anaerobic biodegradation through the addition of nitrate.

Fuel has been shown to degrade rapidly under aerobic conditions, but success often is limited by the inability to provide sufficient oxygen to the contaminated zones as a result of the low water solubility of oxygen and because oxygen is rapidly consumed by aerobic microbes. Nitrate also can serve as an electron acceptor and is more soluble in water than oxygen. The addition of nitrate to an aquifer results in the anaerobic biodegradation of toluene, ethylbenzene, and xylenes. The benzene component of fuel has been found to biodegrade slower under strictly anaerobic conditions. A mixed oxygen/nitrate system would prove advantageous in that the addition of nitrate would supplement the demand for oxygen rather than replace it, allowing for benzene to be biodegraded under microaerophilic conditions.

These technologies may be classified as long-term technologies, which may take several years for plume clean-up.

TOP

## Synonyms:

Biostimulation, bioaugmentation.
DSERTS Codes:

F11 (Bioremediation - In Situ Groundwater)
H1 (Bioremediation)
H12 (Bioremediation - In Situ)

TOP

## Applicability:

Target contaminants for enhanced biodegradation processes are nonhalogenated VOCs, nonhalogenated SVOCs, and fuels. Pesticides also should have limited treatability. Nitrate enhancement has primarily been used to remediate ground water contaminated by BTEX.

TOP

## Limitations:

Factors that may limit the applicability and effectiveness of these processes include:

- Where the subsurface is heterogeneous, it is very difficult to deliver the nitrate or hydrogen peroxide solution throughout every portion of the contaminated zone. Higher permeability zones will be cleaned up much faster because ground water flow rates are greater.
- Safety precautions must be used when handling hydrogen peroxide.
- Concentrations of hydrogen peroxide greater than 100 to 200 ppm in ground water are inhibiting to microorganisms.
- Microbial enzymes and high iron content of subsurface materials can rapidly reduce concentrations of hydrogen peroxide and reduce zones of influence.
- A ground water circulation system must be created so that contaminants do not escape from zones of active biodegradation.
- Because air sparging increases pressure in the vadose zone, vapors can build up in building basements, which are generally low pressure areas.
- Many states prohibit nitrate injection into ground water because nitrate is regulated through drinking water standards.
- A surface treatment system, such as air stripping or carbon adsorption, may be required to treat extracted ground water prior to re-injection or disposal.

TOP

## Data Needs:

A detailed discussion of these data elements is provided in Subsection 2.2.2 (Data Requirements for Ground Water, Surface Water, and Leachate).

Characteristics that should be investigated prior to system design include aquifer permeability, site hydrology, dissolved oxygen content, pH, and depth, type, concentration, redox conditions, temperature, biodegradability of contaminants, and the presence of a competent biodegrading population of microorganisms.

TOP

## Performance Data:

As with other in situ biodegradation processes, the success of this technology is highly dependent upon soil properties and biodegradability of the contaminants.

Although oxygen enhancement with air sparging is relatively new, the related technology, bioventing (Treatment Technology Profile 4.1), is rapidly receiving increased attention from remediation consultants. This technology employs the same concepts as bioventing, except that air is injected below the water table to promote the remediation of ground water.

TOP

## Cost:

For oxygen enhancement with air sparging, typical costs are $10 to $20 per 1,000 liters ($40 to $80 per 1,000 gallons) of ground water treated. Variables affecting the cost are the nature and depth of the contaminants, use of bioaugmentation and/or hydrogen peroxide or nitrate addition, and ground water pumping rates.

For nitrate enhanced treatment, one cost estimate is in the range of $40 to $60 per liter ($160 to $230 per gallon) of residual fuel removed from the aquifer.

For hydrogein peroxide enhanced treatment, costs are an order of magnitude more expensive than other methods of oxygen enhancement. O&M cost of hydrogen peroxide

enhancement can be significant because a continuous source of hydrogen peroxide must be delivered to the contaminated ground water.

TOP

## References:

Treatment Technologies for Site Cleanup: Annual Status Report (ASR), Tenth Edition, EPA 542-R-01-004

Innovative Remediation Technologies: Field Scale Demonstration Project in North America, 2nd Edition

Remediation Technology Cost Compendium - Year 2000

Groundwater Cleanup: Overview of Operating Experience at 28 Sites, September 1999, EPA 542-R-99-006,

Treatment Experiences at RCRA Corrective Actions, December 2000, EPA 542-F-00-020

Abstracts of Remediation Case Studies, Volume 4, June, 2000, EPA 542-R-00-006

Guide to Documenting and Managing Cost and Performance Information for Remediation Projects - Revised Version, October, 1998, EPA 542-B-98-007

MTBE Treatment Case Studies presented by the USEPA Office of Underground Storage Tanks.

Emerging Technologies for Enhanced In Situ Biodenitrification (EISBD) of Nitrate Contaminated Ground Water, The Interstate Technology and Regulatory Cooperation Work Group (ITRC) In Situ Biodenitrification Work Team, April 2000

The EPA's Treatment Technologies for Site Cleanup Annual Status Report, Tenth Edition, documents the status, as of the summer of 2000, of treatment technology applications for soil, other solid wastes, and groundwater at Superfund sites.

Technology Evaluation Report: Technologies for Dense Nonaqueous Phase Liquid Source Zone Remediation, Ground-Water Remediation Technologies Analysis Center (GWRTAC), December 1998.

Acree, S.D. et al. 1997. "Site Characterization Methods of the Design of In Situ Donor Delivery Systems," *In Situ and On Site Bioremediation: Volume 4*. B.C. Alleman and A. Leeson. Battelle Press, Columbus, OH.

Dey, C.D., R.A. Brown, and W.E. McFarland, 1991. "Integrated Site Remediation Combining Groundwater Treatment, Soil Vapor Recovery, and Bioremediation," *Hazardous Materials Control*, Vol. 4, No. 2, pp. 32-39, March/April 1991.

EPA, 1992. *In Situ Bioremediation of Contaminated Ground Water*, EPA/540/S-92/003; NTIS: PB92-224336.

EPA, 1997. *Anaerobic Biodegredation of BTEX in Aquifer Material*, EPA/600/S-97/003.

EPA, 1997. *Bioremediation of BTEX, Naphthalene, and Phenanthrene in Aguifer Material Using Mixed Oxygen/Nitrate Electron Acceptor Conditions*, EPA/600/SR-97/103.

Federal Remediation Technologies Roundtable, 1997. *Remediation Case Studies: Soil*



ED_006532_00011133-00169

*Vapor Extraction and Other In Situ Technologies*, EPA/542/R-97/009.

- In Situ Enhanced Soil Mixing at the U.S. Department of Energy's Portsmouth Gaseous Diffusion Plant, X-231B Unit, Piketon, Ohio

Federal Remediation Technologies Roundtable, 1998. *Remediation Case Studies: Innovative Groundwater Treatment Technologies*, EPA/542/R-98/015.

- Enhanced Bioremediation of Contaminated Groundwater - Balfour Road Site, Brentwood, CA; Fourth Plain Service Station Site, Vancouver, WA; Steve's Standard and Golden Belt 66 Site, Great Bend, KS
- In Situ Anaerobic Bioremediation at DOE's Pinellas Northeast Site, Largo, Florida
- Pump and Treat and In Situ Bioremediation of Contaminated Groundwater at the French Ltd. Superfund Site, Crosby, Texas
- Pump and Treat and In Situ Bioremediation of Contaminated Groundwater at the Libby Groundwater Superfund Site, Libby, Montana
- Pump and Treat, In Situ Bioremediation, and In Situ Air Sparging of Contaminated Groundwater at Site A, Long Island, New York

Hutchins, S.R., G.W. Sewell, D.A. Kovacs, and G.A. Smith, 1991. "Biodegradation of Aromatic Hydrocarbons by Aquifer Microorganisms Under Denitrifying Conditions," *Environmental Science and Technology*, No. 25, pp. 68-76.

*Technology Catalogue*, Second Edition, April 1995

*Treatment Technologies Applications Matrix for Base Closure Activities*, November 1994

U.S. Department of Commerce, National Technical Information Service(NTIS), May 1991. "Nitrate for Biorestoration of an Aquifer Contaminated with Jet Fuel".

TOP

## Site Information:

- Watertown, MA
- Bendena Site, KS
- UST site 23, Naval Air Station Point Mugu, CA
- Natural Gas Pipeline Compressor Station, VA
- Unidentified Site, Lansing, MI
- Formerly JimBo's Gas N'Goodies, Aiken, SC
- Dry Cleaning Facility
- Columbia County Landfill, GA
- Denver Federal Center, CO
- Hanford 200 Area
- ORNL, Oak Ridge, TN
- Edwards AFB, CA
- Naval Communication Station, Scotland
- DOE Demo Savannah River Site, SC
- EPA Demo Williams AFB, AZ
- DOE Savannah River Site, SC
- DOE Demo Hanford Site, WA
- NAS Fallon, NV
- Air Force & DOE Demo Tinker AFB, OK
- Air Force Demo Eglin, AFB, FL
- Air Force Demo Kelly AFB, TX & Eglin AFB, FL
- DOI Demo Picatinny Arsenal, NJ
- DOI Demo Defense Fuel Supply Point, SC

- DOE Tech Demo (USGS) Galloway Township, NJ
- Stalworth Timber Beatrice, AL
- Park City, KS
- Mayville Fire Department Mayville, MI
- Dover AFB, Dover, DE
- Knispel Construction Site, Horseheads, NJ
- Orkin Facility, Fort Pierce, FL
- Farfield Coal & Gas, Farfield, IA
- DOE K-25 Site
- Libby Ground Water Superfund Site
- Public Service Company of Colorado, CO
- Kennedy Space Center, FL
- DOE's Portsmouth Gaseous Diffusion Plant, X-231B Unit, Piketon, OH
- Balfour Road Site, Brentwood, CA; Fourth Plain Service Station Site, Vancouver, WA; Steve's Standard and Golden Belt 66 Site, Great Bend, KS
- DOE's Pinellas Northeast Site, Largo, FL
- French Ltd. Superfund Site, Crosby, TX
- Site A, Long Island, NY
- **Additional site information on the FRTR web site**

## Points of Contact:

TOP

General FRTR Agency Contacts

## Technology Specific Web Sites:

Government Web Sites

Non Government Web Sites

## Vendor Information:

TOP

A list of vendors offering In Situ Biological Water Treatment is available from EPA REACH IT which combines information from three established EPA databases, the Vendor Information System for Innovative Treatment Technologies (VISITT), the Vendor Field Analytical and Characterization Technologies System (Vendor FACTS), and the Innovative Treatment Technologies (ITT), to give users access to comprehensive information about treatment and characterization technologies and their applications.

Government Disclaimer

## Health and Safety:

TOP

Hazard Analysis

TOP

# Table 3-2: Treatment Technologies Screening Matrix

Rating Codes:
- ● Above Average
- ◑ Average
- ○ Below Average
- N/A "Not Applicable"
- I/D "Insufficient Data"
- ◇ Level of Effectiveness highly dependent upon specific contaminant and its application

| | Development Status | Treatment Train | Relative Overall Cost & Performance: O&M | Capital | System Reliability & Maintainability | Relative Costs | Time | Availability | Nonhalogenated VOC's | Halogenated VOC's | Nonhalogenated SVOC's | Halogenated SVOC's | Fuels | Inorganics | Radionuclides | Explosives |
|---|---|---|---|---|---|---|---|---|---|---|---|---|---|---|---|---|
| **Soil, Sediment, Bedrock, and Sludge** | | | | | | | | | | | | | | | | |
| **3.1 In Situ Biological Treatment** | | | | | | | | | | | | | | | | |
| 4.1 Bioventing | ● | ● | ● | ● | ● | ● | ◑ | ● | ● | ◇ | ● | ○ | ● | ○ | ◇ | ○ |
| 4.2 Enhanced Bioremediation | ● | ● | ○ | ◑ | ◑ | ● | ◑ | ● | ● | ● | ● | ◇ | ● | ◇ | ◇ | ● |
| 4.3 Phytoremediation | ● | ● | ● | ● | ○ | ● | ○ | ◑ | ◑ | ◑ | ◑ | ◇ | ◑ | ◑ | ○ | ○ |
| **3.2 In Situ Physical/Chemical Treatment** | | | | | | | | | | | | | | | | |
| 4.4 Chemical Oxidation | ● | ● | ○ | ◑ | ◑ | ◑ | ● | ● | ◑ | ◑ | ○ | ◑ | ○ | ◇ | ○ | ◑ |
| 4.5 Electrokinetic Separation | ● | ○ | ○ | ◑ | ◑ | ○ | ◑ | ◑ | ◑ | ◑ | ◑ | ◑ | ○ | ● | ◑ | ○ |
| 4.6 Fracturing | ● | ◑ | ◑ | ○ | ◑ | ◑ | ◑ | ● | ◑ | ◑ | ◑ | ◑ | ◑ | ○ | ○ | ○ |
| 4.7 Soil Flushing | ● | ● | ○ | ◑ | ◑ | ◑ | ◑ | ● | ● | ● | ◑ | ◑ | ◑ | ● | ○ | ○ |
| 4.8 Soil Vapor Extraction | ● | ○ | ○ | ◑ | ● | ● | ◑ | ● | ● | ● | ○ | ○ | ● | ○ | ○ | ○ |
| 4.9 Solidification/Stabilization | ● | ● | ◑ | ○ | ● | ● | ● | ● | ○ | ○ | ◑ | ◑ | ○ | ● | ● | ○ |
| **3.3 In Situ Thermal Treatment** | | | | | | | | | | | | | | | | |
| 4.10 Thermal Treatment | ● | ○ | ○ | ○ | ● | ◑ | ● | ● | ● | ● | ● | ● | ● | ○ | ○ | ○ |
| **3.4 Ex Situ Biological Treatment (assuming excavation)** | | | | | | | | | | | | | | | | |
| 4.11 Biopiles | ● | ● | ● | ● | ● | ● | ◑ | ● | ● | ● | ◑ | ◇ | ● | ◇ | ○ | ○ |
| 4.12 Composting | ● | ● | ● | ● | ● | ● | ◑ | ● | ◑ | ◑ | ◑ | ◇ | ● | ○ | ○ | ● |
| 4.13 Landfarming | ● | ● | ● | ● | ● | ● | ◑ | ● | ◑ | ◑ | ● | ◑ | ● | ○ | ○ | ◇ |
| 4.14 Slurry Phase Biological Treatment | ● | ○ | ○ | ○ | ◑ | ◑ | ◑ | ● | ◑ | ● | ● | ◇ | ● | ◇ | ○ | ● |
| **3.5 Ex Situ Physical/Chemical Treatment (assuming excavation)** | | | | | | | | | | | | | | | | |
| 4.15 Chemical Extraction | ● | ○ | ○ | ○ | ◑ | ◑ | ◑ | ● | ◑ | ◑ | ● | ● | ◑ | ● | ◑ | ○ |
| 4.16 Chemical Reduction /Oxidation | ● | ◑ | ◑ | ○ | ● | ◑ | ● | ● | ◑ | ◑ | ◑ | ◑ | ◑ | ● | ○ | ◑ |
| 4.17 Dehalogenation | ● | ◑ | ○ | ○ | ○ | ○ | ◑ | ◑ | ○ | ● | ○ | ● | ○ | ○ | ○ | ◑ |
| 4.18 Separation | ● | ◑ | ○ | ◑ | ● | ◑ | ● | ● | ◑ | ◑ | ◑ | ◑ | ○ | ◑ | ○ | ○ |
| 4.19 Soil Washing | ● | ○ | ○ | ○ | ● | ◑ | ● | ● | ◑ | ◑ | ◑ | ◑ | ◑ | ◑ | ○ | ○ |
| 4.20 Solidification/Stabilization | ● | ● | ◑ | ○ | ● | ● | ● | ● | ○ | ○ | ◑ | ◑ | ○ | ● | ● | ○ |
| **3.6 Ex Situ Thermal Treatment (assuming excavation)** | | | | | | | | | | | | | | | | |
| 4.21 Hot Gas Decontamination | ○ | ● | ○ | ○ | ● | ● | ● | ◑ | ○ | ○ | ○ | ○ | ○ | ○ | ○ | ○ |
| 4.22 Incineration | ● | ● | ○ | ○ | ◑ | ○ | ● | ● | ● | ● | ● | ● | ● | ○ | ○ | ● |
| 4.23 Open Burn/Open Detonation | ● | ● | ○ | ○ | ● | ● | ● | ● | ○ | ○ | ○ | ○ | ○ | ○ | ○ | ● |
| 4.24 Pyrolysis | ● | ● | ○ | ○ | ○ | ○ | ● | ● | ◑ | ◑ | ● | ● | ◑ | ○ | ○ | ○ |
| 4.25 Thermal Desorption | ● | ● | ○ | ○ | ◑ | ◑ | ● | ● | ● | ● | ● | ● | ● | ○ | ○ | ● |
| **3.7 Containment** | | | | | | | | | | | | | | | | |
| 4.26 Landfill Cap | ● | ● | ◑ | ○ | ● | ● | ○ | ● | ◑ | ◑ | ◑ | ◑ | ◑ | ◑ | ○ | ◑ |
| 4.27 Landfill Cap Enhancements/Alternatives | ● | ● | ◑ | ○ | ● | ● | ○ | ● | ◑ | ◑ | ◑ | ◑ | ◑ | ◑ | ○ | ◑ |
| **3.8 Other Treatment** | | | | | | | | | | | | | | | | |
| 4.28 Excavation, Removal, Off-Site Disposal | ● | ● | ● | ● | ● | ◇ | ● | ● | ◑ | ◑ | ◑ | ◑ | ◑ | ◑ | ○ | ◑ |
| **Ground Water, Surface Water, and Leachate** | | | | | | | | | | | | | | | | |
| **3.9 In Situ Biological Treatment** | | | | | | | | | | | | | | | | |
| 4.29 Enhanced Bioremediation | ● | ● | ○ | ◑ | ◑ | ● | ◇ | ● | ● | ◇ | ● | ◇ | ● | ◇ | ○ | ◑ |
| 4.30 Monitored Natural Attenuation | ● | ● | ○ | ◑ | ◑ | ● | ◇ | ● | ● | ◑ | ◑ | ◑ | ● | ○ | ○ | ○ |
| 4.31 Phytoremediation | ● | ● | ● | ● | ○ | ● | ○ | ◑ | ◑ | ◑ | ◑ | ◑ | ◑ | ◇ | ○ | ○ |
| **3.10 In Situ Physical/Chemical Treatment** | | | | | | | | | | | | | | | | |
| 4.32 Air Sparging | ● | ● | ● | ● | ● | ● | ● | ● | ● | ◑ | ◑ | ◑ | ● | ○ | ○ | ○ |
| 4.33 Bioslurping | ● | ◑ | ● | ● | ◑ | ● | ◑ | ● | ◑ | ◑ | ● | ● | ● | ◑ | ○ | ○ |
| 4.34 Chemical Oxidation | ● | ● | ○ | ◑ | ◑ | ◑ | ● | ● | ◑ | ◑ | ○ | ◑ | ○ | ◇ | ○ | ◑ |
| 4.35 Directional Wells (enhancement) | ● | ● | ◑ | ○ | ◑ | ◑ | ◑ | ● | ◑ | ◑ | ◑ | ◑ | ◑ | ◑ | ○ | ◑ |
| 4.36 Dual Phase Extraction | ● | ○ | ○ | ○ | ◑ | ◑ | ◑ | ● | ● | ● | ● | ● | ● | ○ | ○ | ○ |
| 4.37 Thermal Treatment | ● | ○ | ○ | ○ | ◑ | ◑ | ● | ● | ◑ | ● | ● | ● | ● | ○ | ○ | ○ |
| 4.38 Hydrofracturing Enhancements | ● | ◑ | ● | ● | ● | ◑ | ◑ | ● | ◑ | ◑ | ◑ | ◑ | ◑ | ◑ | ○ | ◑ |
| 4.39 In Well Air Stripping | ● | ◑ | ◑ | ○ | ◑ | ◑ | ○ | ● | ◑ | ◑ | ◑ | ○ | ◑ | ○ | ○ | ○ |
| 4.40 Passive/Reactive Treatment Walls | ● | ● | ◑ | ○ | ● | ◑ | ○ | ● | ● | ● | ● | ● | ◑ | ◇ | ○ | ● |
| **3.11 Ex Situ Biological Treatment** | | | | | | | | | | | | | | | | |
| 4.41 Bioreactors | ● | ● | ◑ | ○ | ◑ | ● | ◑ | ● | ● | ● | ● | ◇ | ● | ○ | ○ | ● |
| 4.42 Constructed Wetlands | ● | ● | ◑ | ○ | ◇ | ◑ | ◇ | ○ | ◑ | ◑ | ◑ | ◇ | ◑ | ● | ○ | ● |
| **3.12 Ex Situ Physical/Chemical Treatment (assuming pumping)** | | | | | | | | | | | | | | | | |
| 4.43 Adsorption/ Absorption | ● | ● | ○ | ◑ | ◑ | ○ | ○ | ● | ◑ | ◑ | ◑ | ◑ | ○ | ● | ◇ | ○ |
| 4.44 Advanced Oxidation Processes | ● | ◑ | ○ | ○ | ◑ | ◑ | ○ | ● | ● | ● | ● | ● | ● | ◇ | ◇ | ● |
| 4.45 Air Stripping | ● | ◑ | ○ | ◑ | ● | ● | ○ | ● | ● | ● | ○ | ○ | ○ | ○ | ○ | ○ |
| 4.46 Granulated Activated Carbon/Liquid Phase Carbon Adsorption | ● | ◑ | ○ | ◑ | ● | ◑ | ○ | ● | ● | ● | ● | ● | ● | ◇ | ○ | ◇ |
| 4.47 Groundwater Pumping/Pump & Treat | ● | ◑ | ○ | ○ | ● | ○ | ○ | ● | ◑ | ◑ | ◑ | ◇ | ◑ | ◑ | ○ | ◑ |
| 4.48 Ion Exchange | ● | ◑ | ○ | ○ | ● | ◑ | ○ | ● | ○ | ○ | ○ | ○ | ○ | ● | ◑ | ○ |
| 4.49 Precipitation/Coagulation/Flocculation | ● | ◑ | ◑ | ○ | ● | ◑ | ○ | ● | ○ | ○ | ○ | ○ | ○ | ● | ◑ | ○ |
| 4.50 Separation | ● | ◑ | ○ | ○ | ● | ○ | ● | ● | ● | ● | ● | ● | ● | ◇ | ◇ | ○ |
| 4.51 Sprinkler Irrigation | ● | ● | ● | ● | ● | ○ | ○ | ● | ● | ● | ○ | ○ | ○ | ○ | ○ | ○ |
| **3.13 Containment** | | | | | | | | | | | | | | | | |
| 4.52 Physical Barriers | ● | ● | ◑ | ○ | ● | ● | ○ | ● | ● | ● | ● | ● | ● | ● | | ● |
| 4.53 Deep Well Injection | ● | ● | ● | ● | ◑ | ● | ○ | ● | ◑ | ◑ | ◑ | ◑ | ◑ | ◑ | ◑ | ◑ |
| **3.14 Air Emissions/Off-Gas Treatment** | | | | | | | | | | | | | | | | |
| 4.54 Biofiltration | ● | N/A | ● | ● | ◇ | ● | ● | ○ | ● | ◇ | ◇ | ◇ | ● | ○ | I/D | ◇ |
| 4.55 High Energy Destruction | ○ | N/A | I/D | I/D | ○ | ◑ | I/D | ◑ | ● | ● | ● | ● | ● | ◑ | I/D | ○ |
| 4.56 Membrane Separation | ○ | N/A | I/D | I/D | ○ | ◑ | I/D | ◑ | ● | ● | ◑ | ◑ | ◑ | ○ | I/D | ◑ |
| 4.57 Oxidation | ● | N/A | ● | ● | ● | ● | I/D | ● | ● | ● | ● | ● | ● | ○ | I/D | ◑ |
| 4.58 Scrubbers | ● | N/A | ◑ | ○ | ● | ● | I/D | ● | ○ | ○ | ○ | ○ | ○ | ● | I/D | I/D |
| 4.59 Vapor Phase Carbon Adsorption | ● | N/A | ● | ● | ● | ● | I/D | ● | ● | ● | ● | ● | ● | ◑ | I/D | ● |

# Table 3-1: Definition of Symbols Used in the Treatment Technologies Screening Matrix

| Factors | | ● Above Average | ◑ Average | ○ Below Average | Other |
|---|---|---|---|---|---|
| **Development Status** Scale status of an available technology | | Implemented as part of the final remedy at multiple sites, well documented, understood, etc. | Has been implemented at full scale but still needs improvements, testing, etc. | Not been fully implemented but has been tested (pilot, bench, lab scale) and is promising | ◇ Level of Effectiveness: highly dependent upon specific contaminant and its application/ design |
| **Treatment Train** Is the technology only effective as part of the treatment train? | | Stand-alone technology (not complex in terms of number of media/treatment technologies, maybe one "routine" technology in addition) | Relatively simple (two-car train or so), and well understood, widely applied, etc. | Complex (more technologies, media to be treated, generates excessive waste, etc.) | |
| Relative overall cost and performance | **O&M** Operation and Maintenance Intensive | Low degree of O&M intensity | Average degree of O&M intensity | High degree of O&M intensity | |
| | **Capital** Capital Intensive | Low degree of capital investment | Average degree of capital investment | High degree of capital investment | |
| | **System Reliability /Maintainability** The expected range of demonstrated reliability and maintenance relative to other effective technologies | High reliability and low maintenance | Average reliability and average maintenance | Low reliability and high maintenance | N/A "Not Applicable" |
| | **Relative Costs** Design, construction, and operations and maintenance (O&M) costs of the core process that defines each and pre-and post-treatment | Low degree of general costs relative to other options | Average degree of general costs relative to other options | High degree of general costs relative to other options | I/D "Insufficient Data" |
| | **Time** Time required to clean up a "standard" site using the technology — in situ soil | Less than 1 year | 1-3 years | More than 3 years for in situ soil | |
| | ex situ soil | Less than 0.5 year | 0.5-1 year | More than 1 year for ex situ soil | |
| | groundwater | Less than 3 years | 3-10 years | More than 10 years for water | |
| **Availability** Number of vendors that can design, construct, and maintain the technology | | More than 4 vendors | 2-4 vendors | Fewer than 2 vendors | |
| **Contaminants Treated** Contaminants are classified into eight groups: - Nonhalogenated VOCs - Halogenated VOCs - Nonhalogenated SVOCs - Halogenated SVOCs - Fuels - Inorganics - Radionuclides - Explosives | | Effectiveness Demonstrated at Pilot or Full Pilot or Full Scale | Limited Effectiveness Demonstrated at Pilot or Full Scale | No Demonstrated Effectiveness at Pilot or Full Scale | Same as above |

# Appendix F

# DOH HEER Environmental Hazard Evaluation

# Cross Reference Table

| Appendix F Summary of Substantive Changes to Comply with EHE Requirements as Specified in DOH-HEER Guidance | | |
|---|---|---|
| Page No. | Section | Change |
| ES-1 | Executive Summary | Added as Paragraph 2: "*This interim update fulfills the requirement to review and update the Groundwater Protection Plan every five years. This update also fulfills the DOH request of 12 February 2014 to modify the Groundwater Protection Plan to comply with the requirements of Environmental Hazard Evaluations as specified in the DOH HEER Guidance.*" |
| 1-1 | 1 | Added to Paragraph 2: "*This update to the plan is intended only to incorporate additional information obtained since completion of the previous plan and to meet current requirements for an environmental hazard evaluation (EHE). This interim update fulfills the requirement to review and update the Groundwater Protection Plan every five years. This update also fulfills the State of Hawaii Department of Health (DOH) request of 12 February 2014 to modify the Groundwater Protection Plan to comply with the requirements of EHEs as specified in the DOH HEER Guidance.*" |
| 1-1 | 1 | Added as Paragraph 3: "*Preparatory work is currently in progress to update the Numerical Groundwater Model and the Contaminant Transport Analysis that were utilized as the basis for this Groundwater Protection Plan. In addition to the tasks already conducted under the Groundwater Protection Plan, the update effort is anticipated to include construction of additional groundwater monitoring wells, surveying to establish the elevations of key points within the aquifer system, additional water level monitoring and pump tests to further refine the groundwater model, and additional sampling and laboratory analysis to provide data that will enhance development of parameters for the contaminant transport analysis*" |
| 1-5 | 1.7 | Added to Paragraph 1: "*Preparatory work is currently in progress to update the Numerical Groundwater Model and the Contaminant Transport Analysis that were utilized as the basis for the 2008 Groundwater Protection Plan. This section will be revised following the Numerical Groundwater Model and the Contaminant Transport Analysis updates, if necessary.*" |
| 2-3 | 2.2.2 | Revised end of Paragraph 1 to: "Methods and criteria for investigations and response actions conducted under the SCP are described in the *DOH Office of Hazard Evaluation and Emergency Response (HEER)* technical guidance manual (TGM) for the Implementation of the Hawaii State Contingency Plan (*DOH, 2009) hereafter referred to as the DOH-HEER TGM.* The *DOH-HEER* TGM *describes a three-stage process to* determine whether further action is necessary for a site:<br>*Site Investigation - determine the extent and magnitude of contamination;*<br>*Environmental Hazard Evaluation - determine the presence or absence of potential environmental hazards;*<br>*Response Action - determine appropriate actions to address the identified hazards.*<br>*The DOH-HEER TGM indicates that the DOH 'Tier 1 EALs may be used to identify contaminants above levels of potential concern. The investigation of contaminants below the EALs is generally not necessary.'*" |
| 2-4 | 2.2.3 | Revised end of Paragraph 1 to: "Regulations and requirements are explained |

| Appendix F Summary of Substantive Changes to Comply with EHE Requirements as Specified in DOH-HEER Guidance | | |
|---|---|---|
| Page No. | Section | Change |
| | | in detail in the *Technical Guidance Manual for Underground Storage Tank Closure and Release Response,* (DOH, 2000), hereafter referred to as the DOH-UST TGM*, and the Evaluation of Environmental Hazards at Sites with Contaminated Soil and Groundwater (DOH, 2011 revised January 2012), hereafter referred to as the DOH-HEER EHE guidance."* |
| 2-4 | 2.2.3 | Added as Paragraph 2: "*A cross reference table for the requirements of EHEs as specified in the DOH-HEER EHE Guidance is provided in Appendix F."* |
| 2-4 | 2.2.4 | Deleted this section, "EALs as 'To be Considered' Guidance" |
| 2-5 | Table 2-1 | Deleted Reporting Requirements for UST Release Response |

| Appendix F: DOH HEER TGM Section 13 EHE Cross Reference Table | | | |
|---|---|---|---|
| **DOH Hawai'i HEER TGM Section** | | **Red Hill Bulk Storage Facility Groundwater Protection Plan** | |
| 13.1 | Target Environmental Hazards | 1.2 | Description of the Problem |
| 13.2 | Tier 1 Environmental Action Levels | 4.2<br>4.3 | Groundwater Analytical Results<br>Groundwater Action Levels |
| 13.2.1 | Default Conceptual Site Models | 1.7 | Conceptual Site Model and Risk |
| 13.2.2 | Compilation of Environmental Action Levels | 4.1.3<br>Table 4-1 | Groundwater Sampling and Analysis Protocol<br>Action Levels |
| 13.2.3 | Use of the EAL Surfer | Table 4-1 | Action Levels |
| 13.2.4 | Use of EALs in Site Investigations | 4.1.3<br>Table 4-1 | Groundwater Sampling and Analysis Protocol<br>Action Levels |
| 13.2.5 | Use of EALs in Environmental Hazard Evaluations | 4.1.3<br>Table 4-1<br>Table 4-2 | Groundwater Sampling and Analysis Protocol<br>Action Levels<br>Responses to Groundwater Monitoring Results |
| 13.2.6 | Use of EALs in Response Actions | Table 4-2 | Responses to Groundwater Monitoring Results |
| 13.3 | Steps to Environmental Hazard Evaluation | 1.1<br>1.2<br>1.3 | Description of the Facility<br>Description of the Problem<br>Groundwater Protection Plan Scope and Objectives |
| 13.3.1 | Identify Key COPCs | 4.1.1<br>4.1.3 | Regulatory Requirements<br>Groundwater Sampling and Analysis Protocol |
| 13.3.2 | Determine Representative Contaminant Concentrations | 1.7.2<br>1.7.2.1<br>1.7.2.2<br>1.7.2.3 | Nature and Extent of Contamination<br>Rock boring Sample Results<br>Groundwater Sample Results<br>Soil Vapor Sample Results |
| 13.3.3 | Identify Potential Environmental Hazards | 1.7.3.1<br>1.7.3.2 | Groundwater Usage<br>Contaminant Fate and Transport and Groundwater Modeling |
| 13.3.4 | Advanced Evaluation of Environmental Hazards | 4.1<br>4.2<br>4.3 | Groundwater Monitoring Program<br>Groundwater Analytical Results<br>Groundwater Action Levels |
| 13.3.5 | Complete the Site Investigation | 1.7.2<br>4.1<br>Follow-up site investigation work continues | Nature and Extent of Contamination<br>Groundwater Monitoring Program |
| 13.3.6 | Prepare Environmental Hazard Maps | Maps of environmental hazards, where determined, are included in the corresponding incident-specific reports. | |



ED_006532_00011133-00178

| Appendix F: DOH HEER TGM Section 13 EHE Cross Reference Table | |
|---|---|
| **DOH Hawai'i HEER TGM Section** | **Red Hill Bulk Storage Facility Groundwater Protection Plan** |
| 13.3.7 Recommended Follow-up Actions | 1. Introduction<br>3.3 Ongoing Groundwater Protection Activities<br>4.1 Groundwater Monitoring Program<br>4.2 Groundwater Analytical Results<br>4.3 Groundwater Action Levels |
| 13.4 Preparation of Environmental Hazard Evaluation Reports | Groundwater Protection Plan<br>Red Hill Bulk Fuel Storage Facility Final Technical Report TEC, Inc. August 2007 |
| 13.5 Human Health Risk Assessments | A human health risk assessment was performed in 2007 and summarized in the August 2007 Red Hill Bulk Fuel Storage Facility Final Technical Report. A re-evaluation of the Tier 3 risk assessment was conducted in 2010 and summarized in the May 4, 2010 Type 1 Letter Report. |
| 13.5.1 Components of Human Health Risk Assessment | Not applicable |
| 13.5.1.1 Data Usability Evaluation/Selection of COPCs | Not applicable |
| 13.5.1.2 Exposure Assessment | Not applicable |
| 13.5.1.3 Toxicity Assessment | Not applicable |
| 13.5.1.4 Risk Characterization | Not applicable |
| 13.5.2 Representative Contaminant Concentrations | Not applicable |
| 13.5.2.1 Multi-increment Sampling Strategy | Not applicable |
| 13.5.2.2 Discrete Sampling Strategy | Not applicable |
| 13.5.3 Lead Risk Assessments | Not applicable |
| 13.5.4 Target Risks for Parklands | Not applicable |
| 13.5.5 References for HHRAs | Not applicable |
| 13.6 Ecological Risk Assessments | 1.7.3.3 Risk Summary |



ED_006532_00011133-00179