UNITED STATED DISTRICT COURT
SOUTHERN DISTRICT OF NEW YORK
---------- x

CANNISTRA REALTY, LLC,

Plaintiff,

-against-

UNITED STATES ENVIRONMENTAL PROTECTION AGENCY, ANDREW WHEELER, in his official capacity as Administrator of the United States Environmental Protection Agency, and ANGELA CARPENTER, in her official capacity as Acting Director of the Emergency and Remedial Response Division of the United States Environmental Protection Agency, Region 2,

Defendants.

---------- x

Civil Action No.

AFFIDAVIT

STATE OF NEW YORK)
) ss.:
COUNTY OF WESTCHESTER)

VICTOR CANNISTRA, C.P.A., being duly sworn, deposes and says:

1. I am a principal member of Plaintiff Cannistra Realty, LLC ("Cannistra") which owns the real property located at 115-125 Kisco Avenue, Mount Kisco, New York which is the subject of this litigation (the "Site" or the "Property").

2. I make and submit this Affidavit in support of Cannistra's Complaint and Order to Show Cause seeking a Preliminary Injunction to enjoin the United States Environmental Protection Agency ("EPA") from accessing the Site at unreasonable times and in further support of an Order seeking to vacate and strike EPA's issuance of an Administrative Order issued on March 12, 2019 which authorized unrestricted access, without any limitation as to day or hours of entry (the "Administrative Order"). Copies of

the Complaint and Administrative Order are annexed hereto as Exhibits "A" and "B," respectively.

3. I am fully familiar with the Site as my father and I purchased the Site in 1996 and worked there since 1988, for approximately twenty-five years, along with other employees of our accounting firm.

4. At no point in time when we purchased the Property in 1996 or until I was contacted by the EPA in May 2018, was I aware that our Property was adjacent to what I have come to learn is the Canadian Radium and Uranium Corporation Site (the "Canadian Radium Site") or that there were concerns from the EPA that contamination may have migrated onto our Property.

5. I am further concerned that it appears the EPA and other state and local agencies have known about the Canadian Radium Site and have been investigating it since the 1970's, but only brought this to our attention last year. I am further concerned that although investigative work was done by the EPA on other properties in connection with the Canadian Radium Site in 2016 and 2017, that we were not approached by EPA until two years after such work was performed.

6. I am also concerned that EPA now places some urgency on a matter that has not been the subject of urgency for decades and that EPA is making unreasonable demands to access our Property and interfere with our tenant's use of the Property, while rejecting our offer to allow EPA to access our Property at reasonable times so as not to interfere with the business being conducted on the Property and our offer to pay for EPA's additional costs to have the work performed during our tenant's non-working hours.

The Cannistra Realty, LLC Property

7. Cannistra Realty does not object to EPA having access to perform an investigation of our Property, which is our single most important investment. However, EPA's heavy handed tactics is to dictate that access must be granted on their unilateral terms as to days and times of access, with no consideration as to what is reasonable. Simply stated, EPA wants to perform its investigation during normal business operating hours when the Property is at its busiest and not after hours, when the Property is not being used.

8. As detailed in the Complaint, the Site was leased in August 2013 to the car manufacturer, Tesla. This location is the busiest sales center in the northeast for Tesla and the Site is occupied every day with cars, employees and customers.

9. The Site consists of a two story building and a parking lot. The building contains an office showroom and a 10,000 square foot service area. The parking lot is used for the parking of employee cars, customer cars being offered for sale, customer cars waiting for delivery after being purchased and prepared and customer cars that are waiting for service or have been serviced and are waiting to be picked up by the vehicle owner.

10. I have attached hereto as Exhibit "C," an aerial photograph of the Site showing the building occupied by Tesla as well as the parking lot. One will note that the paved area is occupied by in excess of 36 vehicles. This is a typical depiction of the use of the parking lot during normal business hours. The photograph shows the parking lot filled with cars except for areas reserved for vehicles to access in and out of the parking lot onto Kisco Avenue and to access the service bay. There are times where I have seen significantly

more cars parked on the lot than are depicted in the photograph. It is important to note that there is significantly more open space on the Site after Tesla is closed.

11. The Tesla showroom is open Monday through Friday from 10:00 a.m. to 7:00 p.m., Saturday from 10:00 a.m. to 6:00 p.m. and Sunday from 11:00 a.m. to 6:00 p.m. The Tesla service hours are Monday to Friday from 8:00 a.m. to 6:00 p.m. and Saturday from 8:00 a.m. to 4:00 p.m.

12. The Tesla dealership is a very intense use and employs approximately twenty-five employees. My accounting office is located less than one-half mile away and I drive by the Tesla Site often at various times of the day. It is always busy with employees and customers and occupied with cars parked on the lot. We have had instances where the Village of Mount Kisco has issued citations for employee cars illegally parking on the adjacent street, so employees are required to park on the Site.

13. I have also been present at the Site and observed employees and customers walking through the parking lot, delivery trucks traveling onto the Site and there being tight conditions on the Site due to its limited size. We are concerned that EPA's performing its investigation work during normal business hours is not only disruptive, but unsafe for customers and employees (and the workers doing the investigation).

14. I have discussed EPA's request to access the Property with the general manager of Tesla, who expressed his own concerns that the drilling of soil borings into the Tesla parking lot during business hours (and not after hours or overnight) would be disruptive, potentially damage expensive new cars and could be dangerous to its employees, customers and vendors.

EPA's Requested Access

15. Cannistra does not object to providing EPA access so it can perform its investigation or to the type and scope of the work to be performed. Cannistra objects to the reasonableness of the times that the Administrative Order grants EPA access to the Site. The Administrative Order provides EPA access with no limitation as to the days and hours of the work to be performed. The Administrative Order fails to set forth any restrictions on the time, but rather grants EPA unrestricted rights to have access to the Site. The Administrative Order clearly does not take into account the legitimate business concerns expressed and is certainly unreasonable as to the hours of access granted.

16. On June 15, 2018, EPA provided Cannistra with a Work Plan (attached hereto as Exhibit "B") to the Administrative Order (Exhibit "B"), outlining the work to be performed at the Site, which can be summarized as follows:

1) Placement of radon canisters that will be left on-site for seventy-two hours;

2) The performance of a radiological survey of the Site, which we understand will take three to four hours; and

3) The placement of approximately ten or more soil samples in various locations on the Site, including within the parking lot where cars are presently stored and the driving aisles where customers, vendors and employees drive, walk and park.

17. EPA anticipates that this work would take between four (4) and six (6) days to complete.

18. Cannistra has consistently stated it has no objection to the placement of the canisters and that can be performed at a mutually agreeable time. EPA has accepted as such.

19. EPA has stated the radiological survey must occur during normal business hours. Cannistra requested the radiological survey be performed after hours when more parking lot room can be made available and when EPA's contractor' will be in a better position to perform their work and not interfere with the tenant's customers and employees. Cannistra has suggested this work be performed on a Sunday before the showroom opens at 11:00 a.m. or in an evening during daylight savings time after the showroom closes at 6:00 p.m. Cannistra has also offered to pay for the expense of having lights on the Property as well as any overtime costs incurred by EPA. As this work will take less than four (4) hours, it can readily be performed outside of Tesla's business hours. EPA however has refused and continues to insist the radiological survey work must be performed during normal business hours.

20. Cannistra also objects to the drilling and placement of the soil borings during normal business hours as it will interfere with the tenant's use of the Property and requested such work should be performed off hours. EPA has refused this as well. It is expected the drilling work for approximately ten (10) sample points will take 3-4 days.

Cannistra's Efforts To Resolve The Dispute

21. Cannistra was first contacted when I received a telephone call from Daniel Gaughan, EPA's project manager of the Canadian Radium and Uranium site. Mr. Gaughan called me on May 10, 2018 advising that EPA was requesting access to the Cannistra property to perform an investigation to determine if contamination from the Canadian Radium site had migrated onto our Property. That afternoon Mr. Gaughan provided me

with a copy of reports prepared by EPA's contractors in 2016 and 2017, which I had not previously seen.

22. Thereafter, Cannistra retained Keane & Beane, P.C. as its counsel to advise as to EPA's access to its Property. Our counsel then engaged in a series of discussions with EPA's counsel to obtain more information about the scope of EPA's investigation and the hours the work would be performed. Attached hereto as Exhibit "D" is a series of email exchanges from June 2018 between Cannistra's counsel and EPA's counsel. In the June 7, 2018 11:20 a.m. email message from EPA counsel Margo Ludmer, Ms. Ludmer states "EPA may be able to perform some or all of the work during non-business hours, but that is dependent upon the dealership's hours of operation and EPA availability/payment of overtime compensation."

23. We were initially pleased that EPA appeared to understand our concerns and on June 12, 2018, our counsel provided Ms. Ludmer with Tesla's hours of operation and requested the contractor's work be scheduled when the Site was not active. (See Exhibit "D," page 2). On June 15, 2018, Ms. Ludmer provided our counsel with a draft of the work plan for the work to be performed by EPA at the Property and advised that while EPA can arrive before the dealership opens to place the radon canisters "however, the remaining work will need to be completed during the dealership's normal business hours." (See Exhibit "D," page 1).

24. Thereafter, Cannistra had a number of communications with its counsel as well as its counsel with EPA's counsel and by letter dated August 29, 2018, attached hereto as Exhibit "E", Cannistra Realty advised EPA of its concerns regarding EPA's work which

we were concerned would interfere with the current tenant's operation and be a great disturbance and potentially cause the tenant to cancel the lease. By email message dated August 30th and attached hereto as Exhibit "F", EPA's counsel advised many of the concerns set forth in our counsel's August 29th letter could not be satisfied including, of greatest concern, that EPA perform the work outside of the Tesla facility's hours of operation.

25. Thereafter our counsel continued to have communications with EPA in an effort to resolve the matter and a meeting was held at our company's office with EPA, its project manager, counsel and subcontractor. During the meeting we continued to confirm that Cannistra would provide access to EPA to perform the work EPA identified in its work plan. The primary issue of contention remained the hours of operation. Cannistra offered to pay for lights so the work could be performed during the evening, but we were advised by EPA they felt doing the work at night was not "safe," although it generally recognized that night time construction work routinely occurs. After that meeting, our counsel transmitted a letter on November 9, 2018 to EPA's counsel, attached hereto as Exhibit "G" reiterating our concerns.

26. By email dated December 4, 2018, (attached hereto as Exhibit "H") EPA's counsel advised EPA would not address any of the four points identified in our counsel's November 9, 2018 letter. EPA advised:

> Our stated position is that your client's preconditions to access are not reasonable. The will cause delay, result in additional costs, impose additional safety concerns for our workers. We are left with no alternative but to evaluate our enforcement options regarding access to your client's property.

27. We heard absolutely nothing from EPA for over three months. Approximately three months thereafter on March 12, 2019, we were served with the Administrative Order. Upon review of the Administrative Order I was shocked to find there was absolutely no discussion in the EPA's Findings of Fact of the concerns we expressed to EPA in the period from June 2018 to November 9, 2018. During those five months, there had been numerous emails, telephone calls, exchange of correspondence and a meeting where the principal concern expressed at all times was that the work be performed in a manner that minimized disturbance to our tenant's operations. The Findings of Fact had no discussion of the current use of the Property, not to mention the concerns that had been raised about the tenant's use of the Property and that the Property is fully occupied during normal business hours.

28. Most shocking was the fact that the Administrative Order granted EPA carte blanche access to our Property at any and all times of the day and all days of the week and there was no consideration by EPA to have the work performed at reasonable hours.

29. Thereafter, in a final effort to cooperate with EPA, Cannistra offered to pay for any additional costs associated with EPA performing the work off-hours. By email dated March 29, 2019, attached hereto as Exhibit "I", EPA indicated its willingness to perform work on either a Saturday or Sunday with Cannistra covering the additional costs associated with off hours work, but that work would extend into the weekday and "EPA continues to view nighttime work as an unacceptable condition for access."

30. In a further effort to resolve the matter, counsel transmitted a letter on April 1, 2019, attached hereto as Exhibit "J" setting forth a specific schedule that EPA could

perform the work, confirming again that Cannistra would pay for the additional costs incurred by EPA associated with the performing the work off hours. Specifically, Cannistra proposed the following schedule for the performance of the work:

> The tenant's location closes at 6:00 p.m. on Saturday and is open from 11:00 a.m. to 6:00 p.m. on Sunday. While we do not know your client's contractors mobilization needs and work schedule, we suggest the following and invite your comments:
>
> 1. The air canisters be placed in the building any time after 6:00 p.m. Saturday evening when the service, sales and customers have left the building and ready access can be provided.
>
> 2. The performance of the radiological survey can occur Saturday evening starting at 6:30 p.m. after the employees and customers have removed their cars from the parking lot.
>
> 3. Soil sampling can commence in the parking lot on Saturday evening and our clients are prepared to pay for lights to allow the work to continue into the evening. As the four samples proposed for the parking lot interfere the most with the tenant's activities, these four should occur on Saturday evening and if necessary, be completed Sunday morning.
>
> 4. The two samples to be taken in the street side of the building can be collected Sunday morning before 11:00 a.m. such that the parking of the drill rig and the work movements of the contractors will not interfere with the tenant's customers and employees.
>
> 5. The three samples to be collected along the southern side of the building and the one sample to be collected on the track side of the building can be collected Sunday afternoon and extend into Monday if necessary.

> We recognize this is an aggressive schedule, but suggest the performance of work during the evening hours on Saturday and all day Sunday (with the four samples in the parking lot to be collected as the first task for the drilling) should reasonably allow for this goal to be met.

31. EPA however refused to perform the work in accordance with Cannistra's request. A conference was held on April 4, 2019 at EPA's office pursuant to the Administrative Order which allows Cannistra to have an opportunity to confer with EPA before the Administrative Order takes effect. The conference lasted for approximately an hour and was held before the Regional Administrator's designee, Gerald Burke, Assistant Regional Counsel of the Office of Regional Counsel.

32. By letter dated April 11, 2019, attached hereto as Exhibit "K", Mr. Burke advised that "after the conference, I conferred with Angela Carpenter, the Acting Director of Emergency Remedial Response Division, on the issues raised by respondent. Ms. Carpenter has determined that no modifications to the Order are necessary or appropriate at this time." In response to Cannistra's argument that the times of access proposed were not reasonable as required by CERCLA, Mr. Burke wrote

> "in addition, respondent claims the Order is deficient because it does not take into account the property is a car dealership and therefore, it is unreasonable for EPA to enter and perform testing of the property during business hours. In particular, respondent wants the soil borings installed after business hours. The proposed testing appears to be minimally intrusive and designed to cause the least disruption to the tenant's business, especially considering the anticipated limited duration of the testing."

33. It is as though Mr. Burke attended a different conference than I participated in, as there was prolonged discussion regarding the manner in which the testing would interfere with the operations of Tesla and that testing that occurred during the four to six consecutive days would be disruptive. More telling is that EPA continues to fail to offer a valid reason why the testing cannot be performed after hours which I understand from Cannistra's counsel routinely occurs. We know from common sense that night work occurs and EPA has standby contractors who respond at all hours of day for emergencies. Typically construction work occurs during the evening to avoid disruption.

Conclusion

34. Cannistra continues to be puzzled by EPA's refusal to perform the work during reasonable hours. After receiving EPA's April 11th letter confirming the Order would not be modified in any means, Cannistra transmitted an email on April 17, 2019 to Daniel Gaughan to discuss the specific timing of the testing work and advising EPA that we conferred with Tesla who also expressed the same concerns about work being performed during Tesla's business hours. Tesla requested that testing activities occur after 6:00 p.m. when the facility is closed and not on the weekends, when its showroom was busiest. It requested the work occur Monday to Thursday, in the evening after the service center and showroom were closed. A copy of our April 17th email is attached hereto as Exhibit "L".

35. Unfortunately, we received back an email from EPA sticking to its prior determination that work would not be performed after hours. A copy of Mr. Gaughan's April 18th email is attached hereto as Exhibit "M". In his email Mr. Gaughan stated "as EPA has previously stated, for reasons including health and safety concerns, we will not perform

the work outside of normal business hours." The only reasons EPA has proffered over the last ten months for refusing to do the work during non-business hours is i) health and safety concerns,; ii) cost; and iii) that they would be making a precedent if they were to agree to do work after hours at our Property.

36. Each of those arguments is nonsense. Cannistra has offered to pay for the additional costs incurred by EPA and therefore financial consideration is not a concern. The concern this would create a precedent is irrelevant as EPA is required to consider each matter on a case by case basis in determining what is a reasonable time for access. Clearly given the tight site constraints, the nature of the investigation is more intrusive on this Property than it would be if the property were vacant land, a single family home or a parking lot on a larger site. Finally, the argument that doing the work outside of business hours would negatively impact health and safety is nonsensical. In fact, Cannistra argues the work being performed after hours, under the lights when the site would not be occupied by customers, employees, vendors and the parking lot would have fewer vehicles on it is in fact a safer work environment which cannot be disputed.

37. In fact, under all the facts presented, Cannistra submits that EPA's Administrative Order is deficient in its Findings of Fact and must be stricken and vacated and the hours of access it has imposed in the Administrative Order violates the CERCLA statute in that it does not provide for access at a reasonable time, under the circumstances.

38. For the foregoing reasons, Cannistra requests that EPA be preliminarily enjoined from enforcing its Order during the pendency of this action and until the Court issues a decision on Cannistra's request that the Administrative Order be stricken and

vacated or in the alternative, modified to provide EPA with access to the Site at reasonable times, after non business hours, at the expense of Cannistra.

VICTOR CANNISTRA

Sworn to before me this
22 day of April, 2019

Notary Public

NICHOLAS M. WARD-WILLIS
NOTARY PUBLIC, STATE OF NEW YORK
NO. 02WA5027769
QUALIFIED IN WESTCHESTER COUNTY
COMMISSION EXPIRES MAY 16, ~~1986~~ 2022

7787/01/670831v3 4/22/19

UNITED STATES DISTRICT COURT
SOUTHERN DISTRICT OF NEW YORK

---------- x

CANNISTRA REALTY, LLC,

Plaintiff,

-against-

UNITED STATES ENVIRONMENTAL PROTECTION AGENCY, ANDREW WHEELER, in his official capacity as Administrator of the United States Environmental Protection Agency, and ANGELA CARPENTER, in her official capacity as Acting Director of the Emergency and Remedial Response Division of the United States Environmental Protection Agency, Region 2,

Defendants.

---------- x

Civil Action No.

COMPLAINT

As and for its Complaint in this matter, Plaintiff Cannistra Realty, LLC ("Cannistra") alleges against Defendants United States Environmental Protection Agency, Andrew Wheeler, in his capacity as Administrator of the United Stated Environmental Protection Agency, and Angela Carpenter, in her capacity as Acting Director of the Emergency and Remedial Response Division of the United States Environmental Protection Agency, Region 2, as follows:

1. Cannistra commences this action seeking declaratory relief from this Court to vacate, set aside or otherwise modify an Administrative Order, Index No. CERCLA-02-2019-2009 issued on March 12, 2019 and signed by Angela Carpenter, Acting Director, Emergency and Remedial Response Division, U.S. Environmental Protection Agency, Region II to Cannistra under Section 104(e)(5) of the Comprehensive Environmental Response, Compensation and Liability Act of 1980, as amended (CERCLA), 42 U.S.C.

§9604(e)(5) (the "Administrative Order"), as said Administrative Order is arbitrary, capricious, without foundation in the Record and in contravention to the statutory authority upon which it was issued.

The Parties

2. Plaintiff Cannistra is a limited liability company registered in New York State with a mailing address of 43 Kensico Drive, 2nd Floor, Mount Kisco, New York.

3. Defendant United States Environmental Protection Agency is a governmental agency of the United States within the executive branch of the federal government. Its principal office is at 1200 Pennsylvania Avenue, N.W., Washington, D.C. 20460.

4. Defendant Andrew Wheeler is the Administrator of the United States Environmental Protection Agency. He is named in his official capacity.

5. Defendant Angela Carpenter is the Acting Director of the Emergency and Remedial Response Division of the United States Environmental Protection Agency, Region 2. Defendant Angela Carpenter signed the Administrative Order, dated March 12, 2019. She is named in her official capacity.

6. Defendants United States Environmental Protection Agency, Andrew Wheeler and Angela Carpenter are collectively referred to herein as "EPA."

Jurisdiction and Venue

7. This Court has jurisdiction under 5 U.S.C. §701 *et seq.*, under 28 U.S.C. §1331, and under 42 U.S.C. § 9613(b) of the Comprehensive Environmental Response, Compensation and Liability Act.

8. Venue is proper under 28 U.S.C. §§ 1391(b) and 1391(e)(1), and 42 U.S.C. § 9613(b) because a substantial part of the events or omissions giving rise to the claim occurred in the Southern District of New York, and because the property that is the subject of this action is situated in the Southern District of New York.

The Subject Property

9. Cannistra owns the real property at issue herein which is described in the Administrative Order as being "approximately 0.5 acres in size. The subject property is identified by municipal tax parcel number 69.65-2-3 and has a mailing address of both 115 Kisco Avenue and 125 Kisco Avenue, Mount Kisco, New York" (the "Site") (Administrative Order, Findings of Fact ¶4). The Site is within the jurisdiction of the United States Environmental Protection Agency, Region 2.

10. Cannistra acquired the Site on February 22, 1996. Its Members, who are accountants, occupied the Site and used it as their principal office from approximately 1988 until 2013. Their professional offices were staffed with accountants, support staff and sub-tenants, the principal use being office space.

11. In 2013, Cannistra entered into a long term, exclusive lease with a car dealership, Tesla, which lease commenced on August 15, 2013 for an initial term of 10 years and 3 months with two five year renewal options.

12. Tesla is the sole tenant of the Site and uses it as a showroom for the sales of new Tesla vehicles, the delivery of new vehicles that have been sold, servicing of its vehicles and customer charging of their vehicles. This location is Tesla's number one sales center in the northeast United States.

13. Tesla's use at the Site includes a showroom where potential customers have the ability to view the Tesla vehicles offered for sale. The salesroom is staffed by sales agents, managers and administrative staff. The Tesla showroom is open Monday through Fridays from 10:00 a.m. to 7:00 p.m., Saturday from 10:00 a.m. to 6:00 p.m. and Sunday 11:00 a.m. to 6:00 p.m.

14. Tesla prepares the cars on-site for delivery and delivers the cars to new customers on-site in the parking lot.

15. Tesla also maintains a service center on the Site where multiple vehicles are serviced inside the building. Cars that are waiting for service or have completed service are stored at the on-site parking lot. The Tesla service hours are Monday to Friday from 8:00 a.m. to 6:00 p.m. and Saturday from 8:00 a.m. to 4:00 p.m.

16. The Tesla service center includes a customer lounge so that customers can wait while their cars are being serviced and/or charged.

17. At any given time during business hours, the Tesla parking lot is completely occupied by a) cars waiting for delivery to new customers; b) cars waiting for service; c) cars that have been serviced and are waiting for customers to pick up; d) cars of potential customers visiting the showroom; e) cars of Tesla employees; and f) vendor vehicles performing deliveries of new cars and car parts during the day. A large number of Tesla employees and customers are on the site during business hours.

18. Tesla is not permitted to park or deliver its vehicles off-site and all employee cars must be parked on-site.

19. Tesla has over twenty-five (25) employees at the Site.

Canadian Radium Site

20. The Site is immediately adjacent to 105 Kisco Avenue which comprises a portion of the Canadian Radium Corporation Superfund Site (the "Canadian Radium Site"). EPA has documented the release and/or present release of hazardous substances into the environment at the Site. Such hazardous substances include radium-226 and thorium-230. (Administrative Order, Findings of Fact ¶5).

21. The radioactive contamination present at the Canadian Radium Site is believed to be attributable to the historic operation of the Canadian Radium and Uranium Corporation ("CRU") facility, formerly located at the Canadian Radium Site where operations occurred from approximately 1943 to 1966. (Administrative Order, Findings of Fact ¶6).

22. In 1966 the CRU facility was demolished as part of the Mount Kisco Urban Renewal Project. (Administrative Order, Findings of Fact ¶7).

23. Since the late 1970's EPA and other State and Local agencies performed periodic investigations of the radioactive contamination at the Canadian Radium Site. (Administrative Order, Findings of Fact ¶8).

24. Now, some forty years after EPA and other State and Local agencies have known about the site, the EPA had recently renewed investigations at the Canadian Radium Site. In 2015 and 2016, EPA performed removal assessment activities at the Canadian Radium Site which included radiological survey and soil sampling. (Administrative Order, Findings of Fact ¶8).

25. Analytical results of the soil sampling at the Canadian Radium Site indicated exceedances of EPA Site specific action levels for radium-226. (Administrative Order, Findings of Fact ¶8).

EPA Request For Access To The Cannistra Site

26. EPA conducted its investigation activity at the Canadian Radium Site and had results from said investigation in 2016 and 2017, but EPA did not contact Cannistra until May 10, 2018 when the EPA Project Manager telephoned a principal of Cannistra and requested access to the Site.

27. Thereafter, Cannistra sought additional information from EPA including the opportunity to review the historic information presented in the 2016 and 2017 report and a work plan for the work EPA proposed to be performed on Cannistra's property, which was provided on June 15, 2018.

28. In August 2018, Cannistra provided EPA with a response indicating consent would be granted to EPA provided that certain assurances were given by EPA including insurance from EPA's contractors and that the hours of operation by EPA and its contractors would not interfere with the tenant's use of the Site.

29. EPA refused to agree to modify its scheduled activities so as to take into account the tenant's intense use of the Site and so that such work would not interfere with tenant's use of the Site.

30. Cannistra and EPA met on November 1, 2018, but the EPA continued to refuse to make reasonable modifications to its time to access the Site and perform its testing work.

31. After the meeting, Cannistra transmitted a letter on November 9, 2018 to the EPA setting forth its request, and confirming it would grant access to the Site and requested the following from EPA:

a) That our client and the tenant be named as additional insured on the contractor's and any subcontractor's general liability and worker's compensation insurance and proof of same be provided in advance of work commencing.

b) The air canisters for the radon testing be installed and removed during the non-operating hours of the tenant. We previously provided you with the tenant's operating hours and it does not appear this request is onerous. For example, a 72 hour test could be implemented in such a manner that the canisters are installed on a Wednesday evening after 8:00 p.m. and collected on a Sunday morning before 11:00 a.m.

c) As it appears the gamma ray detector using the "buggy" could be performed in 2 to 3 hours, that work can be completed during overnight hours or even commence on a Sunday at 7:00 a.m. and be completed prior to the tenant's operations commencing at 11:00 a.m.

d) Once the results of the radon and gamma survey testing are received and provided to our client, we can then discuss a schedule for installing the soil borings, should such additional work be necessary. We request the work be performed during overnight hours. Our client is agreeable to paying for and providing portable lights.

32. Despite Cannistra confirming it would provide access to EPA to the Site, EPA refused to cooperate with Cannistra and by communication dated December 4, 2018 confirmed that it would not modify such a request for access to take into account Cannistra and its tenant's legitimate business and safety concerns.

33. Thereafter, EPA was silent over the intervening three months until the issuance of the Administrative Order on March 12, 2019.

The March 12, 2019 Administrative Order

34. The Administrative Order set forth nine (9) Findings of Fact, none of which described the subject property or recognized the use of the property as a car dealership or the hours of operation of the car dealership. Thus, the Administrative Order was devoid of any findings of fact, analysis or recognition as to the timing of its access to the Site, in defiance of the very statute the EPA was drawing upon for its authority, which requires that such access be upon "reasonable times."

35. The Administrative Order directed Cannistra to provide unfettered access to the property, set forth various enforcement provisions and provided Cannistra with an opportunity to confer with EPA regarding its Order.

36. Upon receipt of the Administrative Order, Cannistra made a further good faith effort to cooperate with EPA and offered to pay, at its cost and expense, any additional costs EPA or its contractor would incur by performing its investigation work during hours that did not interfere with the tenant's operations. EPA refused such reasonable request.

37. Cannistra timely indicated its request for an opportunity to confer with EPA. Such conference was convened at EPA's headquarters on April 4, 2019, during which time Cannistra advised EPA of procedural and substantive flaws in EPA's Order including nonexistent findings of fact and how the Administrative Order was in contravention of the law.

38. Notwithstanding the conference, on April 11, 2019, EPA refused to modify its Order.

AS AND FOR ITS FIRST CAUSE OF ACTION

39. Cannistra repeats and realleges each and every allegation set forth in Paragraph "1" to "38" as though repeated fully herein.

40. Congress has granted EPA the authority to access property pursuant to 42 U.S.C. §9604.

41. 42 U.S.C. §9604(e)(3) entitled Information Gathering and Access, Entry, provides that "any officer, employee or representative [of EPA] is authorized to enter at *reasonable times* property where entry is needed to determine the need for response or the appropriate response or to effectuate a response action under this sub-chapter." (emphasis added).

42. Section 42 U.S.C. 9604(e)(4)(a) also provides that each such inspection shall be completed with "reasonable promptness."

43. In authorizing EPA with the ability to enter upon properties for purpose of investigations, Congress limited EPA's powers to be reasonable for the time of access and that such activities be done promptly. EPA's Administrative Order is in contravention of 42 U.S.C. §9604 as it does not provide for entering upon reasonable times.

44. Rather, the Order states in paragraph 17:

> Based on the Findings of Fact and Conclusions of Law and determinations set forth above, and on the Administrative Record for this Order, Respondent is hereby ordered to provide to EPA and its officers, employees, agents, contractors, and any other designated representatives *full and unrestricted entry and access*

> to the subject property for the purpose of performing investigatory response activities, including the tasks referred to in Paragraph 9, above. Respondent shall provide such access to the subject property from the effective date of this Order until EPA informs Respondent in writing that the activities for which access is needed are complete and EPA no longer requires access to perform the above-described response activities. EPA anticipates the duration of access to be four to six days. (emphasis added).

45. EPA's Administrative Order is in contravention of 42 U.S.C. §9604 as it does not set forth reasonable times for which EPA shall have access. Rather, EPA has determined that it can have access at any time.

46. Accordingly, for the reasons set forth herein, Cannistra respectfully requests the Court make a Declaration that EPA's Administrative Order is in contravention of law as it fails to authorize EPA access to the property at reasonable times.

AS AND FOR A SECOND CAUSE OF ACTION

47. Cannistra repeats and realleges each and every allegation set forth in Paragraph "1" to "46" as though repeated fully herein.

48. EPA's Administrative Order is arbitrary and capricious as the Findings of Fact fail to recite any facts regarding the reasonableness of the access EPA granted itself pursuant to the Order, which such access is full, unrestricted access to perform the investigatory work at any time of day and on any day, in essence, 24/7.

49. There is no finding of fact as to the current use of the property.

50. There is no finding of fact as to the tenant on the property.

51. There is no finding of fact as to the hours of operation on the property.

52. There is no finding of fact as to if EPA's proposed investigatory work would interfere with the tenant's use of the property.

53. There is no finding of fact as to whether EPA's investigatory activities would interfere with the general public's use of the property.

54. There is no finding of fact as to whether Cannistra's request that the work be performed after hours, at Cannistra's expense, is reasonable.

55. There is no finding of fact at all as to the reasonableness of the access that has been ordered.

56. The Findings of Fact are deficient in that Cannistra granted access to EPA subject to the access being at reasonable times.

57. Accordingly, for the reasons set forth herein, Cannistra respectfully requests that the Court declare the Administrative Order as procedurally and substantively deficient and an abuse of EPA's discretion and the Order be stricken and vacated.

WHEREFORE, Cannistra respectfully requests the following relief:

1) On its First Cause of Action, a declaration that EPA has violated 42 U.S.C. §9604 by issuing an Administrative Order that provides for access at all times of the day without providing for any provision that such access be at reasonable times taking into account the current use of the property and accommodations offered by Cannistra;

2) On its Second Cause of Action, Court issue a declaration striking and vacating the Administrative Order as an abuse of discretion and arbitrary and

capricious for failing to make any findings of fact relevant to the reasonableness of the hours of access directed by EPA; and

3) The Court make any other determinations and granting of relief as it deems appropriate.

Dated: White Plains, New York
April 22, 2019

KEANE & BEANE, P.C.

By: _____

Nicholas M. Ward-Willis
Attorneys for Plaintiff
445 Hamilton Avenue, 15th Floor
White Plains, New York 10601
(914) 946-4777

7787/01/670809v3 4/22/19

EXHIBIT B1

UNITED STATES ENVIRONMENTAL PROTECTION AGENCY
REGION 2

IN THE MATTER OF ACCESS TO REAL PROPERTY IN WESTCHESTER COUNTY, NEW YORK Cannistra Realty LLC, Respondent. Proceeding under Section 104(e) of the Comprehensive Environmental Response, Compensation, and Liability Act of 1980, as amended, 42 U.S.C. § 9604(e).	Index No. CERCLA-02-2019-2009

ADMINISTRATIVE ORDER DIRECTING COMPLIANCE
WITH REQUEST FOR ACCESS

I. JURISDICTION

1. This Administrative Order ("Order") is issued to Cannistra Realty LLC (hereinafter, "Respondent"), pursuant to the authority vested in the President of the United States by Section 104(e)(5) of the Comprehensive Environmental Response, Compensation, and Liability Act of 1980, as amended ("CERCLA"), 42 U.S.C. § 9604(e)(5), and Section 300.400(d)(4) of the National Oil and Hazardous Substances Pollution Contingency Plan, 40 CFR § 300.400 (d)(4) ("NCP"). This authority has been delegated to the United States Environmental Protection Agency ("EPA") and, within EPA, to the Director of the Emergency and Remedial Response Division in Region 2.

II. STATEMENT OF PURPOSE

2. This Order requires Respondent to grant to EPA and its officers, employees, agents, contractors, and representatives entry and access to the property located at 125 Kisco Avenue, Mount Kisco, New York (the "Subject Property") for the purpose of information gathering, determining whether there is a need for a response action, or otherwise enforcing the provisions of CERCLA, as described in more detail in Paragraph 9, below. This Order further requires Respondent to refrain from interfering with access to the Subject Property by EPA and its officers, employees, agents, contractors, and designated representatives for the purposes set forth herein.

III. FINDINGS OF FACT

3. Respondent is a limited liability company registered in New York State, with a mailing address of 43 Kensico Drive, 2nd Floor, Mount Kisco, New York.

4. Respondent owns the Subject Property, which is approximately 0.5 acres in size. The Subject Property is identified by municipal tax parcel number 69.65-2-3 and has mailing addresses of both 115 Kisco Avenue and 125 Kisco Avenue, Mount Kisco, New York. There is a building and a parking lot located on the Subject Property.

5. The Subject Property is immediately adjacent to 105 Kisco Avenue (also identified as 107 Kisco Avenue), which comprises a portion of the Canadian Radium and Uranium Corporation Superfund Site ("Site"). EPA has documented the release and/or threatened release of hazardous substances into the environment at the Site. Such hazardous substances include radium-226 and thorium-230.

6. The radioactive contamination present at the Site is believed to be attributable to the historic operations of the Canadian Radium and Uranium Corporation ("CRU") facility, formerly located at the Site. From approximately 1943 to 1966, the CRU facility engaged in the recovery of uranium and other radioactive elements from uranium-bearing sludge, old instrumentation, and watch dials. While the CRU facility was operational, federal and state agencies inspected the facility and encountered high levels of radioactive contamination.

7. In 1966, the CRU facility was demolished as part of a Mount Kisco urban renewal project. According to the final demolition report (Attachment "A"), buildings comprising the CRU facility were demolished by crane, and demolition debris was collected, either by a clamshell bucket or a bulldozer shovel, into piles at the Site. One week after the start of the demolition, demolition debris was loaded onto trucks and transported off-site for disposal. The loading of the trucks for off-site disposal continued for one week. Following disposal of the demolition debris, "the site and surrounding areas" were "scrap[ed] . . . to required depths." The Site was then backfilled and graded.

8. Since the late 1970s, EPA and other state and local agencies have performed periodic investigations of the radioactive contamination at the Site. In 2015 and 2016, EPA performed removal assessment activities at the Site, which included radiological surveying and soil sampling. Levels that exceeded the background gamma reading of 9 microroentgens per hour (μR/hr) have been observed throughout the Site, including along the shared boundary with the Subject Property. A "hot spot" (i.e., an area with gamma readings above 24 μR/hr) has been observed in the northeast corner of the Site, in close proximity to the Subject Property. Analytical results of the soil sampling at the Site indicate numerous exceedances of the EPA Site-Specific Action Level for radium-226 of 2.52 picocuries per gram (pCi/g). Soil samples taken in northwestern portion of the Site, within a few feet of the Subject Property, indicate radium-226 levels of approximately 30 pCi/g at depth. Radium-226 is a radionuclide, and radionuclides are hazardous substances pursuant to CERCLA.

9. Given the results of the EPA assessment activities at the Site, as well as the historic disturbance of radioactive contamination at the Site during the 1960s demolition work, there is a reasonable basis to believe that radioactive contamination from the Site may have migrated to the adjacent Subject Property. EPA requires access to the building and grounds at the Subject Property for approximately 4 – 6 days in order for EPA to perform non-intrusive ground radiological surveying, radon sampling, and soil sampling. This work is further described in the draft Site-Specific Quality Assurance Project Plan (Attachment "B"), which was provided to Respondent on June 15, 2018. The investigatory activities are necessary to determine whether there is a release or threatened release of hazardous substances at the Subject Property.

10. Respondent has failed or refused to grant EPA access to the Subject Property to perform the above-described response activities. Specifically, Respondent has failed to execute EPA's standard consent to access form despite repeated requests. Respondent has insisted on certain pre-conditions to granting access that are unacceptable to EPA and inconsistent with EPA's national access policy, as discussed below. EPA first contacted Respondent in May 2018 to request that Respondent voluntarily provide EPA access to the Subject Property. By email dated May 21, 2018, EPA sent Respondent a proposed consent form setting forth those response activities that EPA sought access to perform at the Subject Property. Following that correspondence, EPA repeatedly contacted Respondent to ascertain whether Respondent would voluntarily consent to granting EPA access to the Subject Property. It was not until late August 2018 that Respondent provided EPA with a letter characterized as a "proposal for access" (Attachment "C"). This letter contained several pre-conditions to granting access that had already been discussed at length by the parties and rejected by EPA. EPA traveled to Respondent's offices on November 1, 2018, to further explain the need for access to the Subject Property, but Respondent continued to insist on the unacceptable pre-conditions for granting access.

11. Pursuant to EPA Directive 9829.2 (June 5, 1987), it is EPA policy to treat "conditions which restrict or impede the manner or extent of an inspection or response action [or] impose indemnity or compensatory obligations on EPA . . . as denial of consent." The unacceptable pre-conditions established by Respondent include demands concerning insurance coverage for Respondent and the tenant of the Subject Property, significant restrictions on the hours that EPA could perform response activities, and a phasing of the work that would require EPA to demobilize from the Site after performing radiological surveying and radon sampling, followed by a "discuss[ion with Respondent of] a schedule for installing the soils borings, should such additional work be necessary." (See Attachment "D.") As has been explained to Respondent, EPA has already determined that soil sampling must be performed at the Subject Property in order to determine whether there is radioactive material at depth. A second mobilization would be a costly and inefficient use of government time and resources and would result in further delay.

12. Respondent's denial of consent regarding EPA access to the Subject Property has delayed EPA's performance of investigatory activities, which are necessary to determine whether the Subject Property poses an unacceptable risk to public health and the environment.

IV. CONCLUSIONS OF LAW AND DETERMINATIONS

13. Respondent is a "person" within the meaning of Section 101(21) of CERCLA, 42 U.S.C. § 9601(21).

14. Based on the foregoing findings of fact in Section III of this Order, EPA has determined that there is a reasonable basis to believe there may be a release or a threat of release of a hazardous substance at the Subject Property within the meaning of Section 104(e)(1) of CERCLA, 42 U.S.C. § 9604(e)(1), as the terms "hazardous substances" and "release" are respectively defined in Sections 101(14) and 101(22) of CERCLA, 42 U.S.C. §§ 9601(14) and (22).

15. For purposes of Section 104(e)(3) of CERCLA, 42 U.S.C. § 9604(e)(3), the Subject Property is a facility as defined in Section 101(9) of CERCLA, 42 U.S.C. § 9601(9), or an establishment, place, or property:

    (A) from which a hazardous substance or pollutant or contaminant may be or has been generated, stored, treated, disposed of, or transported;
    (B) from which or to which a hazardous substance or pollutant or contaminant has been or may have been released;
    (C) where such a release is or may be threatened; and/or
    (D) where entry is needed to determine the need for response or the appropriate response or to effectuate a response action under CERCLA.

16. EPA has requested on multiple occasions that Respondent grant EPA access to the Subject Property for the purposes of performing the response activities described in Paragraph 9, above, but Respondent has repeatedly denied such access.

V. ORDER

17. Based on the Findings of Fact and Conclusions of Law and Determinations set forth above, and on the Administrative Record for this Order, Respondent is hereby ordered to provide to EPA and its officers, employees, agents, contractors, and any other designated representatives full and unrestricted entry and access to the Subject Property for the purpose of performing investigatory response activities, including the tasks referred to in Paragraph 9, above. Respondent shall provide such access to the Subject Property from the effective date of this Order until EPA informs Respondent in writing that the activities for which access is needed are complete and EPA no longer requires access to perform the above-described response activities. EPA anticipates the duration of access to be 4 to 6 days.

18. Respondent shall not interfere with EPA's exercise of its access authorities pursuant to Section 104(e) of CERCLA and Section 300.400(d) of the NCP, and it shall not interfere with or otherwise limit any activity conducted at the Subject Property pursuant to this Order by EPA, its officers, employees, agents, contractors, or any other designated representatives. Any such interference shall be deemed a violation of this Order.

19. Nothing herein limits or otherwise affects any right of entry or access held by the United States.

20. This Order shall apply to and be binding upon Respondent and its successors and assigns, each agent of Respondent, and all other persons and entities who are under the direct or indirect control of Respondent.

21. In the event of any transfer of any interest in the Subject Property by Respondent or its agents, successors, or assigns, Respondent and its agents, successors, or assigns shall not transfer such interest in any manner that would have the effect of hindering or otherwise limiting continued access to the Subject Property by EPA or its officers, employees, agents, contractors, or any other designated representatives for the purpose of carrying out the activities identified in Paragraph 9 of this Order. Respondent or its agents, successors, or assigns shall notify EPA in writing not less than thirty calendar days prior to any such transfer, and it shall include in such notice the name, address, and other contact information of the party to whom such interest will be conveyed; Respondent shall also, not less than thirty days prior to any such transfer, notify the other parties to the conveyance of the provisions of this Order and shall provide a copy of this Order to each such party.

VI. ENFORCEMENT

22. Compliance with this Order shall be enforceable pursuant to Section 104(e)(5) of CERCLA, 42 U.S.C. § 9604(e)(5). A court may impose on Respondent civil penalties of up to $57,317 per violation per day (or such higher amount as may be established pursuant to the Debt Collection and Improvement Act of 1996 ("DCIA")), as provided in Section 104(e)(5) of CERCLA, 42 U.S.C. § 9604(e)(5), and the DCIA (see Civil Monetary Penalty Inflation Adjustment Rule, 84 Fed. Reg. 2059 (February 6, 2019), a correction published at 84 Fed. Reg. 5955 (February 25, 2019), and 40 C.F.R. Part 19.4), for each day that Respondent unreasonably fails to comply with this Order. Nothing herein shall preclude EPA from taking any additional enforcement actions and/or other actions it may deem necessary for any purpose, including the prevention or abatement of a threat to the public health, welfare, or the environment, arising from conditions at the Subject Property and recovery of the costs thereof.

23. Nothing in this Order constitutes a waiver, bar, release, or satisfaction of or a defense to any cause of action that EPA has now or may have in the future against Respondent or any entity that is not a party to this Order.

24. Nothing in this Order shall affect in any manner the right of EPA to issue any other orders to or take any other administrative or civil action against Respondent or any other person under CERCLA related to the Subject Property or any other facility.

25. Nothing in this Order constitutes a decision on preauthorization of funds under Section 111(a)(2) of CERCLA, 42 U.S.C. § 9611(a)(2).

VII. ADMINISTRATIVE RECORD

26. EPA has established an Administrative Record for this Order that contains the documents that form the basis for the need for access and the issuance of this Order. The Administrative Record is available electronically for review. Respondent may contact Daniel Gaughan, the On-Scene Coordinator for the Site, at (732) 906-6984 if Respondent wishes to review the Administrative Record.

VIII. OPPORTUNITY TO CONFER

27. Within five (5) days after receipt of this Order by Respondent, Respondent may request a conference with EPA on any matter pertinent to this Order, including its applicability, the factual findings, the conclusions of law or determinations upon which it is based, or any other relevant and material issues or contentions that Respondent may have regarding this Order. Any such conference shall be held no later than five (5) days after Respondent's request, unless the parties mutually agree to a date beyond that time. Respondent may appear in person or by an attorney or other representative at such a conference, which may be held in person or by conference call. Respondent may also submit written comments or statements of position on any matter pertinent to this Order no later than the time of the conference, or at least two days before the effective date of this Order if Respondent does not request a conference. EPA will deem Respondent to have waived its right to the conference or to submit written comments if Respondent fails to request the conference or submit comments within the specified time period(s). Any request for a conference or written comments or statements should be submitted to:

Margo Ludmer
Assistant Regional Counsel
U.S. Environmental Protection Agency, Region 2
290 Broadway, 17th Floor
New York, NY 10007-1866

Telephone: (212) 637-3187
E-mail: ludmer.margo@epa.gov

IX. EFFECTIVE DATE; COMPUTATION OF TIME

28. This Order shall be effective seven (7) days after its receipt by Respondent unless a conference is timely requested as provided above. If a conference is timely requested, after the conference EPA will notify Respondent of its determination and, if applicable, the date upon which the Order shall become effective. Any EPA notification under this paragraph may, at EPA's discretion, be provided to Respondent by facsimile, electronic mail, or oral communication; if EPA does use such a form of notification, it will also confirm such notification by first class, certified, or expedited mail to Respondent or its legal counsel. Any amendment or modification of this Order by EPA shall be made or confirmed in writing.

29. For purposes of this Order, the term "day" shall mean a calendar day unless expressly stated to be a business day. "Business day" shall mean a day other than a Saturday, Sunday, or federal holiday. When computing any period of time under this Order, if the last day would fall on a Saturday, Sunday, or federal holiday, the period shall run until the next business day.

X. NOTICE OF INTENTION TO COMPLY

30. Within two (2) days after the effective date of this Order, Respondent shall notify EPA in writing whether Respondent intends to comply with the terms of this Order. Such written notice shall be sent to Ms. Ludmer of EPA at the address set forth in Paragraph 27, above. Respondent's failure to notify EPA in a timely manner of its unconditional intent to comply with this Order shall be construed as non-compliance with this Order and treated as a violation of the Order.

XI. TERMINATION

31. This Order and all of its terms and provisions shall remain in effect until the completion of the above-described investigatory activities at the Subject Property.

SO ORDERED.

A. Carpenter

Angela Carpenter, Acting Director
Emergency and Remedial Response Division
U.S. Environmental Protection Agency, Region 2

3-12-19
Date of Issuance

Attachment A to
Access Order
(CERCLA-02-2019-2009)

ISOTOPES, INC.

A TELEDYNE COMPANY

IWL-1638-123

DECONTAMINATION AND DEMOLITION OF THE CANADIAN RADIUM & URANIUM CORPORATION FACILITY

69 Kisco Avenue

Mount Kisco, New York

FINAL REPORT

for the

MOUNT KISCO URBAN RENEWAL AGENCY

Municipal Building

Mount Kisco, New York

J. M. Matuszek

January 19, 1968

ISOTOPES, A Teledyne Company

50 Van Buren Avenue

Westwood, New Jersey 07675

NUCLEAR SCIENCE AND TECHNOLOGY

CONTENTS

I.	INTRODUCTION	1
II.	DECONTAMINATION AND DEMOLITION	3
III.	PERSONNEL PROTECTION	14
IV.	REFERENCES	20
	APPENDIX A	21
	APPENDIX B	22

ISOTOPES

DECONTAMINATION AND DEMOLITION OF THE

CANADIAN RADIUM & URANIUM CORPORATION FACILITY

FINAL REPORT

I. INTRODUCTION

During the period November 14 to December 15, 1966, the Canadian Radium and Uranium Corporation (Can-Rad) facility at 69 Kisco Avenue, Mt. Kisco, New York was decontaminated and demolished. The decontamination, demolition, and disposal of contaminated material was carried out by ISOTOPES and its subcontractor Rossi-Halmar Construction Corporation according to specifications set forward in Item I, Contract Unit II (October 21, 1965) and Item I, Contract Unit II A, Amendment No. 1 (February 15, 1966) for Kisco Avenue-Suttons Lane Urban Renewal Project and the burial exemption provided to the Mt. Kisco Urban Renewal Agency by the New York State Department of Health.

Specific requirements for radiological protection of personnel, for final limits of contamination of the site and equipment, and for handling of debris were set forward in the ISOTOPES license application No. 2238 (March 31, 1966) to the New York State Coordinating Council on Atomic Energy supporting correspondence of May 18, 1966 and the letter of approval of June 10, 1966 from the New York State Department of Labor. The three documents were used for all operational guidelines during decontamination, demolition and waste removal. Because these documents detailed the safety precautions to be taken, they were given precedence over any conflicting requirements imposed by the original specifications set up

II. DECONTAMINATION AND DEMOLITION

A. Monitoring Equipment

In addition to the heavy construction equipment provided by Rossi-Halmar, ISOTOPES used several types of personnel monitoring equipment for radiological protection. The equipment used on-site included two Eberline PAC-3G α-monitors, one Eberline FM-3G α-floor-monitor, a Victoreen Thyac, a Ludlum γ-scintillation monitor, a Baird Atomic Cutie-Pie, an Eberline ES10 β-γ survey meter, two Unico personnel air monitors, pocket dosimeters, and a ZnS(Ag) α-scintillation counter with RIDL Designer Series electronics.

Urinalyses and breath analyses were performed using counting equipment available at the Westwood facility of ISOTOPES.

Film badges from R.S. Landauer film badge service were provided to all personnel on-site as well as the truck drivers and the buildozer operator at the dump.

B. Pre-operational Survey and Decontamination

Figure 1 provides a general site-plan of buildings, grounds and surrounding structures. Figure 2 shows the results of the initial survey of the second floor of the main building. All readings were taken at one centimeter above the floor. The entire floor surface was monitored at one meter intervals by "walking" the area. On this "scan" one spot at ~ 4 mR/hr and one at ~ 2 mR/hr were found. These were removed into a high level waste drum. Readings were then taken at ten foot intervals across the back section of the building for record purposes. These were all below one mR/hr except for a 60 sq ft area along the northeast wall party to the Haggerty Millwork building. The contamination in this area was found to be quite firmly fixed in paint and concrete. Rather than create a more serious dust

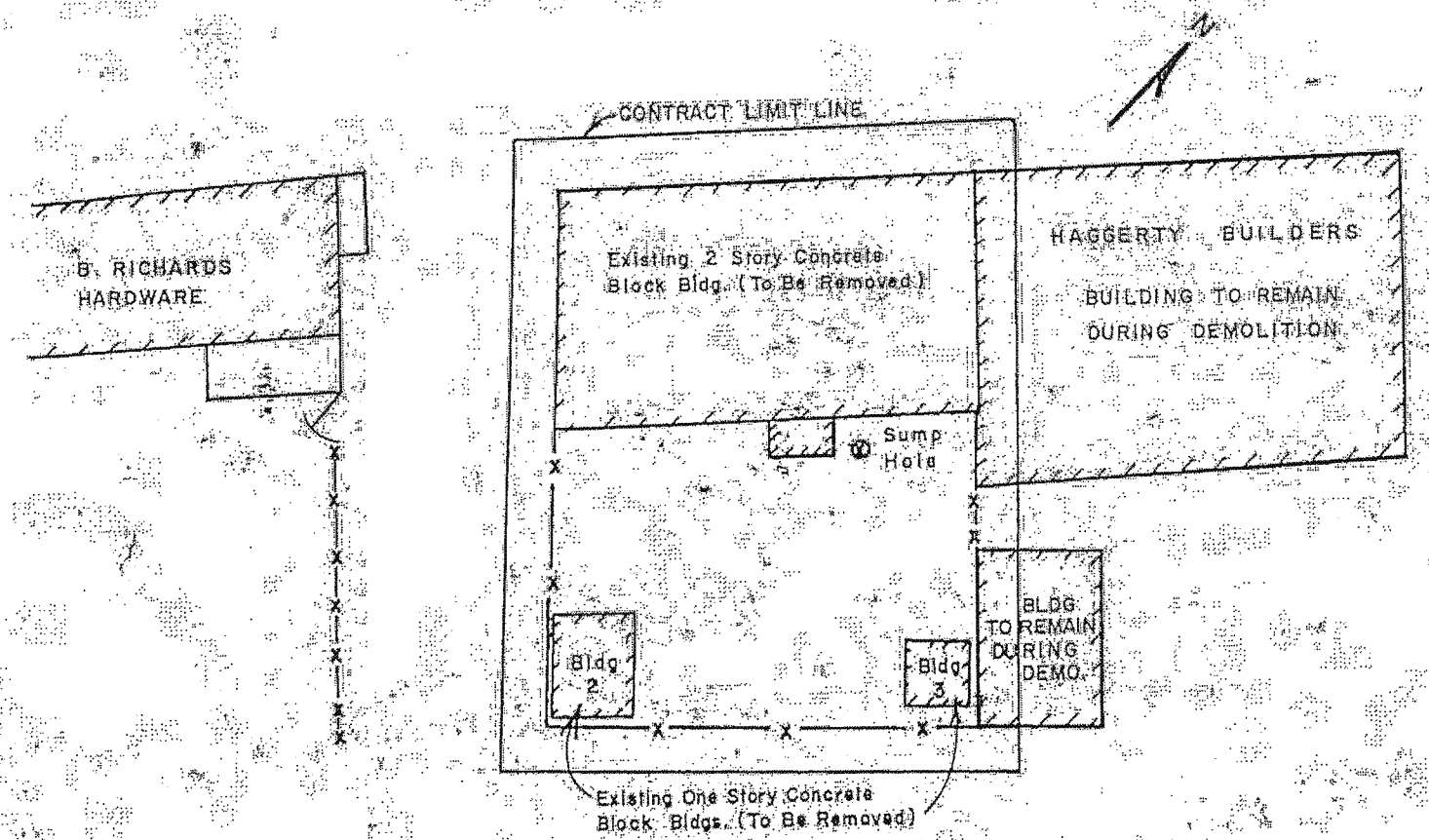

FIGURE 1. CANADIAN RADIUM AND URANIUM FACILITY SITE PLAN

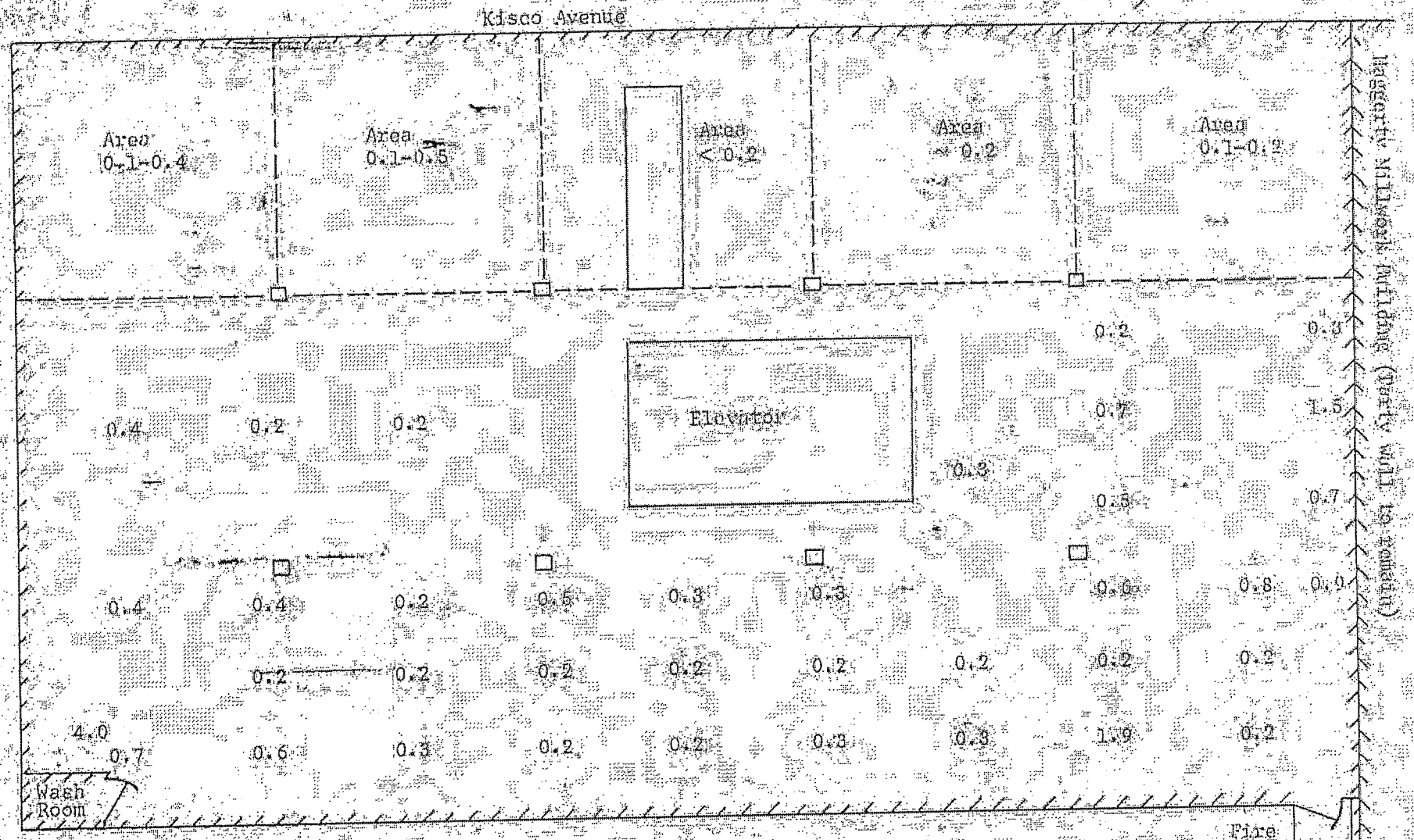

Figure 2. Survey of second floor of Building 1 (all values in mr/hr @ 1 cm).

problem it was decided to leave this activity fixed for demolition. This plan received the approbation of Messrs. Paul and Weber prior to start of demolition. The total amount of radium to be buried at Croton Point Dump was estimated from this survey to be ~ 3 mg.

The first floor showed only small amounts of radium contamination, mostly encapsulated in small vials. When these were removed no further contamination requiring separate removal existed on the first floor.

The cellar was found to be filled with ~ 18 inches of water, precluding a careful survey for sources. A general survey of the cellar with the Ludlum γ-survey meter indicated that no appreciably high-level sources were left in the cellar.

A small appendage to the back of the main building had apparently been used for initial separation of radium sources with wastes being discharged into a small sump hole beside the building. A few pieces of contaminated glassware (< 10 mR/hr on each) were removed from the building into the hot waste drum. The silt in the sump hole was also shoveled into the waste drum until the activity level for a probe lowered into the hole registered < 1 mR/hr.

Building 3 on the east corner of the lot contained no high level contamination. A small spot in the soil in front of the door registered 2 mR/hr and was shoveled into the high-level waste drum.

Building 2 on the south corner of the lot contained 2.5 to 3 mg of radium as loose sources, mostly in contaminated glassware in a large storage cabinet and on a lab bench. These sources were removed into the high-level waste drum. Lab benches and several areas of the floor and walls were sponged with Turco cleaner and water to decontaminate removable-activity levels up to 5 mR/hr at 1 cm. This operation decreased contamination levels sufficiently.

so that the building and all contents could be safely removed to Croton Point Dump per license specifications. Wash rags and sponges were removed into the high-level waste drum.

In general, most surfaces in Building 1 exhibited removable activity, < 50 dpm/100 cm^2. After removal of the loose sources mentioned previously, a few small areas on both floors of the main building were sponged with Turco cleaner and water until all smears indicated levels below 50 dpm/100 cm^2. As added protection against loose activity spreading as dust during demolition, the interior of each building was thoroughly wet down with a fog spray prior to start of demolition. The additional water produced in this spraying operation did not materially change the water level in the cellar; nor did any obvious change in radium concentration occur in the cellar water.

The preoperational survey and decontamination effort consumed the effort of a 4-man team for the entire week November 14-18, 1966. Actual demolition and removal of materials did not begin until the following week when assurance had been achieved that all conditions specified in the license application had been reached.

All off-site areas suspected to be contaminated were found to be below license limits and did not require further decontamination. Also, Kisco Avenue was surveyed with the Ludlum γ-scintillation monitor to Route 133 to establish background levels along the roadway.

C. Demolition, Removal and Burial

Prior to the major demolition effort, a large section of clay-tile wall forming the northeast wall of the main building (party to Haggerty Millworks) was demolished by hand since it could not be cleaned to meet final site specifications. The reinforced-concrete ceiling and floors were then severed using an air-hammer.

The outbuildings were first to be demolished using a crane with a 60-foot boom and clamshell. All material was monitored with the Thyac as it was picked up with the clamshell or bulldozer shovel. Throughout the demolition operation, including the main building, no excessively high-level contamination was found and all debris constituted "pile B" as defined in the license application. Most of the surface soil on the lot also fell into this category, though decreasing in level to "pile C" material at increased depth.

All buildings were demolished and material checked and piled up during the week of November 21-25. All debris met the specification requiring < 1 mR/hr with most < 0.1 mR/hr at one foot.

Loading operations commenced on November 28 and continued until December 5. The delay between start of demolition and loading was necessitated by the limited working space on the site.

The first 3 trucks were lined with polyethylene sheeting prior to loading. However, severe wind and rain throughout this operation made the lining operation a safety hazard. At the request of Mr. Paciello and the concurrence of Commissioner Quinn and Mr. Paul this operation was discontinued. The tailgate lining was maintained to insure that debris did not sift out; the welded steel bodies insured that no other leakage could occur. Trucks were continually monitored on return from Croton Point Dump to insure that discontinuance of the lining did not cause undue increase in contamination of the trucks. All trucks were loaded to approximately two-thirds normal capacity (no debris standing above the sideboards) and covered with canvas tarpaulins. Contamination of the trucks proved to be so slight that only hosing was required to remove small amounts of contaminated loose debris. The tarpaulins were monitored with the FM-3G and were returned to normal service without any need for decontamination.

Since there was limited space on-site, the trucks were loaded in the dirt road between the Can-Rad Facility and the L. B. Richards Hardware Store. After loading ceased each day the road was scraped down to remove any debris that may have dropped from the dozer shovel. At the end of the job the entire road surface was scraped and monitored until it was reduced to background levels. These scrapings were also buried at Croton Point Dump. Kisco Avenue was monitored to the south end of the Richards Company Building each night.

Burial at Croton Point was made at a location specified by authorities from the Westchester County Department of Parks. The Mt. Kisco Urban Renewal Agency took responsibility for the burial work. No serious problems were encountered at the burial site.

Some sources which were loaded onto one truck by the Westchester County Department of Health (Appendix A) resulted in a minor variation above background at the burial site. Although the readings were quite low (~ 0.2 mR/hr above background when covered by approximately two feet of soil), ISOTOPES requested that the Agency add another three feet of clean fill over the general area under which these sources were buried. Once completed this reduced the readings at the burial site to background.

All trucks were required to follow a prearranged route between the site and dump. The entire 14-mile route was monitored visually and with the Ludlum survey meter each evening on completion of work. On the first day of hauling, a single concrete block fell off one truck onto Route 133 in Mt. Kisco. No contamination occurred, and the problem was rectified by reiterating the requirements for underloading to the bulldozer operator. No other losses occurred during the burial operation. The high-level waste drum was removed on December 5 by Nuclear Diagnostic Laboratories of Peekskill, New York.

D. Post-Operational Survey

On completion of demolition and burial of the building and scraping of the site and surrounding areas to required depths, the site was surveyed for final record (Figure 3). Two locations on the Haggerty Millwork wall were found to be above specifications. One was removed by chiseling out the masonry. The second appeared to be the tailings from a leaking waste drum which Can-Rad had apparently stored on the second floor fire escape. A streak of activity roughly 12 ft. x 1 ft. showed a contamination level of 1-2 mR/hr at 1 cm. Removal of these load-bearing blocks would have severely strained the integrity of the building creating a serious safety problem to the occupants. Since the contamination level was so low (< 0.1 mg Ra) that the interior of the wall was at background, the activity was sealed in with 1 to 2 inches of mortar. This coating of concrete reduced the external dose to levels permissable for release to the general public. Since this structure was to be demolished within a year, such disposition did not present any long term radiological hazard. Nor did it present a problem for future demolition since, as well as being a small amount, spread over a relatively large area, it was so firmly fixed into the pores of the concrete block that washing prior to coating resulted in no change in activity level. No further radiological health precautions need be considered for future demolition work on the site. At this point Messrs. Weber and Paul approved the start of the backfilling and grading.

A manhole, and surroundings, several hundred yards east of the Can-Rad site was originally suspected of having sufficient contamination to require disposal since it connected into the main waste line from the Can-Rad facility. However, on lowering the Thyac probe into the manhole, no activity above the limits required for use by the general public could be detected. The highest reading along one side was ~ 0.5 mR/hr at 1 cm and the interior of the manhole

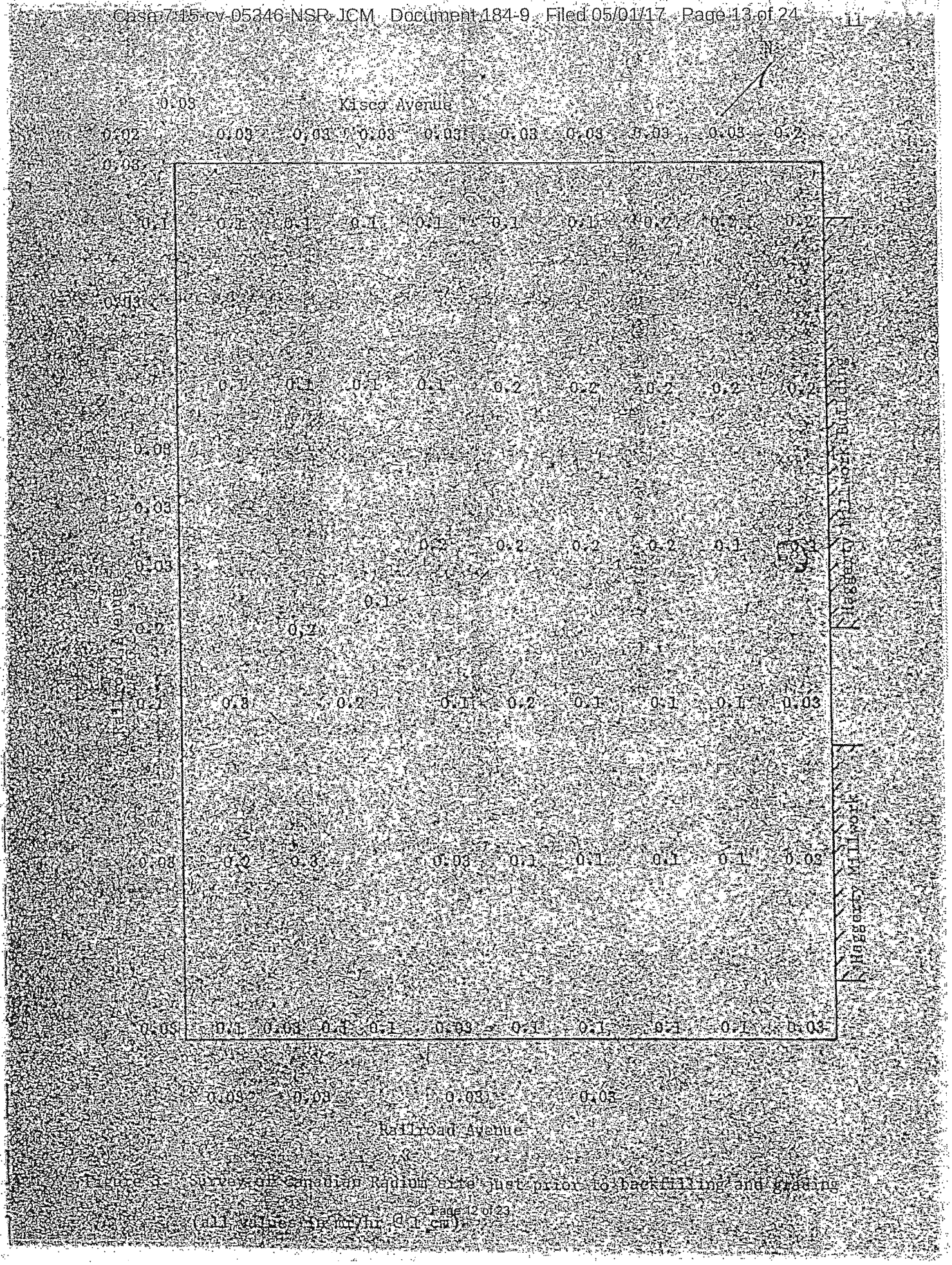

Figure 4- Survey of Canadian Radium site just prior to backfilling and grading (all values in mr/hr, 0.1 cm).

averaged ~ 0.1 mR/hr at 1 cm. The surroundings to the manhole were mostly loose mud and water heavily interspersed with solid hummocks of soil and grass over an area approximately 500 sq ft. These hummocks and the raised soil around the manhole were surveyed and six spots (each < 2 cm diam.) were found with dose rates 0.5-0.8 mR/hr at 1 cm. All other areas were < 0.2 mR/hr at 1 cm, with most at background. A survey with the Ludlum indicated no high level sources existed in the area. The total amount of radium left around the manhole was calculated to be comparable to the amount of radium naturally present in the soil that was to be used to backfill the area. In any case, the average for the entire area was well below the 0.2 mR/hr required for use by the general public.

All equipment was surveyed prior to release from the job. Only the wrecking ball required more than hosing for complete decontamination, and this only requiring a vigorous brushing with a wire-brush, Turco cleaner and water.

Kisco Avenue was resurveyed to Route 138 by walking the route with the Ludlum probe held at one foot above road level. All readings some distance from the Can-Rad site were identical with the background data previously obtained; those close in were actually lower than those for the original survey because of the removal of the facility.

On completion of backfilling and grading of the site, a final survey was made for record (Figure 4).

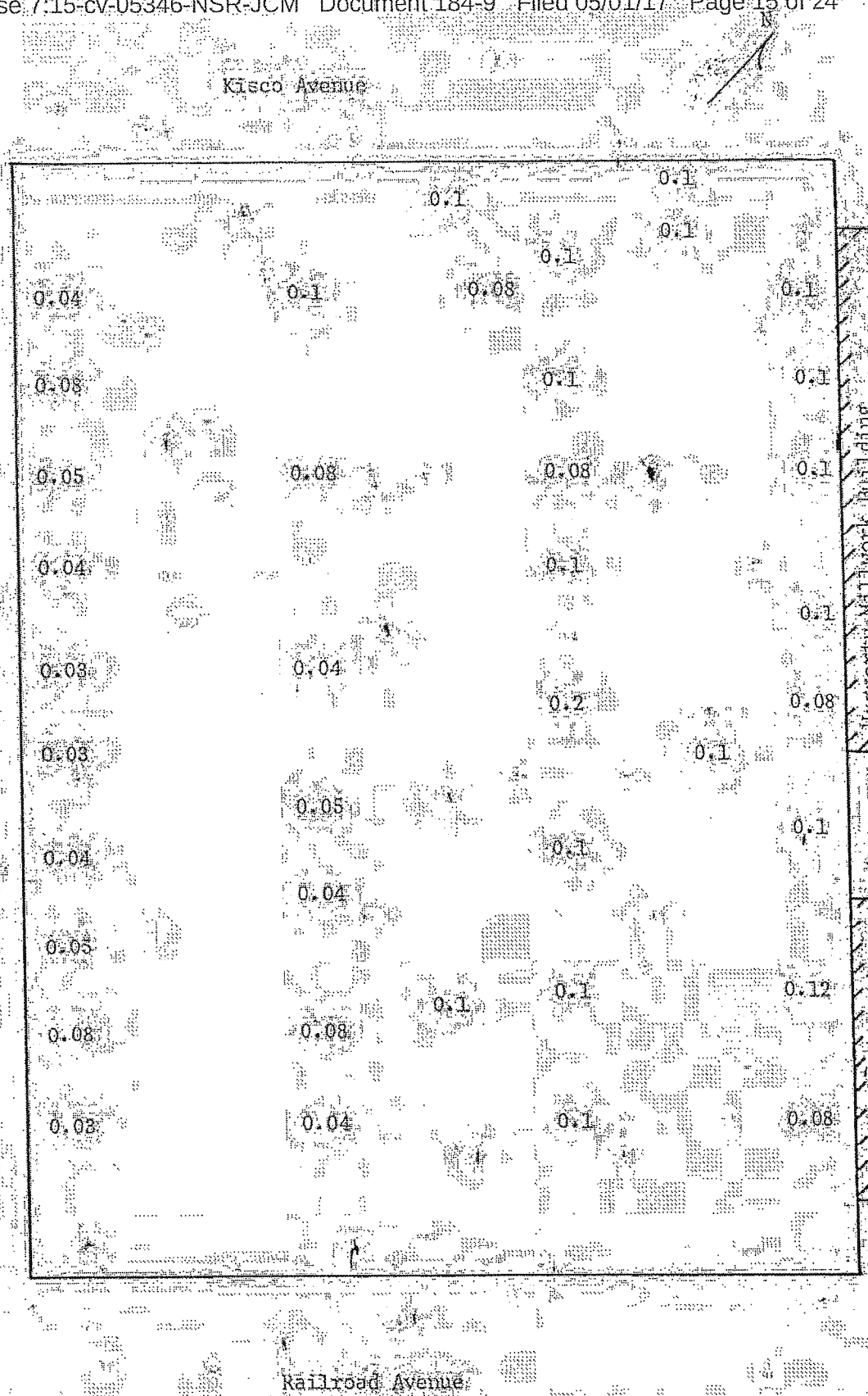

Figure 4. Survey of Canadian Radium site after backfilling and grading (all values in mr/hr @ 1 cm).

III. PERSONNEL PROTECTION

A. Precautions

All personnel, including the truck drivers, were required to wear one-piece coveralls, gloves and boots over their normal clothing. In addition, all workers on-site were required to wear face masks (American-Optical half-masks) throughout the operation. A change/wash room was provided and all personnel were monitored with the PAC-3G's each time they left the site. External personal clothing was monitored after the coveralls and boots were removed, no detectable activity ever being found on personal clothing. Occasionally a small amount of activity was found on the hands but was removed by washing with soap and water. The external coverings were left on-site each evening and were monitored by the ISOTOPES staff. Whenever the coveralls were found to be contaminated to levels one order of magnitude greater than levels allowable for release of personal clothing, they were washed by Standard Uniform Company prior to reuse.

The usual precautions against eating, drinking or smoking on-site were imposed. The specific instructions given each man are indicated in Appendix B. These instructions were carefully explained to each man before he started work. He was then required to sign a copy of the document to indicate full understanding of the precautions to be imposed.

Prior to allowing any new worker on-site, a urine sample and a one-liter breath sample were collected. All workers, including the truck drivers, were required to wear a film badge throughout the operation. Breathing-zone personnel air monitors (UNICO) were used on the air-hammer and crane operators during the demolition to insure that no undue levels of contamination were being created by dust. On completion of the job, breath and urine samples were again collected from each worker.

B. Results

1. Breathing zone monitors. All samples taken compared statistically with a background sample taken prior to start of demolition.

2. Film badges. All personnel badges showed MINIMAL dose except for John Tekin (30 mR) and Armen Sahagian (80 mR) of ISOTOPES who removed all the loose sources into the high level waste drum. These results were consistent with pocket dosimeter readings taken during operation.

3. Urinalysis. All urine samples were screened at ISOTOPES by evaporating 10 ml of the sample into a 2-inch planchet and counting in a Nuclear Measurements Corporation internal proportional counter. Since all samples were more than two orders of magnitude below the guide levels (1) for a single exposure, no further analyses were required (Table 1).

4. Radon-breath analysis. The results of the radon-breath analyses (Table 2) provide some very interesting information as to the efficacy of the personnel protection. The sample for this analysis is collected by having the person blow up a large balloon, collecting the breath from the balloon into a one-liter evacuated flask (all done in the field), then transferring the one-liter sample into a 1.6 liter ZnS(Ag) coated counting chamber (2) at ISOTOPES. Following a four-hour ingrowth period for radon-daughter equilibration, the sample is counted on RIDL Designer Series electronics using baseline discrimination to minimize background.

The MPB for radium of 0.1 μgm Ra results in radon-breath levels of 1 pCi/liter, and the "average" level for unexposed persons is roughly 0.06 pCi/liter (3). Most of the personnel showed levels statistically at this level or slightly below. Of greatest interest are the four showing measurable levels of radon in breath. In three of the four cases a decrease in body burden

TABLE 1. RESULTS FOR GROSS-ALPHA ANALYSES OF URINE SAMPLES

Employee	Gross-Alpha Activity (pCi/liter) Preoperational	Postoperational
Bisignano	< 3.4	< 4.3
Dileo		< 2.4
Eisenhower	< 2.4	< 1.8
Fulchino	< 1.5	< 3.5
Harcourt	< 2.7	< 2.3
Limato	< 3.7	< 3.1
Nino	< 3.7	< 3.2
Samarco	< 4.2	< 4.4
Stufano	< 2.4	< 3.2
Wiggins	< 2.7	< 2.4
Zaccari	< 5.8	< 5.0

TABLE 2. RESULTS FOR RADON-BREATH ANALYSES

Employee	Lung Radon Activity (pCi/liter) Preoperational	Postoperational
Bisignano	< 0.02	< 0.04
Dileo	< 0.05	< 0.08
Eisenhouer	< 0.04	< 0.02
Harcourt	0.08 ± 0.01	< 0.05
Limato	< 0.04	< 0.04
Nino	0.08 ± 0.02	0.08 ± 0.01
Samarco	0.08 ± 0.01	< 0.04
Stufano	< 0.07	0.03 ± 0.01
Wiggins	0.23 ± 0.04 (preoperational) 0.14 ± 0.04 (follow-up)	0.08 ± 0.03
Zaccari	< 0.02	< 0.04

occurs, the most marked being the results for Mr. Willie Wiggins, the air-hammer operator. Because Mr. Wiggins' preoperational sample was so high, a second sample was collected a week after he started work. This sample, and the post-operational sample, showed markedly decreasing breath-radon levels. The decrease can be related to the more extensive effort made to keep his face mask on at all times. Mr. Wiggins had just completed a job where he had been working in excessive soil and rock dust, but he preferred not to use the face mask because he found it too uncomfortable. However, on the Can-Rad job the "radioactivity" caused him enough concern that he did not violate the operational guidelines. As a result, the marked decrease in radon activity indicates a gradual clearing from the upper respiratory tract of the natural radium accumulated on the previous job. Similar, but less marked, trends for the others are ascribable to the same history.

G. Summary

The personnel monitoring data clearly indicates the minimal hazard presented by this demolition effort once the loose source material had been properly removed. It also tended to justify the choice made by ISOTOPES not to disturb the "borderline" case where the radium was firmly fixed in paint and/or concrete but exceeded the dumping limit of 1 mR/hr. Because the main area in question had a general smear of activity across its surface the integral effect on the probe was such that dose rate measurements on the survey meters did not decrease appreciably when the probe was lifted from one centimeter to one foot from the surface. Therefore, the "point source" specifications were not considered strictly applicable for this case. Since none of these contaminated areas exceeded 1.5 mR/hr and were mostly around the limit of 1 mR/hr, disruption of their integrity for the sake of the minor variation from specifications might have created a much more hazardous working situation. Also, the area involved (800 sq ft of floor

along the north wall) was such a small fraction of the total amount of debris, that no appreciable effect was expected to occur at the burial site, and indeed did not occur. In every case where steps were taken to insure personnel safety on the job in favor of preordained specifications, no hazard to the general populace ever appeared as a result.

IV. REFERENCES

(1) Nuclear Radiation Guide, Technical Documentary Report No. MRL-TDR-62-61 (November 1962). Prepared by Biomedical Laboratory, 6570th Aerospace Medical Research Laboratory, Aerospace Medical Division, Air Force Systems Command, Wright Patterson Air Force Base, Ohio.

(2) J. M. Matuszek, Health Physics 10, 607 (1964).

(3) Manual of Standard Procedures, NYO-4700 (1967). Edited by John H. Harley, Health and Safety Laboratory, U. S. Atomic Energy Commission, 376 Hudson Street, New York, New York 10014.

Appendix A

County of Westchester

DEPARTMENT OF HEALTH
County Office Building
White Plains, N. Y. 10601

COUNTY BOARD OF HEALTH
DONALD B. REED, M.D., PRES.
JAMES M. JONES, M.D., V. PRES.
JOHN J. VESCE, M.D.
LOUIS A. DRUSS
MISS VALERIA D. FOOT
LOUIS P. KURTIS
MRS. MARY McSWEENEY
EDWARD N. VETRANO
CLIFFORD T. WEIHMAN

WILLIAM A. BRUMFIELD, JR., M.D.
COMMISSIONER
JACK H. GOLDMAN, M.D.
FIRST DEPUTY

December 15, 1966

Mr. John M. Natuszek, Ph.D., Associate Manager
Scientific Services Department
Isotopes, Inc.
123 Woodland Avenue
Westwood, New Jersey 07675

Dear Dr. Natuszek:

Reference is made to our telephone conversation of December 7, 1966 relative to the material added to the demolition debris disposed of at the Croton Point Sanitary Landfill from the demolition of the former Canadian Radium and Uranium building in the Village of Mount Kisco.

Please be advised that the Westchester County Department of Health included the following items in this burial:

1. A wooden x-ray film box which had been used for storage of a lead pig containing a radium plaque. This box contained no detectable activity but was disposed of to prevent its further use for x-ray film.

2. A manila envelope containing several small bottles of chemicals obtained from a household in Westchester County. Beta activity of .02 mr/hr was detected on contact with the open top of one of these bottles. No detectable activity was obtained on the other vials.

3. Two metal cans obtained by this Department from the Canadian Radium and Uranium building several years ago for demonstration purposes. Unfortunately, the activity levels on these cans was marked on the wrapping and was disposed of with the debris. It is recalled, however, that the levels were below those specified for disposal of this material at West Valley, New York.

I trust the above is the information desired.

Very truly yours,

C. E. Weber, P.E.
Senior Sanitary Engineer
Division of Environmental Sanitation

CEW:T
cc: Office of Urban Renewal
Mt. Kisco

Appendix B

CODE OF PROCEDURES FOR RADIATION CONTROL AREA

Canadian Radium & Uranium Corp. Facility
69 Kisco Avenue
Mt. Kisco, N. Y.

1. There will be no eating or drinking in the Radiation Area. Smoking will be permitted by authorization of the health physicist. Smoking may be prohibited if the contamination levels in air and surface require this additional precaution.

2. Protective clothing, including shoe covering, face mask, head cover, lab coat and gloves if necessary, shall be worn as directed by the health physicist.

3. No item of any description shall be removed from the Radiation Area except as directed and cleared by the health physicist.

4. Before starting to work and at the completion of the job, the undersigned agrees to submit a urine and breath sample as directed by the health physicist.

5. Radiation monitoring equipment, such as film badges, pocket dosimeters and personnel air monitoring devices shall be worn as directed by the health physicist. If any of these devices are worn or misplaced, it will be immediately reported to the health physicist. The undersigned will not willfully expose any of these devices to radiation not received by the person assigned the device.

6. It is the understanding of the undersigned that he will be removed from work in the Radiation Area if he willfully disregards the above instructions.

I fully understand the above regulations and agree to abide by them.

(Signed) _____

Date _____

Company _____

Attachment B to
Access Order
(CERCLA-02-2019-2009)

Weston Solutions, Inc.
Suite 201
1090 King Georges Post Road
Edison, New Jersey 08837-3703
732-585-4400 • Fax: 732-225-7037
www.westonsolutions.com

The Trusted Integrator for Sustainable Solutions

REMOVAL SUPPORT TEAM 3
EPA CONTRACT EP-S2-14-01

June 11, 2018

Daniel Gaughan, On-Scene Coordinator
U.S. Environmental Protection Agency
Response & Prevention Branch
2890 Woodbridge Avenue
Edison, NJ 08837

EPA CONTRACT NO: EP-S2-14-01
TDD NO: TO-0010-0015
DC NO: RST3-04-D-0193
SUBJECT: DRAFT SITE-SPECIFIC UFP QUALITY ASSURANCE PROJECT PLAN CANADIAN RADIUM AND URANIUM CORP. SITE, MOUNT KISCO, WESTCHESTER COUNTY, NEW YORK

Dear Mr. Gaughan,

Enclosed please find the Draft Site-Specific UFP Quality Assurance Project Plan for the Removal Assessment to be performed at the Canadian Radium and Uranium Corp. Site (the Site) located in Mount Kisco, Westchester County, New York. This plan covers the ground radiological survey, radon and soil sampling activities to be conducted at the Site. The date of the Removal Assessment is yet to be determined.

If you have any questions or comments, please do not hesitate to contact me at [redacted].

Sincerely,

WESTON SOLUTIONS, INC.

Lionel Montanez
RST 3 Site Project Manager

Enclosure
cc: TDD File No.: TO-0010-0015

DRAFT SITE-SPECIFIC UFP QUALITY ASSURANCE PROJECT PLAN

CANADIAN RADIUM AND URANIUM CORP. SITE

Mount Kisco, Westchester County, New York

SSID No.: A23P
EPA ID No.: NYD987001468

DC No: RST3-04-D-0193
TDD No: TO-0010-0015
EPA Contract No: EP-S2-14-01

Prepared for:

U.S. Environmental Protection Agency, Region II
2890 Woodbridge Avenue
Edison, New Jersey 08837

Prepared by:

Removal Support Team 3
Weston Solutions, Inc.
Federal East Division
Edison, New Jersey 08837

June 2018

TABLE OF CONTENTS

CROSSWALK 1
QAPP Worksheet #1: Title and Approval Page 4
QAPP Worksheet #2: QAPP Identifying Information 5
QAPP Worksheet #3: Distribution List 6
QAPP Worksheet #4: Project Personnel Sign-Off Sheet 7
QAPP Worksheet #5: Project Organizational Chart 8
QAPP Worksheet #6: Communication Pathways 9
QAPP Worksheet #7: Personnel Responsibilities and Qualifications Table 9
QAPP Worksheet #8: Special Personnel Training Requirements Table 10
QAPP Worksheet #9: Project Scoping Session Participants Sheet 11
QAPP Worksheet #10: Problem Definition 13
QAPP Worksheet #11: Project Quality Objectives/Systematic Planning Process Statement 20
QAPP Worksheet #12: Measurement Performance Criteria Table 22
QAPP Worksheet #13: Secondary Data Criteria and Limitations Table 23
QAPP Worksheet #14: Summary of Project Tasks 24
QAPP Worksheet #15: Reference Limits and Evaluation Table 27
QAPP Worksheet #16: Project Schedule/Timeline Table 28
QAPP Worksheet #17: Sampling Design and Rationale 29
QAPP Worksheet #18: Sampling Locations and Methods/SOP Requirements Table 31
QAPP Worksheet #19: Analytical SOP Requirements Table 32
QAPP Worksheet #20: Field Quality Control Sample Summary Table 33
QAPP Worksheet #21: Project Sampling SOP References Table 34
QAPP Worksheet #22: Field Equipment Calibration, Maintenance, Testing, and Inspection Table 35
QAPP Worksheet #23: Analytical SOP References Table 36
QAPP Worksheet #24: Analytical Instrument Calibration Table 37
QAPP Worksheet #25: Analytical Instrument and Equipment Maintenance, Testing, and Inspection Table 38
QAPP Worksheet #26: Sample Handling System 39
QAPP Worksheet #27: Sample Custody Requirements 40
QAPP Worksheet #28: QC Samples Table 41
QAPP Worksheet #29: Project Documents and Records Table 42
QAPP Worksheet #30: Analytical Services Table 43
QAPP Worksheet #31: Planned Project Assessments Table 44
QAPP Worksheet #32: Assessment Findings and Corrective Action Responses 45
QAPP Worksheet #33: QA Management Reports Table 46
QAPP Worksheet #34: Verification (Step I) Process Table 47
QAPP Worksheet #35: Validation (Steps IIa and IIb) Process Table 48
QAPP Worksheet #36: Validation (Steps IIa and IIb) Summary Table 49
QAPP Worksheet #37: Usability Assessment 50

LIST OF ATTACHMENTS

Attachment A – Figure 1: Site Location Map
Figure 2: Area of Concern and Proposed Sample Location Map

Attachment B – EPA/SERAS SOP # 2001 – *General Field Sampling Guidelines*
EPA/SERAS SOP # 2006 – *Sample Equipment Decontamination*
EPA/SERAS SOP # 2012 – *Soil Sampling*
EPA/SERAS SOP # 2050 – *Geoprobe Operation*

Attachment C – Laboratory SOPs: To be determined

LIST OF ACRONYMS

ADR	Automated Data Review
ANSETS	Analytical Services Tracking System
AOC	Acknowledgment of Completion
ASTM	American Society for Testing and Materials
CEO	Chief Executive Officer
CERCLA	Comprehensive Environmental Response, Compensation and Liability Act
CLP	Contract Laboratory Program
CFM	Contract Financial Manager
CO	Contract Officer
COI	Conflict of Interest
COO	Chief Operations Officer
CRDL	Contract Required Detection Limit
CRTL	Core Response Team Leader
CRQL	Contract Required Quantitation Limit
CQLOSS	Corporate Quality Leadership and Operations Support Services
CWA	Clean Water Act
DCN	Document Control Number
DESA	Division of Environmental Science and Assessment
DI	Deionized Water
DPO	Deputy Project Officer
DQI	Data Quality Indicator
DQO	Data Quality Objective
EM	Equipment Manager
EDD	Electronic Data deliverable
ENVL	Environmental Unit Leader
EPA	Environmental Protection Agency
ERT	Environmental Response Team
FASTAC	Field and Analytical Services Teaming Advisory Committee
GC/ECD	Gas Chromatography/Electron Capture Detector
GC/MS	Gas Chromatography/Mass Spectrometry
HASP	Health and Safety Plan
HRS	Hazard Ranking System
HSO	Health and Safety Officer
ITM	Information Technology Manager
LEL	Lower Explosive Limit
MSA	Mine Safety Appliances
MS/MSD	Matrix Spike/Matrix Spike Duplicate
NELAC	National Environmental Laboratory Accreditation Conference
NELAP	National Environmental Laboratory Accreditation Program
NIOSH	National Institute for Occupational Safety and Health
NIST	National Institute of Standards and Technology
OSC	On-Scene Coordinator
OSHA	Occupational Safety and Health Administration

LIST OF ACRONYMS (Concluded)

OSWER	Office of Solid Waste and Emergency Response
PARCCS	Precision, Accuracy, Representativeness, Completeness, Comparability, Sensitivity
PAH	Polynuclear Aromatic Hydrocarbons
PCB	Polychlorinated Biphenyls
PIO	Public Information Officer
PM	Program Manager
PO	Project Officer
PRP	Potentially Responsible Party
PT	Proficiency Testing
QA	Quality Assurance
QAL	Quality Assurance Leader
QAPP	Quality Assurance Project Plan
QMP	Quality Management Plan
QA/QC	Quality Assurance/Quality Control
QC	Quality Control
RC	Readiness Coordinator
RCRA	Resource Conservation and Recovery Act
RPD	Relative Percent Difference
RSCC	Regional Sample Control Coordinator
RST	Removal Support Team
SARA	Superfund Amendments and Reauthorization Act
SEDD	Staged Electronic Data Deliverable
SERAS	Scientific, Engineering, Response and Analytical Services
SOP	Standard Operating Practice
SOW	Statement of Work
SPM	Site Project Manager
START	Superfund Technical Assessment and Response Team
STR	Sampling Trip Report
TAL	Target Analyte List
TCL	Total Compound List
TDD	Technical Direction Document
TDL	Technical Direction Letter
TO	Task Order
TQM	Total Quality Management
TSCA	Toxic Substances Control Act
UFP	Uniform Federal Policy
VOA	Volatile Organic Analysis

CROSSWALK

The following table provides a "cross-walk" between the QAPP elements outlined in the Uniform Federal Policy for Quality Assurance Project Plans (UFP-QAPP Manual), the necessary information, and the location of the information within the text document and corresponding QAPP Worksheet. Any QAPP elements and required information that are not applicable to the project are circled.

QAPP Element(s) and Corresponding Section(s) of UFP-QAPP Manual	Required Information	Crosswalk to QAPP Section	Crosswalk to QAPP Worksheet No.
Project Management and Objectives			
2.1 Title and Approval Page	- Title and Approval Page	Approval Page	1
2.2 Document Format and Table of Contents 2.2.1 Document Control Format 2.2.2 Document Control Numbering System 2.2.3 Table of Contents 2.2.4 QAPP Identifying Information	- Table of Contents - QAPP Identifying Information	TOC Approval Page	2
2.3 Distribution List and Project Personnel Sign-Off Sheet 2.3.1 Distribution List 2.3.2 Project Personnel Sign-Off Sheet	- Distribution List - Project Personnel Sign-Off Sheet	Approval Page	3 4
2.4 Project Organization 2.4.1 Project Organizational Chart 2.4.2 Communication Pathways 2.4.3 Personnel Responsibilities and Qualifications 2.4.4 Special Training Requirements and Certification	- Project Organizational Chart - Communication Pathways - Personnel Responsibilities and Qualifications - Special Personnel Training Requirements	2	5 6 7 8
2.5 Project Planning/Problem Definition 2.5.1 Project Planning (Scoping) 2.5.2 Problem Definition, Site History, and Background	- Project Planning Session Documentation (including Data Needs tables) - Project Scoping Session Participants Sheet - Problem Definition, Site History, and Background - Site Maps (historical and present)	1	9 10
2.6 Project Quality Objectives and Measurement Performance Criteria 2.6.1 Development of Project Quality Objectives Using the Systematic Planning Process 2.6.2 Measurement Performance Criteria	- Site-Specific PQOs - Measurement Performance Criteria	3	11 12
2.7 Secondary Data Evaluation	- Sources of Secondary Data and Information - Secondary Data Criteria and Limitations	1 2	13

QAPP Element(s) and Corresponding Section(s) of UFP-QAPP Manual	Required Information	Crosswalk to QAPP Section	Crosswalk to QAPP Worksheet No.
2.8 Project Overview and Schedule 2.8.1 Project Overview 2.8.2 Project Schedule	- Summary of Project Tasks - Reference Limits and Evaluation - Project Schedule/Timeline	4	14 15 16
Measurement/Data Acquisition			
3.1 Sampling Tasks 3.1.1 Sampling Process Design and Rationale 3.1.2 Sampling Procedures and Requirements 3.1.2.1 Sampling Collection Procedures 3.1.2.2 Sample Containers, Volume, and Preservation 3.1.2.3 Equipment/Sample Containers Cleaning and Decontamination Procedures 3.1.2.4 Field Equipment Calibration, Maintenance, Testing, and Inspection Procedures 3.1.2.5 Supply Inspection and Acceptance Procedures 3.1.2.6 Field Documentation Procedures	- Sampling Design and Rationale - Sample Location Map - Sampling Locations and Methods/SOP Requirements - Analytical Methods/SOP Requirements - Field Quality Control Sample Summary - Sampling SOPs - Project Sampling SOP References - Field Equipment Calibration, Maintenance, Testing, and Inspection	5	17 18 19 20 21 22
3.2 Analytical Tasks 3.2.1 Analytical SOPs 3.2.2 Analytical Instrument Calibration Procedures 3.2.3 Analytical Instrument and Equipment Maintenance, Testing, and Inspection Procedures 3.2.4 Analytical Supply Inspection and Acceptance Procedures	- Analytical SOPs - Analytical SOP References - Analytical Instrument Calibration - Analytical Instrument and Equipment Maintenance, Testing, and Inspection	6	23 24 25
3.3 Sample Collection Documentation, Handling, Tracking, and Custody Procedures 3.3.1 Sample Collection Documentation 3.3.2 Sample Handling and Tracking System 3.3.3 Sample Custody	- Sample Collection Documentation Handling, Tracking, and Custody SOPs - Sample Container Identification - Sample Handling Flow Diagram - Example Chain-of-Custody Form and Seal	7	26 27
3.4 Quality Control Samples 3.4.1 Sampling Quality Control Samples 3.4.2 Analytical Quality Control Samples	- QC Samples - Screening/Confirmatory Analysis Decision Tree	5	28

QAPP Element(s) and Corresponding Section(s) of UFP-QAPP Manual	Required Information	Crosswalk to QAPP Section	Crosswalk to QAPP Worksheet No.
3.5 Data Management Tasks 3.5.1 Project Documentation and Records 3.5.2 Data Package Deliverables 3.5.3 Data Reporting Formats 3.5.4 Data Handling and Management 3.5.5 Data Tracking and Control	- Project Documents and Records - Analytical Services - Data Management SOPs	6	29 30
Assessment/Oversight			
4.1 Assessments and Response Actions 4.1.1 Planned Assessments 4.1.2 Assessment Findings and Corrective Action Responses	- Assessments and Response Actions - Planned Project Assessments - Audit Checklists - Assessment Findings and Corrective Action Responses	8	31 32
4.2 QA Management Reports	- QA Management Reports		33
4.3 Final Project Report	- Final Report(s)		
Data Review			
5.1 Overview			
5.2 Data Review Steps 5.2.1 Step I: Verification 5.2.2 Step II: Validation 5.2.2.1 Step IIa Validation Activities 5.2.2.2 Step IIb Validation Activities 5.2.3 Step III: Usability Assessment 5.2.3.1 Data Limitations and Actions from Usability Assessment 5.2.3.2 Activities	- Verification (Step I) Process - Validation (Steps IIa and IIb) Process - Validation (Steps IIa and IIb) Summary - Usability Assessment	9	34 35 36 37

QAPP Worksheet #1: Title and Approval Page

Title: Site-Specific UFP Quality Assurance Project Plan
Site Name/Project Name: Canadian Radium and Uranium Corp. Site
Site Location: Mount Kisco, Westchester County, New York
Revision Number: 00
Revision Date: Not Applicable

Weston Solutions, Inc.
Lead Organization

Ashley Gutierrez
Weston Solutions, Inc.
1090 King Georges Post Road, Suite 201
Edison, NJ 08837
Email: [redacted]

Preparer's Name and Organizational Affiliation

11 June 2018
Preparation Date (Day/Month/Year)

Site Project Manager: _____
Signature

Bernard Nwosu/Weston Solutions, Inc.
Printed Name/Organization/Date

QA Officer/Technical Reviewer: _____
Signature

Smita Sumbaly/Weston Solution, Inc.
Printed Name/Organization/Date

EPA, Region II On-Scene Coordinator (OSC): _____
Signature

Daniel Gaughan/EPA, Region II
Printed Name/Organization/Date

EPA, Region II Quality Assurance Officer (QAO): _____
Signature

Printed Name/Organization/Date

Document Control Number: RST3-04-D-0193

QAPP Worksheet #2: QAPP Identifying Information

Title: Site-Specific UFP Quality Assurance Project Plan
Site Name/Project Name: Canadian Radium and Uranium Corp. Site
Site Location: Mount Kisco, Westchester County, New York
Operable Unit: 00
Revision Number: 00
Revision Date: Not Applicable

1. **Identify guidance used to prepare QAPP:**
   Uniform Federal Policy for Quality Assurance Project Plans. Refer to EPA Methods and Laboratory SOPs.

2. **Identify regulatory program:** EPA, Region II

3. **Identify approval entity:** EPA, Region II

4. **Indicate whether the QAPP is a generic or a site-specific QAPP.**

5. **List dates of scoping sessions that were held:** May 21, 2018 and May 29, 2018

6. **List dates and titles of QAPP documents written for previous site work, if applicable:**

   Site-Specific UFP Quality Assurance Project Plan, July 31, 2015, DCN#: RST3-02-D-0010

   Site-Specific UFP Quality Assurance Project Plan, October 7, 2015, DCN#: RST3-02-D-0095

   Site-Specific UFP Quality Assurance Project Plan, April 1, 2016, DCN#: RST3-02-D-0239

   Site-Specific UFP Quality Assurance Project Plan, December 1, 2016, DCN#: RST3-03-D-0123

7. **List organizational partners (stakeholders) and connection with lead organization:**

   None

8. **List data users:** EPA, Region II (see Worksheet #4 for individuals)

9. **If any required QAPP elements and required information are not applicable to the project, then provide an explanation for their exclusion below:**

10. **Document Control Number:** RST3-04-D-0193

QAPP Worksheet #3: Distribution List

[List those entities to which copies of the approved site-specific QAPP, subsequent QAPP revisions, addenda, and amendments are sent]

QAPP Recipient	Title	Organization	Telephone Number	Fax Number	E-mail Address	Document Control Number
Daniel Gaughan	On-Scene Coordinator	EPA, Region II	(732) 906-6984	(732) 321-4350	Gaughan.Daniel@epa.gov	RST3-04-D-0193
Lionel Montanez	Site Project Manager	Weston Solutions, Inc., RST 3	[redacted]	[redacted]	[redacted]	RST3-04-D-0193
Ashley Gutierrez	RST 3 Field Personnel	Weston Solutions, Inc., RST 3	[redacted]	[redacted]	[redacted]	RST3-04-D-0193
Bernard Nwosu	Health & Safety Officer	Weston Solutions, Inc., RST 3	[redacted]	[redacted]	[redacted]	RST3-04-D-0193
Smita Sumbaly	QA Officer	Weston Solutions, Inc., RST 3	[redacted]	[redacted]	[redacted]	RST3-04-D-0193
Site TDD File	RST 3 Site TDD File	Weston Solutions, Inc., RST 3	Not Applicable	Not Applicable	Not Applicable	RST3-04-D-0193

Case 7:19-cv-03558-CS Document 7-2 Filed 04/22/19 Page 45 of 54

ED_006395_00002555-00071

QAPP Worksheet #4: Project Personnel Sign-Off Sheet

[Copies of this form signed by key project personnel from each organization to indicate that they have read the applicable sections of the site-specific QAPP and will perform the tasks as described; add additional sheets as required. Ask each organization to forward signed sheets to the central project file.]

Organization: Weston Solutions, Inc., RST 3

Project Personnel	Title	Telephone Number	Signature	Date QAPP Read
Daniel Gaughan	EPA OSC	(732) 906-6984		
Lionel Montanez	Site Project Manager, RST 3	[redacted]		
Smita Sumbaly	QAO, RST 3	[redacted]		
Bernard Nwosu	Operations Lead / HSO, RST 3	[redacted]		
Ashley Gutierrez	Field Personnel, RST 3	[redacted]		

QAPP Worksheet #5: Project Organizational Chart

Identify reporting relationship between all organizations involved in the project, including the lead organization and all contractor and subcontractor organizations. Identify the organizations providing field sampling, on-site and off-site analysis, and data review services, including the names and telephone numbers of all project managers, project team members, and/or project contacts for each organization.

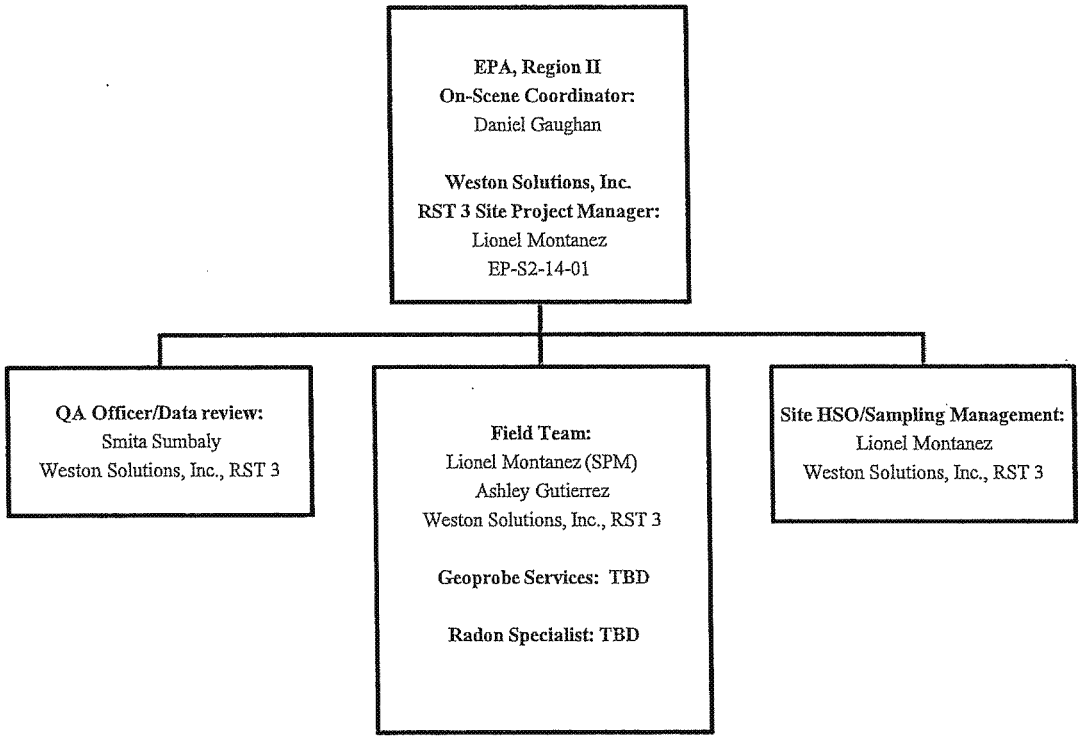

Acronyms:

EPA: Environmental Protection Agency
RST 3: Removal Support Team 3
QA: Quality Assurance
SPM: Site Project Manager
HSO: Health & Safety Officer

QAPP Worksheet #6: Communication Pathways

Communication Drivers	Responsible Entity	Name	Phone Number	Procedure
Point of contact with EPA OSC	Site Project Manager, Weston Solutions, Inc., RST 3	Lionel Montanez, SPM	[redacted]	All technical, QA and decision-making matters in regard to the project (verbal, written or electronic)
Adjustments to QAPP	Site Project Manager, Weston Solutions, Inc., RST 3	Lionel Montanez, SPM	[redacted]	QAPP approval dialogue
Health and Safety On-Site Meeting	HSO, Weston Solutions, Inc., RST 3	Lionel Montanez, SPM	[redacted]	Explain/Review Site hazards, personnel protective equipment, hospital location, etc.

EPA: Environmental Protection Agency
OSC: On-Scene Coordinator
QAPP: Quality Assurance Project Plan
RST 3: Removal Support Team 3
SPM: Site Project Manager
HSO: Health and Safety Officer
QA: Quality Assurance

QAPP Worksheet #7: Personnel Responsibilities and Qualifications Table

Name	Title	Organizational Affiliation	Responsibilities	Education and Experience Qualifications
Daniel Gaughan	EPA On-Scene Coordinator	EPA, Region II	All project coordination, direction and decision making.	NA
Lionel Montanez	SPM & HSO, RST 3	Weston Solutions, Inc.	Sample event management, H&S, radiological survey and sample collection/management	10+ Years*
Ashley Gutierrez	Field Personnel, RST 3	Weston Solutions, Inc.	Sample collection/management	

*All RST 3 members, including subcontractor's resumes are in possession of RST 3 Program Manager, EPA Project Officer, and Contracting officers.

Case 7:19-cv-03558-CS Document 7-2 Filed 04/22/19 Page 48 of 54

ED_006395_00002555-00074

QAPP Worksheet #8: Special Personnel Training Requirements Table

Project Function	Specialized Training By Title or Description of Course	Training Provider	Training Date	Personnel / Groups Receiving Training	Personnel Titles / Organizational Affiliation	Location of Training Records / Certificates[1]
[Specify location of training records and certificates for samplers]						
QAPP Training	This training is presented to all RST 3 personnel to introduce the provisions, requirements, and responsibilities detailed in the UFP QAPP. The training presents the relationship between the site-specific QA Project Plans (QAPPs), SOPs, work plans, and the Generic QAPP. QAPP refresher training will be presented to all employees following a major QAPP revision.	Weston Solutions, Inc., QAO	As needed	All RST 3 field personnel upon initial employment and as refresher training	Weston Solutions, Inc.	Weston Solutions, Inc., EHS Database
Health and Safety Training	Health and safety training will be provided to ensure compliance with Occupational Safety and Health Administration (OSHA) as established in 29 CFR 1910.120.	Weston Solutions, Inc., HSO	Yearly at a minimum	All Employees upon initial employment and as refresher training every year	Weston Solutions, Inc.	Weston Solutions, Inc., EHS Database
Others	Scribe, ICS 100 and 200, and Air Monitoring Equipment Trainings provided to all employees	Weston Solutions, Inc., QAO/Group Leader's	Upon initial employment and as needed			
	Dangerous Goods Shipping	Weston Solutions, Inc., HSO	Every 2 years			

All team members are trained in the concepts and procedures in recognizing opportunities for continual improvement, and the approaches required to improve procedures while maintaining conformance with legal, technical, and contractual obligations.
[1]All RST 3 members, including subcontractor's certifications are in possession of RST 3 HSO.

Case 7:19-cv-03558-CS Document 7-2 Filed 04/22/19 Page 49 of 54

ED_006395_00002555-00075

QAPP Worksheet #9: Project Scoping Session Participants Sheet

Site Name/Project Name: Canadian Radium and Uranium Corp. Site
Site Location: Mount Kisco, Westchester County, New York
Operable Unit: 00
Date of Sessions: May 21, 2018 and May 29, 2018
Scoping Session Purpose: To discuss questions, comments, and assumptions regarding technical issues involved with the sampling activities.

Name	Title	Affiliation	Phone #	E-mail Address	*Project Role
Daniel Gaughan	EPA OSC	EPA, Region II	(732) 321-4350	Gaughan.Daniel@epa.gov	OSC
Lionel Montanez	SPM, RST 3	Weston Solutions, Inc., RST 3	[redacted]	[redacted]	SPM
Bernard Nwosu	HSO, RST 3	Weston Solutions, Inc., RST 3	[redacted]	[redacted]	Health & Safety

Comments/Decisions: RST 3 has been tasked by EPA with providing Removal Assessment support for a non-intrusive ground radiological survey, radon and soil sampling at the 125 Kisco Avenue property, designated as Property P008, and located adjacent to and in the vicinity of the Canadian Radium and Uranium Corp. Site (the Site). The objective of the survey and sampling events is to verify if there are radiation source areas at Property C008 which may be attributed to the Site. The radiological survey will be performed using a Ludlum-2241 and a NaI 3x3 scintillator. Up to 15 radon samples will be collected by RST 3-procured, National Radon Proficiency Program (NRPP)-certified, company from frequently occupied spaces in the buildings at Property C008. The NRPP-certified company will be responsible for placing the canisters, picking up the canisters, and delivering to the assigned laboratory for radon analysis. Passive activated charcoal canisters will be utilized to conduct short-term radon sampling tests that will last a minimum of approximately 72 hours. Following the completion of the radiological survey, locations indicating the highest gamma screening measurements will be selected for soil sampling. Prior to mobilizing to the Site, RST 3 will contact Dig Safely New York to conducted subsurface utilities mark-out in order to clear the locations within the right-of-way (ROW) areas. RST 3 drilling subcontractor will conduct subsurface utilities mark-out around all the proposed soil sampling locations prior to advancing soil borings with a Geoprobe®. Up to 10 soil borings will be advanced at the selected locations to depths of 8 feet below ground surface (bgs). The soil core extracted from each soil sample location will be screened at every 6-inch interval for gamma radiation using the Ludlum-2241 and a sodium iodide (NaI) 3x3 scintillator. At least two soil samples will be collected from each soil core at intervals which exhibit the highest gamma readings and/or where a fill layer is observed and/or at the discretion of the EPA On-Scene Coordinator (OSC). The boreholes will be backfilled in reverse order with the extracted soil in the cores, tamped down, and sealed with topsoil (for sample locations in bare soil/grassy

QAPP Worksheet #9: Project Scoping Session Participants Sheet (continued)

Comments/Decisions Concluded:	areas) or asphalt patch (for sample locations on asphalt-paved areas). Up to 30 soil samples will be collected during the sampling event. One rinsate blank will be collected at the end of each sampling day to demonstrate adequacy of decontamination of non-dedicated sampling equipment (*i.e.* Geoprobe® cutting shoe). The soil samples will be submitted to the assigned laboratory for the analysis (to be determined). The rinsate samples will be submitted to the assigned laboratory for the analysis (to be determined). Site activities will be documented with digital photographs and noted in the Site field logbook. Sample management, including collecting and containerizing samples, entering of sample information into the EPA Scribe database, generating chain of custody record, and shipping soil samples to the assigned laboratory will be completed by RST 3. The date of the Removal Assessment is yet to be determined.
Consensus Decisions:	To be determined.
Action Items:	To be determined.

QAPP Worksheet #10: Problem Definition

PROBLEM DEFINITION

Radiological survey data from prior site investigations conducted by Weston Solutions Inc., Site Assessment Team (SAT) and Removal Assessments conducted by RST 3 identified elevated levels of gamma radiation at locations throughout the Site. In addition, radon sampling events conducted in living spaces of buildings associated with the Site indicated elevated levels of radon above the EPA Site-Specific Action Level of 4.0 picocuries per liter (pCi/L). Furthermore, analytical results from soil sampling events conducted as part of prior site investigation and Removal Assessment events indicated concentrations of Ra-226 above the EPA Site-Specific Action Level of 2.52 picocuries per gram (pCi/g) in soil samples respectively collected by SAT and RST 3 from locations throughout the Site. Based on these findings, EPA is conducting a Removal Assessment event involving a ground radiological survey, radon and soil sampling at Property C008 located adjacent to and in the vicinity of the Site. The objective of the Removal Assessment is to verify if there are radiation source areas at Property C008 which may be attributed to the Site. The radon samples will be collected by RST 3-procured, NRPP-certified, company from frequently occupied spaces in the buildings at Property C008 and submitted to the assigned laboratory for radon analysis. The results of the radiological survey will be used to determine areas on the property with elevated radioactivity measurements from which soil samples will be collected and submitted to the assigned laboratory to analyses.

SITE HISTORY/CONDITIONS

The former Canadian Radium and Uranium (CRU) facility is located to the east of Kisco Avenue and to the west of railroad tracks in the Village of Mount Kisco, Westchester County, New York, in a primarily suburban residential and commercial area. The historic property on the Site is 2.72 acres, and includes the 103 Kisco Avenue property currently occupied by a landscaping business, and the 105 Kisco Avenue property previously occupied by a stone, masonry, and landscaping business which is currently closed and now being utilized to park cars from a local dealership. The Site is bounded by Kisco Avenue to the west, southwest, and northwest; railroad tracks to the south, east, and northeast; and a large, privately-owned warehouse to the north and northeast.

From 1943 until approximately 1966, the CRU facility operations included the recovery of uranium and other radioactive elements from uranium-bearing sludge, old instrumentation, and watch dials. This work at the CRU facility is possibly associated with the federal government's Manhattan Engineering District (Manhattan Project). From 1943 to the 1950s, the primary product of the CRU facility was uranium; subsequently, radium became the principal product until the facility's closure. According to a Village of Mount Kisco memorandum, in 1957, CRU pleaded guilty to charges of allowing three employees to be overexposed to radiation. From March 5, 1958, until sometime after May 19, 1961, decontamination procedures and expectations were established for the CRU facility.

In November and December 1966, the facility buildings (a two-story concrete block building and two smaller one-story concrete block buildings) were decontaminated and demolished. Removal of radioactive dirt to a depth of 12 inches was required on the CRU premises.

QAPP Worksheet #10: Problem Definition (Continued)

The most contaminated demolition materials were disposed of by Nuclear Diagnostic Laboratories located in Peekskill, New York, while the less contaminated materials were disposed of at Croton Point Sanitary Landfill located in Croton-on-Hudson, New York. After decontamination and demolition, a post-operation survey was conducted by Isotopes, Inc. Two locations on the Haggerty Millwork wall, which originally shared a wall with the former CRU facility that was demolished during the 1966 decontamination and demolition process, were found above specifications. One contaminated location was removed by chiseling out the masonry of a wall. The second was a result of tailings from a leaking waste drum which CRU had stored on the second floor fire escape. Since contamination was low here, the area was sealed with 1 to 2 inches of mortar. Railroad Avenue was constructed where the main CRU building once stood and was put in place by the urban renewal efforts in the area. Between 1964 (pre-decontamination/demolition) and 1971 (post-decontamination/demolition), the building layout of the former CRU facility completely changed, and it is believed that none of the original CRU facility buildings remained after the year 1971.

On April 5, 1979, a local newspaper reported the 1957 death of the CRU plant manager due to leukemia from high radioactivity levels found in his body. On April 20, 1979, a survey was performed by the Assistant Commissioner of Health for Environmental Quality, Westchester Department of Health. Based on the surveys, the highest dose rates were found in a small portion of a locked, chain-link fenced area south of the old wood freight station on Railroad Avenue and east of the L. B. Richard's Lumber yard (*i.e.*, an area located adjacent to the railroad). All other elevated dose rates were found in areas covered by soil and vegetative growth. The 1979 investigation reported that the high readings were obtained from an area covering approximately one square yard (sq. yd.) of the property in an area not used by the public. In addition, the report indicated that the dose rates found did not pose a public health hazard to persons passing the fenced area, to persons working in buildings adjacent to the area, or to persons living across the railroad tracks to the east.

In a memorandum dated February 7, 1980, the Westchester County Health Department described investigation findings in more detail. The area in question was approximately 78 feet by 60 feet, enclosed by a chain-link fence located between the railroad tracks and a concrete paved area. The most significant contaminated area was a strip 15 feet by 5 feet, containing two separate "hot spots". A surface reading using an alpha probe survey meter measured 50 disintegrations per minute (dpm). Elevated readings several times above background were reported for an area extending about 50 feet south from the chain-link fence. The memorandum stated that the origin of this contamination was unknown and that it was not discovered in previous surveys.

In September 1993, the Bureau of Environmental Radiation Protection of the New York State Department of Health (NYSDOH) completed a survey of the Site; indoor radon measurements were collected (*i.e.*, office, show room, storage/sale floor) which documented a maximum concentration of 9.8 pCi/L, and the average of the different detectors was about 8.1 pCi/L. The NYSDOH also identified two outdoor areas where presence of radioactive materials were indicated at the back of Richard's Lumber, and the road that runs next to the railroad tracks and

QAPP Worksheet #10: Problem Definition (Continued)

adjacent to a fence post inside the fenced portion of what appeared to be Richard's Lumber property on the south side of Railroad Avenue.

In 1994, the U.S. Environmental Protection Agency (EPA) conducted an on-site inspection to measure radon levels, collect air and soil samples, and measure radiation exposure rates. The purpose of the investigation was to determine if conditions required immediate action and if the Site was eligible for long-term remediation under the federal Superfund Program. Elevated exposure rate measurements were documented on both the northern (10–700 microroentgens per hour [μR/hr]) and southern (10–240 μR/hr) portions of the Site. Radium-226 (Ra-226) concentrations in soil samples taken from the top 1.5 feet ranged from 3 to 150 picocuries per gram (pCi/g). All of the radon measurements were below EPA's guideline (*i.e.*, 4 pCi/L) and the air samples collected at the Site did not indicate any radioactive contamination.

In July 1998, a complete radiological survey of the Village of Mt. Kisco and Richard's Lumber (former CRU) was conducted by the New York State Department of Environmental Conservation (NYSDEC). The property owned by the Village of Mount Kisco (103 Kisco Avenue) was found to have contamination over one large unpaved area [approximately 4,000 to 5,000 square feet (ft^2)] and a few smaller areas. The 1998 report stated that on the Mt. Kisco property, the highest concentrations of radium observed were a few hundred pCi/g and that most of the contamination was in the top 1 foot of soil. The report stated that the distribution suggests that uranium-containing material was placed on the surface and then the area was leveled. A new road (Railroad Avenue) had been built where the CRU facility once stood; soil sampling completed near the road showed elevated concentration of radium a few feet below the surface. The NYSDEC reported that the distribution of radioactive material near the road appeared to be consistent with movement of soil as part of the building demolition and subsequent construction of the road. Sampling beneath the road surface was not performed. There is no documentation of shielding or other control measures implemented on the 103 Kisco Avenue property, though current conditions suggest that the property had been recently paved with asphalt (of an unknown thickness) or other cover materials.

The 1998 report further stated that the survey of the Richard's Lumber (105 Kisco Avenue) property indicated that radioactive materials were present under the parking lot, but no samples were taken beneath the asphalt. The highest concentration of radium at the Site was found just north of Railroad Avenue (approximately 6,000 pCi/g). A large part of the main outside storage area was reported to be contaminated with radium near the surface as well as within some soil profiles to depths of approximately 4 feet. Survey data suggested that the contamination stopped abruptly at the edges of the paved areas. Railroad Avenue showed count rates that were lower than background soils; NYSDEC attributed these results to absorption by the road surface material (*i.e.*, shielding). The July 1998 report indicated that radiation doses to workers or visitors to the Site as it was being used at the time were not significant. The Site location where the dose rate was highest was a small area near Richard's Lumber, just north of Railroad Avenue. Time spent at this location was small; therefore, the accumulated dose was also estimated to be small. The July 1998 report suggested that significant radium contamination was present on both Mt. Kisco

EXHIBIT B2

QAPP Worksheet #10: Problem Definition (Continued)

and Richard's Lumber properties. The NYSDEC did not consider the Site to be fully characterized at the completion of the survey.

In September 2013, Weston Solutions, Inc., Site Assessment Team (SAT), performed an on-site reconnaissance and gamma radiation screening of the historic CRU property and other suspected areas of contamination. Background readings taken north and northeast of the Site in the ROW area alongside Kisco Avenue showed background gamma radiation levels of approximately 7,500 counts per minute (cpm). The highest reading of 73,637 cpm was located on the 105 Kisco Avenue property. Most readings were below 2 times (2x) background. There were three areas with readings that exceeded 2x background, ranging from 30,000 cpm to 73,637 cpm. All three areas above 2x background were located in the back portion of the 105 Kisco Avenue property, east of the historic CRU facility. No signs of ground discoloration were observed.

In November 2013, SAT advanced eight boreholes to depths of 10 feet at the Site for gamma screening and soil sample collection. Using a gamma scintillation meter (Ludlum 2221 Scaler Ratemeter), field gamma screening data collected during the sampling event documented the gamma exposure rates at 6-inch depth intervals vertically down each sample location borehole. The soil samples collected represented the highest levels of gamma radiation recorded for each borehole. The soil samples were analyzed for isotopic thorium (thorium-228, thorium-230 and thorium-232), isotopic uranium (uranium-233/234, uranium-235/236 and uranium-238), Ra-226, and Ra-228. Analytical results from the sampling effort suggested that there was measureable residual contamination remaining at the Site.

In August 2015, EPA and Weston Solutions, Inc., Removal Support Team 3 (RST 3) conducted an extensive Removal Assessment event at the Site, which included a ground radiological survey, radon and soil sampling at the Metropolitan Transit Authority (MTA), Milepost 136, 103 Kisco Avenue (Property C001), Hickory Homes and Properties, Inc., 103 Kisco Avenue (Property C002), and 105 Kisco Avenue (Property C003) which was occupied at the time by New York Stone and Building Supply. Ground radiological survey and soil sampling was conducted at an off-site background location (comprising a strip mall), 145-159 Kisco Avenue (Property C004). Background gamma readings were taken at the off-site background location using Ludlum-2241 equipped with a sodium iodide (NaI) 2x2 scintillator, fluke photoionization chamber (FPIC), and high pressure ion chamber (HPIC). Background gamma readings taken with each instrument were as follows: Ludlum-2241 (7,500 - 9,500 cpm), FPIC (9 - 12 μR/hr at waist height and 11 - 13 μR/hr at contact), and HPIC (8.9 μR/hr). Gamma radiation measurements collected with the Ludlum-2241 were more than 2x background at six of the 11 soil sampling locations selected throughout the Site, with values ranging from 20,000 to 180,000 cpm. At Property C003, above-background gamma readings (12,000 to 15,000 cpm) were observed in the southeast corner of the warehouse located northeast on the property. Gamma measurements collected with the FPIC indicated above-background values ranging from 9 to 15 μR/hr at waist level and 14 to 51 μR/hr at contact in the Electrical Room of the main building, and from 14 to 16 μR/hr at waist level and 9 to 15 μR/hr at contact in the southeast corner of the warehouse located northeast on the property. Gamma measurements collected with the HPIC indicated above-background value of 14 μR/hr in the Electrical Room of Property C003 and at six of the 11 soil sampling locations throughout the

QAPP Worksheet #10: Problem Definition (Continued)

Site, with values ranging from 14.6 to 36 µR/hr. Radon/thoron measurements collected with RAD7 radon/thoron detectors did not indicate any elevated readings in exterior on-site locations.

On August 3 through 7, 2015, RST 3 procured the services of a National Radon Proficiency Program (NRPP)-certified company to conducted pre-mitigation radon sampling in all the on-site buildings at Properties C001 through C003. Passive activated charcoal canisters (radon canisters) were used to conduct short-term radon sampling tests that lasted a minimum of approximately 72 hours. Radon testing locations were focused on frequently occupied spaces in each on-site building. Bathrooms, kitchens, utility closets, and hallways were not tested to avoid biased results. Analytical results were compared with EPA Site-Specific Action Level of 4.0 pCi/L for radon. Based on the analytical results, radon concentrations did not exceed the EPA Site-Specific Action Level in any living spaces sampled at Properties C001 and C002. However, in Property C003, analytical results indicated radon concentrations above the EPA Site-Specific Action Level in 11 of the 13 samples, including one duplicate, collected from the main building, with concentrations ranging from 0.6 to 19.5 pCi/L. In addition, analytical results exceeded the EPA Site-Specific Action Level in two samples collected from the southeast corner of the warehouse located on the far northeast portion of Property C003, with concentration ranging from 2.6 to 5.2 pCi/L. Based on the analytical results from the August 2015 radon sampling event, in October 2015, a radon mitigation system was installed in the main building of Property C003 by the owners, following which a post-remedial radon sampling event was conducted by EPA and RST 3. Analytical results indicated radon concentrations below the EPA Site-Specific Action Level throughout the living spaces in the main building of Property C003.

During the August 2015 event, RST 3 collected a total of 13 soil samples, including two field duplicates, from 11 soil borings advanced to depths 4 feet bgs throughout the Site. Soil samples were collected from the interval exhibiting the highest level of gamma radiation (based on Ludlum-2241 screening data) and/or where a fill layer was observed and/or at the discretion of the EPA OSC. The sampling event was conducted in order to verify the presence of residual contamination and potential releases of radiation-containing material in soil associated with the former CRU facility. The soil samples were submitted for laboratory analyses of isotopic thorium, isotopic uranium, and other alpha emitting actinides via alpha spectroscopy Health and Safety Laboratory (HASL)-300 Method A-01-R; Ra-226 (21-day ingrowth), Ra-228, and other gamma emitting radioisotopes via gamma spectroscopy EPA Method GA-01-R; and target analyte (TAL) metals, including mercury. Analytical results indicated that concentrations of Ra-226 exceeded the calculated EPA Site-Specific Action Level (provided in August 2015) of 4.06 pCi/g in two of the four soil samples collected from Property C002. Exceedance of Ra-226 in Property C002 was highest at 0 to 36 inches bgs with a concentration of 10.4 J (estimated concentration) pCi/g. Ra-226 was also detected above the EPA Site-Specific Action Level in all four soil samples, including one field duplicate, collected from Property C003. Exceedance of Ra-226 was highest at 0 to 24 inches bgs with a concentration of 129 J pCi/g. Lead concentration was above the EPA Removal Management Level (RML) of 400 milligrams per kilogram (mg/kg) in one soil sample with a concentration of 510 mg/kg. Although no Site-Specific Action Level was provided by EPA for the aqueous (rinsate) samples, based on the analytical results, radioisotope concentrations were generally, not detected.

QAPP Worksheet #10: Problem Definition (Continued)

In April 2016, RST 3 collected a total of 103 soil samples, including five field duplicates, from 20 soil borings at every 6-inch interval up to 4 feet bgs in 15 locations and up to 8 feet bgs in five locations throughout the Site. The sampling event was conducted to identify additional source areas of radiological material at the Site. The soil samples were submitted for laboratory analyses of isotopic thorium, isotopic uranium, and other alpha emitting actinides via alpha spectroscopy HASL-300 Method U-02, radium-226 (21-day ingrowth), radium-228, and other gamma emitting radioisotopes via gamma spectroscopy EPA Method 901.1. Analytical results indicated that concentrations of Ra-226 exceeded the EPA Site-Specific Action Level (revised in April 2016) of 2.52 pCi/g in eight of the 25 soil samples collected from three locations at Property C002. Exceedance of Ra-226 ranged from 2.57 pCi/g to 89.39 pCi/g at 24 to 36 inches bgs. The concentration of Ra-226 was below the EPA Site-Specific Action Level in soil samples collected 0 to 12 inches bgs at all three soil sample locations. Analytical results indicated exceedance of Ra-226 above the EPA Site-Specific Action Level of 2.52 pCi/g in 32 of the 71 soil samples collected from 16 locations at Property C003. Exceedance of Ra-226 ranged from 2.79 pCi/g at 12 to 24 inches bgs to 926.1 pCi/g at 36 to 48 inches bgs. The concentration of Ra-226 was below the EPA Site-Specific Action Level in soil samples collected 0 to 12 inches bgs in 15 of the 16 soil sample locations.

In June 2016, EPA and the Department of Energy (DOE) independently conducted aerial overflights of the Site to determine the possibility of lateral spread of the radiation contamination. The DOE overflight indicated potential lateral spread to the west of the Site along Kisco Avenue. The EPA overflight indicated two other potential areas of interest. One area was located immediately southeast of the Site off North Moger Avenue and the second approximately one half mile southwest of the Site located within the parking lot of Diplomat Towers (a residential condominium complex).

On December 12, 2016, EPA and RST performed a non-intrusive ground radiological survey of the two new areas of interest to verify if the prior aerial overflight information generated by EPA and DOE were accurate. The areas within the parking lot of the Diplomat Towers and the parking lot immediately adjacent to the Site on the eastern side of the railroad tracks and fronting on North Moger Avenue were surveyed. Background gamma readings ranged from 17 to 20 kilo counts per minute (kcpm). Based on the results of the ground radiological survey, gamma readings did not exceed 30 kcpm in both areas of interest, which is below 2x background.

PROJECT DESCRIPTION

As part of the Removal Assessment of the Site, RST 3 has been tasked with providing support for a ground radiological survey, radon and soil sampling at Property C008 located adjacent to the Site. Up to 15 radon samples will be collected by RST 3-procured, NRPP-certified, company from frequently occupied spaces in the buildings at Property C008. Passive activated charcoal canisters will be utilized to conduct short-term radon sampling tests that will last a minimum of approximately 72 hours. Canister placement will be conducted in accordance with the guidelines

QAPP Worksheet #10: Problem Definition (Concluded)

presented in the American National Standards Institute (ANSI)/American Association of Radon Scientists and Technologists (AARST) *Protocol for Conducting Radon and Radon Decay Product Measurements in Multifamily Buildings* (MAMF 2012) and as directed by the EPA OSC.

Following the completion of the radiological survey, locations indicating the highest gamma screening measurements will be selected for soil sampling. Geoprobe technology will be utilized to advance up to 10 soil borings at the selected locations to depths of 8 feet bgs. The soil core extracted from each soil boring location will be screened at every 6-inch interval for gamma radiation using the Ludlum-2241 and a NaI 3x3 scintillator. At least two soil samples will be collected from each soil core at the intervals that exhibit the highest gamma readings and/or where a fill layer is observed and/or at the discretion of the EPA OSC. Up to 30 soil samples will be collected during the sampling event. The date of the Removal Assessment, analysis required, and assigned laboratory are yet to be determined.

PROJECT DECISION STATEMENTS

If the field measurements from the radiological surveys indicate elevated gamma radiation at locations on the property, then EPA will consider additional investigation in those areas.

If the analytical results from the radon sampling event indicates radon concentrations above the EPA Site-Specific Action Level, then EPA will consider installing a remediation system, and preform a post-remediation radon sampling in the buildings.

If the analytical results from the post-remediation sampling indicate normal radon levels, then no further action is required. EPA will inform the property owner accordingly.

If analytical results of post-remediation sampling indicates radon concentrations above the Site-Specific Action Level, then EPA will inform the property owner to consider other remediation options.

If the analytical results of the soil sampling event indicates concentrations of site-related contaminants, then EPA will inform the property owner and consider initiating a Removal Action.

QAPP Worksheet #11: Project Quality Objectives/Systematic Planning Process Statement

Overall project objectives include: RST 3 has been tasked with providing support for a ground radiological survey, radon and soil sampling at the Property P008, located adjacent to and in the vicinity of the Site. The objective of the survey and sampling events is to verify if there are radiation source areas at the property which may be attributed to the Site, and to ascertain if there is a potential health risk based on the findings from the Removal Assessment, in order to determine if a Remedial or Removal Action is warranted.

Who will use the data? Data will be used by EPA, Region II OSC.

What will the data be used for? To verify if there are radiation source areas at the property which may be attributed to the Site, and to ascertain if there is a potential health risk based on the findings from the Removal Assessment, in order to determine if a Remedial or Removal Action is warranted.

What types of data are needed?

Type of Data: Definitive data for radon and soil samples.

Analytical Techniques: To be determined.

Parameters: To be determined.

Type of survey/sampling equipment: The radiological survey will be mobile, and performed using a Ludlum-2241 and a NaI 3x3 scintillator connected to a Global Positioning System (GPS) unit (for geographical reference) and a laptop (with internet source) which will transmit data via a Life-line Interoperable Network Communicator (LINC) to EPA's VIPER system (a wireless network-based communication system) to provide instantaneous gamma readings through a computer server [Viper Deployment Manager (VDM)]. The instantaneous gamma readings along with the geographical locations will be viewed online on the VDM webpage via the laptop computer screen. A baby buggy stroller will be utilized to provide mobility for the survey instrumentation setup. All survey equipment will be provided by EPA.

Access Agreement: To be provided by EPA, Region II OSC.

Sampling locations: Sample locations will be identified on-site by the EPA OSC.

How much data are needed? Field measurements will be collected from locations throughout Property C008 during the ground radiological survey. Up to 15 radon samples will be collected by a NRPP-certified company. Up to 30 soil samples will be collected from the 10 soil boring locations, including QA/QC samples.

How "good" does the data need to be in order to support the environmental decision? Sampling/analytical measurement performance criteria for Precision, Accuracy, Representativeness, Completeness, and Comparability (PARCC) parameters will be established.

QAPP Worksheet #11: Project Quality Objectives/Systematic Planning Process Statement (Concluded)

Where, when, and how should the data be collected/generated? All sample locations will be determined in the field by the EPA OSC. The date of the event is yet to be determined. Canister placement will be conducted in accordance with the guidelines presented in the American ANSI/AARST) *Protocol for Conducting Radon and Radon Decay Product Measurements in Multifamily Buildings* (MAMF 2012) and as directed by the EPA OSC. All field activities, including soil sampling activities, will be performed in accordance with methods outlined in EPA's Environmental Response Team (ERT)/Scientific, Engineering, Response and Analytical Services (SERAS) contractor's Standard Operating Procedures (SOPs).

Who will collect and generate the data? The radon samples will be collected by RST 3-procured, NRPP-certified, company, and soil samples will be collected by RST 3 field personnel. Analytical assignments for the radon and soil samples are yet to be determined.

How will the data be reported? All data will be reported by the assigned laboratory (Preliminary, Electronic, and Hard Copy format). The Site Project Manager will provide a chronology of events, photolog, Sampling Trip Report, Status Reports, Maps/Figures, Analytical Report, and Data Validation Report to the EPA OSC.

How will the data be archived? Electronic data deliverables will be archived in a Scribe database. Non-CLP data will be archived in EPA's document control room.

Case 7:19-cv-03558-CS Document 7-3 Filed 04/22/19 Page 8 of 57

QAPP Worksheet #12: Measurement Performance Criteria Table

To be Determined

Matrix	
Analytical Group	
Concentration Level	

Sampling Procedure	Analytical Method/SOP	Sampling Procedure	Analytical Method/SOP	Sampling Procedure	Analytical Method/SOP

ED_006395_00002555-00088

QAPP Worksheet #13: Secondary Data Criteria and Limitations Table

Any data needed for project implementation or decision making that are obtained from non-direct measurement sources such as computer databases, background information, technologies and methods, environmental indicator data, publications, photographs, topographical maps, literature files and historical data bases will be compared to the DQOs for the project to determine the acceptability of the data. Thus, for example, analytical data from historical surveys will be evaluated to determine whether they satisfy the validation criteria for the project and to determine whether sufficient data was provided to allow an appropriate validation to be done. If not, then a decision to conduct additional sampling for the site may be necessary.

Secondary Data	Data Source (Originating Organization, Report Title, and Date)	Data Generator(s) (Originating Org., Data Types, Data Generation/ Collection Dates)	How Data May Be Used (if deemed usable during data assessment stage)	Limitations on Data Use
EPA Removal Assessments, May 2017.	RST 3 Phase III Removal Assessment Trip Report, May 2017 DCN: RST3-03-D-0206	Weston Solutions, Inc. (RST 3 Region 2)	To identify additional source areas and determine if the groundwater was being impacted by on-site radioactive materials.	Definitive data
EPA Removal Assessments, August 2015.	RST 3 Removal Assessment Trip Report, July 2016. DCN: RST3-03-D-0001	Weston Solutions, Inc. (RST 3 Region 2)	To verify the presence of residual radiological contamination in soil, identify potential releases of radiation-containing materials in soil and fill material, determine additional radiation source areas, and delineate the extent of on-site radiological contamination	Definitive data
EPA Removal Assessments, April 2016.	RST 3 Phase II Removal Assessment Trip Report, November 2016. DCN: RST3-03-D-0296	Weston Solutions, Inc. (RST 3 Region 2)	To identify additional source areas and to further delineate on-site radioactive contamination.	Definitive data

Case 7:19-cv-03558-CS Document 7-3 Filed 04/22/19 Page 9 of 57

ED_006395_00002555-00089

QAPP Worksheet #14: Summary of Project Tasks

Sampling Tasks:

As part of the Removal Assessment of the Site, RST 3 has been tasked with providing support for a ground radiological survey, radon and soil sampling at Property C008 located adjacent to the Site. Up to 15 radon samples will be collected by RST 3-procured, NRPP-certified, company from frequently occupied spaces in the buildings at Property C008. Passive activated charcoal canisters will be utilized to conduct short-term radon sampling tests that will last a minimum of approximately 72 hours. Canister placement will be conducted in accordance with the guidelines presented in the ANSI/AARST *Protocol for Conducting Radon and Radon Decay Product Measurements in Multifamily Buildings* (MAMF 2012) and as directed by the EPA OSC.

Following the completion of the radiological survey, locations indicating the highest gamma screening measurements will be selected for soil sampling. Geoprobe technology will be utilized to advance up to 10 soil borings at the selected locations to depths of 8 feet bgs. The soil core extracted from each soil boring location will be screened at every 6-inch interval for gamma radiation using the Ludlum-2241 and a NaI 3x3 scintillator. At least two soil samples will be collected from each soil core at the intervals that exhibit the highest gamma readings and/or where a fill layer is observed and/or at the discretion of the EPA OSC. Up to 30 soil samples will be collected during the sampling event. The date of the Removal Assessment, analysis required, and assigned laboratory are yet to be determined.

Analysis Tasks:

To be determined.

Data Management Tasks:

Activities under this project will be reported in status and trip reports and other deliverables (e.g., analytical reports, final reports) described herein. Activities will also be summarized in appropriate format for inclusion in monthly and annual reports.

The following deliverables will be provided under this project:

Trip Report: A trip report will be prepared to provide a detailed accounting of what occurred during each sampling mobilization. The trip report will be prepared within two weeks of the last day of each sampling mobilization. Information will be provided on time of major events, dates, and personnel on-site (including affiliations).

Maps/Figures: Maps depicting site layout, contaminant source areas, and sample locations will be included in the trip report, as appropriate.

Analytical Report: An analytical report will be prepared for samples analyzed under this plan. Information regarding the analytical methods or procedures employed, sample results, QA/QC results, chain-of-custody documentation, laboratory correspondence, and raw data will be provided within this deliverable.

QAPP Worksheet #14: Summary of Project Tasks (Continued)

Data Review: A review of the data generated under this plan will be undertaken. The assessment of data acceptability or usability will be provided separately, or as part of the analytical report.

Documentation and Records:

All sample documents will be completed legibly, in ink. Any corrections or revisions will be made by lining through the incorrect entry and by initialing the error.

Field Logbook: The field logbook is essentially a descriptive notebook detailing site activities and observations so that an accurate account of field procedures can be reconstructed in the writer's absence. Field logbook will be bound and paginated. All entries will be dated and signed by the individuals making the entries, and should include (at a minimum) the following

1. Site name and project number
2. Name(s) of personnel on-site
3. Dates and times of all entries (military time preferred)
4. Descriptions of all site activities, site entry and exit time
5. Noteworthy events and discussions
6. Weather conditions
7. Site observations
8. Sample and sample location identification and description*
9. Subcontractor information and names of on-site personnel
10. Date and time of sample collections, along with COC information
11. Record of photographs
12. Site sketches
13. GPS Coordinates for each sample location

* The description of the sample location will be noted in such a manner as to allow the reader to reproduce the location in the field at a later date.

Sample Labels: Sample labels will clearly identify the particular sample, and should include the following:

1. Site/project number.
2. Sample identification number.
3. Sample collection date and time.
4. Designation of sample (grab or composite).
5. Sample preservation.
6. Analytical parameters.
7. Name of sampler.

Sample labels will be written in indelible ink and securely affixed to the sample container. Tie-on labels can be used if properly secured.

Custody Seals: Custody seals demonstrate that a sample container has not been tampered with or opened. The individual in possession of the sample(s) will sign and date the seal, affixing it in

QAPP Worksheet #14: Summary of Project Tasks (Concluded)

such a manner that the container cannot be opened without breaking the seal. The name of this individual, along with a description of the sample packaging, will be noted in the field logbook.

Assessment/Audit Tasks: No performance audit of field operations is anticipated at this time. If conducted, performance and system audit will be in accordance with the project plan.

Data Review Tasks: All data will be validated by RST 3 data validation personnel.

Laboratory analytical results will be assessed by the data reviewer for compliance with required precision, accuracy, completeness, representativeness, and sensitivity.

QAPP Worksheet #15: Reference Limits and Evaluation Table

To Be Determined

Analyte	CAS Number	Project Quantitation Limit	Method CRQLs (pCi/g)	Achievable Laboratory (Pace Analytical Services) Limits Target Soil MDCs (pCi/g)	Achievable Laboratory (Pace Analytical Services) Limits Target Aqueous MDCs (pCi/L)
Uranium-233/234	13966-29-5	NS	NS	NS	NS
Uranium-235/236	15117-96-1	NS	NS	NS	NS
Uranium-238	7440-61-1	NS	NS	NS	NS
Thorium-228	14274-82-9	NS	NS	NS	NS
Thorium-230	14269-63-7	NS	NS	NS	NS
Thorium-232	7440-29-1	NS	NS	NS	NS
Radium-226 (in-growth)	13982-63-3	NS	NS	NS	NS
Radium-228	15262-20-1	NS	NS	NS	NS

NS – Not Specified

Case 7:19-cv-03558-CS Document 7-3 Filed 04/22/19 Page 13 of 57

ED_006395_00002555-00093

QAPP Worksheet #16: Project Schedule/Timeline Table

Activities	Organization	Dates (MM/DD/YY)		Deliverable	Deliverable Due Date
		Anticipated Date(s) of Initiation	Anticipated Date of Completion		
Preparation of QAPP	RST 3 Contractor Site Project Manager	Prior to sampling date	TBD	QAPP	TBD
Review of QAPP	RST 3 Contractor QAO and/or Group Leader	Prior to sampling date	TBD	Approved QAPP	TBD
Preparation of Health and Safety Plan	RST 3 Contractor Site Project Manager	Prior to sampling date	TBD	HASP	TBD
Procurement of Field Equipment	RST 3 Contractor Site Project Manager and/or Equipment Officer	Prior to sampling date	TBD	NA	TBD
Laboratory Request	Not Applicable	Prior to sampling date	TBD	TBD	TBD
Field Reconnaissance/Access	RST 3 Contractor Site Project Manager; or EPA Region II OSC	TBD	TBD	NA	TBD
Collection of Field Samples	RST 3 Contractor Site Project Manager	TBD	TBD	NA	TBD
Laboratory Electronic Data Received	RST 3 Contractor and EPA Region 2 DEWSA	TBD	TBD	Preliminary Data	TBD
Laboratory Package Received	RST 3 Contractor and EPA Region 2 DEWSA	TBD	TBD	Validated Data	TBD
Validation of Laboratory Results	RST 3 Contractor and EPA Region 2 DEWSA	TBD	TBD	Final Report	TBD
Data Evaluation/ Preparation of Final Report	RST 3 Contractor Site Project Manager	TBD	TBD	Final Report	TBD

NA – Not Applicable, TBD – To be Determined

Case 7:19-cv-03558-CS Document 7-3 Filed 04/22/19 Page 14 of 57

ED_006395_00002555-00094

QAPP Worksheet #17: Sampling Design and Rationale

Sampling Tasks:

As part of the Removal Assessment of the Site, RST 3 has been tasked with providing support for a ground radiological survey, radon and soil sampling at the Property P008, located adjacent to and in the vicinity of the Site. The objective of the survey and sampling events is to verify if there are radiation source areas at the property which may be attributed to the Site.

RST 3-procured, NRPP-certified, company will provide field support for identifying radon canister placement locations in living spaces of on-site buildings, placing the canisters, picking up the canisters, and delivering to the assigned laboratory for radon analysis. Passive activated charcoal canisters will be utilized to conduct short-term radon sampling tests that will last a minimum of approximately 72 hours. Weather information including, temperature, humidity, wind speed and direction, and barometric pressure will be documented during canister deployment and pickup. Canister placement will be conducted in accordance with the guidelines presented in the ANSI/AARST *Protocol for Conducting Radon and Radon Decay Product Measurements in Multifamily Buildings* (MAMF 2012) and as directed by the OSC. Radon testing locations will be focused on frequently occupied spaces in each on-site building. Bathrooms, kitchens, utility closets, and hallways will not tested to avoid biased results. The canisters will be raised no less than approximately 20 inches above the ground, and where possible, away from draft and vents. The samples will be collected for definitive data and QA/QC objectives. Field duplicates (co-located samples) and field blank samples will be collected at a rate of 10% of the total field samples.

Soil sampling will be conducted in accordance with EPA's ERT/SERAS contractor's SOP 2012: *Soil Sampling*. Locations exhibiting significantly high radioactivity measurements during ground radiological survey will be identified and flagged as soil sampling locations by the EPA OSC. Dig Safely New York will be contacted by RST to conducted subsurface utilities mark-out in order to clear the locations within the ROW areas. In accordance with EPA's ERT/SERAS SOP 2050: *Geoprobe Operation,* RST 3 drilling subcontractor will conduct subsurface utilities mark-out around all the proposed soil sampling locations prior to advancing soil borings with a Geoprobe®. Soil borings will be advanced to depths of 8 feet bgs. The soil cores extracted from each soil sample location will be screened at every 6-inch interval for gamma radiation using the Ludlum-2241 and a NaI 3x3 scintillator. At least two soil samples will be collected from each soil core at the intervals that exhibit the highest gamma readings and/or where a fill layer is observed and/or at the discretion of the EPA OSC. The boreholes will be backfilled in reverse order with the extracted soil in the cores, tamped down, and sealed with topsoil (for sample locations in bare soil/grassy areas) or asphalt patch (for sample locations on asphalt-paved areas). It is anticipated that up to 30 soil samples, including QA/QC samples, will be collected.

Decontamination of non-dedicated sampling equipment (*i.e.* Geoprobe® cutting shoe) will be performed in accordance with EPA's ERT/SERAS SOP No. 2006, and will include: Alconox detergent and potable water scrub, potable water rinse, distilled water rinse, isopropyl alcohol rinse, distilled water rinse, steam clean, and air dry. A generator will be utilized to power and operate a steamer for decontamination of non-dedicated sampling equipment. One rinsate blank will be collected at the end of each sampling day to demonstrate adequacy of decontamination of non-dedicated sampling equipment (*i.e.* Geoprobe® cutting shoe).

QAPP Worksheet #17: Sampling Design and Rationale (Concluded)

All disposable sampling equipment (used acetate sleeves) will be cleaned of gross contamination, and disposed of in accordance with local, state, and federal regulations. All samples to be analyzed is to be determined.

This sampling design is based on information currently available and may be modified on-site in light of field screening results and other acquired information.

The following laboratories will provide the analyses indicated:

Lab Name/Location	Sample Type	Parameters
TBD	TBD	TBD

TBD – To be Determined

QAPP Worksheet #18: Sampling Locations and Methods/SOP Requirements Table

To be Determined

Matrix	Sampling Location(s)	Units	Analytical Group(s)	Concentration Level	No. of Samples (identify field duplicates)	Sampling SOP Reference	Rationale for Sampling Location

The website for EPA-ERT SOPs is: https://www.epaosc.org/site/doc_list.aspx?site_id=2107&category=Field%20Activities

QAPP Worksheet #19: Analytical SOP Requirements Table

To be Determined

Matrix	No. of Samples	Analytical Group	Concentration Level	Analytical / Preparation Method SOP Reference[1]	Containers (number, size, and type)	Sample volume[2] (units)	Preservation Requirements (chemical, temperature, light protected)	Maximum Holding Time (preparation / analysis)

QAPP Worksheet #20: Field Quality Control Sample Summary Table

To be Determined

Matrix	Analytical Group	Concentration Level	Analytical and Preparation SOP Reference	No. of Sampling Locations	No. of Field Duplicate Pairs	No. of Extra Volume Laboratory QC (e.g., MS/MSD) Samples[1]	No. of Rinsate Blanks[1]	No. of Trip. Blanks	No. of PE Samples

QAPP Worksheet #21: Project Sampling SOP References Table

Reference Number	Title, Revision Date and/or Number	Originating Organization	Equipment Type	Modified for Project Work? (Y/N)	Comments
SOP#: 2001	General Field Sampling Guidelines (all media); Rev. 0.1, June 7, 2013	EPA/SERAS	Site-Specific	N	--

See attachment B for SOP # 2001
https://www.epaosc.org/site/doc_list.aspx?site_id=2107&category=Field%20Activities

QAPP Worksheet #22: Field Equipment Calibration, Maintenance, Testing, and Inspection Table

Field Equipment	Calibration Activity	Maintenance Activity	Testing/ Inspection Activity	Frequency	Acceptance Criteria	Corrective Action	Responsible Person	SOP Reference
*Ludlum Model 2241 with 3x3 Gamma Scintillator, GPS and buggy	EPA Equipment office	EPA Equipment office	EPA Equipment office	EPA Equipment office	EPA Equipment office	EPA Equipment office	EPA Equipment office	NA
*Viper Kit (Laptop, Gateway and, LINC).	EPA Equipment office	EPA Equipment office	EPA Equipment office	EPA Equipment office	EPA Equipment office	EPA Equipment office	EPA Equipment office	NA
Generator to operate a steamer for decontamination	As per manufacturer's recommendations	As per manufacturer's recommendations	As per manufacturer's recommendations	As per manufacturer's recommendations	NA	NA	RST 3 field person	NA
Trimble® GeoXT™ handheld								

*Equipment provided, calibrated, maintained, tested, and inspected by EPA.

QAPP Worksheet #23: Analytical SOP References Table

To be Determined

Reference Number	Title, Revision Date, and/or Number	Definitive or Screening Data	Analytical Group	Instrument	Organization Performing Analysis	Modified for Project Work? (Y/N)

QAPP Worksheet #24: Analytical Instrument Calibration Table

To be Determined

Instrument	Calibration Procedure	Frequency of Calibration	Acceptance Criteria	Corrective Action	Person Responsible for CA	SOP Reference[1]

QAPP Worksheet #25: Analytical Instrument and Equipment Maintenance, Testing, and Inspection Table

To be Determined

Instrument/ Equipment	Maintenance Activity	Testing Activity	Inspection Activity	Frequency	Acceptance Criteria	Corrective Action	Responsible Person	SOP Reference
						•		
						•		
	1.	1.	1.	1.	1.	•		

QAPP Worksheet #26: Sample Handling System

SAMPLE COLLECTION, PACKAGING, AND SHIPMENT
Sample Collection (Personnel/Organization): RST 3 Site Project Manager, Weston Solutions, Inc., Region II
Sample Packaging (Personnel/Organization): RST 3 Site Project Manager and sampling team members, Weston Solutions, Inc., Region II
Coordination of Shipment (Personnel/Organization): RST 3 Site Project Manager, sampling team members, Weston Solutions, Inc., Region II
Type of Shipment/Carrier: FedEx
SAMPLE RECEIPT AND ANALYSIS
Sample Receipt (Personnel/Organization): Sample Custodian, RST 3-Procured Non-RAS Laboratory
Sample Custody and Storage (Personnel/Organization): Sample Custodian, RST 3-Procured Non-RAS Laboratory
Sample Preparation (Personnel/Organization): Sample Custodian, RST 3-Procured Non-RAS Laboratory
Sample Determinative Analysis (Personnel/Organization): Sample Custodian, RST 3-Procured Non-RAS Laboratory
SAMPLE ARCHIVING
Field Sample Storage (No. of days from sample collection): Samples to be shipped same day of collection, and arrive at laboratory within 24 hours (1 day) of sample shipment
Sample Extract/Digestate Storage (No. of days from extraction/digestion): As per analytical methodology; see Worksheet #19
SAMPLE DISPOSAL
Personnel/Organization: Sample Custodian, RST 3-Procured Non-RAS Laboratory
Number of Days from Analysis: Until analysis and QA/QC checks are completed; as per analytical methodology; see Worksheet #19.

QAPP Worksheet #27: Sample Custody Requirements

Sample Identification Procedures Each sample will be labeled with the site identification code and a sample type letter code and number that depicts a specific location. Additional information such as depth, sampling round, date, etc. will be added. The sample type will be designated as follows: 01 – Field Sample, 02 – Duplicate Sample. Rinsate blank samples will be identified as RB-{DATE}.

Example sample locations:

1) Soil samples will be designated as: C008-SB01-0204-01 (Property C008, Soil Boring collected from location 01, Sample collected from 0 inches to 4 inches bgs, Sample number 01).

Location of the sample collected will be recorded in the project database and site logbook. A duplicate sample will be identified in the same manner as other samples and will be distinguished and documented in the field logbook. Each sample will also be labeled with a non-CLP assigned number. Depending on the type of sample, additional information such as sampling round, date, etc. will be added.

Field Sample Custody Procedures (sample collection, packaging, shipment, and delivery to laboratory): Each sample will be individually identified and labeled after collection, then sealed with custody seals and enclosed in a plastic cooler. The sample information will be recorded on chain-of custody (COC) forms, and the samples shipped to the appropriate laboratory via overnight delivery service or courier. Chain-of-custody records must be prepared in Scribe to accompany samples from the time of collection and throughout the shipping process. Each individual in possession of the samples must sign and date the sample COC Record. The chain-of-custody record will be considered completed upon receipt at the laboratory. A traffic report and chain-of-custody record will be maintained from the time the sample is taken to its final deposition. Every transfer of custody must be noted and signed for, and a copy of this record kept by each individual who has signed. When samples are not under direct control of the individual responsible for them, they must be stored in a locked container sealed with a custody seal. Specific information regarding custody of the samples projected to be collected on the weekend will be noted in the field logbook. The chain-of-custody record should include (at minimum) the following: 1) Sample identification number; 2) Sample information; 3) Sample location; 4) Sample date; 5) Sample Time; 6) Sample Type Matrix; 7) Sample Container Type; 8) Sample Analysis Requested; 9) Name(s) and signature(s) of sampler(s); and 10) Signature(s) of any individual(s) with custody of samples.

A separate chain-of-custody form must accompany each cooler for each daily shipment. The chain-of-custody form must address all samples in that cooler, but not address samples in any other cooler. This practice maintains the chain-of-custody for all samples in case of mis-shipment.

Laboratory Sample Custody Procedures (receipt of samples, archiving, and disposal): A sample custodian at the laboratory will accept custody of the shipped samples, and check them for discrepancies, proper preservation, integrity, etc. If noted, issues will be forwarded to the laboratory manager for corrective action. The sample custodian will relinquish custody to the appropriate department for analysis. At this time, no samples will be archived at the laboratory. Disposal of the samples will occur only after analyses and QA/QC checks are completed.

QAPP Worksheet #28: QC Samples Table

To be determined

Matrix	To be determined
Analytical Group	To be determined
Concentration Level	Low/Medium
Sampling SOP	2001, 2012, 2006, 2050
Analytical Method/ SOP Reference	To be determined
Sampler's Name	Lionel Montanez
Field Sampling Organization	Weston Solutions, Inc. , RST 3
Analytical Organization	To be determined
No. of Sample Locations	10

QC Sample:	Frequency/Number	Method/SOP QC Acceptance Limits	Corrective Action	Person(s) Responsible for Corrective Action	Data Quality Indicator (DQI)	Measurement Performance Criteria

QAPP Worksheet #29: Project Documents and Records Table

Sample Collection Documents and Records	Analysis Documents and Records	Data Assessment Documents and Records	Other
Field Notes Digital Photographs Chain-of-Custody (COC) Records Air Bills Copies of Pertinent e-mails. Field Instrument Records	Record of Field Instrument. Measurements and Radiological Readings. Radiological Dosimetry Records. Corrective Action Reports. Radiological Instrument Calibration Readings.	Copies of all Analytical Data Deliverables; hard copies of raw data are archived; The raw data files from the laboratory include Analytical Instrument Calibration Records, COC Records, and Sample Preparation and Analysis Files, Sample Receipt Records	Staff Health and Safety Records; CLP Request Form and RST 3 Analytical Request Form

QAPP Worksheet #30: Analytical Services Table

To be determined

Matrix	Analytical Group	Concentration Level	Analytical SOP	Data Package Turnaround Time	Laboratory/Organization (Name and Address, Contact Person and Telephone Number)	Backup Laboratory/Organization (Name and Address, Contact Person and Telephone Number)

QAPP Worksheet #31: Planned Project Assessments Table

Assessment Type	Frequency	Internal or External	Organization Performing Assessment	Person(s) Responsible for Performing Assessment (Title and Organizational Affiliation)	Person(s) Responsible for Responding to Assessment Findings (Title and Organizational Affiliation)	Person(s) Responsible for Identifying and Implementing Corrective Actions (Title and Organizational Affiliation)	Person(s) Responsible for Monitoring Effectiveness of Corrective Actions (Title and Organizational Affiliation)
Laboratory Technical Systems/ Performance Audits	Every year	External	Regulatory Agency	Regulatory Agency	RST 3-Procured Laboratory	RST 3-Procured Laboratory	EPA, State, NRC, or other Regulatory Agency
Performance Evaluation Samples	Every year	External	Regulatory Agency	Regulatory Agency	RST 3-Procured Laboratory	RST 3-Procured Laboratory	EPA, State, NRC, or other Regulatory Agency
Peer Review	Each Deliverable	Internal	Weston Solutions, Inc.	QAO, Group Leader, and Readiness Coordinator	SPM, Weston Solutions, Inc.	SPM, Weston Solutions, Inc.	EPA OSC and/or EPA QAO
Proficiency Testing	Semiannually	External	NELAC	PT provider	Lab Personnel	Lab Personnel	Lab QA Officer
NELAC	Every two years	External	NELAC	NELAC Representative	Lab QA Officer	Lab Personnel	NELAC Representative
Internal Audit	Annually	Internally	Pace Analytical Services	Lab QA Officer	Lab Personnel	Lab Personnel	Lab QA Officer

NRC: Nuclear Regulator Commission

QAPP Worksheet #32: Assessment Findings and Corrective Action Responses

Assessment Type	Nature of Deficiencies Documentation	Individual(s) Notified of Findings (Name, Title, Organization)	Timeframe of Notification	Nature of Corrective Action Response Documentation	Individual(s) Receiving Corrective Action Response (Name, Title, Org.)	Timeframe for Response
Project Readiness Review	Checklist or logbook entry	RST 3 Site Project Manager, Weston Solutions, Inc.	Immediately to within 24 hours of review	Checklist or logbook entry	RST 3 Site Project Leader	Immediately to within 24 hours of review
Field Observations/ Deviations from Work Plan	Logbook	RST 3 Site Project Manager, Weston Solutions, Inc. and EPA OSC	Immediately to within 24 hours of deviation	Logbook	RST 3 Site Project Manager and EPA OSC	Immediately to within 24 hours of deviation
Laboratory Technical Systems/ Performance Audits	Written Report	RST 3-Procured Laboratory	30 days	Letter	RST 3-Procured Laboratory	14 days
On-Site Field Inspection	Written Report	QAO/HSO Weston Solutions, Inc.	7 calendar days after completion of the audit	Letter/Internal Memorandum	Weston's regional QAO and/or EPA OSC	To be identified in the cover letter of the report
Performance Evaluation Samples	Electronic Report	CLP and Non-CLP /RST 3-Procured Laboratories	30 days	Letter or Written Report	CLP and Non-CLP /RST 3-Procured Laboratories	14 days
Peer Review	Deliverables	SPM, Weston Solutions, Inc.	Prior to deliverable due date	Comments directly on deliverable	SPM, Weston Solutions, Inc.	Prior to deliverable due date

QAPP Worksheet #33: QA Management Reports Table

Type of Report	Frequency (Daily, weekly, monthly, quarterly, annually, etc.)	Projected Delivery Date(s)	Person(s) Responsible for Report Preparation (Title and Organizational Affiliation)	Report Recipient(s) (Title and Organizational Affiliation)
RST 3-Procured Laboratory Data (preliminary)	As performed	2 weeks from the sampling date	RST 3-Procured Laboratory	RST 3 Data Validator and RST 3 Site Project Manager
RST 3-Procured Laboratory Data (validated)	As performed	Up to 14 days after receipt of preliminary data	RST 3 Data Validators	RST 3 Site Project Manager and OSC, EPA Region II
On-Site Field Inspection	As performed	7 calendar days after completion of the inspection	RST 3 Site Safety Officer	RST 3 Site Project Manager
Field Change Request	As required per field change	3 days after identification of need for field change	RST 3 Site Project Manager	EPA, Region II OSC
Final Report	As performed	2 weeks after receipt of EPA approval of data package	RST 3 Site Project Manager	EPA, Region II OSC

QAPP Worksheet #34: Verification (Step I) Process Table

Verification Input	Description	Internal/ External	Responsible for Verification (Name, Organization)
Site/field logbooks	Field notes will be prepared daily by the RST 3 Site Project Manager and will be complete, appropriate, legible and pertinent. Upon completion of field work, logbooks will be placed in the project files.	I	RST 3 Site Project Manager
Chains of custody	COC forms will be reviewed against the samples packed in the specific cooler prior to shipment. The reviewer will initial the form. An original COC will be sent with the samples to the laboratory, while copies are retained for (1) the Sampling Trip Report and (2) the project files.	I	RST 3 Site Project Manager
Sampling Trip Reports	STRs will be prepared for each week of field sampling [for which samples are sent to an EPA CLP RAS laboratory]. Information in the STR will be reviewed against the COC forms, and potential discrepancies will be discussed with field personnel to verify locations, dates, etc.	I	RST 3 Site Project Manager
Laboratory analytical data package	Data packages will be reviewed/verified internally by the laboratory performing the work for completeness and technical accuracy prior to submittal.	E	RST 3-Procured Laboratories
Laboratory analytical data package	Data packages will be reviewed as to content and sample information upon receipt by EPA.	I	RST 3 Site Project Manager
Final Sample Report	The project data results will be compiled in a sample report for the project. Entries will be reviewed/verified against hardcopy information.	I	RST 3 Site Project Manager

QAPP Worksheet #35: Validation (Steps IIa and IIb) Process Table

Step IIa/IIb	Validation Input	Description	Responsible for Validation (Name, Organization)
IIa	SOPs	Ensure that the sampling methods/procedures outlined in QAPP were followed, and that any deviations were noted/approved.	RST 3 Site Project Manager
IIb	SOPs	Determine potential impacts from noted/approved deviations, in regard to PQOs.	RST 3 Site Project Manager
IIa	Chains of custody	Examine COC forms against QAPP and laboratory contract requirements (e.g., analytical methods, sample identification, etc.).	RST 3- procured laboratory - RST 3 data validator
IIa	Laboratory data package	Examine packages against QAPP and laboratory contract requirements, and against COC forms (e.g., holding times, sample handling, analytical methods, sample identification, data qualifiers, QC samples, etc.).	RST 3- procured laboratory - RST 3 data validator
IIb	Laboratory data package	Determine potential impacts from noted/approved deviations, in regard to PQOs. Examples include PQLs and QC sample limits (precision/accuracy).	RST 3- procured laboratory - RST 3 data validator
IIb	Field duplicates	Compare results of field duplicate (or replicate) analyses with RPD criteria	RST 3- procured laboratory - RST 3 data validator

QAPP Worksheet #36: Validation (Steps IIa and IIb) Summary Table

Step IIa/IIb	Matrix	Analytical Group	Validation Criteria	Data Validator (title and organizational affiliation)
IIa / IIb	Aqueous	Radiological Parameters	Refer to methods listed in worksheet # 19 & 20, and Laboratory SOPs in Attachment C	RST 3 subcontractor Data Validation Personnel

QAPP Worksheet #37: Usability Assessment

Summarize the usability assessment process and all procedures, including interim steps and any statistics, equations, and computer algorithms that will be used: Data, whether generated in the field or by the laboratory, are tabulated and reviewed for Precision, Accuracy, Representativeness, Completeness, and Comparability (PARCCS) by the SPM for field data or the data validator for laboratory data. The review of the PARCC Data Quality Indicators (DQI) will compare with the DQO detailed in the site-specific QAPP, the analytical methods used and impact of any qualitative and quantitative trends will be examined to determine if bias exists. A hard copy of field data is maintained in a designated field or site logbook. Laboratory data packages are validated, and final data reports are generated. All documents and logbooks are assigned unique and specific control numbers to allow tracking and management.
Questions about Non-CLP data, as observed during the data review process, are resolved by contacting the respective site personnel and laboratories as appropriate for resolution. All communications are documented in the data validation record with comments as to the resolution to the observed deficiencies.

Where applicable, the following documents will be followed to evaluate data for fitness in decision making: EPA QA/G-4, *Guidance on Systematic Planning using the Data Quality Objectives Process*, EPA/240/B-06/001, February 2006, and EPA QA/G-9R, *Guidance for Data Quality Assessment*, A reviewer's Guide EPA/240/B-06/002, February 2006.

Describe the evaluative procedures used to assess overall measurement error associated with the project:
As delineated in the ***Uniform Federal Policy for Implementing Environmental Quality Systems: Evaluating, Assessing and Documenting Environmental Data Collection and Use Programs Part 1: UFP-QAPP (EPA-505-B-04-900A, March 2005); Part 2A: UFP-QAPP Workbook (EPA-505-B-04-900C, March 2005); Part 2B: Quality Assurance/Quality Control Compendium: Non-Time Critical QA/QC Activities (EPA-505-B-04-900B, March 2005);*** "Graded Approach" will be implemented for data collection activities that are either exploratory or where specific decisions cannot be identified, since this guidance indicates that the formal DQO process is not necessary.

The data will be evaluated to determine whether they satisfy the PQO for the project. The validation process determines if the data satisfy the QA criteria. After the data pass the data validation process, comparison results with the PQO is done.

QAPP Worksheet #37: Usability Assessment (Concluded)

EPA will utilize the analytical results to verify if there are radiation source areas at the property which may be attributed to the Site, and to ascertain if there is a potential health risk based on the findings from the Removal Assessment, in order to determine if a Remedial or Removal Action is warranted.

Identify the personnel responsible for performing the usability assessment: Site Project Manager, Data Validation Personnel, and EPA, Region II OSC

Describe the documentation that will be generated during usability assessment and how usability assessment results will be presented so that they identify trends, relationships (correlations), and anomalies:

A copy of the most current approved QAPP, including any graphs, maps and text reports developed will be provided to all personnel identified on the distribution list.

ATTACHMENT A

Figure 1: Site Overview Map
Figure 1: Proposed Soil Boring Location Map

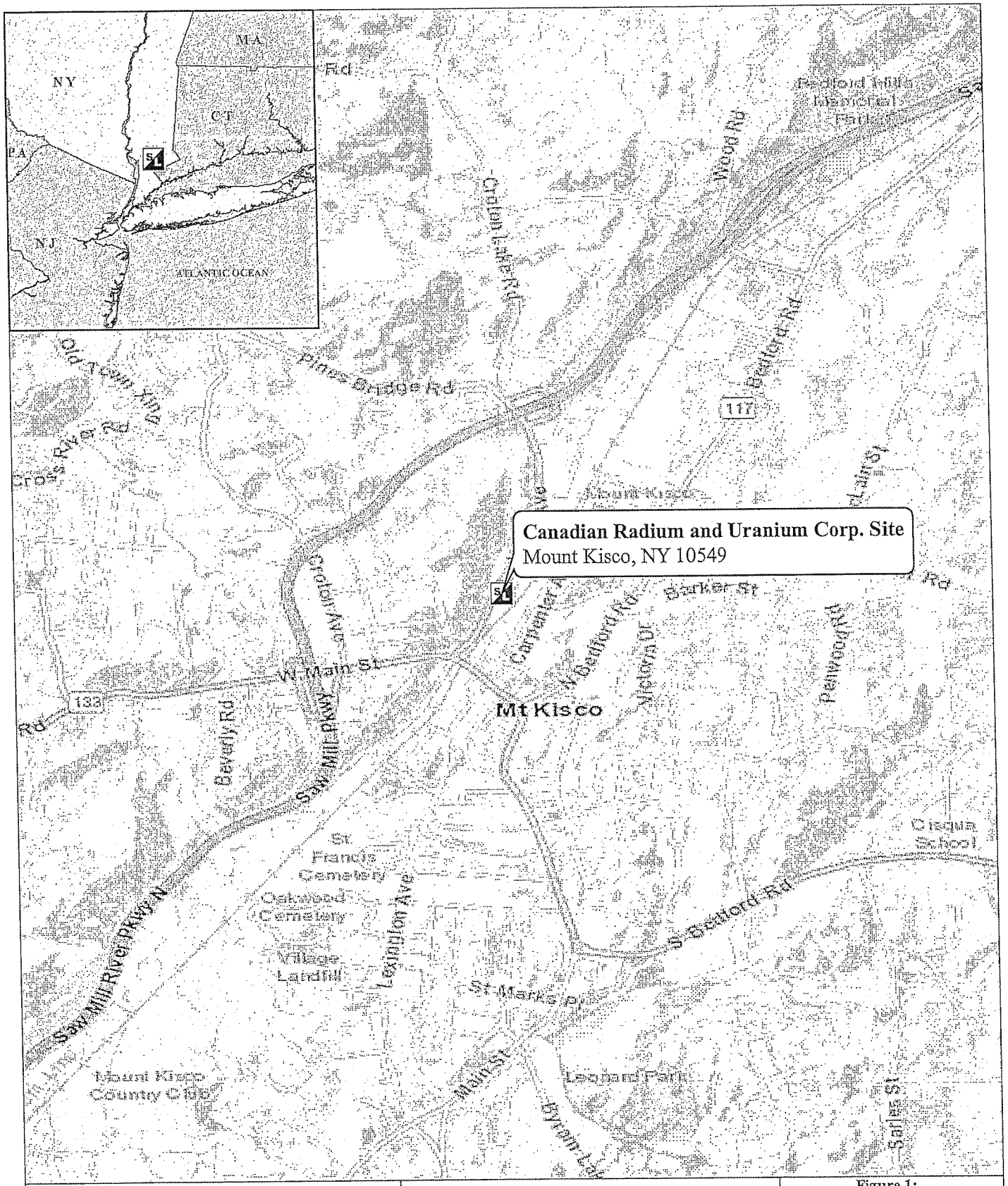

Legend

Site Location

Weston Solutions, Inc.
East Division

In Association With
Scientific and Environmental Associates, Inc.,
Environmental Compliance Consultants, Inc.,
Avatar Environmental, LLC, On-Site Environmental,
Inc.and Sovereign Consulting, Inc

Figure 1:
Site Location Map

Canadian Radium and Uranium Corp. Site
Mount Kisco, New York

U.S. ENVIRONMENTAL PROTECTION AGENCY
REMOVAL SUPPORT TEAM 3
CONTRACT # EP-S2-14-01

GIS ANALYST:	M. MANNINO
EPA OSC:	D. GAUGHAN
RST SPM:	B. NWOSU
FILENAME:	180605_SiteLocationMap

DATE MODIFIED: 6/5/2018

\\fsed2data1\GISData\RST_3\00100015\MXD\180605_SiteLocationMap.mxd

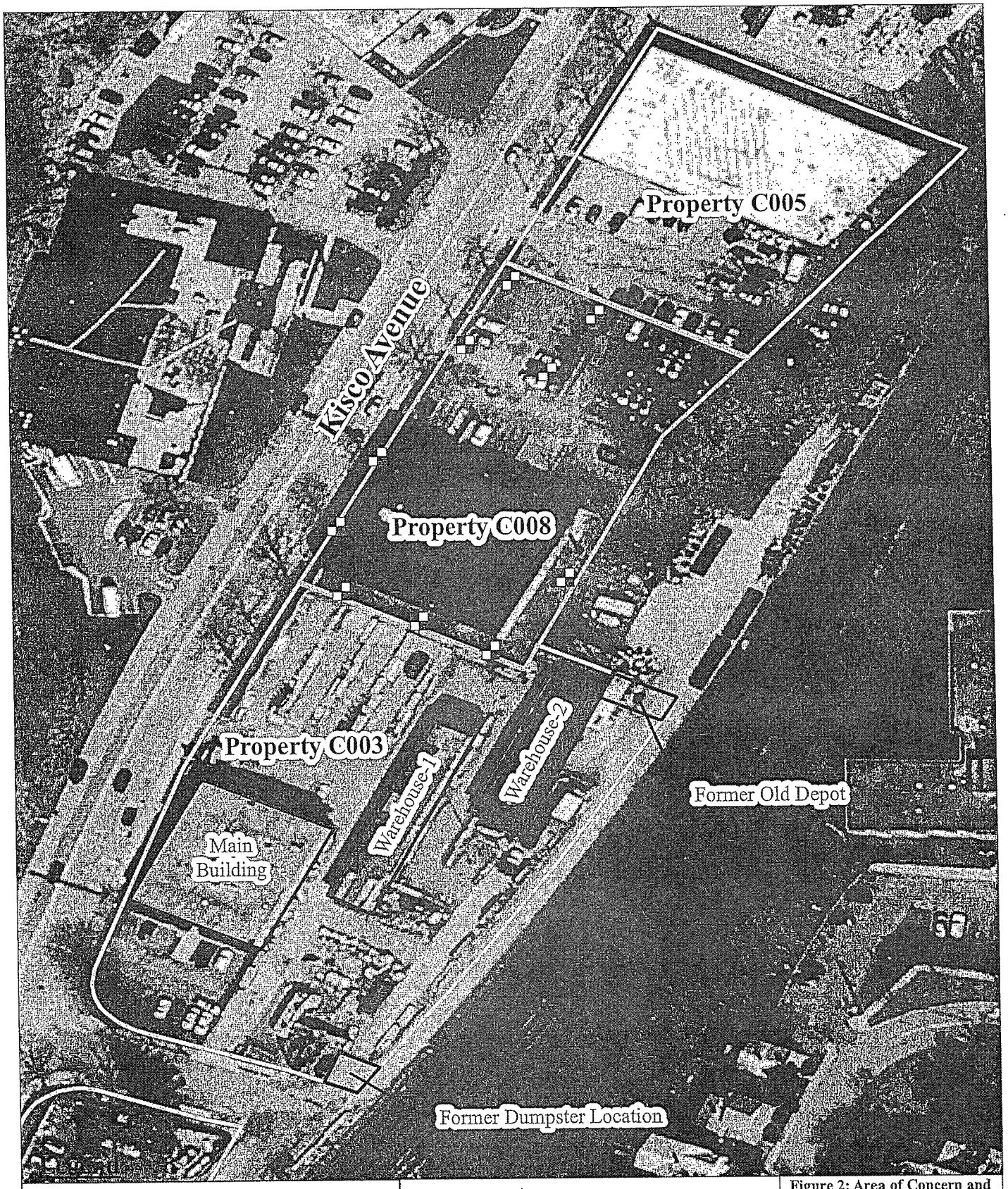

Proposed Soil Boring Location

Site Features

Property Boundary

Area of Concern

Weston Solutions, Inc.
East Division

In Association With
Scientific and Environmental Associates, Inc.,
Environmental Compliance Consultants, Inc.,
Avatar Environmental, LLC, On-Site Environmental,
Inc.and Sovereign Consulting, Inc

Figure 2: Area of Concern and Proposed Sample Location Map

Canadian Radium and Uranium Corp. Site
Mount Kisco, New York

U.S. ENVIRONMENTAL PROTECTION AGENCY
REMOVAL SUPPORT TEAM 3
CONTRACT # EP-S2-14-01

DATE MODIFIED: 6/8/2018

GIS ANALYST:	M. MANNINO
EPA OSC:	D. GAUGHAN
RST SPM:	B. NWOSU
FILENAME:	180605_CRU_AOC_Map

\\fsed2data1\GISData\RST_3\00100015\MXD\180605_CRU_AOC_Map.mxd

ATTACHMENT B

Sampling SOPs
EPA/SERAS SOP # 2001, #2006, #2012, #2050

STANDARD OPERATING PROCEDURES

GENERAL FIELD SAMPLING GUIDELINES

CONTENTS

1.0 OBJECTIVE

2.0 APPLICABILITY

3.0 DESCRIPTION

- 3.1 Planning Stage
- 3.2 Sampling Design
  - 3.2.1 Judgmental Sampling
  - 3.2.2 Systematic Sampling
  - 3.2.3 Simple and Stratified Random Sampling
- 3.3 Sampling Techniques
  - 3.3.1 Sample Collection Techniques
  - 3.3.2 Homogenization
  - 3.3.3 Filtration
- 3.4 Quality Assurance/Quality Control (QA/QC) Samples
- 3.5 Sample Containers, Preservation, Storage and Holding Times
- 3.6 Documentation

4.0 RESPONSIBILITIES

- 4.1 SERAS Task Leaders
- 4.2 SERAS Field Personnel
- 4.3 SERAS Program Manager
- 4.4 SERAS QA/QC Officer
- 4.5 SERAS Health and Safety Officer

Complete Rewrite: SOP #2001; Revision 1.0; 03/15/13; U.S. EPA Contract EP-W-09-031

SUPERCEDES: SOP #2001; Revision 0.0; 08/11/94; U.S. EPA Contract 68-C4-0022

STANDARD OPERATING PROCEDURES

GENERAL FIELD SAMPLING GUIDELINES

1.0 OBJECTIVE

The objective of this standard operating procedure (SOP) is to describe the general field sampling techniques and guidelines that will assist the Scientific Engineering Response and Analytical Services (SERAS) personnel in planning, choosing sampling strategies and sampling locations, and frequency of Quality Control (QC) samples for proper assessment of site characteristics. The ultimate goal is to ensure data quality during field collection activities.

2.0 APPLICABILITY

This SOP applies to the collection of aqueous and non-aqueous samples for subsequent laboratory analysis to determine the presence, type, and extent of contamination at a site.

3.0 DESCRIPTION

Representative sampling ensures that a sample or a group of samples accurately reflect the concentration of the contaminant at a given time and location. Depending on the contaminant of concern and matrix, several variables may affect the representativeness of the samples and subsequent measurements. Environmental variability due to non-uniform distribution of the pollutant due to topographic, meteorological and hydrogeological factors, changes in species, and dispersion of contaminants and flow rates contribute to uncertainties in sampling design.

Determining the sampling approach depends on what is known about the site from prior sampling (if any) and the site history, variation of the contaminant concentrations throughout a site, potential migration pathways, and human and environmental receptors. The objectives of an investigation determine the appropriate sampling design.

The frequency of sampling and the specific sample locations that are required must be defined in the site-specific Quality Assurance Project Plan (QAPP).

3.1 Planning Stage

The objectives of an investigation are established and documented in the site-specific QAPP. The technical approach including the media/matrix to be sampled, sampling equipment to be used, sampling design and rationale, and SOPs or descriptions of the procedure to be implemented are included in the QAPP. Refer to the matrix-specific SOPs for sampling techniques which include the equipment required for sampling.

During the planning stage, the data quality objectives (DQOs) will be determined. In turn, the project's DQOs will determine the need for screening data or definitive data. Screening data supports an intermediate or preliminary decision but eventually is supported by definitive data before the project is complete (i.e., placement of monitor wells, estimation of extent of contamination). Definitive data is suitable for final decision making, has defined precision and accuracy requirements and is legally defensible (i.e., risk assessments, site closures).

3.2. Sampling Design

Representative sampling approaches include judgmental, random, systematic grid, systematic simple random, stratified random and transect sampling. Sampling designs may be applied to soil,

sediment and water; however, the random and systematic random approaches are not practical for sampling water systems, especially flowing water systems.

3.2.1 Judgmental Sampling

Judgmental sampling is the subjective selection of sampling locations based on the professional judgment of the field team. This method is useful to locate and to identify potential sources of contamination. It may not be representative of the full site and is used to document worst case scenarios. For example, groundwater sampling points are typically chosen based on professional judgment, whether permanently installed wells or temporary well points.

3.2.2 Systematic Sampling

Systematic grid sampling involves the collection of samples at fixed intervals when the contamination is assumed to be randomly distributed. A random point is chosen as the origin for the placement of the grid. A grid is constructed over a site and samples are collected from the nodes (where the grid lines intersect). Depending on the number of samples that are required to be collected, the distance between the sampling locations can be adjusted. The representativeness of the sampling may be improved by shortening the distance between sample locations.

Systematic random sampling is used for estimating contaminant concentrations within grid cells. Instead of sampling at each node, a random location is chosen within each grid cell. The systematic grid and random sampling approaches are useful for delineating the extent of contamination, documenting the attainment of clean-up goals, and evaluating and determining treatment and disposal options.

Transect sampling involves one or more transect lines established across the site. Samples are collected at systematic intervals along the transect lines. The number of samples to be collected and the length of the transect line determines the spacing between the sampling points. This type of sampling design is useful for delineating the extent of contamination at a particular site, for documenting the attainment of clean-up goals, and for evaluating and determining treatment and disposal options.

3.2.3 Simple and Stratified Random Sampling

Statistical random sampling includes simple, stratified and systematic sampling. Simple random sampling is appropriate for estimating means and total concentrations, if the site or population does not contain a major trend or pattern of contamination. A statistician will generate the sampling locations based on sound statistical methods. Stratified random sampling is a useful tool for estimating average contaminant concentrations and total amounts of contaminants within specified strata and across the entire site. It is useful when a heterogeneous population or area can be broken down into regions with less variability within the boundaries of a stratum then between the strata. Additionally, strata can be defined based on the decisions that will be made. This type of sampling design uses historical information, known ecological and human receptors, soil type, fate and transport mechanism and other ecological factors to divide the sampling area into smaller regions or strata. Sampling locations are selected from each stratum using random sampling.

The simple random sampling approach is applied when there are many sample locations and the concentrations are assumed to be homogeneous across a site with respect to the parameter(s) that are going to be analyzed or monitored for. The stratified random sampling approach is useful for sampling drums, evaluating and determining treatment and disposal options, and locating and identifying sources of contamination.

3.3 Sampling Techniques

Sampling is the selection of a representative portion of a larger population or body. The primary objective of all sampling activities is to characterize a site accurately in a way that the impact on human health and the environment can be evaluated appropriately.

3.3.1 Sample Collection Techniques

Sample collection techniques may be either grab or composite. A grab sample is a discrete aliquot representative of a specific location at a given time and collected all at once from one location. The representativeness of such samples is defined by the nature of the materials that are sampled. Samples collected for volatile organic compounds (VOCs) are always grab samples and are never homogenized. Composite samples are non-discrete samples composed of more than one specific aliquot collected at selected sampling locations. Composite samples must be homogenized by mixing prior to putting the sample into containers. Composite samples can, in certain instances, be used as an alternative to analyzing a number of individual grab samples and calculating an average value. Incremental sampling conducted over a grid is a special case of composite sampling and is detailed in SOP #2019, *Incremental Soil Sampling*. Choice of collecting discrete or composite samples is based on project's DQOs.

3.3.2 Homogenization

Mixing of soil and sediment samples is critical to obtain a representative sample. An adequate volume/weight of sample is collected and placed in a stainless steel or Teflon® container, and is thoroughly mixed using a spatula or spoon made of an inert material. Once the sample is thoroughly mixed the sample is placed into sample containers specific for an analysis. Avoid the use of equipment made of plastic or polyvinyl chloride (PVC) when sampling for organic compounds when the reporting limit (RL) is in the parts per billion (ppb) or parts per trillion (ppt) ranges. Refer to SERAS SOP #2012, *Soil Sampling*, for more details on homogenization.

3.3.3 Filtration

In-line filters are used specifically for collecting groundwater samples for dissolved metals analysis and for filtering large volumes of turbid groundwater. Groundwater samples collected for VOCs are typically not filtered due to potential VOC losses. Filtering groundwater is performed to remove silt particulates from samples to prevent interference with the laboratory analysis. The filters used in groundwater sampling are either cartridge type filters inserted into a reusable housing, or are self-contained and disposable. Filter chambers are usually made of polypropylene housing an inert filtering material that removes particles larger than 0.45 micrometers (μm). Refer to SERAS SOP

#2007, *Groundwater Well Sampling* and SERAS SOP #2013, *Surface Water Sampling*, for more details on filtration techniques.

3.4 Quality Assurance /Quality Control Samples

QA/QC samples provide an evaluation of both the laboratory's and the field sampling team's performance. Including QA/QC samples in a sampling design allows for identifying and measuring sources of error potentially introduced from the time of sample container preparation through analysis. The most common QA/QC samples collected in the field are collocated field duplicates, field replicates, equipment blanks, field blanks and trip blanks. Extra volume/mass is collected for a matrix spike/matrix spike duplicate (MS/MSD) at a frequency of 5% (one in 20 samples). Spiking is performed in the laboratory. For additional information or other QA/QC samples pertinent to sample analysis, refer to SERAS SOP #2005, *Quality Assurance/Quality Control Samples*.

Collocated field duplicates may be collected based on site objectives and used to measure variability associated with the sampling process including sample heterogeneity, sampling methodology, and analytical procedures. Field replicates are field samples obtained from one location, homogenized, and divided into separate containers. This is useful for determining whether the sample has been homogenized properly. Equipment blanks (also known as rinsate blanks) are typically collected at a rate of one per day. The equipment blank is used to evaluate the relative cleanliness of non-dedicated equipment.

3.5 Sample Containers, Preservation, Storage and Holding Times

The amount of sample to be collected, the proper sample container type (i.e., glass, plastic), chemical preservation, and storage requirements are dependent on the matrix sampled and the analyses to be conducted. This information is provided in SERAS SOP #2003, *Sample Storage, Preservation, and Handling*. Field personnel need to be cognizant of any short holding times that warrant immediate shipment/transfer to the laboratory.

3.6 Documentation

Field conditions and site activities must be documented. Scribe will be used to document sample locations and generate chain of custody records. Other field measurements not typically entered into Scribe will be documented in a site-specific logbook or in a personal logbook. All sample documentation will be maintained in accordance with SERAS SOP #2002, *Sample Documentation* and SERAS SOP #4005, *Chain of Custody Procedures*.

4.0 RESPONSIBILITIES

4.1 SERAS Task Leaders

Task Leaders (TLs) are responsible for the overall management of the project. Task Leader responsibilities include ensuring that field personnel are well informed of the sampling requirements for a specific project and that SOP and QA/QC procedures stated in the site-specific QAPP are adhered to, issuing a Field Change Form that documents any changes to sampling activities after the QAPP has been approved and maintaining sample documentation.

4.2 SERAS Field Personnel

Field personnel are responsible for reading the QAPP prior to site activities and performing sample collection activities as written. They are responsible for notifying the TL of deviations from sample collection protocols which occurred during the execution of sampling activities. Field staff will collect samples and prepare documentation in accordance with SERAS SOP #2002, *Sample Documentation.* In addition, field personnel are responsible for reading and conforming to the approved site-specific Health and Safety Plan (HASP).

4.3 SERAS Program Manager

The SERAS Program Manager is responsible for the overall technical and financial management of the project.

4.4 SERAS QA/QC Officer

The QA/QC Officer is responsible for reviewing this SOP and ensuring that the information in this SOP is updated on a timely basis. Compliance to this SOP may be monitored by either conducting a field audit or reviewing deliverables prepared by the SERAS TL.

4.5 Health and Safety (H&S) Officer

The H&S Officer is responsible for ensuring that a HASP has been written in conformance with SOP # 3012, *SERAS Health and Safety Guidelines for Field Activities* and approved prior to field activities. Additionally, the H& S Officer is responsible for ensuring that SERAS site personnel's H&S training is current as per SOP # 3006, *SERAS Field Certification Program* and that their medical monitoring is current as per *SERAS SOP #3004, SERAS Medical Monitoring Program.*

STANDARD OPERATING PROCEDURE APPROVAL AND CHANGE FORM

Scientific, Engineering, Response and Analytical Services 2890 Woodbridge Avenue Building 209 Annex Edison New Jersey 08837-3679	
STANDARD OPERATING PROCEDURE	
Title: Sampling Equipment Decontamination	
Approval Date: 12/28/2015	
Effective Date: 12/28/2015	SERAS SOP Number 2006, Rev 1.0
Authors	
Name Christopher French Title SERAS Environmental Technician Signature	Date 12/28/15
Name Christopher Gussman Title SERAS Phytoremediation Scientist Signature	Date 12/28/15
Approvals	
Name Richard Leuser Title SERAS Deputy Program Manager Signature	Date 12/28/2015
Name Deborah Killeen Title SERAS QA/QC Officer Signature	Date 12/23/15
Name Kevin Taylor Title SERAS Program Manager Signature	Date 12/28/15

The top row of this table shows the most recent changes to the controlled document. For previous revision history information, archived versions of this document are maintained by the SERAS QA/QC Officer on the SERAS local area network (LAN).

History	Effective Date
Supersedes: SOP #2006, Revision 0.0, 08/11/94	12/28/15
Complete Rewrite - Updated all sections of the SOP	12/28/15

STANDARD OPERATING PROCEDURES

SAMPLING EQUIPMENT DECONTAMINATION

CONTENTS

1.0 SCOPE AND APPLICATION

2.0 METHOD SUMMARY

3.0 SAMPLE PRESERVATION, CONTAINERS, HANDLING, AND STORAGE

4.0 INTERFERENCES AND POTENTIAL PROBLEMS

5.0 EQUIPMENT/APPARATUS

- 5.1 Decontamination Tools/Supplies
- 5.2 Health and Safety Equipment
- 5.3 Waste Disposal

6.0 REAGENTS

7.0 PROCEDURES

- 7.1 Decontamination Methods
  - 7.1.1 Abrasive Cleaning Methods
  - 7.1.2 Non-Abrasive Cleaning Methods
- 7.2 Field Sampling Equipment Decontamination Procedures
  - 7.2.1 Decontamination Setup
  - 7.2.2 Decontamination Procedures
  - 7.2.3 Post Decontamination Procedures
- 7.3 Decontamination of Earth Moving Equipment/Drilling Equipment and accessories
  - 7.3.1 Decontamination Setup
  - 7.3.2 Decontamination Procedures
  - 7.3.3 Post Decontamination Procedures

8.0 CALCULATIONS

9.0 QUALITY ASSURANCE/QUALITY CONTROL

10.0 DATA VALIDATION

11.0 HEALTH AND SAFETY

UNCONTROLLED COPY

CONTENTS (cont'd)

12.0 REFERENCES

13.0 APPENDICES

A - Tables
B – Figures

SUPERSEDES: SOP #2006, Rev. 0.0, 08/11/94; US EPA Contract EP-W-09-031

UNCONTROLLED COPY

STANDARD OPERATING PROCEDURES

SAMPLING EQUIPMENT DECONTAMINATION

UNCONTROLLED COPY

1.0 SCOPE AND APPLICATION

The purpose of this Standard Operating Procedure (SOP) is to describe the methods for preventing or limiting cross-contamination of samples due to inappropriate or inadequate equipment decontamination and to provide general guidelines for developing decontamination procedures for sampling equipment to be used during environmental investigations as per 29 Code of Federal Regulations (CFR) 1910.120. This SOP does not address personnel decontamination.

A Quality Assurance Project Plan (QAPP) in Uniform Federal Policy (UFP) format describing the project objectives must be prepared prior to deploying for a sampling event. The sampler needs to ensure the methods used are adequate to satisfy the data quality objectives.

The procedures in this SOP may be varied or changed as required, dependent on site conditions, equipment limitations or other procedural limitations. In all instances, the procedures employed must be documented on a Field Change Form and attached to the QAPP. These changes must be documented in the final deliverable.

2.0 METHOD SUMMARY

Removing or neutralizing contaminants from equipment minimizes the possibility of sample cross contamination, reduces or eliminates transfer of contaminants to clean areas, and prevents the mixing of incompatible substances. Some equipment may have specific decontamination procedures that do not follow this SOP. Refer to the user manual for each piece of equipment before utilizing this SOP.

Gross contamination can be removed by physical decontamination procedures. These abrasive and non-abrasive methods include the use of brushes and high and low pressure water cleaning.

The first step is the physical removal of gross contamination on sampling equipment which may include steam or a high pressure water wash. The second step is a soap and water wash that removes the remainder of visible material and residual oils and grease. The third step involves a potable water rinse to remove any detergent, followed by a distilled/deionized water rinse.

For the removal of metals, an acid rinse with a 10% nitric acid solution is used prior to the final distilled/deionized water rinse. For the removal of organics, pesticide grade acetone, methanol or hexane, depending on the specific contaminant of concern, will be applied prior to the final distilled/deionized rinse. Acetone is typically chosen because it is excellent at removing organics, miscible in water, and not a target analyte on the Priority Pollutant List. If acetone is known to be a contaminant of concern or if Target Compound List analysis (which includes acetone) is to be performed, another solvent such as methanol will need to be substituted.

Hexane should be used when the contaminant of concern is polychlorinated biphenyls (PCBs) or in oily media. The solvent must be allowed to evaporate completely and then a final distilled/deionized water rinse is performed. This rinse removes any residual traces of the solvent.

A generalized decontamination procedure is:

1. Physical removal
2. Non-phosphate detergent wash with potable water
3. Potable water rinse
4. Solvent rinse (acetone, hexane, etc.)

5. Air dry
6. 10% nitric acid solution rinse
7. Distilled/deionized water rinse
8. Air dry

In instances in which sampling equipment is being used to collect samples for biological pathogens, the acid is replaced with a 10% bleach solution. Modifications to the standard procedure are required to be documented in the site-specific QAPP, field log book and subsequent reports. All decontamination water is replaced daily at a minimum. If at any point throughout the day the water becomes too dirty, then it is no longer suitable for cleaning and is required to be replaced. All sampling equipment is required to be decontaminated before collecting samples on-site and after use of each piece of sampling equipment.

Waste materials generated from the decontamination processes are referred to as Investigation-Derived Waste (IDW). Management of this waste should be in coordination with SOP#2049, *Investigative-Derived Waste Management.*

3.0 SAMPLE PRESERVATION, CONTAINERS, HANDLING, AND STORAGE

The amount of sample collected, along with the proper sample container type (i.e. glass, plastic), chemical preservation, and storage requirements are dependent upon the matrix sampled and analysis performed. For further information, refer to SERAS SOP #2003, *Sample Storage, Preservation and Handling.*

Sample collection and analysis of decontamination waste generated on-site may be required prior to disposal of decontamination liquids and solids. This should be determined prior to initiation of site activities or as soon as possible thereafter. For more information on handling of IDW, refer to SOP#2049, *Investigative-Derived Waste Management.*

4.0 INTERFERENCES AND POTENTIAL PROBLEMS

Acetone is an excellent solvent since it is miscible with water; however, if volatile organic compounds (VOCs) are to be analyzed, the use of an alternate solvent (methanol, hexane) should be considered since acetone is a compound on the Target Compound List (TCL).

The use of deionized (distilled if only option) water is required for decontamination of sampling equipment. In addition, that water is required to be lab certified, analyte free (specifically for the contaminants of concern). The deionized water must be secured prior to field activities as it is not commonly found local to the site.

The use of solvents and acids on sensitive sampling equipment may cause damage. It is important avoid damaging the equipment. If acids or solvents are utilized, follow health and safety, and waste disposal guidelines.

When decontaminating equipment when temperatures are below freezing, water will freeze in pump spray hoses lines, tanks and in buckets/pails, etc. Additionally, equipment will require longer drying times.

Do not store sampling equipment or reagents used for decontamination near gasoline or any exhaust emissions. Improperly cleaned and prepared sampling equipment can lead to misinterpretation of analytical data due to cross contamination.

UNCONTROLLED COPY

Make sure that the decontamination station is set up as not to compromise a clean environment.

5.0 EQUIPMENT/APPARATUS

Decontamination equipment is selected based on the type of equipment to be cleaned and anticipated contaminants to be removed. For example, soft-bristle scrub brushes or long-handled bottle brushes are used to remove contaminants. Large galvanized wash tubs, stock tanks, buckets, or children's wading pools hold wash and rinse solutions. Large plastic garbage cans or other similar containers lined with plastic bags help segregate contaminated equipment. Drums are used to store liquid and solid site derived waste.

The following standard materials and equipment are recommended for decontamination activities:

•

5.1 Decontamination Tools/Supplies

- Long and short handled brushes
- Bottle brushes, composed of nonmetallic material such as nylon
- Plastic sheeting
- Paper towels
- Plastic or galvanized tubs or buckets
- Pressurized sprayers filled with potable water
- Spray bottles
- Aluminum foil
- Pressure washer
- Garden hose
- Electrical cords
- Work lights (if working in the dark)
- Generator (if using a submersible pump or lights)
- Water tank
- Sump pump

5.2 Health and Safety Equipment

The use of personal protective equipment (PPE), (i.e. safety glasses or splash shield, Tyvek® suits, nitrile gloves, aprons or coveralls, steel toe boots, etc.), is required. Refer to the site-specific Health and Safety Plan (HASP) for site-specific requirements.

5.3 Waste Disposal

- Trash bags
- 55-gallon drums (open and closed top types)
- Metal/plastic buckets/containers for storage and disposal of decontamination solutions

UNCONTROLLED COPY

UNCONTROLLED COPY

6.0 REAGENTS

Table 1 (Appendix A) lists solvents recommended for the elimination of particular chemicals. In general, solvents typically utilized during the decontamination process are:

- 10% Nitric Acid (HNO_3), typically used for inorganic compounds such as metals
- Acetone (pesticide grade)
- Hexane (pesticide grade)
- Methanol (pesticide grade)
- Deionized/Distilled Water that meets ASTM Type II specifications
- Non-Phosphate Detergent
- Potable Water

7.0 PROCEDURES

A decontamination area should be set up prior to sampling. Weather conditions (i.e. hot, cold, rain, snow, etc.) play an important role in the decontamination process. In hot, cold, rainy or snowy conditions, a tent or canopy may be erected around and over the decontamination area. In cold environments, the decontamination may need to occur inside a building or portable heaters may be needed to warm the area under the tent or canopy. In addition, in cold environments the potable and deionized water may freeze. Plan accordingly and consider your working conditions prior to field sampling activities.

A decontamination plan needs to be implemented and includes:

- The number, location, and layout of decontamination stations
- Decontamination equipment
- Selection of appropriate decontamination methods
- Methods of disposal of all investigative derived waste (i.e. PPE, solid and liquid waste, etc.)
- Work practices that minimize contact with potential contaminants.
- Protection procedures for monitoring and sampling equipment (i.e. covering with plastic, etc.)
- Considerations related to weather conditions
- The use of disposable sampling equipment, when possible

7.1 Decontamination Methods

All samples and equipment removed from site must be decontaminated, removing all contamination that may have adhered to the equipment. Various decontamination methods remove contaminants by washing with water and another physical cleaning action. In addition, solvents and/or acids may be used to decontaminate the equipment.

Physical decontamination methods are grouped into two categories, abrasive and non-abrasive methods, and are listed below:

7.1.1 Abrasive Cleaning Methods

Abrasive cleaning methods work by rubbing and wearing away the top layer of the surface containing the contaminant. It involves the use of metal or nylon brushes. The amount and type of contaminants removed will vary with the brush type, length of time brushed,

degree of brush contact, degree of contamination, nature of the contaminant and surface being cleaned.

7.1.2 Non-Abrasive Cleaning Methods

Non-abrasive cleaning methods work by forcing the contaminant off a surface with water pressure (i.e. sprayer or pressure washer).

Low-Pressure Water

This method consists of a pressure sprayer filled with water. The user pumps air into the sprayer tank to create pressure. The water is then discharged through a slender nozzle and hose, cleaning the equipment. Scrubbing with a brush is typically used in conjunction with this method.

High-Pressure Water

This method consists of the use of a pressure washer. The operator controls the directional nozzle which is attached to a high-pressure hose. Operating pressure usually ranges from 400 – 600 pounds per square inch (PSI). Scrubbing with large brushes can be used to aid in the decontamination process.

Rinsing

Contaminants and any remaining solvents and/or acids are removed by thorough rinsing. The rinsing is done either by the use of a sprayer or a pressure washer depending on the equipment being cleaned.

Damp Cloth Removal

In some instances, due to sensitive, non-waterproof equipment or due to the unlikelihood of equipment being contaminated, it is not necessary to conduct an extensive decontamination procedure. For example, air sampling pumps attached to a fence, placed on a drum, or equipment protected by plastic or some other material are not likely to become heavily contaminated.

A damp cloth is used to wipe off any contaminants which may have adhered to equipment through airborne contaminants or from surfaces upon which the equipment was set. The use of a different cleaning cloth for each piece of equipment is required. Upon completion, dispose of all cloths with the site derived waste.

7.2 Field Sampling Equipment Decontamination Procedures

7.2.1 Decontamination Setup

The decontamination area is set up by laying out a section of plastic sheeting large enough for the type and amount of equipment to be decontaminated and for the equipment drop and equipment air drying areas.

UNCONTROLLED COPY

Stage brushes, pressure sprayers, spray bottles (w/appropriate solvents, acids and deionized water), 5-gallon buckets, plastic/galvanized wash tubs, pressure washer (if required) and detergent. Figure 1 (Appendix B) shows the decontamination area overall layout. Section 7.2.2 discusses the decontamination procedures depending on the contaminants of concern for a Site.

Stage the appropriate amount and type of sample bottles and a cooler, for the collection of rinsate samples. For specific rinsate sample information, refer to SERAS SOP #2005, *Quality Assurance/Quality Control Samples.*

7.2.2 Decontamination Procedures

There are various stations of the cleaning process in which the equipment move through that are designed to remove all visible contamination. Stations 1 and 2 are designed to remove all visible contamination. Additional stations after 1 and 2 remove materials that require dissolution and a final rinse. Once the equipment has passed through all stations, it is laid out to air dry.

Decontamination Process for Metals

Station 1 - Place the sampling equipment into the soapy water solution and thoroughly scrub with brushes or pressure washer. When there is no visible residue remaining, transfer to Station 2.

Station 2 - Rinse the equipment in the bucket/tub with potable water. Then remove from the bucket/tub and rinse with the pressure sprayer. When satisfied with the cleanliness of the sampling equipment, transfer to Station 3.

Station 3 - Apply the acid solution and air dry on the plastic sheeting, behind Station 3. Once equipment has fully dried, transfer to Station 4.

Station 4 - Rinse the equipment with the pressure sprayer filled with deionized water. When satisfied the rinsing process is complete, transfer to the equipment drying area. After drying, the equipment should be wrapped in aluminum foil to prevent contamination of the equipment.

Decontamination Process for Organics

Station 1 - Place the sampling equipment into the soapy water solution and thoroughly scrub with brushes. When there is no visible residue remaining, transfer to Station 2

Station 2 - Rinse the equipment in the bucket/tub with potable water. Then remove from the bucket/tub and rinse with the pressure sprayer. When satisfied with the cleanliness of the sampling equipment, transfer to Station 3.

Station 3 - Apply the appropriate solvent or solvents and air dry on the plastic sheeting, behind Station 3. Once equipment has fully dried, transfer to Station 4.

UNCONTROLLED COPY

EXHIBIT B3

Station 4 - Rinse the equipment with the pressure sprayer filled with deionized water. When satisfied the rinsing process is complete, transfer to the equipment drying area.

Decontamination process for Metals and Organics

Station 1 - Place the sampling equipment into the soapy water solution and thoroughly scrub with brushes. When there is no visible residue remaining, transfer to Station 2.

Station 2 - Rinse the equipment in the bucket/tub with potable water. Then remove from the bucket/tub and rinse with the pressure sprayer. When satisfied with the cleanliness of the sampling equipment, transfer to Station 3.

Station 3 - Apply the acid solution and transfer to Station 4.

Station 4 - Rinse the equipment with the pressure sprayer filled with deionized water. When satisfied the rinsing process is complete, transfer to Station 5.

Station 5- Apply the solvent or solvents and air dry on the plastic sheeting behind Station 5. Once equipment has fully dried, transfer to Station 6.

Station 6 - Rinse the equipment with the pressure sprayer filled with deionized water. When satisfied the rinsing process is complete, transfer to the equipment drying area. After drying, the equipment should be wrapped in aluminum foil to prevent contamination of the equipment.

7.2.3 Post Decontamination Procedures

1. Fill out the appropriate labels for the all the various wastes and affix the labels to the drums and/or containers.
2. Clean up the entire work area. Collect solid waste (i.e. nitrile gloves, plastic sheeting, etc.) and store in an appropriate DOT certified drum.
3. Return any remaining unused solvents or acid solutions to their respective labeled containers and properly store.
4. Transfer potable water rinse waste into an appropriate Department of Transportation (DOT) certified drum or container.
5. Transfer the solvent and acid solution rinse water waste into the appropriately labeled DOT certified drums or containers.
6. Using a pressure sprayer, rinse the basins/buckets.
7. Transfer liquid generated from this process into the potable water rinse waste container.
8. Transfer the decontamination brushes into the solid waste container.

UNCONTROLLED COPY

9. Empty the pressure sprayer filled with potable water onto the ground.

10. Return all equipment into their carrying cases or shipping containers.

11. Make arrangements for the pickup of all liquid and solid waste.

For further information on waste disposal, refer to SERAS SOP 2049, *Investigation Derived Waste Management.*

7.3 Decontamination of Earth Moving Equipment/Drilling Equipment and Accessories

The decontamination of earth moving and/or drilling equipment and their accessories will require the use of a pressure washer. In addition, an on-site water supply will need to be available. If an on-site water supply is not available, a water tank along with a pump, hoses and a generator will be required. Finally, a designated area on-site needs to be designated as a decontamination area. Some sites already have a concrete pad set-up for this very purpose. If this is not the case, work with the Work Assignment Manager (WAM) to assign a location for these activities to take place on-site.

An area for decontamination can be built with 4x4 lumber or hay bales, heavy duty plastic sheeting and a sump pump. The area will need to extend at least 4 feet beyond the outer dimensions of the equipment being cleaned. Either slope the decontamination area down to one corner or dig a small hole about 2 feet by 2 feet square and about 2 feet deep to allow for the collection of the decontamination water. Cover the decontamination area with plastic sheeting, wrapping the sides around and under the 4 x 4 lumber or bales of hay. If equipment being decontaminated includes equipment with tracks that might tear through the plastic sheeting, appropriate surfaces need to be included for the equipment to drive on. Finally, place a sump pump into this area and periodically empty the water as necessary, into the appropriately labeled liquid waste drum.

7.3.1 Decontamination Set-up Procedures:

1. Move the equipment into the decontamination area.

2. Stage all the decontamination equipment and supplies (i.e. Pressure Washer, Hoses, PPE, etc.)

3. Connect all hoses and fill the pressure washer with fuel.

4. Dress out in the appropriate PPE (refer to the site-specific HASP).

At a minimum, Tyvek®, safety glasses/goggles, steel toe boots, and nitrile gloves must be worn. If handling any equipment (i.e. drill rods, etc.) work gloves must also be worn to prevent possible injury. For site specific requirements refer to the site-specific HASP.

7.3.2 Decontamination Cleaning Procedures:

1. Physically remove as much of the visible material as possible from the heavy equipment after use and prior to steam cleaning. If contaminated material is suspected as determined by visual observations, instrument readings, or other means, collect material in an appropriate waste container.

UNCONTROLLED COPY

2. Place the heavy equipment on the decontamination pad in the decontamination area. Verify the decontamination pad has no leaks and the sump pump is functioning properly before beginning the decontamination process.

3. Power on the pressure washer and begin cleaning from the top to the bottom. Thoroughly clean parts of the heavy machinery that come into contact with visible material (such as tires, bucket, augers, drill rods, tracks and the back and underneath of the drill rig). Scrub areas with excessive dirt/debris with large bristle brushes. A flat head shovel can be used to aide in the removal of the dirt/debris. Continue cleaning until all visible contamination has been removed. If required, apply solvents and/or acid solutions, rinse with deionized/distilled water and then let air dry.

The use of solvents and/or acid solutions will depend on site specific conditions. Check with the site-specific HASP for further guidance.

7.3.3 Post Decontamination Procedures

1. Fill out the appropriate labels for the all the various wastes and affix the labels to the drums and/or containers

2. Transfer potable water rinse waste into an appropriate Department of Transportation (DOT) certified drum or container. Transfer water from the decontamination pad to the liquid waste drums using a sump pump.

3. Collect and transfer solid waste (i.e. nitrile gloves, plastic sheeting, etc.) to a DOT-certified drum or container.

4. Transfer the solvent and acid solution rinse water waste into the appropriately labeled DOT-certified drums or containers.

5. Make arrangements for the pickup of all liquid and solid waste.

For further information on waste disposal, refer to SERAS SOP 2049, *Investigation Derived Waste Management.*

8.0 CALCULATIONS

This section is not applicable to this SOP.

9.0 QUALITY ASSURANCE/QUALITY CONTROL

Documentation of the decontamination process including date, time and personnel that conducted the decontamination activities must be recorded in a field logbook. Record manufacturer and lot numbers of the reagents used for the decontamination procedures.

A rinsate blank is a specific type of quality control sample associated with the field decontamination process. This sample will provide information on the effectiveness of the decontamination process employed in the field. Rinsate blanks are samples obtained by pouring analyte free deionized water over previously

UNCONTROLLED COPY

decontaminated sampling equipment, testing for residual contamination. The blank water is then collected in sample containers, processed, shipped and analyzed. The rinsate blank is used to assess possible cross-contamination caused by improper decontamination procedures. The most common frequency of collection is one rinsate blank per day per type of sampling device, to meet definitive data objectives. For further information for each analysis, refer to SERAS SOP #2005, *Quality Assurance/Quality Control Samples.*

For information on sample container types and preservation, refer to SERAS SOP #2003, *Sample Storage, Preservation and Handling.*

If sampling equipment requires the use of Teflon® or polyethylene tubing it is required to be disposed of into the on-site waste container and replaced with clean tubing before additional sampling occurs.

10.0 DATA VALIDATION

Data verification (completeness checks) must be conducted to ensure that all data inputs are present for ensuring the availability of sufficient information. These data are essential to providing an accurate and complete final deliverable. Results of quality control samples will be evaluated for possible cross-contamination of improperly or inadequately decontaminated sampling equipment. This data will be utilized to quantify the sample results in accordance with the project's data quality objectives. The SERAS Task Leader (TL) is responsible for completing the UFP-QAPP verification checklist for each project.

11.0 HEALTH AND SAFETY

When working with potentially hazardous materials, follow Occupational Safety and Health (OSHA), U.S. EPA, corporate, and other applicable health and safety procedures.

The decontamination process can pose hazards under certain circumstances. Hazardous substances may be incompatible with decontamination materials. For example, the decontamination solution may react with contaminants to produce heat, explosion, or toxic products. Also, vapors from decontamination solutions may pose a direct health hazard to workers by inhalation, contact, fire, or explosion.

The decontamination solutions must be determined to be acceptable before their use. Decontamination materials may degrade protective clothing or equipment and some solvents can permeate protective clothing. If decontamination materials pose a health hazard, measures are to be taken to protect personnel. Alternatively, substitutions can be made to eliminate the hazard. The choice of respiratory protection based on contaminants of concern from the site may not be appropriate for solvents used in the decontamination process. Material generated from decontamination activities requires proper handling, storage, and disposal. PPE may be required for these activities.

Safety data sheets (SDS) are required for all decontamination solvents or solutions as required by the Hazard Communication Standard (i.e. acetone, alcohol, etc.).

12.0 REFERENCES

Field Sampling Procedures Manual, New Jersey Department of Environmental Protection, August 2005.

Compendium of Superfund Field Operations Methods, EPA 540/p-87/001.

UNCONTROLLED COPY

The Field Branches Quality System and Technical Procedures – Field Equipment Cleaning and Decontamination, USEPA Region IV Science and Ecosystem Support Division, November 2007.

Guidelines for the Selection of Chemical Protective Clothing, Volume 1, Third Edition, American Conference of Governmental Industrial Hygienists, Inc., February 1987.

Occupational Safety and Health Guidance Manual for Hazardous Waste Site Activities, NIOSH/OSHA/USCG/EPA, October 1985.

UNCONTROLLED COPY

APPENDIX A
Tables
SOP #2006
December 2015

UNCONTROLLED COPY

TABLE 1. Soluble Contaminants and Recommended Solvent Rinse

SOLVENT[1]	EXAMPLES OF SOLVENTS	SOLUBLE CONTAMINANTS
Water	Deionized water Potable water	Low-chain hydrocarbons Inorganic compounds Salts Some organic acids and other polar compounds
Dilute Acids	Nitric acid Acetic acid Boric acid	Basic (caustic) compounds (e.g., amines and hydrazine's) and inorganic compounds.
Dilute Bases	Sodium bicarbonate	Acidic compounds Phenol Thiols Some nitro and sulfonic compounds
Organic Solvents [2]	Acetone Alcohols Ketones Aromatics Alkanes (e.g., hexane) Common petroleum products (i.e. fuel, oil, kerosene)	Nonpolar compounds (e.g., some organic compounds)
Organic Solvent[2]	Hexane	PCBs

(1) - Safety data sheets are required for all decontamination solvents or solutions as required by the Hazard Communication Standard

(2) - WARNING: Some organic solvents can permeate and/or degrade protective clothing

UNCONTROLLED COPY

APPENDIX B
Figures
SOP #2006
December 2015

UNCONTROLLED COPY

FIGURE 1. Sampling Equipment Decontamination Area

Configuration for the Removal of Metals

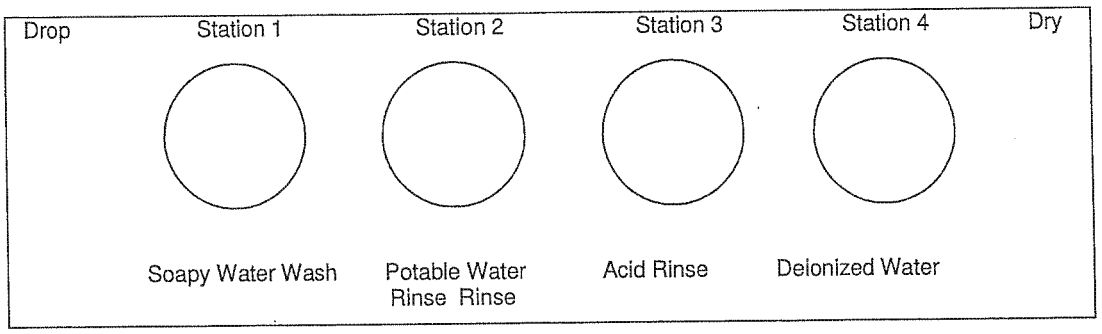

Configuration for the Removal of Organics

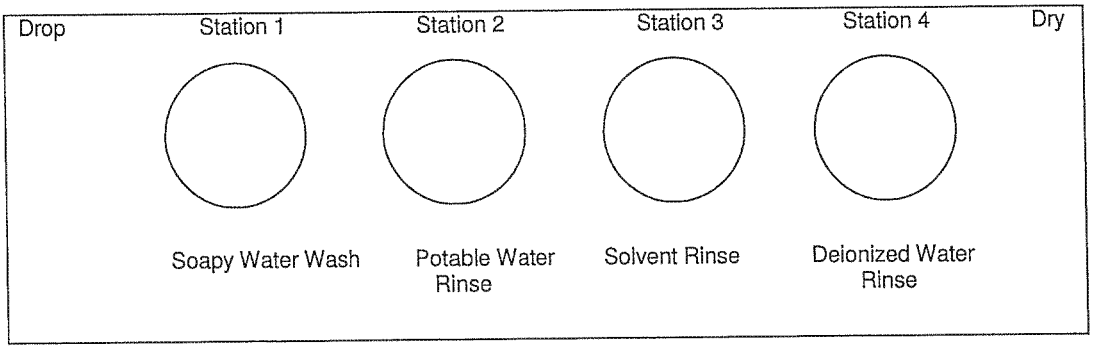

Configuration for the Removal of Metals and Organics

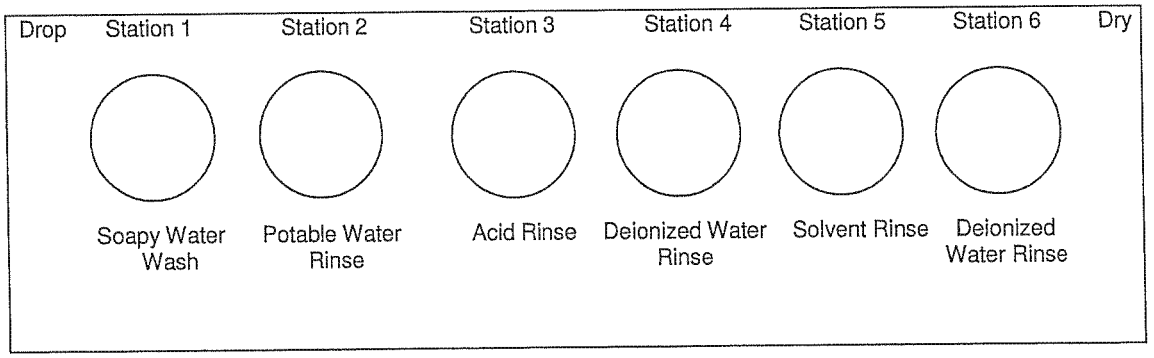

UNCONTROLLED COPY

STANDARD OPERATING PROCEDURES

SOIL SAMPLING

CONTENTS

1.0 SCOPE AND APPLICATION*

2.0 METHOD SUMMARY*

3.0 SAMPLE PRESERVATION, CONTAINERS, HANDLING, AND STORAGE*

4.0 INTERFERENCES AND POTENTIAL PROBLEMS*

5.0 EQUIPMENT/APPARATUS*

6.0 REAGENTS

7.0 PROCEDURES

- 7.1 Preparation*
- 7.2 Sample Collection
  - 7.2.1 Surface Soil Samples*
  - 7.2.2 Sampling at Depth with Augers and Thin Wall Tube Samplers*
  - 7.2.3 Sampling at Depth with a Trier*
  - 7.2.4 Sampling at Depth with a Split Spoon (Barrel) Sampler*
  - 7.2.5 Test Pit/Trench Excavation*
  - 7.2.6 Sampling for VOCs in Soil Using an Encore® Sampler

8.0 CALCULATIONS

9.0 QUALITY ASSURANCE/QUALITY CONTROL*

10.0 DATA VALIDATION

11.0 HEALTH AND SAFETY*

12.0 REFERENCES*

13.0 APPENDICES

A - Figures

*These sections affected by Revision 1.0.

SUPERCEDES: SOP #2012; Revision 0.0; 2/18/00; U.S. EPA Contract 68-C99-223.

1.0 SCOPE AND APPLICATION

The purpose of this Standard Operating Procedure (SOP) is to describe procedures for the collection of representative surface soil samples. Sampling depths are assumed to be those that can be reached without the use of a drill rig, direct-push technology, or other mechanized equipment (except for a back-hoe). Sample depths typically extend up to 1-foot below ground surface. Analysis of soil samples may define the extent of contamination, determine whether concentrations of specific contaminants exceed established action levels, or if the concentrations of contaminants present a risk to public health, welfare, or the environment.

These are standard (i.e., typically applicable) operating procedures which may be varied or changed as required, dependent upon site conditions, equipment limitations, or limitations imposed by the procedure. In all instances, the ultimate procedures employed should be documented and associated with a final report.

Mention of trade names or commercial products does not constitute United States Environmental Protection Agency (U.S. EPA) endorsement or recommendation for use.

2.0 METHOD SUMMARY

Surface soil samples can be used to investigate contaminants that are persistent in the near surface environment. Contaminants that are detected in the near surface environment may extend to considerable depths, may migrate to the groundwater, surface water, the atmosphere, or may enter biological systems.

Soil samples may be collected using a variety of methods and equipment depending on the depth of the desired sample, the type of sample required (discrete or composite), and the soil type. Near-surface soils may be easily sampled using a spade, trowel, and/or scoop. Sampling at greater depths may be performed using a hand auger, continuous-flight auger, trier, split-spoon sampler, or, if required, a backhoe.

3.0 SAMPLE PRESERVATION, CONTAINERS, HANDLING, AND STORAGE

Samples must be cooled and maintained at 4°C and protected from sunlight immediately upon collection to minimize any potential reaction. The amount of sample to be collected, proper sample container type and handling requirements are discussed in the Scientific, Engineering, Response Analytical Services (SERAS) SOP #2003, *Sample Storage, Preservation and Handling.*

4.0 INTERFERENCES AND POTENTIAL PROBLEMS

There are two primary problems associated with soil sampling: 1) cross contamination of samples, and 2) improper sample collection. Cross contamination problems can be eliminated or minimized through the use of dedicated sampling equipment. If this is not possible or practical, decontamination of sampling equipment is necessary. The guidelines for preventing, minimizing and limiting cross contamination of samples are discussed in the Environmental Response Team (ERT)/SERAS SOP #2006, *Sampling Equipment Decontamination*. Improper sample collection procedures can disturb the sample matrix, resulting in volatilization of contaminants, compaction of the sample, or inadequate homogenization of the samples (when required), resulting in variable, non-representative results.

5.0 EQUIPMENT/APPARATUS

Soil sampling equipment includes the following:

- Site maps/plot plan
- Safety equipment, as specified in the site-specific Health and Safety Plan (HASP)
- Traditional survey equipment or global positioning system (GPS)
- Tape measure
- Survey stakes or flags
- Camera and image collection media
- Stainless steel, plastic*, or other appropriate homogenization bucket, bowl or pan
- Appropriate size sample containers
- Ziplock plastic bags
- Site logbook
- Labels
- Chain of Custody records and custody seals
- Field data sheets and sample labels
- Cooler(s)
- Ice
- Vermiculite
- Decontamination supplies/equipment
- Plastic sheeting
- Spade or shovel
- Spatula(s)
- Scoop(s)
- Plastic* or stainless steel spoons
- Trowel(s)
- Continuous flight (screw) auger
- Bucket auger
- Post hole auger
- Extension rods
- T-handle
- Sampling trier
- Thin wall tube sampler
- Split spoon sampler
- Soil core sampler
  - Tubes, points, drive head, drop hammer, puller jack and grip
- Photoionization detector (PID), Flame ionization detector (FID) and/or Respirable Aerosol Monitor (RAM)
- Backhoe (as required)
- En Core® samplers

* Not used when sampling for semivolatile compounds.

6.0 REAGENTS

Decontamination solutions are specified in ERT/SERAS SOP #2006, *Sampling Equipment Decontamination*, and the site specific work plan.

7.0 PROCEDURES

7.1 Preparation

1. Determine the extent of the sampling effort, the analytes to be determined, the sampling methods to be employed, and the types and amounts of equipment and supplies required to accomplish the assignment.

2. Obtain the necessary sampling and air monitoring equipment.

3. Prepare schedules and coordinate with staff, client, and regulatory agencies, as appropriate.

4. Perform a general site reconnaissance survey prior to site entry in accordance with the site specific HASP.

5. Use stakes or flags to identify and mark all sampling locations. Specific site factors, including extent and nature of contamination, should be considered when selecting sample locations. If required, the proposed locations may be adjusted based on site access, property boundaries, and surface obstructions. All staked locations should be utility-cleared prior to soil sampling; utility clearances must be confirmed before beginning intrusive work.

6. Pre-clean and decontaminate equipment in accordance with the site specific work plan, and ensure that it is in working order.

7.2 Sample Collection

7.2.1 Surface Soil Samples

The collection of samples from near-surface soil can be accomplished with tools such as spades, shovels, trowels, and scoops. The over-burden or over-lying surface material is removed to the required depth and a stainless steel or plastic scoop is used to collect the sample. Plastic utensils are not to be used when sampling for semivolatile compounds.

This method can be used in most soil types but is limited to sampling at or near the ground surface. Accurate, representative samples can be collected by this procedure depending on the care and precision demonstrated by the sample team member. A flat, pointed mason trowel to cut a block of the desired soil is helpful when undisturbed profiles are required. Tools plated with chrome or other materials must not be used.

The following procedure is used to collect surface soil samples:

1. If volatile organic compound (VOC) contamination is suspected, use a PID to monitor the sampler's breathing zone during soil sampling activities.

2. Using a pre-cleaned, stainless steel scoop, plastic spoon, or trowel, remove and discard sticks, rocks, vegetation and other debris from the sampling area.

3. Accumulate an adequate volume of soil, based on the type(s) of analyses to be performed, in

a stainless, plastic or other appropriate container.

4. If volatile organic analysis is to be performed, immediately transfer the sample directly into an appropriate, labeled sample container with a stainless steel spoon, or equivalent, and secure the cap tightly to ensure that the volatile fraction is not compromised. Thoroughly mix the remainder of the soil to obtain a sample that is representative of the entire sampling interval. Then, either place the sample into appropriate, labeled containers and secure the caps tightly, or, if composite samples are to be collected, place a sample from another sampling interval or location into the homogenization container and mix thoroughly. When compositing is complete, place the sample into appropriate, labeled containers and secure the caps tightly.

7.2.2 Sampling at Depth with Augers and Thin Wall Tube Samplers

This system consists of an auger, head, a series of extensions, and a "T" handle (Figure 1, Appendix A). The auger is used to bore a hole to a desired sampling depth, and is then withdrawn. The sample may be collected directly from the auger head. If additional sample volume is required, multiple grabs at the same depth are made. If a core sample is to be collected, the auger head is then replaced with a tube auger. The system is then lowered down the borehole, and driven into the soil to the completion depth. The system is withdrawn and the core is collected.

Several types of augers are available; these include bucket or tube type, and continuous flight (screw) or post-hole augers. Bucket or tube type augers are better for direct sample recovery because a large volume of sample can be collected from a discrete area in a short period of time. When continuous flight or post-hole augers are used, the sample can be collected directly from the flights or from the borehole cuttings. The continuous flight or post-hole augers are satisfactory when a composite of the complete soil column is desired, but have limited utility for sample collection as they cannot be used to sample a discrete depth.

The following procedure is used for collecting soil samples with an auger:

1. Attach the auger head to an extension rod and attach the "T" handle.

2. Clear the area to be sampled of surface debris (e.g., twigs, rocks, litter). It may be advisable to remove a thin layer of surface soil for an area approximately six inches in radius around the sampling location.

3. Begin augering, periodically removing and depositing accumulated soils onto a plastic sheet spread near the hole. This prevents the accidental brushing of loose material back down the borehole when removing the auger or adding extension rods. It also facilitates refilling the hole, and avoids possible contamination of the surrounding area.

4. After reaching the desired depth, slowly and carefully remove the auger from the hole. When sampling directly from the auger head, proceed to Step 10.

5. Remove auger tip from the extension rods and replace with a tube sampler. Install the

proper cutting tip.

6. Carefully lower the tube sampler down the borehole. Gradually force the tube sampler into the soil. Do not scrape the borehole sides. Avoid hammering the rods as the vibrations may cause the boring walls to collapse.

7. Remove the tube sampler and unscrew the extension rods.

8. Remove the cutting tip and the core from the device.

9. Discard the top of the core (approximately 1 inch), as this possibly represents material collected before penetration of the layer of concern. Place the core or a discrete portion of the core into the appropriate labeled sample container using a clean, decontaminated stainless steel spoon. If required, homogenize the sample as described in Step 10.

10. If VOC analysis is to be performed, transfer the sample directly from the auger head into an appropriate, labeled sample container with a stainless steel spoon, or equivalent and secure the cap tightly.

11. If another sample is to be collected in the same hole, but at a greater depth, reattach the auger head to the drill assembly, and follow steps 3 through 11, making sure to decontaminate the auger head and tube sampler between samples.

12. Abandon the hole according to applicable state regulations.

7.2.3 Sampling at Depth with a Trier

The system consists of a trier and a "T" handle. The auger is driven into the soil to be sampled and used to extract a core sample from the appropriate depth.

The following procedure is used to collect soil samples with a sampling trier:

1. Insert the trier (Figure 2, Appendix A) into the material to be sampled at a zero degree to forty-five degree (0° to 45°) angle from the soil surface plane. This orientation minimizes the spillage of sample.

2. Rotate the trier once or twice to cut a core of material.

3. Slowly withdraw the trier, making sure that the slot is facing upward.

4. If VOC analyses are required, transfer the sample directly from the trier into an appropriate, labeled sample container with a stainless steel spoon, or equivalent device and secure the cap tightly. Place the remainder of the sample into a stainless steel, plastic, or other appropriate homogenization container and mix thoroughly to obtain a sample that is representative of the entire sampling interval. Then, either place the sample into appropriate, labeled containers and secure the caps tightly; if composite samples are to be collected, place a sample from another sampling interval into the

homogenization container and mix thoroughly. When compositing is complete, place the sample into appropriate, labeled containers and secure the caps tightly.

7.2.4 Sampling at Depth with a Split Spoon (Barrel) Sampler

Split spoon sampling is generally used to collect undisturbed soil cores of 18- or 24- inches in length. A series of consecutive cores may be extracted with a split spoon sampler to give a complete soil column profile, or an auger may be used to drill down to the desired depth for sampling. The split spoon is then driven to its sampling depth through the bottom of the augured hole and the core extracted.

When split spoon sampling is performed to gain geologic information, all work should be performed in accordance with American Society for Testing and Materials (ASTM) D1586-99, "*Standard Test Method for Penetration Test and Split-Barrel Sampling of Soils*".

The following procedures are used for collecting soil samples with a split spoon:

1. Assemble the sampler by aligning both sides of the barrel and then screwing the drive shoe on the bottom and the head piece on top.

2. Place the sampler at a 90 degree (90°) angle to the sample material.

3. Using a well ring, drive the sampler. Do not drive past the bottom of the head piece or compression of the sample will result.

4. Record in the site logbook or on field data sheets the length of the tube used to penetrate the material being sampled, and the number of blows required to obtain the sample.

5. Withdraw the sampler, and open it by unscrewing the bit and head, and then splitting the barrel. The amount of recovery and soil type should be recorded on the boring log. If a split sample is desired, a cleaned, stainless steel knife should be used to divide the tube contents in half, longitudinally. This sampler is typically available in 2- and 3.5-inch diameter tubes. A larger barrel (diameter and/or length) may be necessary to obtain the required sample volume.

6. Without disturbing the core, transfer it to the appropriately labeled sample container(s) and seal tightly. Place the remainder of the sample into a stainless steel, plastic, or appropriate homogenization container, and mix thoroughly to obtain a sample that is representative of the entire sampling interval. Then, either place the sample into the appropriate, labeled containers and secure the caps tightly, or if composite samples are to be collected, place a sample from another sampling interval or location into the homogenization container and mix thoroughly. When compositing is complete, place the sample into the appropriate, labeled containers and secure the caps tightly.

7. Abandon the hole according to applicable state regulations.

7.2.5 Test Pit/Trench Excavation

A backhoe can be used to remove sections of soil when a detailed examination of stratigraphy and soil characteristics is required. The following procedures are used for collecting soil samples from test pits or trenches:

1. Prior to any excavation with a backhoe, it is imperative to ensure that all sampling locations are clear of overhead and buried utilities.

2. Review the site specific HASP and ensure that all safety precautions including appropriate monitoring equipment are installed as required.

3. Using the backhoe, excavate a trench approximately three feet wide and approximately one foot deep below the cleared sampling location. Place excavated soils on plastic sheets. Trenches greater than five feet deep must be sloped or protected by a shoring system, as required by Occupational Safety and Health Administration (OSHA) regulations.

4. A shovel is used to remove a one to two inch layer of soil from the vertical face of the pit where sampling is to be done.

5. Samples are taken using a trowel, scoop, or coring device at the desired intervals. Be sure to scrape the vertical face at the point of sampling to remove any soil that may have fallen from above, and to expose fresh soil for sampling. In many instances, samples can be collected directly from the backhoe bucket.

6. If VOC analyses are required, transfer the sample into an appropriate, labeled sample container with a stainless steel spoon, or equivalent and secure the cap tightly. Place the remainder of the sample into a stainless steel, plastic, or other appropriate homogenization container, and mix thoroughly to obtain a sample representative of the entire sampling interval. Then, either place the sample into appropriate, labeled containers and secure the caps tightly; or, if composite samples are to be collected, place a sample from another sampling interval into the homogenization container and mix thoroughly. When compositing is complete, place the sample into the appropriate, labeled containers and secure the caps tightly.

7. Abandon the pit or excavation according to applicable state regulations.

7.2.6 Sampling for VOCs in Soil Using an En Core® Sampler

An En Core® sampler is a single-use device designed to collect and transport samples to the laboratory. The En Core® sampler is made of an inert composite polymer and reduces the open-air handling of soil samples in the field and in the laboratory; thereby, minimizing losses of VOCs.

1. Assemble the coring body, plunger rod and T-handle according to the instructions provided with the En Core® sampler.

2. Turn the T-handle with the T-up and the coring body down and push the sampler into the soil until the coring body is completely full. Remove the sampler from the soil. Wipe excess soil from the coring body exterior.

3. Cap the coring body while it is still on the T-handle. Push the cap over the flat area of the ridge. Be sure that the cap is seated properly to seal the sampler. Push and cap to lock arm in place.

4. Remove the capped sampler by depressing the locking lever on the T-handle while twisting and pulling the sampler from the T-handle.

5. Attach the label to the coring body cap, place in a plastic zippered bag, seal and put on ice.

Generally, three En Core® samplers are required for each sample location. These samplers are shipped to the laboratory where the cap is removed and the soil samples are preserved with methanol or sodium bisulfate.

8.0 CALCULATIONS

This section is not applicable to this SOP.

9.0 QUALITY ASSURANCE/QUALITY CONTROL

There are no specific quality assurance (QA) activities that apply to the implementation of these procedures. However, the following general QA procedures apply:

2. All data must be documented in site logbooks or on field data sheets. At a minimum, the following data is recorded:

   Sampler's name and affiliation with project
   Sample number
   Sample location
   Sample depth
   Approximate volume of sample collected
   Type of analyses to be performed
   Sample description
   Date and time of sample collection
   Weather conditions at time of sampling
   Method of sample collection
   Sketch of sample location

2. All instrumentation must be operated in accordance with applicable SOPs and/or the manufacturer's operating instructions, unless otherwise specified in the work plan. Equipment checkout and calibration activities must occur prior to sampling/operation, and must be documented.

3. The types of quality control (QC) samples to be collected in the field shall be documented in the site-specific Work Plan.

10.0 DATA VALIDATION

This section is not applicable to this SOP.

11.0 HEALTH AND SAFETY

When working with potentially hazardous materials, follow U.S. EPA, OSHA and corporate health and safety procedures, in addition to the procedures specified in the site specific HASP.

12.0 REFERENCES

Mason, B.J. 1983. *Preparation of Soil Sampling Protocol: Technique and Strategies.* EPA-600/4-83-020.

Barth, D.S. and B.J. Mason. 1989. *Soil Sampling Quality Assurance User's Guide.* EPA-600/8-89-046.

U.S. Environmental Protection Agency. 1984. *Characterization of Hazardous Waste Sites - A Methods Manual: Volume II.* Available Sampling Methods, Second Edition. EPA-600/4-84-076.

de Vera, ER, B.P. Simmons, R.D. Stephen, and D.L. Storm. 1980. *Samplers and Sampling Procedures for Hazardous Waste Streams.* EPA-600/2-80-018.

American Society for Testing and Materials. *Standard Test Method for Penetration Test and Split-Barrel Sampling of Soils.* Method D 1586-99.

En Novative Technologies, Inc. 2001. *En Core® Sampler Sampling Procedures.* Web site access. March 13, 2001.

APPENDIX A
Figures
SOP #2012
July 2001

FIGURE 1. Sampling Augers

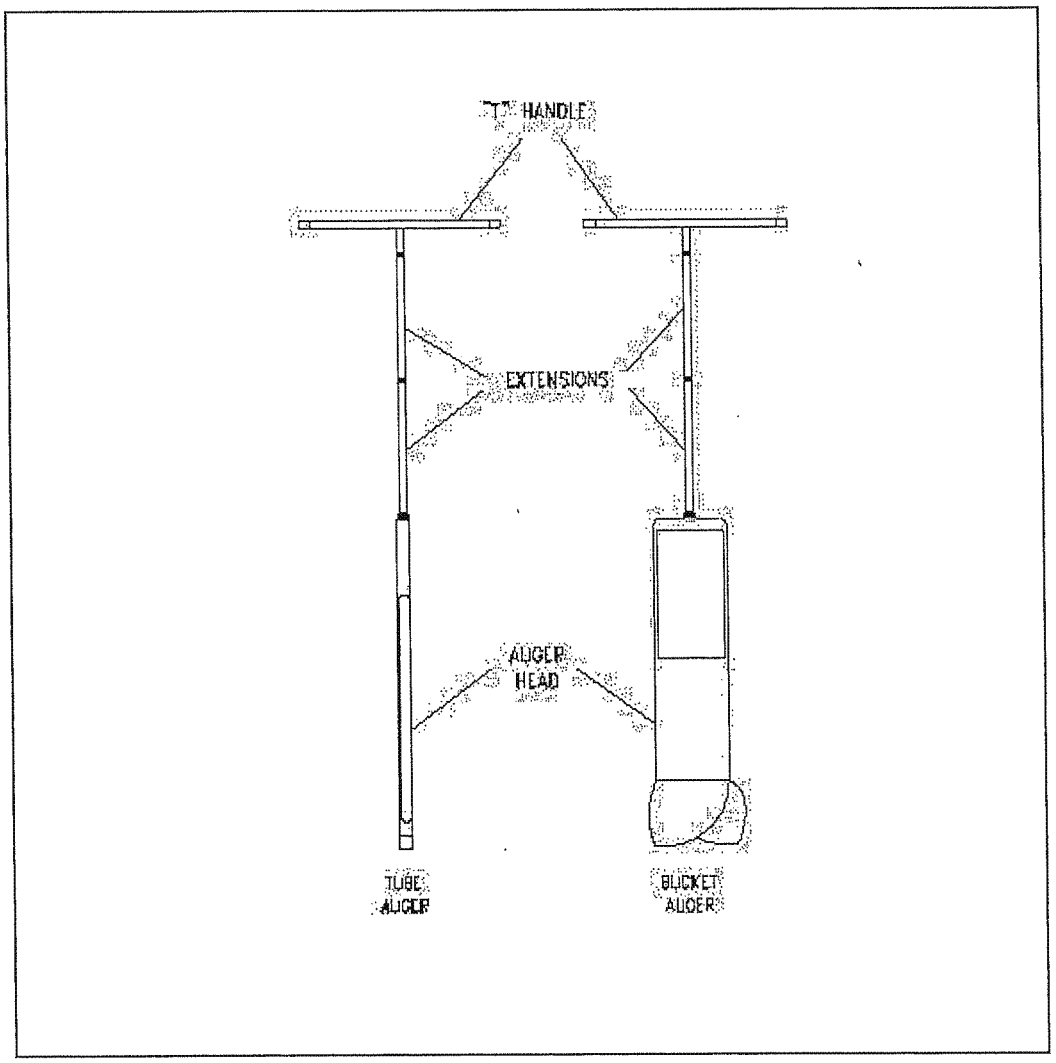

FIGURE 2. Sampling Trier

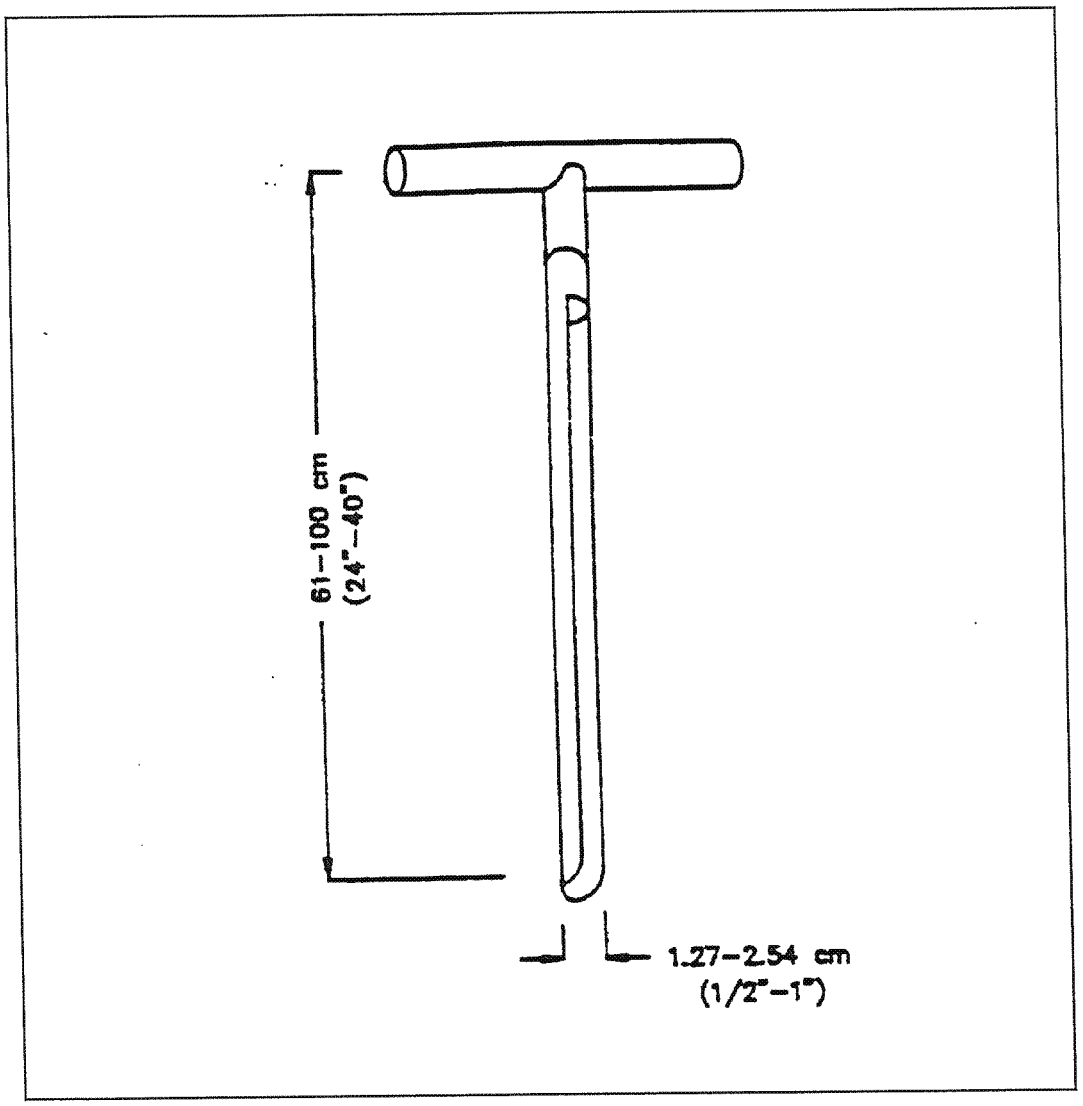
61–100 cm
(24"–40")
1.27–2.54 cm
(1/2"–1")

STANDARD OPERATING PROCEDURE APPROVAL AND CHANGE FORM

Scientific, Engineering, Response and Analytical Services 2890 Woodbridge Avenue Building 209 Annex Edison New Jersey 08837-3679	
STANDARD OPERATING PROCEDURE	
Title: Operation of the Model 6620 DT Geoprobe	
Approval Date: 06/25/2015	
Effective Date: 06/25/2015	SERAS SOP Number: 2050, Rev 1.0
Authors	
Name Christopher French Title SERAS Environmental Technician Signature	Date 6/23/15
Name Joseph Policastri Title SERAS Environmental Technician Signature Jean Bo for Joseph Policastri	Date 6/23/15
Approvals	
Name Richard Leuser Title SERAS Deputy Program Manager Signature	Date 6/23/2015
Name Title Signature	Date
Name Deb Killeen Title SERAS QA/QC Officer Signature	Date 6/23/15
Name Kevin Taylor Title SERAS Program Manager Signature	Date 6/23/15

The top row of this table shows the most recent changes to the controlled document. For previous revision history information, archived versions of this document are maintained by the SERAS QA/QC Officer on the SERAS local area network (LAN).

History	Effective Date
Supersedes: SOP #2050, Revision 0.0, dated 10/24/03	06/25/15

STANDARD OPERATING PROCEDURES

OPERATION OF THE MODEL 6620 DT GEOPROBE

UNCONTROLLED COPY

CONTENTS

1.0 SCOPE AND APPLICATION

2.0 METHOD SUMMARY

3.0 SAMPLE PRESERVATION, CONTAINERS, HANDLING, AND STORAGE

4.0 INTERFERENCES AND POTENTIAL PROBLEMS

5.0 EQUIPMENT/APPARATUS

6.0 REAGENTS

7.0 PROCEDURES

- 7.1 Preparation
- 7.2 Geoprobe Setup
- 7.3 Drilling Through Pavement or Concrete
- 7.4 Probing
- 7.5 Probing - Adding Rods
- 7.6 Probing - Pulling Rods
- 7.7 Soil Gas Sampling – Implant Installation
- 7.8 Soil Gas Sampling – Post Run Tubing (PRT) retractable point holder
- 7.9 Soil Sampling – MC5 system
- 7.10 Groundwater Sampling – SP 16
- 7.11 Installation of Geoprobe Monitor Wells
- 7.12 Hollow Stem Auger Attachment

8.0 CALCULATIONS

9.0 QUALITY ASSURANCE/QUALITY CONTROL

10.0 DATA VALIDATION

11.0 HEALTH AND SAFETY

12.0 REFERENCES

13.0 APPENDIX

A –FIGURES

Complete Rewrite: Supersedes SOP #2050; Revision 0.0; 10/24/03, U.S. EPA Contract 68-C99-223

STANDARD OPERATING PROCEDURES

OPERATION OF THE MODEL 6620 DT GEOPROBE

Draft

1.0 SCOPE AND APPLICATION

The purpose of this Standard Operating Procedure (SOP) is to describe basic procedures for collecting representative soil, soil-gas, and groundwater samples using the Model 6620DT Geoprobe. This SOP is not a substitute for the *Geoprobe® Model 6620DT Direct Push Machine Owner's Manual,* which should be consulted for additional details and required maintenance procedures.

A Quality Assurance Project Plan (QAPP) in Uniform Federal Policy (UFP) format describing the project objectives must be prepared prior to deploying for a sampling event. The sampler needs to ensure that the methods used are adequate to satisfy the data quality objectives listed in the QAPP for a particular site.

The procedures in this SOP may be varied or changed as required, dependent on site conditions, equipment limitations or other procedural limitations. In all instances, the procedures employed must be documented on a Field Change Form and attached to the QAPP. These changes must be documented in the final deliverable.

2.0 METHOD SUMMARY

The Geoprobe is hydraulically powered and mounted on an all surface track unit which is controlled remotely. To begin the probing process the foot of the Geoprobe is positioned on the ground over the sampling location with the probe foot then lowered making contact with the ground surface. Then the hammer mechanism is raised and a probe rod, cutting shoe/drive point and drive cap are positioned below. The hammer mechanism is then lowered along with hydraulic down force pushing the rod into the ground. This process will continue until the entire length of the rod is advanced. Depending on the target depth multiple rod sections may be added. Depth of penetration varies significantly depending on the soil conditions as well as the diameter of tooling being advanced. This unit has under favorable conditions probed to 100 feet below ground surface (bgs). Specific tooling components of the model 6620 DT Geoprobe are shown in the Geoprobe manual and in Appendix A.

Soil samples are collected with the Geoprobe designed MC5 soil sampling system. This system consists of a cutting shoe, core catcher, closed piston point, light weight rod, MC5 liner, MC5 drive cap, drive head and a MC5 thread-less drive cap. The macro core is pushed and hammered to a specified depth collecting a sample within the core liner which is retained by the core catcher at the bottom of the core liner. Upon retrieval, the core liner is removed from the MC5 sampler assembly by removing the cutting shoe and then simply sliding out the core liner. In some instances the core may become lodged within the macro core assembly at which the core liner extruder will be used to force the core liner out. The core liner is then placed on the Geoprobe cutting bar and the Geoprobe cutting tool is then used to extract the entire top portion revealing the sample. The sample is then logged, screened and collected.

Soil gas samples are collected in one of two ways. One method involves installing a Geoprobe soil gas implant to a desired depth and evacuating a sufficient volume of air before sampling. The sample will then be collected through Teflon tubing by way of a soil gas box and a sampling pump (e.g., SKC) into a Tedlar bag or directly into a SUMMA canister. The other method involves collecting a sample through tubing attached to an adaptor at the bottom probe section at the desired depth. The sample will then be collected through Teflon tubing by way of a soil gas box and sampling pump into a Tedlar bag or directly into a SUMMA canister.

Groundwater samples are collected in various ways. One common method is to advance the probe rods to the desired depth, then insert a combination of polyvinyl chloride (PVC) screen and riser inside the probe rods to down to the specified depth. The length of screen and riser should be equal to length of probe rods used. An expendable point sits at the bottom of the probe rods. When the probe rods are retrieved the expendable point, attached to the screen, remains at depth allowing the screen/riser to remain in place while the probe rods are removed. Sand is then poured into the annular space outside of the PVC screen to approximately two feet above the screen. Bentonite is then poured in, filling the remainder of the annular space, to ground surface. In some instances, a grout machine is used to administer the bentonite mixture to complete the well.

Another common sampling method utilizes the Geoprobe SP-16 sampler for discrete sampling or temporary well point installation. This set up requires an expendable point, sampling sheath, inner screen (either PVC or stainless steel), drive head and a drive cap. Once the SP-16 is advanced to the desired depth, the probe rods are retracted approximately 30 inches to deploy the screen into the groundwater. A series of small-diameter-inner rods are then used to ensure the screen has in fact deployed. For both methods a peristaltic pump, bladder pump or check valve is then used to purge a calculated volume of water as per sampling protocols. Once this is achieved, a sample will be collected.

3.0 SAMPLE PRESERVATION, CONTAINERS, HANDLING AND STORAGE

The volume of sample to be collected, the proper container type (i.e., glass, plastic), chemical preservation and storage requirements are determined by the matrix being sampled and the parameter(s) of interest. This is discussed in Scientific Engineering Response & Analytical Contract (SERAS) SOP # 2003, *Sample Storage, Preservation and Handling* for the soil and water matrices. Guidelines for the containment, preservation, handling, and storage of soil gas samples are described in SERAS SOP # 2042, *Soil Gas Sampling*.

Applicable SERAS SOPs include SOP # 2012 - *Soil Sampling,* SOP # 2007 - *Groundwater Well Sampling,* SOP # 2042 - *Soil Gas Sampling* and SOP #2048 - *Monitoring Well Installation.*

4.0 INTERFERENCES AND POTENTIAL PROBLEMS

A preliminary site survey should identify areas to be avoided with the Geoprobe. Always have the locations containing buried utilities cleared by the state-certified clearing service. When operating on private property it may also be necessary to employ a utility locating contractor to identify on-site buried utilities.

Decontamination of all Geoprobe tooling (i.e. probe rods, macro cores, cutting shoes, etc.) that comes into contact with the soil is necessary to prevent cross-contamination of samples.

Obtaining a sufficient volume of soil for multiple analyses from one sample location or a discrete depth may present a problem. In some instances a limited volume of soil is recovered. Since it is not possible to re-enter the same hole and collect additional soil from the same depth interval an adjacent borehole in a new hole must be drilled to collect the additional sample. When multiple analyses are to be performed on soil samples collected with the Geoprobe the relative importance of the analyses should be identified. This ensures that the limited sample volume will be used for the most crucial analyses.

5.0 EQUIPMENT/APPARATUS

DRAFT

OPERATION OF THE MODEL 6620 DT GEOPROBE

UNCONTROLLED COPY

Listed below is the sampling equipment used in conjunction with the Geoprobe.

- Threaded probe rods (60-inch, 48-inch and 36-inch)
- Drive caps
- Pull caps
- Probe drive rod
- Core liner extruder
- Expendable point holders
- Expendable drive points
- Solid drive points
- Extension rods
- Extension rod couplers
- Extension rod handle
- Rod pull bar
- Macro core barrels
- Carbide-tipped drill bit
- Well mini-bailer
- Check valve
- Teflon tubing
- Gas sampling adaptor and cap
- Teflon tape
- Neoprene O - rings
- Core liners
- Vinyl end caps
- Sample extruder
- Wire brush
- Brush adapters
- Cleaning brushes
- Frost augers
- Well installation equipment
- PVC screen and riser
- Pipe wrenches
- Silica sand
- Bentonite pellets
- Macro core wrench
- Dual tube system
- Hollow stem augers
- Concrete core drill
- Grout Machine
- Drive heads
- Cutting shoes
- Bladder pump

UNCONTROLLED COPY

6.0 REAGENTS

Reagents required for sample preservation are specified in Table 1, Appendix A, of the SERAS SOP # 2003, *Sample Storage, Preservation and Handling*. Decontamination solutions are specified in the SERAS SOP # 2006, *Sampling Equipment Decontamination.*

7.0 PROCEDURES

Portions of the following sections have been condensed from the Model 6620DT *Geoprobe® Owner's Manual.* Refer to this manual for more detailed information concerning equipment specifications, general maintenance, tools, throttle control, clutch pump, 6620DT hammer, and trouble-shooting. A controlled copy of this manual is maintained with the Geoprobe and is on file in the Quality Assurance (QA) office.

Warning: Only trained individuals are authorized to operate the Geoprobe equipment. Never operate the equipment without proper training and the proper safety equipment.

7.1 Preparation

1. Determine the extent of the sampling effort, sample matrices, types, volume required and equipment and supplies required to complete the task.

2. Obtain and organize the necessary sampling and monitoring equipment.

3. Perform a general site survey prior to site entry in accordance with the site-specific Health and Safety Plan (HASP).

4. Use stakes or flagging to identify all sampling locations. All sample locations must be cleared of utilities prior to sampling.

7.2 Geoprobe Setup

1. Using the remote control, guide the Geoprobe to the probing location and then turn the machine off and place the remote control back on the holder.

2. Start the Geoprobe from the ignition utilizing the key and position the probe foot on the target and lower the foot to the ground surface.

3. Lower the outriggers to the ground surface to stabilize the Geoprobe.

4. Raise the winch derrick while lowering the winch cable simultaneously until fully raised.

5. Raise the Geoprobe hammer until it is fully retracted.

6. Assemble and position probe rods and other necessary tooling underneath the hammer and begin probing.

Important: Check for overhead clearance when moving or operating the Geoprobe. with the winch derrick in the fully retracted position. Maintain a 10-foot distance (minimum) from overhead electrical wires.

Important: The Geoprobe should be operated in a level, as possible, position utilizing the downriggers.

7.3 Drilling Through Surface Pavement or Concrete

1. Position the Geoprobe over the drilling location.
2. Adjust the Geoprobe to the exact location using the foot up/down, fold, in/out and radius shift controls.
3. Remove the hammer anvil and retaining ring and insert the carbide-tipped drill bit into hammer securing with the attached retainer ring.
4. Lower the bit onto the ground surface and hammer penetrating the pavement by several inches.
5. With the bit now into the pavement hammer and rotate the bit by pushing the lever to the left and down until the entire section of pavement has been breached.
6. The bit is now retracted and removed from the Geoprobe.
7. Re-install the hammer anvil and retainer ring for normal Geoprobe drilling operations.

Important: Be sure to re-install the anvil and retainer ring before probing as damage to the hammer may result.

7.4 Probing

1. Position the Geoprobe over the drilling location.
2. Adjust the Geoprobe to the exact location using the foot up/down, fold, in/out and radius shift.
3. Lower the outriggers to the ground surface until the Geoprobe is sufficiently stable.
4. Raise the winch derrick while lowering the winch cable simultaneously until fully raised.
5. Raise the Geoprobe hammering mechanism until fully retracted.
6. Assemble and position probe rods and other necessary tooling underneath the hammer and begin probing.

UNCONTROLLED COPY

Important: Positioning the first probe rod vertically is critical to maintaining the vertical alignment of the borehole. Therefore, both the probe rod and the probe cylinder shaft must be in a true vertical position.

Important: When advancing rods, always keep the probe rods parallel to the probe cylinder shaft. This is done by making minor adjustments with the fold control. Failure to keep probe rods parallel to the probe cylinder shaft will result in increased difficulty in achieving the desired sampling depth and possibly damaging the drive rods or probe hammering mechanism.

7.5 Probing - Adding Rods

1. Standard probe rods vary in length (i.e. 3 foot (ft), 4ft and 5 ft). If the desired depth is more than the rod length, another rod must be threaded onto the rod that has been driven into the ground.
2. Fully extend the hammering mechanism.
3. Remove the drive cap and thread an additional drive rod.
4. Continue this process as mentioned above until the desired depth is reached.

7.6 Probing - Pulling Rods

1. Once the drive rods have been driven to depth, the probe rods can be extracted using the Geoprobe.
2. Fully lower the hammering mechanism.
3. Remove the drive cap and attach a pull cap or pull bar depending on the drive rods used.
4. Attach the latch on the hammering mechanism or pull bar and extract the rods by raising the probe.
5. Once the probe is fully extended attached a pipe wrench to the bottom most portion of the rod then remove the latch or pull bar and unthread the drive rod.

   Important: If the latch will not close over the pull cap, adjust the derrick assembly by using the extend control. This will allow you to center the pull cap directly below the hammer latch.

6. Repeat this process until all rods are extracted.
7. Decontaminate all portions of the equipment that have been in contact with the soil, soil gas or groundwater.

UNCONTROLLED COPY

UNCONTROLLED COPY

7.7 Soil Gas Sampling - Implant installation

1. Attach the sampling implant to the anchor.
2. Feed the Teflon tubing through the probe rod and attach to the implant.
3. Install the drive cap and advance the rod assembly down to the desired depth.
4. Once at depth retract all rods leaving the implant at the desired depth.
5. Pour glass beads down the probe hole to achieve the desired thickness and then fill the remaining annular space with bentonite pellets.

7.8 Soil Gas Sampling – Post Run Tubing (PRT) retractable point holder

1. Attach the PRT retractable point holder to the probe rod and install the drive cap.
2. Drive the probe rod assembly to the desired depth and retract the rod approximately six inches to reveal the PRT screen.
3. Position the Geoprobe® to allow enough room to work.
4. Secure the post run tubing (PRT) adapter with an "O"-ring to the selected tubing.
5. Insert the adapter end of the tubing down the inside diameter of the probe rods.
6. Feed the tubing down the hole until it hits bottom on the expendable point holder. Cut the tubing approximately two feet above the top probe rod.
7. Grasp excess tubing and apply some downward pressure while turning it in a counter-clockwise motion to engage the adapter threads with the point holder.
8. Pull up lightly on the tubing to test engagement of threads.
9. Follow SERAS SOP # 2042 – *Soil Gas Sampling* to collect a soil gas sample.
10. After collecting a sample, disconnect the tubing from the sampling system.
11. Pull up firmly on the tubing until it releases from the adapter at the bottom of the hole.
12. Extract the probe rod assembly (outlined in Section 7.6).
13. Inspect the "O"-ring at the base of the adapter to verify that proper sealing was achieved during sampling. The "O"-ring should be compressed.

Note: If the "O"-ring is not compressed, vapors from within the probe sections may have been collected rather than vapors from the intended sample interval.

7.9 Soil Sampling – MC5 System

1. Follow procedures outlined in Sections 7.1 through 7.6.

2. Assemble the MC5 sampler:

   - Place a piston point into the cutting shoe.
   - Attach a core catcher to the core liner.
   - Insert the inner drive rod into the core liner and through the core catcher.
   - Attach the cutting shoe to the core catcher.
   - Insert the core liner with all the components listed above and thread into the MC5 barrel.
   - Thread the drive head into the opposite end of the MC5 barrel.
   - Insert the inner drive rod drive cap.
   - Place the thread-less drive cap onto the drive head.

4. Drive the MC5 sampler down adding as many additional outer drive rods as necessary to reach 48 – 60 inches (depending on MC5 barrel length) above the target depth.

5. Move the Geoprobe back from the coring location to a sufficient distance so the inner rods may be removed.

6. Remove the thread-less drive cap and lower the probe hammer down to ground surface.

7. Attach the rod pull bar to the probe hammer and secure it to the MC5 barrel or drive rod.

8. Remove the inner rod drive cap and thread an additional section of inner drive rod onto the inner drive rods in the coring hole.

9. Extract all inner rods by manually pulling or using the Geoprobe® winch to assist.

10. Reposition the Geoprobe® over the MC5/Drive Rod and replace the drive cap.

11. Drive 48 – 60 inches (depending on MC5 barrel length).

12. Retract all rods and unthread the MC5 barrel and remove the core liner containing the sample.

13. Repeat process until desired depth and sampling intervals are completed.

Important: Documentation of sample location should include both surface and subsurface identifiers. Example: Sample Location S-6, 12.0' - 13.0' and top/bottom of core.

UNCONTROLLED COPY

14. If the sample core is not easily removed then insert the MC5 barrel into the extruder

15. Thread the MC5 barrel onto the extruder and operate the controls to extrude the sample core liner.

7.10 Groundwater Sampling – SP16 System

1. Follow Sections 7.1 thorough 7.6 with the following exception: insert a SP16 well screen (PVC or Stainless Steel) into the sampling sheath and install an expendable point into the bottom portion of the sheath.

2. Thread a drive head onto the sampling sheath and position under the probe hammer.

3. Place a thread-less drive cap onto the drive head and advance the tooling, adding as many drive rods as necessary to achieve the desired depth.

4. Position the Geoprobe® and insert the stop pin set up rods down through the drive rods to the bottom most portion into the sampling sheath itself.

5. While keeping slight pressure on the stop pin inner rods, begin extract the rods 30 inches verifying that the screen is in fact deploying.

6. With the screen deployed Groundwater samples may be collected by inserting Teflon tubing down to the screen section and pumping to the surface. Refer to *SERAS SOP #2043, Water Level Measurement* for determining the water level.

7. With the water sampling completed, extract all rods as listed in section 7.7.

Important: Documentation of sample location should include both surface and subsurface identifiers.

7.11 Installation of Geoprobe® Monitor Wells

1. Position the Geoprobe foot over the well point.

2. Fully raise the mast assembly and hammering mechanism, making room for the tooling beneath the hammer.

3. Assemble the expendable point holder, expendable point and a thread-less drive cap.

4. Position the assembly under the hammer, and lower the hammer down onto the drive cap. Lower the hammer until the foot comes off the ground approximately six inches.

5. Hammer the rod assembly into the ground until the foot touches the ground. Repeat this process until the rod is driven into the ground.

UNCONTROLLED COPY

6. Raise the hammer, remove the driver cap and add a drive rod to the assembly. Install the cap and drive the rod. Repeat this process until you reach the desired well depth.

7. Assemble a bottom plug, screen (pre-pack or slotted PVC) and PVC riser. The entire assembly must be approximately two feet longer than the well is deep so enough PVC riser remains above the surface for sampling.

8. Remove the drive cap and slide the well assembly down the drive rods with medium force.

9. To remove the rods, position the hammer rod pull system support bracket up against the rod. Install the rod puller handle. Raise the hammer slowly making sure the well remains at depth, as the rod is lifted out.

10. Repeat this process until all the drive rods are removed.

11. Use desired sand to pack the annular space and bentonite to cap the sand pack and seal the well.

7.12 Hollow Stem Auger Attachment

1. Position the Geoprobe with the outriggers down and swing the auger head out until in the locked position and attach the auger drive head securing with the supplied pin.

2. Use the main control panel to raise the auger up/down and for auger rotation.

3. Insert a wooden or plastic plug into the bottom end of the auger and position the auger underneath the rotation assembly.

4. Attach the auger to the drive head and begin advancing. Once the auger flight has been fully installed disconnect the auger drive head and fully raise the probe and load another auger.

5. While rotating and advancing the auger, cuttings will be dispensed and need to be cleared away with a shovel.

6. Once the auger flight has been fully installed disconnect the auger drive head and fully raise the probe and load another auger.

7. Repeat these steps until the desired depth has been reached.

Important: Outriggers must be deployed prior to auger operation.

8.0 CALCULATIONS

This section is not applicable to this SOP.

UNCONTROLLED COPY

UNCONTROLLED COPY

9.0 QUALITY ASSURANCE/QUALITY CONTROL

Specific QA/QC activities that apply to the implementation of these procedures will be listed in the Quality Assurance Project Plan prepared for the applicable sampling event. The following general QA procedures will also apply:

1. All sample collection data, including sample collection methods, times of collection, analyses required and decontamination procedures must be documented in site logbooks.

2. All instrumentation must be operated in accordance with operating instructions as supplied by the manufacturer or instrument-specific SOPs, unless otherwise specified in the QAPP. Equipment check-out is necessary prior to sampling and must be done according to the instruction manuals supplied by the manufacturer. Equipment must be operated by trained personnel.

3. The collection of rinsate (equipment, field) blanks is recommended to evaluate the potential for cross-contamination from non-dedicated sampling equipment. The determination of how many field (rinsate, equipment) blanks to be collected is dependent on the project's data quality objectives.

10.0 DATA VALIDATION

Data verification (completeness checks) must be conducted to ensure that all data inputs are present for ensuring the availability of sufficient information. This may include but is not limited to: location information, depth measurements and core intervals. These data are essential to providing an accurate and complete final deliverable. The SERAS Task Leader (TL) is responsible for completing the UFP-QAPP verification checklist for each project.

11.0 HEALTH AND SAFETY

When working with potentially hazardous materials, follow U.S. EPA, Occupational Safety and Health Administration (OSHA), and the SERAS site-specific HASPs. The following is a list of health and safety precautions which specifically apply to Geoprobe operation.

1. If the vehicle is parked on a loose or soft surface, do not fully raise the rear of vehicle with the probe foot, as the vehicle may fall or move.

2. The Operator is required to wear ANSI Z41 or ASTM F2413-11 approved steel shank and steel or composite boots (6-inches or higher) and keep feet clear of the probe foot.

3. The Operator is required to wear an American National Standards Institute (ANSI) Z89.1 approved Type I hard hat with Class G or E electrical protection.

4. Only one person operates the Geoprobe® with a helper assembling or disassembling probe rods and accessories.

5. Never place hands on top of a rod while it is under the machine.

6. The Operator must stand on the control side of the probe machine, clear of the probe foot and mast, while operating the controls.

7. ANSI Z87.1 approved safety glasses with side shields are required at all times.

8. Never continue to exert downward pressure on the probe rods when the probe foot has risen six inches off the ground.

9. Never exert enough downward pressure on a probe rod so as to lift the treads of the unit off the ground.

10. Always remove all tooling from the machine before folding the machine to the horizontal position.

11. Based on SERAS sound level measurements at the Geoprobe operator and helper positions of 104 decibels on the A scale (dBA) to 112 dBA, Geoprobe operators and helpers are required to wear hearing protection (i.e., ear plugs, ear muffs). Since the USEPA full Noise Reduction Ratio (NRR) on HPDs is not realized, Geoprobe operators and helpers often require ear muffs and ear plugs together to reduce noise exposure to less than 85 dBA as required by Section 3 of the SERAS SOP 3007, *Hearing Conservation Program.*

12. Locations of above and/or below ground utilities and services must be known before starting to drill or probe. The local/state utility companies are to be notified to mark out the areas in and around the proposed drilling locations. In addition, it may be necessary for private utility mark out to be completed before any intrusive work begins.

13. Shut down the hydraulic system and stop the vehicle engine before attempting to clean or service the equipment.

14. A dry chemical fire extinguisher (Type ABC) must be kept with the vehicle at all times.

12.0 REFERENCES

Geoprobe® Systems. 2005. *Geoprobe® Model 6620DT Direct Push Machine Owner's Manual.*

Geoprobe® Systems. 2009. *Tools Catalog.*

SERAS SOP 3007, *Hearing Conservation Program,* May 21, 2014.

13.0 APPENDIX

A - Figures

UNCONTROLLED COPY

APPENDIX A
Figures
SOP #2050
June 2015

UNCONTROLLED COPY

OPERATION OF THE MODEL 6620 DT GEOPROBE

FIGURE 1. Geoprobe 6620DT

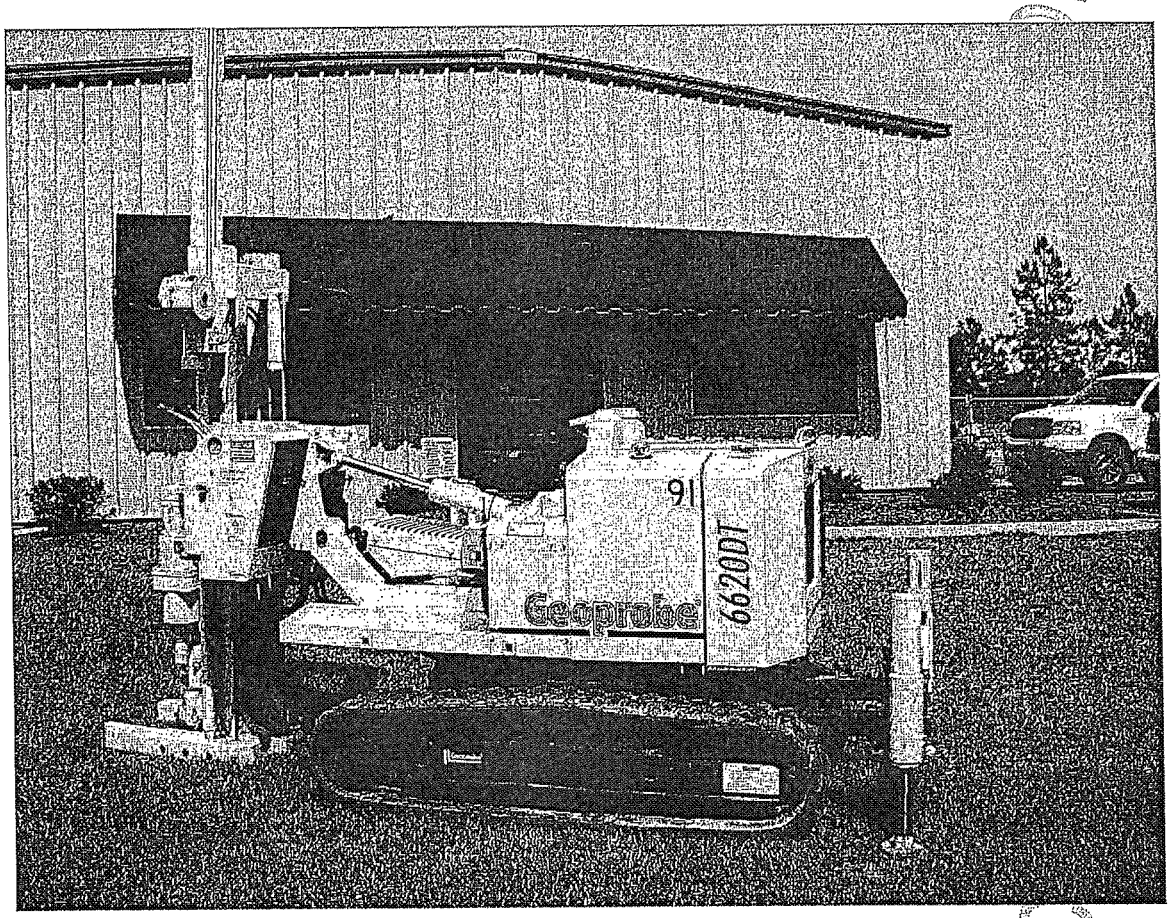

UNCOPY

UNCONTROLLED COPY

FIGURE 2. MC 5 Sampling System

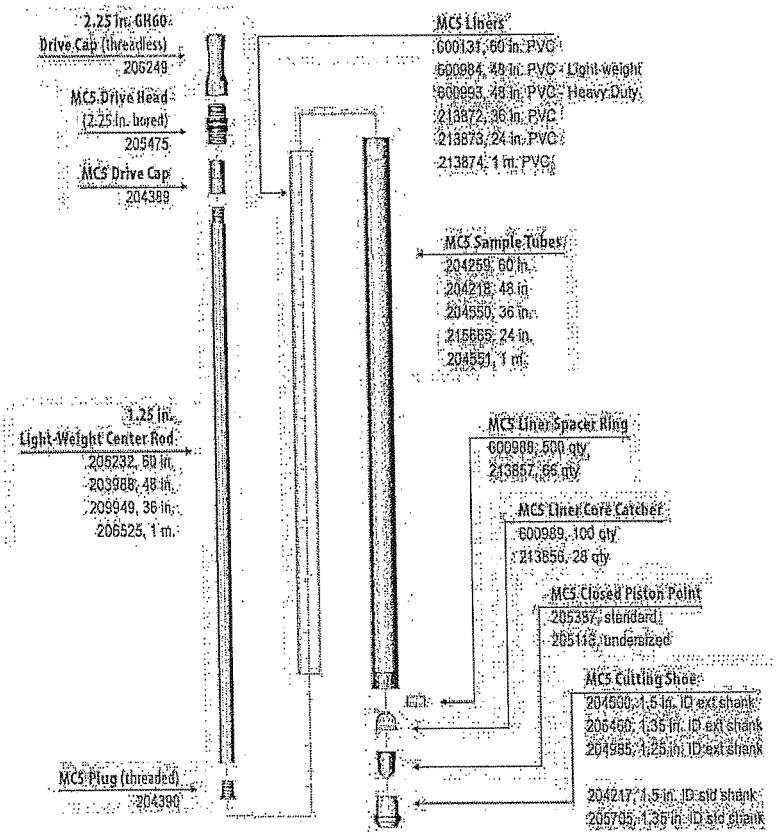

FIGURE 3. Soil Gas Sampling System

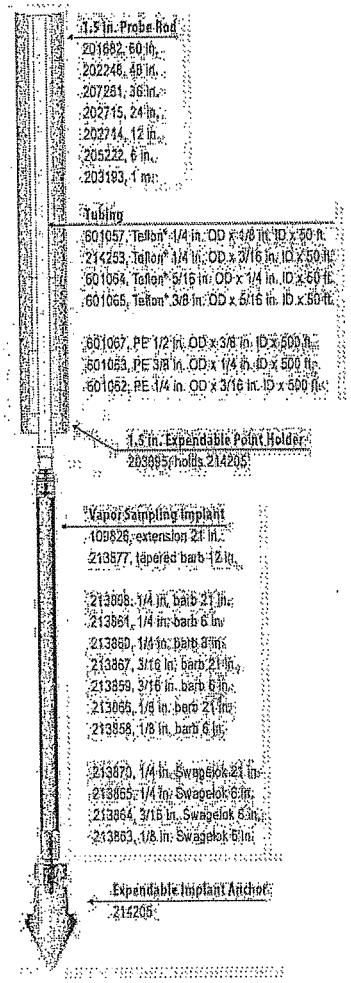

UNCONTROLLED COPY

UNCONTROLLED COPY

FIGURE 4. Concrete/Pavement Breaker System

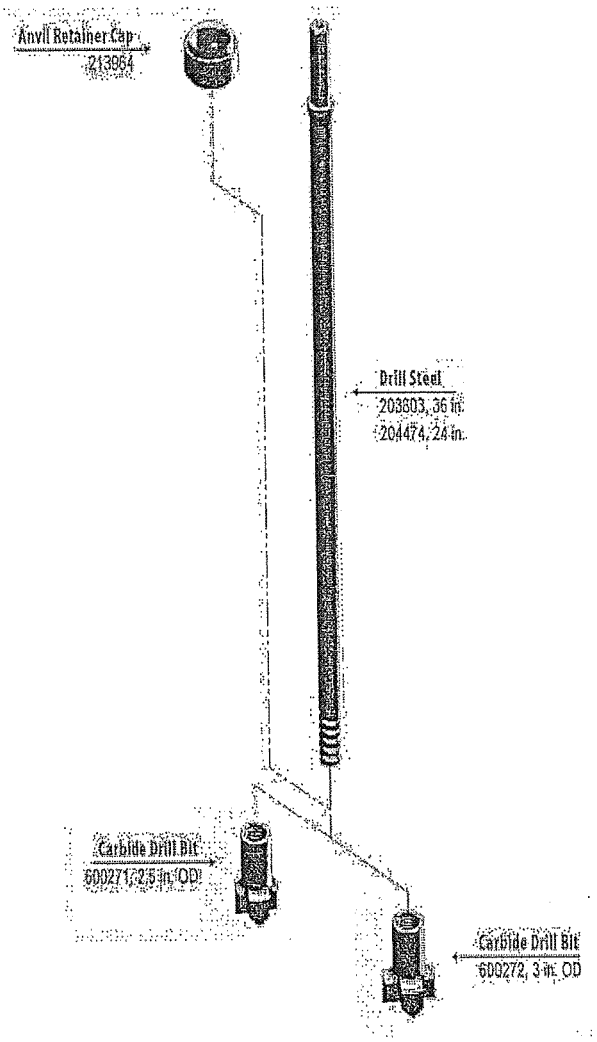

COPY

FIGURE 5. SP 16 Groundwater Sampling System

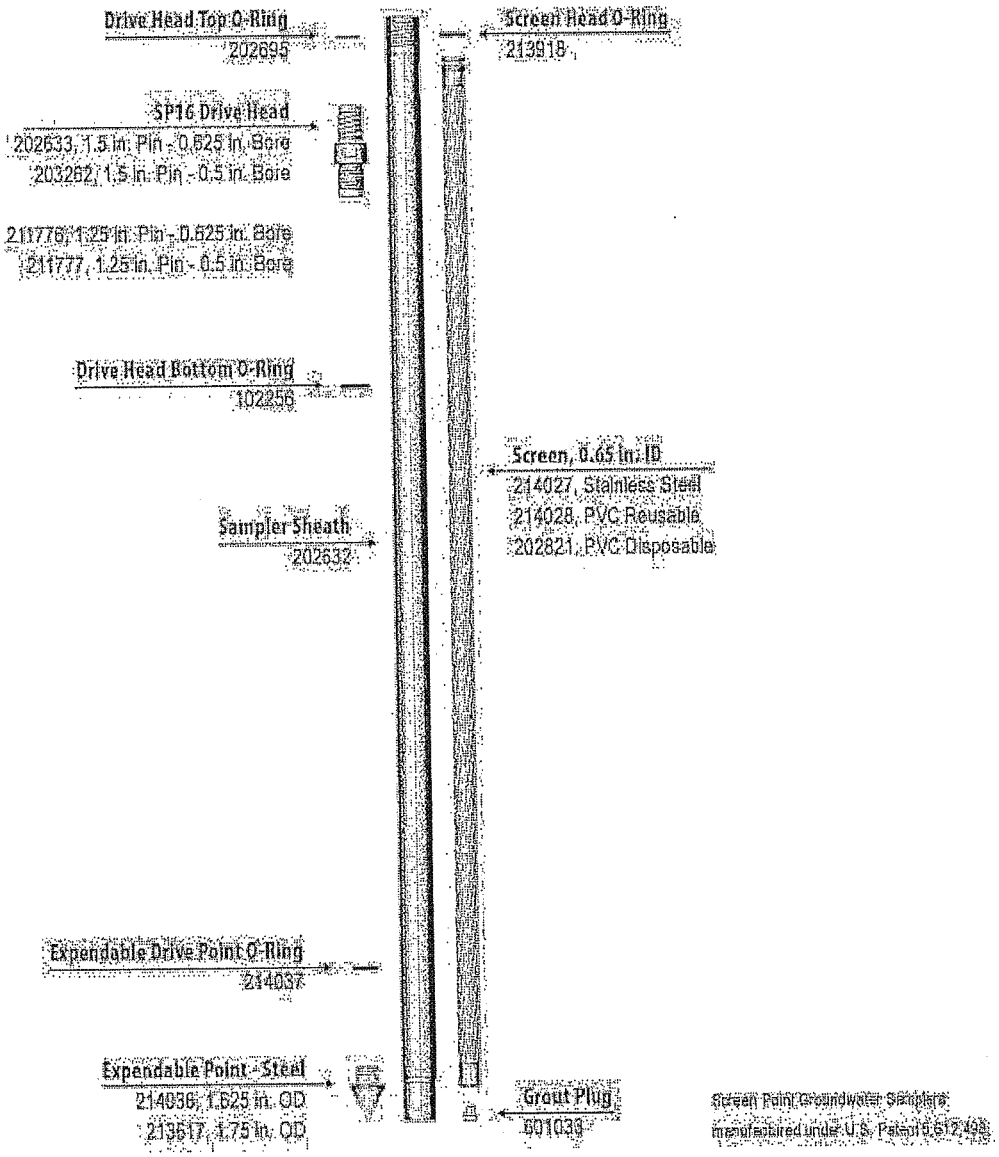

UNCONTROLLED COPY

FIGURE 6. Monitoring Well Installation Exploded View

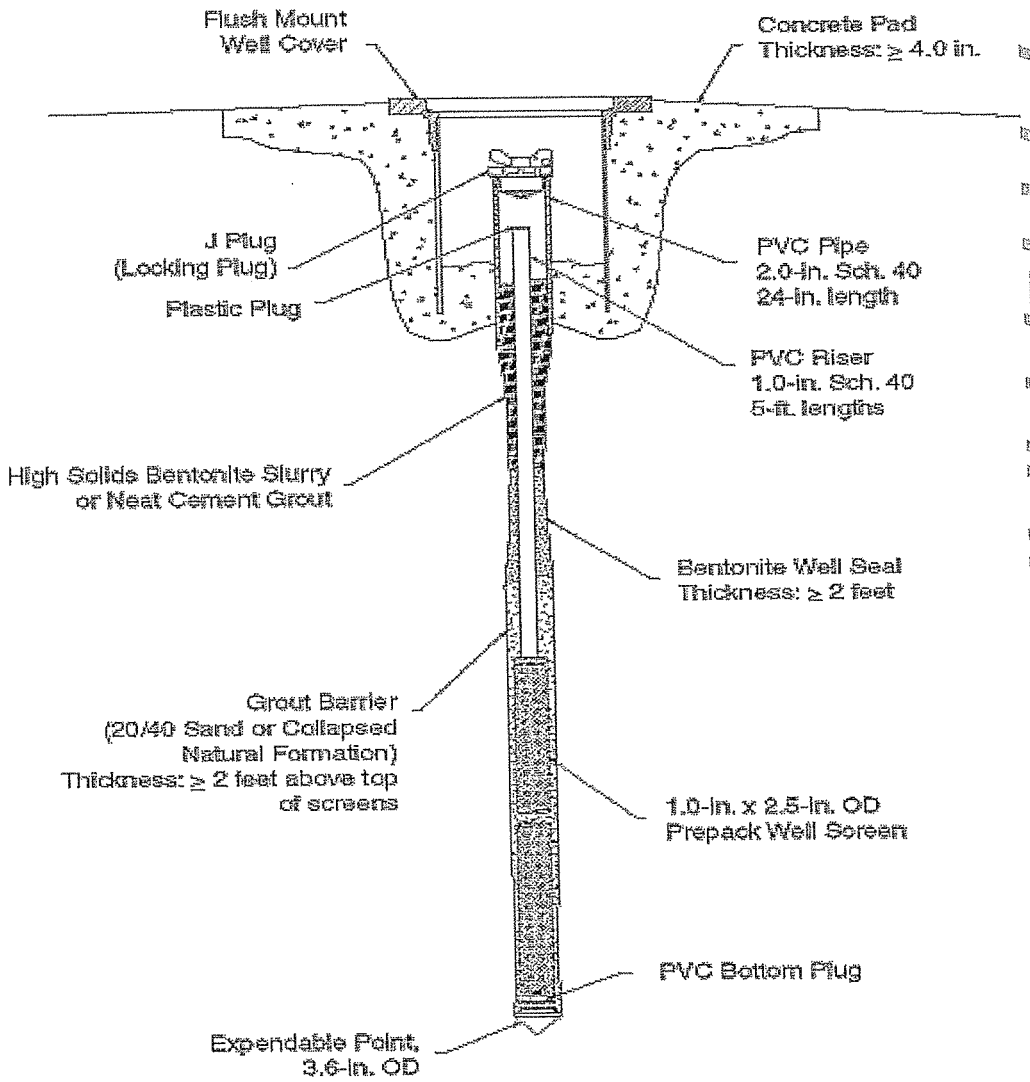

UNCONTROLLED COPY

FIGURE 7. Hollow Stem Auger System

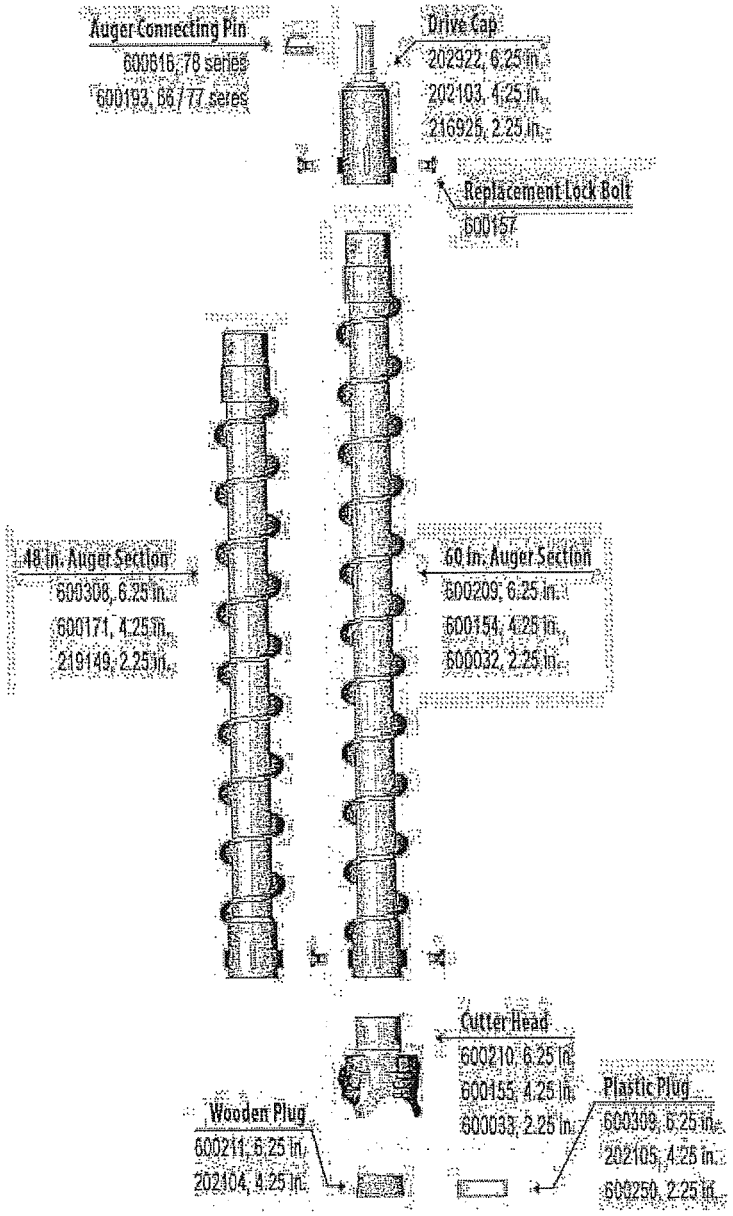

ATTACHMENT C

Analytical Services Laboratory SOPs

Attachment C to
Access Order
(CERCLA-02-2019-2009)

KEANE & BEANE P.C.
ATTORNEYS AT LAW

■ Main Office
445 Hamilton Avenue
White Plains, NY 10601
Phone 914.946.4777
Fax 914.946.6868

■ Mid-Hudson Office
200 Westage Business Center
Fishkill, NY 12524
Phone 845.896.0120

August 29, 2018

VIA EMAIL ludmer.margo@epa.gov

Margo B. Ludmer
Assistant Regional Counsel
New York/Caribbean Superfund Branch
Office of Regional Counsel
U.S. Environmental Protection Agency, Region 2

Re: Canadian Radium and Uranium Site

Dear Margo:

As Joel and I have explained to you over the past several months, while our clients are appreciative of the Environmental Protection Agency's ("EPA") request to conduct an investigation on our client's property as part of a long standing investigation, it remains concerned this issue has lingered for decades. Our clients are also concerned that EPA and its contractor's request will interfere with the current tenant's operation and be a great disturbance and potentially cause the tenant to cancel the lease. Accordingly, we have had discussions with our clients in an effort to balance the two concerns and provide EPA and its contractor with access that takes into full consideration our client's significant business concerns.

Rather than at this time go back and forth negotiating the specific language of an access agreement, we have set forth below relevant points that need to be included in any agreement. Once we have EPA's concurrence as to these terms, we can then prepare the relevant underlying document to allow EPA and its contractors access to our client's property. The key points for the proposed access agreement are as follows:

1. Property owner will grant limited access to the property by an EPA contractor subject to the following:
   a. Specific dates and times of access must be agreed upon with the intent of doing work to avoid interference with Tenant's work and performing work when Tenant is not operating.
   b. Work to be undertaken will be limited to a total of four (4) days of entry onto the site.
   c. All work undertaken by EPA contractor shall occur, to the extent possible, on days and times the Tenant is not open for business.

KEANE & BEANE P.C.
ATTORNEYS AT LAW

d. EPA and/or its contractor will provide a detailed schedule of the type of work proposed and the days and hours proposed for each segment of the work for Property Owner's review and approval prior to commencement of the work.

e. Work will be phased so that the air sampling and gamma survey are completed first and the results provided to the Property Owner. Upon review of the results, EPA will advise Property Owner in writing if there is a need to perform a subsurface investigation, which will then be coordinated with the Property Owner along the terms outlined above.

f. The contractor will provide both property damage and liability insurance in amounts satisfactory to property owner, naming both property owner and the Tenant as additional insureds.

g. Contactor or EPA will also provide property owner and the Tenant with business interruption insurance.

2. Contractor or EPA will hold harmless and indemnify property owner and Tenant for any loss of income or termination of leasehold interest by Tenant as a result of work performed on property by EPA contractor.

3. No entry may be made upon property without 24 hour advance written notice to both property owner and Tenant.

4. No equipment or testing materials may be stored upon the subject property overnight other than any canisters or similar small pieces of equipment to be placed inside the building.

5. Upon completion of the Work, the Property will be restored to Property Owner's reasonable satisfaction.

Joel and I recognize this issue has lingered for a while as we have continued our discussions and we are available to schedule a conference call to discuss the points raised herein next week at a mutually agreeable time. Both Joel and I are generally available. In the meantime, please contact us should you have any questions upon review of our letter. Thank you for your attention.

Very truly yours,

Nicholas M. Ward-Willis

NMW/sj

7787/01/644163v1 8/29/18

Attachment D to
Access Order
(CERCLA-02-2019-2009)

KEANE & BEANE P.C.
ATTORNEYS AT LAW

Main Office
445 Hamilton Avenue
White Plains, NY 10601
Phone 914.946.4777
Fax 914.946.6868

Mid-Hudson Office
200 Westage Business Center
Fishkill, NY 12524
Phone 845.896.0120

NICHOLAS M. WARD-WILLIS
Principal Member
nward-willis@kblaw.com
Also Admitted in CT

November 9, 2018

VIA EMAIL ludmer.margo@epa.gov

Margo B. Ludmer, Esq.
Assistant Regional Counsel
New York/Caribbean Superfund Branch
Office of Regional Counsel
U.S. Environmental Protection Agency, Region 2

Re: Canadian Radium and Uranium Site

Dear Margo:

Thank you for meeting with our firm and our clients last week to discuss EPA's proposed investigation of our client's property. As discussed, my clients continue to agree to provide access to the EPA so it can conduct its investigation, but wish to have confirmation as to the terms upon which access will be granted, which such terms are requested so as to minimize the disturbance and interference with the existing tenant's operation on the property. As you are aware, the tenant is a car dealership that sells and services cars at the property.

To summarize, our client's grant of access includes the following:

1) That our client and the tenant be named as additional insured on the contractor's and any subcontractor's general liability and worker's compensation insurance and proof of same be provided in advance of work commencing.

2) The air canisters for the radon testing be installed and removed during the non-operating hours of the tenant. We previously provided you with the tenant's operating hours and it does not appear this request is onerous. For example, a 72 hour test could be implemented in such a manner that the canisters are installed on a Wednesday evening after 8:00 p.m. and collected on a Sunday morning before 11:00 a.m.

KEANE & BEANE P.C.
ATTORNEYS AT LAW

3) As it appears the gamma ray detector using the "buggy" could be performed in 2 to 3 hours, that work can be completed during overnight hours or even commence on a Sunday at 7:00 a.m. and be completed prior to the tenant's operations commencing at 11:00 a.m.

4) Once the results of the radon and gamma survey testing are received and provided to our client, we can then discuss a schedule for installing the soil borings, should such additional work be necessary. We request the work be performed during overnight hours. Our client is agreeable to paying for and providing portable lights.

During our meeting, a concern was expressed that working at night is not as safe for EPA's contractor. We disagree. No one disputes that night work occurs at construction sites and highways on a regular basis. We believe working at night is safer for EPA's contractor and the tenant's workers and customers. The property is an active automobile dealership where cars are serviced, sold, new vehicles delivered to customers and owners recharge their electric car. At any given time during the day, there are approximately 30 to 40 employees at the site, with an equal number of customers present. In addition to the pedestrian traffic of the employees and customers, cars are entering and exiting the site throughout the day. Employees move cars within the site to bring them into the service bays or to make room for customers to collect cars or receive new inventory.

The suggestion that working during the night is not safe, when customers and employees are not walking on the site and cars are not being driven onto and off the property, compared to working on an active site during the day is not credible. It appears the only reason EPA will not authorize the work to be performed off hours is due to money; not safety.

KEANE & BEANE P.C.
ATTORNEYS AT LAW

Margo B. Ludmer
November 9, 2018
Page 3

Our client believes these accommodations are reasonable and should be made by EPA and do not interfere with EPA having access to our client's property. Our clients submit they have been extremely reasonable in trying to balance EPA's request for access with the needs of theirs and their tenant. We trust EPA will accommodate our request and accept the access that has been granted and I look forward to hearing from you. Thank you for your attention.

Very truly yours,

Nicholas M. Ward-Willis

NMW/sj

7787/01/650668v1 11/9/18

EXHIBIT C

Kisco Ave
Tesla
Google

EXHIBIT D

Sachs, Joel H.

From: Ludmer, Margo <ludmer.margo@epa.gov>
Sent: Friday, June 15, 2018 10:59 AM
To: Ward-Willis, Nicholas M.
Cc: Sachs, Joel H.
Subject: RE: Canadian Radium and Uranium Site
Attachments: 180611_CRU_Draft Site Specific QAPP.PDF

Nick,

Attached please find EPA's *draft* QAPP for assessment work at 125 Kisco Avenue.

While each component of EPA's planned work can generally be performed within a matter of several hours, EPA will need access for multiple days to complete all tasks. Day 1 tasks would likely include a walk-through of the property/building, placement of radon canisters in each room of the building, and field screening. Day 2 would generally entail performance of soil sampling at the proposed locations (see attached), with possible location adjustments based on screening results. While soil sampling is not expected to take more than one day to complete, it is possible that more time would be needed and EPA would want to reserve another half-day for such work. On Day 4, EPA would collect the radon canisters (at least 72 hours after placement), which would take less than one hour to perform.

Thank you for providing the hours of operation of the Tesla dealership. It may be possible for EPA to arrive at the property a few hours before the dealership opens to complete a portion of the work (e.g., placement/collection of the radon canisters). However, the remaining work will need to be completed during the dealership's normal business hours. EPA cannot perform the work on July 4, given that the OSC and possibly others will be traveling for the holiday. The earliest possible start date is July 9, subject to the availability of the contractors.

As discussed, access is needed to assess the potential presence of radiation at your client's property and the possibility of associated health risks. It is our continued hope that this matter can be resolved swiftly and in a cooperative manner so that the assessment work may be performed. I am happy to address any questions that you or your client might have and look forward to hearing from you.

Thank you,

Margo

Margo B. Ludmer
Assistant Regional Counsel
New York/Caribbean Superfund Branch
Office of Regional Counsel
U.S. Environmental Protection Agency, Region 2
(212) 637-3187

From: Ludmer, Margo
Sent: Wednesday, June 13, 2018 1:24 PM
To: 'Ward-Willis, Nicholas M.' <NWard-Willis@kblaw.com>
Cc: Sachs, Joel H. <JSachs@kblaw.com>
Subject: RE: Canadian Radium and Uranium Site

Hello Nick,

I just left you a voice message. Please give me a call when you are able.

Thank you,

Margo B. Ludmer
Assistant Regional Counsel
New York/Caribbean Superfund Branch
Office of Regional Counsel
U.S. Environmental Protection Agency, Region 2
(212) 637-3187

From: Ward-Willis, Nicholas M. [mailto:NWard-Willis@kblaw.com]
Sent: Tuesday, June 12, 2018 5:13 PM
To: Ludmer, Margo <ludmer.margo@epa.gov>
Cc: Sachs, Joel H. <JSachs@kblaw.com>
Subject: RE: Canadian Radium and Uranium Site

Margo,

I have spoken with my client and in order for them to fully consider agreeing to access they have requested to have me inform you that the Tenant's car showroom and service area is open Monday through Saturday from 10:00 a.m. to 7:00 p.m. and on Sundays from 11:00 a.m. to 6:00 p.m. The site is very busy and as you may have seen from aerial photographs, the parking lot is occupied with a number of vehicles that are stored, are waiting to be serviced or are customers' vehicles visiting the site.

Given that the existing use of the property occupies the area that is to be examined, it would make sense to schedule the EPA contractor's site work for one day when the site is not active. As it happens, the facility is closed on July 4th and my client could make arrangements with the tenant to move its cars to a nearby property owned by my client. While I recognize it is the holiday, performing the work on that day will prevent disruption with the tenants use of the property and allow for a full site characterization.

Please review with EPA's contractor promptly so that if you are able to move in this manner, we can communicate with the tenant and they can make the necessary arrangements. Otherwise, as you can see from the schedule above and the active use of the site, it will be difficult to provide access to the site. Please advise. Thank you.

Nick

Nicholas M. Ward-Willis
Principal Member

KEANE & BEANE P.C.
ATTORNEYS AT LAW
Multi-Faceted Law Firm. Singular Client Focus.

445 Hamilton Avenue, Suite 1500
White Plains, NY 10601
(914) 946-4777 Ext: 323
(914) 946-6868 (Fax)
nward-willis@kblaw.com
www.kblaw.com
Follow us on Twitter

PERSONAL & CONFIDENTIAL

The information transmitted herein may contain privileged and/or confidential material. Any disclosure, copying, distribution or other use of, or taking of any action in reliance upon, information contained herein or attached hereto by persons or entities other than the intended recipient(s) is prohibited. Any misdirection or other error in the transmission of this information is not and shall not be considered a waiver of any applicable privileges. If you have received this transmission in error, please immediately notify the sender and destroy the original transmission and its attachments without saving, distributing or copying in any manner.

Please consider the environment before printing this email message.

From: Ludmer, Margo [mailto:ludmer.margo@epa.gov]
Sent: Tuesday, June 12, 2018 11:44 AM
To: Ward-Willis, Nicholas M.
Cc: Sachs, Joel H.
Subject: RE: Canadian Radium and Uranium Site

Nick,

You are correct as to your assessment of the timing of the work. The geoprobe sampling and all backfilling or paving, if necessary, of the small boring holes can be completed within one day. The OSC is working with the contractor to obtain the draft Work Plan and a map of proposed sampling points. We should have a copy within the next few days and will send that over to you as soon as possible. I am traveling for work this week, but will be periodically checking my email and voicemail.

Thank you,

Margo

Margo B. Ludmer
Assistant Regional Counsel
New York/Caribbean Superfund Branch
Office of Regional Counsel
U.S. Environmental Protection Agency, Region 2
(212) 637-3187

From: Ward-Willis, Nicholas M. [mailto:NWard-Willis@kblaw.com]
Sent: Monday, June 11, 2018 5:36 PM
To: Ludmer, Margo <ludmer.margo@epa.gov>; Sachs, Joel H. <JSachs@kblaw.com>
Subject: RE: Canadian Radium and Uranium Site

Good afternoon Margo, kindly advise as to my inquiry below. Thank you.

Nick

Nicholas M. Ward-Willis
Principal Member

445 Hamilton Avenue, Suite 1500
White Plains, NY 10601
(914) 946-4777 Ext: 323
(914) 946-6868 (Fax)
nward-willis@kblaw.com
www.kblaw.com

Follow us on Twitter

PERSONAL & CONFIDENTIAL
The information transmitted herein may contain privileged and/or confidential material. Any disclosure, copying, distribution or other use of, or taking of any action in reliance upon, information contained herein or attached hereto by persons or entities other than the intended recipient(s) is prohibited. Any misdirection or other error in the transmission of this information is not and shall not be considered a waiver of any applicable privileges. If you have received this transmission in error, please immediately notify the sender and destroy the original transmission and its attachments without saving, distributing or copying in any manner.

Please consider the environment before printing this email message.

From: Ward-Willis, Nicholas M.
Sent: Thursday, June 07, 2018 1:38 PM
To: 'Ludmer, Margo'; Sachs, Joel H.
Subject: RE: Canadian Radium and Uranium Site

Margo, thank you for the update. Our client will be disappointed to learn of EPA's position as regards potential damages, but will appreciate the ability to work around the business hours disruption concern.

When do you anticipate you will be able to provide us with a copy of the Work Plan (a draft would be acceptable for discussion purposes). The most important part of the Work Plan is the site map detailing proposed sampling location and description of the work to be performed. It would also be helpful to know how long each discrete task will take. I presume the gamma survey should only take a few hours and be completed in one day. I assume the canisters is just a matter of placing them and then retrieving them a set number of hours/days later. I presume the geoprobe will be preceded by underground utility mark outs and the actual drilling of the geoprobe sample points and backfilling is the main question as to length of time to complete.

Please advise. Thank you.

Nick

From: Ludmer, Margo [mailto:ludmer.margo@epa.gov]
Sent: Thursday, June 7, 2018 11:20 AM
To: Sachs, Joel H.; Ward-Willis, Nicholas M.
Subject: RE: Canadian Radium and Uranium Site

Joel and Nick,

Thank you for taking the time to speak with me last week regarding EPA assessment work at 125 Kisco Avenue. To follow up on our conversation, EPA does not make funds available to compensate property owners in your client's position, nor would EPA indemnify your client. That being said, we are certainly understanding of the concerns that you have raised and would endeavor to perform the assessment work in as unobtrusive a manner as possible. EPA may be able to perform some or all of the work during non-business hours, but that is dependent upon the dealership's hours of operation and EPA availability/payment of overtime compensation.

As discussed, the QAPP is in draft form. However, I am working to get you a copy to the extent that it might be useful in informing your client. EPA does not currently have plans to perform sampling on additional properties. If there are any other questions that arise, certainly do not hesitate to call or email me. I look forward to our continued collaboration on this matter.

Sincerely,

Margo B. Ludmer

EXHIBIT E

KEANE & BEANE P.C.
ATTORNEYS AT LAW

■ Main Office
445 Hamilton Avenue
White Plains, NY 10601
Phone 914.946.4777
Fax 914.946.6868

■ Mid-Hudson Office
200 Westage Business Center
Fishkill, NY 12524
Phone 845.896.0120

August 29, 2018

VIA EMAIL ludmer.margo@epa.gov

Margo B. Ludmer
Assistant Regional Counsel
New York/Caribbean Superfund Branch
Office of Regional Counsel
U.S. Environmental Protection Agency, Region 2

Re: Canadian Radium and Uranium Site

Dear Margo:

As Joel and I have explained to you over the past several months, while our clients are appreciative of the Environmental Protection Agency's ("EPA") request to conduct an investigation on our client's property as part of a long standing investigation, it remains concerned this issue has lingered for decades. Our clients are also concerned that EPA and its contractor's request will interfere with the current tenant's operation and be a great disturbance and potentially cause the tenant to cancel the lease. Accordingly, we have had discussions with our clients in an effort to balance the two concerns and provide EPA and its contractor with access that takes into full consideration our client's significant business concerns.

Rather than at this time go back and forth negotiating the specific language of an access agreement, we have set forth below relevant points that need to be included in any agreement. Once we have EPA's concurrence as to these terms, we can then prepare the relevant underlying document to allow EPA and its contractors access to our client's property. The key points for the proposed access agreement are as follows:

1. Property owner will grant limited access to the property by an EPA contractor subject to the following:
   a. Specific dates and times of access must be agreed upon with the intent of doing work to avoid interference with Tenant's work and performing work when Tenant is not operating.
   b. Work to be undertaken will be limited to a total of four (4) days of entry onto the site.
   c. All work undertaken by EPA contractor shall occur, to the extent possible, on days and times the Tenant is not open for business.

KEANE & BEANE P.C.
ATTORNEYS AT LAW

d. EPA and/or its contractor will provide a detailed schedule of the type of work proposed and the days and hours proposed for each segment of the work for Property Owner's review and approval prior to commencement of the work.

e. Work will be phased so that the air sampling and gamma survey are completed first and the results provided to the Property Owner. Upon review of the results, EPA will advise Property Owner in writing if there is a need to perform a subsurface investigation, which will then be coordinated with the Property Owner along the terms outlined above.

f. The contractor will provide both property damage and liability insurance in amounts satisfactory to property owner, naming both property owner and the Tenant as additional insureds.

g. Contactor or EPA will also provide property owner and the Tenant with business interruption insurance.

2. Contractor or EPA will hold harmless and indemnify property owner and Tenant for any loss of income or termination of leasehold interest by Tenant as a result of work performed on property by EPA contractor.

3. No entry may be made upon property without 24 hour advance written notice to both property owner and Tenant.

4. No equipment or testing materials may be stored upon the subject property overnight other than any canisters or similar small pieces of equipment to be placed inside the building.

5. Upon completion of the Work, the Property will be restored to Property Owner's reasonable satisfaction.

Joel and I recognize this issue has lingered for a while as we have continued our discussions and we are available to schedule a conference call to discuss the points raised herein next week at a mutually agreeable time. Both Joel and I are generally available. In the meantime, please contact us should you have any questions upon review of our letter. Thank you for your attention.

Very truly yours,

Nicholas M. Ward-Willis

NMW/sj

7787/01/644163v1 8/29/18

EXHIBIT F

Ward-Willis, Nicholas M.

From: Ludmer, Margo <ludmer.margo@epa.gov>
Sent: Thursday, August 30, 2018 10:22 AM
To: Ward-Willis, Nicholas M.
Cc: Sachs, Joel H.
Subject: RE: Canadian Radium and Uranium Site

Nick,

EPA is in receipt of your letter dated August 29, 2018, regarding the Canadian Radium and Uranium Site. Over the past several months, EPA has had numerous discussions with you and your colleague, Joel Sachs, regarding the scope of EPA's planned sampling at your client's Kisco Avenue property. EPA provided you with a draft QAPP and explained in detail the work to be performed. We also reviewed many of the points raised in your August 29 letter to us.

As discussed, we can meet several of the conditions itemized in your letter (e.g., EPA can provide the specific dates and times of access, provide a description of the work to be undertaken, and provide advance notice of entry). However, as has been made clear, many of the conditions in your letter are unacceptable to EPA, including that EPA indemnify your client for any loss of income or termination of leasehold interest, that EPA perform the work outside of the Tesla facility's hours of operation (Monday to Saturday, 10 a.m. to 7 p.m., and Sunday, 11:00 a.m. to 6:00 p.m.), and that EPA delay soil sampling until after air sampling and gamma surveying has been performed and the results of that work have been analyzed.

In accordance with EPA guidance, conditions that restrict or impede the manner or extent of EPA response work, or that precondition access on indemnity or compensatory obligations, are to be treated as denial of consent to EPA access. Your August 29 letter indicates that all conditions listed in that letter must be included in any access document signed by your client. Please confirm that your client is firm in his denial of access subject to the preconditions unacceptable to EPA, as set forth in this correspondence. If so, please be advised that EPA will be forced to consider its enforcement options with respect to its investigation of your client's property.

Thank you,

Margo

Margo B. Ludmer
Assistant Regional Counsel
New York/Caribbean Superfund Branch
Office of Regional Counsel
U.S. Environmental Protection Agency, Region 2
(212) 637-3187

-----Original Message-----
From: Ward-Willis, Nicholas M. [mailto:NWard-Willis@kblaw.com]
Sent: Monday, August 27, 2018 5:30 PM
To: Ludmer, Margo <ludmer.margo@epa.gov>
Subject:

Margo, I have to leave for a meeting, but will finalize tonight so you have the document to review tomorrow. Thank you.

EXHIBIT G

KEANE & BEANE P.C.
ATTORNEYS AT LAW

Main Office
445 Hamilton Avenue
White Plains, NY 10601
Phone 914.946.4777
Fax 914.946.6868

Mid-Hudson Office
200 Westage Business Center
Fishkill, NY 12524
Phone 845.896.0120

NICHOLAS M. WARD-WILLIS
Principal Member
nward-willis@kblaw.com
Also Admitted in CT

November 9, 2018

VIA EMAIL ludmer.margo@epa.gov

Margo B. Ludmer, Esq.
Assistant Regional Counsel
New York/Caribbean Superfund Branch
Office of Regional Counsel
U.S. Environmental Protection Agency, Region 2

Re: Canadian Radium and Uranium Site

Dear Margo:

Thank you for meeting with our firm and our clients last week to discuss EPA's proposed investigation of our client's property. As discussed, my clients continue to agree to provide access to the EPA so it can conduct its investigation, but wish to have confirmation as to the terms upon which access will be granted, which such terms are requested so as to minimize the disturbance and interference with the existing tenant's operation on the property. As you are aware, the tenant is a car dealership that sells and services cars at the property.

To summarize, our client's grant of access includes the following:

1) That our client and the tenant be named as additional insured on the contractor's and any subcontractor's general liability and worker's compensation insurance and proof of same be provided in advance of work commencing.

2) The air canisters for the radon testing be installed and removed during the non-operating hours of the tenant. We previously provided you with the tenant's operating hours and it does not appear this request is onerous. For example, a 72 hour test could be implemented in such a manner that the canisters are installed on a Wednesday evening after 8:00 p.m. and collected on a Sunday morning before 11:00 a.m.

KEANE & BEANE P.C.
ATTORNEYS AT LAW

3) As it appears the gamma ray detector using the "buggy" could be performed in 2 to 3 hours, that work can be completed during overnight hours or even commence on a Sunday at 7:00 a.m. and be completed prior to the tenant's operations commencing at 11:00 a.m.

4) Once the results of the radon and gamma survey testing are received and provided to our client, we can then discuss a schedule for installing the soil borings, should such additional work be necessary. We request the work be performed during overnight hours. Our client is agreeable to paying for and providing portable lights.

During our meeting, a concern was expressed that working at night is not as safe for EPA's contractor. We disagree. No one disputes that night work occurs at construction sites and highways on a regular basis. We believe working at night is safer for EPA's contractor and the tenant's workers and customers. The property is an active automobile dealership where cars are serviced, sold, new vehicles delivered to customers and owners recharge their electric car. At any given time during the day, there are approximately 30 to 40 employees at the site, with an equal number of customers present. In addition to the pedestrian traffic of the employees and customers, cars are entering and exiting the site throughout the day. Employees move cars within the site to bring them into the service bays or to make room for customers to collect cars or receive new inventory.

The suggestion that working during the night is not safe, when customers and employees are not walking on the site and cars are not being driven onto and off the property, compared to working on an active site during the day is not credible. It appears the only reason EPA will not authorize the work to be performed off hours is due to money; not safety.

KEANE & BEANE P.C.
ATTORNEYS AT LAW

Margo B. Ludmer
November 9, 2018
Page 3

Our client believes these accommodations are reasonable and should be made by EPA and do not interfere with EPA having access to our client's property. Our clients submit they have been extremely reasonable in trying to balance EPA's request for access with the needs of theirs and their tenant. We trust EPA will accommodate our request and accept the access that has been granted and I look forward to hearing from you. Thank you for your attention.

Very truly yours,

Nicholas M. Ward-Willis

NMW/sj

7787/01/650668v1 11/9/18

EXHIBIT H

Ward-Willis, Nicholas M.

From: Doyle, James <Doyle.James@epa.gov>
Sent: Tuesday, December 4, 2018 12:53 PM
To: Ward-Willis, Nicholas M.
Cc: Ludmer, Margo; Gaughan, Daniel
Subject: Canadian Radium and Uranium Site

Dear Mr. Ward-Willis, I am writing to reply to your letter of November 9, 2018, and to reiterate EPA's position regarding our request for access from your client and its response regarding its property on Kisco Avenue in Mount Kisco, New York. By way of background, we have been in discussions with you over your client's willingness to provide consent to EPA to access its property since May of this year, but your client has withheld such consent based on certain pre-conditions it has insisted upon.

As has been described to you, EPA's express national policy regarding requests for access is that conditions placed on a grant of access are deemed a denial of access. I mention this because, in the first paragraph of your letter, you state that your "... clients continue to agree to provide access ... but wish to have confirmation as to the terms upon which access will be granted... ." You then go on for a page to itemize four pre-conditions to access that EPA has discussed with you on multiple occasions, discussions during which we explained why we cannot accept your conditions. In accordance with our policy, this does not constitute an agreement to provide access, as you represent in your letter, but a clear denial of access.

We see no point in continuing to rehash the merits of our positions regarding your client's pre-conditions. Your opinion on our safety concerns for our personnel and contractors notwithstanding, we find your view that EPA should not be considering the financial implications of your client's pre-conditions to access during our discussions to be odd. Certainly, we have a responsibility to consider cost in our actions, and thus cost is a relevant factor in many decisions. Months-long delays in obtaining information regarding potential public health risk is another factor.

Our stated position is that your client's pre-conditions to access are not reasonable. They will cause delay, result in additional cost, and pose additional safety concerns for our workers. We are left with no alternative but to evaluate our enforcement options regarding access to your client's property.

EXHIBIT I

Sachs, Joel H.

From: Ludmer, Margo <ludmer.margo@epa.gov>
Sent: Friday, March 29, 2019 2:07 PM
To: Ward-Willis, Nicholas M.
Cc: Sachs, Joel H.; Doyle, James
Subject: Kisco Ave Sampling Work

Nick,

Our client conferred with the Removal Support Team contractor regarding the planned sampling event at your client's property. If your client is willing to cover the additional costs associated with off-hours work, as was discussed during our call on Wednesday, EPA and the contractor are willing begin the sampling work on either Saturday or Sunday. Because EPA requires at least three full and consecutive days of access for the screening and soil sampling, as well as one day to collect the radon cannisters, the work cannot be confined to the weekend and would extend from either Saturday or Sunday into the work week. EPA continues to view nighttime work as an unacceptable condition to access.

As soon as possible, please let me know if your client agrees to access on these terms. If this arrangement is acceptable to your client, we can provide you with a ballpark estimate of the potential costs. Otherwise, please let me know your/your client's availability Monday – Thursday of next week for the conference on the access order.

Thank you,

Margo

Margo B. Ludmer
Assistant Regional Counsel
NY/Caribbean Superfund Branch
Office of Regional Counsel
U.S. Environmental Protection Agency, Region 2
(212) 637-3187

EXHIBIT J

KEANE & BEANE P.C.
ATTORNEYS AT LAW

■ Main Office
445 Hamilton Avenue
White Plains, NY 10601
Phone 914.946.4777
Fax 914.946.6868

■ Mid-Hudson Office
200 Westage Business Center
Fishkill, NY 12524
Phone 845.896.0120

■ New York City Office
505 Park Avenue
New York, NY 10022
Phone 646.794.5747

NICHOLAS M. WARD-WILLIS
Principal Member
nward-willis@kblaw.com
Also Admitted in CT

April 1, 2019

VIA EMAIL ludmer.margo@epa.gov

Margo B. Ludmer, Esq.
Assistant Regional Counsel
New York/Caribbean Superfund Branch
Office of Regional Counsel
U.S. Environmental Protection Agency, Region 2

Re: Canadian Radium and Uranium Site

Dear Margo:

Thank you for your email of Friday afternoon which we have had the opportunity to discuss with our client. Our clients are generally in agreement with the concept of paying for the additional costs associated with off hours work, but need more details both as to the cost and the proposed schedule before a final commitment can be made. Once my client has these details, they will confirm the time schedule with the tenant and then confirm the arrangements with your office.

The tenant's location closes at 6:00 p.m. on Saturday and is open from 11:00 a.m. to 6:00 p.m. on Sunday. While we do not know your client's contractors mobilization needs and work schedule, we suggest the following and invite your comments:

1. The air canisters be placed in the building any time after 6:00 p.m. Saturday evening when the service, sales and customers have left the building and ready access can be provided.

2. The performance of the radiological survey can occur Saturday evening starting at 6:30 p.m. after the employees and customers have removed their cars from the parking lot.

3. Soil sampling can commence in the parking lot on Saturday evening and our clients are prepared to pay for lights to allow the work to continue into the evening. As the four samples proposed for the parking lot interfere the most with the tenant's activities, these four should occur on

KEANE & BEANE P.C.
ATTORNEYS AT LAW

Saturday evening and if necessary, be completed Sunday morning.

4. The two samples to be taken in the street side of the building can be collected Sunday morning before 11:00 a.m. such that the parking of the drill rig and the work movements of the contractors will not interfere with the tenant's customers and employees.

5. The three samples to be collected along the southern side of the building and the one sample to be collected on the track side of the building can be collected Sunday afternoon and extend into Monday if necessary.

We recognize this is an aggressive schedule, but suggest the performance of work during the evening hours on Saturday and all day Sunday (with the four samples in the parking lot to be collected as the first task for the drilling) should reasonably allow for this goal to be met.

While we understand EPA's reluctance to allow nighttime work, it is common practice to do nighttime work and the area can be lit in a manner to allow it to be safely performed. Performance of the work during the evening is arguably safer as there will not be customers and employees parking and driving onto the lot and the lot will have fewer vehicles parked on it as the employees will not have parked their cars on the lot overnight.

Please review this proposed schedule with your client and advise. Thank you.

Very truly yours,

Nicholas M. Ward-Willis

NMW/sj
cc: Andrew Cannistra, CPA
Victor Cannistra, CPA
Joel Sachs, Esq

7787/01/668356v1 4/1/19

EXHIBIT K

UNITED STATES ENVIRONMENTAL PROTECTION AGENCY
REGION 2
290 BROADWAY
NEW YORK, NY 10007-1866

BY REGULAR MAIL AND E-MAIL

April 11, 2019

Nicholas M. Ward-Willis, Esq.
Keane & Beane, P.C.
445 Hamilton Avenue
White Plains, NY 10601
nward-willis@kblaw.com

Re: Cannistra Realty, LLC - Conference on Administrative Order for Access
Index No. CERCLA-02-2019-2009

Dear Mr. Ward-Willis:

At the request of Respondent, Cannistra Realty, LLC, to the above-referenced Administrative Order for Access ("Order") issued on March 12, 2019 in connection with the Canadian Radium and Uranium Superfund Site ("Site"), a conference was held on April 4, 2019 at the offices of the U.S. Environmental Protection Agency, Region 2, ("EPA") with representatives of EPA and Respondent to discuss the Order. See attached sign-in sheet.

The Order requires the Respondent to provide EPA with access to property located at 115 Kisco Avenue and 125 Kisco Avenue in Mount Kisco, New York ("Property") for the purpose of performing investigative activities, including radiological testing. The testing includes the placement of radon canisters within the building at the Property, a radiological survey of the Property using a "buggy" with a gamma probe attached (the approximate size of a baby stroller) to walk across the Property and the installation of at least ten soil borings utilizing a geoprobe (the approximate size of a lawn tractor), all to be conducted within a period of 4-6 days.

The Respondent requested the conference pursuant to Paragraph 27 of the Order. Consistent with Paragraph 27, the purpose of the conference was to discuss any matter pertinent to the Order, including its applicability, the factual findings, the conclusions of law or determinations on which it was based. or any other relevant and material issues or contentions that Respondent may have regarding the Order. I presided at the conference as an attorney in EPA's Office of Regional Counsel who has not been involved with the Site or in the preparation and issuance of the Order.

After the conference, I conferred with Angela Carpenter, the Acting Director of the Emergency and Remedial Response Division, on the issues raised by Respondent. Ms. Carpenter has determined that no modifications to the Order are necessary or appropriate at this time.

First, it should be noted that EPA and Respondent have been discussing the access issue for some time, going as far back as August 2018 and earlier, and that some accommodations have been made by both sides including Respondent expressing a willingness to pay EPA for the additional costs EPA incurs for work conducted during non-business hours, and EPA willing to perform some of the work during non-business hours.[1]

Respondent raised several concerns regarding the Order. Respondent claims that the Order is procedurally invalid because it was not issued in compliance with EPA guidance which calls for EPA regions to confer with EPA Headquarters prior to issuing an order for access, Concurrence by EPA Headquarters officials is not a legal prerequisite to issuance of the Order, and the lack of concurrence cannot be relied on by Respondent. In addition, Respondent claims that the Order is deficient because it does not take into account that the Property is a car dealership and, therefore, it is unreasonable for EPA to enter and perform testing of the Property during business hours. In particular, Respondent wants the soil borings installed after business hours. The proposed testing appears to be minimally intrusive and designed to cause the least disruption to the tenant's business, especially considering the anticipated limited duration of the testing.

If you have any questions concerning the conference, please contact me at (212) 637-3120 or burke.gerard@epa.gov. All other issues concerning the Site and the Order should be addressed to Assistant Regional Counsel Margo Ludmer at 212-637-3187 or ludmer.margo@epa.gov.

Sincerely,

Gerard Burke

Gerard Burke
Assistant Regional Counsel

cc: Margo Ludmer, Esq., EPA

Attachment

[1] Respondent's tenant operates a car dealership on the Property. The business hours of the dealership are 8:00 AM to 6:00 PM Monday through Saturday and 11:00 AM to 6:00 PM on Sunday.

EXHIBIT L

Ward-Willis, Nicholas M.

From: Victor Cannistra <victorc@cannistracpa.com>
Sent: Wednesday, April 17, 2019 11:20 AM
To: Gaughan.Daniel@epa.gov
Cc: Andy Cannistra
Subject: Site Testing

Hello Dan,

Andy and I would like to discuss with you the specific timing of the testing work you want to complete on our property.

We have spoken with the Tesla manager at the Mt. Kisco location and informed him of the testing work that the EPA wants to complete. He indicated to us that Friday, Saturday and Sunday are the busiest days and that Monday through Thursday would be best. He also indicated that April and May are better months to complete the work. June is very busy due to the quarter end car deliveries.

The manager said to us that he was very concerned about his customers seeing this testing activity. The placing of the radon canisters does not seem to be an issue. He was most concerned about the drilling activities and somewhat concerned about the buggy. He requested that the testing activities occur after 6pm when the facility is closed. He stated, as we have, that it stays light much later this time of the year. As the landlord, we are doing our best to not interfere with or harm out tenant's business operations.

So we would like to speak with you about specific times for the work:

1. The radon canister can be placed and collected at any time. So we don't see this as an issue.

2. Can the buggy work be completed after the facility is closed? Our understanding is that the buggy work will take 1 to 2 hours to complete. As previously offered, we will pay all extra cost associated with this off hours work.

3. Can we have the drilling in the parking lot and in front of the building be completed when the facility is closed? This would alleviate all the concerns about interfering with our tenant's operations and the safety concerns in regard to the work being completed when customers and employees are present. As previously offered, we will pay for any cost associated with this off hours work.

If you could please consider our concerns and provide us with a specific schedule as to the timing of the testing you are proposing it would be appreciated.

Andy and I can be reached at these email addresses or at phone numbers below if you would like to discuss this with us.

Thank you,
Victor and Andy

EXHIBIT M

Ward-Willis, Nicholas M.

From: Victor Cannistra <victorc@cannistracpa.com>
Sent: Thursday, April 18, 2019 2:41 PM
To: Ward-Willis, Nicholas M.
Subject: Fwd: Site Testing

---------- Forwarded message ---------
From: **Gaughan, Daniel** <Gaughan.Daniel@epa.gov>
Date: Thu, Apr 18, 2019 at 1:22 PM
Subject: RE: Site Testing
To: Victor Cannistra <victorc@cannistracpa.com>
Cc: Andy Cannistra <andyc@cannistracpa.com>, Ludmer, Margo <ludmer.margo@epa.gov>, Doyle, James <Doyle.James@epa.gov>

Victor and Andy,

EPA is willing to work Monday through Thursday as requested. EPA would plan to arrive at the site at 7 AM on a Monday to conduct a health and safety briefing and set up all equipment. We would plan to begin site work at 8 AM. We will arrange for the radon canisters to be placed and begin the gamma screening of the site. We will review the gamma screening data and then determine the locations of the soil borings.

For the remainder of the mobilization, we would plan to begin work at approximately 8 AM and will work until 5 PM until we install all of the necessary borings. As EPA has previously stated, for reasons including health and safety concerns, we will not perform the work outside of normal business hours.

I am willing to discuss with the Tesla manager all of the proposed actions and explain to him the need for the work, the length of time it will take, and our safety procedures.

EPA requires at least three weeks to arrange all subcontracts and arrange for equipment delivery. I believe that we can accommodate the facility's request to perform the work in May of 2019 as long as we are assured that access will be granted (i.e., Cannistra Realty complies with the access order, which became effective yesterday). Please be reminded that you have until tomorrow to notify EPA of your intent to comply with the order.

I will be out of the office all next week. Please direct any response to this email to Margo Ludmer and all future correspondence.