Weston Solutions, Inc.
1090 King Georges Post Road, Suite 201
Edison, New Jersey 08837-3703
732-585-4400 • Fax: 732-225-7037
www.westonsolutions.com

SUPERFUND TECHNICAL ASSESSMENT & RESPONSE TEAM V
EPA CONTRACT NO.: 68HE0319D0004

September 5, 2019

Mr. Daniel Gaughan, On-Scene Coordinator
U.S. Environmental Protection Agency, Region II
Superfund and Emergency Management Division
2890 Woodbridge Avenue
Edison, NJ 08837

EPA CONTRACT No: 68HE0319D0004
TD No: TO-0032-0030
DC No: STARTV-01-F-0018
SUBJECT: SITE-SPECIFIC UFP QUALITY ASSURANCE PROJECT PLAN CANADIAN RADIUM AND URANIUM CORP. SITE, MOUNT KISCO, WESTCHESTER COUNTY, NEW YORK

Dear Mr. Graughan,

Enclosed please find the Site-Specific Uniform Federal Policy (UFP) Quality Assurance Project Plan (QAPP) for the Removal Assessment to be performed at the Canadian Radium and Uranium Corp. Site (the Site) located in Mount Kisco, Westchester County, New York. This plan covers the ground radiological survey and radon and soil sampling activities to be conducted at the Site beginning on September 8, 2019. The EPA comments in regards to the previous version of this QAPP (Document Control Number: STARTV-01-D-0050) have been incorporated.

If you have any questions, please do not hesitate to call me at (732) 585-4413.

Sincerely,

Weston Solutions, Inc.

Bernard Nwosu
START V Site Project Manager

Enclosure:
cc: TD File: TO-0032-0030

SITE-SPECIFIC UFP QUALITY ASSURANCE PROJECT PLAN

CANADIAN RADIUM AND URANIUM CORP.

Mount Kisco, Westchester County, New York

SSID No.: A23P
EPA ID No.: NYD987001468

Prepared by:

Superfund Technical Assessment & Response Team V
Weston Solutions, Inc.
Federal East Division
Edison, New Jersey 08837

Prepared for:

U.S. Environmental Protection Agency, Region II
Superfund and Emergency Management Division
2890 Woodbridge Avenue
Edison, New Jersey 08837

DC No: STARTV-01-F-0018
TD No: TO-0032-0030
EPA CONTRACT No: 68HE0319D0004

September 2019

TABLE OF CONTENTS

TABLE 1 — Crosswalk 1
QAPP Worksheet #1& 2: Title and Approval Page 3
QAPP Worksheet #3 & 5: Project Organizational and QAPP Distribution 5
QAPP Worksheet #4, 7 & 8: Personnel Qualification and Sign-off Sheet 7
QAPP Worksheet #6: Communication Pathways 9
QAPP Worksheet #9: Project Planning Session Summary 10
QAPP Worksheet #10: Conceptual Site Model 12
QAPP Worksheet #11: Project/Data Quality Objectives 18
QAPP Worksheet #12: Measurement Performance Criteria Table 21
QAPP Worksheet #13: Secondary Data Criteria and Limitations 25
QAPP Worksheet #14 & 16: Project Tasks and Schedules 26
QAPP Worksheet #15: Project Action Limits and Laboratory-Specific Detection/Quantitation Limits 30
QAPP Worksheet #17: Sampling Design and Rationale 34
QAPP Worksheet #18: Sampling Locations and Methods/SOP Requirements Table 36
QAPP Worksheet #19 & 30: Sample Containers, Preservation, and Hold Times 37
QAPP Worksheet #20: Field Quality Control Sample Summary 38
QAPP Worksheet #21: Project Sampling SOP References Table 39
QAPP Worksheet #22: Field Equipment Calibration, Maintenance, Testing, and Inspection Table 39
QAPP Worksheet #23: Analytical SOPs 40
QAPP Worksheet #24: QAPP Worksheet #24: Analytical Instrument Calibration Table 40
QAPP Worksheet #25: Analytical Instrument and Equipment Maintenance, Testing, and Inspection Table 41
QAPP Worksheet #26 & 27: Sample Handling, Custody, and Disposal 42
QAPP Worksheet #28: QC Samples Table 44
QAPP Worksheet #29: Project Documents and Records 48
QAPP Worksheet #31, 32 & 33: Assessments and Corrective Action 50
QAPP Worksheet #34: Data Verification and Validation Inputs 52
QAPP Worksheet #35: Data Verification Procedures 53
QAPP Worksheet #36: Data Validation Procedures 55
QAPP Worksheet #37: Usability Assessment 56

ED_006395_00002031-00003

LIST OF ATTACHMENTS

Attachment A – Figure 1: Site Location Map
Figure 2: Proposed Soil Boring Location Map

Attachment B – ERT/SERAS SOP # 2001 – *General Field Sampling Guidelines*
ERT/SERAS SOP # 2006 – *Sample Equipment Decontamination*
ERT/SERAS SOP # 2012 – *Soil Sampling*
ERT/SERAS SOP # 2050 – *Geoprobe Operation*
Protocol for Conducting Radon and Radon Decay Product Measurements in Multifamily Buildings (MAMF 2012)

ED_006395_00002031-00004

LIST OF ACRONYMS

ADR	Automated Data Review
ANSETS	Analytical Services Tracking System
AOC	Acknowledgment of Completion
ASTM	American Society for Testing and Materials
CEO	Chief Executive Officer
CERCLA	Comprehensive Environmental Response, Compensation and Liability Act
CLP	Contract Laboratory Program
CFM	Contract Financial Manager
CO	Contract Officer
COI	Conflict of Interest
COO	Chief Operations Officer
CRDL	Contract Required Detection Limit
CRTL	Core Response Team Leader
CRQL	Contract Required Quantitation Limit
CQLOSS	Corporate Quality Leadership and Operations Support Services
CWA	Clean Water Act
DCN	Document Control Number
DI	Deionized Water
DPO	Deputy Project Officer
DQI	Data Quality Indicator
DQO	Data Quality Objective
EM	Equipment Manager
EDD	Electronic Data deliverable
ENVL	Environmental Unit Leader
EPA	Environmental Protection Agency
ERT	Environmental Response Team
FASTAC	Field and Analytical Services Teaming Advisory Committee
GC/ECD	Gas Chromatography/Electron Capture Detector
GC/MS	Gas Chromatography/Mass Spectrometry
HASP	Health and Safety Plan
HRS	Hazard Ranking System
HSO	Health and Safety Officer
ITM	Information Technology Manager
LSASD	Laboratory Services and Applied Science Division
LEL	Lower Explosive Limit
MSA	Mine Safety Appliances
MS/MSD	Matrix Spike/Matrix Spike Duplicate
NELAC	National Environmental Laboratory Accreditation Conference
NELAP	National Environmental Laboratory Accreditation Program
NIOSH	National Institute for Occupational Safety and Health
NIST	National Institute of Standards and Technology
OSC	On-Scene Coordinator
OSHA	Occupational Safety and Health Administration

ED_006395_00002031-00005

LIST OF ACRONYMS (Concluded)

OSWER	Office of Solid Waste and Emergency Response
PARCCS	Precision, Accuracy, Representativeness, Completeness, Comparability, Sensitivity
PAH	Polynuclear Aromatic Hydrocarbons
PCB	Polychlorinated Biphenyls
PIO	Public Information Officer
PM	Program Manager
PO	Project Officer
PRP	Potentially Responsible Party
PT	Proficiency Testing
QA	Quality Assurance
QAL	Quality Assurance Leader
QAPP	Quality Assurance Project Plan
QMP	Quality Management Plan
QA/QC	Quality Assurance/Quality Control
QC	Quality Control
RC	Readiness Coordinator
RCRA	Resource Conservation and Recovery Act
RPD	Relative Percent Difference
RSCC	Regional Sample Control Coordinator
RST	Removal Support Team
SARA	Superfund Amendments and Reauthorization Act
SEDD	Staged Electronic Data Deliverable
SOP	Standard Operating Practice
SOW	Statement of Work
SPM	Site Project Manager
START	Superfund Technical Assessment & Response Team
STR	Sampling Trip Report
TAL	Target Analyte List
TCL	Total Compound List
TD	Technical Direction
TDL	Technical Direction Letter
TO	Task Order
TQM	Total Quality Management
TSCA	Toxic Substances Control Act
UFP	Uniform Federal Policy
VOA	Volatile Organic Analysis

ED_006395_00002031-00006

TABLE 1 — Crosswalk

Optimized UFP-QAPP Worksheets		2106-G-05 QAPP Guidance Section	
A. Project Management and Objectives			
1 & 2	Title and Approval Page	2.2.1	Title, Version, and Approval/Sign-Off
3 & 5	Project Organization and QAPP Distribution	2.2.3	Distribution List
		2.2.4	Project Organization and Schedule
4, 7, & 8	Personnel Qualifications and Sign-Off Sheet	2.2.1	Title, Version, and Approval/Sign-Off
		2.2.7	Special Training Requirements and Certifications
6	Communication Pathways	2.2.4	Project Organization and Schedule
9	Project Planning Session Summary	2.2.5	Project Background, Overview, and Intended Use of Data
10	Conceptual Site Model (CSM)	2.2.5	Project Background, Overview, and Intended Use of Data
11	Project/Data Quality Objectives	2.2.6	Data/Project Quality Objectives and Measurement Performance Criteria
12	Measurement Performance Criteria	2.2.6	Data/Project Quality Objectives and Measurement Performance Criteria
13	Secondary Data Uses and Limitations	Chapter 3	QAPP ELEMENTS FOR EVALUATING EXISTING DATA
14 & 16	Project Tasks & Schedule	2.2.4	Project Organization and Schedule
15	Project Action Limits and Laboratory-Specific Detection/Quantitation Limits	2.2.6	Data/Project Quality Objectives and Measurement Performance Criteria
B. Measurement/Data Acquisition			
17	Sampling Design and Rationale	2.3.1	Sample Collection Procedure, Experimental Design, and Sampling Tasks
18	Sampling Locations and Methods	2.3.1	Sample Collection Procedure, Experimental Design, and Sampling Tasks
		2.3.2	Sampling Procedures and Requirements
19 & 30	Sample Containers, Preservation, and Hold Times	2.3.2	Sampling Procedures and Requirements
20	Field Quality Control (QC) Sample Summary	2.3.5	QC Requirements
21	Field Standard Operating Procedures (SOPs)	2.3.2	Sampling Procedures and Requirements

ED_006395_00002031-00007

TABLE 1 — Crosswalk (Concluded)

Optimized UFP-QAPP Worksheets		2106-G-05 QAPP Guidance Section	
B. Measurement/Data Acquisition			
22	Field Equipment Calibration, Maintenance, Testing, and Inspection	2.3.6	Instrument/Equipment Testing, Calibration and Maintenance Requirements, Supplies and Consumables
23	Analytical SOPs	2.3.4	Analytical Methods Requirements and Task Description
24	Analytical Instrument Calibration	2.3.6	Instrument/Equipment Testing, Calibration and Maintenance Requirements, Supplies and Consumables
25	Analytical Instrument and Equipment Maintenance, Testing, and Inspection	2.3.6	Instrument/Equipment Testing, Calibration and Maintenance Requirements, Supplies and Consumables
26 & 27	Sample Handling, Custody, and Disposal	2.3.3	Sample Handling, Custody Procedures, and Documentation
28	Analytical QC and Corrective Action	2.3.5	QC Requirements
29	Project Documents and Records	2.2.8	Document and Records Requirements
C. Assessment/Oversight			
31, 32, & 33	Assessments and Corrective Action	2.4	ASSESSMENTS AND DATA REVIEW (CHECK)
		2.5.5	Reports to Management
D. Data Review			
34	Data Verification and Validation Inputs	2.5.1	Data Verification and Validation Targets and Methods
35	Data Verification Procedures	2.5.1	Data Verification and Validation Targets and Methods
36	Data Validation Procedures	2.5.1	Data Verification and Validation Targets and Methods
37	Data Usability Assessment	2.5.2	Quantitative and Qualitative Evaluations of Usability
		2.5.3	Potential Limitations on Data Interpretation
		2.5.4	Reconciliation with Project Requirements

ED_006395_00002031-00008

QAPP Worksheet #1 & 2: Title and Approval Page

1. Project Identifying Information

a) **Site Name/Project Name:** Canadian Radium and Uranium Corp.
b) **Site Location/No.:** Mount Kisco, Westchester County, New York/ NYD987001468
c) **Contract/Work Assignment No.:** 68HE0319D0004/ TD#: 0032-0030

2. Lead Organization

Weston Solutions, Inc.
1090 King Georges Post Road, Suite 201
Edison, New Jersey 08837

Lead Organization's Site Project Manager:

Bernard Nwosu		09/05/2019
Printed Name/Title	Signature	Date

Lead Organization's Technical Review:

Bernard Nwosu		09/05/2019
Printed Name/Title	Signature	Date

Lead Organization's QA/QC Chemist:

Smita Sumbaly		09/05/2019
Printed Name/Title	Signature	Date

EPA Region II On-Scene Coordinator:

Printed Name/Title	Signature	Date

EPA Region II Quality Assurance Officer:

Printed Name/Title	Signature	Date

Document Control Number: STARTV-01-F-0018

ED_006395_00002031-00009

QAPP Worksheet #1& 2: Title and Approval Page (Concluded)

3. List Plans and reports from previous investigation relevant to this project.

07/31/2015 – Site-Specific UFP Quality Assurance Project Plan, Canadian Radium and Uranium Corp. (RST3-02-D-0010)

10/07/2015 – Site-Specific UFP Quality Assurance Project Plan, Canadian Radium and Uranium Corp. (RST3-02-D-0095)

04/01/2016 – Site-Specific UFP Quality Assurance Project Plan, Canadian Radium and Uranium Corp. (RST3-02-D-0239)

04/01/2016 – Site-Specific UFP Quality Assurance Project Plan, Canadian Radium and Uranium Corp. (RST3-03-D-0123)

Exclusions:

QAPP Worksheet #22 not required.

ED_006395_00002031-00010

QAPP Worksheet #3 & 5: Project Organizational and QAPP Distribution

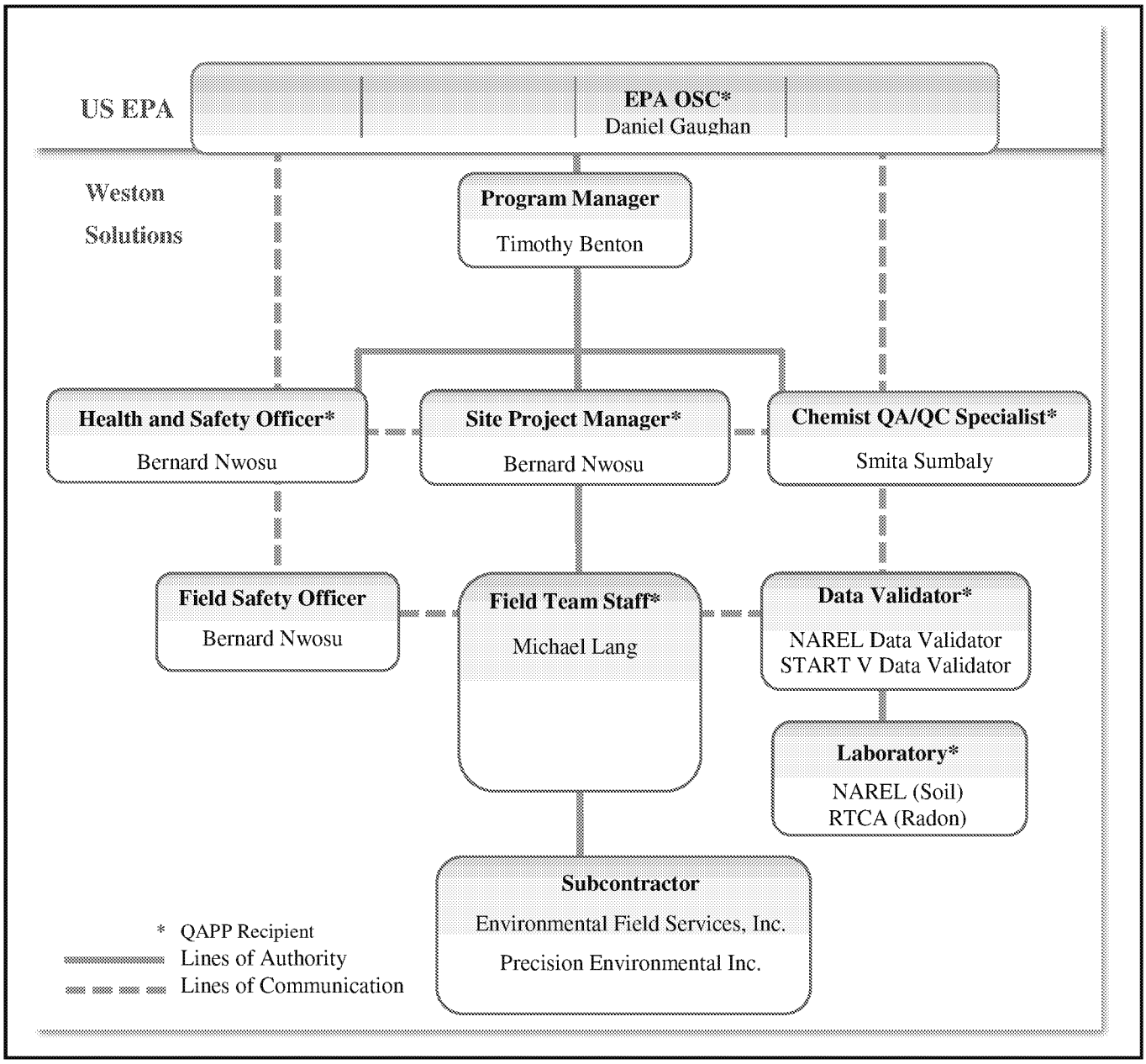

Acronyms:
EPA – U.S. Environmental Protection Agency
QA/QC – Quality Assurance/Quality Control
START V – Superfund Technical Assistance & Response Team V
OSC – On-Scene Coordinator
NAREL – National Analytical Radiation Environmental Laboratory
RTCA – Radon Testing Corporation of America

QAPP Worksheet #3 & 5: Project Organizational and QAPP Distribution (Concluded)

QAPP Recipient	Title	Organization	Telephone Number	Fax Number	E-mail Address	Document Control Number
Daniel Gaughan	OSC	EPA, Region II	(732) 906-6984	(732) 321-4350	Gaughan.Daniel@epa.gov	STARTV-01-F-0018
Bernard Nwosu	SPM/HSO	Weston Solutions, Inc., START V	(732) 585-4413	NA	Ben.Nwosu@WestonSolutions.com	STARTV-01-F-0018
Michael Lang	Field Personnel	Weston Solutions, Inc., START V	(732) 585-4437	NA	Michael.Lang@WestonSolutions.com	STARTV-01-F-0018
Smita Sumbaly	QAO	Weston Solutions, Inc., START V	(732) 585-4410	NA	S.Sumbaly@WestonSolutions.com	STARTV-01-F-0018
Site TD File	START V Site TD File	Weston Solutions, Inc., START V	Not Applicable	Not Applicable	Not Applicable	-

EPA – U.S. Environmental Protection Agency
OSC – On-Scene Coordinator
SPM – Site Project Manager
START V – Superfund Technical Assistance & Response Team V
QAO – Quality Assurance Officer
HSO – Health & Safety Officer
NA – Not Applicable

QAPP Worksheet #4, 7 & 8: Personnel Qualification and Sign-off Sheet

Project Function	Specialized Training By Title or Description of Course	Training Provider	Training Date	Personnel / Groups Receiving Training	Personnel Titles / Organizational Affiliation	Location of Training Records / Certificates[1]	Date of Training
[Specify location of training records and certificates for samplers]							
QAPP Training	This training is presented to all START V personnel to introduce the provisions, requirements, and responsibilities detailed in the UFP QAPP. The training presents the relationship between the site-specific QAPPs, SOPs, work plans, and the Generic QAPP. QAPP refresher training will be presented to all employees following a major QAPP revision.	Weston Solutions, Inc., (In House Training)	As needed	All START V field personnel upon initial employment and as refresher training	Weston Solutions, Inc.	Within Division	February 2019
Health & Safety Training	Health and safety training will be provided to ensure compliance with Occupational Safety and Health Administration (OSHA) as established in 29 CFR 1910.120.	Weston Solutions, Inc., (In House Training)	Yearly at a minimum	All Employees upon initial employment and as refresher training every year	Weston Solutions, Inc.	Within Division	February 2019
Others	Scribe, ICS 100 and 200, and Air Monitoring Equipment Trainings provided to all employees	EPA ERT (In-House Training) FEMA (On-line Training) Weston Solutions, Inc., (In House training)	Upon initial employment and as needed				February 2019
	Dangerous Goods Shipping	Weston Solutions, Inc., (In House Training)	Every 3 years				April 2019

All team members are trained in the concepts and procedures in recognizing opportunities for continual improvement, and the approaches required to improve procedures while maintaining conformance with legal, technical, and contractual obligations.

[1]All members, including subcontractors, certifications are in possession of Health & Safety Officer.

QAPP Worksheet #4, 7 & 8: Personnel Qualification and Sign-off Sheet

Organization: Weston Solutions, Inc., START V

Name	Project Title/Role	Education and Experience Qualifications	Specialized Training/ Certifications	Organizational Affiliation	Signature	Date
Bernard Nwosu	SPM/HSO, START V	20+ years*	SPM, Field HSO, Sample collection and sample management	Weston Solutions, Inc.		9/5/2019
Michael Lang	Field Personnel, START V	3+ years*	Sample Collection/Sample Management	Weston Solutions, Inc.		9/5/2019
Smita Sumbaly	QAO, START V	30 years*	Chemist QA/QC Specialist	Weston Solutions, Inc.		9/5/2019

*All START V members, including subcontractor's resumes are in possession of START V Program Manager, EPA Project Officer, and Contracting officers.
SPM – Site Project Manager
START V – Superfund Technical Assistance & Response Team V
QAO – Quality Assurance Officer
HSO – Health & Safety Officer

Organization: EPA Region II

Name	Project Title/Role	Education and Experience Qualifications	Specialized Training/ Certifications	Organizational Affiliation	Signature	Date
Daniel Gaughan	EPA OSC	NA	All project coordination, direction and decision making.	EPA, Region II		

EPA – U.S. Environmental Protection Agency
OSC – On-Scene Coordinator

ED_006395_00002031-00014

QAPP Worksheet #6: Communication Pathways

Communication Drivers	Responsible Entity	Name	Phone Number	Procedure
Point of contact with EPA OSC	SPM, Weston Solutions, Inc., START V	Bernard Nwosu	(732) 585-4413	All technical, QA and decision-making matters in regard to the project (verbal, written or electronic)
Adjustments to QAPP	SPM, Weston Solutions, Inc., START V	Bernard Nwosu	(732) 585-4413	QAPP approval dialogue
Health and Safety On-Site Meeting	HSO, Weston Solutions, Inc., START V	Bernard Nwosu	(732) 585-4413	Explain Site hazards, personnel protective equipment, hospital location, etc.
Lab Data Quality Issues (including sample receipt variances and laboratory quality control variances)	RTCA Project Manager/ Precision Environmental Project Manager NAREL Project Manager	Kam Cichowski Tonya Hudson	(718) 383-2626 (334) 270-3433	Laboratory PMs will report any issues with project samples to the WESTON Chemist QA/QC Specialist within 1 business day of notification. The WESTON Chemist QA/QC Specialist will contact the field sampler if necessary to resolve sample receiving discrepancies.
Data verification and data validation issues	WESTON Data Validator WESTON CHP/Data Validator	Smita Sumbaly	(732) 585-4410	The WESTON Data Validators/CHP will review the data verification and validation.
Analytical Corrective Actions	WESTON Chemist QA/QC Specialist RTCA Project Manager/ Precision Environmental Project Manager NAREL Project Manager	Smita Sumbaly Kam Cichowski Tonya Hudson	(732) 585-4410 (718) 383-2626 (334) 270-3433	If laboratory corrective actions are necessary, the WESTON Chemist QA/QC Specialist will communicate with the Precision Environmental, Inc. PM for RTCA data and NAREL laboratory PM.
Data Tracking and Management, Release of Analytical Data	WESTON Chemist QA/QC Specialist WESTON SPM, Operations Manager	Smita Sumbaly Bernard Nwosu	(732) 585-4410 (732) 585-4413	The need for corrective actions will be determined by the SPM upon review of the data. No analytical data will be released prior to validation and all releases must be approved by the Chemist QA/QC Specialist, SPM and EPA OSC/TM.

OSC: On-Scene Coordinator
SPM: Site Project Manager
HSO: Health and Safety Officer
QA/QC: Quality Assurance/Quality Control
START V: Superfund Technical Assistance & Response Team V
NAREL: National Analytical Radiation Environmental Laboratory
RTCA: Radon Testing Corporation of America
CHP: Certified Health Physicist

ED_006395_00002031-00015

QAPP Worksheet #9: Project Planning Session Summary

Date of Planning Session: 08/09/2019 and 08/21/2019
Location: Telephone Conversation
Purpose: Scoping meeting for UFP-QAPP for EPA Region II START V

Name	Title	Affiliation	E-mail Address	Phone No.
Daniel Gaughan	EPA OSC	EPA, Region II	Gaughan.Daniel@epa.gov	(732) 906-6984
Bernard Nwosu	START V SPM	Weston Solutions, Inc., START V	Ben.Nwosu@westonsolutions.com	(732) 585-4413

Site-Specific Initial Scoping Meeting Notes/Comments:

Weston Solutions, Inc., Superfund Technical Assessment & Response Team V (START V) has been tasked by the U.S. Environmental Protection Agency, Region II (EPA) with providing Removal Assessment support for a non-intrusive ground radiological survey and radon and soil sampling at the 125 Kisco Avenue property (designated as Property C008) located in the vicinity of the Canadian Radium and Uranium Corp. Site (the Site). The objective of the survey and sampling events is to verify if there are radiation source areas at Property C008 which may be attributed to the Site.

The radiological survey will be performed by EPA's Environmental Response Team (ERT) using two setups including a Ludlum-2241 and a sodium iodide (NaI) 3x3 scintillator synced with the VIPER system (a wireless network-based communication systems, via an internet source) and a RSX1 system comprising a 4x4x16 NaI system connected to the RadAssist Software. Up to 15 radon samples will be collected by START V-procured, National Radon Proficiency Program (NRPP)-certified company from frequently occupied spaces in the buildings at Property C008. The NRPP-certified company will be responsible for deploying the canisters, picking up the canisters, and delivering to the assigned laboratory for radon analysis. Passive activated charcoal canisters will be utilized to conduct short-term radon sampling tests that will last a minimum of approximately 72 hours.

Prior to mobilizing to the Site, START V-procured drilling subcontractor will contact Dig Safely New York to conducted subsurface utilities mark-out in order to clear the locations within the right of way (ROW) areas. Following the completion of radiological survey at the Site, locations indicating the highest gamma screening measurements will be selected for soil sampling. START V drilling subcontractor will conduct subsurface utilities mark-out around all the proposed soil sampling locations prior to advancing soil borings with a Geoprobe®. Up to 10 soil borings will be advanced at the selected locations to depths of 8 feet below ground surface (bgs). The soil core extracted from each soil sample location will be screened at every 6-inch interval for gamma radiation using the Ludlum-2241 and NaI 3x3 scintillator setup. At least two soil samples will be collected from each soil core at intervals which exhibit the highest gamma readings and/or where a fill layer is observed and/or at the discretion of the EPA On-Scene Coordinator (OSC).

Up to 30 soil samples, including quality assurance/quality control (QA/QC) samples, will be collected during the sampling event. The boreholes will be backfilled in reverse order with the extracted soil in the cores, tamped down, and sealed with topsoil (for sample locations in bare

QAPP Worksheet #9: Project Planning Session Summary (Concluded)

soil/grassy areas) or asphalt patch (for sample locations on asphalt-paved areas). One rinsate blank will be collected at the end of each sampling day to demonstrate adequacy of decontamination of non-dedicated sampling equipment (*i.e.* Geoprobe® cutting shoe). The soil and rinsate samples will be submitted to the National Analytical Radiation Environmental Laboratory (NAREL) for analyses including isotopic thorium and isotopic uranium via alpha spectroscopy, radium-226 (Ra-226) and radium-228 (Ra-228) via 21-day ingrowth, and other gamma emitting radioisotopes via gamma spectroscopy. Site activities will be documented with digital photographs and noted in the Site field logbook. Sample management, including collecting and containerizing samples, entering of sample information into the EPA Scribe database, generating chain of custody record, and shipping soil samples to NAREL will be completed by START V.

Consensus Decisions Made:

The Removal Assessment is scheduled to begin on September 8, 2019 and would last approximately three days. The analytical results of the radon and soil samples will be compared against the EPA Site-Specific Action Levels in order determine the concentrations of radon in the buildings and verify if there are radiation source areas at Property C008 which may be attributed to the Site.

Action Items:

Action	Responsible Party	Due Date
Prepare CLP Analytical Request Form	SPM, START V	8/15/2019
Prepare START V Analytical Request Form	SPM, START V	Not Applicable
Develop Health and Safety Plan	SPM, START V	09/06/2019
Develop QAPP	SPM, START V	09/06/2019
Develop Work Plan (driller, sampler, survey, etc.)	SPM, START V	Not Applicable
Develop Equipment List	SPM, START V	09/06/2019
Develop Site-Specific Data Management Plan	SPM, START V	09/06/2019

QAPP Worksheet #10: Conceptual Site Model

Background Information:

The former Canadian Radium and Uranium (CRU) facility is located to the east of Kisco Avenue and to the west of railroad tracks in the Village of Mount Kisco, Westchester County, New York, in a primarily suburban residential and commercial area. The historic property on the Site is 2.72 acres, and includes the 103 Kisco Avenue property currently occupied by a landscaping business, and the 105 Kisco Avenue property previously occupied by a stone, masonry, and landscaping business which is currently closed and now being utilized to park cars from a local dealership. The Site is bounded by Kisco Avenue to the west, southwest, and northwest; railroad tracks to the south, east, and northeast; and a large, privately-owned warehouse to the north and northeast.

From 1943 until approximately 1966, the CRU facility operations included the recovery of uranium and other radioactive elements from uranium-bearing sludge, old instrumentation, and watch dials. The work at the CRU facility is possibly associated with the federal government's Manhattan Engineering District (Manhattan Project). From 1943 to the 1950s, the primary product of the CRU facility was uranium; subsequently, radium became the principal product until the facility's closure. According to a Village of Mount Kisco memorandum, in 1957, CRU pleaded guilty to charges of allowing three employees to be overexposed to radiation. From March 5, 1958, until sometime after May 19, 1961, decontamination procedures and expectations were established for the CRU facility.

In November and December 1966, the facility buildings (a two-story concrete block building and two smaller one-story concrete block buildings) were decontaminated and demolished. Removal of radioactive dirt to a depth of 12 inches was required on the CRU premises. The most contaminated demolition materials were disposed of by Nuclear Diagnostic Laboratories located in Peekskill, New York, while the less contaminated materials were disposed of at Croton Point Sanitary Landfill located in Croton-on-Hudson, New York. After decontamination and demolition, a post-operation survey was conducted by Isotopes, Inc. Two locations on the Haggerty Millwork wall, which originally shared a wall with the former CRU facility that was demolished during the 1966 decontamination and demolition process, were found above specifications. One contaminated location was removed by chiseling out the masonry of a wall. The second was a result of tailings from a leaking waste drum which CRU had stored on the second floor fire escape. Since contamination was low here, the area was sealed with 1 to 2 inches of mortar. Railroad Avenue was constructed where the main CRU building once stood and was put in place by the urban renewal efforts in the area. Between 1964 (pre-decontamination/demolition) and 1971 (post-decontamination/demolition), the building layout of the former CRU facility completely changed, and it is believed that none of the original CRU facility buildings remained after 1971.

On April 5, 1979, a local newspaper reported the 1957 death of the CRU plant manager due to leukemia from high radioactivity levels found in his body. On April 20, 1979, a survey was performed by the Assistant Commissioner of Health for Environmental Quality, Westchester Department of Health. Based on the surveys, the highest dose rates were found in a small portion of a locked, chain-link fenced area south of the old wood freight station on Railroad Avenue and east of the L. B. Richard's Lumber yard (*i.e.*, an area located adjacent to the railroad). All other elevated dose rates were found in areas covered by soil and vegetative growth.

QAPP Worksheet #10: Conceptual Site Model (Continued)

The 1979 investigation reported that the high readings were obtained from an area covering approximately one square yard (sq. yd.) of the property in an area not used by the public. In addition, the report indicated that the dose rates found did not pose a public health hazard to persons passing the fenced area, to persons working in buildings adjacent to the area, or to persons living across the railroad tracks to the east.

In a memorandum dated February 7, 1980, the Westchester County Health Department described investigation findings in more detail. The area in question was approximately 78 feet by 60 feet, enclosed by a chain-link fence located between the railroad tracks and a concrete paved area. The most significant contaminated area was a strip 15 feet by 5 feet, containing two separate "hot spots". A surface reading using an alpha probe survey meter measured 50 disintegrations per minute (dpm). Elevated readings several times above background were reported for an area extending about 50 feet south from the chain-link fence. The memorandum stated that the origin of this contamination was unknown and that it was not discovered in previous surveys.

In September 1993, the Bureau of Environmental Radiation Protection of the New York State Department of Health (NYSDOH) completed a survey of the Site; indoor radon measurements were collected (*i.e.*, office, show room, storage/sale floor) which documented a maximum concentration of 9.8 picocuries per liter (pCi/L), and the average of the different detectors was about 8.1 pCi/L. The NYSDOH also identified two outdoor areas where presence of radioactive materials were indicated at the back of Richard's Lumber, and the road that runs next to the railroad tracks and adjacent to a fence post inside the fenced portion of what appeared to be Richard's Lumber property on the south side of Railroad Avenue.

In 1994, EPA conducted an on-site inspection to measure radon levels, collect air and soil samples, and measure radiation exposure rates. The purpose of the investigation was to determine if conditions required immediate action and if the Site was eligible for long-term remediation under the federal Superfund Program. Elevated exposure rate measurements were documented on both the northern (10–700 microroentgens per hour [μR/hr]) and southern (10–240 μR/hr) portions of the Site. Radium-226 (Ra-226) concentrations in soil samples taken from the top 1.5 feet ranged from 3 to 150 picocuries per gram (pCi/g). All of the radon measurements were below EPA's guideline (*i.e.*, 4 pCi/L) and the air samples collected at the Site did not indicate any radioactive contamination.

In July 1998, a complete radiological survey of the Village of Mt. Kisco and Richard's Lumber (former CRU) was conducted by the New York State Department of Environmental Conservation (NYSDEC). The property owned by the Village of Mount Kisco (103 Kisco Avenue) was found to have contamination over one large unpaved area [approximately 4,000 to 5,000 square feet (ft^2)] and a few smaller areas. The 1998 report stated that on the Mt. Kisco property, the highest concentrations of radium observed were a few hundred pCi/g and that most of the contamination was in the top 1 foot of soil. The report stated that the distribution suggests that uranium-containing material was placed on the surface and then the area was leveled. A new road (Railroad Avenue) had been built where the CRU facility once stood; soil sampling completed near the road showed elevated concentration of radium a few feet below the surface.

QAPP Worksheet #10: Conceptual Site Model (Continued)

The NYSDEC reported that the distribution of radioactive material near the road appeared to be consistent with movement of soil as part of the building demolition and subsequent construction of the road. Sampling beneath the road surface was not performed. There is no documentation of shielding or other control measures implemented on the 103 Kisco Avenue property, though current conditions suggest that the property had been recently paved with asphalt (of an unknown thickness) or other cover materials.

The 1998 report further stated that the survey of the Richard's Lumber (105 Kisco Avenue) property indicated that radioactive materials were present under the parking lot, but no samples were taken beneath the asphalt. The highest concentration of radium at the Site was found just north of Railroad Avenue (approximately 6,000 pCi/g). A large part of the main outside storage area was reported to be contaminated with radium near the surface as well as within some soil profiles to depths of approximately 4 feet. Survey data suggested that the contamination stopped abruptly at the edges of the paved areas. Railroad Avenue showed count rates that were lower than background soils; NYSDEC attributed these results to absorption by the road surface material (*i.e.*, shielding). The July 1998 report indicated that radiation doses to workers or visitors to the Site as it was being used at the time were not significant. The Site location where the dose rate was highest was a small area near Richard's Lumber, just north of Railroad Avenue. Time spent at this location was small; therefore, the accumulated dose was also estimated to be small. The July 1998 report suggested that significant radium contamination was present on both Mt. Kisco and Richard's Lumber properties. The NYSDEC did not consider the Site to be fully characterized at the completion of the survey.

In September 2013, Weston Solutions, Inc., Site Assessment Team (SAT), performed an on-site reconnaissance and gamma radiation screening of the historic CRU property and other suspected areas of contamination. Background readings taken north and northeast of the Site in the right-of-way (ROW) area alongside Kisco Avenue showed background gamma radiation levels of approximately 7,500 counts per minute (cpm). The highest reading of 73,637 cpm was located on the 105 Kisco Avenue property. Most readings were below 2 times (2x) background. There were three areas with readings that exceeded 2x background, ranging from 30,000 cpm to 73,637 cpm. All three areas above 2x background were located in the back portion of the 105 Kisco Avenue property, east of the historic CRU facility. No signs of ground discoloration were observed.

In November 2013, SAT advanced eight boreholes to depths of 10 feet at the Site for gamma screening and soil sample collection. Using a gamma scintillation meter (Ludlum 2221 Scaler Ratemeter), field gamma screening data collected during the sampling event documented the gamma exposure rates at 6-inch depth intervals vertically down each sample location borehole. The soil samples collected represented the highest levels of gamma radiation recorded for each borehole. The soil samples were analyzed for isotopic thorium (thorium-228, thorium-230 and thorium-232), isotopic uranium (uranium-233/234, uranium-235/236 and uranium-238), Ra-226, and Ra-228. Analytical results from the sampling effort suggested that there was measureable residual contamination remaining at the Site.

QAPP Worksheet #10: Conceptual Site Model (Continued)

In August 2015, EPA and Weston Solutions, Inc., Removal Support Team 3 (RST 3), currently START V, conducted an extensive Removal Assessment event at the Site, which included a ground radiological survey, radon and soil sampling at the Metropolitan Transit Authority (MTA), Milepost 136, 103 Kisco Avenue (Property C001), Hickory Homes and Properties, Inc., 103 Kisco Avenue (Property C002), and 105 Kisco Avenue (Property C003) which was occupied at the time by New York Stone and Building Supply. Ground radiological survey and soil sampling was conducted at an off-site background location (comprising a strip mall), 145-159 Kisco Avenue (Property C004). Background gamma readings were taken at the off-site background location using Ludlum-2241 equipped with a NaI 2x2 scintillator, fluke photoionization chamber (FPIC), and high pressure ion chamber (HPIC). Background gamma readings taken with each instrument were as follows: Ludlum-2241 (7,500 - 9,500 cpm), FPIC (9 - 12 μR/hr at waist height and 11 - 13 μR/hr at contact), and HPIC (8.9 μR/hr). Gamma radiation measurements collected with the Ludlum-2241 were more than 2x background at six of the 11 soil sampling locations selected throughout the Site, with values ranging from 20,000 to 180,000 cpm. At Property C003, above-background gamma readings (12,000 to 15,000 cpm) were observed in the southeast corner of the warehouse located northeast on the property. Gamma measurements collected with the FPIC indicated above-background values ranging from 9 to 15 μR/hr at waist level and 14 to 51 μR/hr at contact in the Electrical Room of the main building, and from 14 to 16 μR/hr at waist level and 9 to 15 μR/hr at contact in the southeast corner of the warehouse located northeast on the property. Gamma measurements collected with the HPIC indicated above-background value of 14 μR/hr in the Electrical Room of Property C003 and at six of the 11 soil sampling locations throughout the Site, with values ranging from 14.6 to 36 μR/hr. Radon/thoron measurements collected with RAD7 radon/thoron detectors did not indicate any elevated readings in exterior on-site locations.

On August 3 through 7, 2015, RST 3 procured the services of a NRPP-certified company to conducted pre-mitigation radon sampling in all the on-site buildings at Properties C001 through C003. Passive activated charcoal canisters (radon canisters) were used to conduct short-term radon sampling tests that lasted a minimum of approximately 72 hours. Radon testing locations were focused on frequently occupied spaces in each on-site building. Bathrooms, kitchens, utility closets, and hallways were not tested to avoid biased results. Analytical results were compared with EPA Site-Specific Action Level of 4.0 pCi/L for radon. Based on the analytical results, radon concentrations did not exceed the EPA Site-Specific Action Level in any living spaces sampled at Properties C001 and C002. However, in Property C003, analytical results indicated radon concentrations above the EPA Site-Specific Action Level in 11 of the 13 samples, including one duplicate, collected from the main building, with concentrations ranging from 0.6 to 19.5 pCi/L. In addition, analytical results exceeded the EPA Site-Specific Action Level in two samples collected from the southeast corner of the warehouse located on the far northeast portion of Property C003, with concentration ranging from 2.6 to 5.2 pCi/L. Based on the analytical results from the August 2015 radon sampling event, in October 2015, a radon mitigation system was installed in the main building of Property C003 by the owners, following which a post-remedial radon sampling event was conducted by EPA and RST 3. Analytical results indicated radon concentrations below the EPA Site-Specific Action Level throughout the living spaces in the main building of Property C003.

QAPP Worksheet #10: Conceptual Site Model (Continued)

During the August 2015 event, RST 3 collected a total of 13 soil samples, including two field duplicates, from 11 soil borings advanced to depths 4 feet bgs throughout the Site. Soil samples were collected from the interval exhibiting the highest level of gamma radiation (based on Ludlum-2241 screening data) and/or where a fill layer was observed and/or at the discretion of the EPA On-Scene Coordinator (OSC). The sampling event was conducted in order to verify the presence of residual contamination and potential releases of radiation-containing material in soil associated with the former CRU facility. The soil samples were submitted for laboratory analyses of isotopic thorium, isotopic uranium, and other alpha emitting actinides via alpha spectroscopy Health and Safety Laboratory (HASL)-300 Method A-01-R; Ra-226 (21-day ingrowth), Ra-228, and other gamma emitting radioisotopes via gamma spectroscopy EPA Method GA-01-R; and target analyte (TAL) metals, including mercury. Analytical results indicated that concentrations of Ra-226 exceeded the calculated EPA Site-Specific Action Level (provided in August 2015) of 4.06 pCi/g in two of the four soil samples collected from Property C002. Exceedance of Ra-226 in Property C002 was highest at 0 to 36 inches bgs with a concentration of 10.4 J (estimated concentration) pCi/g. Ra-226 was also detected above the EPA Site-Specific Action Level in all four soil samples, including one field duplicate, collected from Property C003. Exceedance of Ra-226 was highest at 0 to 24 inches bgs with a concentration of 129 J pCi/g. Lead concentration was above the EPA Removal Management Level (RML) of 400 milligrams per kilogram (mg/kg) in one soil sample with a concentration of 510 mg/kg. Although no Site-Specific Action Level was provided by EPA for the aqueous (rinsate) samples, based on the analytical results, radioisotope concentrations were generally, not detected.

In April 2016, RST 3 collected a total of 103 soil samples, including five field duplicates, from 20 soil borings at every 6-inch interval up to 4 feet bgs in 15 locations and up to 8 feet bgs in five locations throughout the Site. The sampling event was conducted to identify additional source areas of radiological material at the Site. The soil samples were submitted for laboratory analyses of isotopic thorium, isotopic uranium, and other alpha emitting actinides via alpha spectroscopy HASL-300 Method U-02, radium-226 (21-day ingrowth), radium-228, and other gamma emitting radioisotopes via gamma spectroscopy EPA Method 901.1. Analytical results indicated that concentrations of Ra-226 exceeded the EPA Site-Specific Action Level (revised in April 2016) of 2.52 pCi/g in eight of the 25 soil samples collected from three locations at Property C002. Exceedance of Ra-226 ranged from 2.57 pCi/g to 89.39 pCi/g at 24 to 36 inches bgs. The concentration of Ra-226 was below the EPA Site-Specific Action Level in soil samples collected 0 to 12 inches bgs at all three soil sample locations. Analytical results indicated exceedance of Ra-226 above the EPA Site-Specific Action Level of 2.52 pCi/g in 32 of the 71 soil samples collected from 16 locations at Property C003. Exceedance of Ra-226 ranged from 2.79 pCi/g at 12 to 24 inches bgs to 926.1 pCi/g at 36 to 48 inches bgs. The concentration of Ra-226 was below the EPA Site-Specific Action Level in soil samples collected 0 to 12 inches bgs in 15 of the 16 soil sample locations.

In June 2016, EPA and the Department of Energy (DOE) independently conducted aerial overflights of the Site to determine the possibility of lateral spread of the radiation contamination. The DOE overflight indicated potential lateral spread to the west of the Site along Kisco Avenue. The EPA overflight indicated two other potential areas of interest.

QAPP Worksheet #10: Conceptual Site Model (Concluded)

One area was located immediately southeast of the Site off North Moger Avenue and the second approximately one half mile southwest of the Site located within the parking lot of Diplomat Towers (a residential condominium complex).

On December 12, 2016, EPA and RST performed a non-intrusive ground radiological survey of the two new areas of interest to verify if the prior aerial overflight information generated by EPA and DOE were accurate. The areas within the parking lot of the Diplomat Towers and the parking lot immediately adjacent to the Site on the eastern side of the railroad tracks and fronting on North Moger Avenue were surveyed. Background gamma readings ranged from 17 to 20 kilo counts per minute (kcpm). Based on the results of the ground radiological survey, gamma readings did not exceed 30 kcpm in both areas of interest, which is below 2x background.

ED_006395_00002031-00023

QAPP Worksheet #11: Project/Data Quality Objectives

1. State the Problem:

Radiological survey data from prior site investigations conducted by SAT and RST 3 identified elevated levels of gamma radiation at locations throughout the Site. In addition, radon sampling events conducted in living spaces of buildings associated with the Site indicated elevated levels of radon above the EPA Site-Specific Action Level of 4.0 pCi/L. Furthermore, analytical results from soil sampling events conducted as part of prior site investigation and Removal Assessment events indicated concentration of Ra-226 above the EPA Site-Specific Action Level of 2.52 pCi/g in soil samples respectively collected by SAT and RST 3 from locations throughout the Site.

Based on these findings, EPA is conducting a Removal Assessment event involving a ground radiological survey and radon and soil sampling at Property C008 located in the vicinity of the Site. The radon samples will be collected by START V-procured, NRPP-certified company from frequently occupied spaces in the buildings at Property C008 and submitted to the assigned laboratory for radon analysis. The results of the radiological survey will be used to determine areas on the property with elevated radioactivity measurements from which soil samples will be collected and submitted to the assigned laboratory to analyses. The objective of the Removal Assessment is to determine the concentrations of radon in the buildings and verify if there are radiation source areas at Property C008 which may be attributed to the Site.

2. Identify the Goals of the Study:

If the field measurements from the radiological surveys indicates elevated gamma radiation at locations on the property, then EPA will consider additional investigation of those areas.

If the analytical results from the radon sampling event indicates radon concentrations above the EPA Site-Specific Action Level, then EPA will consider installing a remediation system, and perform a post-remediation radon sampling in the buildings.

If the analytical results from the post-remediation sampling indicate normal radon levels, then no further action is required. EPA will inform the property owner accordingly.

If analytical results of post-remediation sampling indicates radon concentrations above the Site-Specific Action Level, then EPA will inform the property owner to consider other remediation options.

If the analytical results of the soil sampling event indicates concentrations of site-related contaminants, then EPA will inform the property owner and consider initiating a Removal Action.

3. Identify Information Inputs:

Up to 15 radon samples will be collected by START V-procured, NRPP-certified company from frequently occupied spaces in the buildings at Property C008. Following the completion of radiological survey, locations indicating the highest gamma screening measurements will be selected for soil sampling. Geoprobe technology will be utilized to advance up to 10 soil borings

ED_006395_00002031-00024

QAPP Worksheet #11: Project/Data Quality Objectives (Continued)

at the selected locations to depths of 8 feet bgs. The soil core extracted from each soil boring location will be screened at every 6-inch interval for gamma radiation using the Ludlum-2241 and a NaI 3x3 scintillator. At least two soil samples will be collected from each soil core at the intervals that exhibit the highest gamma readings and/or where a fill layer is observed and/or at the discretion of the EPA OSC. Up to 30 soil samples, including QA/QC samples, will be collected during the sampling event.

4. Define the Boundaries of the Study:

Overall project objectives include: To provide EPA with support for a ground radiological survey and radon and soil sampling at Property C008 in order to determine the concentrations of radon in the buildings and verify if there are radiation source areas on the property which may be attributed to the Site.

Who will use the data? Data will be used by EPA, Region II OSC.

5. Develop the Analytic Approach:

Analytical Techniques:
Radon by EPA Method 402-R-92-004;
Isotopic Thorium by Alpha Spectroscopy via NAREL ACT-02FTH
Isotopic Uranium by Alpha Spectroscopy via NAREL ACT-02F-U
Other gamma emitting isotopes by Gamma Spectroscopy via NAREL GM-01-RA
Ra-226 and Ra-228 via 21-day ingrowth.

Type of Data: Definitive data for radon and soil samples.

Matrix: Air and Soil

Parameters:
Air Samples: Radon
Soil/Aqueous Samples: Isotopic thorium (Th-), including Th-227, Th-228, Th-230, and Th-232; isotopic uranium (U-), including U-234, U-235, and U-238; other gamma emitting isotopes, including bismuth-207 (Bi-207), bismuth-212 (Bi-212), bismuth-214 (Bi-214), cesium-137 (Cs-137), europium-155 (Eu-155), potassium-40 (K-40), lead-210 (Pb-210), lead-212 (Pb-212), lead-214 (Pb-214), Ra-226, Ra-228, Th-234, thallium-208 (Tl-208), and U-235.

Survey/Sampling Equipment:
The radiological survey will be performed using two setups including a Ludlum-2241 and a sodium iodide (NaI) 3x3 scintillator synced with the VIPER system and a RSX1 system comprising a 4x4x16 NaI system connected to the RadAssist Software. Soil borings will be advance using Geoprobe® with macrocore and acetate sleeves. Soil samples will be collected using dedicated plastic scoops, re-sealable plastic bags, and plastic sample jars. Rinsate samples will be collected in dedicated plastic sample containers.

Access Agreement: Obtained by EPA, Region II OSC.

QAPP Worksheet #11: Project/Data Quality Objectives (Concluded)

How much data are needed? Background readings for the ground radiological survey. Up to 15 radon samples will be collected by a NRPP-certified company. Up to 30 soil samples, including QA/QC samples, will be collected from the 10 soil boring locations. One rinsate sample will be collected daily.

6. Specify Performance or Acceptance Criteria:

How "good" does the data need to be in order to support the environmental decision?
Sampling/analytical measurement performance criteria (MPC) for Precision, Accuracy, Representativeness, Completeness, and Comparability (PARCC) parameters will be established. Refer to Worksheet #12, criteria for performance measurement for definitive data.

Where, when, and how should the data be collected/generated?

All sample locations will be determined in the field by the EPA OSC based on the radiological survey results. The sampling event is scheduled to begin on September 8, 2019, and will be completed in approximately three days. Radon canister placement and deployment will be conducted by NRPP-certified company in accordance with the guidelines presented in the American National Standards Institute (ANSI)/American Association of Radon Scientists and Technologists (AARST)*Protocol for Conducting Radon and Radon Decay Product Measurements in Multifamily Buildings* (MAMF 2012) and as directed by the EPA OSC. All field and sampling activities will be performed in accordance with methods outlined in EPA's ERT/Scientific, Engineering, Response and Analytical Services (SERAS) contractor's Standard Operating Procedures (SOPs).

7. Develop the Detailed Plan for Obtaining Data

Who will collect and generate the data?
The radon samples will be collected by START V-procured, NRPP-certified company, Precision Environmental, Inc., and soil samples will be collected by START V. Radon samples will be analyzed by a laboratory procured by NRPP-certified company, Radon Testing Corporation of America (RTCA), and soil samples will be analyzed by NAREL. Radon analytical data will be validated by START V data validation personnel and soil analytical data will be validated by Weston CHP/data validation personnel.

How will the data be reported? All data will be reported by the assigned laboratory (Preliminary, Electronic, and Hard Copy format). The Site Project Manager will provide a Sampling Trip Report, Status Reports, Maps/Figures, Analytical Report, and Data Validation Report to the EPA OSC.

How will the data be archived? Electronic data deliverables will be archived in a Scribe database. Non-CLP data will be archived in EPA's document control room.

ED_006395_00002031-00026

QAPP Worksheet #12: Measurement Performance Criteria
QAPP Worksheet #12A: Radon

Matrix: Air
Analytical Group/Method: Radon/EPA Method 402-R-92-004
Concentration Level: Low

Data Quality Indicators (DQIs)	QC Sample or Measurement Performance Activity	Measurement Performance Criteria
Precision	Laboratory Duplicates	Relative Percent Difference (RPD) of +28% warning level and 30% control limit for duplicates of 4.0 pCi/L or greater. For duplicates of less than 4.0 pCi/L, the RPD warning level is 50% and the control limit is 67%.
Precision	Field Duplicates	RPD – 28%
Accuracy	Field Blank	No analyte > DL
Accuracy	Data Completeness	± 25% of the total value.

QAPP Worksheet #12: Measurement Performance Criteria
QAPP Worksheet #12B – Isotopic Thorium

Matrix: Soil/Aqueous
Analytical Group/Method: Isotopic Thorium/Alpha Spectroscopy via NAREL ACT-02FTH
Concentration Level: Low/Medium

Data Quality Indicators (DQIs)	QC Sample or Measurement Performance Activity	Measurement Performance Criteria[1]
Analytical Precision	Laboratory Sample Duplicates or Laboratory Control Sample Duplicates	$\lvert$ z-score $\rvert < 3$
Analytical Accuracy/Bias	Laboratory Control Samples	$\lvert$ z-score $\rvert < 3$
Contamination	Method blank	Refer to 13.1 of QA/QAM-1 on page 57

[1]NAREL Radiochemistry Quality Assurance Manual QA/QAM-1, Revision 11, January 31, 2019.

ED_006395_00002031-00028

QAPP Worksheet #12: Measurement Performance Criteria
QAPP Worksheet #12C – Isotopic Uranium

Matrix: Soil/Aqueous
Analytical Group/Method: Isotopic Uranium/Alpha Spectroscopy/NAREL ACT-02F-U
Concentration Level: Low/Medium

Data Quality Indicators (DQIs)	QC Sample or Measurement Performance Activity	Measurement Performance Criteria
Analytical Precision	Laboratory Sample Duplicates or Laboratory Control Sample Duplicates	$\lvert$ z-score $\rvert < 3$
Analytical Accuracy/Bias	Laboratory Control Samples	$\lvert$ z-score $\rvert < 3$
Contamination	Method blank	Refer to 13.1 of QA/QAM-1 on page 57

[1]NAREL Radiochemistry Quality Assurance Manual QA/QAM-1, Revision 11, January 31, 2019.

QAPP Worksheet #12: Measurement Performance Criteria
QAPP Worksheet #12D – Gamma Spectroscopy

Matrix: Soil/Aqueous
Analytical Group/Method: Gamma Spectroscopy/NAREL GM-01-RA
Concentration Level: Low/Medium

Data Quality Indicators (DQIs)	QC Sample or Measurement Performance Activity	Measurement Performance Criteria
Analytical Precision	Laboratory Sample Duplicates or Laboratory Control Sample Duplicates	| z-score | < 3
Analytical Accuracy/Bias	Laboratory Control Samples	| z-score | < 3
Contamination	Method blank	Refer to 13.1 of QA/QAM-1 on page 57

[1]NAREL Radiochemistry Quality Assurance Manual QA/QAM-1, Revision 11, January 31, 2019.

QAPP Worksheet #13: Secondary Data Criteria and Limitations

Sources and types of secondary data include but are not limited to the following:

Data Type	Data Source (originating organization, report title and date)	Data Uses Relative to Current Project	Factors Affecting the Reliability of Data and Limitations on Data Use
EPA Removal Assessment, May 2017.	RST 3 Phase III Removal Assessment Trip Report, May 2017 DCN: RST3-03-D-0206	To identify additional source areas and determine if the groundwater was being impacted by on-site radioactive materials.	None
EPA Removal Assessment, August 2015.	RST 3 Removal Assessment Trip Report, July 2016. DCN: RST3-03-D-0001	To verify the presence of residual radiological contamination in soil, identify potential releases of radiation-containing materials in soil and fill material, determine additional radiation source areas, and delineate the extent of on-site radiological contamination	None
EPA Removal Assessment, April 2016.	RST 3 Phase II Removal Assessment Trip Report, November 2016. DCN: RST3-03-D-0296	To identify additional source areas and further delineate on-site radioactive contamination.	None

QAPP Worksheet #14 & 16: Project Tasks and Schedules

Activity	Responsible Party	Planned Start Date	Planned Completion Date	Deliverable(s)	Deliverable Due Date
Develop Project-Specific Health and Safety Plan (HASP)	WESTON	8/26/2019	8/30/2019	HASP	9/6/2019
Develop Project-Specific QAPP	WESTON	8/26/2019	8/30/2019	QAPP	9/6/2019
Coordination with EPA Region 2 RSCC for Regional or CLP analytical support or procure WESTON-subcontracted laboratory for analytical services	WESTON	8/15/2019	8/15/2019	Region II RSCC documentation (laboratory assignment) or WESTON Purchase Order for analytical services	NA
Scoping meeting Operations Manager, SPM, HSO, and sampling team to discuss data collection activities, objectives, and logistics	WESTON	9/4/2019	9/4/2019	Meeting Notes	NA
Mobilization/Demobilization	WESTON	9/8/2019	9/11/2019	Field Notes	NA
Sample Collection Tasks	WESTON	9/8/2019	9/11/2019	Field Notes	9/11/2019
Analytical Tasks	WESTON	9/11/2019	9/25/2019	Field Notes/Laboratory Reports	9/25/2019
Quality Control Tasks	WESTON	9/23/2019	9/23/2019	Report of Analyses/Data Package	9/23/2019
Data Validation	WESTON	9/23/2019	10/31/2019	Validation Summary Report	10/31/2019
Summarize Data	WESTON	10/31/2019	10/31/2019	Project-Specific Summary Report/Table	10/31/2019
Develop Project-Specific Report	WESTON	11/06/2019	11/06/2018	Draft Project-Specific Report	11/06/2019
Address EPA comments on Draft Project-Specific Report	WESTON	11/13/2019	11/13/2019	Project-Specific Report	11/13/2019
Contract Closeout	WESTON	12/2/2019	6/30/2020	Contract Closeout Report	6/30/2020

ED_006395_00002031-00032

QAPP Worksheet #14 & 16: Project Tasks and Schedules (Continued)

Sampling Tasks:

START V is tasked with providing support for a ground radiological survey and radon and soil sampling at Property C008 located in the vicinity of the Site. Up to 15 radon samples will be collected by Precision Environmental, Inc. from frequently occupied spaces in the buildings at Property C008. Passive activated charcoal canisters will be utilized to conduct short-term radon sampling tests that will last a minimum of approximately 72 hours. The radon samples will submitted by Precision Environmental, Inc. to RTCA for radon analysis. Following the completion of radiological survey, locations indicating the highest gamma screening measurements will be selected for soil sampling. Geoprobe technology will be utilized to advance up to 10 soil borings at the selected locations to depths of 8 feet bgs. The soil core extracted from each soil boring location will be screened at every 6-inch interval for gamma radiation using the Ludlum-2241 and a NaI 3x3 scintillator. At least two soil samples will be collected from each soil core at the intervals that exhibit the highest gamma readings and/or where a fill layer is observed and/or at the discretion of the EPA OSC. Up to 30 soil samples, including QA/QC samples, will be collected and submitted to NAREL for analyses, including isotopic thorium (Th-227, Th-228, Th-230, Th-232), isotopic uranium (U-234, U-235, U-238), other gamma emitting isotopes (Bi-207, Bi-212, Bi-214, Cs-137, Eu-155, K-40, Pb-210, Pb-212, Pb-214, Ra-226, Ra-228, Th-234, Tl-208, U-235), Ra-226 and Ra-228 via 21-day ingrowth.

Analysis Tasks:

Air – Radon, EPA Method 402-R-92-004
Soil/Aqueous – Isotopic Thorium, Alpha Spectroscopy/NAREL ACT-02FTH
Soil/Aqueous – Isotopic Uranium, Alpha Spectroscopy/NAREL ACT-02F-U
Soil/Aqueous – Other gamma emitting isotopes, Gamma Spectroscopy/NAREL GM-01-RA
Soil/Aqueous – Ra-226 and Ra-228 via 21-day ingrowth

Decontamination:

Soil samples will be collected using non-dedicated sampling equipment (i.e., Geoprobe® cutting shoes); therefore, the decontamination of non-dedicated sampling equipment will be necessary. A rinsate blank will be collected each day of sampling in order to verify the adequacy of the decontamination process for the non-dedicated sampling equipment.

Quality Control Tasks:

All samples, including radon and soil samples, and rinsate blanks, are being collected for definitive data and QA/QC purposes. For radon sampling, co-located radon canister (field duplicate), field blank, and office blank, will be collected at the rate of 10% of the total field samples. For soil sampling, field duplicate and additional sample volumes designated as matrix spike/matrix spike duplicate (MS/MSD), will be collected at the rate of one per 20 field samples. One rinsate blank will be collected daily.

QAPP Worksheet #14 & 16: Project Tasks and Schedules (Continued)

Data Management Tasks:

Activities under this project will be reported in status and trip reports and other deliverables (e.g., analytical reports, final reports) described herein. Activities will also be summarized in appropriate format for inclusion in monthly and annual reports. The following deliverables will be provided under this project:

Trip Report: A trip report will be prepared to provide a detailed accounting of what occurred during each sampling mobilization. The trip report will be prepared within two weeks of the last day of each sampling mobilization. Information will be provided on time of major events, dates, and personnel on-site (including affiliations).

Maps/Figures: Maps depicting site layout, contaminant source areas, and sample locations will be included in the trip report, as appropriate.

Analytical Report: An analytical report will be prepared for samples analyzed under this plan. Information regarding the analytical methods or procedures employed, sample results, QA/QC results, chain-of-custody documentation, laboratory correspondence, and raw data will be provided within this deliverable.

Data Review: A review of the data generated under this plan will be undertaken. The assessment of data acceptability or usability will be provided separately, or as part of the analytical report.

Documentation and Records:

All sample documents will be completed legibly, in ink. Any corrections or revisions will be made by lining through the incorrect entry and by initialing the error.

Field Logbook: The field logbook is essentially a descriptive notebook detailing site activities and observations so that an accurate account of field procedures can be reconstructed in the writer's absence. Field logbook will be bound and paginated. All entries will be dated and signed by the individuals making the entries, and should include (at a minimum) the following

1. Site name and project number
2. Name(s) of personnel on-site
3. Dates and times of all entries (military time preferred)
4. Descriptions of all site activities, site entry and exit times
5. Noteworthy events and discussions
6. Weather conditions
7. Site observations
8. Sample and sample location identification and description*
9. Subcontractor information and names of on-site personnel
10. Date and time of sample collections, along with chain of custody information
11. Record of photographs

QAPP Worksheet #14 & 16: Project Tasks and Schedules (Concluded)

12. Site sketches
13. GPS Coordinates for each sample location

* The description of the sample location will be noted in such a manner as to allow the reader to reproduce the location in the field at a later date.

Sample Labels: Sample labels will clearly identify the particular sample, and should include the following:

1. Site/Project number
2. START V Sample identification number.
3. Sample collection date and time
4. Analytical Parameters
5. Sample preservation

Sample labels will be written in indelible ink and securely affixed to the sample container. Tie-on labels can be used if properly secured.

Custody Seals: Custody seals demonstrate that a sample container has not been tampered with or opened. The individual in possession of the sample(s) will sign and date the seal, affixing it in such a manner that the container cannot be opened without breaking the seal. The name of this individual, along with a description of the sample packaging, will be noted in the field logbook.

Assessment/Audit Tasks: No performance audit of field operations is anticipated at this time. If conducted, performance and system audit will be in accordance with the project plan.

Data Review Tasks: All radon sample analytical data will be validated by START V data validator. All soil and aqueous sample analytical data will be validated by Weston CHP/data validator.

The data generated under this QA/QC Sampling Plan will be evaluated according to guidance in the Uniform Federal Policy for Implementing Environmental Quality Systems: Evaluating, Assessing and Documenting Environmental Data Collection and Use Programs Part 1: UFP-QAPP (EPA-105-B-04-900A, March 2005); Part 2B: Quality Assurance/Quality Control Compendium: Minimum QA/QC Activities (EPA-105-B-04-900B, March 2005). Laboratory analytical results will be assessed by the data reviewer for compliance with required precision, accuracy, completeness, representativeness, and sensitivity.

Laboratory analytical results will be assessed by the data reviewer for compliance with required precision, accuracy, completeness, representativeness, and sensitivity.

ED_006395_00002031-00035

QAPP Worksheet #15: Project Action Limits and Laboratory-Specific Detection/Quantitation Limits
QAPP Worksheet #15A – Radon

Matrix: Air
Analytical Group/Method:
Concentration Level: Low

Analyte	CAS Number	Project Quantitation Limit	Method CRQLs (Units)	NAREL Method Detection Limit (Units)
Radon	10043-92-2	4.0 pCi/L	4.0 pCi/L	4.0 pCi/L

pCi/L – Picocuries per liter

QAPP Worksheet #15: Project Action Limits and Laboratory-Specific Detection/Quantitation Limits
QAPP Worksheet #15B – Isotopic Thorium

Matrix: Soil/Aqueous
Analytical Group/Method: Isotopic Thorium/Alpha Spectroscopy via NAREL ACT-02FTH
Concentration Level: Low/Medium

Analyte	CAS Number	Project Quantitation Limit	Method CRQLs (Units)	NAREL Method Detection Limit (Units)
Thorium-227 (Th-227)	15623-47-9	NA	NA	*
Thorium-228 (Th-228)	14274-82-9	NA	NA	*
Thorium-230 (Th-230)	14269-63-7	NA	NA	0.14 pCi/g
Thorium-232 (Th-232)	7440-29-1	NA	NA	0.10 pCi/g

*NAREL does not provide MDC for Th-227 and Th-228
pCi/g – Picocuries per gram
NA – Not Applicable

ED_006395_00002031-00037

QAPP Worksheet #15: Project Action Limits and Laboratory-Specific Detection/Quantitation Limits
QAPP Worksheet #15B – Isotopic Uranium

Matrix: Soil/Aqueous
Analytical Group/Method: Isotopic Uranium/Alpha Spectroscopy via NAREL ACT-02-U
Concentration Level: Low/Medium

Analyte	CAS Number	Project Quantitation Limit	Method CRQLs (Units)	NAREL Method Detection Limit (Units)
Uranium-234 (U-234)	13966-29-5	NA	NA	0.10 pCi/g
Uranium-235 (U-235)	15117-96-1	NA	NA	0.12 pCi/g
Uranium-238 (U-238)	7440-61-1	NA	NA	0.10 pCi/g

NA – Not Applicable
pCi/g – Picocuries per gram

ED_006395_00002031-00038

QAPP Worksheet #15: Project Action Limits and Laboratory-Specific Detection/Quantitation Limits
QAPP Worksheet #15D – Gamma Spectroscopy

Matrix: Soil/Aqueous
Analytical Group/Method: Gamma Spectroscopy/NAREL GM-01-RA
Concentration Level: Low/Medium

Analyte	CAS Number	Project Quantitation Limit	Method CRQLs (Units)	NAREL Method Detection Limit (Units)
Bismuth-207 (Bi-207)	13982-38-2	NA	NA	1.0 pCi/g
Bismuth-212 (Bi-212)	14913-49-6	NA	NA	0.1 pCi/g
Bismuth-214 (Bi-214)	14733-03-0	NA	NA	0.1 pCi/g
Cesium-137 (Cs-137)	10045-97-3	NA	NA	0.1 pCi/g
Europium-155 (Eu-155)	14391-16-3	NA	NA	1.0 pCi/g
Potassium-40 (K-40)	13966-00-2	NA	NA	0.2 pCi/g
Lead-210 (Pb-210)	14255-04-0	NA	NA	1.0 pCi/g
Lead-212 (Pb-212)	7439-92-1	NA	NA	0.1 pCi/g
Lead-214 (Pb-214)	15067-28-4	NA	NA	0.1 pCi/g
Radium-226 (Ra-226)*	13982-63-3	NA	NA	0.1 (Bi/Pb-214) pCi/g
Radium-228 (Ra-228)	15262-20-1	NA	NA	0.1 (Ac-228) pCi/g
Thorium-234 Th-234)	15065-10-8	NA	NA	1.0 pCi/g
Thallium-208 (Tl-208)	14913-50-9	NA	NA	0.1 pCi/g
Uranium-235 (U-235)	15117-96-1	NA	NA	0.2 pCi/g
Uranium-238 (U-238)	7440-61-1	NA	NA	Use Pb/Bi-214

*Ra-226 via 21 day ingrowth
pCi/g – Picocuries per gram
NA – Not Applicable

QAPP Worksheet #17: Sampling Design and Rationale

As part of the Removal Assessment of the Site, START V has been tasked with providing support for a ground radiological survey and radon and soil sampling at Property C008 in order to determine the concentrations of radon in the buildings and verify if there are radiation source areas on the property which may be attributed to the Site. All field sampling activities will be conducted in accordance with EPA ERT/SERAS SOP No. 2001: *General Field Sampling Guidelines*.

In accordance with the guidelines presented in the ANSI/AARST *Protocol for Conducting Radon and Radon Decay Product Measurements in Multifamily Buildings* (MAMF 2012) and as directed by the OSC, START V procured, NRPP-certified company, Precision Environmental, Inc., will provide field support for identifying radon canister placement locations in living spaces of on-site buildings, placing the canisters, picking up the canisters, and delivering to RTCA for radon analysis. Passive activated charcoal canisters will be utilized to conduct short-term radon sampling tests that will last a minimum of approximately 72 hours. Weather information including, temperature, humidity, wind speed and direction, and barometric pressure will be documented during canister deployment and pickup. Radon testing locations will be focused on frequently occupied spaces in each on-site building. Bathrooms, kitchens, utility closets, and hallways will not tested to avoid biased results. The canisters will be raised no less than approximately 20 inches above the ground, and where possible, away from draft and vents. The samples will be collected for definitive data and QA/QC objectives. Field duplicate (co-located samples), field blank, and office blank will be collected at a rate of 10% of the total field samples.

Soil sampling will be conducted in accordance with EPA's ERT/SERAS contractor's SOP 2012: *Soil Sampling*. Prior to mobilizing to the Site, Dig Safely New York will be contacted by the START V-procured driller to conduct subsurface utilities mark-out in order to clear the locations within the ROW areas. Locations exhibiting significantly high radioactivity measurements during ground radiological survey will be identified and flagged as soil sampling locations by the EPA OSC. In accordance with EPA's ERT/SERAS SOP 2050: *Geoprobe Operation,* START V drilling subcontractor will conduct subsurface utilities mark-out around all the proposed soil sampling locations prior to advancing soil borings with a Geoprobe®. Soil borings will be advanced to depths of 8 feet bgs. The soil cores extracted from each soil sample location will be screened at every 6-inch interval for gamma radiation using the Ludlum-2241 and a NaI 3x3 scintillator. At least two soil samples will be collected from each soil core at the intervals that exhibit the highest gamma readings and/or where a fill layer is observed and/or at the discretion of the EPA OSC. The soil samples will be collected in re-sealable plastic bags using dedicated, disposable plastic scoops. The samples will be homogenized in the plastic bags prior to transferring to 32 ounce (oz) plastic jars. The boreholes will be backfilled in reverse order with the extracted soil in the cores, tamped down, and sealed with topsoil. Up to 30 soil samples, including QA/QC samples, will be collected.

Decontamination of non-dedicated sampling equipment (*i.e.* Geoprobe® cutting shoe) will be performed in accordance with EPA's ERT/SERAS SOP No. 2006: *Sample Equipment Decontamination*, and will include: Alconox detergent and potable water scrub, potable water rinse, DI water rinse, isopropyl alcohol rinse, deionized (DI) water rinse, steam clean, and air dry. One rinsate blank will be collected in 4x1 liter (L) plastic bottles at the end of each sampling day to demonstrate adequacy of decontamination of non-dedicated sampling equipment.

QAPP Worksheet #17: Sampling Design and Rationale (Concluded)

The soil and rinsate blanks will be analyzed by NAREL for isotopic thorium (Th-227, Th-228, Th-230, Th-232), isotopic uranium (U-234, U-235, U-238), other gamma emitting isotopes (Bi-207, Bi-212, Bi-214, Cs-137, Eu-155, K-40, Pb-210, Pb-212, Pb-214, Ra-226, Ra-228, Th-234, Tl-208, U-235), Ra-226 and Ra-228 via 21-day ingrowth.

This sampling design is based on information currently available and may be modified on-site in light of field screening results and other acquired information.

The following laboratories will provide the analyses indicated:

Lab Name/Location/Contact	Matrix	Parameters
Radon Testing Corporation of America (RTCA) 2 Hayes Street Elmsford, New York 10523 C/O Precision Environmental, Inc. 36-15A 23rd Street, LIC, NY 11106 Attn: Kam Cichowski Phone: 718-383-2626	Air	Radon
National Analytical Radiation Environmental Laboratory (NAREL) 540 South Morris Avenue, Montgomery, AL 36115 Attn: Tonya Hudson Phone: 334-270-3433	Soil/Aqueous	Alpha Spectroscopy/Isotopic thorium Th-227, Th-228, Th-230, Th-232 Alpha Spectroscopy/Isotopic uranium U-234, U-235, U-238 Gamma Spectroscopy: Bi-212, Bi-214, Cs-137, Eu-155, K-40, Pb-210, Pb-212, Pb-214, Ra-226, Ra-228, Th-234, Tl-208, U-235 Ra-226 and Ra-228 via 21-day ingrowth

Refer to Worksheet #20 for QA/QC samples, sampling methods, and SOPs.

QAPP Worksheet #18: Sampling Locations and Methods/SOP Requirements Table

The following information is project-specific and will be included in the site-specific QAPP.

Sampling Location	Matrix	(Units)	Sample Type No. of Samples (identify field duplicates)	Analyte/Analytical Group(s)	Sampling SOP Reference[1]	Comments
Up to 15	Air	pCi/L	14 (1)	Radon	SOP# 2001	Presence/absence of radon
Up to 30	Soil	pCi/g	28 (2)	Isotopic thorium, isotopic uranium, and other gamma emitting isotopes	SOP# 2001, 2012, 2050	Verify if there are radiation source areas on the property
Up to 2	Aqueous	µg/L	2 (0)	Isotopic thorium, isotopic uranium, and other gamma emitting isotopes	SOP# 2006	Demonstrate proper decontamination of non-dedicated sampling equipment

pCi/L – Picocuries per liter
pCi/g – Picocuries per gram
µg/L – Micrograms per liter
The website for EPA-ERT SOPs is: https://response.epa.gov/site/site_profile.aspx?site_id=2107

QAPP Worksheet #19 & 30: Sample Containers, Preservation, and Hold Times

Laboratory: RTCA, 2 Hayes Street. Elmsford, NY 10523 / Precision Environmental, Inc., 36-15A 23rd Street, LIC, NY 11106
POC: Kam Cichowski (Precision Environmental, Inc.), Phone: 718-383-2626
Laboratory: NAREL, 540 South Morris Avenue, Montgomery, AL 36115
POC: Tonya Hudson, Phone: 334-270-3433, Email: hudson.tonya@epa.gov
List Any Required Accreditations/Certifications: Not applicable.
Back-up Laboratory: Not Applicable
Sample Delivery Method: Fed Ex

Matrix	Analytical Group	Analytical and Preparation Method/SOP Reference[1]	Accreditation Expiration Date	Containers (number, size, and type)	Preservation Requirements (chemical, temperature, light protected)	Maximum Holding Time (preparation/ analysis)	Data Package Turnaround Time
Air	Radon	EPA Method 402-R-92-004 ANSI/AAST/ MAMF 2012	NA	Activated Charcoal Canister	None	None	7 days verbal 14 days written
Soil	Isotopic Thorium	NAREL ACT-02FTH	NA	1,000g 32oz Plastic Jar (wide mouth)	None	None	60 days
Soil	Isotopic Uranium	NAREL ACT-02F-U					
Soil	Other Gamma Isotopes	NAREL GM-01-RA					
Aqueous	Isotopic Thorium Isotopic Uranium Other Gamma Isotopes	NAREL ACT-02FTH NAREL ACT-02F-U NAREL GM-01-RA	NA	4x1L Plastic Bottle	HNO_3, pH<2	None	

*1,000 grams total soil for gamma, U, & TH will be enough. Plastic jars or doubled Ziplock bags are preferred to glass.

QAPP Worksheet #20: Field Quality Control Sample Summary

Matrix	Analytical Group	No. of Field Samples[1]	No. of Field Duplicates	No. of Extra Volume Laboratory QC (e.g., MS/MSD) Samples	No. of Field Blanks	No. of Equip. Blanks	No. of Trip. Blanks	No of others	Total No. of Samples to Lab
Air	Radon	Up to 13	1	NR	1	NR	NR	1	Up to1 5
Soil	Isotopic Thorium	Up to 28	2	2	NR	NR	NR	NR	30
Soil	Isotopic Uranium	Up to 28	2	2	NR	NR	NR	NR	30
Soil	Other Gamma Isotopes	Up to 28	2	2	NR	NR	NR	NR	30
Aqueous	Isotopic Thorium Isotopic Uranium Other Gamma Isotopes	NR	NR	NR	NR	2	NR	NR	2

NR – Not Required

QAPP Worksheet #21: Project Sampling SOP References Table

Reference Number	Title, Revision Date and/or Number	Originating Organization	Equipment Type	Modified for Project Work? (Y/N)	Comment
ANSI/AARST/ MAMF 2012	Protocol for Conducting Radon and Radon Decay Product Measurements In Multifamily Buildings, 2012	EPA	Site-Specific	N	NA
SOP#: 2001	General Field Sampling Guidelines (all media); Rev. 0.1, June 7, 2013	ERT/SERAS	Site-Specific	N	NA
SOP#: 2006	Sample Equipment Decontamination; Rev. 0.1, December 28, 2015	ERT/SERAS	Site-Specific	N	NA
SOP#: 2012	Soil Sampling; Rev. 0.1, July 11, 2001	ERT/SERAS	plastic scoops, aluminum trays, and appropriate sample jars	N	NA
SOP#: 2050	Geoprobe; Rev.0.1, June 25, 2015	ERT/SERAS	Downhole tooling	N	NA

See Attachment B for SOP # 2001, 2006, 2012, 2050 SOP # 1704
https://response.epa.gov/site/site_profile.aspx?site_id=2107

QAPP Worksheet #22: Field Equipment Calibration, Maintenance, Testing, and Inspection Table (Not Required)

Field Equipment	Calibration Activity	Maintenance Activity	Testing/ Inspection Activity	Frequency	Acceptance Criteria	Corrective Action	Responsible Person	SOP Reference

.

QAPP Worksheet #23: Analytical SOPs

Reference Number	Title, Revision Date, and/or Number	Definitive or Screening Data	Analytical Group	Instrument	Organization Performing Analysis	Modified for Project Work? (Y/N)
ANSI/AARST/ MAMF 2012	Radon analysis, via activated charcoal canisters	Definitive Data	Radon	Gamma Spectroscopy	RTCA	N
NC/SOP-8	NAREL ACT-02F-TH	Definitive Data	Soil/Aqueous	Alpha Spectroscopy	NAREL	N
NC/SOP-8	NAREL ACT-02F-U	Definitive Data	Soil/Aqueous	Alpha Spectroscopy	NAREL	N
AM/SOP-3	NAREL GAM-01-RA	Definitive Data	Soil/Aqueous	Gamma Spectroscopy	NAREL	N

QAPP Worksheet #24: Analytical Instrument Calibration Table

Instrument	Calibration Procedure	Frequency of Calibration	Acceptance Criteria	Corrective Action (CA)	Person Responsible for CA	SOP Reference
Gamma Spectroscopy	Energy and efficiency calibrations	After initial installation, annually and following maintenance that would affect calibration	Gamma Spectroscopy Detector Resolution - within +0.4 Full Width at Half Maximum (FWHM) of the value during the initial calibration Energy – within +1 keV of the known energies Efficiency – 90-110% of the efficiency determined during the initial calibration	Correct problem, re-calibrate and re-analyze any affected samples	Assigned Laboratory Personnel	RTCA, New York Gamma Spectroscopy SOP
HPGe	See Section 10.0 of SOP 9 (NC/SOP-10)	5 years	Delta values of ± 5% for FWHM & Efficiency	Root Cause Analysis	Instrument Administrator	NC/SOP-10
Alpha Spectrometers	Refer to NC/SOP-8 Section 10	5 years	Refer to NC/SOP-8 Section 10.5	Root Cause Analysis	Instrument Administrator	NC/SOP-8

ED_006395_00002031-00046

QAPP Worksheet #25: Analytical Instrument and Equipment Maintenance, Testing, and Inspection Table

Instrument/ Equipment	Maintenance Activity	Testing/Inspection Activity	Frequency	Acceptance Criteria	Corrective Action (CA)	Responsible Person for CA	SOP Reference[1]
Gamma Spectroscopy	As per instrument manufacturer's recommendations	As per instrument manufacturer's recommendations; check connections	As per instrument manufacturer's recommendations	Acceptable re-calibration; see RTCA Gamma Spectroscopy SOP	Inspect the system, correct problem, re-calibrate and/or reanalyze samples.	RTCA Gamma Spectroscopy Technician	RTCA, New York Gamma Spectroscopy SOP
HPGe		Contamination Check	Weekly + each day before & after detector is used	Control Chart Limits	Root Cause Analysis	Instrument Administrator	AM/SOP-3
HPGe		QC Check	Weekly + each day before & after detector is used	Energy - ±1 keV FWHM – 30% above & below the mean Efficiency – control chart limits	Root Cause Analysis	Instrument Administrator	AM/SOP-3
Alpha Spectrometers		Background	Biweekly	Control Charted	Root Cause Analysis	Instrument Administrator	NC/SOP-8
Alpha Spectrometers		Eff. Check	Weekly	Control Charted FWHM – 30% above & below the mean Efficiency – control chart limits	Root Cause Analysis	Instrument Administrator	NC/SOP-8

ED_006395_00002031-00047

QAPP Worksheet #26 & 27: Sample Handling, Custody, and Disposal

Sampling Organization: Weston Solutions, Inc., START V / Precision Environmental, Inc., 36-15A 23rd Street, LIC, NY 11106
Laboratory: Radon/RTCA; Soil and Aqueous/NAREL
Method of sample delivery (shipper/carrier): Hand Delivered or FedEx
Number of days from reporting until sample disposal: 60 days

Activity	Organization and Title or Position of Person Responsible for the Activity	SOP Reference[1]
Sample Labeling	START V Site Project Manager, START V Sampling Team	EPA-540-R-014-013, October 2014
Chain-of-Custody Form Completion	START V Site Project Manager, START V Sampling Team	EPA-540-R-014-013, October 2014
Sample Packaging	START V Site Project Manager, START V Sampling Team	EPA-540-R-014-013, October 2014
Shipping Coordination	START V Site Project Manager, START V Sampling Team	EPA-540-R-014-013, October 2014
Sample Receipt, Inspection, & Log-in	Laboratory Sample Custodian	EPA-540-R-014-013, October 2014, NAREL
Sample Custody and Storage	Laboratory Sample Custodian /Laboratory Analytical Personnel	EPA-540-R-014-013, October 2014, RTCA and NAREL
Sample Disposal	Field Personnel/Laboratory Sample Custodian /Laboratory Analytical Personnel	EPA-540-R-014-013, October 2014, RTCA and NAREL

Sample Identification Procedures: Each sample collected by START V will be designated by a code that will identify the sample in accordance with previous sampling (if applicable). For radon and soil samples, an alpha-numeric code that identifies the site-specific property number will begin the sample nomenclature, followed by combined media type and location, followed by sample date for radon sample and sample depth for soil sample. After the date/depth, the sequential sample numbers will be listed. Duplicate samples will be identified in the same manner as other samples and will be distinguished and documented in the field logbook.

Example Radon Sample: C008-RC01-190909-01 = Property (C008), Radon canister location 01 (RC01), Collection Date 9/9/2019, Sample number 01, Co-located Sample (Field Duplicate) will be 02.

Example Soil Sample: C008-SB01-0204-01 = Property (C008), Soil boring location 01 (SB01), Soil sample collected from depths 2 inches to 4 inches bgs (0204), Sample number 01, Field Duplicate will be 02.
NOTE: This nomenclature is subject to change at the discretion of the OSC.

QAPP Worksheet #26 & 27: Sample Handling, Custody, and Disposal (Concluded)

Field Sample Custody Procedures (sample collection, packaging, shipment, and delivery to laboratory): Each sample will be individually identified and labeled after collection, then sealed with custody seals and enclosed in a plastic cooler. The sample information will be COC forms, and the samples shipped to the appropriate laboratory via overnight delivery service or courier. Chain-of-custody records must be prepared in Scribe to accompany samples from the time of collection and throughout the shipping process. Each individual in possession of the samples must sign and date the sample COC Record. The chain-of-custody record will be considered completed upon receipt at the laboratory. A traffic report and chain-of-custody record will be maintained from the time the sample is taken to its final deposition. Every transfer of custody must be noted and signed for, and a copy of this record kept by each individual who has signed. When samples are not under direct control of the individual responsible for them, they must be stored in a locked container sealed with a custody seal. Specific information regarding custody of the samples projected to be collected on the weekend will be noted in the field logbook. The chain-of-custody record should include (at minimum) the following: 1) Sample identification number; 2) Sample information; 3) Sample location; 4) Sample date; 5) Sample Time; 6) Sample Type Matrix; 7) Sample Container Type; 8) Sample Analysis Requested; 9) Name(s) and signature(s) of sampler(s); and 10) Signature(s) of any individual(s) with custody of samples.

A separate chain-of-custody form must accompany each cooler for each daily shipment. The chain-of-custody form must address all samples in that cooler, but not address samples in any other cooler. This practice maintains the chain-of-custody for all samples in case of mis-shipment.

Laboratory Sample Custody Procedures (receipt of samples, archiving, and disposal Within the laboratory, the person responsible for sample receipt must sign and date the chain-of-custody form; verify that custody seals are intact on shipping containers; compare samples received against those listed on the chain-of-custody form; examine all samples for possible shipping damage and improper sample preservation; note on the chain-of-custody record that specific samples were damaged; notify sampling personnel as soon as possible so that appropriate samples may be regenerated; verify that sample holding times have not been exceeded; maintain laboratory chain-of-custody documentation; and place the samples in the appropriate laboratory storage. At this time, no samples will be archived at the laboratory. Disposal of the samples will occur only after analyses and QA/QC checks are completed.

[1]Note: Refer to Contract Laboratory Program Guidance for Field Samplers, EPA-540-R-014-013, October 2014 at: https://www.epa.gov/sites/production/files/2015-03/documents/samplers_guide.pdf

ED_006395_00002031-00049

QAPP Worksheet #28: QC Samples Table
QAPP Worksheet #28A – Radon

Matrix	Air
Analytical Group	Radon
Concentration Level	Low
Sampling SOP(s)	2001
Analytical Method/SOP Reference	ANSI/AARST/MAMF 2012 / EPA Method 402-92-R-004
Sampler's Name	Bernard Nwosu
Field Sampling Organization	Weston Solutions, Inc. START V/ Precision Environmental, Inc.
Analytical Organization	RTCA
No. of Sample Locations	15

Lab QC Sample:	Frequency/ Number	Method/SOP QC Acceptance Limits	Corrective Action	Person(s) Responsible for Corrective Action	Data Quality Indicator (DQI)	Measurement Performance Criteria
Lab Duplicate	10% of the sample	EPA Method 402-R-92-004	Identify problem and correct	Laboratory technician	Precision	Relative Percent Difference (RPD) of +28% warning level and 30% control limit for duplicates of 4.0 pCi/L or greater. For duplicates of less than 4.0 pCi/L, the RPD warning level is 50% and the control limit is 67%.
Monthly Spike	6 per month	Laboratory SOP	Identify problem and correct	Laboratory technician	Precision	± 25%

QAPP Worksheet #28: QC Samples Table
QAPP Worksheet #28B – Isotopic Thorium

Matrix	Soil/Aqueous
Analytical Group	Isotopic Thorium
Concentration Level	Low/Medium
Sampling SOP(s)	ERT/SERAS SOP# 2001, 2006, 2012
Analytical Method/SOP Reference	Alpha Spectroscopy/NAREL ACT-02FTH
Sampler's Name	Bernard Nwosu
Field Sampling Organization	Weston Solutions, Inc., START V
Analytical Organization	NAREL
No. of Sample Locations	30

Lab QC Sample:	Frequency/ Number	Method/SOP QC Acceptance Limits	Corrective Action	Person(s) Responsible for Corrective Action	Data Quality Indicator (DQI)	Measurement Performance Criteria
Duplicate	1 per 20	|z-score| < 3	Reanalysis	Analyst	Precision	|z-score| < 3
Laboratory Control	1 per 20	|z-score| < 3	Reanalysis	Analyst	Accuracy	|z-score| < 3
Reagent Blank	1 per 20	0 ± 3 sigma	Reanalysis	Analyst	Precision	0 ± 3 sigma

QAPP Worksheet #28: QC Samples Table
QAPP Worksheet #28C – Isotopic Uranium

Matrix	Soil/Aqueous
Analytical Group	Isotopic Uranium
Concentration Level	Low/Medium
Sampling SOP(s)	ERT/SERAS SOP# 2001, 2006, 2012
Analytical Method/SOP Reference	Alpha Spectroscopy/NAREL ACT-02F-U
Sampler's Name	Bernard Nwosu
Field Sampling Organization	Weston Solutions, Inc., START V
Analytical Organization	NAREL
No. of Sample Locations	30

Lab QC Sample:	Frequency/ Number	Method/SOP QC Acceptance Limits	Corrective Action	Person(s) Responsible for Corrective Action	Data Quality Indicator (DQI)	Measurement Performance Criteria
Duplicate	1 per 20	|z-score| < 3	Reanalysis	Analyst	Precision	|z-score| < 3
Reagent Blank	1 per 20	0 ± 3 sigma	Reanalysis	Analyst	Accuracy	0 ± 3 sigma
Duplicate	1 per 20	|z-score| < 3	Reanalysis	Analyst	Precision	|z-score| < 3

QAPP Worksheet #28: QC Samples Table
QAPP Worksheet #28D – Gamma Spectroscopy

Matrix	Soil/Aqueous
Analytical Group	Gamma Spectroscopy
Concentration Level	Low/Medium
Sampling SOP(s)	ERT/SERAS SOP# 2001, 2006, 2012
Analytical Method/SOP Reference	Gamma Spectroscopy/NAREL GM-01-RA
Sampler's Name	Bernard Nwosu
Field Sampling Organization	Weston Solutions, Inc., START V
Analytical Organization	NAREL
No. of Sample Locations	30

Lab QC Sample:	Frequency/ Number	Method/SOP QC Acceptance Limits	Corrective Action	Person(s) Responsible for Corrective Action	Data Quality Indicator (DQI)	Measurement Performance Criteria
Duplicate	1 per 20	|z-score| < 3	Reanalysis	Analyst	Precision	|z-score| < 3
Laboratory Control	1 per 20	|z-score| < 3	Reanalysis	Analyst	Accuracy	|z-score| < 3
Reagent Blank	1 per 20	0 ± 3 sigma	Reanalysis	Analyst	Precision	0 ± 3 sigma

QAPP Worksheet #29: Project Documents and Records

Sample Collection and Field Records			
Record	**Generation**	**Verification**	**Storage Location/Archival**
Field Logbook or Data Collection Sheets	SPM/Field Personnel	Group Leader or Operations Manager	Project File
Chain-of-Custody Forms	SPM/Field Personnel	Group Leader or Operations Manager	Project File
Custody Seals	SPM/Field Personnel	Group Leader or Operations Manager	Project File
Air Bills	SPM/Field Personnel	Group Leader or Operations Manager	Project File
Daily QC Reports	SPM	Group Leader or Operations Manager	Project File
Deviations	SPM/Field Scientist	Group Leader or Operations Manager	Project File
Corrective Action Reports	Delegated QA Manager	Operations Manager or Program Manager or designee	Project File
Correspondence	SPM	Delegated QA Manager	Project File
Field Sample Results/Measurements	SPM/Field Scientist	Delegated QA Manager	Project File
Tailgate Safety Meeting Items	SPM/Field Safety Officer	Delegated QA Manager	Project File

Project Assessments			
Record	**Generation**	**Verification**	**Storage Location/Archival**
Data Verification Checklists	Data validator/Chemist QA/QC Specialist	Group Leader or Operations Manager	Project File
Data Validation Report	Data validator/Chemist QA/QC Specialist	Group Leader or Operations Manager	Project File
Data Usability Assessment Report	Site Project Manager	Group Leader or Operations Manager	Project File
Corrective Action Reports	Group Leader/HSO/Chemist QA/QC Specialist	Group Leader	Project File
Correspondence	Group Leader/HSO/Chemist QA/QC Specialist	Program Manager or designee	Project File

ED_006395_00002031-00054

QAPP Worksheet #29: Project Documents and Records (Concluded)

Laboratory Records			
Record	**Generation**	**Verification**	**Storage Location/Archival**
Sample Receipt, Custody, and Checklist	Laboratory Sample Receiving	Laboratory PM/Delegated QA Manager	Laboratory Data Package and Project File
Equipment Calibration Logs	Laboratory Technician	Laboratory PM/Delegated QA Manager	Laboratory Data Package and Project File
Standard Traceability Logs	Laboratory Technician	Laboratory PM/Delegated QA Manager	Laboratory Data Package and Project File
Sample Prep Logs	Laboratory Technician	Laboratory PM/Delegated QA Manager	Laboratory Data Package and Project File
Run Logs	Laboratory Technician	Laboratory PM/Delegated QA Manager	Laboratory Data Package and Project File
Equipment Maintenance, Testing, and Inspection Logs	Laboratory Technician/ Laboratory QA Manager	Laboratory PM/Delegated QA Manager	Laboratory File
Corrective Action Reports	Laboratory QA Manager	Laboratory PM/Delegated QA Manager	Laboratory File and Project File
Laboratory Analytical Results	Laboratory Technician/ Laboratory QA Manager	Laboratory PM/Delegated QA Manager	Laboratory Data Package and Project File
Laboratory QC Samples, Standards, and Checks	Laboratory Technician/ Laboratory QA Manager	Laboratory PM/Delegated QA Manager	Laboratory Data Package and Project File
Instrument Results (raw data) for Primary Samples, Standards, QC Checks, and QC Samples	Laboratory Technician/ Laboratory QA Manager	Laboratory PM/Delegated QA Manager	Laboratory Data Package and Project File
Sample Disposal Records	Laboratory Technician	Laboratory PM/Delegated QA Manager	Laboratory File

Laboratory Data Deliverables[1]						
Record	**VOCs**	**SVOCs**	**PCBs**	**Pesticides**	**Metals**	**Other[2]**
Narrative	NA	NA	NA	NA	NA	Y
Chain of Custody	NA	NA	NA	NA	NA	Y
Summary Results	NA	NA	NA	NA	NA	Y
QC Results	NA	NA	NA	NA	NA	Y
Chromatograms or raw data	NA	NA	NA	NA	NA	Y
Tentatively Identified Compounds	NA	NA	NA	NA	NA	Y

[1] The blank Laboratory Data Deliverables table is designed to be a checklist for use in supporting data completeness. The records and analytical groups in this table are not all inclusive of those that may be used on a specific project and should be modified and utilized by the Delegated SPM as applicable
[2] Isotopic Thorium/Alpha Spectroscopy, Isotopic Uranium/Alpha Spectroscopy, and Gamma Spectroscopy and Radon Testing.

QAPP Worksheet #31, 32 & 33: Assessments and Corrective Action

Assessment Type	Responsible Party & Organization	Number/Frequency	Estimated Dates	Assessment Deliverable	Deliverable Due Date
Field Sampling Technical Systems Audit (TSA)[1]	Chemist QA/QC Specialist (or designee) and Group Leader or Operations Manager WESTON	As needed, as determined by WESTON Chemist QA/QC Specialist (or designee) and Group Leader or Program Manager WESTON	To be completed near the beginning of field sample collection activities/9/8/2019	TSA Memorandum and Checklist	48 to 72 hours following assessment
Laboratory TSA[2]	Laboratory QA Manager Regulatory Agency	CLP, NAREL, and certified subcontract laboratories are routinely audited by accrediting authorities.	Every Year	Written Report	14 Days
Project-Specific PT/PE Samples	Chemist QA/QC Specialist (or designee) WESTON	Varies; as determined by WESTON Chemist QA/QC Specialist (or designee)	Not Required	PT/PE Deficiency Report (memo/e-mail to file)	Not Required
Data Validation	Chemist QA/QC Specialist or CHP/Data Validator WESTON	Each data package for which data validation was requested; varies by site	Within 42 days from the sampling date	Data Validation Report	Varies by site
Management Review	Group Leader and/or Operations Manager WESTON	Varies; as determined by WESTON Program Manager	Varies; as determined by WESTON Program Manager	Quality Management Report (memo/e-mail to file)	1-2 weeks following assessment

[1] Field sampling TSAs may include, but are not limited to the following: sample collection records; sample handling, preservation, packaging, shipping, and custody records; equipment operation, maintenance, and calibration records.

[2] Laboratory TSAs may include, but are not limited to the following: sample log-in, identification, storage, tracking, and custody procedures; sample and standards preparation procedures; availability of analytical instruments; analytical instrument operation, maintenance, and calibration records; laboratory security procedures; qualifications of analysts; case file organization and data handling procedures.

ED_006395_00002031-00056

Worksheet 31, 32 & 33 — Assessments and Corrective Action (Concluded)

Assessment Type	Responsibility for Responding to Assessment Findings	Assessment Response Documentation	Timeframe for Response	Responsibility for Implementing Corrective Action	Responsible for Monitoring Corrective Action Implementation
Field Sampling Technical Systems Audit (TSA)[1]	SPM, WESTON	Findings of field audit.	24 hours of receipt of audit report	Operations Manager, WESTON	SPM or Operations Manager, WESTON
Laboratory TSA[2]	RTCA QA Manager, To be determined NAREL QA Manager, Tonya Hudson Chemist QA/QC Specialist (or designee), WESTON	Written response to Weston Chemist QA/QC Specialist EPA Region 2 to address deficiencies	1 week of receipt of request from EPA Region 2 (or START V on behalf of EPA)	Laboratory Manager, RTCA Laboratory Manager, NAREL	Quality Manager (or designee) and/or Chemist, WESTON
Project-Specific PT/PE Samples	No Applicable	No Applicable	No Applicable	No Applicable	No Applicable
Data Validation	Non-CLP data: Chemist QA/QC Specialist (or designee), WESTON	Validation Report	Within 48 hours of receipt of validation inquiry	Laboratory QA Manager and/or Chemist	Chemist, WESTON
Management Review	Program Manager, WESTON	Quality Management Response	48 hours of receipt of Quality Management report	Program Manager, WESTON	Chemist QA/QC Specialist (or designee) and Program Manager, WESTON

[1] Field sampling TSAs may include, but are not limited to the following: sample collection records; sample handling, preservation, packaging, shipping, and custody records; equipment operation, maintenance, and calibration records.

[2] Laboratory TSAs may include, but are not limited to the following: sample log-in, identification, storage, tracking, and custody procedures; sample and standards preparation procedures; availability of analytical instruments; analytical instrument operation, maintenance, and calibration records; laboratory security procedures; qualifications of analysts; case file organization and data handling procedures.

ED_006395_00002031-00057

QAPP Worksheet #34: Data Verification and Validation Inputs

Item	Description	Verification (completeness)	Validation (conformance to specifications)
Planning Documents/Records			
1	Approved QAPP	X	
2	Contract	X	
3	Field SOPs	X	
4	Laboratory SOPs	X	
5	Laboratory QA Manual	X	
6	Laboratory Certifications	X	
Field Records			
7	Field Logbooks	X	X
8	Equipment Calibration Records	X	X
9	Chain of Custody Forms	X	X
10	Sampling Diagrams/Surveys	X	X
11	Drilling Logs	X	X
12	Geophysics Reports	X	X
13	Relevant Correspondence	X	X
14	Change Orders/Deviations	X	X
15	Field Audit Reports	X	X
16	Field Corrective Action Reports	X	X
17	Sample Location Verification (Worksheet 18)	X	X
Analytical Data Package and Other Laboratory Deliverables			
18	Cover Sheet (laboratory identifying information)	X	X
19	Case Narrative	X	X
20	Internal Laboratory Chain of Custody	X	X
21	Sample Receipt Records	X	X
22	Sample Chronology (i.e. dates and times of receipt, preparation, & analysis)	X	X
23	Communication Records	X	X
24	Project-specific PT Sample Results	NA	NA
25	RL/MDL Establishment and Verification	X	X
26	Standards Traceability	NA	NA
27	Instrument Calibration Records	X	X
28	Definition of Laboratory Qualifiers	X	X
29	Results Reporting Forms	X	X
30	QC Sample Results	X	X
31	Corrective Action Reports	X	X
32	Raw Data	X	X
33	Electronic Data Deliverable	X	X

ED_006395_00002031-00058

QAPP Worksheet #35: Data Verification Procedures

Records Reviewed	Required Documents	Process Description	Responsible Person, Organization
Site-specific QAPP	Contract QAPP, Work Scope in TD	Verify sampling and analytical methods specified in site-specific QAPP are correct and all contract QAPP protocols are followed and required QC samples will be collected in the correct bottles and properly preserved.	Bernard Nwosu WESTON Operations Manager Smita Sumbaly, WESTON Chemist QA/QC Specialist
Field Logs and SOPs	Contract and site-specific QAPP, SOPs	Ensure that all field sampling SOPs specified in site-specific QAPP were followed.	WESTON SPM and Data Validation Personnel
Analytical SOPs	Analytical Method and Contract QAPP	Ensure that laboratory analytical SOPs comply with the published method.	Laboratory QA Manager: RTCA, TBD Laboratory QA Manager: Tonya Hudson WESTON Chemist QA/QC Specialist /Smita Sumbaly
Laboratory QA Manual	EPA Guidance Documents	Verify that best practices specified in EPA Guidance Documents are incorporated into the Laboratory QA Manual.	Laboratory QA Manager: RTCA, TBD Laboratory QA Manager: Tonya Hudson
Laboratory Certifications	Generic and site-specific QAPP	Ensure that laboratory performing analytical sample analyses has current State, National Environmental Laboratory Accreditation Program, National Voluntary Laboratory Accreditation Program, or American Industrial Hygiene Association certifications as required by the project.	Laboratory QA Manager: RTCA, TBD Laboratory QA Manager: Tonya Hudson
Laboratory Deliverables	Chain of Custody	Chain-of-custody forms will be verified against the sample cooler they represent. Sample Acceptance Checklist is completed. The Precision Environmental, Inc. and Radon Testing Corporation of America staff supervisor utilizes the analyses request information and the external COC to review the accuracy and completeness of LIMS log-in entries, as reflected on the LIMS Sample Receipt Form Details can be found in Laboratory Quality Management Plan, SOP G-25	Laboratory QA Manager: RTCA, TBD Laboratory QA Manager: Tonya Hudson EPA RSCC/SMO coordinator

ED_006395_00002031-00059

QAPP Worksheet #35: Data Verification Procedures (Concluded)

Records Reviewed	Required Documents	Process Description	Responsible Person, Organization
Laboratory Deliverables	Chain of Custody	Chain-of-custody forms will be verified against the sample cooler they represent. Sample Acceptance Checklist is completed. The non-CLP labs, sample custodian utilizes the analyses request information and the external COC to review the accuracy and completeness of LIMS log-in entries, as reflected on the LIMS Sample Receipt Form Details can be found in Laboratory Quality Management Plan.	Laboratory sample custodian , Laboratory QA Manager: RTCA, TBD Laboratory QA Manager: Tonya Hudson
Laboratory QA Manual	Analytical data package/ Final Report	The procedures for data review : 1- Data reduction/review by Primary Analyst. 2- Review complete data package (raw data) by independent Peer Reviewer 3- The Branch Chief/Section Chief reviews the project documentation for completeness followed by a QA review by the QAO 4- Final review by Branch Chief/Section Chief prior to release, this review is to ensure completeness and general compliance with the objectives of the project. This final review typically does not include a review of raw data. Details can be found in Laboratory Quality Management Plan and SOP G-26.	Primary Analyst, Peer Reviewer, Sample Project Coordinator, Quality Assurance Officer, Section Chief/ Branch Chief. RTCA– START V-procured laboratory NAREL – EPA laboratory
Field Logbook, Field Sheets, Sample Diagrams/ Surveys	site-specific QAPP	Verify that records are present and complete for each day of field activities. Verify that all planned samples including field QC samples were collected and that sample collection locations are documented. Verify that meteorological data were provided for each day of field activities. Verify that changes/exceptions are documented and were reported in accordance with requirements. Verify that any required field monitoring was performed and results are documented.	WESTON SPM and Operations Manager
Field Equipment Calibration Records	site-specific QAPP, SOPs, field logbook	Ensure that all field analytical instrumentation SOPs for equipment calibration were followed.	WESTON SPM and Operations Manager
Relevant reports and correspondence	site-specific QAPP	Verify that reports are present and complete for each day of field activities. Verify that correspondence is documented and was reported in accordance with requirements.	WESTON SPM and Operations Manager
Audit Reports, Corrective Action Reports	site-specific QAPP	Verify that all planned audits were conducted. Examine audit reports. For any deficiencies noted, verify that corrective action was implemented according to plan.	Smita Sumbaly, WESTON Chemist QA/QC Specialist Laboratory PM, RTCA Laboratory PM, NAREL

QAPP Worksheet #36: Data Validation Procedures

The following information is project-specific and will be identified in the site-specific or QAPP.

Data Validator: Weston, START V Data validator

Analytical Group/ Method	Data Deliverable Requirements	Analytical Specifications	MPC	Percent of Data Packages to be Validated	Percent of Raw Data Reviewed	Percent of Results to be Recalculated	Validation Procedure	Validation Code	Electronic Validation Program/ Version
RTCA									
Radon	SEDD Stage IIa/IIb	EPA Method 402-R-92-004 ANSI/AAST/ MAMF 2012	Worksheets 12, 24, 28	100%	100%	100%	Sampling Method, Lab SOP, Calculations, QC Criteria	Validated Manually (VM)	Excel spreadsheet
NAREL									
Soil/Aqueous	SEDD Stage IIa/IIb	NAREL ACT-02F-TH	Worksheets 12, 24, 28	100%	100%	100%	Sampling Method, Lab SOP, Calculations, QC Criteria	Validated Manually (VM)	Excel spreadsheet
Soil/Aqueous	SEDD Stage IIa/IIb	NAREL ACT-02F-U	Worksheets 12, 24, 28	100%	100%	100%	Sampling Method, Lab SOP, Calculations, QC Criteria	Validated Manually (VM)	Excel spreadsheet
Soil/Aqueous	SEDD Stage IIa/IIb	NAREL GAM-01-RA	Worksheets 12, 24, 28	100%	100%	100%	Sampling Method, Lab SOP, Calculations, QC Criteria	Validated Manually (VM)	Excel spreadsheet

QAPP Worksheet #37: Usability Assessment

Data usability assessments (DUA) will be performed as directed by EPA. This worksheet documents procedures that will be used to perform the DUA. The DUA is performed at the conclusion of data collection activities using the outputs from data verification and data validation (i.e., data of known and documented quality). It is the data interpretation phase, which involves a qualitative and quantitative evaluation of environmental data to determine whether the Site data are of the right type, quality, and quantity to support the decisions that need to be made. It involves a retrospective evaluation of the systematic planning process, and involves participation by key members of the project team. The DUA evaluates whether underlying assumptions used during systematic planning are supported, sources of uncertainty have been accounted for and are acceptable, data are representative of the population of interest, and the results can be used as intended, with the acceptable level of confidence.

Data, whether generated in the field or by the laboratory, are tabulated and reviewed for PARCCS by the SPM for field data or the data validator for laboratory data. The review of the PARCC Data Quality Indicators (DQI) will compare with the Data Quality Objectives (DQO) detailed in the site-specific QAPP, the analytical methods used and impact of any qualitative and quantitative trends will be examined to determine if bias exists. A hard copy of field data is maintained in a designated field or site logbook. Laboratory data packages are validated, and final data reports are generated. All documents and logbooks are assigned unique and specific control numbers to allow tracking and management.

Where applicable, the following documents will be followed to evaluate data for fitness in decision making: EPA QA/G-4, Guidance on Systematic Planning using the Data Quality Objectives Process, EPA/240/B-06/001, February 2006, and EPA QA/G-9R, Guidance for Data Quality Assessment, A reviewer's Guide EPA/240/B-06/002, February 2006.

Personnel (organization and position/title) responsible for participating in the data usability assessment may include, but not be limited to:

- START V Operations Manager;
- START V Quality Manager (or designee);
- START V Risk Assessor;
- START V SPM;
- START V Chemist QA/QC Specialist;
- START V Statistician.

Based on project-specific oversight responsibilities and analytical scopes, this DUA worksheet outlines the approach that will be taken as the analytical scope expands on a project-specific basis.

The following general steps will be followed to assure that the data usability assessment evaluates whether underlying assumptions used during systematic planning are supported, sources of uncertainty have been accounted for and are acceptable, data are representative of the population of interest, and the results can be used as intended, with the acceptable level of confidence:

QAPP Worksheet #37: Usability Assessment (Concluded)

Step 1 – Review the project's objectives and sampling design: This includes reviewing the DQOs and MPC to make sure they are still applicable. The sampling design will be consistent with stated DQOs.

Step 2 – Review the data verification and data validation outputs: Graphs, maps, and tables can be prepared to summarize the data. Deviations from activities planned in the Project QAPP should be considered, including samples not collected (potential data gaps), holding time exceedances, damaged samples, impact of non-compliant PE sample results, and SOP deviations. The implications of unacceptable QC sample results will be assessed.

Step 3 – Verify the assumptions of the selected statistical method: The underlying assumptions for the selected statistical methods (if specified in the QAPP) will be verified for validity. Common assumptions include the distributional form of the data, independence of the data, dispersion characteristics, homogeneity, etc. Depending on the robustness of the statistical method, minor deviations from assumptions usually are not critical to statistical analysis and data interpretation. If serious deviations from assumptions are discovered, then another statistical method may be selected.

Step 4 - Implement the statistical method: If specified in the site-specific QAPP, statistical procedures will be implemented for analyzing the data and reviewing underlying assumptions. For a decision project that involves hypothesis testing (e.g., "concentrations of lead in groundwater are below the action level") the consequences of selecting the incorrect alternative will be considered; for estimation projects (e.g., establishing a boundary for surface soil contamination), the tolerance for uncertainty in measurements will be considered.

Step 5 – Document data usability and draw conclusions:

The DUA considered the final step in the data evaluation process. All data will be assessed for usability regardless of data evaluation/validation process implementation. Data usability goes beyond validation in that it evaluates the achievement of the DQOs based on the comparison of the project DQIs and site-specific QAPP with the obtained results. The results of the DUA, and particularly any changes to the DQOs necessitated by the data not meeting usability criteria, will be communicated in accordance with Worksheet 6.

The usability of the data as intended will be determined. Achievable DQOs, based on comparison with the Site DQIs, will be discussed. The performance of the sampling design will be assessed and limitations of the data use identified. The conceptual site model will be updated and conclusions documented. A DUA report (in the form of text/or table) will be prepared or a data usability summary will be included in the final report.

ED_006395_00002031-00063

ATTACHMENT A

Figure 1: Site Location Map
Figure 2: Proposed Soil Boring Location Map

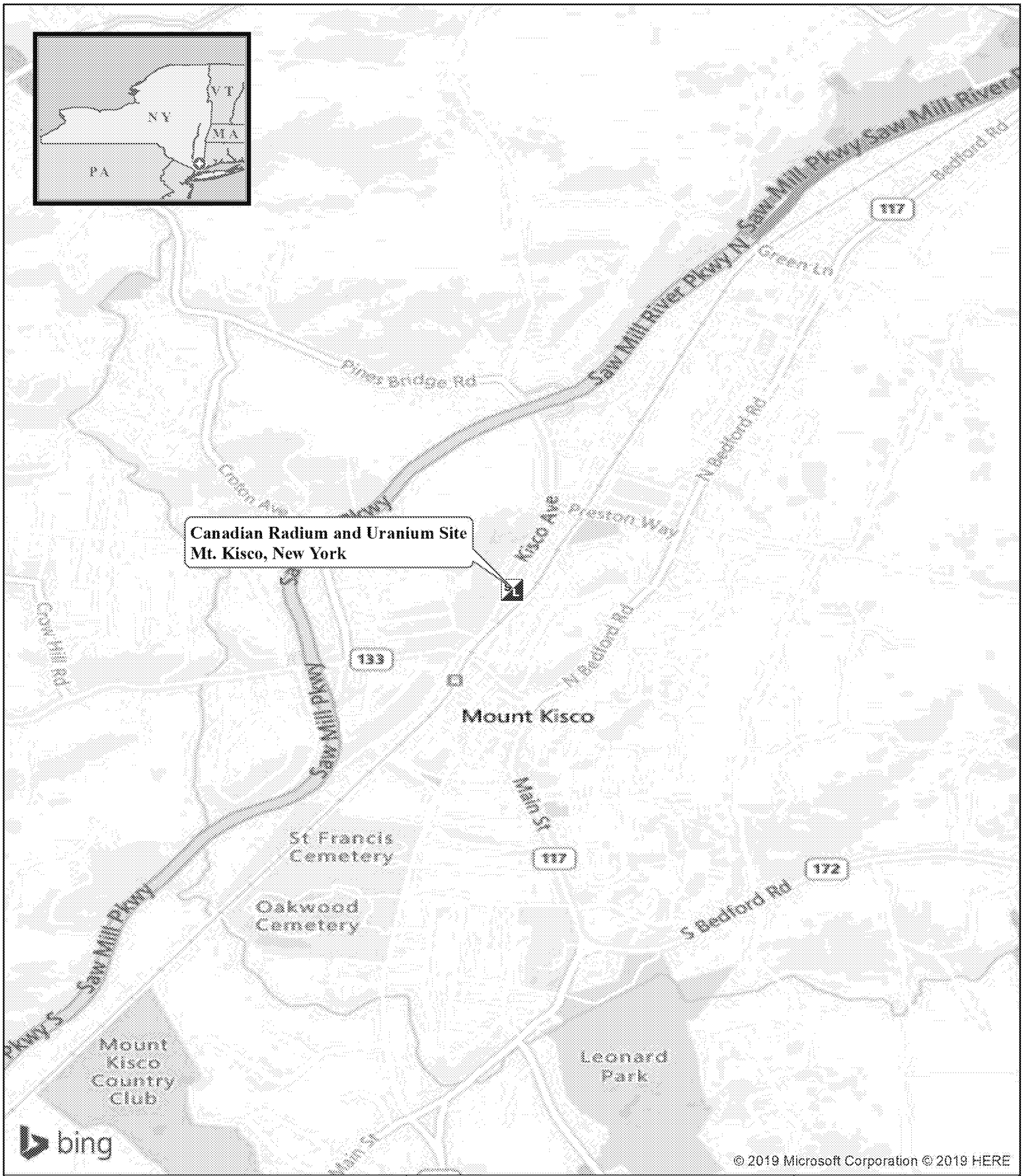

Legend

Site Location

N

0 0.125 0.25 0.5 0.75 1 Miles

Weston Solutions, Inc.
Federal East Division

In Association With
Eco-Risk; Avatar Environmental, LLC;
Pro-West & Associates, Inc.;
On-Site Environmental, Inc.;
and Sovereign Consulting, Inc.

Figure 1:
Site Location Map

Canadian Radium and Uranium Site
Mt. Kisco, New York

U.S. ENVIRONMENTAL PROTECTION AGENCY
SUPERFUND TECHNICAL ASSESSMENT
& RESPONSE TEAM V
CONTRACT # 68HE0319D0004

GIS ANALYST:	T. BENTON
EPA OSC:	D. GAUGHAN
START V SPM:	B. NWOSU
CHARGE #::	40200.011.032.1030

DATE MODIFIED: 8/13/2019

W:\START_V\00320030\MXD\190813_CRU_SITELOCATIONMAP.MXD

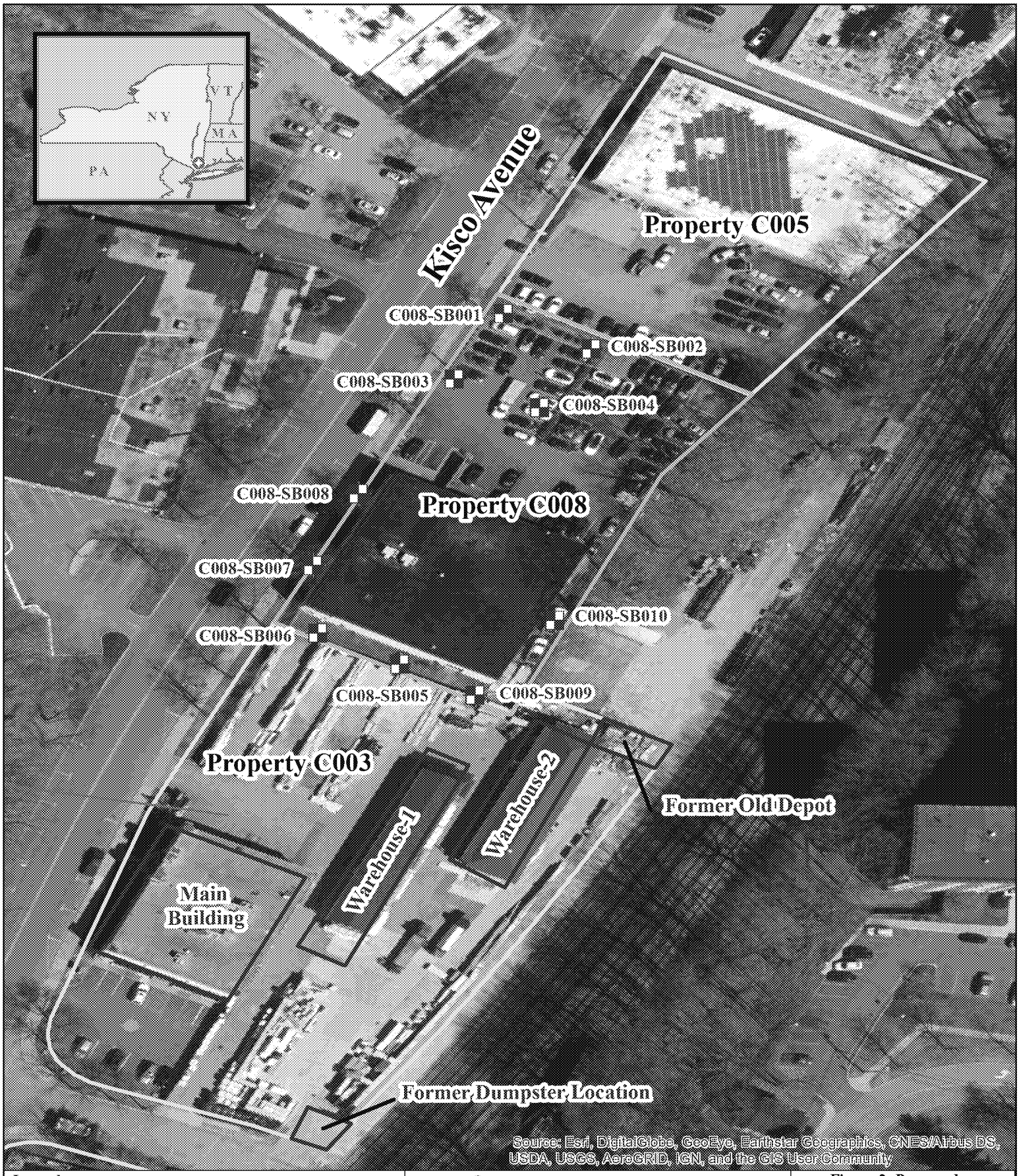

Legend

- Proposed Soil Boring Location
- Site Features
- Property Boundary
- Area of Concern

N

0 20 40 80 120 160 Feet

Weston Solutions, Inc.
Federal East Division

In Association With
Eco-Risk; Avatar Environmental, LLC;
Pro-West & Associates, Inc.;
On-Site Environmental, Inc.;
and Sovereign Consulting, Inc.

Figure 2: Proposed Soil Boring Location Map

Canadian Radium and Uranium Site
Mt. Kisco, New York

U.S. ENVIRONMENTAL PROTECTION AGENCY
SUPERFUND TECHNICAL ASSESSMENT
& RESPONSE TEAM V
CONTRACT # 68HE0319D0004

GIS ANALYST:	T. BENTON
EPA OSC:	D. GAUGHAN
START V SPM:	B. NWOSU
CHARGE #::	40200.011.032.1030

DATE MODIFIED: 8/13/2019

W:\START_V\00320030\MXD\190813_CRU_SEP2019PROPOSEDSLM.MXD

ATTACHMENT B

Sampling SOPs

ERT/SERAS SOP # 2001 – *General Field Sampling Guidelines*
ERT/SERAS SOP # 2006 – *Sample Equipment Decontamination*
ERT/SERAS SOP # 2012 – *Soil Sampling*
ERT/SERAS SOP # 2050 – *Geoprobe Operation*
Protocol for Conducting Radon and Radon Decay Product Measurements in Multifamily Buildings (MAMF 2012)

GENERAL FIELD SAMPLING GUIDELINES

CONTENTS

1.0 OBJECTIVE

2.0 APPLICABILITY

3.0 DESCRIPTION

- 3.1 Planning Stage
- 3.2 Sampling Design
  - 3.2.1 Judgmental Sampling
  - 3.2.2 Systematic Sampling
  - 3.2.3 Simple and Stratified Random Sampling
- 3.3 Sampling Techniques
  - 3.3.1 Sample Collection Techniques
  - 3.3.2 Homogenization
  - 3.3.3 Filtration
- 3.4 Quality Assurance/Quality Control (QA/QC) Samples
- 3.5 Sample Containers, Preservation, Storage and Holding Times
- 3.6 Documentation

4.0 RESPONSIBILITIES

- 4.1 SERAS Task Leaders
- 4.2 SERAS Field Personnel
- 4.3 SERAS Program Manager
- 4.4 SERAS QA/QC Officer
- 4.5 SERAS Health and Safety Officer

Complete Rewrite: SOP #2001; Revision 1.0; 03/15/13; U.S. EPA Contract EP-W-09-031

SUPERCEDES: SOP #2001; Revision 0.0; 08/11/94; U.S. EPA Contract 68-C4-0022

1.0 OBJECTIVE

The objective of this standard operating procedure (SOP) is to describe the general field sampling techniques and guidelines that will assist the Scientific Engineering Response and Analytical Services (SERAS) personnel in planning, choosing sampling strategies and sampling locations, and frequency of Quality Control (QC) samples for proper assessment of site characteristics. The ultimate goal is to ensure data quality during field collection activities.

2.0 APPLICABILITY

This SOP applies to the collection of aqueous and non-aqueous samples for subsequent laboratory analysis to determine the presence, type, and extent of contamination at a site.

3.0 DESCRIPTION

Representative sampling ensures that a sample or a group of samples accurately reflect the concentration of the contaminant at a given time and location. Depending on the contaminant of concern and matrix, several variables may affect the representativeness of the samples and subsequent measurements. Environmental variability due to non-uniform distribution of the pollutant due to topographic, meteorological and hydrogeological factors, changes in species, and dispersion of contaminants and flow rates contribute to uncertainties in sampling design.

Determining the sampling approach depends on what is known about the site from prior sampling (if any) and the site history, variation of the contaminant concentrations throughout a site, potential migration pathways, and human and environmental receptors. The objectives of an investigation determine the appropriate sampling design.

The frequency of sampling and the specific sample locations that are required must be defined in the site-specific Quality Assurance Project Plan (QAPP).

3.1 Planning Stage

The objectives of an investigation are established and documented in the site-specific QAPP. The technical approach including the media/matrix to be sampled, sampling equipment to be used, sampling design and rationale, and SOPs or descriptions of the procedure to be implemented are included in the QAPP. Refer to the matrix-specific SOPs for sampling techniques which include the equipment required for sampling.

During the planning stage, the data quality objectives (DQOs) will be determined. In turn, the project's DQOs will determine the need for screening data or definitive data. Screening data supports an intermediate or preliminary decision but eventually is supported by definitive data before the project is complete (i.e., placement of monitor wells, estimation of extent of contamination). Definitive data is suitable for final decision making, has defined precision and accuracy requirements and is legally defensible (i.e., risk assessments, site closures).

3.2. Sampling Design

Representative sampling approaches include judgmental, random, systematic grid, systematic simple random, stratified random and transect sampling. Sampling designs may be applied to soil,

sediment and water; however, the random and systematic random approaches are not practical for sampling water systems, especially flowing water systems.

3.2.1 Judgmental Sampling

Judgmental sampling is the subjective selection of sampling locations based on the professional judgment of the field team. This method is useful to locate and to identify potential sources of contamination. It may not be representative of the full site and is used to document worst case scenarios. For example, groundwater sampling points are typically chosen based on professional judgment, whether permanently installed wells or temporary well points.

3.2.2 Systematic Sampling

Systematic grid sampling involves the collection of samples at fixed intervals when the contamination is assumed to be randomly distributed. A random point is chosen as the origin for the placement of the grid. A grid is constructed over a site and samples are collected from the nodes (where the grid lines intersect). Depending on the number of samples that are required to be collected, the distance between the sampling locations can be adjusted. The representativeness of the sampling may be improved by shortening the distance between sample locations.

Systematic random sampling is used for estimating contaminant concentrations within grid cells. Instead of sampling at each node, a random location is chosen within each grid cell. The systematic grid and random sampling approaches are useful for delineating the extent of contamination, documenting the attainment of clean-up goals, and evaluating and determining treatment and disposal options.

Transect sampling involves one or more transect lines established across the site. Samples are collected at systematic intervals along the transect lines. The number of samples to be collected and the length of the transect line determines the spacing between the sampling points. This type of sampling design is useful for delineating the extent of contamination at a particular site, for documenting the attainment of clean-up goals, and for evaluating and determining treatment and disposal options.

3.2.3 Simple and Stratified Random Sampling

Statistical random sampling includes simple, stratified and systematic sampling. Simple random sampling is appropriate for estimating means and total concentrations, if the site or population does not contain a major trend or pattern of contamination. A statistician will generate the sampling locations based on sound statistical methods. Stratified random sampling is a useful tool for estimating average contaminant concentrations and total amounts of contaminants within specified strata and across the entire site. It is useful when a heterogeneous population or area can be broken down into regions with less variability within the boundaries of a stratum then between the strata. Additionally, strata can be defined based on the decisions that will be made. This type of sampling design uses historical information, known ecological and human receptors, soil type, fate and transport mechanism and other ecological factors to divide the sampling area into smaller regions or strata. Sampling locations are selected from each stratum using random sampling.

The simple random sampling approach is applied when there are many sample locations and the concentrations are assumed to be homogeneous across a site with respect to the parameter(s) that are going to be analyzed or monitored for. The stratified random sampling approach is useful for sampling drums, evaluating and determining treatment and disposal options, and locating and identifying sources of contamination.

3.3 Sampling Techniques

Sampling is the selection of a representative portion of a larger population or body. The primary objective of all sampling activities is to characterize a site accurately in a way that the impact on human health and the environment can be evaluated appropriately.

3.3.1 Sample Collection Techniques

Sample collection techniques may be either grab or composite. A grab sample is a discrete aliquot representative of a specific location at a given time and collected all at once from one location. The representativeness of such samples is defined by the nature of the materials that are sampled. Samples collected for volatile organic compounds (VOCs) are always grab samples and are never homogenized. Composite samples are non-discrete samples composed of more than one specific aliquot collected at selected sampling locations. Composite samples must be homogenized by mixing prior to putting the sample into containers. Composite samples can, in certain instances, be used as an alternative to analyzing a number of individual grab samples and calculating an average value. Incremental sampling conducted over a grid is a special case of composite sampling and is detailed in SOP #2019, *Incremental Soil Sampling*. Choice of collecting discrete or composite samples is based on project's DQOs.

3.3.2 Homogenization

Mixing of soil and sediment samples is critical to obtain a representative sample. An adequate volume/weight of sample is collected and placed in a stainless steel or Teflon® container, and is thoroughly mixed using a spatula or spoon made of an inert material. Once the sample is thoroughly mixed the sample is placed into sample containers specific for an analysis. Avoid the use of equipment made of plastic or polyvinyl chloride (PVC) when sampling for organic compounds when the reporting limit (RL) is in the parts per billion (ppb) or parts per trillion (ppt) ranges. Refer to SERAS SOP #2012, *Soil Sampling*, for more details on homogenization.

3.3.3 Filtration

In-line filters are used specifically for collecting groundwater samples for dissolved metals analysis and for filtering large volumes of turbid groundwater. Groundwater samples collected for VOCs are typically not filtered due to potential VOC losses. Filtering groundwater is performed to remove silt particulates from samples to prevent interference with the laboratory analysis. The filters used in groundwater sampling are either cartridge type filters inserted into a reusable housing, or are self-contained and disposable. Filter chambers are usually made of polypropylene housing an inert filtering material that removes particles larger than 0.45 micrometers (μm). Refer to SERAS SOP

#2007, *Groundwater Well Sampling* and SERAS SOP #2013, *Surface Water Sampling*, for more details on filtration techniques.

3.4 Quality Assurance /Quality Control Samples

QA/QC samples provide an evaluation of both the laboratory's and the field sampling team's performance. Including QA/QC samples in a sampling design allows for identifying and measuring sources of error potentially introduced from the time of sample container preparation through analysis. The most common QA/QC samples collected in the field are collocated field duplicates, field replicates, equipment blanks, field blanks and trip blanks. Extra volume/mass is collected for a matrix spike/matrix spike duplicate (MS/MSD) at a frequency of 5% (one in 20 samples). Spiking is performed in the laboratory. For additional information or other QA/QC samples pertinent to sample analysis, refer to SERAS SOP #2005, *Quality Assurance/Quality Control Samples*.

Collocated field duplicates may be collected based on site objectives and used to measure variability associated with the sampling process including sample heterogeneity, sampling methodology, and analytical procedures. Field replicates are field samples obtained from one location, homogenized, and divided into separate containers. This is useful for determining whether the sample has been homogenized properly. Equipment blanks (also known as rinsate blanks) are typically collected at a rate of one per day. The equipment blank is used to evaluate the relative cleanliness of non-dedicated equipment.

3.5 Sample Containers, Preservation, Storage and Holding Times

The amount of sample to be collected, the proper sample container type (i.e., glass, plastic), chemical preservation, and storage requirements are dependent on the matrix sampled and the analyses to be conducted. This information is provided in SERAS SOP #2003, *Sample Storage, Preservation, and Handling*. Field personnel need to be cognizant of any short holding times that warrant immediate shipment/transfer to the laboratory.

3.6 Documentation

Field conditions and site activities must be documented. Scribe will be used to document sample locations and generate chain of custody records. Other field measurements not typically entered into Scribe will be documented in a site-specific logbook or in a personal logbook. All sample documentation will be maintained in accordance with SERAS SOP #2002, *Sample Documentation* and SERAS SOP #4005, *Chain of Custody Procedures.*

4.0 RESPONSIBILITIES

4.1 SERAS Task Leaders

Task Leaders (TLs) are responsible for the overall management of the project. Task Leader responsibilities include ensuring that field personnel are well informed of the sampling requirements for a specific project and that SOP and QA/QC procedures stated in the site-specific QAPP are adhered to, issuing a Field Change Form that documents any changes to sampling activities after the QAPP has been approved and maintaining sample documentation.

4.2 SERAS Field Personnel

Field personnel are responsible for reading the QAPP prior to site activities and performing sample collection activities as written. They are responsible for notifying the TL of deviations from sample collection protocols which occurred during the execution of sampling activities. Field staff will collect samples and prepare documentation in accordance with SERAS SOP #2002, *Sample Documentation*. In addition, field personnel are responsible for reading and conforming to the approved site-specific Health and Safety Plan (HASP).

4.3 SERAS Program Manager

The SERAS Program Manager is responsible for the overall technical and financial management of the project.

4.4 SERAS QA/QC Officer

The QA/QC Officer is responsible for reviewing this SOP and ensuring that the information in this SOP is updated on a timely basis. Compliance to this SOP may be monitored by either conducting a field audit or reviewing deliverables prepared by the SERAS TL.

4.5 Health and Safety (H&S) Officer

The H&S Officer is responsible for ensuring that a HASP has been written in conformance with SOP # 3012, *SERAS Health and Safety Guidelines for Field Activities* and approved prior to field activities. Additionally, the H& S Officer is responsible for ensuring that SERAS site personnel's H&S training is current as per SOP # 3006, *SERAS Field Certification Program* and that their medical monitoring is current as per *SERAS SOP #3004, SERAS Medical Monitoring Program.*

STANDARD OPERATING PROCEDURE APPROVAL AND CHANGE FORM

Scientific, Engineering, Response and Analytical Services
2890 Woodbridge Avenue Building 209 Annex
Edison New Jersey 08837-3679

STANDARD OPERATING PROCEDURE

Title: Sampling Equipment Decontamination	
Approval Date: 12/28/2015	
Effective Date: 12/28/2015	SERAS SOP Number 2006, Rev 1.0

Authors

Name Christopher French
Title SERAS Environmental Technician
Signature Date 12/28/15

Name Christopher Gussman
Title SERAS Phytoremediation Scientist
Signature Date 12/28/15

Approvals

Name Richard Leuser
Title SERAS Deputy Program Manager
Signature Date 12/28/2015

Name Deborah Killeen
Title SERAS QA/QC Officer
Signature Date 12/23/15

Name Kevin Taylor
Title SERAS Program Manager
Signature Date 12/28/15

The top row of this table shows the most recent changes to the controlled document. For previous revision history information, archived versions of this document are maintained by the SERAS QA/QC Officer on the SERAS local area network (LAN).

History	Effective Date
Supersedes: SOP #2006, Revision 0.0, 08/11/94	12/28/15
Complete Rewrite - Updated all sections of the SOP	12/28/15

SAMPLING EQUIPMENT DECONTAMINATION

CONTENTS

1.0 SCOPE AND APPLICATION

2.0 METHOD SUMMARY

3.0 SAMPLE PRESERVATION, CONTAINERS, HANDLING, AND STORAGE

4.0 INTERFERENCES AND POTENTIAL PROBLEMS

5.0 EQUIPMENT/APPARATUS

- 5.1 Decontamination Tools/Supplies
- 5.2 Health and Safety Equipment
- 5.3 Waste Disposal

6.0 REAGENTS

7.0 PROCEDURES

- 7.1 Decontamination Methods
  - 7.1.1 Abrasive Cleaning Methods
  - 7.1.2 Non-Abrasive Cleaning Methods
- 7.2 Field Sampling Equipment Decontamination Procedures
  - 7.2.1 Decontamination Setup
  - 7.2.2 Decontamination Procedures
  - 7.2.3 Post Decontamination Procedures
- 7.3 Decontamination of Earth Moving Equipment/Drilling Equipment and accessories
  - 7.3.1 Decontamination Setup
  - 7.3.2 Decontamination Procedures
  - 7.3.3 Post Decontamination Procedures

8.0 CALCULATIONS

9.0 QUALITY ASSURANCE/QUALITY CONTROL

10.0 DATA VALIDATION

11.0 HEALTH AND SAFETY

UNCONTROLLED COPY

CONTENTS (cont'd)

12.0 REFERENCES

13.0 APPENDICES

A - Tables
B – Figures

SUPERSEDES: SOP #2006, Rev. 0.0, 08/11/94; US EPA Contract EP-W-09-031

UNCONTROLLED COPY

SAMPLING EQUIPMENT DECONTAMINATION

1.0 SCOPE AND APPLICATION

The purpose of this Standard Operating Procedure (SOP) is to describe the methods for preventing or limiting cross-contamination of samples due to inappropriate or inadequate equipment decontamination and to provide general guidelines for developing decontamination procedures for sampling equipment to be used during environmental investigations as per 29 Code of Federal Regulations (CFR) 1910.120. This SOP does not address personnel decontamination.

A Quality Assurance Project Plan (QAPP) in Uniform Federal Policy (UFP) format describing the project objectives must be prepared prior to deploying for a sampling event. The sampler needs to ensure the methods used are adequate to satisfy the data quality objectives.

The procedures in this SOP may be varied or changed as required, dependent on site conditions, equipment limitations or other procedural limitations. In all instances, the procedures employed must be documented on a Field Change Form and attached to the QAPP. These changes must be documented in the final deliverable.

2.0 METHOD SUMMARY

Removing or neutralizing contaminants from equipment minimizes the possibility of sample cross contamination, reduces or eliminates transfer of contaminants to clean areas, and prevents the mixing of incompatible substances. Some equipment may have specific decontamination procedures that do not follow this SOP. Refer to the user manual for each piece of equipment before utilizing this SOP.

Gross contamination can be removed by physical decontamination procedures. These abrasive and non-abrasive methods include the use of brushes and high and low pressure water cleaning.

The first step is the physical removal of gross contamination on sampling equipment which may include steam or a high pressure water wash. The second step is a soap and water wash that removes the remainder of visible material and residual oils and grease. The third step involves a potable water rinse to remove any detergent, followed by a distilled/deionized water rinse.

For the removal of metals, an acid rinse with a 10% nitric acid solution is used prior to the final distilled/deionized water rinse. For the removal of organics, pesticide grade acetone, methanol or hexane, depending on the specific contaminant of concern, will be applied prior to the final distilled/deionized rinse. Acetone is typically chosen because it is excellent at removing organics, miscible in water, and not a target analyte on the Priority Pollutant List. If acetone is known to be a contaminant of concern or if Target Compound List analysis (which includes acetone) is to be performed, another solvent such as methanol will need to be substituted.

Hexane should be used when the contaminant of concern is polychlorinated biphenyls (PCBs) or in oily media. The solvent must be allowed to evaporate completely and then a final distilled/deionized water rinse is performed. This rinse removes any residual traces of the solvent.

A generalized decontamination procedure is:

1. Physical removal
2. Non-phosphate detergent wash with potable water
3. Potable water rinse
4. Solvent rinse (acetone, hexane, etc.)

UNCONTROLLED COPY

5. Air dry
6. 10% nitric acid solution rinse
7. Distilled/deionized water rinse
8. Air dry

In instances in which sampling equipment is being used to collect samples for biological pathogens, the acid is replaced with a 10% bleach solution. Modifications to the standard procedure are required to be documented in the site-specific QAPP, field log book and subsequent reports. All decontamination water is replaced daily at a minimum. If at any point throughout the day the water becomes too dirty, then it is no longer suitable for cleaning and is required to be replaced. All sampling equipment is required to be decontaminated before collecting samples on-site and after use of each piece of sampling equipment.

Waste materials generated from the decontamination processes are referred to as Investigation-Derived Waste (IDW). Management of this waste should be in coordination with SOP#2049, *Investigative-Derived Waste Management.*

3.0 SAMPLE PRESERVATION, CONTAINERS, HANDLING, AND STORAGE

The amount of sample collected, along with the proper sample container type (i.e. glass, plastic), chemical preservation, and storage requirements are dependent upon the matrix sampled and analysis performed. For further information, refer to SERAS SOP #2003, *Sample Storage, Preservation and Handling.*

Sample collection and analysis of decontamination waste generated on-site may be required prior to disposal of decontamination liquids and solids. This should be determined prior to initiation of site activities or as soon as possible thereafter. For more information on handling of IDW, refer to SOP#2049, *Investigative-Derived Waste Management.*

4.0 INTERFERENCES AND POTENTIAL PROBLEMS

Acetone is an excellent solvent since it is miscible with water; however, if volatile organic compounds (VOCs) are to be analyzed, the use of an alternate solvent (methanol, hexane) should be considered since acetone is a compound on the Target Compound List (TCL).

The use of deionized (distilled if only option) water is required for decontamination of sampling equipment. In addition, that water is required to be lab certified, analyte free (specifically for the contaminants of concern). The deionized water must be secured prior to field activities as it is not commonly found local to the site.

The use of solvents and acids on sensitive sampling equipment may cause damage. It is important avoid damaging the equipment. If acids or solvents are utilized, follow health and safety, and waste disposal guidelines.

When decontaminating equipment when temperatures are below freezing, water will freeze in pump spray hoses lines, tanks and in buckets/pails, etc. Additionally, equipment will require longer drying times.

Do not store sampling equipment or reagents used for decontamination near gasoline or any exhaust emissions. Improperly cleaned and prepared sampling equipment can lead to misinterpretation of analytical data due to cross contamination.

UNCONTROLLED COPY

Make sure that the decontamination station is set up as not to compromise a clean environment.

5.0 EQUIPMENT/APPARATUS

Decontamination equipment is selected based on the type of equipment to be cleaned and anticipated contaminants to be removed. For example, soft-bristle scrub brushes or long-handled bottle brushes are used to remove contaminants. Large galvanized wash tubs, stock tanks, buckets, or children's wading pools hold wash and rinse solutions. Large plastic garbage cans or other similar containers lined with plastic bags help segregate contaminated equipment. Drums are used to store liquid and solid site derived waste.

The following standard materials and equipment are recommended for decontamination activities:

•

5.1 Decontamination Tools/Supplies

- Long and short handled brushes
- Bottle brushes, composed of nonmetallic material such as nylon
- Plastic sheeting
- Paper towels
- Plastic or galvanized tubs or buckets
- Pressurized sprayers filled with potable water
- Spray bottles
- Aluminum foil
- Pressure washer
- Garden hose
- Electrical cords
- Work lights (if working in the dark)
- Generator (if using a submersible pump or lights)
- Water tank
- Sump pump

5.2 Health and Safety Equipment

The use of personal protective equipment (PPE), (i.e. safety glasses or splash shield, Tyvek® suits, nitrile gloves, aprons or coveralls, steel toe boots, etc.), is required. Refer to the site-specific Health and Safety Plan (HASP) for site-specific requirements.

5.3 Waste Disposal

- Trash bags
- 55-gallon drums (open and closed top types)
- Metal/plastic buckets/containers for storage and disposal of decontamination solutions

UNCONTROLLED COPY

UNCONTROLLED COPY

6.0 REAGENTS

Table 1 (Appendix A) lists solvents recommended for the elimination of particular chemicals. In general, solvents typically utilized during the decontamination process are:

- 10% Nitric Acid (HNO_3), typically used for inorganic compounds such as metals
- Acetone (pesticide grade)
- Hexane (pesticide grade)
- Methanol (pesticide grade)
- Deionized/Distilled Water that meets ASTM Type II specifications
- Non-Phosphate Detergent
- Potable Water

7.0 PROCEDURES

A decontamination area should be set up prior to sampling. Weather conditions (i.e. hot, cold, rain, snow, etc.) play an important role in the decontamination process. In hot, cold, rainy or snowy conditions, a tent or canopy may be erected around and over the decontamination area. In cold environments, the decontamination may need to occur inside a building or portable heaters may be needed to warm the area under the tent or canopy. In addition, in cold environments the potable and deionized water may freeze. Plan accordingly and consider your working conditions prior to field sampling activities.

A decontamination plan needs to be implemented and includes:

- The number, location, and layout of decontamination stations
- Decontamination equipment
- Selection of appropriate decontamination methods
- Methods of disposal of all investigative derived waste (i.e. PPE, solid and liquid waste, etc.)
- Work practices that minimize contact with potential contaminants.
- Protection procedures for monitoring and sampling equipment (i.e. covering with plastic, etc.)
- Considerations related to weather conditions
- The use of disposable sampling equipment, when possible

7.1 Decontamination Methods

All samples and equipment removed from site must be decontaminated, removing all contamination that may have adhered to the equipment. Various decontamination methods remove contaminants by washing with water and another physical cleaning action. In addition, solvents and/or acids may be used to decontaminate the equipment.

Physical decontamination methods are grouped into two categories, abrasive and non-abrasive methods, and are listed below:

7.1.1 Abrasive Cleaning Methods

Abrasive cleaning methods work by rubbing and wearing away the top layer of the surface containing the contaminant. It involves the use of metal or nylon brushes. The amount and type of contaminants removed will vary with the brush type, length of time brushed,

degree of brush contact, degree of contamination, nature of the contaminant and surface being cleaned.

7.1.2 Non-Abrasive Cleaning Methods

Non-abrasive cleaning methods work by forcing the contaminant off a surface with water pressure (i.e. sprayer or pressure washer).

Low-Pressure Water

This method consists of a pressure sprayer filled with water. The user pumps air into the sprayer tank to create pressure. The water is then discharged through a slender nozzle and hose, cleaning the equipment. Scrubbing with a brush is typically used in conjunction with this method.

High-Pressure Water

This method consists of the use of a pressure washer. The operator controls the directional nozzle which is attached to a high-pressure hose. Operating pressure usually ranges from 400 – 600 pounds per square inch (PSI). Scrubbing with large brushes can be used to aid in the decontamination process.

Rinsing

Contaminants and any remaining solvents and/or acids are removed by thorough rinsing. The rinsing is done either by the use of a sprayer or a pressure washer depending on the equipment being cleaned.

Damp Cloth Removal

In some instances, due to sensitive, non-waterproof equipment or due to the unlikelihood of equipment being contaminated, it is not necessary to conduct an extensive decontamination procedure. For example, air sampling pumps attached to a fence, placed on a drum, or equipment protected by plastic or some other material are not likely to become heavily contaminated.

A damp cloth is used to wipe off any contaminants which may have adhered to equipment through airborne contaminants or from surfaces upon which the equipment was set. The use of a different cleaning cloth for each piece of equipment is required. Upon completion, dispose of all cloths with the site derived waste.

7.2 Field Sampling Equipment Decontamination Procedures

7.2.1 Decontamination Setup

The decontamination area is set up by laying out a section of plastic sheeting large enough for the type and amount of equipment to be decontaminated and for the equipment drop and equipment air drying areas.

UNCONTROLLED COPY

Stage brushes, pressure sprayers, spray bottles (w/appropriate solvents, acids and deionized water), 5-gallon buckets, plastic/galvanized wash tubs, pressure washer (if required) and detergent. Figure 1 (Appendix B) shows the decontamination area overall layout. Section 7.2.2 discusses the decontamination procedures depending on the contaminants of concern for a Site.

Stage the appropriate amount and type of sample bottles and a cooler, for the collection of rinsate samples. For specific rinsate sample information, refer to SERAS SOP #2005, *Quality Assurance/Quality Control Samples.*

7.2.2 Decontamination Procedures

There are various stations of the cleaning process in which the equipment move through that are designed to remove all visible contamination. Stations 1 and 2 are designed to remove all visible contamination. Additional stations after 1 and 2 remove materials that require dissolution and a final rinse. Once the equipment has passed through all stations, it is laid out to air dry.

Decontamination Process for Metals

Station 1 - Place the sampling equipment into the soapy water solution and thoroughly scrub with brushes or pressure washer. When there is no visible residue remaining, transfer to Station 2.

Station 2 - Rinse the equipment in the bucket/tub with potable water. Then remove from the bucket/tub and rinse with the pressure sprayer. When satisfied with the cleanliness of the sampling equipment, transfer to Station 3.

Station 3 - Apply the acid solution and air dry on the plastic sheeting, behind Station 3. Once equipment has fully dried, transfer to Station 4.

Station 4 - Rinse the equipment with the pressure sprayer filled with deionized water. When satisfied the rinsing process is complete, transfer to the equipment drying area. After drying, the equipment should be wrapped in aluminum foil to prevent contamination of the equipment.

Decontamination Process for Organics

Station 1 - Place the sampling equipment into the soapy water solution and thoroughly scrub with brushes. When there is no visible residue remaining, transfer to Station 2

Station 2 - Rinse the equipment in the bucket/tub with potable water. Then remove from the bucket/tub and rinse with the pressure sprayer. When satisfied with the cleanliness of the sampling equipment, transfer to Station 3.

Station 3 - Apply the appropriate solvent or solvents and air dry on the plastic sheeting, behind Station 3. Once equipment has fully dried, transfer to Station 4.

UNCONTROLLED COPY

Station 4 - Rinse the equipment with the pressure sprayer filled with deionized water. When satisfied the rinsing process is complete, transfer to the equipment drying area.

Decontamination process for Metals and Organics

Station 1 - Place the sampling equipment into the soapy water solution and thoroughly scrub with brushes. When there is no visible residue remaining, transfer to Station 2.

Station 2 - Rinse the equipment in the bucket/tub with potable water. Then remove from the bucket/tub and rinse with the pressure sprayer. When satisfied with the cleanliness of the sampling equipment, transfer to Station 3.

Station 3 - Apply the acid solution and transfer to Station 4.

Station 4 - Rinse the equipment with the pressure sprayer filled with deionized water. When satisfied the rinsing process is complete, transfer to Station 5.

Station 5- Apply the solvent or solvents and air dry on the plastic sheeting behind Station 5. Once equipment has fully dried, transfer to Station 6.

Station 6 - Rinse the equipment with the pressure sprayer filled with deionized water. When satisfied the rinsing process is complete, transfer to the equipment drying area. After drying, the equipment should be wrapped in aluminum foil to prevent contamination of the equipment.

7.2.3 Post Decontamination Procedures

1. Fill out the appropriate labels for the all the various wastes and affix the labels to the drums and/or containers.

2. Clean up the entire work area. Collect solid waste (i.e. nitrile gloves, plastic sheeting, etc.) and store in an appropriate DOT certified drum.

3. Return any remaining unused solvents or acid solutions to their respective labeled containers and properly store.

4. Transfer potable water rinse waste into an appropriate Department of Transportation (DOT) certified drum or container.

5. Transfer the solvent and acid solution rinse water waste into the appropriately labeled DOT certified drums or containers.

6. Using a pressure sprayer, rinse the basins/buckets.

7. Transfer liquid generated from this process into the potable water rinse waste container.

8. Transfer the decontamination brushes into the solid waste container.

UNCONTROLLED COPY

9. Empty the pressure sprayer filled with potable water onto the ground.

10. Return all equipment into their carrying cases or shipping containers.

11. Make arrangements for the pickup of all liquid and solid waste.

For further information on waste disposal, refer to SERAS SOP 2049, *Investigation Derived Waste Management.*

7.3 Decontamination of Earth Moving Equipment/Drilling Equipment and Accessories

The decontamination of earth moving and/or drilling equipment and their accessories will require the use of a pressure washer. In addition, an on-site water supply will need to be available. If an on-site water supply is not available, a water tank along with a pump, hoses and a generator will be required. Finally, a designated area on-site needs to be designated as a decontamination area. Some sites already have a concrete pad set-up for this very purpose. If this is not the case, work with the Work Assignment Manager (WAM) to assign a location for these activities to take place on-site.

An area for decontamination can be built with 4x4 lumber or hay bales, heavy duty plastic sheeting and a sump pump. The area will need to extend at least 4 feet beyond the outer dimensions of the equipment being cleaned. Either slope the decontamination area down to one corner or dig a small hole about 2 feet by 2 feet square and about 2 feet deep to allow for the collection of the decontamination water. Cover the decontamination area with plastic sheeting, wrapping the sides around and under the 4 x 4 lumber or bales of hay. If equipment being decontaminated includes equipment with tracks that might tear through the plastic sheeting, appropriate surfaces need to be included for the equipment to drive on. Finally, place a sump pump into this area and periodically empty the water as necessary, into the appropriately labeled liquid waste drum.

7.3.1 Decontamination Set-up Procedures:

1. Move the equipment into the decontamination area.

2. Stage all the decontamination equipment and supplies (i.e. Pressure Washer, Hoses, PPE, etc.)

3. Connect all hoses and fill the pressure washer with fuel.

4. Dress out in the appropriate PPE (refer to the site-specific HASP).

At a minimum, Tyvek®, safety glasses/goggles, steel toe boots, and nitrile gloves must be worn. If handling any equipment (i.e. drill rods, etc.) work gloves must also be worn to prevent possible injury. For site specific requirements refer to the site-specific HASP.

7.3.2 Decontamination Cleaning Procedures:

1. Physically remove as much of the visible material as possible from the heavy equipment after use and prior to steam cleaning. If contaminated material is suspected as determined by visual observations, instrument readings, or other means, collect material in an appropriate waste container.

UNCONTROLLED COPY

2. Place the heavy equipment on the decontamination pad in the decontamination area. Verify the decontamination pad has no leaks and the sump pump is functioning properly before beginning the decontamination process.

3. Power on the pressure washer and begin cleaning from the top to the bottom. Thoroughly clean parts of the heavy machinery that come into contact with visible material (such as tires, bucket, augers, drill rods, tracks and the back and underneath of the drill rig). Scrub areas with excessive dirt/debris with large bristle brushes. A flat head shovel can be used to aide in the removal of the dirt/debris. Continue cleaning until all visible contamination has been removed. If required, apply solvents and/or acid solutions, rinse with deionized/distilled water and then let air dry.

The use of solvents and/or acid solutions will depend on site specific conditions. Check with the site-specific HASP for further guidance.

7.3.3 Post Decontamination Procedures

1. Fill out the appropriate labels for the all the various wastes and affix the labels to the drums and/or containers

2. Transfer potable water rinse waste into an appropriate Department of Transportation (DOT) certified drum or container. Transfer water from the decontamination pad to the liquid waste drums using a sump pump.

3. Collect and transfer solid waste (i.e. nitrile gloves, plastic sheeting, etc.) to a DOT-certified drum or container.

4. Transfer the solvent and acid solution rinse water waste into the appropriately labeled DOT-certified drums or containers.

5. Make arrangements for the pickup of all liquid and solid waste.

For further information on waste disposal, refer to SERAS SOP 2049, *Investigation Derived Waste Management*.

8.0 CALCULATIONS

This section is not applicable to this SOP.

9.0 QUALITY ASSURANCE/QUALITY CONTROL

Documentation of the decontamination process including date, time and personnel that conducted the decontamination activities must be recorded in a field logbook. Record manufacturer and lot numbers of the reagents used for the decontamination procedures.

A rinsate blank is a specific type of quality control sample associated with the field decontamination process. This sample will provide information on the effectiveness of the decontamination process employed in the field. Rinsate blanks are samples obtained by pouring analyte free deionized water over previously

UNCONTROLLED COPY

decontaminated sampling equipment, testing for residual contamination. The blank water is then collected in sample containers, processed, shipped and analyzed. The rinsate blank is used to assess possible cross-contamination caused by improper decontamination procedures. The most common frequency of collection is one rinsate blank per day per type of sampling device, to meet definitive data objectives. For further information for each analysis, refer to SERAS SOP #2005, *Quality Assurance/Quality Control Samples.*

For information on sample container types and preservation, refer to SERAS SOP #2003, *Sample Storage, Preservation and Handling.*

If sampling equipment requires the use of Teflon® or polyethylene tubing it is required to be disposed of into the on-site waste container and replaced with clean tubing before additional sampling occurs.

10.0 DATA VALIDATION

Data verification (completeness checks) must be conducted to ensure that all data inputs are present for ensuring the availability of sufficient information. These data are essential to providing an accurate and complete final deliverable. Results of quality control samples will be evaluated for possible cross-contamination of improperly or inadequately decontaminated sampling equipment. This data will be utilized to quantify the sample results in accordance with the project's data quality objectives. The SERAS Task Leader (TL) is responsible for completing the UFP-QAPP verification checklist for each project.

11.0 HEALTH AND SAFETY

When working with potentially hazardous materials, follow Occupational Safety and Health (OSHA), U.S. EPA, corporate, and other applicable health and safety procedures.

The decontamination process can pose hazards under certain circumstances. Hazardous substances may be incompatible with decontamination materials. For example, the decontamination solution may react with contaminants to produce heat, explosion, or toxic products. Also, vapors from decontamination solutions may pose a direct health hazard to workers by inhalation, contact, fire, or explosion.

The decontamination solutions must be determined to be acceptable before their use. Decontamination materials may degrade protective clothing or equipment and some solvents can permeate protective clothing. If decontamination materials pose a health hazard, measures are to be taken to protect personnel. Alternatively, substitutions can be made to eliminate the hazard. The choice of respiratory protection based on contaminants of concern from the site may not be appropriate for solvents used in the decontamination process. Material generated from decontamination activities requires proper handling, storage, and disposal. PPE may be required for these activities.

Safety data sheets (SDS) are required for all decontamination solvents or solutions as required by the Hazard Communication Standard (i.e. acetone, alcohol, etc.).

12.0 REFERENCES

Field Sampling Procedures Manual, New Jersey Department of Environmental Protection, August 2005.

Compendium of Superfund Field Operations Methods, EPA 540/p-87/001.

UNCONTROLLED COPY

The Field Branches Quality System and Technical Procedures – Field Equipment Cleaning and Decontamination, USEPA Region IV Science and Ecosystem Support Division, November 2007.

Guidelines for the Selection of Chemical Protective Clothing, Volume 1, Third Edition, American Conference of Governmental Industrial Hygienists, Inc., February 1987.

Occupational Safety and Health Guidance Manual for Hazardous Waste Site Activities, NIOSH/OSHA/USCG/EPA, October 1985.

UNCONTROLLED COPY

APPENDIX A
Tables
SOP #2006
December 2015

UNCONTROLLED COPY

TABLE 1. Soluble Contaminants and Recommended Solvent Rinse

SOLVENT[1]	EXAMPLES OF SOLVENTS	SOLUBLE CONTAMINANTS
Water	Deionized water Potable water	Low-chain hydrocarbons Inorganic compounds Salts Some organic acids and other polar compounds
Dilute Acids	Nitric acid Acetic acid Boric acid	Basic (caustic) compounds (e.g., amines and hydrazine's) and inorganic compounds.
Dilute Bases	Sodium bicarbonate	Acidic compounds Phenol Thiols Some nitro and sulfonic compounds
Organic Solvents [2]	Acetone Alcohols Ketones Aromatics Alkanes (e.g., hexane) Common petroleum products (i.e. fuel, oil, kerosene)	Nonpolar compounds (e.g., some organic compounds)
Organic Solvent[2]	Hexane	PCBs

[1] - Safety data sheets are required for all decontamination solvents or solutions as required by the Hazard Communication Standard

[2] - WARNING: Some organic solvents can permeate and/or degrade protective clothing

UNCONTROLLED COPY

APPENDIX B
Figures
SOP #2006
December 2015

UNCONTROLLED COPY

FIGURE 1. Sampling Equipment Decontamination Area

Configuration for the Removal of Metals

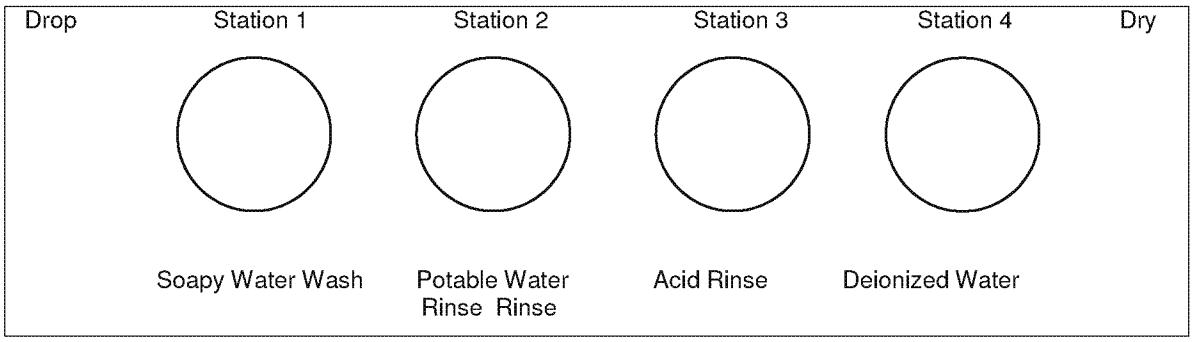

Configuration for the Removal of Organics

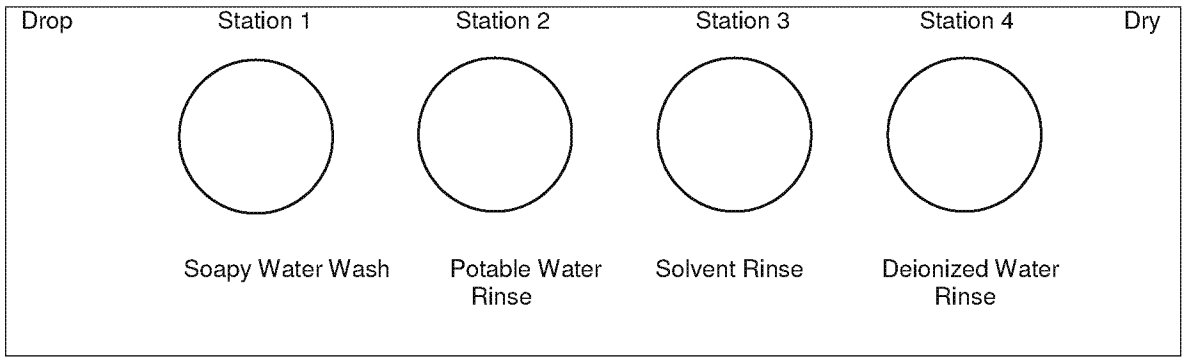

Configuration for the Removal of Metals and Organics

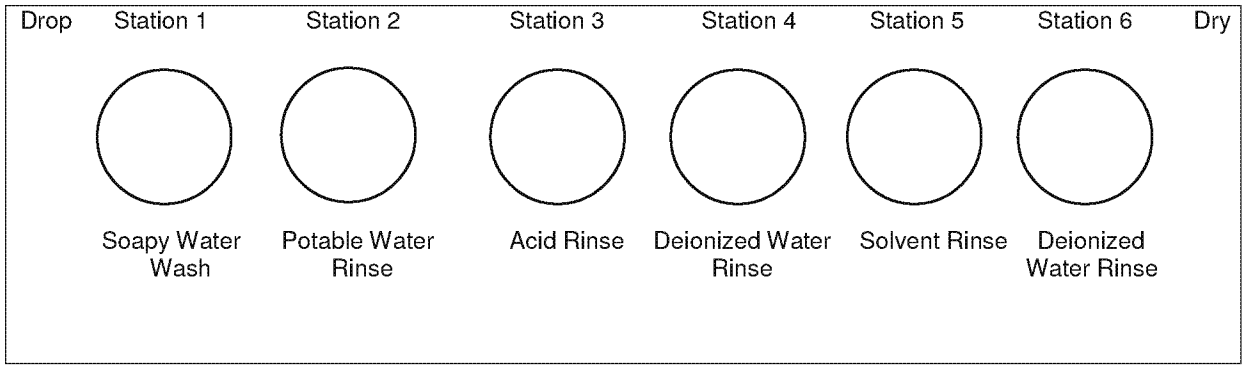

UNCONTROLLED COPY

SOIL SAMPLING

CONTENTS

1.0 SCOPE AND APPLICATION*

2.0 METHOD SUMMARY*

3.0 SAMPLE PRESERVATION, CONTAINERS, HANDLING, AND STORAGE*

4.0 INTERFERENCES AND POTENTIAL PROBLEMS*

5.0 EQUIPMENT/APPARATUS*

6.0 REAGENTS

7.0 PROCEDURES

- 7.1 Preparation*
- 7.2 Sample Collection
  - 7.2.1 Surface Soil Samples*
  - 7.2.2 Sampling at Depth with Augers and Thin Wall Tube Samplers*
  - 7.2.3 Sampling at Depth with a Trier*
  - 7.2.4 Sampling at Depth with a Split Spoon (Barrel) Sampler*
  - 7.2.5 Test Pit/Trench Excavation*
  - 7.2.6 Sampling for VOCs in Soil Using an Encore® Sampler

8.0 CALCULATIONS

9.0 QUALITY ASSURANCE/QUALITY CONTROL*

10.0 DATA VALIDATION

11.0 HEALTH AND SAFETY*

12.0 REFERENCES*

13.0 APPENDICES

A - Figures

*These sections affected by Revision 1.0.

SUPERCEDES: SOP #2012; Revision 0.0; 2/18/00; U.S. EPA Contract 68-C99-223.

1.0 SCOPE AND APPLICATION

The purpose of this Standard Operating Procedure (SOP) is to describe procedures for the collection of representative surface soil samples. Sampling depths are assumed to be those that can be reached without the use of a drill rig, direct-push technology, or other mechanized equipment (except for a back-hoe). Sample depths typically extend up to 1-foot below ground surface. Analysis of soil samples may define the extent of contamination, determine whether concentrations of specific contaminants exceed established action levels, or if the concentrations of contaminants present a risk to public health, welfare, or the environment.

These are standard (i.e., typically applicable) operating procedures which may be varied or changed as required, dependent upon site conditions, equipment limitations, or limitations imposed by the procedure. In all instances, the ultimate procedures employed should be documented and associated with a final report.

Mention of trade names or commercial products does not constitute United States Environmental Protection Agency (U.S. EPA) endorsement or recommendation for use.

2.0 METHOD SUMMARY

Surface soil samples can be used to investigate contaminants that are persistent in the near surface environment. Contaminants that are detected in the near surface environment may extend to considerable depths, may migrate to the groundwater, surface water, the atmosphere, or may enter biological systems.

Soil samples may be collected using a variety of methods and equipment depending on the depth of the desired sample, the type of sample required (discrete or composite), and the soil type. Near-surface soils may be easily sampled using a spade, trowel, and/or scoop. Sampling at greater depths may be performed using a hand auger, continuous-flight auger, trier, split-spoon sampler, or, if required, a backhoe.

3.0 SAMPLE PRESERVATION, CONTAINERS, HANDLING, AND STORAGE

Samples must be cooled and maintained at 4°C and protected from sunlight immediately upon collection to minimize any potential reaction. The amount of sample to be collected, proper sample container type and handling requirements are discussed in the Scientific, Engineering, Response Analytical Services (SERAS) SOP #2003, *Sample Storage, Preservation and Handling*.

4.0 INTERFERENCES AND POTENTIAL PROBLEMS

There are two primary problems associated with soil sampling: 1) cross contamination of samples, and 2) improper sample collection. Cross contamination problems can be eliminated or minimized through the use of dedicated sampling equipment. If this is not possible or practical, decontamination of sampling equipment is necessary. The guidelines for preventing, minimizing and limiting cross contamination of samples are discussed in the Environmental Response Team (ERT)/SERAS SOP #2006, *Sampling Equipment Decontamination*. Improper sample collection procedures can disturb the sample matrix, resulting in volatilization of contaminants, compaction of the sample, or inadequate homogenization of the samples (when required), resulting in variable, non-representative results.

5.0 EQUIPMENT/APPARATUS

Soil sampling equipment includes the following:

- Site maps/plot plan
- Safety equipment, as specified in the site-specific Health and Safety Plan (HASP)
- Traditional survey equipment or global positioning system (GPS)
- Tape measure
- Survey stakes or flags
- Camera and image collection media
- Stainless steel, plastic*, or other appropriate homogenization bucket, bowl or pan
- Appropriate size sample containers
- Ziplock plastic bags
- Site logbook
- Labels
- Chain of Custody records and custody seals
- Field data sheets and sample labels
- Cooler(s)
- Ice
- Vermiculite
- Decontamination supplies/equipment
- Plastic sheeting
- Spade or shovel
- Spatula(s)
- Scoop(s)
- Plastic* or stainless steel spoons
- Trowel(s)
- Continuous flight (screw) auger
- Bucket auger
- Post hole auger
- Extension rods
- T-handle
- Sampling trier
- Thin wall tube sampler
- Split spoon sampler
- Soil core sampler
  - Tubes, points, drive head, drop hammer, puller jack and grip
- Photoionization detector (PID), Flame ionization detector (FID) and/or Respirable Aerosol Monitor (RAM)
- Backhoe (as required)
- En Core® samplers

* Not used when sampling for semivolatile compounds.

6.0 REAGENTS

Decontamination solutions are specified in ERT/SERAS SOP #2006, *Sampling Equipment Decontamination*, and the site specific work plan.

7.0 PROCEDURES

7.1 Preparation

1. Determine the extent of the sampling effort, the analytes to be determined, the sampling methods to be employed, and the types and amounts of equipment and supplies required to accomplish the assignment.

2. Obtain the necessary sampling and air monitoring equipment.

3. Prepare schedules and coordinate with staff, client, and regulatory agencies, as appropriate.

4. Perform a general site reconnaissance survey prior to site entry in accordance with the site specific HASP.

5. Use stakes or flags to identify and mark all sampling locations. Specific site factors, including extent and nature of contamination, should be considered when selecting sample locations. If required, the proposed locations may be adjusted based on site access, property boundaries, and surface obstructions. All staked locations should be utility-cleared prior to soil sampling; utility clearances must be confirmed before beginning intrusive work.

6. Pre-clean and decontaminate equipment in accordance with the site specific work plan, and ensure that it is in working order.

7.2 Sample Collection

7.2.1 Surface Soil Samples

The collection of samples from near-surface soil can be accomplished with tools such as spades, shovels, trowels, and scoops. The over-burden or over-lying surface material is removed to the required depth and a stainless steel or plastic scoop is used to collect the sample. Plastic utensils are not to be used when sampling for semivolatile compounds.

This method can be used in most soil types but is limited to sampling at or near the ground surface. Accurate, representative samples can be collected by this procedure depending on the care and precision demonstrated by the sample team member. A flat, pointed mason trowel to cut a block of the desired soil is helpful when undisturbed profiles are required. Tools plated with chrome or other materials must not be used.

The following procedure is used to collect surface soil samples:

1. If volatile organic compound (VOC) contamination is suspected, use a PID to monitor the sampler's breathing zone during soil sampling activities.

2. Using a pre-cleaned, stainless steel scoop, plastic spoon, or trowel, remove and discard sticks, rocks, vegetation and other debris from the sampling area.

3. Accumulate an adequate volume of soil, based on the type(s) of analyses to be performed, in

a stainless, plastic or other appropriate container.

4. If volatile organic analysis is to be performed, immediately transfer the sample directly into an appropriate, labeled sample container with a stainless steel spoon, or equivalent, and secure the cap tightly to ensure that the volatile fraction is not compromised. Thoroughly mix the remainder of the soil to obtain a sample that is representative of the entire sampling interval. Then, either place the sample into appropriate, labeled containers and secure the caps tightly, or, if composite samples are to be collected, place a sample from another sampling interval or location into the homogenization container and mix thoroughly. When compositing is complete, place the sample into appropriate, labeled containers and secure the caps tightly.

7.2.2 Sampling at Depth with Augers and Thin Wall Tube Samplers

This system consists of an auger, head, a series of extensions, and a "T" handle (Figure 1, Appendix A). The auger is used to bore a hole to a desired sampling depth, and is then withdrawn. The sample may be collected directly from the auger head. If additional sample volume is required, multiple grabs at the same depth are made. If a core sample is to be collected, the auger head is then replaced with a tube auger. The system is then lowered down the borehole, and driven into the soil to the completion depth. The system is withdrawn and the core is collected.

Several types of augers are available; these include bucket or tube type, and continuous flight (screw) or post-hole augers. Bucket or tube type augers are better for direct sample recovery because a large volume of sample can be collected from a discrete area in a short period of time. When continuous flight or post-hole augers are used, the sample can be collected directly from the flights or from the borehole cuttings. The continuous flight or post-hole augers are satisfactory when a composite of the complete soil column is desired, but have limited utility for sample collection as they cannot be used to sample a discrete depth.

The following procedure is used for collecting soil samples with an auger:

1. Attach the auger head to an extension rod and attach the "T" handle.

2. Clear the area to be sampled of surface debris (e.g., twigs, rocks, litter). It may be advisable to remove a thin layer of surface soil for an area approximately six inches in radius around the sampling location.

3. Begin augering, periodically removing and depositing accumulated soils onto a plastic sheet spread near the hole. This prevents the accidental brushing of loose material back down the borehole when removing the auger or adding extension rods. It also facilitates refilling the hole, and avoids possible contamination of the surrounding area.

4. After reaching the desired depth, slowly and carefully remove the auger from the hole. When sampling directly from the auger head, proceed to Step 10.

5. Remove auger tip from the extension rods and replace with a tube sampler. Install the

proper cutting tip.

6. Carefully lower the tube sampler down the borehole. Gradually force the tube sampler into the soil. Do not scrape the borehole sides. Avoid hammering the rods as the vibrations may cause the boring walls to collapse.

7. Remove the tube sampler and unscrew the extension rods.

8. Remove the cutting tip and the core from the device.

9. Discard the top of the core (approximately 1 inch), as this possibly represents material collected before penetration of the layer of concern. Place the core or a discrete portion of the core into the appropriate labeled sample container using a clean, decontaminated stainless steel spoon. If required, homogenize the sample as described in Step 10.

10. If VOC analysis is to be performed, transfer the sample directly from the auger head into an appropriate, labeled sample container with a stainless steel spoon, or equivalent and secure the cap tightly.

11. If another sample is to be collected in the same hole, but at a greater depth, reattach the auger head to the drill assembly, and follow steps 3 through 11, making sure to decontaminate the auger head and tube sampler between samples.

12. Abandon the hole according to applicable state regulations.

7.2.3 Sampling at Depth with a Trier

The system consists of a trier and a "T" handle. The auger is driven into the soil to be sampled and used to extract a core sample from the appropriate depth.

The following procedure is used to collect soil samples with a sampling trier:

1. Insert the trier (Figure 2, Appendix A) into the material to be sampled at a zero degree to forty-five degree (0° to 45°) angle from the soil surface plane. This orientation minimizes the spillage of sample.

2. Rotate the trier once or twice to cut a core of material.

3. Slowly withdraw the trier, making sure that the slot is facing upward.

4. If VOC analyses are required, transfer the sample directly from the trier into an appropriate, labeled sample container with a stainless steel spoon, or equivalent device and secure the cap tightly. Place the remainder of the sample into a stainless steel, plastic, or other appropriate homogenization container and mix thoroughly to obtain a sample that is representative of the entire sampling interval. Then, either place the sample into appropriate, labeled containers and secure the caps tightly; if composite samples are to be collected, place a sample from another sampling interval into the

homogenization container and mix thoroughly. When compositing is complete, place the sample into appropriate, labeled containers and secure the caps tightly.

7.2.4 Sampling at Depth with a Split Spoon (Barrel) Sampler

Split spoon sampling is generally used to collect undisturbed soil cores of 18- or 24- inches in length. A series of consecutive cores may be extracted with a split spoon sampler to give a complete soil column profile, or an auger may be used to drill down to the desired depth for sampling. The split spoon is then driven to its sampling depth through the bottom of the augured hole and the core extracted.

When split spoon sampling is performed to gain geologic information, all work should be performed in accordance with American Society for Testing and Materials (ASTM) D1586-99, "*Standard Test Method for Penetration Test and Split-Barrel Sampling of Soils*".

The following procedures are used for collecting soil samples with a split spoon:

1. Assemble the sampler by aligning both sides of the barrel and then screwing the drive shoe on the bottom and the head piece on top.

2. Place the sampler at a 90 degree (90°) angle to the sample material.

3. Using a well ring, drive the sampler. Do not drive past the bottom of the head piece or compression of the sample will result.

4. Record in the site logbook or on field data sheets the length of the tube used to penetrate the material being sampled, and the number of blows required to obtain the sample.

5. Withdraw the sampler, and open it by unscrewing the bit and head, and then splitting the barrel. The amount of recovery and soil type should be recorded on the boring log. If a split sample is desired, a cleaned, stainless steel knife should be used to divide the tube contents in half, longitudinally. This sampler is typically available in 2- and 3.5-inch diameter tubes. A larger barrel (diameter and/or length) may be necessary to obtain the required sample volume.

6. Without disturbing the core, transfer it to the appropriately labeled sample container(s) and seal tightly. Place the remainder of the sample into a stainless steel, plastic, or appropriate homogenization container, and mix thoroughly to obtain a sample that is representative of the entire sampling interval. Then, either place the sample into the appropriate, labeled containers and secure the caps tightly, or if composite samples are to be collected, place a sample from another sampling interval or location into the homogenization container and mix thoroughly. When compositing is complete, place the sample into the appropriate, labeled containers and secure the caps tightly.

7. Abandon the hole according to applicable state regulations.

7.2.5 Test Pit/Trench Excavation

A backhoe can be used to remove sections of soil when a detailed examination of stratigraphy and soil characteristics is required. The following procedures are used for collecting soil samples from test pits or trenches:

1. Prior to any excavation with a backhoe, it is imperative to ensure that all sampling locations are clear of overhead and buried utilities.

2. Review the site specific HASP and ensure that all safety precautions including appropriate monitoring equipment are installed as required.

3. Using the backhoe, excavate a trench approximately three feet wide and approximately one foot deep below the cleared sampling location. Place excavated soils on plastic sheets. Trenches greater than five feet deep must be sloped or protected by a shoring system, as required by Occupational Safety and Health Administration (OSHA) regulations.

4. A shovel is used to remove a one to two inch layer of soil from the vertical face of the pit where sampling is to be done.

5. Samples are taken using a trowel, scoop, or coring device at the desired intervals. Be sure to scrape the vertical face at the point of sampling to remove any soil that may have fallen from above, and to expose fresh soil for sampling. In many instances, samples can be collected directly from the backhoe bucket.

6. If VOC analyses are required, transfer the sample into an appropriate, labeled sample container with a stainless steel spoon, or equivalent and secure the cap tightly. Place the remainder of the sample into a stainless steel, plastic, or other appropriate homogenization container, and mix thoroughly to obtain a sample representative of the entire sampling interval. Then, either place the sample into appropriate, labeled containers and secure the caps tightly; or, if composite samples are to be collected, place a sample from another sampling interval into the homogenization container and mix thoroughly. When compositing is complete, place the sample into the appropriate, labeled containers and secure the caps tightly.

7. Abandon the pit or excavation according to applicable state regulations.

7.2.6 Sampling for VOCs in Soil Using an En Core® Sampler

An En Core® sampler is a single-use device designed to collect and transport samples to the laboratory. The En Core® sampler is made of an inert composite polymer and reduces the open-air handling of soil samples in the field and in the laboratory; thereby, minimizing losses of VOCs.

1. Assemble the coring body, plunger rod and T-handle according to the instructions provided with the En Core® sampler.

2. Turn the T-handle with the T-up and the coring body down and push the sampler into the soil until the coring body is completely full. Remove the sampler from the soil. Wipe excess soil from the coring body exterior.

3. Cap the coring body while it is still on the T-handle. Push the cap over the flat area of the ridge. Be sure that the cap is seated properly to seal the sampler. Push and cap to lock arm in place.

4. Remove the capped sampler by depressing the locking lever on the T-handle while twisting and pulling the sampler from the T-handle.

5. Attach the label to the coring body cap, place in a plastic zippered bag, seal and put on ice.

Generally, three En Core® samplers are required for each sample location. These samplers are shipped to the laboratory where the cap is removed and the soil samples are preserved with methanol or sodium bisulfate.

8.0 CALCULATIONS

This section is not applicable to this SOP.

9.0 QUALITY ASSURANCE/QUALITY CONTROL

There are no specific quality assurance (QA) activities that apply to the implementation of these procedures. However, the following general QA procedures apply:

2. All data must be documented in site logbooks or on field data sheets. At a minimum, the following data is recorded:

   Sampler's name and affiliation with project
   Sample number
   Sample location
   Sample depth
   Approximate volume of sample collected
   Type of analyses to be performed
   Sample description
   Date and time of sample collection
   Weather conditions at time of sampling
   Method of sample collection
   Sketch of sample location

2. All instrumentation must be operated in accordance with applicable SOPs and/or the manufacturer's operating instructions, unless otherwise specified in the work plan. Equipment checkout and calibration activities must occur prior to sampling/operation, and must be documented.

3. The types of quality control (QC) samples to be collected in the field shall be documented in the site-specific Work Plan.

10.0 DATA VALIDATION

This section is not applicable to this SOP.

11.0 HEALTH AND SAFETY

When working with potentially hazardous materials, follow U.S. EPA, OSHA and corporate health and safety procedures, in addition to the procedures specified in the site specific HASP.

12.0 REFERENCES

Mason, B.J. 1983. *Preparation of Soil Sampling Protocol: Technique and Strategies*. EPA-600/4-83-020.

Barth, D.S. and B.J. Mason. 1989. *Soil Sampling Quality Assurance User's Guide*. EPA-600/8-89-046.

U.S. Environmental Protection Agency. 1984. *Characterization of Hazardous Waste Sites - A Methods Manual: Volume II*. Available Sampling Methods, Second Edition. EPA-600/4-84-076.

de Vera, ER, B.P. Simmons, R.D. Stephen, and D.L. Storm. 1980. *Samplers and Sampling Procedures for Hazardous Waste Streams*. EPA-600/2-80-018.

American Society for Testing and Materials. *Standard Test Method for Penetration Test and Split-Barrel Sampling of Soils*. Method D 1586-99.

En Novative Technologies, Inc. 2001. *En Core® Sampler Sampling Procedures*. Web site access. March 13, 2001.

APPENDIX A
Figures
SOP #2012
July 2001

FIGURE 1. Sampling Augers

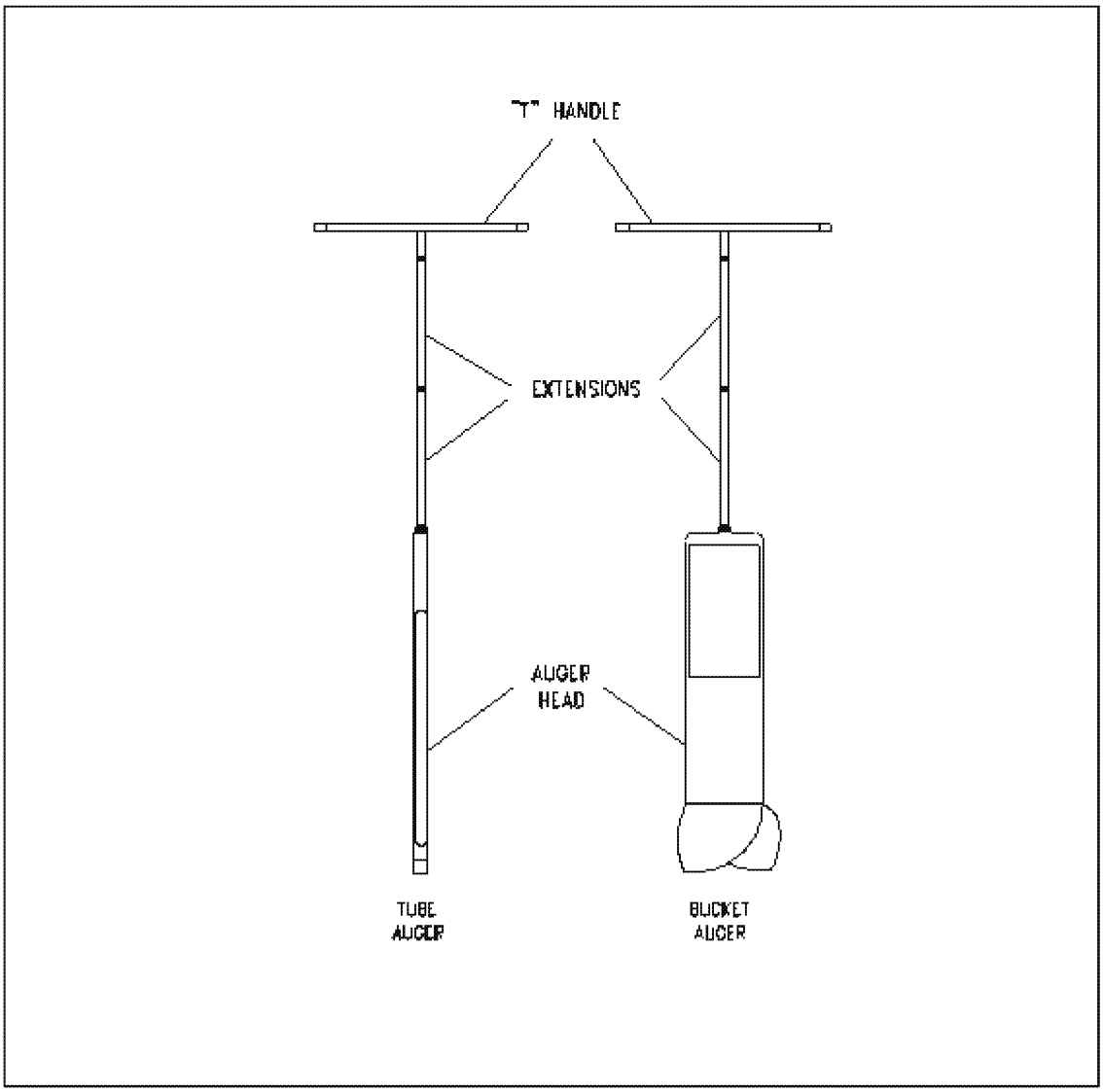

FIGURE 2. Sampling Trier

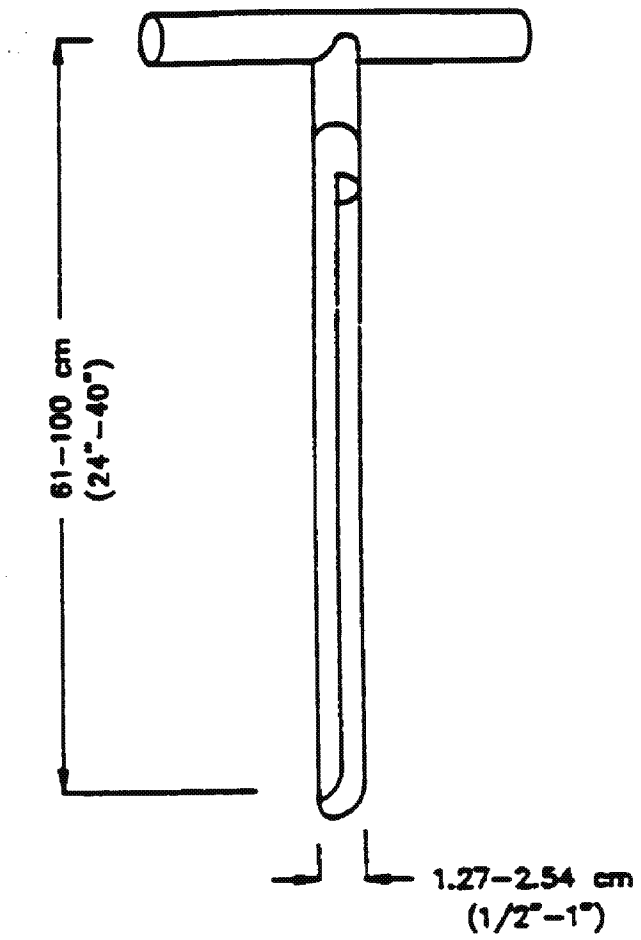
61–100 cm
(24"–40")
1.27–2.54 cm
(1/2"–1")

STANDARD OPERATING PROCEDURE APPROVAL AND CHANGE FORM

Scientific, Engineering, Response and Analytical Services
2890 Woodbridge Avenue Building 209 Annex
Edison New Jersey 08837-3679

STANDARD OPERATING PROCEDURE

Title: Operation of the Model 6620 DT Geoprobe

Approval Date: 06/25/2015

Effective Date: 06/25/2015 | SERAS SOP Number: 2050, Rev 1.0

Authors

Name Christopher French

Title SERAS Environmental Technician

Signature [signature] Date 6/23/15

Name Joseph Policastri

Title SERAS Environmental Technician

Signature Jean Bo for Joseph Policastri Date 6/23/15

Approvals

Name Richard Leuser

Title SERAS Deputy Program Manager

Signature [signature] Date 6/23/2015

Name

Title

Signature Date

Name Deb Killeen

Title SERAS QA/QC Officer

Signature [signature] Date 6/23/15

Name Kevin Taylor

Title SERAS Program Manager

Signature [signature] Date 6/23/15

The top row of this table shows the most recent changes to the controlled document. For previous revision history information, archived versions of this document are maintained by the SERAS QA/QC Officer on the SERAS local area network (LAN).

History	Effective Date
Supersedes: SOP #2050, Revision 0.0, dated 10/24/03	06/25/15

OPERATION OF THE MODEL 6620 DT GEOPROBE

UNCONTROLLED COPY

CONTENTS

1.0 SCOPE AND APPLICATION

2.0 METHOD SUMMARY

3.0 SAMPLE PRESERVATION, CONTAINERS, HANDLING, AND STORAGE

4.0 INTERFERENCES AND POTENTIAL PROBLEMS

5.0 EQUIPMENT/APPARATUS

6.0 REAGENTS

7.0 PROCEDURES

- 7.1 Preparation
- 7.2 Geoprobe Setup
- 7.3 Drilling Through Pavement or Concrete
- 7.4 Probing
- 7.5 Probing - Adding Rods
- 7.6 Probing - Pulling Rods
- 7.7 Soil Gas Sampling – Implant Installation
- 7.8 Soil Gas Sampling – Post Run Tubing (PRT) retractable point holder
- 7.9 Soil Sampling – MC5 system
- 7.10 Groundwater Sampling – SP 16
- 7.11 Installation of Geoprobe Monitor Wells
- 7.12 Hollow Stem Auger Attachment

8.0 CALCULATIONS

9.0 QUALITY ASSURANCE/QUALITY CONTROL

10.0 DATA VALIDATION

11.0 HEALTH AND SAFETY

12.0 REFERENCES

13.0 APPENDIX

A –FIGURES

Complete Rewrite: Supersedes SOP #2050; Revision 0.0; 10/24/03, U.S. EPA Contract 68-C99-223

OPERATION OF THE MODEL 6620 DT GEOPROBE

UNCONTROLLED COPY

1.0 SCOPE AND APPLICATION

The purpose of this Standard Operating Procedure (SOP) is to describe basic procedures for collecting representative soil, soil-gas, and groundwater samples using the Model 6620DT Geoprobe. This SOP is not a substitute for the *Geoprobe® Model 6620DT Direct Push Machine Owner's Manual,* which should be consulted for additional details and required maintenance procedures.

A Quality Assurance Project Plan (QAPP) in Uniform Federal Policy (UFP) format describing the project objectives must be prepared prior to deploying for a sampling event. The sampler needs to ensure that the methods used are adequate to satisfy the data quality objectives listed in the QAPP for a particular site.

The procedures in this SOP may be varied or changed as required, dependent on site conditions, equipment limitations or other procedural limitations. In all instances, the procedures employed must be documented on a Field Change Form and attached to the QAPP. These changes must be documented in the final deliverable.

2.0 METHOD SUMMARY

The Geoprobe is hydraulically powered and mounted on an all surface track unit which is controlled remotely. To begin the probing process the foot of the Geoprobe is positioned on the ground over the sampling location with the probe foot then lowered making contact with the ground surface. Then the hammer mechanism is raised and a probe rod, cutting shoe/drive point and drive cap are positioned below. The hammer mechanism is then lowered along with hydraulic down force pushing the rod into the ground. This process will continue until the entire length of the rod is advanced. Depending on the target depth multiple rod sections may be added. Depth of penetration varies significantly depending on the soil conditions as well as the diameter of tooling being advanced. This unit has under favorable conditions probed to 100 feet below ground surface (bgs). Specific tooling components of the model 6620 DT Geoprobe are shown in the Geoprobe manual and in Appendix A.

Soil samples are collected with the Geoprobe designed MC5 soil sampling system. This system consists of a cutting shoe, core catcher, closed piston point, light weight rod, MC5 liner, MC5 drive cap, drive head and a MC5 thread-less drive cap. The macro core is pushed and hammered to a specified depth collecting a sample within the core liner which is retained by the core catcher at the bottom of the core liner. Upon retrieval, the core liner is removed from the MC5 sampler assembly by removing the cutting shoe and then simply sliding out the core liner. In some instances the core may become lodged within the macro core assembly at which the core liner extruder will be used to force the core liner out. The core liner is then placed on the Geoprobe cutting bar and the Geoprobe cutting tool is then used to extract the entire top portion revealing the sample. The sample is then logged, screened and collected.

Soil gas samples are collected in one of two ways. One method involves installing a Geoprobe soil gas implant to a desired depth and evacuating a sufficient volume of air before sampling. The sample will then be collected through Teflon tubing by way of a soil gas box and a sampling pump (e.g., SKC) into a Tedlar bag or directly into a SUMMA canister. The other method involves collecting a sample through tubing attached to an adaptor at the bottom probe section at the desired depth. The sample will then be collected through Teflon tubing by way of a soil gas box and sampling pump into a Tedlar bag or directly into a SUMMA canister.

Groundwater samples are collected in various ways. One common method is to advance the probe rods to the desired depth, then insert a combination of polyvinyl chloride (PVC) screen and riser inside the probe rods to down to the specified depth. The length of screen and riser should be equal to length of probe rods used. An expendable point sits at the bottom of the probe rods. When the probe rods are retrieved the expendable point, attached to the screen, remains at depth allowing the screen/riser to remain in place while the probe rods are removed. Sand is then poured into the annular space outside of the PVC screen to approximately two feet above the screen. Bentonite is then poured in, filling the remainder of the annular space, to ground surface. In some instances, a grout machine is used to administer the bentonite mixture to complete the well.

Another common sampling method utilizes the Geoprobe SP-16 sampler for discrete sampling or temporary well point installation. This set up requires an expendable point, sampling sheath, inner screen (either PVC or stainless steel), drive head and a drive cap. Once the SP-16 is advanced to the desired depth, the probe rods are retracted approximately 30 inches to deploy the screen into the groundwater. A series of small-diameter-inner rods are then used to ensure the screen has in fact deployed. For both methods a peristaltic pump, bladder pump or check valve is then used to purge a calculated volume of water as per sampling protocols. Once this is achieved, a sample will be collected.

3.0 SAMPLE PRESERVATION, CONTAINERS, HANDLING AND STORAGE

The volume of sample to be collected, the proper container type (i.e., glass, plastic), chemical preservation and storage requirements are determined by the matrix being sampled and the parameter(s) of interest. This is discussed in Scientific Engineering Response & Analytical Contract (SERAS) SOP # 2003, *Sample Storage, Preservation and Handling* for the soil and water matrices. Guidelines for the containment, preservation, handling, and storage of soil gas samples are described in SERAS SOP # 2042, *Soil Gas Sampling*.

Applicable SERAS SOPs include SOP # 2012 - *Soil Sampling,* SOP # 2007 - *Groundwater Well Sampling,* SOP # 2042 - *Soil Gas Sampling* and SOP #2048 - *Monitoring Well Installation.*

4.0 INTERFERENCES AND POTENTIAL PROBLEMS

A preliminary site survey should identify areas to be avoided with the Geoprobe. Always have the locations containing buried utilities cleared by the state-certified clearing service. When operating on private property it may also be necessary to employ a utility locating contractor to identify on-site buried utilities.

Decontamination of all Geoprobe tooling (i.e. probe rods, macro cores, cutting shoes, etc.) that comes into contact with the soil is necessary to prevent cross-contamination of samples.

Obtaining a sufficient volume of soil for multiple analyses from one sample location or a discrete depth may present a problem. In some instances a limited volume of soil is recovered. Since it is not possible to re-enter the same hole and collect additional soil from the same depth interval an adjacent borehole in a new hole must be drilled to collect the additional sample. When multiple analyses are to be performed on soil samples collected with the Geoprobe the relative importance of the analyses should be identified. This ensures that the limited sample volume will be used for the most crucial analyses.

5.0 EQUIPMENT/APPARATUS

UNCONTROLLED COPY

Listed below is the sampling equipment used in conjunction with the Geoprobe.

- Threaded probe rods (60-inch, 48-inch and 36-inch)
- Drive caps
- Pull caps
- Probe drive rod
- Core liner extruder
- Expendable point holders
- Expendable drive points
- Solid drive points
- Extension rods
- Extension rod couplers
- Extension rod handle
- Rod pull bar
- Macro core barrels
- Carbide-tipped drill bit
- Well mini-bailer
- Check valve
- Teflon tubing
- Gas sampling adaptor and cap
- Teflon tape
- Neoprene O - rings
- Core liners
- Vinyl end caps
- Sample extruder
- Wire brush
- Brush adapters
- Cleaning brushes
- Frost augers
- Well installation equipment
- PVC screen and riser
- Pipe wrenches
- Silica sand
- Bentonite pellets
- Macro core wrench
- Dual tube system
- Hollow stem augers
- Concrete core drill
- Grout Machine
- Drive heads
- Cutting shoes
- Bladder pump

UNCONTROLLED COPY

UNCONTROLLED COPY

6.0 REAGENTS

Reagents required for sample preservation are specified in Table 1, Appendix A, of the SERAS SOP # 2003, *Sample Storage, Preservation and Handling*. Decontamination solutions are specified in the SERAS SOP # 2006, *Sampling Equipment Decontamination*.

7.0 PROCEDURES

Portions of the following sections have been condensed from the Model 6620DT *Geoprobe® Owner's Manual*. Refer to this manual for more detailed information concerning equipment specifications, general maintenance, tools, throttle control, clutch pump, 6620DT hammer, and trouble-shooting. A controlled copy of this manual is maintained with the Geoprobe and is on file in the Quality Assurance (QA) office.

Warning: Only trained individuals are authorized to operate the Geoprobe equipment. Never operate the equipment without proper training and the proper safety equipment.

7.1 Preparation

1. Determine the extent of the sampling effort, sample matrices, types, volume required and equipment and supplies required to complete the task.

2. Obtain and organize the necessary sampling and monitoring equipment.

3. Perform a general site survey prior to site entry in accordance with the site-specific Health and Safety Plan (HASP).

4. Use stakes or flagging to identify all sampling locations. All sample locations must be cleared of utilities prior to sampling.

7.2 Geoprobe Setup

1. Using the remote control, guide the Geoprobe to the probing location and then turn the machine off and place the remote control back on the holder.

2. Start the Geoprobe from the ignition utilizing the key and position the probe foot on the target and lower the foot to the ground surface.

3. Lower the outriggers to the ground surface to stabilize the Geoprobe.

4. Raise the winch derrick while lowering the winch cable simultaneously until fully raised.

5. Raise the Geoprobe hammer until it is fully retracted.

6. Assemble and position probe rods and other necessary tooling underneath the hammer and begin probing.

OPERATION OF THE MODEL 6620 DT GEOPROBE

Important: Check for overhead clearance when moving or operating the Geoprobe. with the winch derrick in the fully retracted position. Maintain a 10-foot distance (minimum) from overhead electrical wires.

Important: The Geoprobe should be operated in a level, as possible, position utilizing the downriggers.

7.3 Drilling Through Surface Pavement or Concrete

1. Position the Geoprobe over the drilling location.
2. Adjust the Geoprobe to the exact location using the foot up/down, fold, in/out and radius shift controls.
3. Remove the hammer anvil and retaining ring and insert the carbide-tipped drill bit into hammer securing with the attached retainer ring.
4. Lower the bit onto the ground surface and hammer penetrating the pavement by several inches.
5. With the bit now into the pavement hammer and rotate the bit by pushing the lever to the left and down until the entire section of pavement has been breached.
6. The bit is now retracted and removed from the Geoprobe.
7. Re-install the hammer anvil and retainer ring for normal Geoprobe drilling operations.

Important: Be sure to re-install the anvil and retainer ring before probing as damage to the hammer may result.

7.4 Probing

1. Position the Geoprobe over the drilling location.
2. Adjust the Geoprobe to the exact location using the foot up/down, fold, in/out and radius shift.
3. Lower the outriggers to the ground surface until the Geoprobe is sufficiently stable.
4. Raise the winch derrick while lowering the winch cable simultaneously until fully raised.
5. Raise the Geoprobe hammering mechanism until fully retracted.
6. Assemble and position probe rods and other necessary tooling underneath the hammer and begin probing.

UNCONTROLLED COPY

Important: Positioning the first probe rod vertically is critical to maintaining the vertical alignment of the borehole. Therefore, both the probe rod and the probe cylinder shaft must be in a true vertical position.

Important: When advancing rods, always keep the probe rods parallel to the probe cylinder shaft. This is done by making minor adjustments with the fold control. Failure to keep probe rods parallel to the probe cylinder shaft will result in increased difficulty in achieving the desired sampling depth and possibly damaging the drive rods or probe hammering mechanism.

7.5 Probing - Adding Rods

1. Standard probe rods vary in length (i.e. 3 foot (ft), 4ft and 5 ft). If the desired depth is more than the rod length, another rod must be threaded onto the rod that has been driven into the ground.

2. Fully extend the hammering mechanism.

3. Remove the drive cap and thread an additional drive rod.

4. Continue this process as mentioned above until the desired depth is reached.

7.6 Probing - Pulling Rods

1. Once the drive rods have been driven to depth, the probe rods can be extracted using the Geoprobe.

2. Fully lower the hammering mechanism.

3. Remove the drive cap and attach a pull cap or pull bar depending on the drive rods used.

4. Attach the latch on the hammering mechanism or pull bar and extract the rods by raising the probe.

5. Once the probe is fully extended attached a pipe wrench to the bottom most portion of the rod then remove the latch or pull bar and unthread the drive rod.

   Important: If the latch will not close over the pull cap, adjust the derrick assembly by using the extend control. This will allow you to center the pull cap directly below the hammer latch.

6. Repeat this process until all rods are extracted.

7. Decontaminate all portions of the equipment that have been in contact with the soil, soil gas or groundwater.

UNCONTROLLED COPY

7.7 Soil Gas Sampling - Implant installation

1. Attach the sampling implant to the anchor.
2. Feed the Teflon tubing through the probe rod and attach to the implant.
3. Install the drive cap and advance the rod assembly down to the desired depth.
4. Once at depth retract all rods leaving the implant at the desired depth.
5. Pour glass beads down the probe hole to achieve the desired thickness and then fill the remaining annular space with bentonite pellets.

7.8 Soil Gas Sampling – Post Run Tubing (PRT) retractable point holder

1. Attach the PRT retractable point holder to the probe rod and install the drive cap.
2. Drive the probe rod assembly to the desired depth and retract the rod approximately six inches to reveal the PRT screen.
3. Position the Geoprobe® to allow enough room to work.
4. Secure the post run tubing (PRT) adapter with an "O"-ring to the selected tubing.
5. Insert the adapter end of the tubing down the inside diameter of the probe rods.
6. Feed the tubing down the hole until it hits bottom on the expendable point holder. Cut the tubing approximately two feet above the top probe rod.
7. Grasp excess tubing and apply some downward pressure while turning it in a counter-clockwise motion to engage the adapter threads with the point holder.
8. Pull up lightly on the tubing to test engagement of threads.
9. Follow SERAS SOP # 2042 – *Soil Gas Sampling* to collect a soil gas sample.
10. After collecting a sample, disconnect the tubing from the sampling system.
11. Pull up firmly on the tubing until it releases from the adapter at the bottom of the hole.
12. Extract the probe rod assembly (outlined in Section 7.6).
13. Inspect the "O"-ring at the base of the adapter to verify that proper sealing was achieved during sampling. The "O"-ring should be compressed.

UNCONTROLLED COPY

Note: If the "O"-ring is not compressed, vapors from within the probe sections may have been collected rather than vapors from the intended sample interval.

7.9 Soil Sampling – MC5 System

1. Follow procedures outlined in Sections 7.1 through 7.6.

2. Assemble the MC5 sampler:

   - Place a piston point into the cutting shoe.
   - Attach a core catcher to the core liner.
   - Insert the inner drive rod into the core liner and through the core catcher.
   - Attach the cutting shoe to the core catcher.
   - Insert the core liner with all the components listed above and thread into the MC5 barrel.
   - Thread the drive head into the opposite end of the MC5 barrel.
   - Insert the inner drive rod drive cap.
   - Place the thread-less drive cap onto the drive head.

4. Drive the MC5 sampler down adding as many additional outer drive rods as necessary to reach 48 – 60 inches (depending on MC5 barrel length) above the target depth.

5. Move the Geoprobe back from the coring location to a sufficient distance so the inner rods may be removed.

6. Remove the thread-less drive cap and lower the probe hammer down to ground surface.

7. Attach the rod pull bar to the probe hammer and secure it to the MC5 barrel or drive rod.

8. Remove the inner rod drive cap and thread an additional section of inner drive rod onto the inner drive rods in the coring hole.

9. Extract all inner rods by manually pulling or using the Geoprobe® winch to assist.

10. Reposition the Geoprobe® over the MC5/Drive Rod and replace the drive cap.

11. Drive 48 – 60 inches (depending on MC5 barrel length).

12. Retract all rods and unthread the MC5 barrel and remove the core liner containing the sample.

13. Repeat process until desired depth and sampling intervals are completed.

Important: Documentation of sample location should include both surface and subsurface identifiers. Example: Sample Location S-6, 12.0' - 13.0' and top/bottom of core.

UNCONTROLLED COPY

14. If the sample core is not easily removed then insert the MC5 barrel into the extruder
.
15. Thread the MC5 barrel onto the extruder and operate the controls to extrude the sample core liner.

7.10 Groundwater Sampling – SP16 System

1. Follow Sections 7.1 thorough 7.6 with the following exception: insert a SP16 well screen (PVC or Stainless Steel) into the sampling sheath and install an expendable point into the bottom portion of the sheath.

2. Thread a drive head onto the sampling sheath and position under the probe hammer.

3. Place a thread-less drive cap onto the drive head and advance the tooling, adding as many drive rods as necessary to achieve the desired depth.

4. Position the Geoprobe® and insert the stop pin set up rods down through the drive rods to the bottom most portion into the sampling sheath itself.

5. While keeping slight pressure on the stop pin inner rods, begin extract the rods 30 inches verifying that the screen is in fact deploying.

6. With the screen deployed Groundwater samples may be collected by inserting Teflon tubing down to the screen section and pumping to the surface. Refer to *SERAS SOP #2043, Water Level Measurement* for determining the water level.

7. With the water sampling completed, extract all rods as listed in section 7.7.

Important: Documentation of sample location should include both surface and subsurface identifiers.

7.11 Installation of Geoprobe® Monitor Wells

1. Position the Geoprobe foot over the well point.

2. Fully raise the mast assembly and hammering mechanism, making room for the tooling beneath the hammer.

3. Assemble the expendable point holder, expendable point and a thread-less drive cap.

4. Position the assembly under the hammer, and lower the hammer down onto the drive cap. Lower the hammer until the foot comes off the ground approximately six inches.

5. Hammer the rod assembly into the ground until the foot touches the ground. Repeat this process until the rod is driven into the ground.

UNCONTROLLED COPY

6. Raise the hammer, remove the driver cap and add a drive rod to the assembly. Install the cap and drive the rod. Repeat this process until you reach the desired well depth.

7. Assemble a bottom plug, screen (pre-pack or slotted PVC) and PVC riser. The entire assembly must be approximately two feet longer than the well is deep so enough PVC riser remains above the surface for sampling.

8. Remove the drive cap and slide the well assembly down the drive rods with medium force.

9. To remove the rods, position the hammer rod pull system support bracket up against the rod. Install the rod puller handle. Raise the hammer slowly making sure the well remains at depth, as the rod is lifted out.

10. Repeat this process until all the drive rods are removed.

11. Use desired sand to pack the annular space and bentonite to cap the sand pack and seal the well.

7.12 Hollow Stem Auger Attachment

1. Position the Geoprobe with the outriggers down and swing the auger head out until in the locked position and attach the auger drive head securing with the supplied pin.

2. Use the main control panel to raise the auger up/down and for auger rotation.

3. Insert a wooden or plastic plug into the bottom end of the auger and position the auger underneath the rotation assembly.

4. Attach the auger to the drive head and begin advancing. Once the auger flight has been fully installed disconnect the auger drive head and fully raise the probe and load another auger.

5. While rotating and advancing the auger, cuttings will be dispensed and need to be cleared away with a shovel.

6. Once the auger flight has been fully installed disconnect the auger drive head and fully raise the probe and load another auger.

7. Repeat these steps until the desired depth has been reached.

Important: Outriggers must be deployed prior to auger operation.

8.0 CALCULATIONS

This section is not applicable to this SOP.

UNCONTROLLED COPY

UNCONTROLLED COPY

9.0 QUALITY ASSURANCE/QUALITY CONTROL

Specific QA/QC activities that apply to the implementation of these procedures will be listed in the Quality Assurance Project Plan prepared for the applicable sampling event. The following general QA procedures will also apply:

1. All sample collection data, including sample collection methods, times of collection, analyses required and decontamination procedures must be documented in site logbooks.

2. All instrumentation must be operated in accordance with operating instructions as supplied by the manufacturer or instrument-specific SOPs, unless otherwise specified in the QAPP. Equipment check-out is necessary prior to sampling and must be done according to the instruction manuals supplied by the manufacturer. Equipment must be operated by trained personnel.

3. The collection of rinsate (equipment, field) blanks is recommended to evaluate the potential for cross-contamination from non-dedicated sampling equipment. The determination of how many field (rinsate, equipment) blanks to be collected is dependent on the project's data quality objectives.

10.0 DATA VALIDATION

Data verification (completeness checks) must be conducted to ensure that all data inputs are present for ensuring the availability of sufficient information. This may include but is not limited to: location information, depth measurements and core intervals. These data are essential to providing an accurate and complete final deliverable. The SERAS Task Leader (TL) is responsible for completing the UFP-QAPP verification checklist for each project.

11.0 HEALTH AND SAFETY

When working with potentially hazardous materials, follow U.S. EPA, Occupational Safety and Health Administration (OSHA), and the SERAS site-specific HASPs. The following is a list of health and safety precautions which specifically apply to Geoprobe operation.

1. If the vehicle is parked on a loose or soft surface, do not fully raise the rear of vehicle with the probe foot, as the vehicle may fall or move.

2. The Operator is required to wear ANSI Z41 or ASTM F2413-11 approved steel shank and steel or composite boots (6-inches or higher) and keep feet clear of the probe foot.

3. The Operator is required to wear an American National Standards Institute (ANSI) Z89.1 approved Type I hard hat with Class G or E electrical protection.

4. Only one person operates the Geoprobe® with a helper assembling or disassembling probe rods and accessories.

5. Never place hands on top of a rod while it is under the machine.

6. The Operator must stand on the control side of the probe machine, clear of the probe foot and mast, while operating the controls.

7. ANSI Z87.1 approved safety glasses with side shields are required at all times.

8. Never continue to exert downward pressure on the probe rods when the probe foot has risen six inches off the ground.

9. Never exert enough downward pressure on a probe rod so as to lift the treads of the unit off the ground.

10. Always remove all tooling from the machine before folding the machine to the horizontal position.

11. Based on SERAS sound level measurements at the Geoprobe operator and helper positions of 104 decibels on the A scale (dBA) to 112 dBA, Geoprobe operators and helpers are required to wear hearing protection (i.e., ear plugs, ear muffs). Since the USEPA full Noise Reduction Ratio (NRR) on HPDs is not realized, Geoprobe operators and helpers often require ear muffs and ear plugs together to reduce noise exposure to less than 85 dBA as required by Section 3 of the SERAS SOP 3007, *Hearing Conservation Program.*

12. Locations of above and/or below ground utilities and services must be known before starting to drill or probe. The local/state utility companies are to be notified to mark out the areas in and around the proposed drilling locations. In addition, it may be necessary for private utility mark out to be completed before any intrusive work begins.

13. Shut down the hydraulic system and stop the vehicle engine before attempting to clean or service the equipment.

14. A dry chemical fire extinguisher (Type ABC) must be kept with the vehicle at <u>all</u> times.

12.0 REFERENCES

Geoprobe® Systems. 2005. *Geoprobe® Model 6620DT Direct Push Machine Owner's Manual.*

Geoprobe® Systems. 2009. *Tools Catalog*.

SERAS SOP 3007, *Hearing Conservation Program*, May 21, 2014.

13.0 APPENDIX

A - Figures

UNCONTROLLED COPY

APPENDIX A
Figures
SOP #2050
June 2015

UNCONTROLLED COPY

OPERATION OF THE MODEL 6620 DT GEOPROBE

FIGURE 1. Geoprobe 6620DT

UNCONTROLLED COPY

FIGURE 2. MC 5 Sampling System

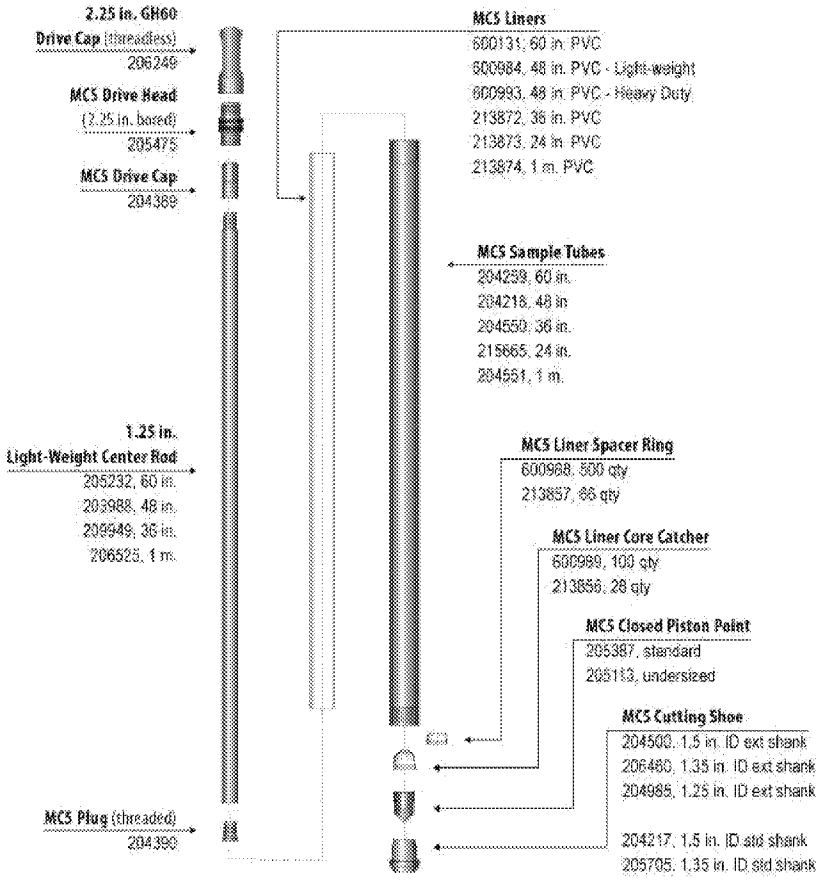

UNCONTROLLED COPY

FIGURE 3. Soil Gas Sampling System

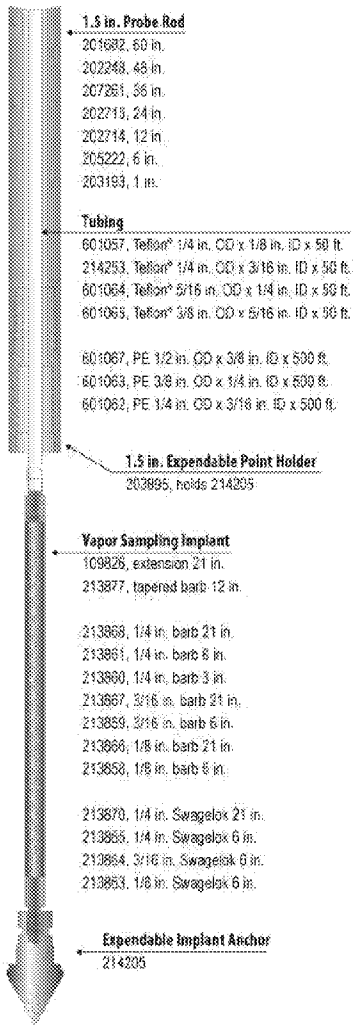

UNCONTROLLED COPY

FIGURE 4. Concrete/Pavement Breaker System

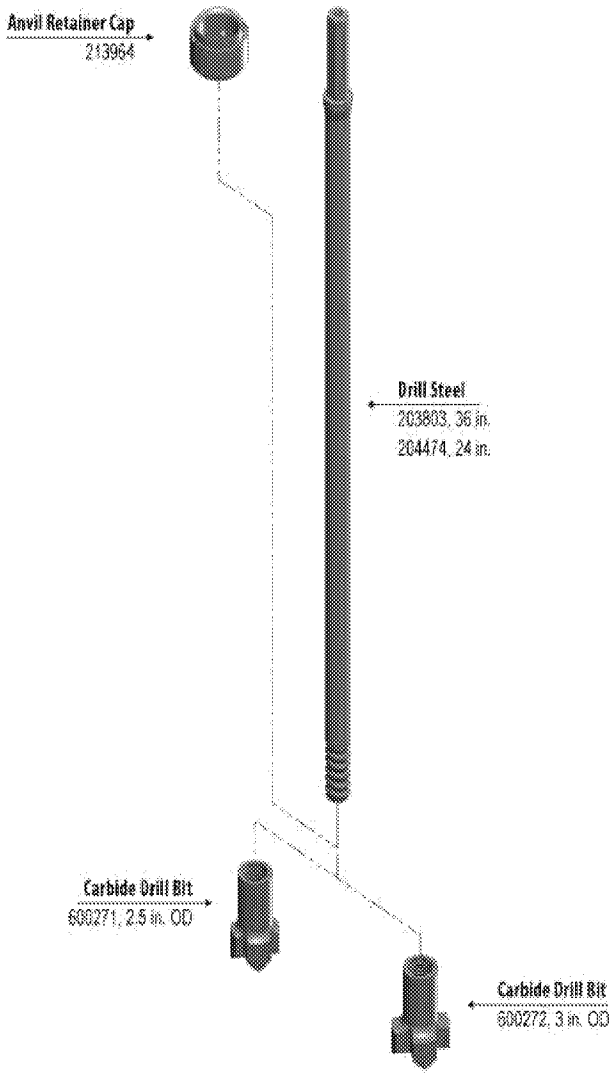

UNCONTROLLED COPY

COPY

FIGURE 5. SP 16 Groundwater Sampling System

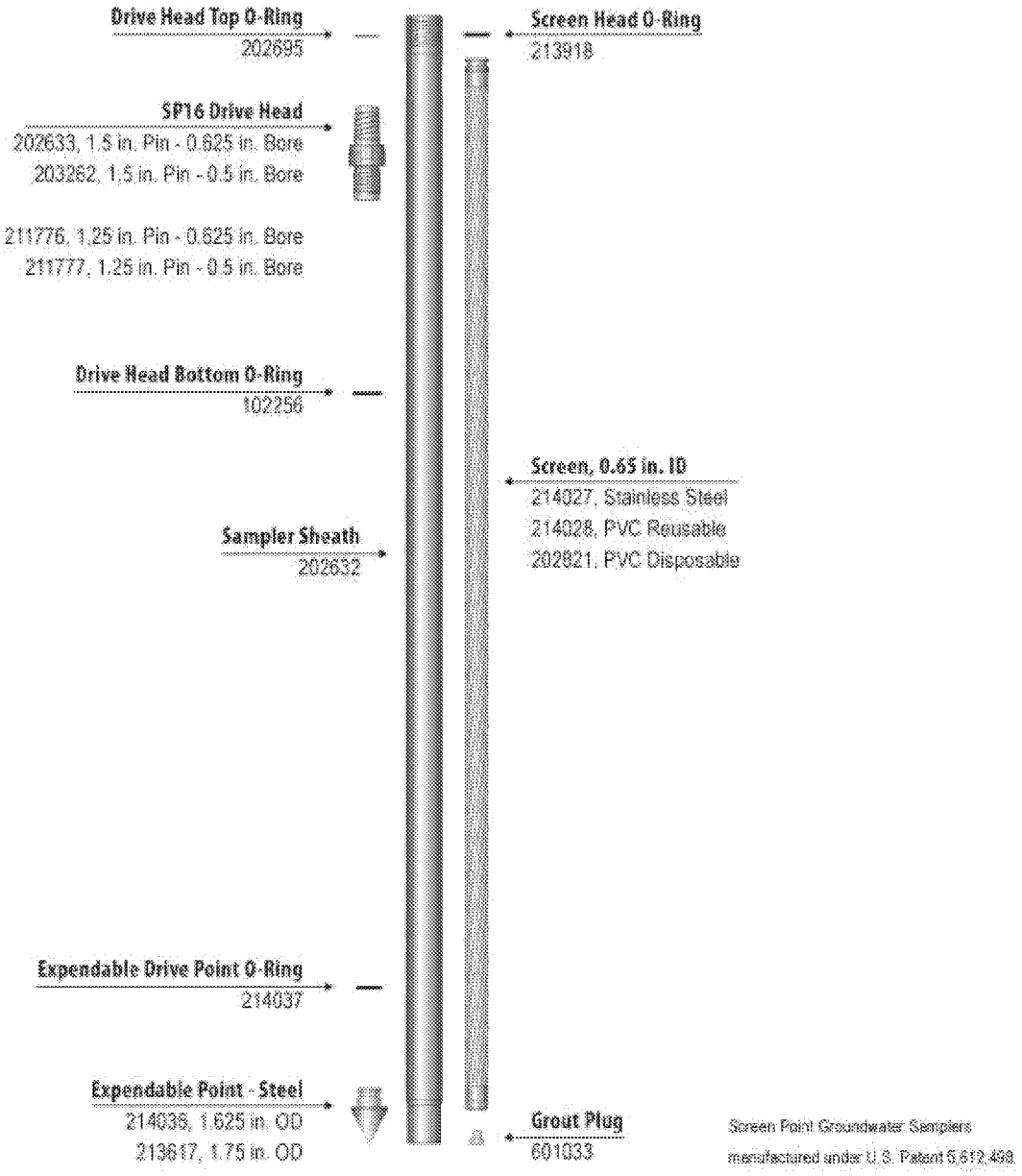

FIGURE 6. Monitoring Well Installation Exploded View

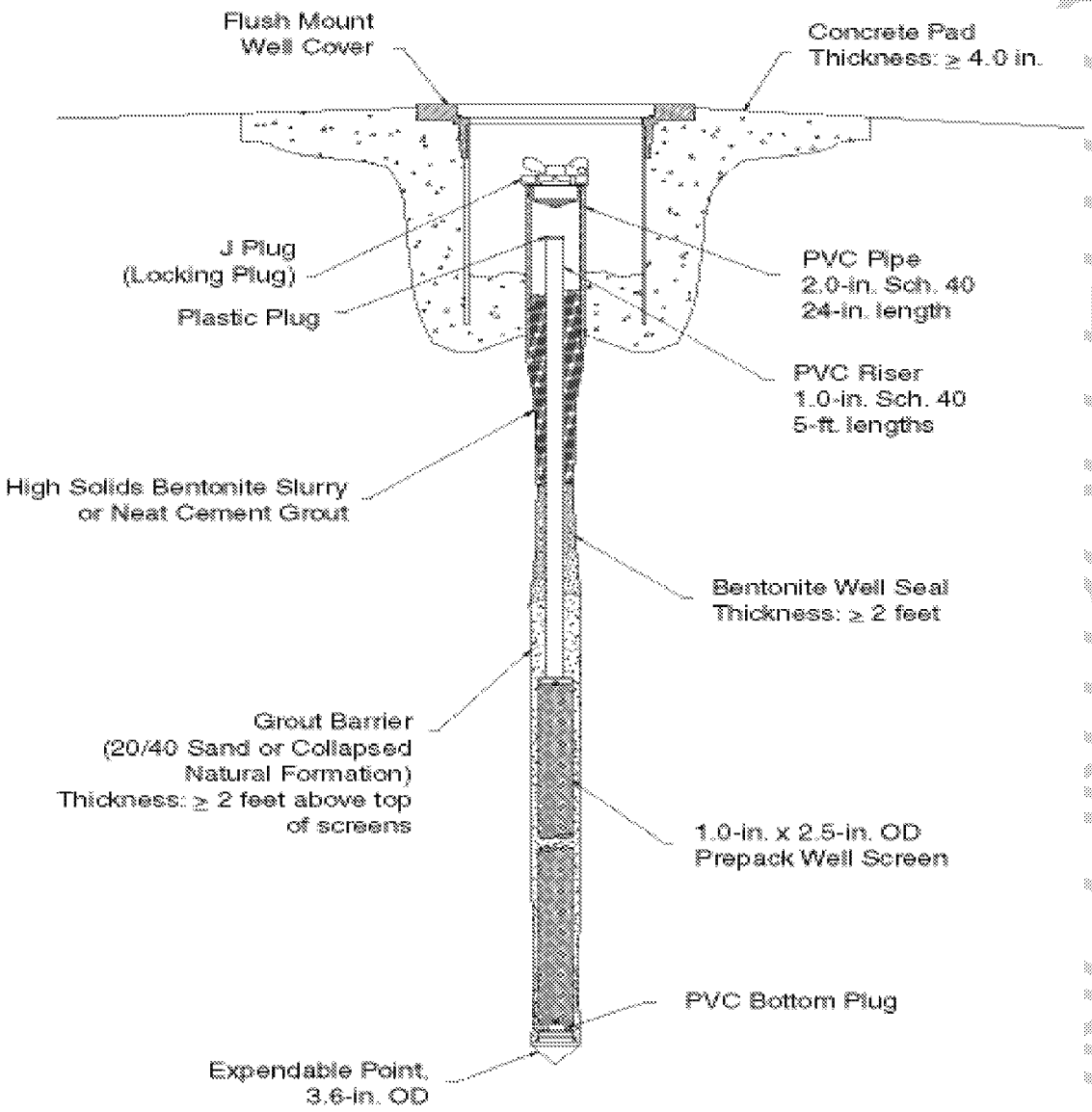

UNCONTROLLED COPY

FIGURE 7. Hollow Stem Auger System

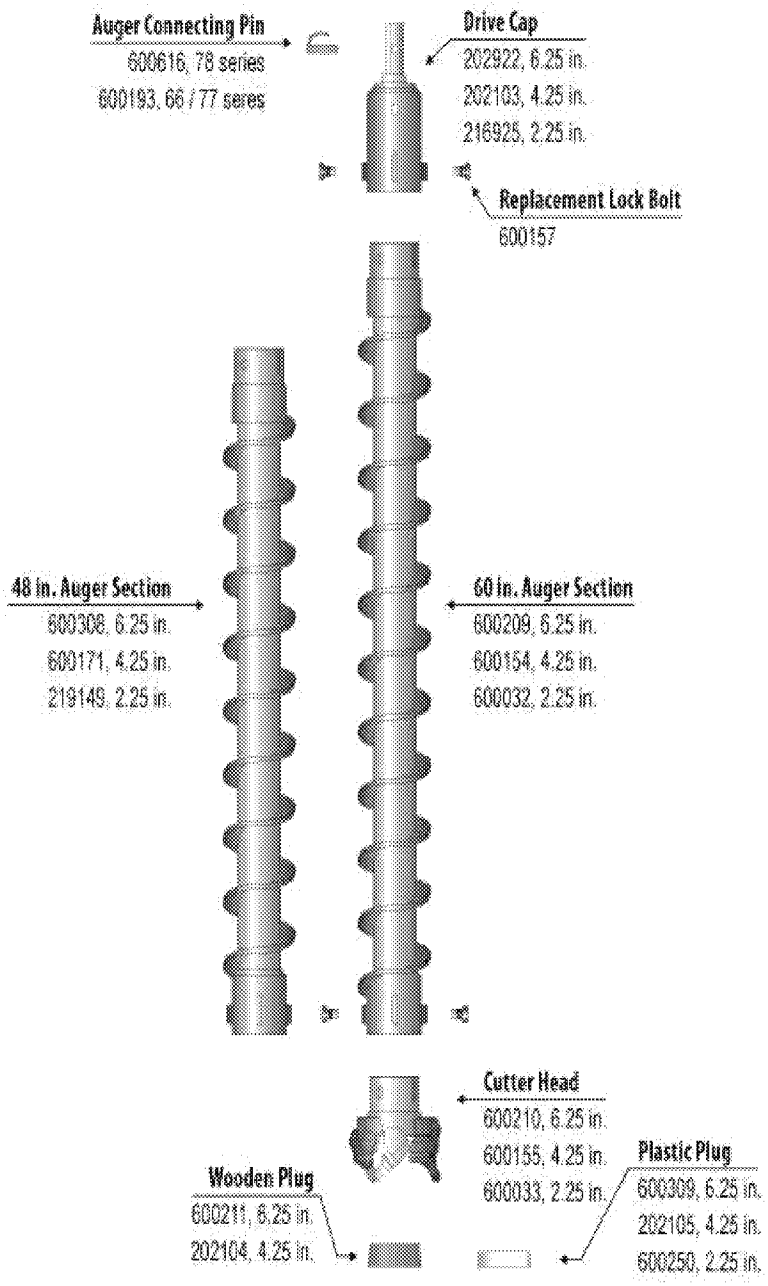

UNCONTROLLED COPY

Protocol for Conducting Radon and Radon Decay Product Measurements In Multifamily Buildings

For Residence Managers and Measurement Professionals

Designation: ANSI/AARST MAMF 2012

Replication with no change from ANSI/AARST MAMF 2010

An American National Standard

SCOPE:

This standard specifies procedures, minimum requirements and general guidance for measurement of radon and radon decay product concentrations in Multifamily buildings comprised of more than three attached dwellings.

THIS DOCUMENT INCLUDES:

1) **Introduction to Radon.**
2) **Introductory Guidance for Residence Managers.**
3) **Protocol for Conducting Radon and Radon Decay Product Measurements in Multifamily Buildings.**

   Specific testing protocols that include instructions on where to test, strategies for conducting reliable tests, reporting and associated quality control measures.

Significance of Use:

This document contains protocols and guidance designed to respond to the health threat of radon in dwellings in Multifamily buildings.

Radon has been determined to be the leading cause of lung cancer among nonsmokers in the United States. It is believed that most people receive their greatest exposure to radon in their home or dwelling. The U.S. EPA and the Surgeon General state that "Indoor radon is the second-leading cause of lung cancer [after cigarette smoking] in the United States and breathing it over prolonged periods can present a significant health risk to families all over the country." *(Health Advisory, January 13, 2005)*

The purpose of conducting radon measurements is to identify locations that have elevated radon concentrations and to determine if radon mitigation is necessary in order to protect current or future occupants. The purpose of test protocols is to help achieve reliable radon measurements. This standard addresses the needs of citizens, radon measurement professionals, property owners, residence/facility managers, consultants, manufacturers and regulators concerned with radon measurements in Multifamily buildings.

Introduction

History: The United States Environmental Protection Agency (EPA) developed measurement guidelines in the *Home Buyer's and Seller's Guide to Radon* and the *Citizen's Guide to Radon.* For the current versions see: http://www.epa.gov/radon/pubs. These measurement strategies assess radon concentrations in homes for the purpose of determining the need for remedial action. Guidelines or protocols also appear in the EPA documents "Indoor Radon and Radon Decay Product Measurement Device Protocols" and "Protocols for Radon and Radon Decay Product Measurements in Homes. The protocols and guidance herein include the best practices from those documents, additional technical descriptions of requirements and recommendations, and guidelines for the interpretation of measurement results.

The Stewart McKinney Amendments to the 1988 Indoor Radon Abatement Act require U.S. Housing and Urban Development (HUD) to develop an effective departmental policy for dealing with radon contamination using available guidelines and standards to ensure that occupants of housing subsidized by HUD are not exposed to hazardous concentrations of radon. At the request of Congress, the document "Radon Measurement in HUD Multifamily Buildings" was developed to enable HUD to comply with the requirements of the legislation. The document was completed during 1995 by the EPA for HUD under interagency agreement. The American Association of Radon Scientists and Technologists document "AARST Interim Protocols for Conducting Radon Measurements in Multifamily Buildings (MAMF October, 2004)" built on that document and added consortium review and revision. The document herein reflects a significant degree of continued review and amendment.

Applicability and use of this document: If the minimum requirements of this document exceed local, state, or federal requirements for the locale in which the radon test is conducted, then this document's minimum requirements should be followed. This document is intended to aid

Limited License, CRCPD National Radon Training Meeting, September 28, 2014, Not for Reprint or Resale.

ED_006395_00002031-00129

multifamily building owners/managers and staff, residents, owners of individual dwellings, radon measurement professionals, state radiation control programs or anyone involved in the measurement of radon in Multifamily buildings to assess the need for mitigation and to provide radon risk information for the benefit of occupants. These guidelines can be adopted as part of a state program or can be provided as recommendations by states to testing companies and interested individuals. AARST recommends that any authority or jurisdiction that is considering substantial modifications of this document as a condition of its use seek consensus within the consortium process at AARST Consortium on National Radon Standards prior to adopting a modified version. This provides the jurisdiction with a higher degree of expertise and an opportunity for the Consortium on National Radon Standards to update its document if appropriate.

Keywords:

Radon Gas, Radon Test, Multifamily, Radon Measurement, Radon Testing, Radon, Multifamily Housing

Normative References:

- EPA Guidance on Quality Assurance (402-R-95-012, October 1997)
- Indoor Radon and Radon Decay Product Measurement Device Protocols (EPA 402-R-92-004, July 1992)

For the latest versions of USEPA documents see:
http://www.epa.gov/radon/pubs

Referenced Publications:

- A Citizen's Guide To Radon (EPA 402/K-09/001, January 2009)
- Home Buyers and Sellers Guide to Radon (EPA 402/K-09/-002, January 2009)

For the latest versions of USEPA documents see:
http://www.epa.gov/radon/pubs

- Protocols For Radon Measurements In Homes (AARST MAH September 2005)

For the latest versions of AARST documents see:
http://www.aarst.org

Metric Conversions

Conversions from English-American measurement units to the International System of Units (SI) are rendered herein with literal conversion. The conversions are not always provided in informational text or tables. It is acknowledged that rounding off to a similar numeric conversion is common (i.e. 4.0 pCi/L rounded to 150 Bq/m^3 rather than literal conversion to 148 Bq/m^3) for locations where the International System of Units (SI) are used in standard practice. Conversions should apply as commonly used in such locations or jurisdictions.

Consensus Process

The consortium consensus processes developed for the AARST Consortium on National Radon Standards and as accredited to meet essential requirements for American National Standards by the American National Standards Institute (ANSI) have been applied throughout the process of approving this document. This Standard is to be reviewed and updated every five years at a minimum.

Notice regarding unresolved objections: While each committee seeks to resolve objections, please notify the committee responsible for an action or inaction if you desire to re-circulate any unresolved objections to the committee for further consideration. **Notice of right to appeal.** (See Bylaws for the AARST Consortium on National Radon Standards - Operating Procedures for Appeals available at www.radonstandards.us, Standards Forum, Bylaws): (2.1) Persons or representatives who have materially affected interests and who have been or will be adversely affected by any substantive or procedural action or inaction by AARST Consortium on National Radon Standards committee(s), committee participant(s), or AARST have the right to appeal; (3.1) Appeals shall first be directed to the committee responsible for the action or inaction.

Contact information:
AARST Consortium on National Radon Standards.
Email: standards@aarst.org
Efax: 913-780-2090
Website: www.radonstandards.us
P.O. Box 2109, Fletcher, North Carolina 28732

Disclaimer: *The AARST Consortium on National Radon Standards strives to provide accurate, complete, and useful information. The AARST Consortium on National Radon Standards will make every effort to correct errors brought to its attention. However, neither the AARST Consortium on National Radon Standards, its sponsoring organization the American Association of Radon Scientists and Technologists nor any person contributing to the preparation of this document makes any warranty, express or implied, with respect to the usefulness or effectiveness of any information, method, or process disclosed in this material. Nor does AARST or the AARST Consortium on National Radon Standards assume any liability for the use of, or for damages arising from the use of any information, method, or process disclosed in this document. Mention of firms, trade names, or commercial products in this document does not constitute endorsement or recommendation for use. It is the sole responsibility of radon practitioners using this standard to stay current with changes to the standard and to comply with local, state and federal codes and laws relating to their practice.*

Limited License, CRCPD National Radon Training Meeting, September 28, 2014, Not for Reprint or Resale.

ED_006395_00002031-00130

TABLE OF CONTENTS

SECTION	DESCRIPTION	PAGE
Introduction	Scope, Significance of Use, Introduction, Applicability	i
	Keywords, Reference Publications, Consensus Process	ii
SECTION I (informational):	**INTRODUCTION TO RADON**	
A.	Radon Facts	1
B.	Radon Health Effects	1
C.	Radon Exposure	1
D.	Radon Entry into Buildings	1
E.	Contacts for Additional Information	2
SECTION II (informational):	**INTRODUCTORY GUIDANCE FOR RESIDENCE MANAGERS**	
A.	Introduction, Planning	1
B.	Communicating to Residents Prior to Testing	1
C.	Selecting Radon Service Contractors	1
D.	Role of Maintenance Personnel	2
E.	Documenting the Testing Program	2
F.	When to Test	2
G.	Retesting	2
H.	Actions Recommended Based Upon Test Results	3
I.	Mitigation	3
SECTION III:	**PROTOCOL FOR CONDUCTING RADON AND RADON DECAY PRODUCT MEASURMENTS IN MULTIFAMILY BUILDINGS**	
1.0	Purpose and Scope	1
2.0	Preparing for the Measurement	1
3.0	Where to Test	2
4.0	Testing Strategies	4
5.0	Quality Control	7
6.0	Conditions Required Before and During the Test	8
7.0	Special Considerations for Large Disagreement between Duplicate (or Collocated) Results	10
8.0	Documentation	10
FLOW CHARTS	Figure 1: Extended Testing Protocol Figure 2: Time-Sensitive Testing Protocol	12-13
Table 3.6	Heating, Cooling and Ventilation Systems	2
Table 4.1	Extended Testing Protocol	4
Table 4.2	Time-Sensitive Testing Protocol	5
Table 5.1	Quality Control: Duplicates and Blanks	7
Table 5.3	Special considerations for blank detectors in large deployments	7
	SUPPORTING INFORMATION	
APPENDIX A.	Descriptions of Measurement Devices and Quality Control Measures	
APPENDIX B.	Radon Decay Product Measurements	
APPENDIX C.	Definition of Terms	
APPENDIX D.	Checklist for Selecting a Service	
APPENDIX E.	Procedural Checklist for Testing	
Exhibit 1a, 1b, 1c,	Graphic examples:	Test Locations
Exhibit 1d, 1e,	Graphic examples:	Heating, Cooling and Ventilation Systems
Exhibit 2	Graphic example:	Floor plan drawing/Log
Exhibit 3	Sample form:	Chain-of-custody / Data log
Exhibit 4	Graphic example:	Data Entry: Chain-of-custody / Log
Exhibit 5	Sample form:	NOTICE OF INSPECTION
Exhibit 6	Sample form:	Test in progress – Compliance form
Exhibit 7	Sample form:	Test in progress – ONSITE/PUBLIC NOTICE
Exhibit 8	Sample form:	Notice of Inspection – Non-tested dwellings
Exhibit 9	Sample form:	Compliance Forms– Non-tested dwellings

Limited License, CRCPD National Radon Training Meeting, September 28, 2014, Not for Reprint or Resale.

Section I: Introduction to Radon

(This section is intended for informational purposes only. For radon testing protocol, see Section III).

A. Radon Facts

Radon is a naturally-occurring radioactive gas which is a part of the uranium-238 decay chain. The immediate parent of radon-222 is radium-226. Radon comes from the breakdown (radioactive decay) of uranium that is found in soil and rock all over the United States. Radon is a component of the air in soil that enters buildings through cracks and other pathways in the foundation. Eventually, it decays into radioactive particles (decay products) that can become trapped in your lungs when you inhale. As these particles decay in turn, they release small bursts of radiation. This radiation can damage lung tissue and lead to lung cancer over the course of your lifetime. EPA studies have found that radon concentrations in outdoor air average about 0.4 pCi/L (picocuries per liter) of air. However, radon and its decay products can reach much higher concentrations inside a building.

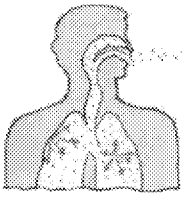

Radon gas is colorless, odorless, and tasteless. The only way to know whether elevated concentrations of radon are present in any building is to test.

B. Radon's Health Effects

Radon is a known human carcinogen. Prolonged exposure to elevated radon concentrations causes an increased risk of lung cancer. Like other environmental pollutants, there is some uncertainty about the magnitude of radon health risks. EPA calculates that radon may cause 21,000 lung cancer deaths in the U.S. each year. The U.S. Surgeon General has warned that radon is the leading cause of lung cancer deaths in non-smokers in the U.S. Only smoking causes more lung cancer deaths than radon.

Not everyone who breathes radon decay products will develop lung cancer. An individual's risk of getting lung cancer from radon depends mostly on three factors: the concentration of radon, the duration of exposure and the individual's smoking habits. In addition, some people are more susceptible to lung cancer than others.

Risk increases as an individual is exposed to higher concentrations of radon over a longer period of time. Smoking combined with radon is an especially serious health risk. The risk of dying from lung cancer caused by radon is much greater for smokers than it is for non-smokers.

C. Radon Exposure

Because many people spend much of their time at home, the home is likely to be the most significant source of radon exposure. According to EPA, nearly 1 out of every 15 homes in the United States is estimated to have radon concentrations that exceed the EPA action level.

Elevated concentrations of radon have been found in homes and buildings in every state. While elevated radon may be more common in some areas, any building can have a problem. EPA recommends that ALL buildings should be tested regardless of the area of the country and that maps should not be used to determine whether to test. More specific information on the likelihood of elevated radon in your area can frequently be found at your state or county radon offices.

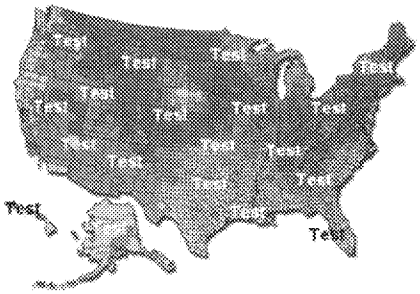

The concentration of radon in the air within a building should be reduced below **EPA's radon action level of 4 pCi/L.** Any radon exposure creates some risk; no concentration of radon is safe. Even radon concentrations below 4 pCi/L pose some risk, and the risk of lung cancer can be reduced by lowering indoor radon concentrations. This action level is based largely on the ability of current mitigation technologies to consistently reduce radon concentrations below 4 pCi/L. Depending on the building characteristics, radon concentrations in some buildings can be reduced well below 4 pCi/L. In others, reducing radon concentrations to below 4 pCi/L may be more difficult.

D. Radon Entry into Buildings

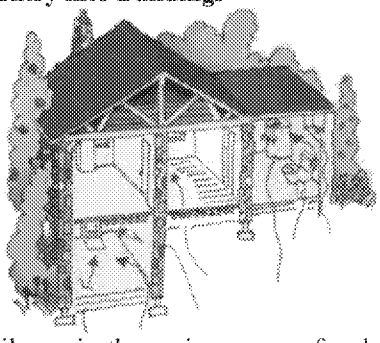

Radon in soil gas is the main source of radon problems. Pathways for radon to enter a building include cracks in the slabs and walls, the expansion joints between floor and walls, porous concrete block walls, open sump pits, crawlspaces and openings around utility penetrations. Some buildings have other pathways for radon to enter a building such as sub-slab utility tunnels and heating, ventilating and air conditioning (HVAC) ducts.

Radon gas may also enter buildings in well water. Radon from well water used in a building can off-gas and raise the concentrations. For dwellings or small communities serviced

Limited License, CRCPD National Radon Training Meeting, September 28, 2014, Not for Reprint or Resale.

by well water, a test of the water for radon should be considered especially if the building is vacant or there is no water use during the test in the dwellings. Radon in water testing is covered in a separate document and is beyond the scope of this testing protocol. For more information on radon in drinking water you can contact your state radon contact, your state drinking water program, EPA's Drinking Water Hotline (800) 426-4791, or visit http://www.epa.gov/safewater/radon.html.

Sometimes building materials that contain uranium and radium can produce radon. A radiation professional or your state radiation program can help you evaluate this possibility.

Factors Influencing Radon Entry
Many factors contribute to the entry of radon gas into buildings. As a result, residence managers cannot know without testing if elevated concentrations of radon are present in their building complex. The following factors determine why some buildings have elevated radon concentrations and others do not:

- The concentration of radon in the soil gas **(source strength);**
- The permeability of the soil or sub-surface geology **(gas mobility)** under the building;
- The **structure and construction** of a building; and,
- The type, design, operation, and maintenance of the heating, ventilating and air-conditioning **(HVAC)** system.

Source strength: The radon concentration in soil gas can vary greatly from building to building. It can even vary greatly under different parts of the same building.

Gas mobility: Certain geological features beneath a building, such as cracks, fissures, or solution cavities, can serve as a direct connection between the radon-producing minerals and the building's foundation. Such a direct connection can cause one unit of a building to have a radon concentration significantly higher than other units in the area. The permeability of the soil under a building, along with the differences between the air pressure inside a building and the air pressure under a building's foundation influence the rate at which radon enters a building. For example, if the air pressure in the building is greater than the air pressure under the building's foundation, radon should not enter through the openings of a building's foundation. If the air pressure in the building is less than the air pressure under the building's foundation, radon in the soil gas will enter through any openings in the building's foundation.

Structure and construction: Any building design can have a radon problem. Without testing, you cannot know if elevated concentrations of radon are present.

Heating, cooling and ventilation systems (HVAC): Depending on their design and operation, HVAC systems can influence radon concentrations in buildings:

- Fresh air ventilation serves to dilute indoor radon concentrations with outdoor air; however radon's source strength commonly overwhelms the practical limits of increasing ventilation to reduce occupant exposure.
- Poor ventilation provides less dilution to indoor radon concentrations.
- Depressurized buildings draw radon inside.
- Pressurizing a building helps keep radon out.

The frequency and thoroughness of HVAC maintenance can sometimes play an important role. For example, air intake filters that are not periodically cleaned and changed can significantly reduce the amount of outdoor air ventilating the indoor air environment. An understanding of the design, operation, and maintenance of a building's HVAC system and how it influences indoor air conditions is helpful for understanding and managing a radon problem, as well as many other indoor air quality concerns in buildings. However, since HVAC systems are only one of many factors that affect radon concentrations in a building, HVAC system modifications alone are often not an effective radon mitigation strategy.

E. Contacts for Additional Information

- EPA Website
  http://www.epa.gov/radon
- State radon offices:
  http://www.epa.gov/iaq/whereyoulive.html
- Indian Nation radon offices:
  http://www.epa.gov/epahome/tribal.htm
- Regional EPA offices:
  http://www.epa.gov/epahome/locate2.htm
- The National Radon Safety Board (NRSB) - Radon Proficiency Program: www.nrsb.org
- The NEHA (National Environmental Health Association) National Radon Proficiency Program: www.neha-nrpp.org

Limited License, CRCPD National Radon Training Meeting, September 28, 2014, Not for Reprint or Resale.

Informational Section

SECTION II: INTRODUCTORY GUIDANCE FOR RESIDENCE MANAGERS

(This section is intended for informational purposes only. For radon testing protocol, see Section III.)

***(For individuals testing a single dwelling, the following** subsections C, F, G, H and I provide helpful information.)*

A. Introduction

The purpose of testing is to identify locations that have elevated radon concentrations and to determine if radon mitigation is necessary to protect current or future occupants.

Planning

Planning to test your building for radon requires a basic understanding of the radon testing process and the steps that are necessary to ensure your radon test results are reliable. Specifically, to plan for radon testing, you will need to:

- Become familiar with testing methods and building conditions required to conduct reliable radon tests;
- Determine an appropriate and practical testing strategy (see Section III). Review logistics and estimate the number of detectors including detectors for quality assurance (QA) requirements to aid in evaluating costs and competitive bids from companies providing radon testing services;
- Investigate whether any residents have independently tested their dwelling for radon and collect any test results;
- Communicate information to your residents about your radon testing activities;
- Become familiar with guidance for when radon reduction is recommended.

A responsible and reliable plan for radon measurement requires technical knowledge, attention to detail, and planning. **You should use a radon measurement professional that is state licensed or nationally certified by NEHA-NRPP or NRSB if no state licensing program exists in the state where the measurements are conducted.** (See C below for information on finding a qualified contractor for your area.) A radon measurement professional can help assess the nature of your building complex and help you choose a responsible and reliable measurement plan.

(See Appendix E for a step-by-step checklist on planning and testing.)

B. Communicating with Residents Prior to Testing

It is important to notify and inform residents prior to testing about what to expect during the testing process. Plan to:

- Distribute an appropriate ***notice of inspection (for radon testing)*** at least two weeks in advance of testing and again a few days before the test that provides the likely placement and retrieval dates and required building conditions prior to and during the test. The notice should stress the importance of providing access to test locations and maintaining proper test conditions. Include advice that interfering with the test device or building conditions can invalidate the test results. It should also stress that the test is being conducted to help ensure the occupants' safety. Inform residents how they might get more information. (See Exhibits 5 through 9 for sample notification forms.)
- Inform residents that test devices are not dangerous in any way and that a sample test device is available if residents wish to see the device.
- Inform residents when test results might be available and that copies of EPA's current *A Citizen's Guide to Radon*, current comparable EPA documents or state-approved radon documents are available upon request to residents who want additional information on radon. For copies of these guides, contact your State Radon Office or access http://www.epa.gov/radon/whereyoulive.html.

C. Selecting Radon Service Contractors

Your goal is to select a contactor who will provide reliable services and techniques. When seeking radon services, request bids from radon measurement professionals who are state licensed (where applicable) or certified by either the National Radon Proficiency Program (NEHA-NRPP) or the National Radon Safety Board (NRSB) and who use approved devices.

Contact your State Radon Office for a list of licensed or certified contractors (http://www.epa.gov/radon/whereyoulive.html).

Listings for certified contractors can also be found at www.neha-nrpp.org or www.nrsb.org. (For more information on private radon proficiency programs, visit www.epa.gov/radon/proficiency.html).

State regulations will take precedence when they are more stringent.

Individuals placing and retrieving detectors should have an identification card or letter verifying their participation in State, NEHA-NRPP or NRSB Radon Proficiency Programs. Devices used for the measurements should also be approved by NEHA-NRPP or NRSB Radon Proficiency Programs.

D. Role of Maintenance Personnel

Because maintenance personnel frequently have knowledge of the building and the occupants, they can play a key role during the testing process, especially in

Limited License, CRCPD National Radon Training Meeting, September 28, 2014, Not for Reprint or Resale.

ED_006395_00002031-00134

planning and scheduling. By providing access to residences and supplying floor plans when available, the maintenance personnel can help the measurement service to quickly identify appropriate testing locations, and plan testing strategy within a building complex.

It is highly recommended that untrained personnel serve only in these support functions for trained and certified or licensed radon measurement professionals. In regulated states, all parties including unlicensed and untrained personnel must abide by state regulations.

E. Documenting the Testing Program

A record of the testing program should be maintained by the client for future reference. This record should contain the following information:

- A copy of the final report submitted by the measurement service that conducted the tests and the measurement service's statement outlining any recommendations concerning retesting or mitigation. (Section III 8.0 describes appropriate documentation.)
- All correspondence between you and the measurement service.

F. When to Test

Short-term radon tests (tests lasting just a few days) require minimizing air exchange into and out of a building: closed-building conditions. For testing programs where the occupants may not be active participants in the testing process, actions must be considered to help ensure closed-building conditions for short term tests.

Choosing a time of year when required closed-building conditions are a normal condition will aid in ensuring reliable measurements.

Real-Estate Transactions: Testing for radon prior to every transfer of a residential dwelling to a new owner is recommended. Even if a building has been tested before, additional measurements help to ensure that conditions, including structure and ventilation, have not changed. (Note that disclosure regarding inspections and radon levels found are usually required during real-estate transactions. Your State Radon Office or other local authority may be able to provide additional information.) Property owners should also consider testing in advance of initiating a real estate sale so that the transaction will not later be delayed.

Non-Real-Estate Testing: Although radon testing can begin at any time during the year, consider conducting measurements during a time of year when required closed-building conditions are the normal conditions. For example: In cooler climates it is recommended that you schedule short-term testing during the colder months of the year (i.e. heating seasons such as October through March). Contact your State Radon Office for information on seasonal variations.

G. Retesting

Many factors can cause indoor radon concentrations in your building to change over time. New openings to the earth may develop due to settling/deterioration of the building structure and/or construction or renovation work including energy upgrades. Pressure relationships can change if HVAC equipment is added, removed, replaced, operated differently or improperly maintained. These changes may produce elevated radon concentrations in rooms in which the initial radon test results were below 4 pCi/L (148 Bq/m^3). Therefore, ***retesting*** the building every five years is recommended.

When tests indicate low concentrations, consider confirming low concentrations by repeating tests during different seasons and weather conditions to account for possible seasonal variations.

In addition, radon concentrations should be retested when the following occur:

- A new addition is added;
- Significant changes to the slab or foundation such as major cracks or penetrations that occur due to natural settling, water proofing or groundwater control efforts;
- Significant construction blasting or earthquakes occur nearby;
- An installed mitigation system is altered, modified or repaired;
- A ground contact area that was not previously tested is occupied.

Retests after mitigation: To provide an initial measure of radon reduction system effectiveness, conduct a short-term measurement no sooner than 24 hours after a radon reduction system is operational and within 30 days after installation of system. Conduct the test in the same location as the pre-mitigation test location or the lowest livable area. Also conduct a post-mitigation test in the lowest livable area above any crawlspace that is structurally isolated. It is recommended that additional measurements be conducted in the lowest livable area above each other unique structural area. Additional testing should be conducted in the areas that were mitigated at least every two years to ensure that the system remains effective, and testing may be conducted as often as desired.

Limited License, CRCPD National Radon Training Meeting, September 28, 2014, Not for Reprint or Resale.

H. Actions Recommended Based Upon Test Results

4 pCi/L (148 Bq/m^3) **or greater.**

If testing indicates radon concentrations equal to or greater than 4 pCi/L in any apartment, office area, exercise facility, meeting room, dining area or other common area, you should reduce the radon to below 4 pCi/L. The higher the radon concentration, the more quickly action should be taken to reduce the concentrations.

Below 4 pCi/L (148 Bq/m^3).

Radon concentrations below 4 pCi/L still pose some risk. If test results are below 4 pCi/L, confirm the low results by testing again, at least every five years and whenever significant changes to the building's structure or mechanical systems occur. (See G above for more information.)

You may also consider conducting a long-term test or several short-term tests in different seasons of the year. The closer a long-term measurement is to 365 days, the more representative it will be of annual average radon concentrations. Such considerations may be especially important in regions where geology or other factors may cause wide variations in radon concentrations.

Between 2 and 4 pCi/L (Between 74 and 148 Bq/m^3)

If the test results are between 2 and 4 pCi/L, you should consider taking measures to reduce the concentrations in the building. (Note that reducing and accurately confirming radon concentrations of about 2.0 pCi/L or below may be difficult.)

100 pCi/L (3,700 Bq/m^3) **or greater**

Call the State Radon Office or Department of Health for immediate protective action recommendations if radon test results approach 100 pCi/L or greater.

For Non-Residential Rooms/Enclosed Spaces:

Reduce the radon concentration

1. if testing indicates radon concentrations equal to or greater than 4 pCi/l in these locations

AND

2. if either (a) these areas are occupiable with little or no modification, or (b) these areas serve as a source of radon into apartments and offices of upper story floors that have radon concentrations equal to or greater than 4 pCi/l.

(See Section III for complete testing protocol.)

I. Mitigation

How quickly to begin the mitigation process will depend on the radon concentration detected. Elevated radon concentrations of more than twice the action level [or more than 8 pCi/L (296 Bq/m^3)] demand a quicker response.

How to Mitigate

To successfully lower radon concentrations, conditions in the entire building must be evaluated. Reducing radon concentrations requires diagnostics and mitigation.

- Diagnostics may include evaluation of radon entry points, air pressure relationships within and under a building and other factors. Diagnostics are often needed to identify the appropriate radon reduction technique and design.
- Mitigation is the design and implementation of a radon reduction system.

You should use a contractor who is trained and licensed or certified to fix radon problems. A qualified contractor can investigate a radon problem in your building and help you choose the right treatment method. Lowering high radon concentrations requires technical knowledge and special skills.

Limited License, CRCPD National Radon Training Meeting, September 28, 2014, Not for Reprint or Resale.

Blank Page

Protocol

Section III:

AARST CONSORTIUM
On National Radon Standards

Protocol for Conducting Radon and Radon Decay Product Measurements in Multifamily Buildings

1.0 Purpose and Scope

1.1 Purpose: The purpose of conducting radon measurements is to identify locations that have elevated radon concentrations and to determine if radon mitigation is necessary in order to protect current or future occupants. The purpose of test protocols is to help achieve reliable radon measurements.

1.2 Scope: These protocols address measuring radon concentrations in Multifamily buildings comprised of more than three attached dwellings. When testing single-family residences or buildings comprised of three or fewer attached dwellings, see applicable EPA or state-specific standards or protocols.

These protocols may be employed for testing structures whether conducted for non-real estate purposes or when associated with a real estate transaction. Tests conducted for an individual dwelling in a multifamily building including condominiums or co-op units may employ these strategies yet conditions that meet the requirements of 6.0 below (Conditions required before and during the test) are still required for the whole building when short-term detectors are deployed.

1.3 Limitations: Suggested best practices to help ensure testing quality have been included, however:

1.3.1 This document is not intended to address all detailed technical aspects of measurement device technology or quality assurance.

1.3.2 Radon Decay Products: Due to difficulties establishing appropriate controlled conditions and other related concerns, the consensus of stakeholders found that radon decay product measurements require additional steps to create the conditions in residences that would allow them to be used to make radon mitigation decisions. Therefore, the use of working level monitors and any conversions between pCi/L and WL will be subject to the conditions described in Appendix B, and the use of radon decay product measurements to make mitigation decisions in Multifamily buildings is not currently supported by this standard.

1.3.3 Other special considerations. See 3.6 and 3.7 for discussions of situations that may indicate when additional steps beyond minimum protocols are appropriate for consideration.

2.0 Preparing for the Measurement

2.1 Devices and personnel:

2.1.1 All devices used for measuring radon in buildings shall meet state requirements and be approved by NEHA-NRPP or NRSB. All devices shall be used in strict accordance with manufacturers instructions.

2.1.2 Consult the manufacturer to determine whether the devices are capable of measuring over the chosen deployment period.

2.1.3 In addition, individuals who place or analyze radon measurement devices shall meet state licensing requirements or should be certified by the NEHA-NRPP or NRSB.

2.1.4 For large testing projects, additional Quality Control procedures should begin prior to deployment. (See 5.0 and 5.4 below.)

2.2 Prior Notification and Closed-building compliance. Control test conditions prior to and during testing. Maintain ***closed-building protocol*** for short-term tests.

2.2.1 **Ensure Occupant Notification:** Failing to comply with required conditions is most likely to occur when residents are not properly informed about the necessary test conditions.

2.2.1.1 Determine whether the building is new, occupied, and who will be responsible for closed-building conditions prior to and during the measurement period.

2.2.1.2 Prior to placing devices, ensure that an appropriate ***notice of inspection*** is distributed to residents at least two weeks in advance of testing and again a few days prior to the test for both tested and non-tested locations. (See example Exhibit 5 and Exhibit 8.) This will also help residents become familiar with the purpose and dates of testing.

2.2.1.3 Upon initiation of a short-term test, post ***"Radon Survey in Progress"*** notifications in conspicuous locations stating the conditions of the test. (See Exhibit 7.)

2.2.1.4 Request occupant of tested locations sign a ***non-interference statement form.*** (See Exhibit 6.) This can also help ensure that the occupant was able to comply with the required conditions and did not tamper with the test devices or conditions.

Limited License, CRCPD National Radon Training Meeting, September 28, 2014, Not for Reprint or Resale.

ED_006395_00002031-00138

2.2.1.5 It is also recommended to request signatures on a ***non-interference statement form*** from occupants of **all** other locations not being tested in the building. (See Exhibit 9.)

3.0 Where to Test

3.1 Conduct a measurement in each ground contact apartment, dwelling and those rooms that are used as office space. This means each unit that has floor(s) and/or wall(s) in contact with the ground or is over crawlspaces, utility tunnels or parking garages.

Within each dwelling, test a room located in the lowest livable level that is in contact with the ground or above a crawlspace, utility tunnel or garage. If the lowest level is not currently used but could serve as a den, playroom, office, work area or an additional bedroom at some time in the future, conduct a test in this level.

(See placement example diagrams in Exhibits 1a and 1b.)

3.2 Also conduct a measurement in non-residential ground-contact rooms or areas (e.g. utility rooms, storage rooms, and maintenance rooms) that:

- are occupiable with little or no modification; or
- have air communication with occupiable areas (e.g. stairwells and elevator shafts).

When in doubt, test the area. Results from testing these unoccupied areas provide assurance regarding current or future use of the building, and they may indicate a need for additional testing in upper areas. These unoccupied areas may serve as a pathway for radon into apartments and offices of upper floors.

3.3 For large rooms or open areas – Place one detector every 2,000 square feet (186 square meters) (e.g., a square area with each side 45 feet (13.7 meters) in length).

3.4 On the upper floors, conduct a measurement in at least one apartment on each floor; include measurements in at least 10 % of the dwellings on each of the higher floors. It is recommended that the upper floor test locations be selected so that units on one floor are not directly above or below units being tested on other floors. (See placement example diagrams in Exhibit 1c.)

3.5 Test all areas during the same time period (days or phase).

3.6 Additional Protocols depending upon Heating, Cooling and Ventilation Systems:

Table 3.6
(See Exhibit 1-d and 1-e for graphic illustration.)

Group 1: Basic Heating and Cooling

A dedicated system for each dwelling that does not supply additional fresh air for ventilation.

- **Forced-air** heating and air conditioning (HAC) systems (such as normally seen in single-family residences).
- **Ductless Systems**
  - Non-Forced-Air Hot and Cold Water Circulation (sometimes called radiator systems).
  - Window AC or Unit Ventilators (w/fresh air closed).
  - Wall or Baseboard heating/cooling.
- **Ductless Split Systems:** One system for cooling and one system for heat (i.e. Window AC for cooling and Baseboard heat).

(No additional requirements. See 3.6.1)

Group 2: Multi-zone Systems

Independent systems and controls for different areas within the same dwelling.

(Additional test locations may be required. See 3.6.2)

Group 3: Variable Distribution and Ventilation

- Systems where the airflow from a single air handler is distributed to multiple dwellings or locations with independent controls within each dwelling for duct dampering. Such systems include Variable Air Volume (VAV) systems or systems with fixed volume return vents and controls for dampering supply air.
- Systems that add fresh air ventilation (HVAC). Such systems may exist for service to a whole building, multiple dwellings or as single unit ventilators.

(Additional protocol requirements. See 3.6.3 and 4.4)

If you are unsure as to the type of system that is present, consult with the building representative, a mechanical engineer or a heating and air-conditioning contractor..

If additional test locations are warranted, preferred rooms are ground contact bedrooms and any rooms that can be closed off from the main part of the dwelling. When in doubt, test the area.

3.6.1 Group 1: Basic Heating and Cooling. (See Exhibit 1-d.) No additional test locations are required within the dwellings where each dwelling has a dedicated system that does not supply additional fresh air for ventilation.

3.6.2 Group 2: Multi-zone systems. Place enough additional detectors in ground contact rooms within the dwelling to adequately characterize and record differences between rooms within the same

Limited License, CRCPD National Radon Training Meeting, September 28, 2014, Not for Reprint or Resale.

dwelling that are serviced by different systems. (See Exhibit 1-d.)

3.6.3 **Group 3: Variable Distribution and Ventilation.** These systems can cause radon concentrations to vary widely from test to test (or room to room) based upon normal variation in system operation. (See Table 3.6 above and Exhibit 1-e for graphic illustration.)

For Group 3 systems: Place both a long-term and a short-term detector simultaneously in each ground contact test location (see 3.1 through 3.4 above) and in additional locations within each dwelling to ensure that each bedroom, general living area and any other major area that can be closed off from the main part of the dwelling has been tested. (See 4.4 for additional details.)

3.7 Testing in Areas with Geologic Considerations:

Local geologic and topographic characteristics have been correlated with unusual or sizable variations in indoor radon concentrations. If a foundation is connected to a sub-surface cavity system, which connects to the radon-producing strata, large variations can occur. The most common examples are buildings found in limestone-rich areas where groundwater has eroded passages in the underlying rock (*karst*) or areas with faulting which could allow radon to be transported in an unusual manner.

Structures in regions where these geologic characteristics exist have been shown to have the potential for wide variations in radon concentrations. Confirming low results by repeating tests during different seasons and weather conditions or with long term testing is especially important for such regions.

Radon offices in some states may have information on the presence of geologic characteristics that can create unpredictable radon entry behavior. If you are uncertain whether these conditions exist in your area, contact your State Radon Office.

3.8 Choosing a location in a room

The following criteria shall be used to select a location in a room to place detectors:

3.8.1 Place the detectors within the general ***breathing zone***. Locate the detectors **no less than**:

- Three feet (90 centimeters) from exterior doors and windows or other potential openings to the outdoors
- One foot (30 centimeters) from the exterior wall of the building
- 20 inches (50 centimeters) from the floor
- Four inches (10 centimeters) from other detectors and surrounding objects or as recommended by the manufacturer or laboratory.
- For those detectors that may be suspended, an optimal height is no higher than eight feet (2.5 meters) from the floor and a minimum of one foot (30 centimeters) below the ceiling.

3.8.2 Select a position where the detectors will not be disturbed during the measurement period. The detectors must not be moved, covered or have their performance altered during the test.

3.8.3 *Do not* place detectors inside closets, crawlspaces or hallways or in enclosed areas of high humidity or high air velocity. The latter may include kitchens, laundry rooms, and bathrooms.

3.8.4 *Do not* place detectors inside cupboards, sumps, or nooks within the building foundation.

3.8.5 *Do not* place detectors near drafts caused by heating, ventilating and air conditioning vents, or fans.

3.8.6 *Do not* place detectors near heat sources, such as on appliances, near fireplaces or in direct sunlight.

3.8.7 *Avoid* placing detectors on or near furnishings made of or containing natural stone, e.g. granite counters, hearths or slate pool tables.

Limited License, CRCPD National Radon Training Meeting, September 28, 2014, Not for Reprint or Resale.

4.0 Testing Strategies

Any of the following test strategies may be employed for testing structures whether conducted for non-real estate purposes or when associated with a real estate transaction. Tests conducted for an individual dwelling, condominium or co-op unit may employ these strategies yet conditions that meet the requirements of 6.0 below (Conditions required before and during the test) are still required for the whole building when short-term detectors are deployed.

See Appendix E "Project Plan: Procedural Checklist For Testing" and illustrations in Exhibits 1-2 for calculating the number of test detectors that will be needed for each strategy option.

Acceptable strategies:

A. **Extended** Test Protocol *(corresponding to EPA's Citizen's to Guide to Radon or latest comparable EPA document for homeowners and non-real estate situations).* (See Table 4.1 and Flowchart Figure 1.)

The ***Extended testing protocol*** entails a quick and cost-effective initial test with follow-up testing in locations where elevated radon concentrations were initially measured. The ***Extended testing protocol*** is an option when time constraints are not prohibitive and when occupant relations allow the performance of a second test when needed. Follow-up tests may be short-term tests or, when initial tests indicate concentrations of 4 to 8 pCi/L (148 to 296 Bq/m^3), long-term follow-up tests may be employed to provide a better understanding of the year-round average radon concentration for those occupants and to be more certain that you should mitigate. There are still health risks at radon concentrations below 4 pCi/L (148 Bq/m^3) and long term retesting should be considered if results are between 2 and 4 pCi/L (74 to 148 Bq/m^3).

B. The **Time-Sensitive** test protocol (*corresponding to EPA's Home Buyer's and Seller's Guide to Radon or latest comparable EPA document)* (See Table 4.2 and Flowchart Figure 2.)

Time-Sensitive testing protocols require additional controls to aid reliability of results during a single phase of testing. ***Time-Sensitive testing protocols*** may be appropriate for situations where quick decisions are needed or when other strategies are unacceptable. Time-sensitive situations may include: real estate transactions; planned renovations; or other situations that require a quick evaluation of whether radon mitigation is needed. Options provided in this protocol might also be desired when logistics or public relations with occupants render other strategies unacceptable (i.e. when occupants might consider repeated access and closed-building requirements to be disturbing intrusions into their homes).

C. Special considerations are outlined for **Retests after mitigation** (see 4.3) and **Buildings with Group 3: Variable Distribution and Ventilation HVAC Systems.** (See 3.6, 4.4 and Exhibit 1-e.)

4.1 Extended Protocol

Table 4.1

Extended Testing Protocol (corresponding to EPA's Citizen's Guide to Radon for homeowners - non-real-estate circumstances)	
TYPE OF TEST (passive devices)	*What to do next if the test result is 4.0 pCi/L or greater*
Single Short-Term Test	*Test this location again ** **If the first short term test is 8.0 pCi/L or greater, conduct a second short-term test immediately. If the first short term test is 4.0 to 8.0 pCi/L, conduct either a short term or a long-term test.*
Average of 2 Short-Term Tests	*Fix the building* *Consider fixing between 2.0 and 4.0 pCi/L*
A Long-Term Test	*Fix the building* *Consider fixing between 2.0 and 4.0 pCi/L*
Less than 4.0 pCi/L: Confirm the low result by testing again every five years and whenever significant changes to the building's structure or mechanical systems occur. Testing during a different season and different weather conditions or with long-term testing is recommended.	

(See Figure 1: Extended Testing Protocols.)

4.1.1 **Step 1: Initial Measurements**:

Conduct initial measurements under closed uilding protocols (see 6.0) for at least 48 hours using short-term tests (i.e. 2 to 90 days) to provide a quick answer to whether high radon concentrations are present.

Test periods of at least 4 to 5 days are recommended for multifamily buildings when short-term tests are employed, because it is sometimes difficult to ensure closed-building conditions existed 12 hours prior to the test at every dwelling.

4.1.1.1 ***Quality control:*** The required number of duplicate measurements is at least **10 percent** of all the testing locations. The number of

Limited License, CRCPD National Radon Training Meeting, September 28, 2014, Not for Reprint or Resale.

blank measurements needed is equal to **5 percent** of all the testing locations. (See 5.0 below for additional quality control requirements including spiked measurements and Appendix A for additional information.)

4.1.2 Step 2: Follow-up Measurements

Do not use the results of a single short-term passive test detector as the basis for determining whether to mitigate an area.

Conduct a follow-up test, at a minimum, in every testing location with an initial short-term test result of 4 pCi/L (148 Bq/m^3) or greater. Test additional locations as necessary, e.g. invalid tests from the original testing series, other locations surrounding original elevated locations, and locations or pathways that may influence elevated radon concentrations in the building. All follow-up measurements should be initiated during the same time period (or phase) and placed in the same locations as the initial measurements.

4.1.2.1 Use a *short-term, follow-up* test if results are needed quickly.

The higher the initial short-term test result, the more certain you can be that a short-term follow-up test should be used rather than a long-term follow-up test.

If the initial short-term measurement for a testing location is 8.0 pCi/L (296 Bq/m^3) or greater (twice the EPA's radon action level of 4 pCi/L [148 Bq/m^3] or more), a short-term follow-up measurement should be taken immediately. Use the average of the initial and follow-up test results to determine if this location needs mitigation.

All short-term tests should produce results in the same measurement units and to the extent possible, should be made in the same locations and under the same conditions as the initial tests.

4.1.2.2 Use a *long-term, follow-up* test to better understand the year-round average radon concentration and to be more certain that you should mitigate.

For a better understanding of your year-round average radon concentration or when an initial test indicates 4.0 to 8.0 pCi/L (148 to 296 Bq/m^3), you may consider a long-term follow-up test conducted as close to a year as possible ensuring that the test period includes multiple seasons one of which is a heating season. Long-term tests must be deployed for *a minimum of 91 days* and closed-building conditions are not required for test periods lasting longer than 90 days. You may use the result of this test to determine if this location needs mitigation.

4.2 Time-Sensitive Protocol

4.2.1 Time-Sensitive Measurement Options:

These measurement strategies involve a single phase of testing and therefore require additional controls to ensure reliability of results when making mitigation decisions based upon a single phase of testing.

Table 4.2

Time-Sensitive Testing Protocols (corresponding to EPA's "Home Buyer's and Seller's Guide to Radon")	
TYPE OF TEST	*What to do next if the location is 4.0 pCi/L or greater*
Passive Devices: *(Passive devices do not provide hourly measurements)* **Simultaneous Testing**: Conduct two short-term tests at the same time in the same location for at least 48 hours. Locate detectors no less that 4 inches (10 centimeters) from other test devices and surrounding objects or as recommended by the manufacturer or laboratory. **Average the results.**	*Fix the building if the average is 4.0 pCi/L or greater* *Consider fixing between 2.0 and 4.0 pCi/L*
Continuous Monitor (Active) Devices: *(These devices provide hourly measurements.)* Test the room with a continuous monitor for at least 48 hours.	*Fix the building.* *Consider fixing between 2.0 and 4.0 pCi/L*

(See Figure 2: Time Sensitive Testing Protocols)

4.2.1.1 Simultaneous Testing: Conduct the measurement at each location with two short-term passive test detectors at the same time in the same location for at least 48 hours under

Limited License, CRCPD National Radon Training Meeting, September 28, 2014, Not for Reprint or Resale.

closed building protocols. (See 6.0 below.) Test periods of at least 4 to 5 days are recommended for multifamily buildings when short-term tests are employed, because it is sometimes difficult to ensure closed-building conditions existed 12 hours prior to the test at every dwelling.

Locate devices no less that 4 inches (10 centimeters) from other test devices and surrounding objects or as recommended by the manufacturer or laboratory. The results of both measurements should be reported. Use the average of the two results to determine if this location needs mitigation.

4.2.1.1.1 Quality control: This option results in **100 percent** duplicates. The number of blank measurements needed is equal to **5 percent** of all the testing locations. (See 5.0 below for additional quality control requirements including spiked measurements and Appendix A for additional information.)

4.2.1.3 Continuous Monitor devices: A continuous monitor is capable of providing and averaging reviewable hourly readings. Conduct short-term tests for at least 48 hours under closed building protocols. (See 6.0 below.) Test periods of at least 4 to 5 days are recommended for multifamily buildings when short-term tests are employed, because it is sometimes difficult to ensure closed-building conditions existed 12 hours prior to the test at every dwelling.

This option may only be cost-effective for very small building complexes. However, continuous monitors might be chosen for areas of the building(s) where a more detailed assessment of radon fluctuations is appropriate (i.e. locations where significant fluctuations in pressure or ventilation might be expected). Use the average result of this test to determine if the location needs mitigation.

4.2.1.3.1 Quality control: The required number of duplicate measurements is at least **10 percent** of all the testing locations. (See 5.0 below for additional quality control requirements and Appendix A for additional information.)

4.3 Retests after mitigation

To provide an initial measure of radon reduction system effectiveness, conduct a short-term measurement no sooner than 24 hours after a radon reduction system is operational and within 30 days after installation of system. Conduct the post-mitigation testing in the areas that were mitigated and in the same locations as the pre-mitigation test locations.

Conduct post-mitigation testing in all locations where elevated radon was found in the initial testing phase.

Conduct additional testing in the areas that were mitigated at least every two years to ensure that the system remains effective. Testing may be conducted as often as desired.

4.4 Testing Strategy for Buildings with Group 3: Variable Distribution and Ventilation HVAC Systems. (See 3.6, Table 3.6 and Exhibit 1-e.)

Place both a long-term and a short-term detector simultaneously in each test location (see 3.6.3). Deploy detectors in accordance with 4.1.1.1 (Quality Control) for each detector type and short-term detectors in accordance with 4.1.1 (Initial Measurements).

If all results from short-term testing are below the action level, use only the results from long-term detectors for decisions to mitigate.

If any short-term test result is above the action level, continue to use the results from long-term detectors as the most reliable measurement for decisions to mitigate, unless occupant safety or time constraints are paramount. (See Section 4.4.1 below.)

Deploy long-term test devices for the following time periods to determine the need to mitigate:

- If the highest short-term test result is 10 pCi/L (370 Bq/m^3) or greater, leave all the long-term detectors in place for at least 91 days.
- If the highest short-term test result is 4.0 pCi/L (148 Bq/m^3) or greater but less than 10 pCi/L, (370 Bq/m^3) leave all the long-term detectors in place for at least 180 days.
- If the highest short-term test result is less than 4.0 pCi/L (148 Bq/m^3), leave all the long-term detectors in place for one year.

4.4.1 If short-term results cause concern for occupant safety or where time constraints are paramount, a follow-up short-term test that corroborates the initial elevated reading(s) may present enough information to mitigate. In this situation, test in accordance with 4.1.2 (Step 2: Follow-up Measurements). If follow-up readings do not corroborate the initial elevated readings and consideration has been applied towards helping ensure tests were conducted properly, use the results of the long-term measurement to make a mitigation decision. Note that Multifamily

Limited License, CRCPD National Radon Training Meeting, September 28, 2014, Not for Reprint or Resale.

ED_006395_00002031-00143

buildings with Group 3 mechanical systems render short-term test strategies less likely than a long-term test to reflect a year-round average radon level or to correctly indicate the need for mitigation.

5.0 Quality Control In Testing Multifamily Buildings

Testing requires an overall quality assurance plan for tracking precision and bias that includes duplicate, blank and spiked measurements. (See Appendix A.) These requirements apply to both short-term and long-term devices. Evaluate and report these measurements as they represent an "early warning system" to identify problems that may have developed during the testing of Multifamily buildings. Quality Assurance (QA) and related standard operating procedures are an inherent requirement of any measurement program or project.

5.1 Blanks and duplicates shall be part of a radon measurement professional's quality assurance plan and shall be included in the final report documentation (see 8.5.4).

Table 5.1

General Quality Control Measurements	
Duplicate Measurements (side-by-side detectors)	**Blank Measurements** (unexposed detectors)
The number of duplicate measurements shall be equal to or greater than 10% of all testing locations (or as specified by the test strategy chosen.) See 4.0 above.	The number of blank measurements shall be equal to 5% of all testing locations. Field blanks (blanks deployed at the testing location) are not required. However, allocating 3% field blanks and 2% office/laboratory blanks is recommended.

See APPENDIX A for additional information on QC.

5.2 Field blanks are generally not required to be deployed at the testing site. However, radon measurement professionals should consider deploying 3% field blanks and 2% office blanks to evaluate background exposures throughout the sampling process. Office blanks remain in the office setting. Field blanks are taken to the site and left on site to parallel sampling conditions.

5.3 **Special considerations for blank detectors in large deployments.** As the number of units to be tested in a complex increases, the need for specialized blank procedures also becomes greater. With a larger number of testing locations and detectors, the investiture of time and money for the client and the radon measurement professional becomes great enough that an early detection procedure should be included in the blanks deployment protocol.

Table 5.3

Additional QC Measurements for Larger Projects
At a minimum of 50 test detectors deployed, testers should increase the number of blanks to 9 detectors:
• 3 *Laboratory* blanks should be returned to the laboratory immediately to evaluate quality prior to beginning detector deployment. These detectors serve both to evaluate the quality of the laboratory and any unexpected exposures that might result from shipping or handling;
• 3 *Office* blanks should remain in office locations where detectors are stored or handled and then returned to the laboratory with the sampling detectors per normal procedure for field detectors, These detectors serve to evaluate any unexpected exposures that might result from storage, and handling;
• 3 *Field* blanks should be deployed in the field with the sampling detectors and be returned to the laboratory per normal procedure for field detectors. These detectors serve to evaluate any unexpected exposures that might result onsite or from handling procedures.
If more than 180 test detectors are deployed, the standard 5% blanks number can be resumed, however, the practice of using pre-test blank evaluation and office plus field blanks should be continued.
NOTE: Consult with the manufacturer/laboratory to insure detector-specific procedures approved by the manufacturer/laboratory are used when conducting blank measurements.

See APPENDIX A for additional information on QC.

5.4 **Spiked measurements and special considerations for spiked measurements in large deployments.** Spiked measurements for the testing project (or from the radon measurement professional's ongoing QC plan) shall also be included in the final report documentation (see 8.5.4). As the number of units to be tested in a complex increases, the need for specialized spike procedures also becomes

Limited License, CRCPD National Radon Training Meeting, September 28, 2014, Not for Reprint or Resale.

greater. With a larger number of testing locations and detectors, the investiture of time and money for the client and the radon measurement professional becomes great enough that an early detection procedure should be included in the spike protocol.

At a minimum of 100 units to be tested, testers should ensure that the result of three spiked detectors from the sampling program batch have been received and are satisfactory (±25 % of the reference value) prior to beginning the sample deployment.

6.0 Conditions required before and during the test

Long-term tests (those lasting 91 days or more) do not require closed-building conditions. Long term tests should be conducted as close to a year as possible ensuring that the test period includes multiple seasons (one of which is a heating season).

Short-term tests conducted for two days to 90 days require **closed-building conditions.**

Purpose of Closed-building Conditions: Closed-building conditions are required for short-term measurements to stabilize radon concentrations and entry rates and increase the reproducibility of the measurement. Without these controlled conditions, measurements can indicate higher or lower readings than are typically present.

6.1 Closed-building Protocol

- Closed-building conditions shall be maintained throughout the test period and for 12 hours prior to the initiation of measurements lasting less than four days
- All windows on all levels of the building shall be kept closed and all external doors shall be kept closed (except for momentary entry and exit). This includes areas not being tested.
- Heating and cooling systems shall be set to normal, occupied, operating temperatures; fan/blower controls shall be set to intermittent activity unless the system is designed to only run the fan continuously.
- Whole house fans shall not be operated.
- Occupants should avoid excessive operation of clothes dryers, range hoods, bathroom fans and other mechanical systems that draw air into and out of the building.
- Solid, liquid, or gas fuel burning fireplaces shall not be operated unless they are the primary/normal sources of heat for the dwelling.

6.1.1 Additional closed-building requirements

- Window air-conditioning units shall only be operated in a re-circulating mode.
- Equipment that supplies fresh air to the dwelling shall be deactivated unless it is an integral part of the HVAC system or supplies make-up air to a combustion appliance.
- Window fans shall be removed or sealed shut.
- Fans installed in attics to control only attic air and not whole-building temperature or humidity may continue to operate.
- Air exchangers: Normal operation of permanently installed ventilation systems such as energy recovery ventilators (also known as heat recovery ventilators or air-to-air heat exchangers) may continue during closed-building conditions so long as the system is regularly maintained and continuously operational. If such a system is labeled or intended to serve as a radon control system, see 6.2 below: Special considerations, Radon Mitigation Systems.
- **New construction, renovations and repairs:** Items that shall be completed or installed before the radon test is initiated include:
  - all insulation,
  - all exterior doors and hardware,
  - all windows,
  - all fireplaces and fireplace dampers,
  - all heating/cooling appliances (functioning and set to run at normal occupied temperatures),
  - all ceiling coverings,
  - all interior trim and wall coverings,
  - all exterior siding, weatherproofing and caulking.
  - structural openings to the **exterior** as a result of incomplete construction, structural defect, disrepair, or the like shall be closed or repaired 12 hours prior to initiating the test.

6.2 Special considerations

- **Severe Weather:** Short-term tests lasting less than four days should not be conducted during unusually severe storms or periods of unusually high winds.
- **Radon Mitigation Systems:** Prior to beginning a test, a permanently installed active radon reduction system shall have been operating for at least 24 hours and shall continue to operate during the test period. In addition, closed-building conditions shall be

Limited License, CRCPD National Radon Training Meeting, September 28, 2014, Not for Reprint or Resale.

ED_006395_00002031-00145

maintained 12 hours prior to initiating a valid test period and throughout test.

6.3 Detector Deployment Periods

6.3.1 Short-Term Detectors: Short-term detectors shall be deployed for two to 90 days.

Test periods of at least 4 to 5 days are recommended for multifamily buildings when short-term tests are employed, because it is sometimes difficult to ensure closed-building conditions existed 12 hours prior to the test at every dwelling.

Since terminating a measurement at exactly 48 hours is often impractical, some flexibility is allowed. For example, for integrating or equilibrating devices, retrieval of detectors after 46 hours is allowed (assuming Closed-building Protocol requirements are met). For continuous monitors, the first four hours of data may be discarded or incorporated into the result using system correction factors (EPA 402-R-92-004; EPA 1992). There must be at least 44 **contiguous** hours of usable data to produce a valid average. The "backing out" of data (i.e., removal of portions imbedded in the two days) to account for weather or other phenomena will invalidate the measurement. The periodic results shall be averaged to produce a result that is reported to the client and used to make mitigation decisions.

Termination of a short term test that is longer than two days should be done as close as possible to 24-hour increments to help ensure diurnal fluctuations in radon concentrations within a dwelling are reflected in the results evenly.

6.3.1.1 If a monitor cannot integrate readings each hour or less or is not set to record readings each hour or less, **then it is functioning as an integrating device and is not considered a continuous monitor** under these protocols.

6.3.1.2 Radon decay product measurements require additional controls for closed building test conditions when used to make radon mitigation decisions. At this time, existing documents and science were not found to adequately address these considerations and several related concerns. Therefore, the use of radon decay product measurements to make mitigation decisions in Multifamily buildings is not currently supported by this standard. The use of radon decay product measurement devices and any conversions between pCi/L and WL will be subject to the conditions described in Appendix B and as amended over time.

6.3.2 Long-Term Detectors: Long-term detectors shall be deployed for a minimum of 91 days. It is recommended that they be deployed for a minimum of six months over different seasons (one of which is a heating season) **or** as close to a year as possible to reflect seasonal changes in radon concentrations and building operation. This is especially important for dwellings that are serviced by heating and cooling systems based upon variable distribution and ventilation (See 3.6.3, Table 3.6 and Exhibit 1-e). Closed-building conditions are not required, but are recommended. State Radon Offices may have information on seasonal variation.

6.4 Test Condition Verification: The test should include methods to prevent or detect interference with testing conditions or the testing detector. The radon measurement professional or occupant should be able to verify or provide documentation asserting that testing conditions were not violated during the testing period. A test company's minimum requirements for verifying test conditions shall be fulfilled by the following:

6.4.1 Informing the person responsible for building operation of the required test conditions;

6.4.2 Obtaining or attempting to obtain a signed noninterference agreement;

6.4.3 Posting a *Radon Test in Progress* notification form;

6.4.4 Conducting a visual inspection of the dwelling upon placement to assure all closed-building conditions are intact;

6.4.5 Conducting a visual inspection of the dwelling upon retrieval of the detector including:

6.4.5.1 Maintenance of closed-building conditions,

6.4.5.2 Changes in the detector placement,

6.4.5.3 Condition of all tamper seals (see 6.5).

6.4.6 The radon measurement professional is not responsible for inspecting for closed-building conditions 12 hours before the start of the test or between placement and retrieval of the detectors.

6.4.7 If, at the initiation of the test, the radon measurement professional discovers or observes that closed-building conditions have not been maintained, one of the following options is required:

- The radon test can be postponed until at least twelve hours of closed-building conditions have been maintained prior to the test;
- The radon test period can be extended to four days or more with an appropriate detector after closed-building conditions are initiated;

Limited License, CRCPD National Radon Training Meeting, September 28, 2014, Not for Reprint or Resale.

- For continuous monitors, detector features or methods may be used to obtain an average reading that represents at least 48 hours of contiguous data collected after at least twelve hours of closed-building conditions have been maintained (e.g. a test may be run for 60 hours, the first 12 hours discarded and the last 48 averaged manually).

6.5 Other controls and aids for detecting failed compliance or interference

- *Placement Indicators:* A position for the detector can be chosen and noted so that, upon retrieval, any handling or covering of the detector can be detected.
- *Seals:* Non-re-sealable caulks and/or tapes can be used to verify that detectors have not been altered or moved; in addition, they can be used to verify that windows or non-primary exterior doors have not been opened during the test. If broken, seals may help determine if testing conditions were altered or a detector was disturbed. For a seal to be effective:
  - The seal must adhere readily to a multitude of surfaces yet be easily removed without marring the surface;
  - It needs to be non-re-sealable or show evidence of disturbance;
  - It must be unique enough to prevent easy duplication; and,
  - It should be visible enough to discourage tampering.

  Most paper or plastic tapes and caulks have only some of these qualities. There are, however, a number of seals manufactured specifically for radon testing. It would be advisable to use one of these products and follow the manufacturer's recommendations for installation. The best caulking to use as a seal is a removable weather-stripping caulk. This type of caulking adheres readily to most surfaces yet comes off easily without leaving a mark or being re-sealable.
- *Control Monitors:* The inclusion of at least a few detectors that provide hourly data indicating fluctuations in radon can aid confidence that no unusual conditions affected the measurement results. Hourly data for fluctuations of environmental factors such as temperature, humidity and barometric pressure can also aid identification of unusual conditions.

7.0 Special Consideration for Large Disagreement between Duplicate (or Collocated) Results.

Minor variation between the results of duplicate detectors is typical. However, if the variation is unusually large, it may indicate problems in the measurement system which could adversely affect the entire testing series.

One situation requires special attention: Where one test result is 4.0 pCi/L (148 Bq/m^3) or greater and the test result of the collocated detector is less than 4.0 pCi/L (148 Bq/m^3), **if the higher result is twice or more the lower result, a repeat test is required.** (See Appendix A for additional information on Duplicate results.)

8.0 Documentation

The detector placement log and supporting documentation shall be maintained for at least six (6) years after testing. Sufficient information about each measurement shall be recorded in this permanent log to allow for future comparisons, interpretations, and reporting to residence managers.

Final report documentation shall include:

8.1 **Test Site:** The address of the building(s) tested, including zip code.

8.2 **Testing Service information:**

8.2.1 The company/measurement professional's name, contact information and current certification ID number or equivalent state license ID number as applicable,

8.2.2 The name and identification number of the service or organization used to analyze detectors.

8.3 **State Radon Office contact information.**

8.4 **A summary of measurement results** and a statement outlining any recommendations concerning actions for retesting or mitigation. Interpretations and recommendations both written and verbal should reflect guidance provided in the "Introductory Guidance to Residence Managers" (attached above) and shall be provided in accordance with the latest versions of EPA's *Home Buyer's and Seller's Guide to Radon,* EPA's *Citizen's Guide to Radon,* or as recommended or required by the State Radon Office for the location of buildings being tested.

8.5 **The report shall contain all valid individual measurement results.**

8.5.1 When using continuous radon monitors, hourly readings shall be included.

8.5.2 Measurements made in separate locations shall NOT be averaged. They must be reported individually.

8.5.3 Radon gas results reported in picocuries per liter (pCi/L) shall be reported to only one figure after the decimal (e.g. 3.2 pCi/L). The average of collocated measurement detectors shall be reported as well as the individual results. (Note: If the average of two measurements produces a result of 3.95 pCi/L, standard mathematical rules

Limited License, CRCPD National Radon Training Meeting, September 28, 2014, Not for Reprint or Resale.

should be followed and such average shall be reported as 4.0 pCi/L.)

8.5.4 All quality control measurements shall be reported as such.

8.5.5 Any reports or test data acquired from residents who have independently tested.

8.6 **Detector and location information:**

8.6.1 Documentation of the locations of all detectors deployed. It is advisable to diagram the test area noting the location and measurement results of the detector. Supplemental photographic records for test locations are advised. (See Exhibit 3 for an example *detector placement log*.)

8.6.1.1 Include documentation regarding locations that should have been tested, but were not tested, with an explanation of the reasons why tests were not conducted.

8.6.1.2 Include documentation of missing, lost and non-retrievable detectors.

8.6.2 The exact start and stop dates and times of the measurement exposure period.

8.6.3 A description of the devices and detectors used including identification/serial numbers.

8.6.4 A record of quality control measures associated with the test such as results of duplicate and blank measurements.

8.7 **Test Conditions**

The Report shall contain sufficient information to allow clients to evaluate the data, interpretations and also make comparisons to any previous or future tests.

8.7.1 **Protocol Conditions:** Include a description of any observed deviations from appropriate measurement procedures that may affect the measurement results.

- Observed non-compliance with or deviations from required conditions such as closed-building conditions, prior to or during the test period.
- Observed deviation from a normal occupied temperature.
- Changes in the detector's placement, whether any seal has been altered or test interfered with.
- Any observed anomalies in data printed from a continuous radon monitor that may indicate interference with the detector or test conditions or non-standard testing conditions.
- A description of any unusual or severe weather conditions.

8.7.2 **Non-interference controls**

- Include a description of any non-interference controls used such as tamper seals, control monitors or other methods.
- Include information on whether the responsible individual signed the noninterference agreement.
- Include copies of signed noninterference agreements.

8.7.3 **Mitigation System Status** (if applicable)

- The test company shall include a statement in the test report if a mitigation system was observed in a dwelling during the placement or retrieval of the detector(s);
- Whether the mitigation system fan was operating;
- A statement may be included in the report that the test company offers no findings as to the proper operation of the system.

8.7.4 **Temporary Conditions**: Include a description of observed building conditions or other factors that are temporary in nature and may affect the measurement results. The report shall also document for the client that the test may not reflect the client's risk from radon if such conditions are altered from the condition existing during the test period. Temporary conditions include:

- Units that were tested and vacant during the test period;
- The condition of any temporary radon mitigation methods that are not permanent installations;
- The condition of any permanent vents (i.e. open/closed) such as crawlspace vents;
- The condition of active or passive air supplies to the building or to combustive appliances.
- If a permanently installed ventilation system, such as a heat recovery ventilator or air-to-air heat exchanger, is active during the test but ready access exists for deactivation or it functions intermittently.
- Conditions of unusually severe storms or periods of unusually high winds.

8.8 **Statement of Test Limitations**

The report shall describe the general limitations of the test. An example is the following: "There is an uncertainty with any measurement result due to statistical variations and other factors such as daily and seasonal variations in radon concentrations. Variations may be due to changes in the weather, operation of the dwelling, or possible interference with the necessary test conditions."

Limited License, CRCPD National Radon Training Meeting, September 28, 2014, Not for Reprint or Resale.

Figure 1

Extended Testing Protocols

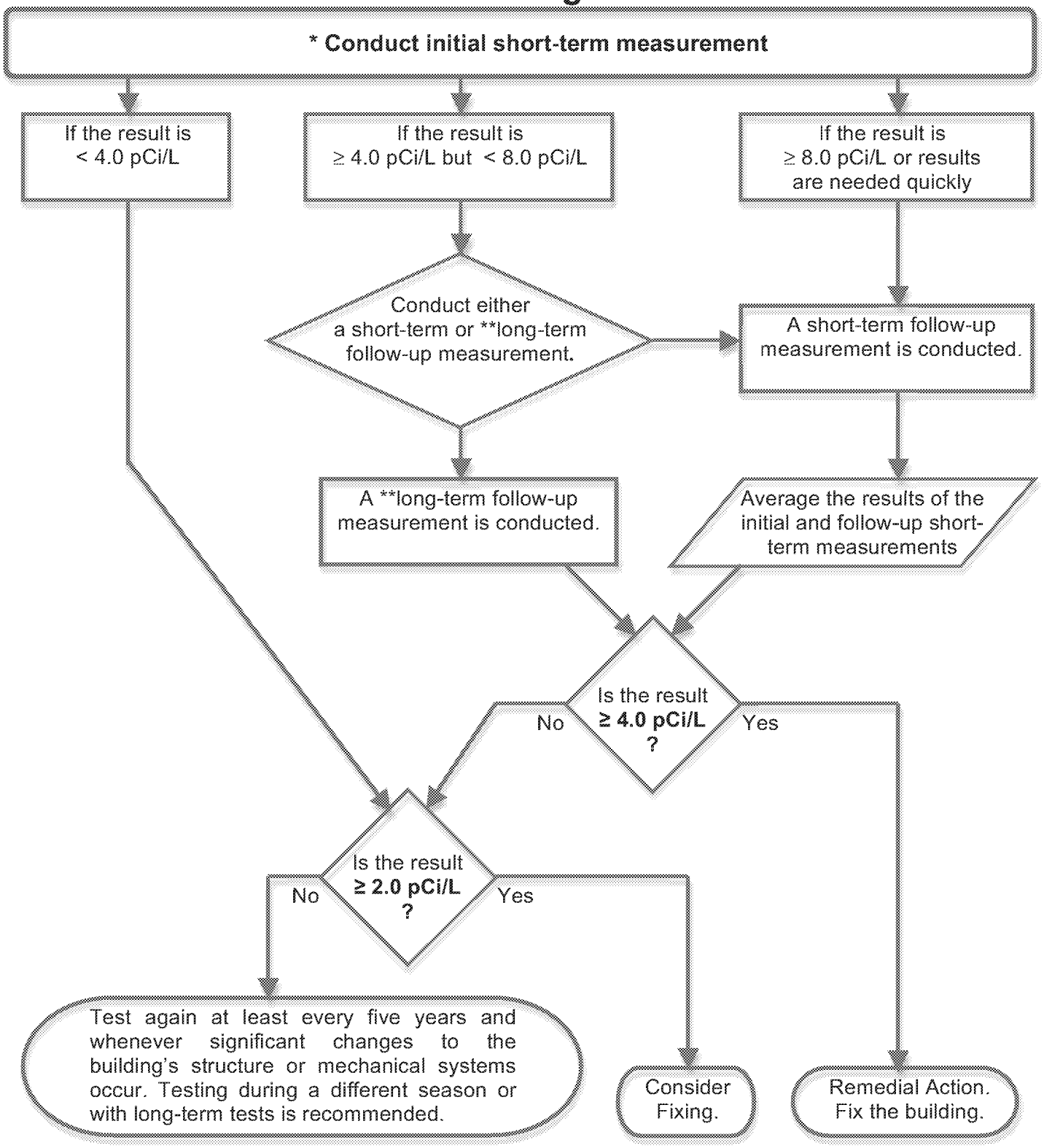

* *Choosing a time of year when closed-building conditions are a normal condition will aid in ensuring reliable measurements.*

** *Long-term tests should be conducted as close to a year as possible ensuring that the test period includes multiple seasons.*

Limited License, CRCPD National Radon Training Meeting, September 28, 2014, Not for Reprint or Resale.

ED_006395_00002031-00149

Figure 2

Time-Sensitive Testing Protocols

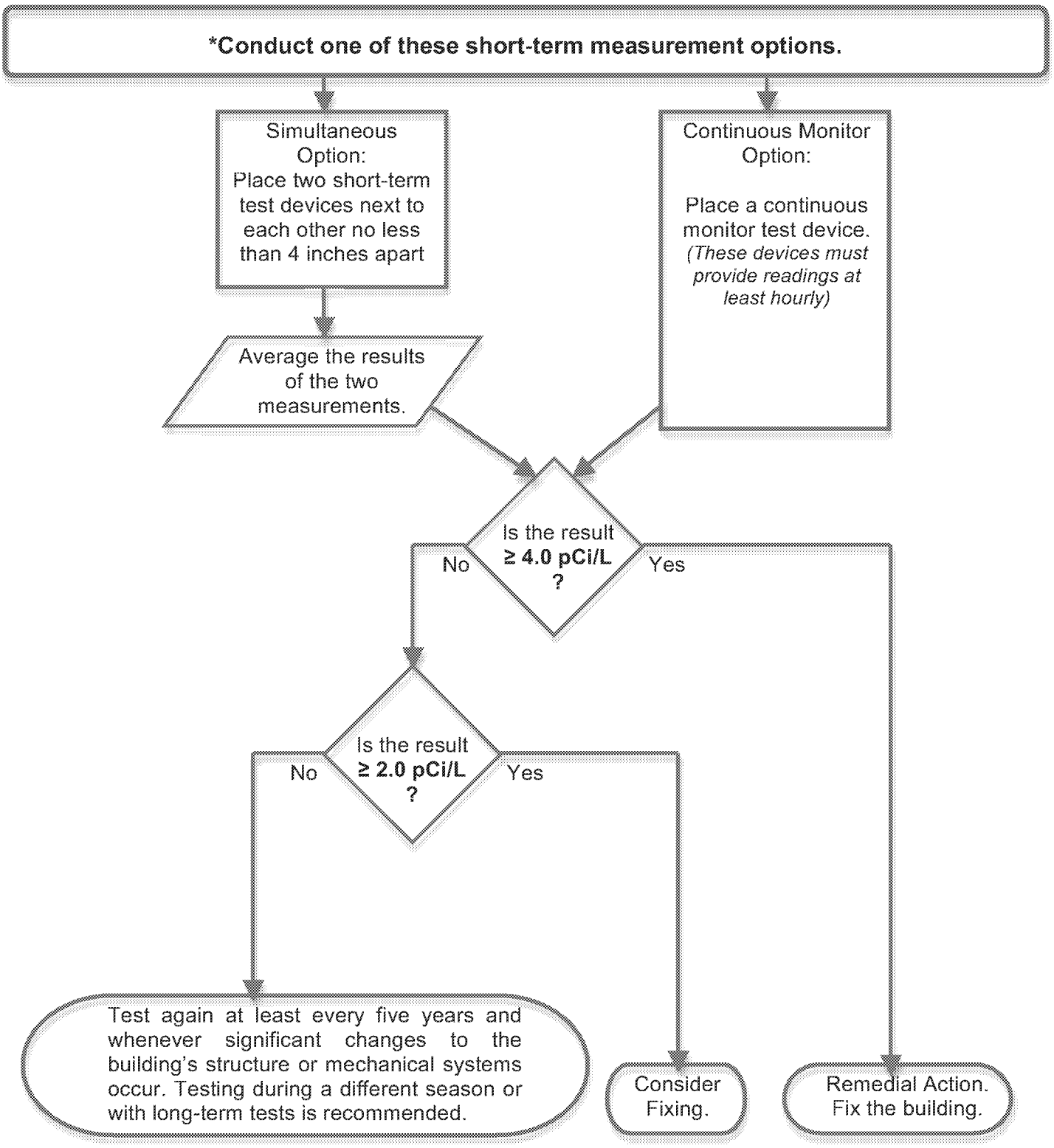

* *Choosing a time of year when closed-building conditions are a normal condition will aid in ensuring reliable measurements.*

Limited License, CRCPD National Radon Training Meeting, September 28, 2014, Not for Reprint or Resale.

ED_006395_00002031-00150

Appendix A

DESCRIPTIONS OF MEASUREMENT DEVICES AND QUALITY CONTROL MEASURES

(This section is intended for informational purposes only. For radon testing protocol, see Section III.)

DESCRIPTIONS OF MEASUREMENT DEVICES

Integrating or Equilibrating Devices: A radon measurement system in which the sampling detector, and analysis system often do not function as a stand-alone unit. Integrating devices include electret ion chambers, alpha track monitors, and continuous monitors that are not set to, or are incapable of, recording radon concentration in time increments of one hour or less. Equilibrating devices include activated charcoal kits and liquid scintillation vials. *Integrating* and *Equilibrating* detectors often require laboratory analysis.

Continuous Devices: Test devices that record reviewable measurements of radon or radon decay products (progeny) concentration in time increments of one hour or less.

Abbreviations for Devices referenced in this document

Equilibrating Devices
AC – Activated Charcoal
LS -- Charcoal Liquid Scintillation
Integrating Devices
ES -- Electret Ion Chamber (short-term)
EL -- Electret Ion Chamber (long-term)
AT – Alpha Track (filtered)
Other Integrating Devices: *Devices not designed or set to record hourly readings.*
Continuous Devices
CR – Continuous Radon Monitor
CW – Continuous Radon Decay Product Monitor
Other Devices
Future technologies

Equilibrating Devices

AC – Activated Charcoal Devices
ACs are equilibrating devices. The charcoal within the detectors has been activated to increase its surface area which increases the ability to adsorb gases. The equilibrating nature of the activated charcoal allows continual adsorption and desorption of radon. During the entire measurement period (typically forty-eight hours to seven days), the adsorbed radon undergoes radioactive decay. ACs should be promptly returned to the laboratory after the exposure period (by service that guarantees delivery within two to three days at maximum). AC detectors are analyzed by gamma-ray spectroscopy which measures the emissions of gamma rays from two short-lived decay products of radon, ^{214}Pb and ^{214}Bi.

LS – Charcoal Liquid Scintillation Devices
Charcoal liquid scintillation (LS) devices are equilibrating devices that function on the same principle as AC devices. LS detectors adsorb radon onto the charcoal in a vial. LS detectors must be resealed and sent to the laboratory for analysis promptly after the exposure period (by service that guarantees delivery within two to three days). They are called "liquid scintillation" devices because they are analyzed by mixing the charcoal containing the radon with an organic "cocktail" and then counting, in a liquid scintillation counter, light pulses emitted due to the emission of alpha and beta particles from radon and its short-lived decay products.

Integrating Devices

EL/ES – Electret Ion Chambers
Electret ion chamber devices (EL/ES's) are integrating devices that allow radon to diffuse into a chamber through a filter. Radiation emitted from the decay of radon and its decay products produces charged particles (ions) within the chamber. The negative ions are attracted to the positively charged electret and discharge it. The electret is removed from the canister and its voltage measured with a special surface electrostatic voltmeter both before and after the exposure period. The difference between these two voltage readings is used to calculate the average radon concentration.

EL/ES's are designed to measure for short periods of time (e.g. 2 to 5 days) or for long periods of time (e.g. 9 months). The type of the electret (i.e. short or long-term) and chamber volume determine the usable measurement period. The electret readings are affected by ambient gamma radiation ionizing air inside the chamber, and the readings must be corrected for external gamma-rays.

AT – Alpha Track Devices
An alpha track device (AT) is an integrating device consisting of a small piece of plastic or film (the sensor) enclosed in a housing with a filtered opening. Radon diffuses through the filter into the housing where it undergoes radioactive decay. This decay produces

Informational Section

Limited License, CRCPD National Radon Training Meeting, September 28, 2014, Not for Reprint or Resale.

ED_006395_00002031-00151

alpha particles that strike the sensor and generate submicroscopic damage called alpha tracks. The damaged portions of the plastic can be made visible by etching in a caustic solution, because the damaged areas are more soluble in caustic than the undamaged plastic. The etched areas can be seen using a microscope. The tracks are typically counted using computer recognition and automated scanning. The number of tracks per unit area is proportional to the integrated average radon concentration in pCi-days/liter. AT's are most commonly used for medium- to long-term tests up to one year in length.

Continuous Monitors

CR and CW – Continuous Radon Monitors and Radon Decay Product Monitors

Continuous monitors use various types of sensors. Some collect air for analysis with a small pump while others allow air to passively diffuse into a sensor chamber. All have electrical circuitry capable of producing and recording integrated radon concentrations for periodic intervals of one hour or less.

Continuous radon monitors measure radon gas. Continuous radon decay product monitors measure radon decay product concentrations and require a pump to sample air containing radon decay products onto a filter assembly.

If a device cannot integrate or record readings each hour or less or is not set to record readings each hour or less, then it is functioning as an integrating device.

Other Devices:

Devices that may be developed that use various other sensors and technologies for integrating data over time. All devices used for measuring radon in buildings shall meet state requirements and be approved by NEHA-NRPP or NRSB. All devices shall be used in strict accordance with manufacturer's instructions.

DEVICE QUALITY CONTROL

Terminology associated with *quality control (QC)* is briefly explained below.

Quality Assurance (QA) and related standard operating procedures are an inherent requirement of any measurement program or project. In lieu of other consensus protocols that may be developed, see EPA Guidance on Quality Assurance (402-R-95-012, October 1997) for details on quality assurance. Additional specific requirements for each device can be found in EPA's "Indoor Radon and Radon Decay Product Measurement Device Protocols." Written Quality Assurance Plans are required of radon measurement professionals and labs who are state licensed or certified by NEHA-NRPP or NRSB.

Duplicate (Collocated) Measurements

Duplicates are pairs of detectors or monitors deployed in the same location, side-by-side for the same measurement period. The purpose of duplicates is to evaluate precision or agreement between detectors. (Note: Duplicates do not evaluate accuracy; for accuracy, see spiked measurements below.) Duplicates may help identify problems that may introduce error into the test results. Duplicates are typically deployed at a rate of 10% of the measurement locations. When establishing a testing service's overall quality control plan up to fifty duplicates per month are recommended. However, additional duplicate measurement may be required for specific testing programs such as discussed herein for Multifamily buildings.

Field duplicates should provide the same or similar radon results. Duplicate pairs of measurements greater than or equal to 4 pCi/L (148 Bq/m^3) should produce a Relative Percent Difference (RPD) greater than 36% no more than 1% of the time. Greater than 1% duplicates above 4 pCi/L (148 Bq/m^3) with an RPD greater than 36% indicates the measurement system is "out of control," and all measurements are questionable.

See Appendix C "Definition of Terms" for information on calculating the RPD.

If one duplicate is equal to or greater than 4 pCi/L (148 Bq/m^3) and the other below, the higher result may not be twice or more than the other. Such measurements must be repeated.

Blank Measurements

Blanks are integrating or equilibrating detectors that are not intentionally exposed for sampling (i.e. not left open to permit radon to enter the detector during the deployment period). Blanks help evaluate any detector response from sources other than radon exposure at a testing location such as in the manufacturing process or during shipping, storage, analysis and handling.

Blanks are typically deployed at a rate of 5% of the measurement locations. When establishing a testing service's overall quality control plan, up to 25 blanks per month are recommended.

However, additional blank detectors may be required for a specific testing program such as herein discussed for Multifamily buildings. See Section III, subsection 5.0.

Consult with the manufacturer/laboratory to insure detector-specific procedures approved by the manufacturer/laboratory are used when conducting blank measurements. For many detectors, blanks are unwrapped and immediately re-

Limited License, CRCPD National Radon Training Meeting, September 28, 2014, Not for Reprint or Resale.

ED_006395_00002031-00152

wrapped (or momentarily opened and closed) to give the appearance that they have been used in testing. The blanks are then shipped with the exposed detectors so that the laboratory cannot distinguish them.

- *Laboratory blanks* are those returned to the laboratory immediately in order to evaluate laboratory quality yet also serve to evaluate if any unexpected exposures resulted during shipping or handling.
- *Office blanks* are those that remain in office locations where detectors are stored or handled in order to additionally evaluate any unexpected exposures that might result in those locations. Detectors should be stored and handled in a known low-radon environment.
- *Field blanks* are those that accompany the onsite sampling detectors in order to evaluate any unexpected exposures that might result onsite or from handling procedures.

Since blanks are not exposed, their measurement value should be below the lower limit of detection (LLD—the radon concentration below which the measurement system cannot accurately measure). Depending on the device, if one or more results are greater than the LLD, this may indicate defective detectors, poor quality control or improper procedures. If a problem is identified, the detector supplier should be contacted to evaluate and institute corrective procedures.

Spiked Measurements

Spikes are detectors that have been exposed in a NEHA-NRPP or NRSB approved chamber to a known concentration of radon (i.e. "spiked" with radon). Using spiked measurements can help evaluate the accuracy of a laboratory analysis and/or how accurately detectors supplied by a laboratory measure radon.

Detectors from the same batch as those slated for the sampling program are spiked and returned to the laboratory for analysis as near the sampling period as possible. Many detectors are time sensitive and require return to the laboratory for analysis immediately after spiking. In general, spikes are included at a rate of no less than 3 per 100 sampling locations. When establishing a testing service's overall quality control plan, up to six spikes per month and a minimum of three per year are standard operating procedure. However, a specific testing program such as discussed herein for Multifamily buildings may require additional spiked detectors.

The results from spikes are compared to the known value provided by the reference facility where they are spiked using the formula for Relative Percent Error (RPE). The RPE is plotted on a control chart. If the result of a spike differs greatly from the spike's known concentration, it may indicate that the detectors are defective or the laboratory procedures are faulty. EPA 402-R-95-012, *Guidance on Quality Assurance* provides guidance on how to set warning and control limits. In general, the expectation is that the values of RPE fall between +10% and -10%, but the entire range of +20% to -20% is considered "in control." Outside of +/-20% but inside +/-30% is the warning level and outside of +/-30% is the control limit.

See Appendix C "Definition of Terms" for information on calculating Relative Percent Error.

Quality Control for Continuous Monitors

Continuous radon monitors require calibration and background checks within the timeframe recommended and at facilities approved by certification requirements, state licensure requirements or the manufacturer's recommendation, whichever is more stringent. Annual calibrations are commonly a minimum requirement. Cross-checks should be conducted at least every six months. Duplicates using a continuous monitor are to be deployed in 10% of the measurement locations. The agreement of duplicate results are calculated using the RPD as noted above and plotted on control charts. An informal intercomparison with a co-located device that reads in the same units (i.e. pCi/L) can also aid in checking quality.

Limited License, CRCPD National Radon Training Meeting, September 28, 2014, Not for Reprint or Resale.

ED_006395_00002031-00153

Appendix B

Radon Decay Product Measurement:

The scope of this measurement standards document includes reconciling previous standards documents and guidance publications and adding updated information that relates to residence measurement in order to achieve a protocol deemed credible by the stakeholder delegates.

Items specific to radon decay product measurements in residences were reviewed and considered in an open forum as well as within the subcommittee of stakeholder delegates. Considerations particular to radon decay product measurements include specific controls for closed building test conditions and specific considerations for reporting test results and any conversions between units of measurement. At this time, existing documents were not found to adequately address these considerations and science has not been presented regarding establishing appropriate conditions for radon decay product measurements in homes.

Therefore, Appendix B has been designated as the location in this document for additional protocols specific to the measurement of radon decay products in residences. Scientific studies delineating appropriate protocols are being solicited for review and evaluation through the stakeholder process. Until completion of that process, the use of radon decay product measurements to make mitigation decisions in residences is not supported by this standard.

NOTICE

The committee is formally soliciting suggestions on the wording of the protocol that will standardize testing conditions in residences sufficiently to provide confidence in radon decay product measurements for residential real estate transactions and consumers' interest, and on wording for appropriately using conversion information and conversion factors. Since a comparatively small pool of existing protocol text exists regarding specific considerations for working level measurements, supporting scientific documentation will be needed for proposed wording in order to maintain the integrity of the document and confidence of those using the protocol.

The committee is looking forward to active participation from all interested parties in developing a protocol that will be respected by stakeholders across the spectrum.

All such submissions must be forwarded to standards@aarst.org or faxed to (913) 273-0134 in order to receive consideration. Submissions will then be posted by AARST staff for workgroup and committee review.

Limited License, CRCPD National Radon Training Meeting, September 28, 2014, Not for Reprint or Resale.

ED_006395_00002031-00154

Appendix C

Definition of Terms

Becquerel per cubic meter (Bq/m^3): A unit of radioactivity representing one disintegration per second per cubic meter: 1 Bq/m^3 (0.027 pCi/l).

Blank Measurements: Blanks are integrating or equilibrating detectors that not intentionally exposed for sampling (i.e. not left open to permit radon to enter the detector during the deployment period). Blanks help evaluate any detector response from sources other than radon exposure at a testing location such as in the manufacturing process or during shipping, storage, analysis and handling. See Appendix A and Section III for more information.

Client: The individual or parties who hire(s) and/or pay(s) for the radon test.

Collocated: Two or more simultaneous measurements in the same location, or side-by-side

Continuous Radon Monitor (CR or CRM): Test devices that are capable of, and set to, record and review radon in time increments of one hour or less.

Crawlspace: An open area beneath part or all of the livable space of a dwelling that typically has either a concrete slab or dirt floor. The dirt floor may be covered with gravel or a membrane. The crawlspace can have an open height of a few inches to several feet. The crawlspace can be storage space but is not living space, and may or may not be ventilated to the outside.

Duplicate Measurements: Duplicates are pairs of detectors or monitors deployed in the same location, side-by-side for the same measurement period. The purpose of duplicates is to evaluate precision or agreement between detectors. See Appendix A and Section III for more information.

Equilibrating detector: A detector which functions by adsorbing and/or desorbing radon from or to the ambient air until an equilibrium condition is reached between the radon concentration in the detector and the radon concentration in the ambient air. Equilibrating detectors include 1) activated charcoal in containers, such as canisters, bags or trays, which are analyzed in a laboratory using gamma-ray spectroscopy and 2) activated charcoal in containers, such as cartridges or vials, which are analyzed in a laboratory using liquid scintillation spectroscopy.

Exposure time: The length of time a detector must sample radon to get an accurate measurement. Also called "exposure period," or "duration of exposure."

Extended testing: An initial short-term test is followed by a short- or long-term test if a radon concentration is found to be elevated. The decision to mitigate is based on the average of two short-term tests or the result of the long-term test.

Integrating device: A device that records, or registers in some manner, information that is directly related to the integral of ambient radon concentration over time within the operating range of the device. Integrating devices include 1) electret ion chambers which are analyzed after the fact by measuring a decrease in electrical potential on the electret, 2) alpha-track detectors which are analyzed after the fact by etching and measuring the track density in a plastic matrix and 3) electronic devices that are not set to, or are incapable of, recording radon concentration in time increments of one hour or less.

HAC Systems: Heating and cooling (air conditioning) systems that are not designed to also supply fresh air ventilation. HAC systems are common to single-family residences. If they also provide fresh air ventilation, they are more technically referred to as HVAC systems.

Limited License, CRCPD National Radon Training Meeting, September 28, 2014, Not for Reprint or Resale.

ED_006395_00002031-00155

HVAC System: Heating and cooling (air conditioning) systems that are additionally capable of supplying fresh air ventilation. If they do not supply fresh air ventilation, they are more technically referred to as HAC systems.

Measurement professional (See Radon Measurement Professional)

Mitigation system: Any system designed to reduce radon concentrations in the indoor air of a building.

Multifamily building: A building with more than three attached dwellings.

Picocurie (pCi): One pCi is one trillionth of a curie (10^{-12}) or 0.037 disintegrations per second or 2.22 disintegrations per minute.

Picocurie per liter (pCi/L): A unit of concentration of radioactivity corresponding to 0.037 decays per second or 2.22 decays per minute in a liter of air or water. 1 pCi/L = 37 becquerels per cubic meter (Bq/m^3).

Quality Assurance (QA): A complete program designed to produce results which are valid, scientifically defensible, and of known precision, bias, and accuracy. Includes planning, documentation, and quality control (QC) activities.

Quality Control (QC): The system of activities to ensure a quality product, including measurements made to ensure and monitor data quality. Includes calibrations and backgrounds, duplicate, blank, and spiked measurements, inter-laboratory comparisons, audits, and other control activities.

Radon (Rn): A colorless, odorless, naturally occurring, radioactive, inert, gaseous element formed by radioactive decay of radium (Ra-226) atoms. The atomic number is 86. Although other isotopes of radon occur in nature, in this document, radon refers to the gas Rn-222.

Radon measurement professional: Any state licensed or nationally certified person or entity that conducts radon testing for remuneration. A professional holds a current radon license from a state where radon testing services are regulated or current national certification recognized by the state in which the test is being conducted. Or, if the testing is being conducted in a non-regulated state, then the professional should have current certification recognized by the non-regulated state.

Relative Percent Difference (calculations): The relative percent difference between a pair of duplicate measurement detectors is calculated by dividing the difference between the two results by the average of the two results and multiplying by 100.

$RPD = [(|X_1 - X_2|)/X_{ave}] \times 100\%$

where:

X_1 = result of detector 1

X_2 = result of detector 2

$|X_1 - X_2|$ = absolute value of the difference between detectors 1 and 2

X_{ave} = average concentration = $((X_1 + X_2)/2)$

Example:

$X_1 = 9.0$ and $X_2 = 8.0$

$RPD = [(|9 - 8|)/8.5] \times 100\% = 1/8.5 \times 100\% = 11.8\%$

Relative Percent Error (calculations): The relative percent error (RPE) is the difference between the known or reference concentration of radon used by a chamber to spike a detector and the resulting measurement value after analysis of the spiked sample, expressed as a percentage of the known

ED_006395_00002031-00156

concentration. The RPE may be either a positive or negative number, indicating whether the measured concentration is higher or lower than the known concentration. RPE is calculated by subtracting the known concentration from the measured concentration, dividing by the known concentration, and multiplying the result by 100%.

RPE = (MV – TV)/TV x 100%

where:

MV = measured value of detector

TV = target value of radon chamber

Example:

MV = 11.0 and TV = 10.0

RPE = (11-10)/10 x 100% = 10%

Single family dwelling: A residence or home intended to house a single family and requiring discrete testing location(s).

Spiked Measurements: Spikes are detectors that have been exposed in an approved chamber to a known concentration of radon (i.e. "spiked" with radon). Using spiked measurements can help evaluate the accuracy of a laboratory analysis and/or how accurately detectors supplied by a laboratory measure radon. See Appendix A and Section III for more information.

Standard Operating Procedure: A written document which details an operation, analysis, or action whose mechanisms are prescribed thoroughly and which is commonly accepted as the practice to be followed for conducting certain routine or repetitive tasks.

Test interference: The altering of test conditions prior to or during the measurement in order to change the radon or radon decay product concentrations, or the altering of the performance of the measurement equipment.

Time Sensitive: A measurement strategy that involves a single phase of testing, requiring enhanced quality control measures. Time-sensitive tests include Simultaneous, and Continuous Monitor testing.

Limited License, CRCPD National Radon Training Meeting, September 28, 2014, Not for Reprint or Resale.

ED_006395_00002031-00157

Appendix D

(This section is intended for informational purposes only. For radon testing protocol, see Section III.)

CHECKLIST FOR SELECTING A SERVICE

Selecting a Measurement Service

1. Contact your State Radon Office (http://www.epa.gov/radon/whereyoulive.html) and request a list of state-licensed radon measurement professionals where applicable or seek professionals certified by either of the two nationally recognized certification programs: The National Environmental Health Association – National Radon Proficiency Program (NEHA-NRPP.org); or the National Radon Safety Board (NRSB.org).
2. Verify the state license (or NEHA-NRPP or NRSB certification) of the professionals conducting the tests and the firms analyzing the detectors by requesting a copy of their current License or Certification Card.
3. Consider checking their references and business history regarding complaints or regulatory actions and any resolutions with your State Radon Office, Better Business Bureau, and State Office of Consumer Protection.

Requesting a Cost Estimate

4. Invite the radon measurement professional to walk through your building(s) before formulating their estimate. Request that they complete *Steps 1 through 4* of Appendix E. These steps serve as a guide for estimating the number of detectors needed and the time that is required to test your building.

Developing a Contract

5. After selecting a measurement contractor, request a contract detailing the terms described in the proposal. Carefully read the contract before signing. Consider including the following in the contract:
   - A limit on the time required to report the measurement (often within 30 calendar days after completion of testing).
   - A description of exactly what work will be done prior to and during the testing period, the time and logistics required to complete the work, and the total cost of the job including all applicable taxes, permit fees, down payment (if any), and terms of payment.
   - A statement that the measurements will meet the standards herein or as recognized by your State, the USEPA, or nationally recognized radon certification program including a statement that they adhere to a QA and QC plan.
   - An outline of the responsibilities of each party in the event that measurements do not fully meet these standards. When the fault is the contractor's, provisions might include re-testing affected dwellings at no cost to the property owner. When the fault is beyond the control of the contractor (i.e. occupants losing detectors, occupant non-compliance, occupants refusing access, etc.) provisions might include a description of possible remedies and related additional expense.
   - A statement that liability insurance and applicable worker's compensation coverage is carried by the organization in the event of injury to persons or damage to property during the measurement process.
   - A statement that the tests will be conducted by state licensed, or nationally certified individuals (as appropriate)
   - A statement that the license or certification number of the individual placing/retrieving the test kits, their signature, and the date will be on the documentation for test results
   - A statement that the contract will be dated and signed by all parties
   - That the contract will be on company letterhead
   - A statement of commitment that copies of the signed contract will be distributed to all signatories
   - A statement of commitment that records of the testing project and the contract will be kept on file for six (or more) years as recommended elsewhere in the standard.

Limited License, CRCPD National Radon Training Meeting, September 28, 2014, Not for Reprint or Resale.

ED_006395_00002031-00158

Appendix E

(This section is intended for informational purposes only. For radon testing protocol, see Section III.)

PROJECT PLAN: PROCEDURAL CHECKLIST FOR TESTING

The following procedural checklist represents a step-by-step guide for conducting a radon testing program for a Multifamily, residential building. One should be familiar with the issues discussed in SECTIONS II and III of this document before using this checklist. In addition, one should review and understand each section of this checklist before proceeding through the steps.

Planning a Test

1. Develop a floor plan that identifies all the testing locations that are in contact with the ground, are above a crawlspace or as otherwise required herein for test locations. In addition to ground contact plans, floor plans for upper floors will be helpful in selecting the location for the upper floor (10%) requirement. It is recommended that the upper floor test locations be selected so that units on one floor are not directly above or below units being tested on other floors. That will increase the likelihood that the distribution of test detectors identifies pathways for radon migration into upper floors or different batches of building material. Note, the residence manager or head maintenance person may have floor plans available. Identify heating, cooling and ventilation system designs for all testing locations (See 3.6 for further details). If you are unsure as to the type of systems that are present, consult with maintenance personnel, a mechanical engineer or a heating and air-conditioning contractor. You might consider scheduling a time with maintenance personnel to perform a "walk through" of the building complex to identify testing locations.

2. Mark an "X" on the floor plan for areas appropriate for testing.
   a. Note any obstacles that may prevent access or appropriate test conditions. (i.e. Is there a personal lock on door and no key available to open the door?)
   b. Make appropriate considerations for detector placement within the area to be tested.
      - Will you need any special material (e.g. tape, thumb tacks, scissors, string, etc.) to place the detector?
      - What technique(s) will you use to detect tampering?

3. Choose a test strategy that fits your situation (Extended or Time Sensitive Protocols). Take note of quality control requirements for the strategy chosen.

4. Duplicates: Mark a "D" on your floor plan for each testing location expected to receive a duplicate measurement. One duplicate measurement is required for every ten measurement locations unless a 100% duplicate testing strategy has been chosen. See Section III, 4.0 through 4.2 (Extended or Time Sensitive protocols.)

5. Blanks: Account for blank measurements (5% of test locations - See Section III, 5.0 through 5.3 for specific guidance). For example: Randomly mark a "B" on your floor plan for locations that will receive blanks. Avoid placing a "B" in a testing location that already contains a "D". This strategy for recording duplicates and blanks will enable you to intersperse these QC measurements on the log sheets so that the laboratory analyzing your detectors will not be able to identify which recorded measurements are blanks and duplicates. See Exhibit 2 for an example floor plan.

6. Spikes: Account for spiked measurements (See Section III, 2.1.4, 5.0 and 5.4 for specific guidance). For example: Randomly mark an "S" on your floor plan to indicate spiked measurements as required. This strategy will enable you to intersperse these QC measurements on the log sheets so that the laboratory analyzing your detectors will not be able to identify which recorded measurements are spikes.

7. Choose the appropriate device and verify that it is suitable for the times projected for deployment. When selecting the test device vendors, make sure that the reporting and QC expectations will be able to be supported by the company providing the final reports, whether it is a radon measurement professional or testing laboratory. Some laboratories may have preferred chain-of-custody/log sheet formats and processing options (i.e., electronic submission,) so make sure that your record keeping procedures match the capabilities and requirements of the laboratory.

8. Purchase detectors and schedule pre-test QC measurements if appropriate.

Limited License, CRCPD National Radon Training Meeting, September 28, 2014, Not for Reprint or Resale.

ED_006395_00002031-00159

Scheduling the Deployment/Retrieval of Detectors

9. Schedule a time with the maintenance personnel for deployment and retrieval of detectors. Provide the number of days that will be needed to deploy and retrieve the detectors so that the maintenance personnel can make the necessary arrangements in their schedules for placement and retrieval at close to 24 hour increments for short term tests.

10. Prepare Resident Notifications (i.e. advance notices for residents, non-interference agreements and "test in progress" signs, etc.)

11. Ensure that reasonable advance notification is provided to residents of the dwelling regarding likely deployment/retrieval dates, required test conditions and other information as appropriate. See Exhibits 5 - 9.

12. Reconfirm your scheduled deployment date(s) and time(s) with the maintenance personnel no later than 2 to 3 days prior to testing.

Preparing Deployment Documentation

13. Prepare log sheets and floor plan drawings.

    - Record the name of the building that you are testing in the space provided on each detector placement log sheet (hereafter, log sheet).
    - Using your floor plan as a reference, record the apartment number or other identifier in the appropriate column of the log sheet for each testing location in the order that you plan to test.
    - For testing locations marked with a "B," indicating a blank detector, record a "B" in the "Room #/Name" column and "Location" column just below the testing location marked with a "B"

      For testing locations receiving duplicate pairs (i.e. locations marked with a "D") record a "D" in the "Room #/Name" column and "Location" column just below the room receiving duplicates. See Exhibit 4 "Example of Data entry: Chain-of-custody / Log" for a sample log sheet.
    - Note the *location* where you plan to place the detector for each apartment or enclosed space.

Deploying the Detectors

14. Before entering a testing location, verify its room number or name with the one on the log sheet.

15. Place the detector and record the detector's serial number in *Serial # column.* Record the date and time of deployment.

16. Place the "Radon Survey In Progress" notice and compliance statement in a conspicuous place. (See Exhibit 7.)

17. Remember to place two detectors or *duplicates* in testing locations preceding a log entry containing a "D". When recording the deployment time for duplicates, consider adding a few minutes (e.g. 2 to 5 minutes) to the starting time so that the laboratory will not know they are duplicates.

18. Though *blank detectors* may not actually be deployed, it is still important to record plausible deployment dates, times and locations for these detectors. (See Section III, 5.0 through 5.3 and Appendix A for more information on blank detectors.)

19. Record the name of the person placing/retrieving test detectors in the space provided at the end of each log sheet.

Retrieving the Detectors

20. When picking up each detector, check its location and serial number with what was recorded during deployment. Note any discrepancies, test interference or non-compliance of required conditions in the *Comments column* of the log sheet. If the serial number does not agree with the one listed, change the number to the "new" one and note the change as a comment.

21. Record the date and time of retrieval in the log sheet for each detector. Do the same for *duplicates and blanks.*

22. Record the name of the person placing/retrieving test detectors in the space provided at the end of each log sheet.

Preparing Detectors for Analysis

Limited License, CRCPD National Radon Training Meeting, September 28, 2014, Not for Reprint or Resale.

ED_006395_00002031-00160

23. The laboratory analyzing the detectors should not be able to recognize *blanks* or *duplicates*. For example, after retrieving the exposed detectors, *blank* detectors must be mixed in with the exposed detectors for shipment. Consult with the manufacturer/laboratory to insure detector-specific procedures approved by the manufacturer/laboratory are used when conducting blank measurements. If appropriate, seals on the blanks might be broken (in some cases, the detector would be opened and immediately closed) and resealed in the same manner as the deployed detectors. Log sheets provided to the laboratory should also obscure which detectors are *blanks* and *duplicates*.

24. Ensure detectors are delivered to the analyzing laboratory within their stated timeframe.

Preparing Report Documents

25. Compile test data into a report form (See Section III, subsection 8).

Limited License, CRCPD National Radon Training Meeting, September 28, 2014, Not for Reprint or Resale.

ED_006395_00002031-00161

EXHIBIT 1-a
EXAMPLES: GROUND CONTACT TEST LOCATIONS

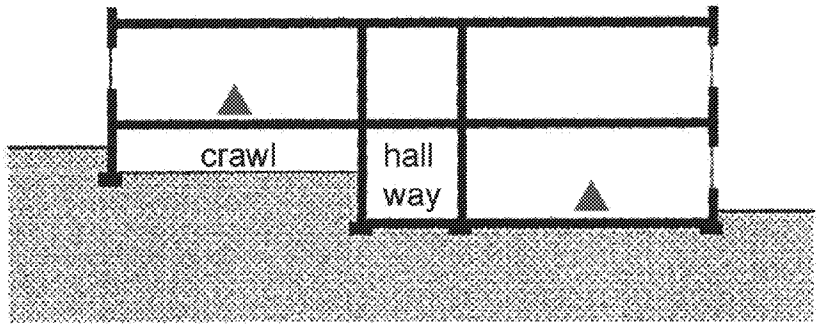

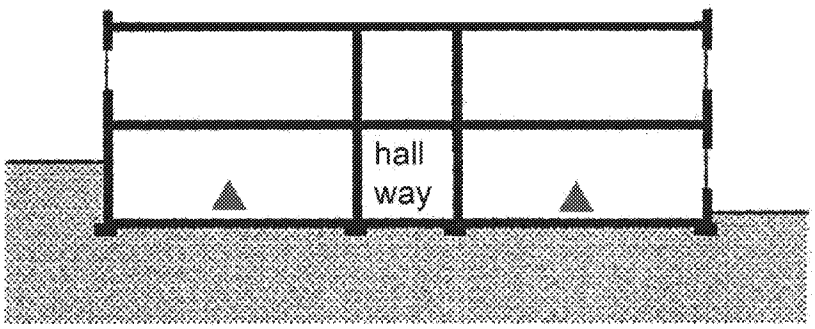

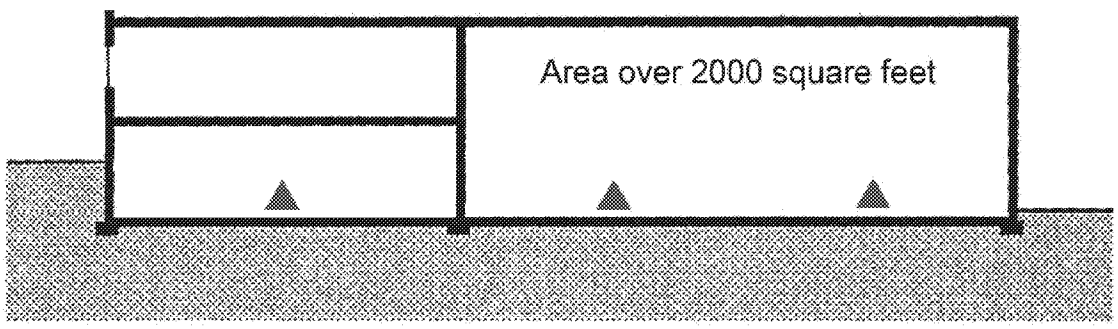

Detectors must be placed at least 20" (50 centimeters) above the floor. For large rooms or open areas – Place one detector every 2,000 square feet (186 square meters) (e.g., a square area with each side 45 feet (13.7 meters) in length). See Section III, 3.0 "Where to Test" including 3.6 "Choosing a location within a Room" for other details.

Limited License, CRCPD National Radon Training Meeting, September 28, 2014, Not for Reprint or Resale.

EXHIBIT 1-b
EXAMPLES: GROUND CONTACT TEST LOCATIONS

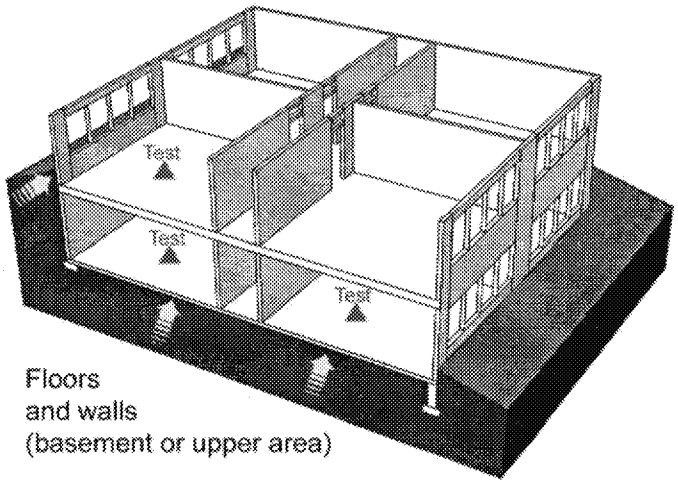

Floors
and walls
(basement or upper area)

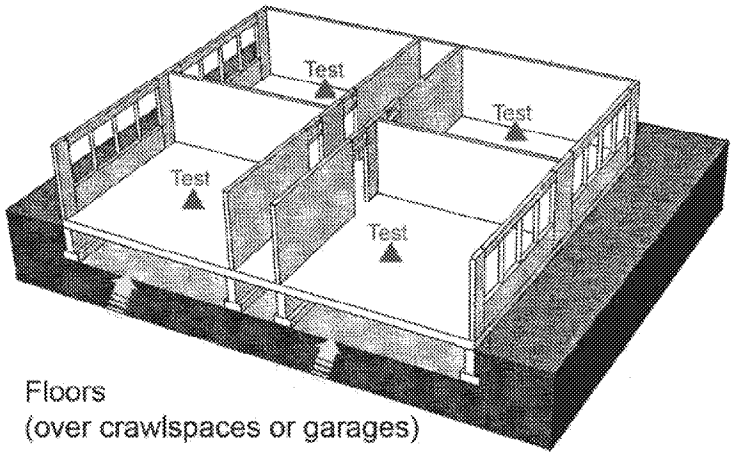

Floors
(over crawlspaces or garages)

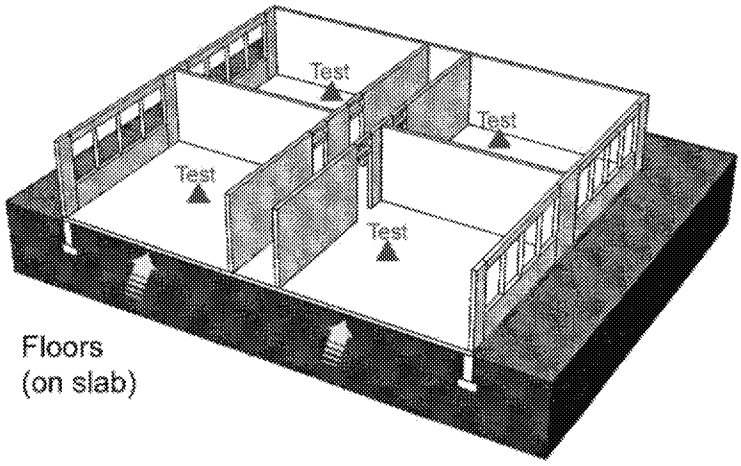

Floors
(on slab)

Detectors must be placed at least 20" (50 centimeters) above the floor. For large rooms or open areas – Place one detector every 2,000 square feet (186 square meters) (e.g., a square area with each side 45 feet (13.7 meters) in length). See Section III, 3.0 "Where to Test" including 3.6 "Choosing a location within a Room" for other details.

Limited License, CRCPD National Radon Training Meeting, September 28, 2014, Not for Reprint or Resale.

EXHIBIT 1-c
EXAMPLE: UPPER FLOOR TEST LOCATIONS

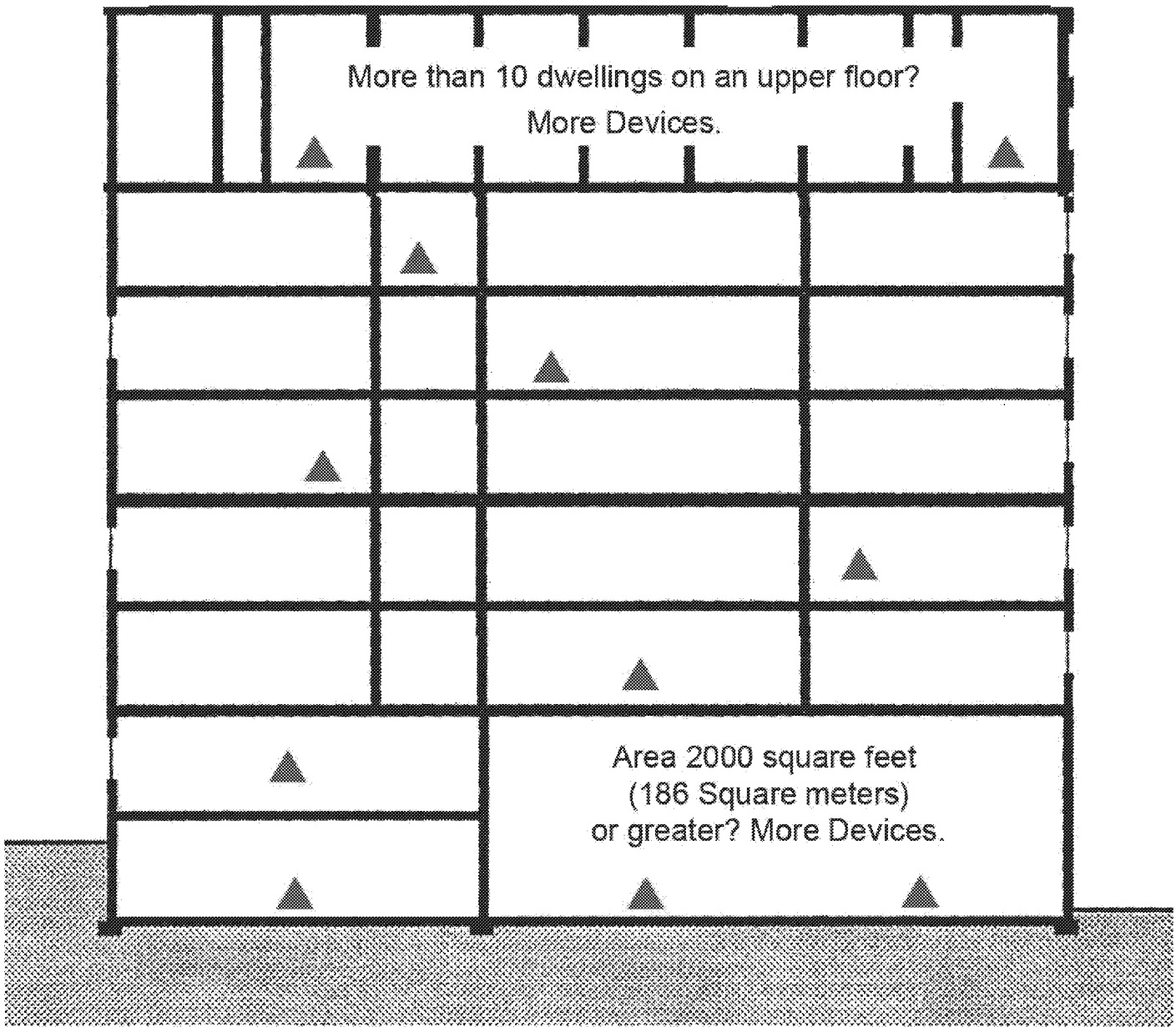

Detectors must be placed at least 20" (50 centimeters) above the floor. For large rooms or open areas – Place one detector every 2,000 square feet (186 square meters) (e.g., a square area with each side 45 feet (13.7 meters) in length). See Section III, 3.0 "Where to Test" including 3.6 "Choosing a location within a Room" for other details.

Limited License, CRCPD National Radon Training Meeting, September 28, 2014, Not for Reprint or Resale.

EXHIBIT 1-d
HEATING, COOLING AND VENTILATION SYSTEMS:

Group 1: Basic Heating and Cooling:

A dedicated system for each dwelling that does not supply additional fresh air for ventilation.

HAC: Many Multifamily buildings have forced-air heating and air conditioning (HAC) systems for each dwelling (such as normally seen in single-family residences) that do not supply additional fresh air for ventilation.

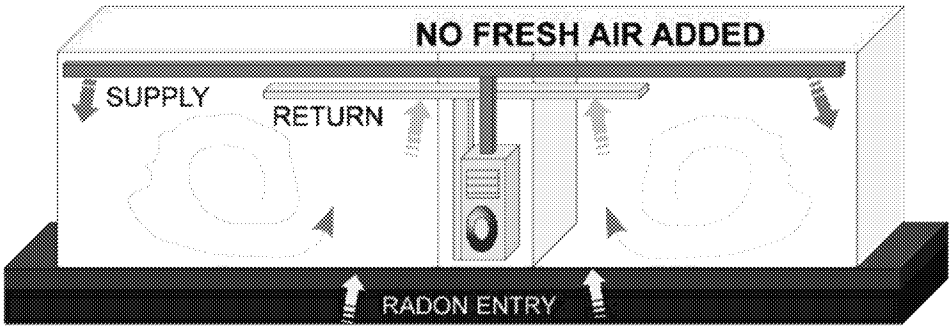

Ductless Systems:

Some Multifamily buildings have dwellings where systems do not have forced-air distribution.

- **Non-Forced-Air Hot and Cold Water Circulation** (sometimes referred to as radiator systems).
- **Window and Unit Ventilators** (sometimes referred to as a through the wall package units).
- **Wall or Baseboard Heating/Cooling Systems.**
- **Ductless Split Systems** with one unit for cooling and another unit for heat (i.e. Window AC for cooling and Baseboard or Wall units for heat).

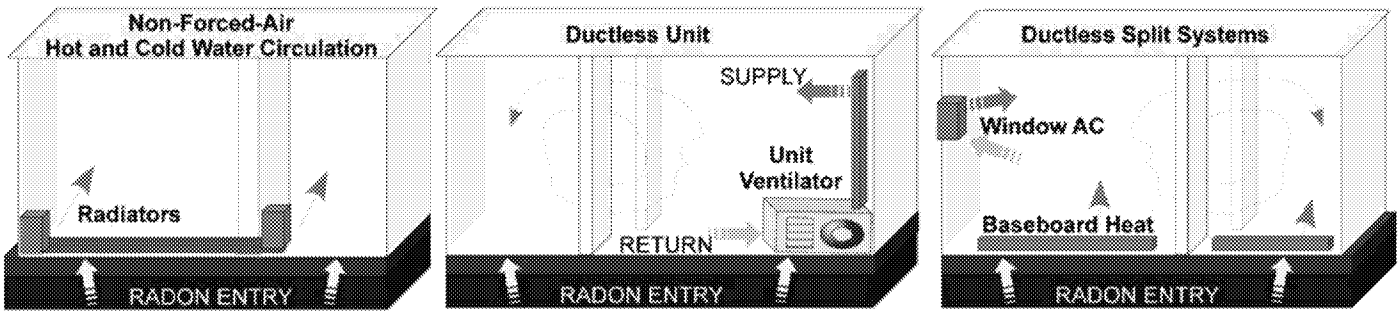

Group 2: Multi-zone systems

- **Multi-zone systems** are those where different air handlers or systems are employed and independently controlled for different areas within the same dwelling. Such configurations may have been designed originally or added due to modifications of a building or use of an area. Radon concentrations can vary widely room to room based upon variances in system operations.

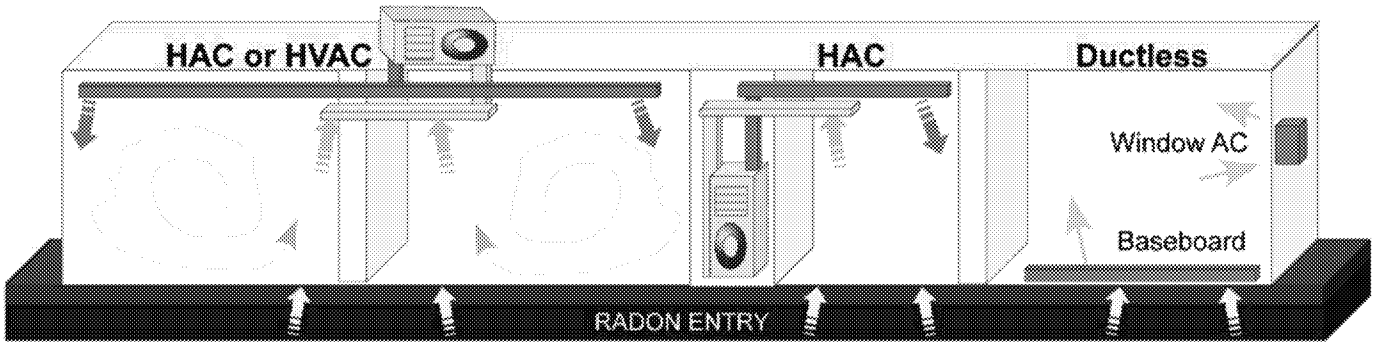

Limited License, CRCPD National Radon Training Meeting, September 28, 2014, Not for Reprint or Resale.

EXHIBIT 1-e

(CONTINUED) HEATING, COOLING AND VENTILATION SYSTEMS:

Group 3: Variable Air Distribution and Ventilation

The normal operation of these systems can cause changes in distribution of radon or fresh air ventilation and can also affect pressure relationships that can enhance or diminish radon entry. Depending upon the open or closed operating conditions for supply vents, returns and dilution (if applicable), radon concentrations can vary widely from test to test (or room to room).

Variable Air Distribution: Systems where the airflow from a single air handler is distributed to multiple dwellings or locations with independent controls within each dwelling for duct dampering. Such systems include Variable Air Volume (VAV) systems or systems with fixed volume return vents in each room and controls for dampering supply air.

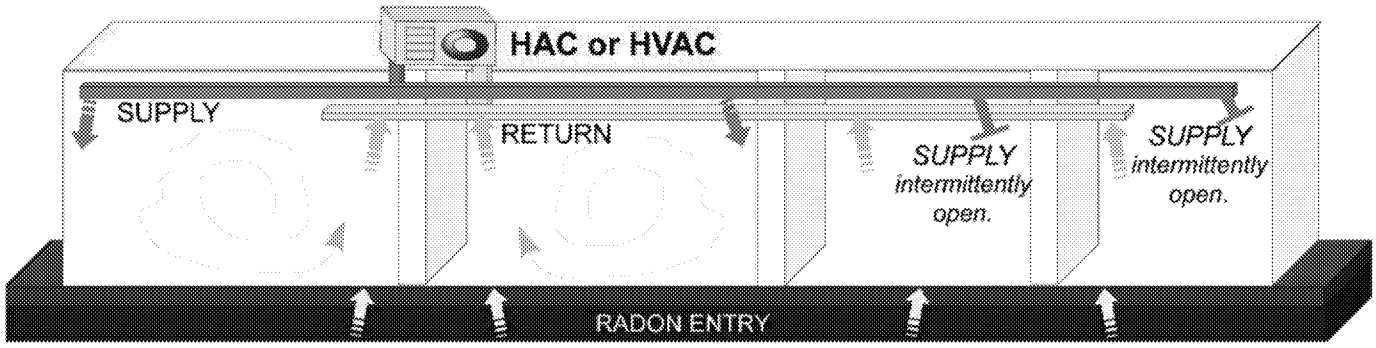

Fresh Air Ventilation (HVAC): (Heating, Ventilation and Air Conditioning):

Some Multifamily buildings have heating, ventilating and air conditioning (HVAC) systems that add fresh air ventilation to dwellings.

Such systems may exist for service to a whole building, multiple dwellings or as single unit ventilators.

Radon concentrations can vary widely from test to test based the volume of fresh air supplied to a dwelling or room at any given time.

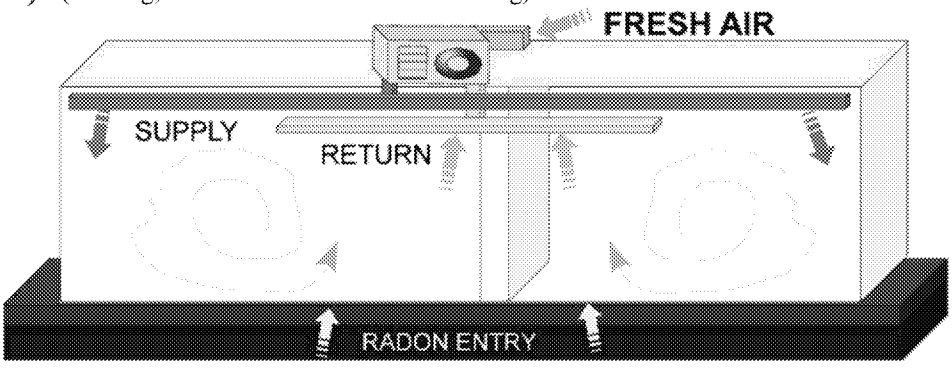

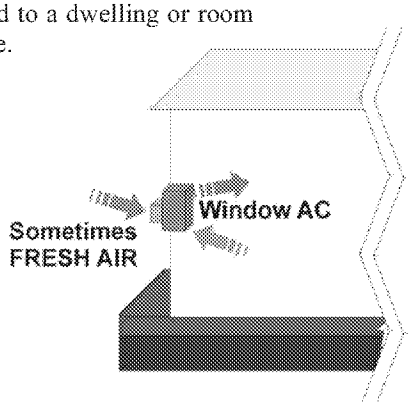

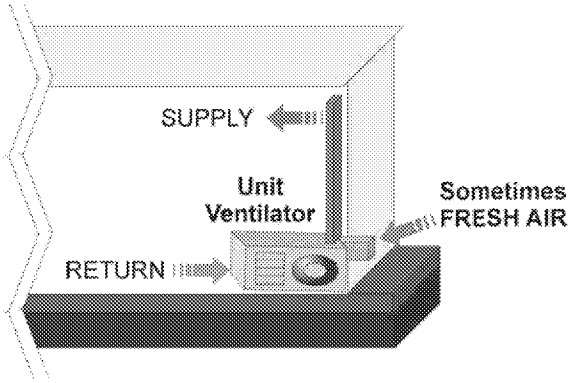

Limited License, CRCPD National Radon Training Meeting, September 28, 2014, Not for Reprint or Resale.

EXHIBIT 2
EXAMPLE: FLOOR PLAN DRAWING/LOG

"X" = Detectors
"D" = Duplicate Detectors
"B" = Field Blank Detectors

Add additional notation as appropriate (i.e. mechanical system notes and continuous or long-term detectors).

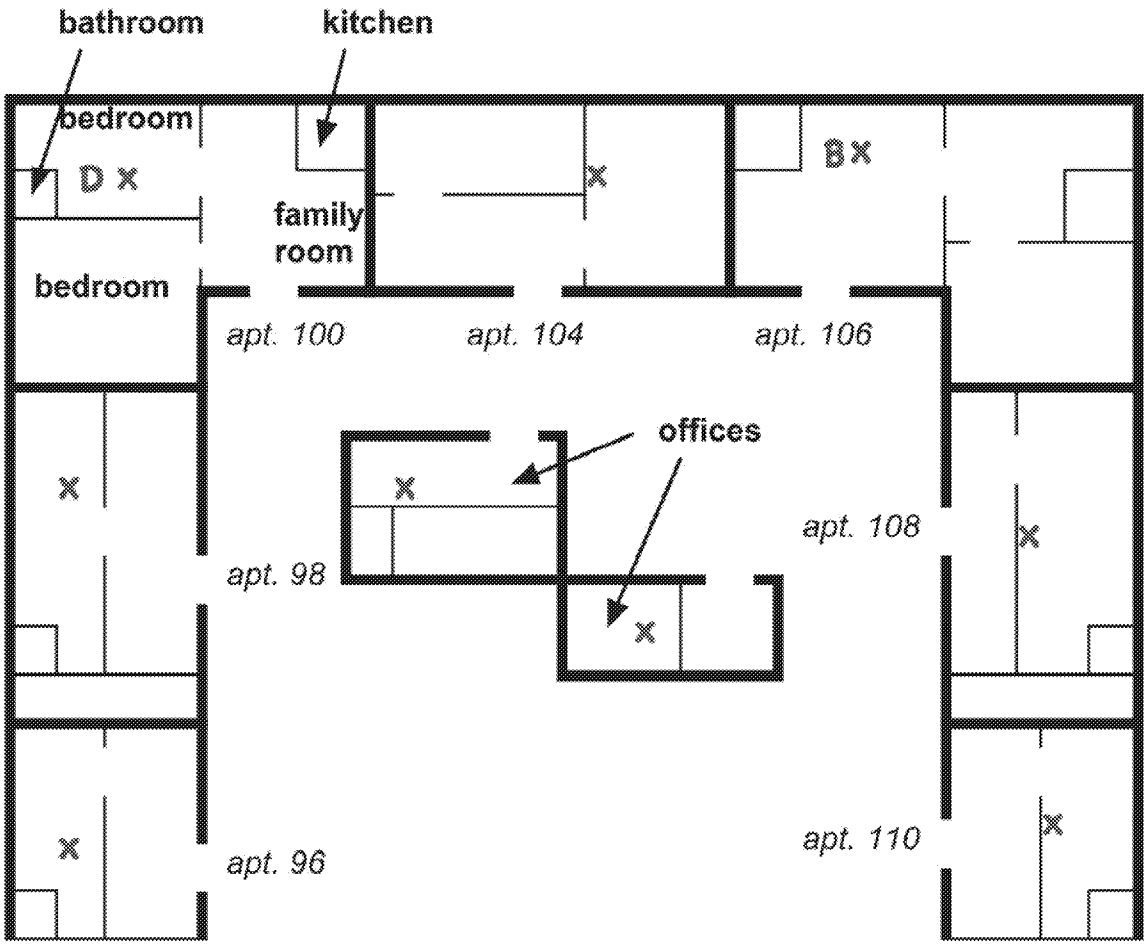

Limited License, CRCPD National Radon Training Meeting, September 28, 2014, Not for Reprint or Resale.

Blank Page

EXHIBIT 3

SAMPLE: CHAIN-OF-CUSTODY / DATA LOG

This form is an example and not intended to prescribe all manners that may be desired or required for tracking.

Form# _____ **/ Rev#** _____ **/ Effective Date** _____

Building Name: _____ **Testing Contractor:** _____

Address: _____ **Contractor Phone:** _____

_____ **Contractor Address:** _____

Contact Name: _____ _____

Contact Phone: _____ _____

Serial Number	Apartment / Room No.	Room	Placement Location	Start Date	Start Time	Stop Date	Stop Time	Floor	Comments	Tech. Place	Tech. PU

Indicate Time Standard used: [ ]AM-PM [ ]Military **Time Zone:** _____

Technician _____ Initials _____ License# _____
Technician _____ Initials _____ License# _____
Technician _____ Initials _____ License# _____

"D" = Duplicate
"B" = Blank
"S" = Spike

Limited License, CRCPD National Radon Training Meeting, September 28, 2014, Not for Reprint or Resale.

EXHIBIT 4

EXAMPLE OF DATA ENTRY: CHAIN-OF-CUSTODY / LOG

This form is an example and not intended to prescribe all manners that may be desired or required for tracking.

Form# RT1001 / Rev# 2 / Date 09-20-06

Management or Radon Company

Building Name: _____ **Testing Contractor:** _____

Address: _____ **Contractor Phone:** _____

_____ **Contractor Address:** _____

Contact Name: _____ _____

Contact Phone: _____ _____

Serial Number	Apartment / Room No.	Room	Placement Location	Start Date	Start Time	Stop Date	Stop Time	Floor	Comments	Tech. Place	Tech. PU
12345	100	Family	S Wall	2/5/2008	11:00 a.m.	2/9/2008	11:30 a.m.	1		SH	SH
12346	100	Family	S Wall - D	2/5/2008	11:02 a.m.	2/9/2008	11:30 a.m.	1		SH	SH
12347	104	Family	S Wall	2/5/2008	11:08 a.m.	2/9/2008	11:35 a.m.	1		SH	SH
12348	106	Family	S Wall	2/5/2008	11:14 a.m.	2/9/2008	11:37 a.m.	1	D	SH	SH
12349	106	Bedroom	B	2/5/2008	11:15 a.m.	2/9/2008	11:37 a.m.	1		SH	SH
12350	108	Family	N Wall	2/5/2008	11:22 a.m.	2/9/2008	11:40 a.m.	1	Detector was moved	SH	SH
12351	110	Bedroom	Night Stand	2/5/2008	11:25 a.m.	2/9/2008	11:42 a.m.	1		SH	SH
12352	112	Family	Bookshelf	2/5/2008	11:30 a.m.	2/9/2008	11:45 a.m.	1	B	SH	SH
12353	114	Living	N Wall	2/5/2008	11:33 a.m.	2/9/2008	11:50 a.m.	1		GJ	SH
12354	116	Family	E Wall	2/5/2008	11:39 a.m.	2/9/2008	11:53 a.m.	1		GJ	SH
12355	118	Living	E Wall	2/5/2008	11:42 a.m.	2/9/2008	11:56 a.m.	1	D	GJ	SH
12356	120	Bedroom	Dresser	2/5/2008	11:45 a.m.	2/9/2008	12:00 p.m.	1	Window Open	GJ	SH
12357	202	Family	S Wall	2/5/2008	11:55 a.m.	2/9/2008	12:08 p.m.	2		GJ	SH
12358	212	Family	Corner Table	2/5/2008	12:00 p.m.	2/9/2008	12:11 p.m.	2		GJ	SH
12359	306	Living	S Wall	2/5/2008	12:04 p.m.	2/9/2008	12:15 p.m.	3		GJ	SH
12360	318	Bedroom	E Wall	2/5/2008	12:08 p.m.	2/9/2008	12: 18 p.m.	3		GJ	SH
12361	318	Bedroom	E Wall - D	2/5/2008	12:10 p.m.	2/9/2008	12:18 p.m.	3		GJ	SH

Indicate Time Standard used: [X]**AM-PM** [ ]**Military** **Time Zone:** Central Daylight

Technician George Jackson Initials GJ License# G100225

Technician Sam Hayes Initials SH License# G107809

Technician _____ Initials _____ License# _____

"D" = Duplicate
"B" = Blank
"S" = Spike

Limited License, CRCPD National Radon Training Meeting, September 28, 2014, Not for Reprint or Resale.

EXHIBIT 5
SAMPLE: NOTICE OF INSPECTION

Management or Radon Company
Anytown, USA 800-000-0000

Dear Resident,

Radon gas is the second leading cause of lung cancer and the leading cause of lung cancer in non-smokers in the U.S. Radon is a naturally occurring radioactive gas that can be present in some homes at concentrations that are dangerous to you, your family and pets.

An important step is being taken to lower your risk of lung cancer. A radon test is being scheduled for the property.

It is important that we can gain access to place test detectors and that required test conditions are maintained.

Required Closed-building conditions

- Closed-building conditions must be maintained for 12 hours prior to the initiation of the test and during the test.
- All windows on all levels and external doors must be kept closed (except for momentary events such as normal entry and exit) before and during the test period.
- Heating and cooling systems must be set to normal occupied operating temperatures and their fan/blower controls must be set to normal intermittent activity unless continuous activity is a permanent setting. Window air conditioning units must only be operated in a recirculating mode. Equipment that supplies fresh air to the dwelling must be deactivated except for make-up air to combustion appliances.
- Whole house fans must not be operated. Window fans should be removed or sealed shut. Wood burning fireplaces must not be operated unless they are the primary sources of heat for the dwelling. Avoid excessive operation of clothes dryers, range hoods, bathroom fans and other mechanical systems that draw air out of the building.

Tentative detector placement Day _____ Date_____ Time_____

We will request your signature and any comments on a form left with the test detector.

Tentative detector pick-up Day _____ Date_____ Time_____

Test detectors are not dangerous in any way and a sample test detector is available for you to examine at _____. Copies of EPA's *A Citizen's Guide to Radon* are available upon request or you can contact your State Radon Office (http://www.epa.gov/radon/whereyoulive.html) or EPA regional office for additional information on radon.

If you have independently conducted radon testing in your residence or have any questions, please contact:
Contact Person: _____Phone: _____

We thank you for your cooperation in helping to ensure safe and healthy homes.

Sincerely,

Management or Radon Company, Anytown, USA

Limited License, CRCPD National Radon Training Meeting, September 28, 2014, Not for Reprint or Resale.

EXHIBIT 6
SAMPLE COMPLIANCE STATEMENT

Radon Survey in Progress

Management or Radon Company
Anytown, USA 800-000-0000

Dear Resident,

Radon gas is the second leading cause of lung cancer and the leading cause of lung cancer in non-smokers in the U.S. **Radon is a naturally occurring radioactive gas that can be present in some homes at concentrations that are dangerous to you, your family and pets.**

An important step is being taken to lower your risk of lung cancer from radon in your home. A radon test is being scheduled for the property.

It is important that required test conditions stated below are maintained.

Please sign this form and add any comments to help ensure accurate tests:

To the best of my knowledge, the required conditions stated below were kept during the test.

Occupant X_____ **Date** _____

Address: _____

Comments if any: _____

_____

Please leave this form with the test kit or return to: _____

Detector Placed Day_____Date _____Time_____

Detector Pick-up Day_____Date _____Time_____

Required Closed-building conditions

- Closed-building conditions must be maintained for 12 hours prior to the initiation of the test and during the test.
- All windows on all levels and external doors must be kept closed (except for momentary events such as normal entry and exit) before and during the test period.
- Heating and cooling systems must be set to normal occupied operating temperatures and their fan/blower controls must be set to normal intermittent activity unless continuous activity is a permanent setting. Window air conditioning units must only be operated in a recirculating mode. Equipment that supplies fresh air to the dwelling must be deactivated except for make-up air to a combustion appliance.
- Whole house fans must not be operated. Window fans should be removed or sealed shut. Wood burning fireplaces must not be operated unless they are the primary sources of heat for the dwelling. Avoid excessive operation of clothes dryers, range hoods, bathroom fans and other mechanical systems that draw air out of the building.

For any questions or concerns, please contact: _____Phone: _____

We thank you for your cooperation in helping to ensure safe and healthy homes.

Sincerely,
Management or Radon Company, Anytown, USA

Limited License, CRCPD National Radon Training Meeting, September 28, 2014, Not for Reprint or Resale.

EXHIBIT 7
SAMPLE ONSITE NOTICE OR PUBLIC NOTICE SIGN

Radon Survey in Progress

Management or Radon Company
Anytown, USA 800-000-0000

Dear Residents,

Radon gas is the second leading cause of lung cancer and the leading cause of lung cancer in non-smokers in the U.S. **Radon is a naturally occurring radioactive gas that can be present in some homes at concentrations that are dangerous to you, your family and pets.**

An important step is being taken to lower your risk of lung cancer from radon in your home. A radon test is being scheduled for the property.

It is important that required test conditions stated below are maintained throughout the building.

Test Deployment: Day_____Date _____Time_____

Test Pick-up: Day_____Date _____Time_____

Required Closed-building conditions

- Closed-building conditions must be maintained for 12 hours prior to the initiation of the test and during the test.
- All windows on all levels and external doors must be kept closed (except for momentary events such as normal entry and exit) before and during the test period.
- Heating and cooling systems must be set to normal occupied operating temperatures and their fan/blower controls must be set to normal intermittent activity unless continuous activity is a permanent setting. Window air conditioning units must only be operated in a recirculating mode. Equipment that supplies fresh air to the dwelling must be deactivated except for make-up air to a combustion appliance.
- Whole house fans must not be operated. Window fans should be removed or sealed shut. Wood burning fireplaces must not be operated unless they are the primary sources of heat for the dwelling. Avoid excessive operation of clothes dryers, range hoods, bathroom fans and other mechanical systems that draw air out of the building.

If you have independently conducted radon testing in your residence or have any questions, please contact:
Contact Person: _____Phone: _____

Copies of EPA's *A Citizen's Guide to Radon* are available upon request or you can contact your State Radon Office (http://www.epa.gov/radon/whereyoulive.html) or EPA regional office for additional information on radon.

We thank you for your cooperation in helping to ensure safe and healthy homes.

Sincerely,

Management or Radon Company, Anytown, USA

Limited License, CRCPD National Radon Training Meeting, September 28, 2014, Not for Reprint or Resale.

EXHIBIT 8
SAMPLE NOTICE OF INSPECTION - NONTESTED DWELLINGS

Management or Radon Company
Anytown, USA 800-000-0000

Dear Resident,

Radon gas is the second leading cause of lung cancer and the leading cause of lung cancer in non-smokers in the U.S. Radon is a naturally occurring radioactive gas that can be present in some buildings at concentrations that are dangerous to you, your family and pets.

An important step is being taken to lower the risk of lung cancer from radon to residents in this building. A radon test is being scheduled for the lower floors where radon is normally found.

Radon test detectors will be placed in the lower areas of the building for several days. Other strategic locations may also be chosen. Test detectors are not dangerous in any way and a sample test detector is available for you to examine at _____. Copies of EPA's *A Citizen's Guide to Radon* are available upon request or you can contact your State Radon Office (http://www.epa.gov/radon/whereyoulive.html) or EPA regional office for additional information on radon.

Even though ground contact areas are typically tested for an initial assessment, protocols recommend and encourage that you consider testing your own dwelling for personal verification of low radon exposures. Inexpensive home test detectors are readily available. This can be done during these tests or in the future when the following Closed-building conditions are a normal condition for the building.

Required Closed-building conditions

- Closed-building conditions must be maintained for 12 hours prior to the initiation of the test and during the test.
- All windows on all levels and external doors must be kept closed (except for momentary events such as normal entry and exit) before and during the test period.
- Heating and cooling systems must be set to normal occupied operating temperatures and their fan/blower controls must be set to normal intermittent activity unless continuous activity is a permanent setting. Window air conditioning units must only be operated in a recirculating mode. Equipment that supplies fresh air to the dwelling must be deactivated except for make-up air to combustion appliances.
- Whole house fans must not be operated. Window fans should be removed or sealed shut. Wood burning fireplaces must not be operated unless they are the primary sources of heat for the dwelling. Avoid excessive operation of clothes dryers, range hoods, bathroom fans and other mechanical systems that draw air out of the building.

Even though test detectors may not be placed in your dwelling, it is important that required test conditions are maintained throughout the building.

Tentative detector placement Day_____ Date _____Time_____

Tentative detector pick-up Day_____ Date _____Time_____

We will request your signature and any comments on a form left during the test.

If you have independently conducted radon testing in your residence or have any questions, please contact:
Contact Person: _____Phone: _____

We thank you for your cooperation in helping to ensure safe and healthy homes.
Sincerely,
Management or Radon Company, Anytown, USA

EXHIBIT 9
SAMPLE COMPLIANCE STATEMENT - NONTESTED DWELLING

Limited License, CRCPD National Radon Training Meeting, September 28, 2014, Not for Reprint or Resale.

Radon Survey in Progress

Management or Radon Company
Anytown, USA 800-000-0000

Dear Resident,

Radon gas is the second leading cause of lung cancer and the leading cause of lung cancer in non-smokers in the U.S. Radon is a naturally occurring radioactive gas that can be present in some homes at concentrations that are dangerous to you, your family and pets. An important step is being taken to lower your risk of lung cancer from radon in your home.

A radon test is being scheduled in the lowest areas of the building. Even though detectors may not be placed in your dwelling, it is important that required test conditions stated below are maintained.

Please sign this form and add any comments to help ensure accurate tests:

To the best of my knowledge, the required conditions stated below were kept during the test.

Occupant X_____ **Date** _____

Address: _____

Comments if any: _____

_____

Please leave this form in an accessible location or return to: _____

Tests will begin: Day_____Date _____Time_____

Tests will end: Day_____Date _____Time_____

Required Closed-building conditions

- Closed-building conditions must be maintained for 12 hours prior to the initiation of the test and during the test.
- All windows on all levels and external doors must be kept closed (except for momentary events such as normal entry and exit) before and during the test period.
- Heating and cooling systems must be set to normal occupied operating temperatures and their fan/blower controls must be set to normal intermittent activity unless continuous activity is a permanent setting. Window air conditioning units must only be operated in a recirculating mode. Equipment that supplies fresh air to the dwelling must be deactivated except for make-up air to a combustion appliance.
- Whole house fans must not be operated. Window fans should be removed or sealed shut. Wood burning fireplaces must not be operated unless they are the primary sources of heat for the dwelling. Avoid excessive operation of clothes dryers, range hoods, bathroom fans and other mechanical systems that draw air out of the building.

NOTE: Even though ground contact areas are typically tested for an initial assessment, protocols recommend and encourage that you consider testing your own dwelling for personal verification of low radon exposures. Inexpensive home test detectors are readily available. This can be done during these tests or in the future when the above Closed-building conditions are a normal condition for the building.

If you have independently conducted radon testing in your residence or have any questions, please contact:
Contact Person: _____Phone: _____

We thank you for your cooperation in helping to ensure safe and healthy homes.
Sincerely,
Management or Radon Company, Anytown, USA

Limited License, CRCPD National Radon Training Meeting, September 28, 2014, Not for Reprint or Resale.

Blank Page

Deep appreciation is deserved for those who have volunteered long hours for several years towards revision of this document.

Voting members bore most of the weight in review, contributions and deliberation until consensus was achieved. Each personal vantage point contributed unique perspectives to help forge a more perfect document.

With deep appreciation, we honor their names:

Protocol for Conducting Radon and Radon Decay Product Measurements In Multifamily Buildings

AARST CONSORTIUM On National Radon Standards

CHAIR – Trudy Smith

Facilitating Editor – Gary Hodgden

AUTHORIZED CONSORTIUM VOTING DELEGATES

EDUCATORS	Jack Hughes (No alternate at this time)
REGULATED STATES	Cindy Ladage (Patrick Daniels alternate)
NON- REGULATED STATES	Jim McNees (Adrian Howe alternate)
PROFICIENCY PROGRAM	Shawn Price (Angel C. Price alternate)
HOME INSPECTORS (ASHI)	Steve Gladstone (Tim Tucker alternate)
MEASUREMENT PROFESSIONALS	William Levy (Debbie Kalina alternate)
MITIGATION PROFESSIONALS	Dave Wilson (No alternate at this time)
Manufacturer	Martin Smith (Carolyn K. Allen alternate)
Chambers	Phillip H. Jenkins (James Burkhart alternate)
Federal: EPA (non-voting)	Phil Jalbert (No alternate at this time)

Limited License, CRCPD National Radon Training Meeting, September 28, 2014, Not for Reprint or Resale.

ED_006395_00002031-00177

Blank Page

AARST CONSORTIUM ON NATIONAL RADON STANDARDS
www.radonstandards.us
standards@aarst.org

WWW.AARST.ORG

Copyright © 2010 AARST, P.O. Box 2109, Fletcher, NC 28732