LUDLUM MODEL 2241
SURVEY METER

June 2015

Serial Number 238822 and Succeeding

Serial Numbers

LUDLUM MODEL 2241
SURVEY METER

June 2015

Serial Number 238822 and Succeeding

Serial Numbers

LUDLUM MEASUREMENTS, INC
501 OAK STREET, P.O. BOX 810
SWEETWATER, TEXAS 79556
325-235-5494, FAX: 325-235-4672

Table of Contents

Introduction **1**

Getting Started **2**

Unpacking and Repacking **2-1**

Battery Installation **2-1**

Operational Check **2-2**

Specifications **3**

Instrument **3-1**

Removable Switchboard Adjustable Parameters **3-2**

Identification of Controls and Functions **4**

Display **4-1**

Display Status Definitions **4-1**

Front Panel Controls **4-2**

Front Panel Calibration Controls **4-3**

Main Board Controls **4-4**

Switch Board Controls **4-5**

Safety Considerations **5**

Environmental Conditions for Normal Use **5-1**

Detector Connector **5-1**

Warning Markings and Symbols **5-1**

Maintenance **6**

Recalibration **6-1**

Batteries **6-2**

Technical Theory of Operation **7**

Main Board **7-1**

Switch Board **7-3**

Display Board **7-3**

Instrument Setup **8**

Entering or Changing Switch Board Parameters **8-1**

The Function Switch 8-1
Function Switch Position Descriptions and Variables 8-2
Loading Default Parameters 8-7
Calibration 8-7
General Detector Setup Information 8-8
Counts per minute (C/m) Calibration 8-9
R/hr Calibration 8-11
Determining CC and DTC 8-12
Detector Overload (OVL) Calibration 8-19
Software License Agreement 8-21

Recycling ***9***

Parts List ***10***
Model 2241 Survey Meter 10-1
Main Circuit Board, Drawing 408 × 223 10-1
Calibration Board, Drawing 408 × 12 10-3
Display Board, Drawing 408 × 259 10-3
Switch Board, Drawing 408 × 45 10-4
Chassis Wiring Diagram, Drawing 408 × 103 10-4

Drawings and Diagrams ***11***

RS-232 Output Formats - Appendix A ***A***
Binary Output Format A-1
ASCII Output Format A-4

ED_006395_00000168-00004

Section 1

Introduction

The Model 2241 is a portable microprocessor-based digital scaler/ratemeter designed for use with scintillation, Geiger-Mueller (GM), and proportional type detectors to measure ionizing radiation. Data is presented on a four-digit (six digits in the Scaler mode) Liquid Crystal Display (LCD) with moving decimal point. A three-position switch labeled OFF/RATEMETER/SCALER selects the desired operating mode for the instrument.

Programmable display units (RATEMETER mode only) are represented in either R/hr, Sv/h, cpm, or cps with multipliers of micro (μ) or milli (m) for R/hr and Sv/h and kilo (k) for cpm or cps. The display units are auto-ranging, enabling the readout to display a broad range of radiation levels. The display also offers lower limit capability. For example, the display can be set to show only values that are greater than or equal to1 μR/hr.

This instrument incorporates independent adjustable alarms for RATEMETER and SCALER operating modes. The RATEMETER mode has two alarm indicators. The first-level alarm is indicated by display of the word "ALERT" on the LCD. The second-level alarm is indicated by display of the word "ALARM" and by the emitting of a continuous audible tone. The SCALER alarm condition will also display the word "ALARM" and produce the same audible tone. Both audible alarms may be silenced (acknowledged) by depressing the RESET switch. All alarms are concurrent.

Other features include Dead Time Correction (DTC) to compensate for detector dead time; audible click-per-event with programmable 1, 10, 100, and 1000 divide-by; LCD backlight with programmable "ON" time; programmable fixed or variable response time; and count overflow visual alarm, indicating that the counting circuitry is nearing the maximum counting capability.

ED_006395_00000168-00005

All of the features described above may be programmed manually using the internal switch board or by computer through the RS-232 port. Two different detector operating parameters may be stored in non-volatile memory. The switch board can be removed after entering or changing parameters to prevent tampering with setup parameters.

A regulated high-voltage power supply, set-point control adjustable from 400 to 2400 volts with detector overload detection, and adjustable discrimination levels add versatility to the instrument. This supports operation for a broad range of detectors and connecting cable lengths. All of the calibration controls are covered to prevent any inadvertent adjustments to the detector operating parameters.

The instrument is powered by two standard "D" cell batteries. The unit body is made of cast-and-drawn aluminum with beige powder coating, which aids in the decontamination of surfaces.

ED_006395_00000168-00006

Section 2

Getting Started

Unpacking and Repacking

Remove the calibration certificates and place them in a secure location. Remove the instrument, detectors, and accessories (batteries, cable, etc.), and ensure that all of the items listed on the packing list are in the carton. Check individual item serial numbers and ensure calibration certificates match. The Model 2241 serial number is located on the front panel below the battery compartment. Most Ludlum Measurements, Inc. detectors have a label on the base or body of the detector for model and serial number identification.

Important!

If multiple shipments are received, ensure that the detectors and instruments are not interchanged. Each instrument is calibrated to a specific detector(s), and is therefore not interchangeable.

To return an instrument for repair or calibration, provide sufficient packing material to prevent damage during shipment. Also provide appropriate warning labels to ensure careful handling.

Every returned instrument must be accompanied by an **Instrument Return Form**, which can be downloaded from the Ludlum website at www.ludlums.com. Find the form by clicking the "Support" tab and selecting "Repair and Calibration" from the drop-down menu. Then choose the appropriate Repair and calibration division where you will find a link to the form.

Battery Installation

Ensure the OFF/SCALER/RATEMETER switch is in the OFF position. Open the battery lid by turning the quarter-turn thumb screw counterclockwise.

ED_006395_00000168-00007

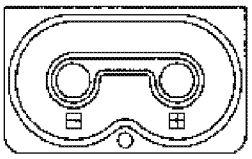

Install two "D" size batteries in the compartment. Note the (+) and (–) marks inside the battery door. Match the battery polarity to these marks. Close the battery box lid.

Note:

The center post of a "D" size battery is positive.

Operational Check

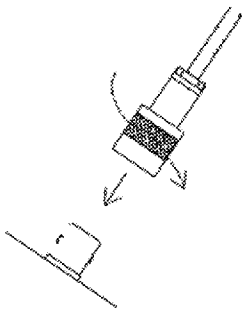

Connect a detector to the Model 2241 by using the cable provided; firmly pushing the connectors together while twisting clockwise until the connector latches (one-quarter turn). The diagram to the left illustrates how this is done.

Turn the OFF/SCALER/RATEMETER switch to the RATEMETER position. Notice that the display goes through an initialization sequence. The display will show all 8s with decimal points. Check to make sure all segments display, as illustrated in the diagram to the left.

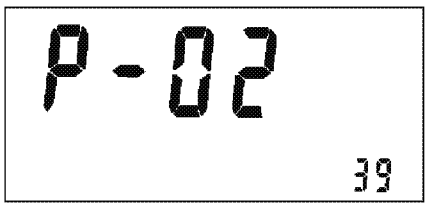

The LCD then displays the firmware number in the format "P-XX YY." The "XX" is the firmware number, and the "YY" is the firmware version. (The figure to the left is for example only; to illustrate location of display.)

The minimum displayable value (for example 00.0 µR/hr) should be shown. When switched to the SCALER position, a single 0 will be displayed.

The display will auto range to the current level (see figure at left). When auto ranging down, the Model 2241 uses multiples of 5. This technique keeps the decimal point from jumping between numbers when viewing values around multiples of 10.

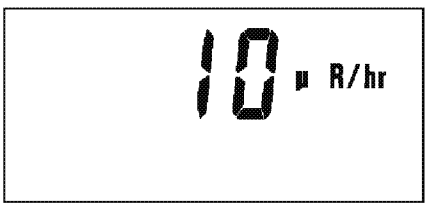

Check for a proper background reading:

If using a Ludlum Model 44-9 detector, a typical reading would be 25-50 cpm or 8-15 uR/hr.

If using a Ludlum Model 44-2 detector, a typical reading would be 1.4-2.6 kcpm or 8-15 uR/hr.

A reference reading (or readings) with a check source should be obtained with the detector(s) in a constant and reproducible manner at the time of

ED_006395_00000168-00008

calibration or at the time the instrument is received in the field.

If at any time the instrument fails to read within 20% of the reference reading when using the same check source, it should be sent to a calibration facility for recalibration and/or repair. If desired, multiple readings may be taken at different distances and/or with different sources so that other ranges or scales are checked.

Switch the AUD ON/OFF switch to the ON position and confirm that the external unimorph speaker produces an audible click for each event detected (audio divide by 1 parameter). The AUD ON/OFF switch will silence the clicks if in the OFF position; however, an audible alarm condition will still be heard.

Increase the source activity or lower the alert and alarm points to initiate an ALERT and ALARM condition. (Refer to section 8, "Entering or Changing Switchboard Parameters.") Depress the RESET switch to acknowledge the audible alarm. Decrease the radiation activity below the ALERT and ALARM threshold and depress the RESET switch to clear the alarm conditions. If an alarm condition is not present, depressing the RESET switch the first time will reset the alert condition and zero the ratemeter.

Position a check source to produce a ratemeter reading of 100 to 2000 counts/minute or 10-100 μR/hr. While observing the ratemeter fluctuations, select between the fast and slow response time (F/S) positions to observe variations in the display. The "S" position should respond approximately five times slower than the "F" position (for fixed response mode) and three times slower when in variable response mode. The slow response position is normally used when the Model 2241 is displaying low numbers, which require a more stable display. The fast response position is used at high count levels.

Move the OFF/SCALER/RATEMETER switch to the SCALER position. Depress the COUNT switch located in the end of the carrying handle in order to initiate a count cycle. The word COUNTING should be flashing on the LCD during the count cycle and should disappear at the end of the predetermined count time. If a scaler ALARM condition occurs, the RESET switch can be depressed to acknowledge the alarm; however, the COUNT switch must be depressed to clear the visual ALARM and to restart the count cycle.

Depress and release the LIGHT switch. The backlight located behind the LCD should illuminate (for pre-programmed ON time). Select the desired F/S, AUD ON/OFF, and RATEMETER or SCALER parameters and proceed to use the instrument.

ED_006395_00000168-00009

Section 3

Specifications

Instrument:

Linearity: Readings are within 10% of true value with a detector connected.

Warm-up Time: Unit may be used immediately after the LCD initialization sequence is completed (approximately five seconds after power-up).

Display: A four-digit Liquid Crystal Display (LCD) with digits one half inch in height. Two additional 0.5 cm (0.2 in.) digits are used for the overflow counter (SCALER mode) and exponential powers (parameter setup). Enunciators are provided for display units, ALERT, ALARM, low battery, detector OVERLOAD, counting OVERFLOW, and scaler COUNTING.

RATEMETER: Depending upon how the instrument was calibrated, the RATEMETER can display in either R/hr, Sv/h, cpm or cps when the control switch is in the RATEMETER position.

SCALER: activated by pushbutton in handle when the three-position switch is in the SCALER position. Count time is adjustable.

Calibration Controls: Accessible from the front of the instrument (protective cover provided). These controls are preset at the factory or calibration lab and should not be adjusted by field personnel.

Discriminator / Input Sensitivity: adjustable from 2 to 100 mV; negative pulse response

Overload: ondicated by OVERLOAD on the display; adjustable

High Voltage: adjustable from 400-2400 volts; regulated within 0.2% at 1000 Vdc; maximum load of 50 μA

RESET: a pushbutton for zeroing the display, acknowledging and/or resetting the alarm

Note:

The RESET button only silences the alarm in the current mode that the instrument is in. For example, the RESET button will not affect the **scaler** alarm if the instrument is in the **ratemeter** mode.

ED_006395_00000168-00010

LIGHT: Display backlight activated by pushbutton.

Audio: built-in audio speaker (unimorph) with AUD ON/OFF switch; greater than 60 dB at 2 feet

Alert/Alarm: indicated by either an ALERT or ALARM enunciator on the display (RATEMETER mode only) and by an audible tone

Power: two each, ″D″ cell batteries housed in an externally accessible sealed compartment. Current draw is approximately 35 mA with the backlight OFF. Minimum battery voltage is 2.2 ± 0.1 Vdc.

Battery Dependence: Meter readings vary by less than 3% from fully charged batteries until the battery symbol appears, indicating the need for recharge or replacement.

Battery Life: typically 200 hours with alkaline batteries (display indicates low battery condition). Instrument will operate for approximately 24 hours after the battery symbol first appears.

Size: 16.5 x 8.9 x 21.6 cm (6.5 x 3.5 x 8.5 in.) (H x W x L)

Weight: 1.6 kg (3.5 lb), including batteries

Removable Switchboard Adjustable Parameters:

Backlight ″ON″ Time: 5, 15, 30, 60, 90, 120, 180. or 240 seconds for the backlight to stay on when activated by the pushbutton; factory set at ″5″.

Set Minimum Display: allows lower limit of the auto-ranging display to be fixed. For example, the display can be set to only show values above or equal to 1 μR/hr.

RS-232 Data Dump Mode: Enables or disables dump mode to the RS-232 port (″D″ type connector). When enabled, the data will be dumped every two seconds.

RS-232 Detector Setup Mode: allows for input of detector parameters via the RS-232 port

Baud Rate: selects either 150, 300, 600, 1200, 2400, 4800, 9600, or 19200 bps

Detector Dead Time Compensation (DTC): adjustable from 0 to 9999 microseconds

Calibration Constant: Adjustable from 0.001 to 280×10^9 counts/display unit

ED_006395_00000168-00011

Display Units: can display in R/hr, Sv/h, cpm, or cps

Display Range: auto ranging from 0.0 μR/hr – 9999 R/hr; 0.000 μSv/hr – 9999 Sv/h; 0 cpm – 999 kcpm; or 0 cps – 100 kcps

Time Base: can display in seconds or minutes

Audio Divide: 1, 10, 100, or 1000 events per click

Response Time: variable or fixed ratemeter response (All stated times correspond to a range of 10% to 90% of the final reading.) Factory default is "variable" so that the instrument will automatically adjust the response time to the best setting for the current count rate.

> **Variable Response**: Dependent on the number of counts present. Typically 4 to 25 seconds for FAST, and 4 to 60 seconds for SLOW.
>
> **Fixed Response**: The parameter is adjustable from 1 to 25 resulting in a FAST response from approximately 2 to 50 seconds. The SLOW response is approximately 10 to 250 seconds. For MDA-type measurements, the fixed response mode is recommended.

Ratemeter Alert/Alarm: set at any point corresponding to the pre-selected ratemeter range

Scaler Alarm: adjustable from 1 to 999999 counts

Scaler Count Time: adjustable from 1 to 9999 seconds

ED_006395_00000168-00012

Section 4

Identification of Controls and Functions

Display

The Model 2241 utilizes a four-digit liquid crystal display (LCD) with two-digit overflow (SCALER mode) and moving decimal point. The two smaller digits located in the lower right corner of the display indicate counter OVERFLOW when in the scaler counting mode (equivalent to a six-digit scaler) or exponential power when in the parameter setup mode. The upper right corner of the LCD displays units and multiplier(s) - R/hr, mR/hr, or µR/hr; Sv/h, mSv/h or µSv/h; C/m, kC/m, C/s or kC/s. The bottom part of the readout displays the ALARM, ALERT, OFLOW, OVERLOAD annunciators and the low battery icon. COUNTING indicates that the scaler mode has been initiated and is in the counting process.

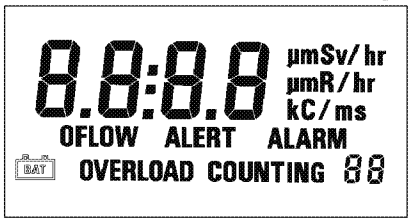

Display Status Definitions

ALARM: Ratemeter or scaler count has increased above the preset alarm threshold. An audible continuous tone will accompany the "latching" ALARM condition. Depressing RESET will acknowledge the audible ratemeter and/or scaler alarm. Depressing RESET a second time will reset the ratemeter reading and ratemeter alarm. To reset the scaler ALARM, depress the COUNT switch located in the carrying handle to re-initiate the scaler count cycle.

ALERT: Ratemeter count has increased above the preset alert threshold. To reset an ALERT condition, press RESET once if in the non-alarm condition, and twice if in an alarm condition. (The first depression in the alarm condition acknowledges the audible alarm.) The ratemeter will reset to the minimum displayable reading each time the alert is reset.

OFLOW (Overflow): RATEMETER mode - Indicates that the incoming count exceeds the capability to display stable or reliable readings corresponding to the radiation level being measured. The overflow symbol will appear when the ratemeter exceeds 100k cps or if the dead time correction is greater than 75%. OFLOW will appear in the SCALER mode when the six-digit display (four digits display and 2 overflow digits in the right corner) reaches 999999 and starts to roll over again.

ED_006395_00000168-00013

OVERLOAD: indicates that the detector is being exposed to radiation intensities greater than the detector maximum operating limit. For alpha and/or beta-type scintillation detectors, an OVERLOAD may indicate that the detector face has been punctured, allowing external light to saturate the photomultiplier tube inside the detector. The overload alarm point is set by adjusting the OVL control located underneath the calibration cover.

"low battery" icon: indicates that the batteries have decreased to the minimum operating voltage of 2.2 ±0.1 Vdc. Instrument will continue to operate for approximately 24 hours thereafter.

COUNTING: indicates that the scaler count switch has been depressed and that the scaler is accumulating counts for the pre-determined count time

Front-Panel Controls

OFF/RATEMETER/SCALER Switch: a three-position rotary switch that applies power to the instrument and selects RATEMETER or SCALER counting mode.

AUD ON/OFF Switch: The clicks-per-event audio may be silenced or enabled via this front-panel toggle switch. The audible alarm is independent of the AUD ON/OFF switch and will override the audible clicks per event. An audible alarm can only be silenced by depressing the RESET button.

F/S (Fast/Slow) Response Switch: a two-position toggle switch that selects fast or slow counting response time

Variable Response: The "F" position allows the time constant (TC) to vary from 1 to 10 seconds, while the "S" position varies from 1 to 30 seconds. The response time is automatically adjusted in proportion to the incoming count rate between the "F/S" TC variables.

Fixed Response: The "F" position corresponds to the selected fixed response time - TC. The "S" position is five times slower than the selected fast TC.

LIGHT (LCD Backlight): A pushbutton switch, when depressed, illuminates the LCD for a pre-programmed time. The backlight ON time can be selected between 5 and 240 seconds during the parameter setup.

ED_006395_00000168-00014

RESET Pushbutton Switch: In the non-alarm condition, depressing the RESET switch resets the ratemeter display to the minimum display readout. In an alarm condition (ratemeter or scaler), depressing RESET will silence the audible alarm. Depressing RESET a second time will reset the ratemeter alarm and/or alert condition. The scaler alarm can only be reset by depressing the scaler COUNT switch located in the end of the Model 2241 handle.

Note:

The RESET button only silences the alarm in the current mode that the instrument is in, for example, the RESET button will not affect the **scaler** alarm if the instrument is in the **ratemeter** mode.

Scaler COUNT Switch: Pushbutton switch located in the end of the Model 2241 carrying handle which, when depressed, initializes the start of the scaler count accumulation for the preset scaling time. The SCALER/RATEMETER switch must be in the SCALER position to initiate the counting cycle. The scaler display uses the two digits in the lower right-hand corner for the two most significant digits of the six-digit readout. Scaling time can be set from 1 to 9999 seconds in the parameter setup by way of the switch board. Depressing the COUNT switch after a scaler ALARM will reset the scaler display to 0, resetting the alarm condition.

Front-Panel Calibration Controls

Note:

Remove the front-panel calibration cover to expose the following calibration controls:

DISC (Discriminator): a multi-turn potentiometer (approximately 20 revolutions), used to vary the detector pulse-counting threshold from 2 to 100 millivolts. A Ludlum Model 500 Pulser or equivalent should be used in checking or adjusting the pulse discrimination parameter.

ED_006395_00000168-00015

Note:

When making adjustments to the HV potentiometer, make note of the following precautions: Use a Ludlum Model 500 Pulser or high-impedance voltmeter with a high-voltage probe to measure the high voltage at the detector connector. If a Ludlum Model 500 Pulser is not available, ensure that the impedance of voltmeter used is 1000 megohms or greater.

HV: a multi-turn potentiometer (approximately 20 revolutions) that varies the detector voltage from 400 to 2400 volts. The maximum high voltage output is adjusted by the HV LIMIT potentiometer located on the internal main board.

OVL (Detector Overload): A multi-turn potentiometer (approximately 20 revolutions) that adjusts the detector current level that must be exceeded to initiate an OVERLOAD alarm. This control adjusts the current level discrimination point from 0.5 and 40 microamperes, corresponding to the specific detector saturation point.

Main Board Controls

Note:

To access the internal circuit boards, unlatch the latches at each end of the Model 2241. Carefully separate the top chassis from the bottom cover (referred to as a "can"). The can has the audio speaker (unimorph) with a two-conductor cable attached to the main board. The audio plug may be disconnected during the internal control adjustments.

HV LIMIT (R027): A multi-turn potentiometer (approximately 20 revolutions) sets the maximum HV limit with the front-panel HV control adjusted to the maximum clockwise position. It is adjustable from 1250 to 2400 Vdc.

VOLUME (R002): A multi-turn potentiometer (approximately 20 revolutions) varies the audible click-per-event and alarm audio. Adjust the control to the maximum clockwise position for maximum volume. If the VOLUME control is adjusted to the maximum counterclockwise position the clicks-per-event or the audible alarm(s) will not be audible when active.

ED_006395_00000168-00016

Switch Board Controls

The switch board utilizes a 16-position rotary switch (FUNCTION) to select the 16 setup parameters. (Refer to schematics and component layout drawing near the end of the manual.) All of the setup parameters are stored in the non-volatile EEPROM, which will retain data even after the Model 2241 batteries are removed. After the parameters are entered, the switch board can be removed and the Model 2241 will continue to operate from the previously programmed information. Changing parameters and information on switchboard controls are covered in detail in Section 8 of this manual.

ED_006395_00000168-00017

Section 5

Safety Considerations

Environmental Conditions for Normal Use

Indoor or outdoor use

No maximum altitude

Temperature range of -20 to 50 °C (-4 to 122 °F)

Maximum relative humidity of less then 95% (non-condensing)

Pollution Degree 3 (as defined by IEC 664) (Occurs when conductive pollution or dry nonconductive pollution becomes conductive due to condensation. This is typical of industrial or construction sites.)

Detector Connector

Caution:

The detector operating voltage (HV) is supplied to the detector by way of the input connector. A mild electric shock may occur if contact is made with the center pin of the input connector. Switch the Model 2241 to the OFF position before connecting or disconnecting the cable or detector.

Warning Markings and Symbols

Caution!

The operator or responsible body is cautioned that the protection provided by the equipment may be impaired if the equipment is used in a manner not specified by Ludlum Measurements, Inc.

ED_006395_00000168-00018

The Model 2241 Survey Meter is marked with the following symbols:

CAUTION, RISK OF ELECTRIC SHOCK (per ISO 3864, No. B.3.6): designates a terminal (connector) that allows connection to a voltage exceeding 1 kV. Contact with the subject connector while the instrument is on or shortly after turning off may result in electric shock. This symbol appears on the front panel.

CAUTION (per ISO 3864, No. B.3.1): designates hazardous live voltage and risk of electric shock. During normal use, internal components are hazardous live. This instrument must be isolated or disconnected from the hazardous live voltage before accessing the internal components. This symbol appears on the front panel. **Note the following precautions:**

Warning!

The operator is strongly cautioned to take the following precautions to avoid contact with internal hazardous live parts that are accessible using a tool:

1. Turn the instrument power OFF and remove the batteries.
2. Allow the instrument to sit for one minute before accessing any internal components.

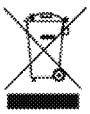

The "**crossed-out wheelie bin**" symbol notifies the consumer that the product is not to be mixed with unsorted municipal waste when discarding. Each material must be separated. The symbol is placed on the battery compartment. See Section 9, "Recycling," for further information.

The "CE" mark is used to identify this instrument as being acceptable for use within the European Union.

ED_006395_00000168-00019

Section 6

Maintenance

Instrument maintenance consists of keeping the instrument clean and periodically checking the batteries and the calibration. The Model 2241 instrument may be externally cleaned with a damp cloth (using only water as the wetting agent). Do not immerse the instrument in any liquid. Observe the following precautions when cleaning:

1. Turn the instrument OFF and remove the batteries.

2. Allow the instrument to sit for one minute before performing any external cleaning or accessing internal components for maintenance.

Recalibration

Recalibration should be accomplished after any maintenance or adjustment of any kind has been performed on the instrument. Battery replacements are not considered to be maintenance and do not normally require the instrument to be recalibrated.

Note:

Ludlum Measurements, Inc. recommends recalibration at intervals no greater than one year. Check the appropriate regulations to determine required recalibration intervals.

Ludlum Measurements offers a full-service repair and calibration department. We not only repair and calibrate our own instruments, but most other manufacturers' instruments as well.

See Section 8, "Instrument Setup," for further details on instrument calibration.

ED_006395_00000168-00020

Batteries

The batteries should be removed and the battery contacts cleaned of any corrosion at least every three months. If the instrument has been exposed to a very dusty or corrosive atmosphere, more frequent battery servicing should be used. Use a spanner wrench to unscrew the battery contact insulators, exposing the internal contacts and battery springs. Removing the handle will facilitate access to these contacts.

Note:

Never store the instrument over 30 days without removing the batteries. Although this instrument will operate at very high ambient temperatures, battery seal failure can occur at temperatures as low as 38 °C (100 °F).

ED_006395_00000168-00021

Section 7

Technical Theory of Operation

Refer to the Main Board schematic for the following:

Detector Input/Amplifier

Negative-going detector pulses are coupled from the detector through C021 to Amplifier U021. R024 and CR021 protect the input of U021 from inadvertent shorts. Self-biased amplifier U021 provides gain in proportion to R022, divided by R025. Transistor pins 4, 5, and 6 of U021, provide amplification. Pins 10-15 of U021 are coupled as a constant current source to pin 6 of U021. The output is self-bias to 2 Vbe (approximately 1.4 volts) at pin 7 of U021. This provides just enough bias current through pin 6 of U021 to conduct all of the current from the constant current source. Positive pulses from pin 7 of U021 are coupled to the discriminator (U011) through R031 and C012.

Discriminator

Positive pulses from amplifier U021 are coupled to pin 2 of U011 comparator. The discrimination level is set by the DISC control connected to pin 3 of U011. As the positive pulses at pin 2 of U011 increase above DISC reference at pin 3, pin 1 goes low, producing a low pulse. Pin 1 of U011 is normally held high (+5 volts) by R014.

The low pulse from pin 1 of U021 is coupled to univibrator U001. U001 shapes and fixes the pulse width to approximately 10 μs. The Univibrator is configured in the non-retriggerable mode. Negative pulses from pin 9 of U001 are coupled to the μP for counting.

Low-Voltage Supply

Battery voltage is coupled to DC-DC converter U231. U231 and related components provide +5V to power the μP, op-amps, and logic circuitry. R135 and R136 provide voltage division for low-battery detection. Pin 6 of U231 provides a low signal when the battery voltage decreases to +2.2 ±0.1 Vdc. U121 provides the +2.5 Vdc reference for the HV and DISC control references.

ED_006395_00000168-00022

High-Voltage Supply

High voltage is developed by blocking oscillator Q241, T141, and C244 and rectified by voltage multiplier CR041-CR043, C041-C043, and C141. High voltage increases as current through R241 increases, with maximum output voltage with Q241 saturated. High voltage is coupled back through R034 to op-amp pin 2 of U131. Resistor network R027, R132 completes the HV division circuit to ground. R027 provides HV limit from 1250-2400 when the HV control on the calibration board is at maximum. The regulated HV output is controlled by the HV1 and HV2 potentiometers located under the CAL cover on the front panel. This control provides the reference for comparator pin 3, U131. During stable operation, the voltage at pin 2 of U131 will equal the voltage at pin 3 of U131. Pin 1 of U131 will cause conduction of Q141 to increase or decrease until the HV finds a level of stability.

Detector Overload

A voltage drop is developed across R031 and sensed by comparator pins 5, 6, and 7 of U131 as detector current increases. When the voltage at pin 5 of U012 goes below pin 6, pin 7 goes low, signaling U111 (μP) to send the OVERLOAD alarm to the LCD. OVL (underneath CAL cover) control provides adjustment for the overload set point.

Microprocessor (μP)

U111 controls all of the data, control inputs, and display information. The clock frequency is crystal-controlled by Y221 and related components at 6.144 MHz. The μP incorporates internal memory (ROM), storing the program information. U1 resets the μP at power-up to initiate the start of the program routine. During the program loop, the μP looks at all the input switches for initiation or status changes and responds accordingly. U122 is a 256 x 8 bit EEPROM used to store the setup parameters. The information is transferred serially from the μP. The EEPROM is non-volatile and retains memory even after power is removed.

Audio

Click-per-event, divide-by, and alarm audio pulse frequency is generated by the μP and coupled to Q101. Q101 then inverts the pulses and drives the bottom of T101. Bias voltage is provided by the volume control (R002) to the top of T101.

ED_006395_00000168-00023

Refer to the Switch Board schematic for the following:

S1 (FUNCTION)

S1 is a 16-position binary rotary switch, which selects the programmable parameters for the Model 2241. The switch selects the parameters using the hexadecimal numbering system via buss lines SW1-SW4.

S2-S4

S2-S4 are pushbutton switches that enter/change the variables for each of the 16 parameters.

U1

U1 is a +5V powered RS-232 driver/receiver used to interface the Model 2241 to a computer.

Refer to Display Board schematic for the following:

LCD Drive

U1 and U2 are serial input 32-bit LCD drivers. The data is loaded serially into the 32-bit shift registers (internal) via the "D" IN input. The LOAD input instructs the shift register to receive data while the CLOCK input shifts the data through the 32-bit registers. After all the data is loaded, the LOAD line is pulsed by the μP, instructing the registers to transfer the data to the LCD drivers. The backplane (BP) signal from U2 provides the reference signal (approximately 125 Hz at 5 Vdc) to the LCD (DSP1) BP connection. When a segment is illuminated, the signal to that segment will be out-of-phase with the BP signal. If the segment is OFF, the signal will be in-phase with the BP signal.

Backlight Drive

Depressing the LIGHT button instructs the μP to set the BACKLIGHT line, pin 31 on μP, "low" for the predetermined backlight ON time. (Refer to main board schematic for details.) A "low" condition on pin 31 causes Q212 to conduct, sending +3V to P8-3 on display board (refer to display board schematic). Backlight oscillator Q011, T011 and related components start to oscillate, producing a 2.5 kHz sine wave signal. The signal is amplified by T011 to 150 volts peak-to-peak to drive the LCD backlight.

ED_006395_00000168-00024

Section 8

Instrument Setup

Entering or Changing Switch Board Parameters

On the switch board, select the desired parameter to enter or change by using the corresponding FUNCTION switch position. Depress the ENTER button and a character on the LCD will start to flash. The flashing character indicates that the program is in the parameter change mode.

To change the character, press the UP button until the desired variable is reached. To shift to another character, increment the LEFT pushbutton until the desired character is reached. The LEFT pushbutton enables the operator to sequence through all the characters on the LCD associated with a particular parameter.

Once the desired data is entered, depress the ENTER button. The LCD characters should stop flashing and the new parameter data should display.

To read pre-programmed setup parameters, switch the FUNCTION switch to position A and select the pre-programmed detector setup number, using the parameter change procedure above. Once the detector setup number is entered, sequence through the parameters by varying the function switch to read the variables for that specific detector number.

Note:

Once the detector setup number has been entered, the function switch can be rotated either direction to view the parameter variables.

THE FUNCTION SWITCH

FUNCTION Switch: a 16-position rotary switch labeled "0-9" and "A-F." This switch selects a parameter setup mode for the Model 2241. If the board is not installed, the normal operation mode (counting mode) is selected. If the switch board is installed, the selector switch must be set to the 0

ED_006395_00000168-00025

position for normal instrument operation. The following may be changed using the switch board, and are discussed in detail in this section:

Detector Parameters
Current Detector Setup in Use
RS-232 Communication Baud Rate
RS-232 Data Dump Mode
RS-232 Detector Parameters Set/Read Mode

FUNCTION SWITCH POSITION DESCRIPTIONS AND VARIABLES

POSITION 0: NORMAL OPERATION places the Model 2241 in the normal (counting) operating mode. Unplugging the switch board from the Model 2241 main board defaults to the normal operating mode.

POSITION 1: DEAD TIME (μs) allows changing the detector dead time correction for the current detector setup. Setting this parameter to 0 disables dead time correction. The dead time adjusts from 0 to 9999 microseconds (μs). The incoming counts are adjusted for dead time using the following formula: where,

$$n = \frac{m}{1 - m\tau}$$

n = corrected counts per second
m = incoming count per second
τ = system dead time

POSITION 2: CALIBRATION CONSTANT allows changing the calibration constant for the current detector setup. The calibration constant (CC) adjusts from 0.001 to 280 X 10^9. The calibration constant converts counts/time base to units/time base. The CC must be set to 1 to readout in cps (counts per second) or cpm (counts per minute).

$$CC = \frac{cps \ x \ time \ base}{rate}$$

CC CONVERSION TABLE

Conversion Rate	Multiply by to get CC
cps/μR/hr	3.6×10^9
cps/mR/hr	3.6×10^6
cps/R/hr	3.6×10^3
cpm/μR/hr	6.0×10^7
cpm/mR/hr	6.0×10^4
cpm/R/hr	6.0×10^1
cps/μSv/h	3.6×10^7
cps/mSv/h	3.6×10^4
cps/Sv/h	3.6×10^1
cpm/μSv/h	6.0×10^5
cpm/mSv/h	6.0×10^2
cpm/Sv/h	0.6

ED_006395_00000168-00026

Example:

The Model 44-9 GM detector produces approximately 3300 cpm/mR/hr for ^{137}Cs: $\rightarrow 6.0 \times 10^4 \times 3300 = 198 \times 10^6$ for CC.

POSITION 3: DISPLAY UNITS selects the display units for the associated detector setup number. The Model 2241 and detector may be calibrated in either exposure rate (R/hr or Sv/h) by entering the appropriate Calibration Constant (position 2) and Dead Time correction (position 1). The Model 2241 will automatically convert to the correct reading when switching between R and Sv.

The time base for count "C" is set independently in position 4. The display units may be set to:

R/hr (Roentgens per hour)
Sv/h (Sieverts per hour)
C/time base (Counts per time)

The display is auto-ranging with the appropriate multiplier symbol appearing in front of the "R," "Sv," or "C," indicating the range:

μR/hr, mR/hr, R/hr
μSv/h, mSv/h, Sv/h
C/s, kC/s, C/m, kC/m

POSITION 4: TIME BASE is set to CPS or CPM, which selects the display time base for the current detector setup. This time base only applies if the units are set to C/ (Counts/time). The time base for R/hr and Sv/h is fixed in "hr." For "true" reading (Pulser calibration) cpm or cps calibrations, set the Calibration Constant (CC, parameter 2) to read "1." For geometry calibrations, the detector efficiency can be entered for CC.

Example:

For alpha scintillation detector with 25% 2π efficiency, enter 250×10^{-3} in the CC parameter setup.

ED_006395_00000168-00027

The display time base may be set to:

seconds (**s**)
minutes (m)

POSITION 5: AUDIO DIVIDE BY selects the audible clicks-per-event division rate for the current detector setup. If the AUD ON OFF switch is in the OFF position, no audible clicks per event will be heard.

This parameter ranges from:

0 / Divide-By 1
1 / Divide-By 10
2 / Divide-By 100
3 / Divide-By 1000

POSITION 6: RESPONSE TIME allows changing the time constant (TC) for the current detector setup. If the response is set to 0, the Model 2241 automatically calculates (for variable mode) the time constant based on the incoming cps. If a variable of 1-199 is entered for TC, the response time becomes fixed.

Variable Response: Response time is varied in proportion to the incoming count rate. The two-position F/S (Fast/Slow) toggle switch selects the maximum time constant (TC) for the variable mode. The fast position varies the TC from 4-25 seconds, and the slow position varies from 4-60 seconds.

Fixed Response: The Fast (F) response position is programmable from 2-50 seconds, and the slow response is five times slower than the fast TC. For MDA-type measurements, the fixed response time mode is recommended.

POSITION 7: RATEMETER ALARM/ALERT allows changing the ratemeter alarm for the current detector setup. The units of this alarm are the same as the units for the ratemeter display. The fifth push of the left button allows the decimal point to be moved. The ratemeter alarm adjusts from 1 to 999 R/hr (or Sv/h), 1 to 999 kcpm, or 1 to 999 kcps. The units of the alarm are determined by the units for the ratemeter.

POSITION 8: SCALER ALARM/COUNT TIME sets the scaler alarm variable from 1-999999, corresponding to the accumulated scaler count. After the scaler alarm variable is entered, the scaler count time is prompted. The scaler count time is adjustable from 1-9999 seconds.

ED_006395_00000168-00028

POSITION 9: NOT USED

POSITION A: DETECTOR SETUP NUMBER allows the current detector setup to be changed to one of the six different detector setups. The detector setups are stored in EEPROM. Enter the detector setup number first before entering or changing the related detector parameters.

POSITION B: LCD Backlight ON TIME is the amount of time that the LCD backlight will stay on after pressing the front-panel switch labeled LIGHT. This value is stored in EEPROM.

Available values are:

5 seconds
30 seconds
60, 90 seconds
180, 240 seconds.

POSITION C: SET MINIMUM DISPLAY sets the ratemeter minimum displayable reading. Depressing the RESET button displays the minimum ratemeter units. The readout will auto-range up to the maximum displayable but will display 0 for ratemeter readings below the user-programmed minimum variable.

Minimum displayable values are:

00.0 μ, 000 μ, 0.00 m, 00.0 m, 000 m, 0.00, 00.0, 000 R/hr

.000 μ, 000 μ, 00.0 m, 000 m, 0.00, 00.0, 000 Sv/h

0.00, 00.0, 000, 0.00 k, 00.0 k, 000 kcpm or cps

POSITION D: RS-232 DATA DUMP MODE allows the RS-232 port to dump ratemeter data every two seconds. The Model 2241 is fully functional during RS-232 data dump with the exception of the audio function. The LCD will alternate between display of the ratemeter and the word "**dUP**" (representing "dump").

POSITION E: RS-232 DETECTOR PARAMETERS SETUP MODE allows the RS-232 port to accept/send a string of parameters corresponding to the current detector setup values.

ED_006395_00000168-00029

POSITION F: BAUD RATE configures the RS-232 port for the following baud: 150, 300, 600, 1200, 2400, 4800, 9600, and 19200. The data is 8 data bits, 1 stop bit with no parity bit. This value is stored in EEPROM. The baud rate can only be programmed through the switch board.

RS-232 PORT CONNECTOR: This 9-pin "D" type connector is designed as a DCE port. A straight wire cable (extension cable) connects the Model 2241 to a computer's 9-pin RS-232 port.

RS-232 CONNECTOR PIN OUT:

PIN	FUNCTION
1	NC (No Connection)
2	DATA OUT
3	DATA IN
4	NC
5	NC
6	NC
7	HANDSHAKING IN
8	HANDSHAKING OUT
9	NC

Note:

Ludlum Measurements, Inc. offers a PC compatible software program, which incorporates the read/write commands necessary to communicate between the PC and the Model 2241. The program also incorporates an algorithm to calculate the detector Calibration Constant and Dead Time Constant. The software is offered in a DOS version (part number 1370-025) or a WINDOWS version (part number 1370-024).
Read the Software License Agreement at the end of this section prior to installing any LMI software. If you cannot comply with the agreement, DO NOT install the software.

ED_006395_00000168-00030

Loading Default Parameters

To load the default parameters for all detector setups, hold down the UP pushbutton on the switch board, while turning the instrument on, until DEF is displayed on the LCD. The following table shows the default values.

Model 2241	**cpm**	**cpm**	**cpm**	**cpm**	**cpm**	**cpm**
	Setup 01	**Setup 02**	**Setup 03**	**Setup 04**	**Setup 05**	**Setup 06**
Dead Time	0 s	0 µs	0 µs	0 µs	0 µs	0 µs
Cal Const	100e-2	100e-2	100e-2	100e-2	100e-2	100e-2
Rate Alarm	50.0 kcpm	50.0 kcpm	50.0 kcpm	50.0 kcpm	50.0 kcpm	50.0 kcpm
Scaler Alarm	85000	85000	85000	85000	85000	85000
Count Time	12 Secs	12 Secs	12 Secs	12 Secs	12 Secs	12 Secs
Time Base	Mins	Mins	Mins	Mins	Mins	Mins
Units	cpm	cpm	cpm	cpm	cpm	cpm
Audio Divide-By	1	1	1	1	1	1
Response	0	0	0	0	0	0
Check Source	0	0	0	0	0	0
Percent CS	0	0	0	0	0	0
Rate Alert	20.0 kcpm	20.0 kcpm	20.0 kcpm	20.0 kcpm	20.0 kcpm	20.0 kcpm
Min Display	0.00 cpm	0.00 cpm	0.00 cpm	0.00 cpm	0.00 cpm	0.00 cpm
Baud Rate	9600					
LCD Time Off	5 seconds					
Detector	0					

Calibration

The Model 2241 calibration routine consists of entering detector parameters into memory by way of the switch board and adjusting the CAL controls (HV, DISC, and OVL) for the specific detector operating requirements.

The first subsection of calibration will give a general overview of detector setup, including the determination of various detector operating voltages (HV) and the adjustment of counter input sensitivity (DISC).

The next subsection deals with pulse generator counts-per-minute calibration. The counts-per-minute parameter setup is used in the initial

ED_006395_00000168-00031

instrument checkout procedure, and the variables are saved under detector setup number "1" when shipped from Ludlum Measurements, Inc.

The following subsection deals with exposure-rate calibration. The detector Calibration Constant (CC) and Dead Time Correction (DTC) are the two primary parameters used in the exposure-rate calibrations (R/hr and Sv/h). These two constants are alternately varied to achieve linearity at the detector non-linear operating regions. An example of the Ludlum Model 44-9 GM detector calibration is given at the end of this section to illustrate the algorithm used in determining the CC and DTC variables.

The last subsection of calibration deals with the Detector Overload (OVL).

GENERAL DETECTOR SETUP INFORMATION

The operating point for the instrument and probes is established by setting the probe voltage and instrument sensitivity (HV and DISC). The proper selection of this point is the key to instrument performance. Efficiency, background sensitivity, and noise are fixed by the physical makeup of the given detector and rarely vary from unit to unit. However, the selection of the operating point makes a marked difference in the apparent contribution of these three sources of count.

In setting the operating point, the final result of the adjustment is to establish the system gain so that the desirable signal pulses (including background radiation) are above the discrimination level and the unwanted pulses from noise are below the discrimination level and are, therefore, not counted.

The total system gain can be controlled by adjusting either the instrument sensitivity or the high voltage. HV controls the gain of the detector; and DISC (Discriminator) controls the instrument counting threshold (sensitivity).

In the special case of GM detectors, a minimum voltage must be applied to establish the Geiger-Mueller characteristic. Further changes in HV will have little effect on this type of detector.

GM Detectors: The output pulse height of the GM detector is not proportional to the energy of the detected radiation. Adjusting DISC will have minimal effect on observed count rate unless the DISC setting is so low that the instrument will double pulse.

ED_006395_00000168-00032

For most GM detectors, set DISC for 30-40 millivolts and adjust HV to the GM detector recommended high voltage. Most GM detectors operate at 900 volts, although some miniature detectors operate at 450-550 volts. If a recommended setting is unavailable, plot count rate versus HV to produce a plateau graph. Adjust the HV for 25-50 volts above the knee or start of the plateau. For mixed detector use, both sensitivity and high voltage may be "tailored" for other detectors as long as the GM detector is operated within the recommended voltage range. Caution must be observed in lowering the input sensitivity to ensure that the counter does not double or multi pulse.

Alpha Air-Proportional Detectors: For air proportional alpha detectors, set the DISC for 2-millivolt discrimination. Adjust HV until the detector just breaks down (shown by a rapid increase of count rate without a source present). Measure the HV output; then decrease the HV setting to operate 100 volts below breakdown.

Proportional Detectors: For proportional detectors, set the DISC control for 2-millivolt discrimination (near maximum clockwise). Expose the detector to a check source and plot count rate versus HV, similar to the one in the figure below. Refine the HV adjustment for optimum source efficiency with a minimum acceptable background count.

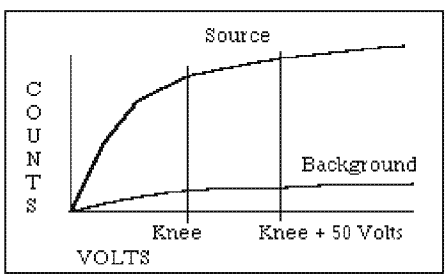

Scintillators: Set the DISC for 10 millivolts. Plot background and source counts versus HV to produce a plateau graph similar to the one in the figure. Adjust the HV to 25-50 volts above the knee or start of the plateau. This provides the most stable operating point for the detector.

COUNTS PER MINUTE (C/M) CALIBRATION

This procedure will setup the Model 2241 for the counts per minute (C/m) mode of operation. Refer to Section 8, (Page 8-2 and following) for more information on setting up parameter variables.

A Ludlum Model 500 Pulser or equivalent is required. If the pulser does not have a high-voltage display, use a high-impedance voltmeter with at least 1000 megohms input resistance to measure the detector high voltage.

ED_006395_00000168-00033

Switch SCALER/RATEMETER to the RATEMETER position.

Select FUNCTION switch positions "1-6" and adjust for the following parameters:

Switch Pos.	Parameter	Function
1	0000 s_{-6}	Dead Time
2	0100 -2	Calibration Constant
3	c/	Display Units
4	m	Timebase
5	1	Audio Divide-by
6	000 s	Response Time

Position 7 selects the desired ratemeter ALERT and ALARM trip points.

If the parameters are undetermined, arbitrarily choose "0050 kC/m" for the alarm and "0045 kC/m" for the alert to confirm operation of the alert/alarm function.

Position 8 selects the scaler ALARM parameter and the scaler count time.

If the values are unknown, set the scaler alarm to "$4500_{ALARM00}$" and the count time to "0060" (60 second count time).

Position 9 is not used, and position A is not used.

Switch to position B and enter "15" for a 15-second backlight "ON" time.

Switch to position C and enter "00.0 C/m" for the minimum displayable value.

Select position 0 to return to normal operation.

ED_006395_00000168-00034

Connect the Model 500 Pulser to detector input and adjust HV and DISC to the specific detector operating parameters.

- Adjust the pulser amplitude to 1.5 times the Model 2241 discrimination level.
- Adjust the pulser output to 800 cpm and confirm that the Model 2241 reads 800 C/m ± 10% on the ratemeter setting.
- Adjust the pulser output to 200 cpm and confirm that the Model 2241 reads 200 C/m ± 10% on the ratemeter setting.
- Adjust the pulser output to 800 cpm, take a one-minute count, and confirm that the digital scaler readout displays 800 C/m ± 2%.
- Adjust the pulser output to 200 cpm, take a one-minute count, and confirm that the digital scaler readout displays 200 C/m ± 2%.
- Confirm that the 20% and 80% readings for the upper decades are within the pulser input by decading the pulser count output.
- Confirm that the scaler readout is within 2% of the pulser input rate.
- Ensure that the ALERT and ALARMs function by inputting the preset alarm levels as to initiate the alert and alarm conditions.

R/hr CALIBRATION

The following calibration procedure assumes that detector Calibration Constant (CC) and Dead Time Constant (DTC) are already known. If these constants must be determined, reference the following subsection, "Determining CC and DTC."

Switch the toggle switch to DET2. Detector setup number 1 is usually reserved for the counts per minute parameter calibration. Rotate the FUNCTION switch counterclockwise to position 1 and enter the detector Dead Time in μs. Rotate to position 2 and enter the Calibration Constant. Enter the desired parameters for positions 3-F. Switch to position 0 for normal operation.

Expose the detector to calibrated radiation fields extending from the lower to the upper operating range of the detector. Confirm that the linearity is within 10% of each respective reading. If the readings are off

ED_006395_00000168-00035

on the lower detector operating region, vary CC. If the readings are off at the upper end of the detector operating region, adjust DTC.

DETERMINING CC AND DTC

This procedure contains the algorithm (*hi-lo method)* for determining the CC (Calibration Constant) and the DTC (Dead Time Correction). An example of the Ludlum Model 44-9 GM detector calibration is used in conjunction with the algorithm calculations to aid in solving the equations.

Note:

Ludlum Measurements, Inc. offers a PC-compatible software program, which incorporates the read/write commands necessary to communicate between a PC and the Model 2241. The program also incorporates the algorithm to calculate the detector CC and DTC. The software is offered in a DOS version (part number 1370-025) or a WINDOWS version (part number 1370-024).

Hi-Lo Method: The hi-lo method refers to the placement of the detector in a radiation field using a two-point (CC and DT) calibration to make the detector response linear, even in the non-linear operating regions of the detector. The low-radiation field (CC) should be a field that yields from 2 to 5% count loss. The high radiation field (DT) should be a field that yields from 30 to 60 percent count loss. The algorithm ignores background counts, and therefore, the low field must be at least 10 times the background count.

The following summary lists the calibration constraints.

Calibration and Dead Time Calibration Constraints

FIELD	CONSTRAINT
BACKGROUND	*10 times less than low field
LOW FIELD	Yields from 2 to 5 percent count loss
HIGH FIELD	Yields from 30 to 60 percent count loss

* This constraint only applies when using two sources (two fields) or a radiation range calibrated without background consideration.

ED_006395_00000168-00036

Preliminary CPS Setup

Refer to Section 8, subsection, "Function Switch Position Descriptions and Variables," for cps readout variables.

Starting with FUNCTION switch position 1,enter the following variables:

SWITCH POS.	PARAMETER	FUNCTION
1	$0000s_{-6}$	Dead Time
2	0100 -2	Calibration Constant
3	C/	Display Units
4	m	Timebase
5	N/A	Audio Divide-By
6	N/A	Response Time
7	N/A	Ratemeter Alm./Alert
8	0060 s	ScalerAlm./Count Time
9	Not Used	
A	Not Used	
B	N/A	LCD Backlight
C	000 C/s	Set Minimum Display
D-F	N/A	RS-232 Parameters

Equation 1

$$CPS^{LO_{2\%}} = \frac{1}{49 \ x \ DT}$$

Equation 2

$$CPS^{LO_{5\%}} = \frac{1}{19 \ x \ DT}$$

Equation 3

$$CPS^{HI_{30\%}} = \frac{1}{2.3333 \ x \ DT}$$

Equation 4

$$CPS^{HI_{60\%}} = \frac{1.5}{DT}$$

The equations to the left (Equations 1-4) determine the *hi* and *lo* radiation fields used to acquire counts for the CC and DTC algorithm. These calculations require an unknown variable, DT (Dead Time). Typical dead times for some of the standard LMI detectors are referenced in the table at the end of this section. The *lo* count field should be a field that yields between 2 and 5% count loss. The *hi* count field (CPS^{HI}) should be a field that yields between 30 and 60% count loss.

ED_006395_00000168-00037

Reference the table at the end of this section to determine the cps/exposure rate (cps/ER). The conversion can be determined by placing the detector in a radiation field that produces from 50 to 200 cps. Calculate the count/exposure rate using the equation to the left.

$$\frac{cps}{radiation\ \ field\ \ in\ \ exposure\ \ rate\ \ units} = cps\ /\ ER$$

For example, exposing a LMI Model 44-9 to a 2 mR/hr ^{137}Cs field yields approximately 110 cps so that:

$$\frac{110\ cps}{2\ mR/hr} = 55\ cps/mR/hr$$

The typical dead time for a Model 44-9 is approximately 85 µs. Therefore, using 85 µs for "DT" in equations 1-4, the *lo* field should be between 240 and 619 cps, and the *hi* field is between 5040 and 17,650 cps. Dividing the cps values by the 55 cps/mR/hr conversion equates to between 4 and 11 mR/hr for the *lo* field and 91 and 320 mR/hr for the *hi* field.

Select a calibrated field between the *lo* and *hi* data points determined above:

lo (CAL_{lo}) = 8 mR/hr

hi (CAL_{hi}) = 200 mR/hr

The following procedure outlines the hi-lo method

Abbreviations used:

units = Sv, R, counts.

CAL_{lo} = *lo* field calibration point.
CAL_{hi} = *hi* field calibration point.

$CORR_{lo}$ = recorded field at low calibration point.
$CORR_{hi}$ = recorded field at high calibration point.

DT = dead time constant entered into Model 2241.
CC = calibration constant entered into Model 2241.

f_d and a_d are intermediate steps in calculating DT.
f_{cal} is an intermediate step in calculating CC.

ED_006395_00000168-00038

CC and DTC Algorithm

Equations (5) and (6) convert units per time (R/hr Display Units) to units per second:

$$\frac{units}{time} \Rightarrow \frac{units}{second}$$

Insert the cps *lo* data point (8 mR/hr for the Model 44-9 example) determined from equations (1) and (2):

Equation 5

$$CAL_{lo} = (0.008\frac{R}{h})\,x\,(\frac{1\,h}{60\,m})\,x\,(\frac{1\,m}{60\,s}) = \quad 2.22\,x\,10^{-6}\ s$$

Insert the cps hi data point (200 mR/hr for the Model 44-9 example) determined from equations (3) and (4):

Equation 6

$$CAL_{hi} = (0.200\frac{R}{h})x\,(\frac{1\,h}{60\,m})x\,(\frac{1\,m}{60\,s}) = \quad 55.6\,x\,10^{-6}\ s$$

Place the detector in the low field and enter the counts per second:

Equation 7

$$CORR_{lo} = \frac{SAMPL_{lo}}{count\ time} = \quad \frac{counts}{s}$$

Note:

The low-field count sample should be ≥ 3000 counts. Use the Scaler and adjust the count time to accumulate count ≥ 3000.

ED_006395_00000168-00039

As an example, assume a 60-second count sample in a low field of 8 mR/hr:

Example

$$CORR_{lo} = \frac{26,427}{60} = 440 \ C/s$$

Place detector in the high field and enter the counts per second:

Equation 8

$$CORR_{hi} = \frac{SAMPL_{hi}}{count \ time} = \frac{counts}{s}$$

Counts/second sample in high field of 200 mR/hr:

Example

$$CORR_{hi} = \frac{5830}{1} = 5830 \ C/s$$

Insert the values calculated in equations (5), (6), (7), and (8) and solve for f_d:

Equation 9

$$f_d = CAL_{hi} - \frac{CORR_{hi} \ x \ CAL_{lo}}{CORR_{lo}} = \frac{units}{s}$$

Example

$$f_d = 55.6 \ x \ 10^{-6} - \frac{5830 \ x \ 2.22 \ x \ 10^{-6}}{440} = 26.2 \ x \ 10^{-6} \ s$$

Solve for a_d:

Equation 10

$$a_d = (CAL_{hi} \ x \ CORR_{hi}) - (CAL_{lo} \ x \ CORR_{hi}) = \frac{units \times count}{s^2}$$

Example

$$a_d = (55.6 \ x \ 10^{-6} \ x \ 5830) - (2.22 \ x \ 10^{-6} \ x \ 5830) = 31.1 \ x \ 10^{-6}$$

ED_006395_00000168-00040

Enter the results of equations (9) and (10) into equation (11) to solve for DT:

Equation 11

$$DT = \frac{f_d}{a_d} = \frac{s}{count}$$

Example

$$DT = \frac{26.2x10^{-6}}{31.1x10^{-2}} = 8.4x10^{-6}\ s$$

Solve for f_{cal}:

Equation 12

$$f_{cal} = CAL_{lo} - (CAL_{lo}\ x\ CORR_{lo}\ x\ DT) = \frac{units}{s}$$

Example

$$f_{cal} = 2.22\ x\ 10^{-6} - (2.22\ x\ 10^{-6}\ x\ 440\ x\ 84\ x\ 10^{-6}) = 2.14\ x\ 10^{-6}\ s$$

Enter the result of equation (12) into:

Equation 13

$$CC = \frac{CORR_{lo}}{f_{cal}} = \frac{count}{units}$$

and solve for CC:

Example

$$CC = \frac{440}{2.14\ x\ 10^{-6}} = 206\ x\ 10^{6}$$

Enter the CC and DT values (positions 1 and 2 of the FUNCTION switch), derived from the equations above. Perform an "R/hr calibration" as described in the previous subsection in order to ensure that the instrument and detector have been correctly calibrated.

ED_006395_00000168-00041

Model 44-9 Detector Parameter Setup

FUNCTION	PARAMETER
1	0084 s_{-6}
2	0206 $_{06}$
4	N/A
5-8	as desired
B-C	as desired
D-F	if applicable

Typical Count Rate and Dead Time for LMI Detectors

MODEL & TYPE	COUNT RATE	DEAD TIME in μs (microseconds)
44-6, GM	20 cps/mR/hr	90-110 μs
44-9, GM	55 cps/mR/hr	80-90 μs
44-7, GM	35 cps/mR/hr	240-290 μs
133-2, GM	17.5 cps/mR/hr	40-55 μs
133-4, GM	2 cps/mR/hr	40-55 μs
133-6, GM	0.3 cps/mR/hr	40-55 μs
44-2, Gamma Scint.	2800 cps/mR/hr	8-12 μs*
44-10, Gamma Scint.	15,000 cps/mR/hr	18-20 μs
44-3, Low-Energy Gamma Scint.	N/A, operated in Counts/units mode	8-12 μs*
44-21, Beta/Gamma Scint.	N/A, operated in Counts/units mode	8-12 μs*
43-5, Alpha Scint.	N/A, operated in Counts/units mode	20-28 μs

Note:

The data represented in the table above is typical. Actual values may vary among detector and instrument combinations. This table represents some of the common detectors operated with the Model 2241. Consult the LMI sales department for information concerning detectors not listed in the table above.

*The dead time values for these scintillation detectors are due to the dead time of the Model 2241 electronics.

ED_006395_00000168-00042

DETECTOR OVERLOAD (OVL) CALIBRATION

Note:

The detector operating voltage (HV) must be determined and adjusted before the OVL adjustment is performed. If the HV is varied or another detector is substituted, OVL must be readjusted. If the overload feature is not used, adjust the control to the maximum counterclockwise position.

The detector overload circuit senses current flow through the detector. As the radiation intensity is increased, the detector may start to saturate (decrease pulse production), and the readout may decrease or read 0. But as the pulse output continues to decrease in the saturated field, the detector current drain continues to increase. This increase in current is detected by a comparator circuit, which triggers the OVERLOAD enunciator on the LCD by way of the microprocessor.

For GM and gamma scintillation detectors, the OVL trip point is adjusted to the point to where the readout no longer increases with increasing radiation intensity. In the event that the overload point cannot be determined due to radiation field limitations, adjust the overload point from 5 to 10 times the upper operating range of the detector.

Adjust the OVL control to the maximum counterclockwise position.

Place the detector in an increasing radiation field in which the readout no longer increases. Adjust the OVL control until the OVERLOAD alarm appears. Position the detector between the upper operating limit and the OVL set point and ensure the OVERLOAD alarm is defeated. Adjust the OVL control accordingly.

Example:

Ludlum Model 44-9 is calibrated with Model 2241 in the R/hr units display, utilizing DT. The upper linear operating point is 400 mR/hr for the Model 44-9. Place the detector at the 1000 mR/hr point and adjust the OVL control to initiate the OVERLOAD alarm. Place the detector in the 600-700 mR/hr field and ensure that the OVERLOAD is off.

ED_006395_00000168-00043

The detector overload or saturation point for alpha and/or beta scintillation detectors is when the detector face (Mylar) has been punctured, allowing light to saturate the photomultiplier tube (PMT). The pulse output will decrease or even appear non-responsive to any radiation activity, depending upon the size of the puncture and the light intensity to the PMT.

Expose the detector PMT to a small light leak by loosening the detector window. Some scintillators incorporate a screw in the detector body, which when removed, will simulate a detector face puncture. The ratemeter readout should start to decrease as the light saturates the PMT.

Adjust the OVL control until the OVERLOAD just appears on the display. Reseal the light leak connection and expose the detector to a radiation source that will produce a near full-scale reading. Confirm that the OVERLOAD alarm does not initiate. Readjust the OVL control as required.

ED_006395_00000168-00044

LUDLUM MEASUREMENTS, INC.
501 OAK ST., P.O. BOX 810
SWEETWATER, TX 79556
325/235-5494 FAX: 325/235-4672

Software License Agreement

Rev. (number) 1.0
Written by (or Revised by): Richard Grole **Date:** 20 Jan 06
Approved by: Ed Emm **Date:** 20 JAN 06

BY INSTALLING THIS SOFTWARE, YOU ARE CONSENTING TO BE BOUND BY THIS AGREEMENT. IF YOU DO NOT AGREE TO ALL OF THE TERMS OF THIS AGREEMENT, DO NOT INSTALL THE PRODUCT.

Single User License Grant: Ludlum Measurements, Inc. ("Ludlum") and its suppliers grant to Customer ("Customer") a nonexclusive and nontransferable license to use the Ludlum software ("Software") in object code form solely on a single central processing unit owned or leased by Customer or otherwise embedded in equipment provided by Ludlum.

Customer may make one (1) archival copy of the Software provided Customer affixes to such copy all copyright, confidentiality, and proprietary notices that appear on the original.

EXCEPT AS EXPRESSLY AUTHORIZED ABOVE, CUSTOMER SHALL NOT: COPY, IN WHOLE OR IN PART, SOFTWARE OR DOCUMENTATION; MODIFY THE SOFTWARE; REVERSE COMPILE OR REVERSE ASSEMBLE ALL OR ANY PORTION OF THE SOFTWARE; OR RENT, LEASE, DISTRIBUTE, SELL, OR CREATE DERIVATIVE WORKS OF THE SOFTWARE.

Customer agrees that aspects of the licensed materials, including the specific design and structure of individual programs, constitute trade secrets and/or copyrighted material of Ludlum. Customer agrees not to disclose, provide, or otherwise make available such trade secrets or copyrighted material in any form to any third party without the prior written consent of Ludlum. Customer agrees to implement reasonable security measures to protect such trade secrets and copyrighted material. Title to Software and documentation shall remain solely with Ludlum.

LIMITED WARRANTY. Ludlum warrants that for a period of ninety (90) days from the date of shipment from Ludlum: (i) the media on which the Software is furnished will be

ED_006395_00000168-00045

free of defects in materials and workmanship under normal use; and (ii) the Software substantially conforms to its published specifications. Except for the foregoing, the Software is provided AS IS. This limited warranty extends only to Customer as the original licensee. Customer's exclusive remedy and the entire liability of Ludlum and its suppliers under this limited warranty will be, at Ludlum or its service center's option, repair, replacement, or refund of the Software if reported (or, upon request, returned) to the party supplying the Software to Customer. In no event does Ludlum warrant that the Software is error free or that Customer will be able to operate the Software without problems or interruptions.

This warranty does not apply if the software (a) has been altered, except by Ludlum, (b) has not been installed, operated, repaired, or maintained in accordance with instructions supplied by Ludlum, (c) has been subjected to abnormal physical or electrical stress, misuse, negligence, or accident, or (d) is used in ultrahazardous activities.

DISCLAIMER. EXCEPT AS SPECIFIED IN THIS WARRANTY, ALL EXPRESS OR IMPLIED CONDITIONS, REPRESENTATIONS, AND WARRANTIES INCLUDING, WITHOUT LIMITATION, ANY IMPLIED WARRANTY OF MERCHANTABILITY, FITNESS FOR A PARTICULAR PURPOSE, NONINFRINGEMENT OR ARISING FROM A COURSE OF DEALING, USAGE, OR TRADE PRACTICE, ARE HEREBY EXCLUDED TO THE EXTENT ALLOWED BY APPLICABLE LAW.

IN NO EVENT WILL LUDLUM OR ITS SUPPLIERS BE LIABLE FOR ANY LOST REVENUE, PROFIT, OR DATA, OR FOR SPECIAL, INDIRECT, CONSEQUENTIAL, INCIDENTAL, OR PUNITIVE DAMAGES HOWEVER CAUSED AND REGARDLESS OF THE THEORY OF LIABILITY ARISING OUT OF THE USE OF OR INABILITY TO USE THE SOFTWARE EVEN IF LUDLUM OR ITS SUPPLIERS HAVE BEEN ADVISED OF THE POSSIBILITY OF SUCH DAMAGES. In no event shall Ludlum's or its suppliers' liability to Customer, whether in contract, tort (including negligence), or otherwise, exceed the price paid by Customer. The foregoing limitations shall apply even if the above-stated warranty fails of its essential purpose. SOME STATES DO NOT ALLOW LIMITATION OR EXCLUSION OF LIABILITY FOR CONSEQUENTIAL OR INCIDENTAL DAMAGES.

The above warranty DOES NOT apply to any beta software, any software made available for testing or demonstration purposes, any temporary software modules or any software for which Ludlum does not receive a license fee. All such software products are provided AS IS without any warranty whatsoever.

This License is effective until terminated. Customer may terminate this License at any time by destroying all copies of Software including any documentation. This License will terminate immediately without notice from Ludlum if Customer fails to comply with any provision of this License. Upon termination, Customer must destroy all copies of Software.

Software, including technical data, is subject to U.S. export control laws, including the U.S. Export Administration Act and its associated regulations, and may be subject to export or import regulations in other countries. Customer agrees to comply strictly with

ED_006395_00000168-00046

all such regulations and acknowledges that it has the responsibility to obtain licenses to export, re-export, or import Software.

This License shall be governed by and construed in accordance with the laws of the State of Texas, United States of America, as if performed wholly within the state and without giving effect to the principles of conflict of law. If any portion hereof is found to be void or unenforceable, the remaining provisions of this License shall remain in full force and effect. This License constitutes the entire License between the parties with respect to the use of the Software.

Restricted Rights - Ludlum's software is provided to non-DOD agencies with RESTRICTED RIGHTS and its supporting documentation is provided with LIMITED RIGHTS. Use, duplication, or disclosure by the Government is subject to the restrictions as set forth in subparagraph "C" of the Commercial Computer Software - Restricted Rights clause at FAR 52.227-19. In the event the sale is to a DOD agency, the government's rights in software, supporting documentation, and technical data are governed by the restrictions in the Technical Data Commercial Items clause at DFARS 252.227-7015 and DFARS 227.7202. Manufacturer is Ludlum Measurements, Inc. 501 Oak Street Sweetwater, Texas 79556.

ED_006395_00000168-00047

Section 9

Recycling

Ludlum Measurements, Inc. supports the recycling of the electronic products it produces for the purpose of protecting the environment and to comply with all regional, national, and international agencies that promote economically and environmentally sustainable recycling systems. To this end, Ludlum Measurements, Inc. strives to supply the consumer of its goods with information regarding reuse and recycling of the many different types of materials used in its products. With many different agencies – public and private – involved in this pursuit, it becomes evident that a myriad of methods can be used in the process of recycling. Therefore, Ludlum Measurements, Inc. does not suggest one particular method over another, but simply desires to inform its consumers of the range of recyclable materials present in its products, so that the user will have flexibility in following all local and federal laws.

The following types of recyclable materials are present in Ludlum Measurements, Inc. electronic products, and should be recycled separately. The list is not all-inclusive, nor does it suggest that all materials are present in each piece of equipment:

Batteries	Glass	Aluminum and Stainless Steel
Circuit Boards	Plastics	Liquid Crystal Display (LCD)

Ludlum Measurements, Inc. products, which have been placed on the market after August 13, 2005, have been labeled with a symbol recognized internationally as the "crossed-out wheelie bin." This notifies the consumer that the product is not to be mixed with unsorted municipal waste when discarding. Each material must be separated. The symbol will be placed near the AC receptacle, except for portable equipment where it will be placed on the battery lid.

The symbol appears as such: 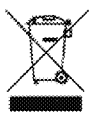

ED_006395_00000168-00048

Section 10

Parts List

	Reference	Description	Part Number
Model 2241 Survey Meter	UNIT	Completely Assembled Model 2241 Survey Meter	48-2444
Main Circuit Board, Drawing 408 × 223	BOARD	Completely Assembled Main Circuit Board	5408-223
CAPACITORS			
	C1	0.1µF, 50V	04-5663
	C3	0.1µF, 50V	04-5663
	C001-C002	47pF, 100V	04-5660
	C011	0.001µF, 100V	04-5659
	C012	0.1µF, 50V	04-5663
	C021	100pF, 3KV	04-5532
	C031	0.0047µF, 3KV	04-5547
	C032	100pF, 3KV	04-5532
	C033	0.0047µF, 3KV	04-5547
	C041-C043	0.0047µF, 3KV	04-5547
	C101	47µF, 10V	04-5666
	C121	47µF, 10V	04-5666
	C122-C123	27pF, 100V	04-5658
	C131	0.0047µF, 3KV	04-5547
	C132-C133	0.1µF, 50V	04-5663
	C134	0.01µF, 50V	04-5664
	C135	47µF, 10V	04-5666
	C136	0.01µF, 50V	04-5664
	C137	47µF, 10V	04-5666
	C138	100pF, 100V	04-5661
	C139	0.001µF, 100V	04-5659
	C141	0.0047F, 3KV	04-5547
	C241	1µF, 35V	04-5656
	C242	68µF, 10V	04-5654
	C243	0.1µF, 50V	04-5663
	C251	68µF, 10V	04-5654

ED_006395_00000168-00049

	Reference	Description	Part Number
TRANSISTORS	Q101	2N7002L	05-5840
	Q141	MMBT3904LT1	05-5841
	Q211	2N7002L	05-5840
	Q212	MMBT4403LT1	05-5842
	Q241	MJD210 RL	05-5843
INTEGRATED CIRCUITS	U1	MAX810LEUR	06-6424
	U001	CD74HC4538M	06-6297
	U011	TLC372ID	06-6290
	U021	CA3096M; 16=GND	06-6288
	U111	N87C51FC	06-6303
	U121	LM285MX-2.5	06-6291
	U122	X24C02S8T5	06-6299
	U131	LM358D	06-6312
	U231	LT1073CS8-5	05-5852
	*	SOCKET-44P	06-6613
DIODES	CR021	MMBD7000LT1	07-6355
	CR031	GI250-2	07-6266
	CR041-CR044	GI250-2	07-6266
	CR231	CXSH-4 EB33	07-6358
	CR241	MMBD914LT1	07-6353
	CR242	CXSH-4 EB33	07-6358
POTENTIOMETERS / TRIMMERS	R002	10K; 3269X1-103	09-6921
	R027	1M; 3269X1-105; HV LIMIT	09-6906
RESISTORS	R001	100K, 1/4W, 1%	12-7834
	R011-R012	10K, 1/4 W, 1%	12-7839
	R013	1K, 1/4W, 1%	12-7832
	R014	10K, 1/4W, 1%	12-7839
	R015	100K, 1/4W, 1%	12-7834
	R021	1M, 1/4W, 5%	10-7028
	R022	392K, 1/8W, 1%	12-7841
	R023	10K, 1/4W, 1%	12-7839
	R024-R025	4.75K, 1/4W, 1%	12-7858
	R026	8.25K, 1/8W, 1%	12-7838
	R031	4.7M, 1/4W, 5%	10-7030
	R032	1M, 1/4W, 5%	10-7028
	R033-R034	1G, FHV-1, 2%	12-7686
	R111-R113	22.1K, 1/4W, 1%	12-7843
	R121	100 Ohm, 1/4W, 1%	12-7840
	R122	6.81K, 1/4W, 1%	12-7857

ED_006395_00000168-00050

	Reference	Description	Part Number
	R131	1M, 1/4W, 1%	12-7844
	R132	511K, 1/8W, 1%	12-7896
	R133	750K, 1/4W, 1%	12-7882
	R134	1M, 1/4W, 1%	12-7844
	R135	82.5K, 1/8W, 1%	12-7849
	R136	10K, 1/4W, 1%	12-7839
	R141	22.1K, 1/4W, 1%	12-7843
	R211	2.21K, 1/4W, 1%	12-7835
	R231	100Ohm, 1/4W, 1%	12-7840
	R241	2.21K, 1/4W, 1%	12-7835
	R242	200Ohm, 1/8W, 1%	12-7846
CRYSTALS	Y221	6.144 MHZ, 2=GND, 3=GND	01-5262
INDUCTOR	L231	100µH, CTX100-2	21-9740
TRANSFORMERS	T101	4275-083, AUDIO	4275-083
	T141	L8050	40-0902
MISCELLANEOUS	P1	1-640456-2, MTA100×12	13-8061
	P2	1-640456-3, MTA100×13	13-8100
	P3	640456-6, MTA100×6	13-8095
	P4	640456-2, MTA100×2	13-8073
	P5	1-640456-2, MTA100×12	13-8061
	*	CLVRLF	18-8771
Calibration Board, Drawing 408 × 12	BOARD	Completely Assembled Calibration Board	5408-007
POTENTIOMETERS	R1	100K, DISC	09-6813
	R2	1M, OVERLOAD	09-6814
	R3	1M, HV	09-6814
RESISTORS	R4	10K, 1/3W, 1%	12-7748
	R5-R6	1M, 1/3W, 1%	12-7751
	R7	1K, 1/3W, 1%	12-7750
CONNECTOR	P7	CONN-640456-6, MTA100×6	13-8095
Display Board, Drawing 408 × 259	BOARD	Completely Assembled Display Board	5408-259
CAPACITORS	C1	27PF, 100V	04-5658

ED_006395_00000168-00051

	Reference	Description	Part Number
INTEGRATED CIRCUITS	U1	AY0438-I/L	06-6358
	U2	AY0438-I/L	06-6358
RESISTORS	R001-R004	10.0K, 1%, 125mW	12-7839
	R005	392 Ohm, 1%, 1/8 W	12-7054
MISCELLANEOUS	J1	CONN-640456-8, MTA100	13-8039
	DS1	EL-BACKLIGHT-LED	07-6527
	DSP1	MAIN DISPLAY; LCD-8246-365-4E1-A/W-REV1	07-6383
Switch Board, Drawing 408 × 45	BOARD	Completely Assembled Switch Board	5408-052
CAPACITORS	C1-C2	4.7µF, 10V	04-5578
	C3-C4	10µF, 20V	04-5592
	C5	4.7µF, 10V	04-5578
	C6	100µF, 10V	04-5576
INTEGRATED CIRCUITS	U1	MAX220EPE	06-6359
SWITCHES	S1	350134GSK; FUNCTION; 16 POS	08-6721
	S2	LEFT	08-6716
	S3	UP	08-6716
	S4	ENTER	08-6716
RESISTORS	R1-R2	22K	10-7070
MISCELLANEOUS	P6	CONN-1-640456-3, MTA100	13-8100
	P10	CONN-208006-2	13-8451
Chassis Wiring Diagram, Drawing 408 × 103			
AUDIO	DS1	UNIMORPH	21-9251
CONNECTORS	J1	CONN-1-640442-2, MTA100×2	13-8407

ED_006395_00000168-00052

	Reference	Description	Part Number
	J2	CONN-1-640442-3, MTA100×3	13-8138
	J3	CONN-640442-6, MTA100×6	13-8171
	J4	CONN-640442-2, MTA100×2	13-8178
	J5	CONN-1-640442-2, MTA100×2	13-8407
	J6	CONN-1-640442-3, MTA100×3	13-8138
	J7	CONN-640442-6, MTA100×6	13-8171
	J8	CONN-640442-8, MTA100×8	13-8184
	J9	Series "C" -UG706/U	13-7751
	J10	JACK-09-9011-1-419	18-9080
	P10	HANDLE PIN	7408-055
SWITCHES	S1	30-1-PB GRAYHILL	08-6517
	S3-S4	7101-SYZ-QE C&K	08-6511
	S5	30-1-PB GRAYHILL	08-6517
	S6	PA-600-210	08-6501
	S7	MPS-103F	08-6699
	*	SWTCH CAP, BLK C-22	08-6698
BATTERIES	B1-B2	"D" Duracell Battery	21-9313
MISCELLANEOUS	*	DIGITAL BEZEL ASSY.	4408-020
	*	DIGITAL BEZEL W/GLASS	4408-051
	*	BEZEL BACK	7408-025
	*	BEZEL BACK GASKET	7408-026
	*	BATTERY CONTACT SET	40-1707
	*	MAIN HARNESS	8408-048
	*	MODEL 2241 CASTING	7408-043
	*	Portable HARNESS CAN WIRES	8363-462
	*	CAN ASSY.	4363-441
	*	PORTABLE KNOB	08-6613
	*	BATTERY LID WITH CNTCT	2363-191
	*	PORTABLE LATCH KIT WITHOUT BATTERY LID	4363-349

ED_006395_00000168-00053

Reference	Description	Part Number
*	PORT CALIBRATION COVER WITH SCREWS	9363-200
*	MODEL 2241-2 RLLD HNDLE ASSY.	4408-178

ED_006395_00000168-00054

Section 11

Drawings

Optional Source Holder Assembly, Drawings 62 × 166 & 62 × 166B

Main Circuit Board, Drawings 408 × 223 (3 sheets)

Main Circuit Board Component Layout, Drawing 408 × 224

Calibration Board, Drawing 408 × 12

Calibration Board Component Layout, Drawing 408 × 13 (2 sheets)

Display Board, Drawing 408 × 259

Display Board Component Layout, Drawings 408 × 260 (2 sheets)

Switch Board, Drawing 408 × 45

Switch Board Component Layout, Drawing 408 × 46

Wiring Diagram, Drawing 408 × 103

ED_006395_00000168-00055

REV #	ALTERATIONS	DATE	BY
2	VALID EC-381	4-25-97	JGW
3	VALID EC-1017	10-20-98	TJR

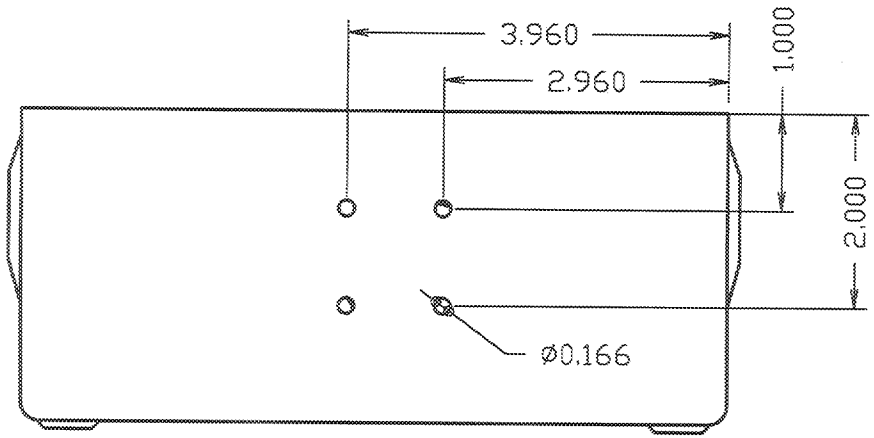

MOUNTING CHECK SOURCE

Normally, the check source holder is mounted on the side of the can opposite of the speaker. Use the drawing to the left to drill the holes in the can, or the holder can be used as a template to locate the holes. Insert the spacers into the holes with the flange inside the can and the spacer protruding to the outside of the can. Assemble the parts as shown in the lower left drawing. The printed side of the check source is the active side and should be facing out.

For check source readings, open the cover, place detector against the source, and note reading. It may be necessary to change to a higher range multiplier for an accurate reading.

To conform to 10 CFR 35.51, the licensee shall check each survey instrument for proper operation with the dedicated check source each day of use.

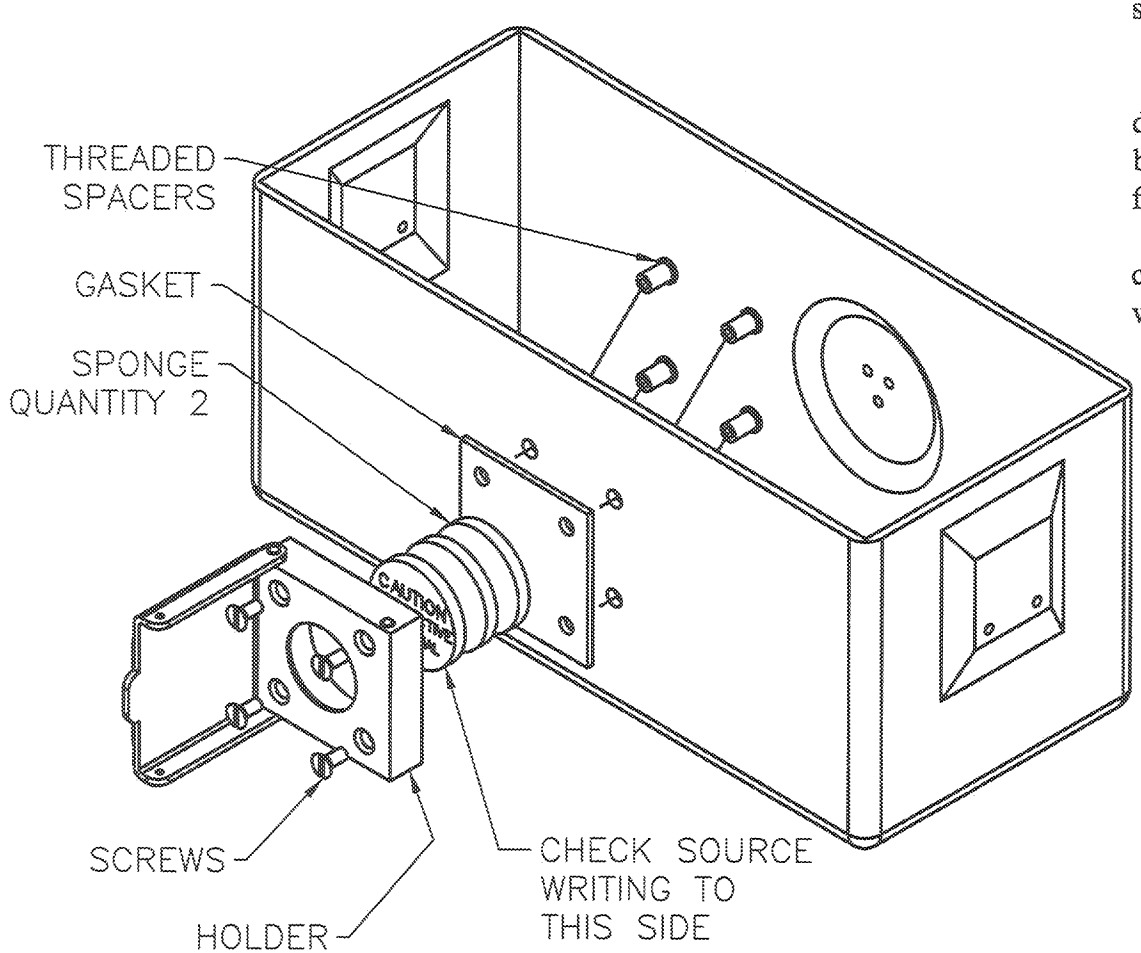

DWN	DATE	CHECKED	APPROVED
JGV	10-5-01	PSS 10-5-01	10-5-01

TITLE: SOURCE HOLDER ASSEMBLY

LUDLUM MEASUREMENTS, INC. 501 OAK STREET SWEETWATER, TEXAS 79556

SERIES	SHEET
62	166

REV #	ALTERATIONS	DATE	BY
2	VALID EC-381	4-25-97	JGW
3	VALID EC-1017	10-20-98	TJR

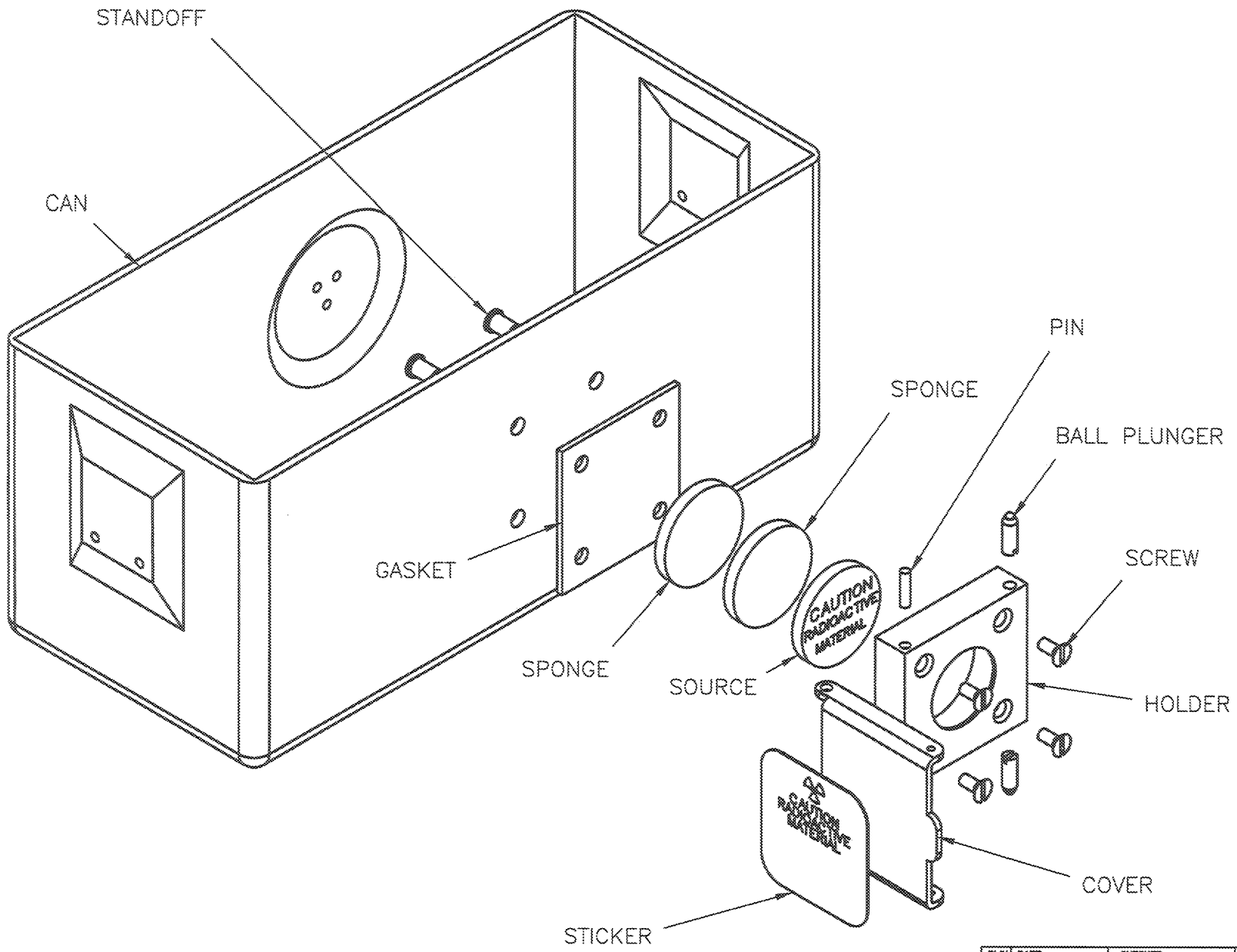

DWN	DATE	CHECKED	APPROVED
JGW	10-5-01	10-5-01	10-5-01

TITLE: SOURCE HOLDER ASSEMBLY

LUDLUM MEASUREMENTS, INC.
501 OAK STREET
SWEETWATER, TEXAS 79556

SERIES	SHEET
62	166B

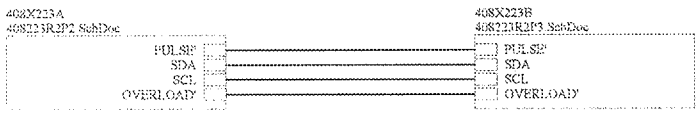

LUDLUM MEASUREMENTS, INC.

PO Box 810
501 Oak Street
Sweetwater, Texas 79556
U.S.A. 1-800-622-0828

Drawn: SA	09/20/07	Title: MAIN BOARD		
Design: RSS	09/20/07	Model: 2241		
		Board#: 5408-223		
Approve:		Sheet: 1 of 3	Series	Sheet
8:31:55 AM	9/25/2014	Rev: 2.0	408	223

408223R2P1.SchDoc

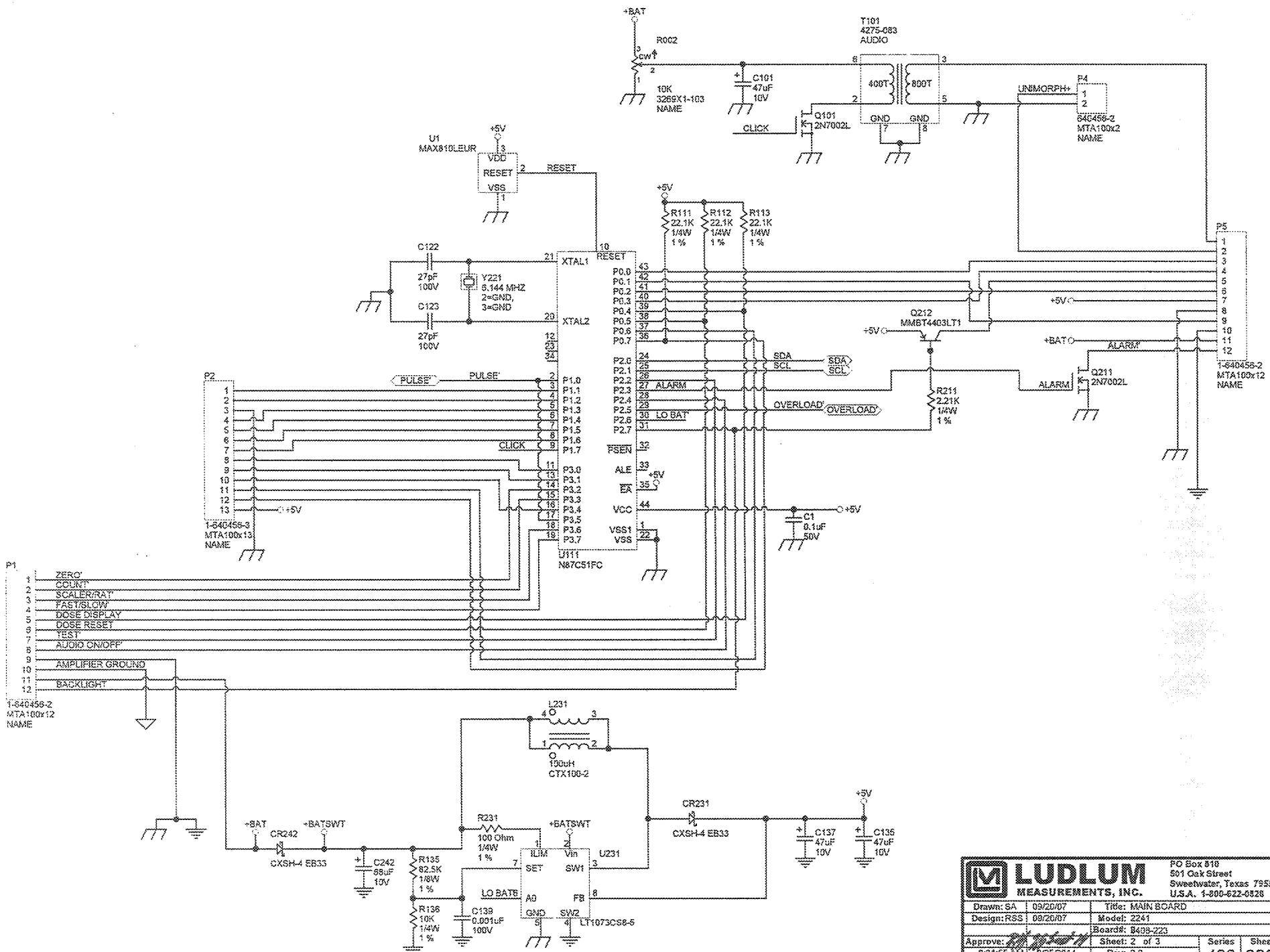
+BAT
R002
10K
3269X1-103
NAME
C101
47uF
10V
T101
4275-083
AUDIO
400T
800T
GND
GND
Q101
2N7002L
CLICK
UNMORPH+
P4
640456-2
MTA100x2
NAME
U1
MAX810LEUR
VDD
RESET
VSS
RESET
R111
22.1K
1/4W
1 %
R112
22.1K
1/4W
1 %
R113
22.1K
1/4W
1 %
C122
27pF
100V
C123
27pF
100V
Y221
5.144 MHZ
2=GND,
3=GND
XTAL1
XTAL2
RESET
P0.0
P0.1
P0.2
P0.3
P0.4
P0.5
P0.6
P0.7
P2.0
P2.1
P2.2
P2.3
P2.4
P2.5
P2.6
P2.7
SDA
SCL
ALARM
LO BAT
OVERLOAD
PSEN
ALE
EA
VCC
VSS1
VSS
P1.0
P1.1
P1.2
P1.3
P1.4
P1.5
P1.6
P1.7
P3.0
P3.1
P3.2
P3.3
P3.4
P3.5
P3.6
P3.7
U111
N87C51FC
Q212
MMBT4403LT1
R211
2.21K
1/4W
1 %
Q211
2N7002L
ALARM
P5
1-640456-2
MTA100x12
NAME
P2
PULSE
CLICK
1-640456-3
MTA100x13
NAME
C1
0.1uF
50V
P1
ZERO
COUNT
SCALER/RATE
FAST/SLOW
DOSE DISPLAY
DOSE RESET
TEST
AUDIO ON/OFF
AMPLIFIER GROUND
BACKLIGHT
1-640456-2
MTA100x12
NAME
L231
100uH
CTX100-2
CR231
CXSH-4 EB33
C137
47uF
10V
C135
47uF
10V
+BAT
CR242
CXSH-4 EB33
+BATSWT
C242
68uF
10V
R135
82.5K
1/8W
1 %
R136
10K
1/4W
1 %
R231
100 Ohm
1/4W
1 %
C139
0.001uF
100V
ILIM
SET
Vin
SW1
U231
LO BATB
A0
FB
GND
SW2
LT1073CS8-5
LUDLUM
MEASUREMENTS, INC.
PO Box 810
501 Oak Street
Sweetwater, Texas 79556
U.S.A. 1-800-622-0828
Drawn: SA 09/20/07
Design: RSS 09/20/07
Title: MAIN BOARD
Model: 2241
Board#: 8408-223
Approve:
Sheet: 2 of 3
Rev: 2.0
8:31:55 AM 9/25/2014
Series 408
Sheet 223
408223R2P2.SchDoc

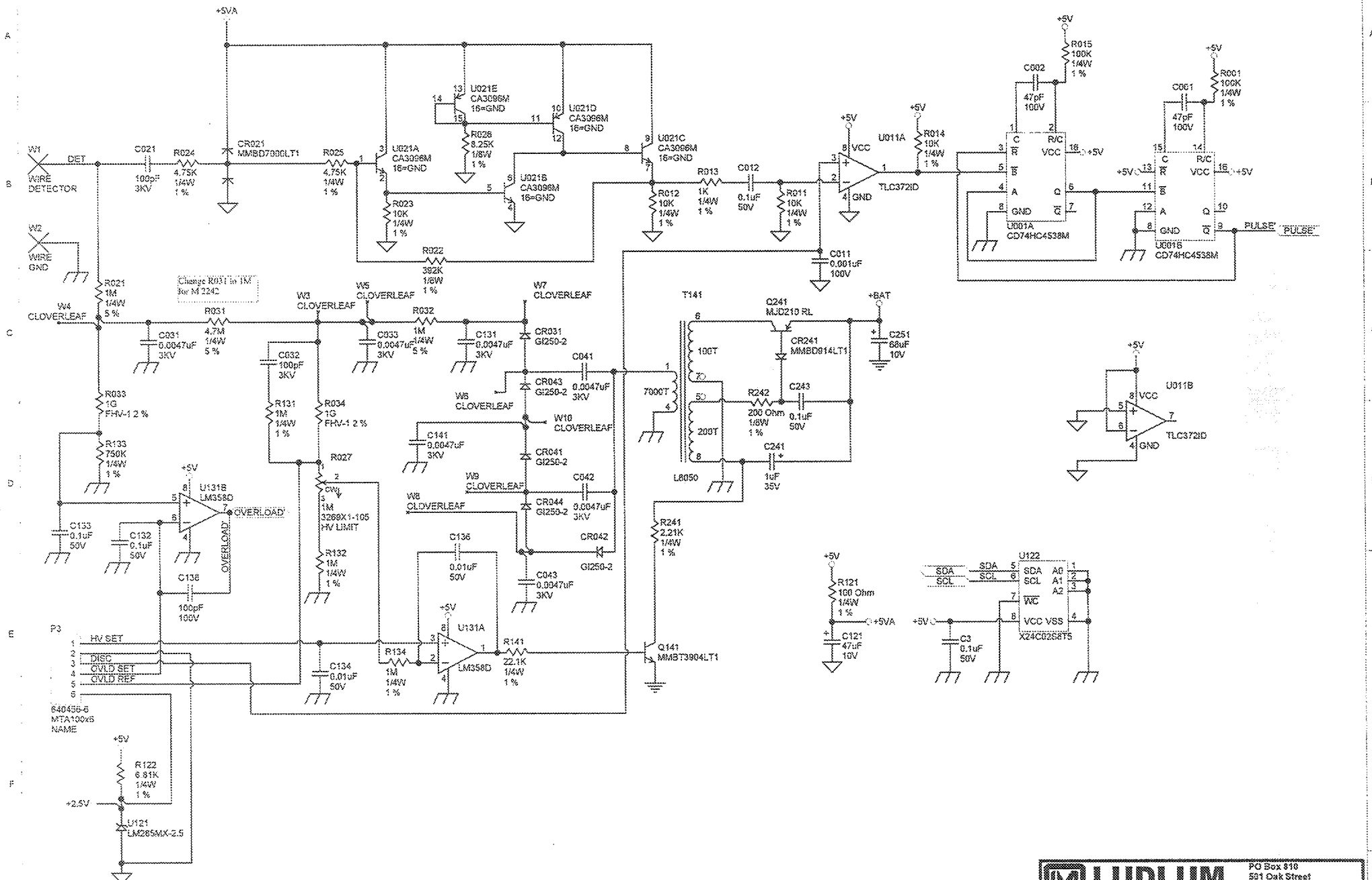
+5VA
W1
WIRE DETECTOR
DET
C021
100pF 3KV
R024
4.75K 1/4W 1 %
CR021
MMBD7000LT1
R025
4.75K 1/4W 1 %
U021A
CA3096M
16=GND
U021E
CA3096M
16=GND
U021D
CA3096M
16=GND
U021B
CA3096M
16=GND
U021C
CA3096M
16=GND
R026
8.25K 1/8W 1 %
R023
10K 1/4W 1 %
R022
392K 1/8W 1 %
R012
10K 1/4W 1 %
R013
1K 1/4W 1 %
C012
0.1uF 50V
R011
10K 1/4W 1 %
U011A
TLC372ID
R014
10K 1/4W 1 %
C011
0.001uF 100V
+5V
R015
100K 1/4W 1 %
C002
47pF 100V
U001A
CD74HC4538M
R001
100K 1/4W 1 %
C001
47pF 100V
U001B
CD74HC4538M
PULSE
W2
WIRE GND
R021
1M 1/4W 5 %
W4
CLOVERLEAF
Change R031 to 1M for M 2242
R031
4.7M 1/4W 5 %
C031
0.0047uF 3KV
W3
CLOVERLEAF
W5
CLOVERLEAF
R032
1M 1/4W 5 %
C033
0.0047uF 3KV
C131
0.0047uF 3KV
W7
CLOVERLEAF
CR031
GI250-2
C041
0.0047uF 3KV
CR043
GI250-2
W6
CLOVERLEAF
W10
CLOVERLEAF
C032
100pF 3KV
R131
1M 1/4W 1 %
R034
1G FHV-1 2 %
R033
1G FHV-1 2 %
R133
750K 1/4W 1 %
C141
0.0047uF 3KV
CR041
GI250-2
W9
CLOVERLEAF
C042
0.0047uF 3KV
W8
CLOVERLEAF
CR044
GI250-2
CR042
GI250-2
C043
0.0047uF 3KV
R027
1M 3269X1-105 HV LIMIT
R132
1M 1/4W 1 %
U131B
LM358D
OVERLOAD
C133
0.1uF 50V
C132
0.1uF 50V
C136
100pF 100V
C136
0.01uF 50V
U131A
LM358D
R134
1M 1/4W 1 %
R141
22.1K 1/4W 1 %
C134
0.01uF 50V
P3
HV SET
DISC
OVLD SET
OVLD REF
640456-6
MTA100x6
NAME
R122
6.81K 1/4W 1 %
+2.5V
U121
LM285MX-2.5
T141
100T
50
200T
7000T
L8050
Q241
MJD210 RL
CR241
MMBD914LT1
R242
200 Ohm 1/8W 1 %
C243
0.1uF 50V
C241
1uF 35V
C251
68uF 10V
+BAT
R241
2.21K 1/4W 1 %
Q141
MMBT3904LT1
U011B
TLC372ID
R121
100 Ohm 1/4W 1 %
C121
47uF 10V
U122
SDA
SCL
WC
VCC VSS
A0
A1
A2
X24C02S8TS
C3
0.1uF 50V
LUDLUM MEASUREMENTS, INC.
PO Box 810
501 Oak Street
Sweetwater, Texas 79556
U.S.A. 1-800-622-0828
Drawn: SA 09/20/07
Design: RSS 09/20/07
Approve:
8:31:55 AM 8/25/2014
Title: MAIN BOARD
Model: 2241
Board#: 5408-223
Sheet: 3 of 3
Rev: 2.0
Series 408
Sheet 223
408223R2P3.SchDoc

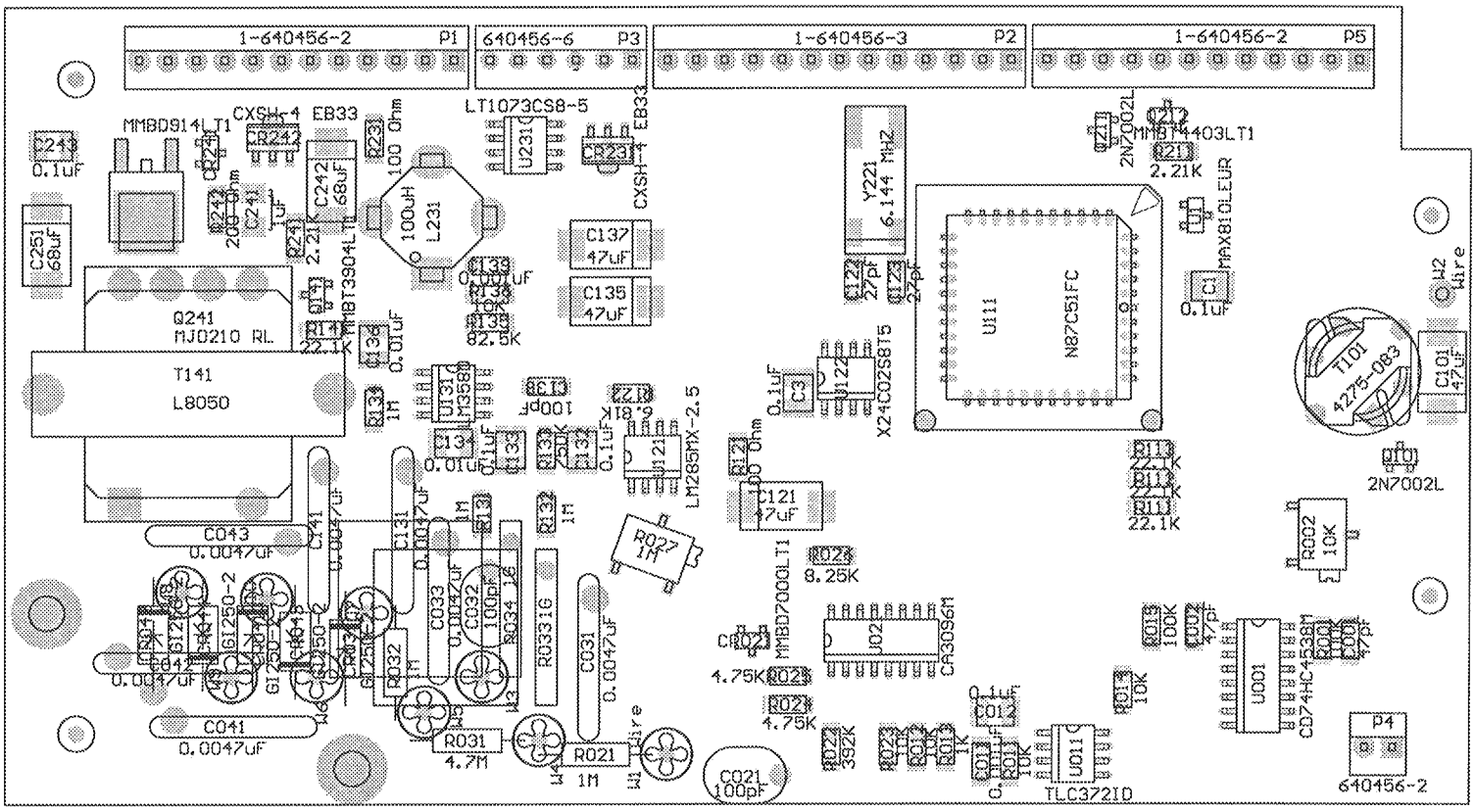

Drawn: SA	01/12/05	Title: MAIN BOARD			
Design: RSS	01/12/05				
		Model: 2241			
Approve:	20 Jun 05	Board#: 5408-223			
Layer: Mech.1 Mech.2		Rev: 1.0	Series	Sheet	
	MID: 11:26:19 20-Jun-2005	SCALE: 1.50	408	224	
BS408223					

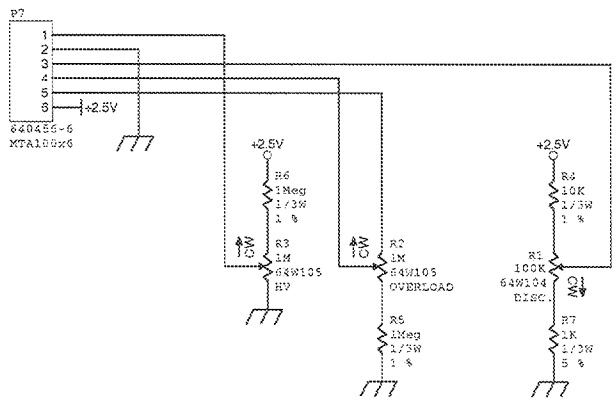

LUDLUM MEASUREMENTS, INC.

PO Box 810
501 Oak Street
Sweetwater, Texas 79556
U.S.A. 1-800-622-3828

Drawn: CKB	30-Nov-99	Title: Calibration Board	
Design: LL	22-Mar-93	Model: 2240, 2241	
Check:		Board#: 5408-007	
Approve:		Sheet: 0 of 0	Series 408 / Sheet 12
14:30:37	6-Jun-2005	Rev: 1.0	

408x12.sch

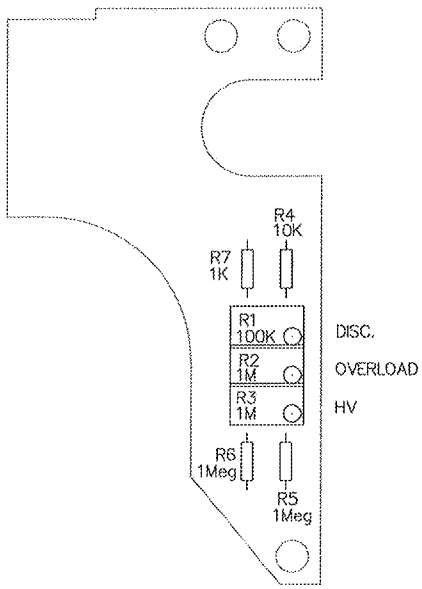

Drawn: CKB	30-Nov-99	Title: Calibration Board		
Design: LL	22-Mar-93			
Check:		Model: 2240, 2241		
Approve: JWS	18-Aug-2005	Board#: 5408-007		
Layer: Mech.1	MD: 14:50:59 6-Jun-2005	Rev: 1.0	Series	Sheet
		SCALE: 1.00	408	13
X:\Projects\LM\M2240\m2240.Ddb\\Documents\5408-007\Tech\PLD\[illegible]3007.PCB				

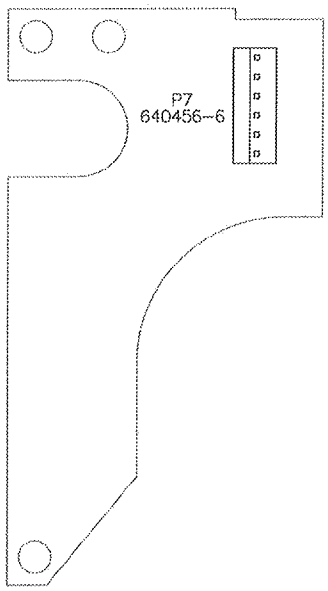

Drawn: CKB	30-Nov-99	Title: Calibration Board			
Design: LL	22-Mar-93				
Check:		Model: 2240, 2241			
Approve: JWS	18-Aug-2005	Board#: 5408-007			
Layer: Mech.1 Mech.2	Bottom Mask P1 P2 P3 P4	Rev: 1.0	Series	Sheet	
	MD: 1 2 3 4 5 6 7 8 9 10 11 12 13 14	SCALE: 1.00	408	13	
	14:50:59 6-Jun-2005				
X:\Projects\LM\M2240\m2240.Ddb\\Documents\5408-007\Tech\PLD\5408007.PCB					

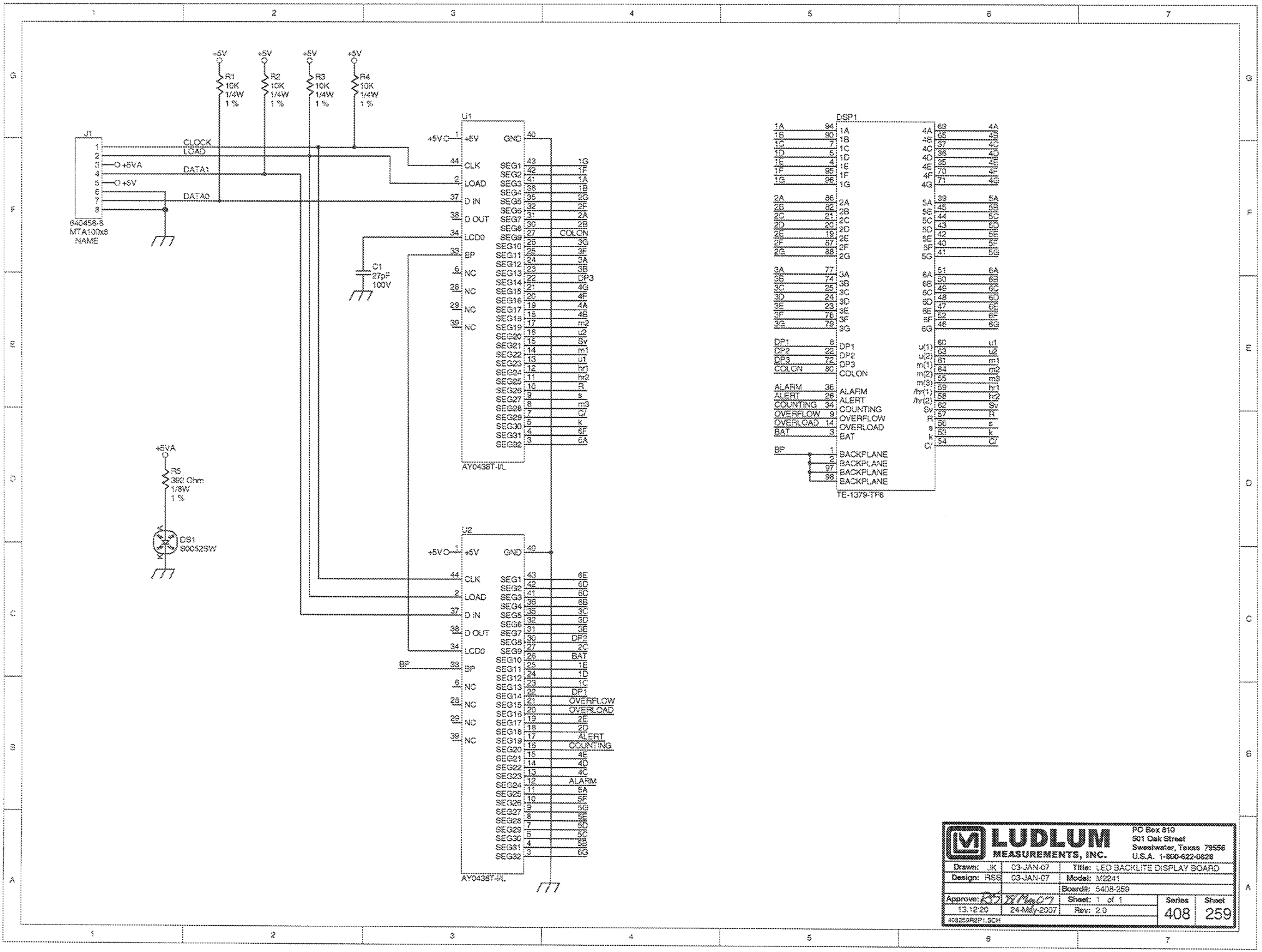
J1
640456-8
MTA100x8
NAME
CLOCK
LOAD
DATA1
DATA0
+5VA
+5V
R1 10K 1/4W 1 %
R2 10K 1/4W 1 %
R3 10K 1/4W 1 %
R4 10K 1/4W 1 %
C1 27pF 100V
R5 392 Ohm 1/8W 1 %
DS1 S0052SW
U1
AY0438T-I/L
U2
AY0438T-I/L
DSP1
TE-1379-TF6
LUDLUM MEASUREMENTS, INC.
PO Box 810
501 Oak Street
Sweetwater, Texas 79556
U.S.A. 1-800-622-0828
Drawn: JK 03-JAN-07
Design: RSS 03-JAN-07
Title: LED BACKLITE DISPLAY BOARD
Model: M2241
Board#: 5408-259
Approve: 24-May-2007
Sheet: 1 of 1
Rev: 2.0
13:12:20
408259R2P1.SCH
Series 408
Sheet 259

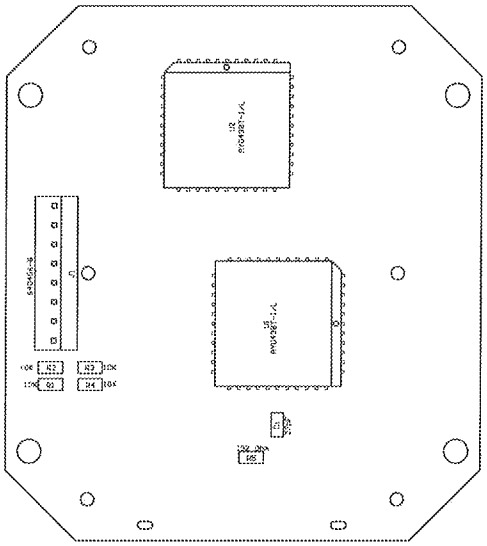

Drawn: JK	23--FEB--07	Title: LED BACKLITE DISPLAY BOARD			
Design: RSS	23--FEB--07				
		Model: M2241			
Approve: RSS	28May07	Board#: 5408--259			
Layer:		Rev: 2.0	Series	Sheet	
	MID: 13:15:16 24--May--2007	SCALE: 1.00	408	260	
408259R2X1.PCB					

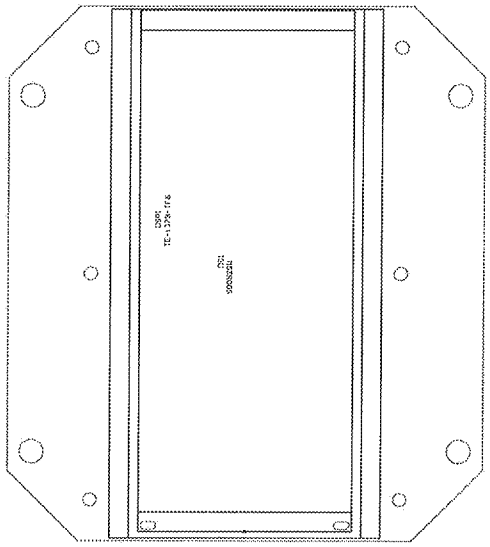

Drawn: JK	23--FEB--07	Title: LED BACKLITE DISPLAY BOARD			
Design: RSS	23--FEB--07				
		Model: M2241			
Approve: RSS	24-May-07	Board#: 5408--259			
Layer:		Rev: 2.0	Series	Sheet	
	MD: 13:15:16 24--May--2007	SCALE: 1.00	408	260	
408259R2X1.PCB					

REVISIONS						
EFF	AUTHORITY	ZONE	LTR	DESCRIPTION	DATE	APPROVED

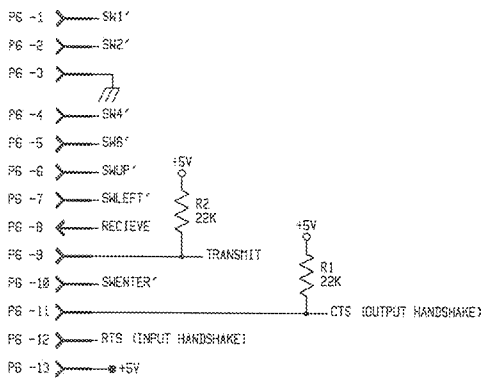

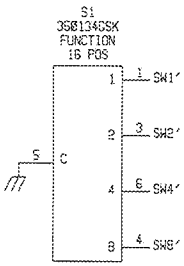

POS	FUNCTION
0	NORMAL OPERATION
1	DEAD TIME (us)
2	CALIBRATION CONSTANT
3	DISPLAY UNITS
4	TIMEBASE: CPS, CPM
5	AUDIO DIVIDE BY
6	RESPONSE TIME
7	RATEMETER ALARM / ALERT
8	SCALER ALARM / COUNT TIME
9	NOT USED
A	DETECTOR SETUP NUMBER
B	LCD BACKLIGHT ON TIME
C	SET MINIMUM DISPLAY
D	RS-232 DATA DUMP MODE
E	RS-232 DETECTOR SETUP MODE
F	RS-232 BAUD RATE

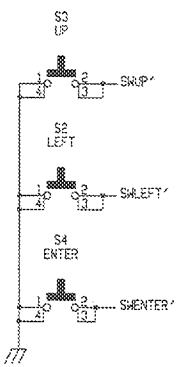

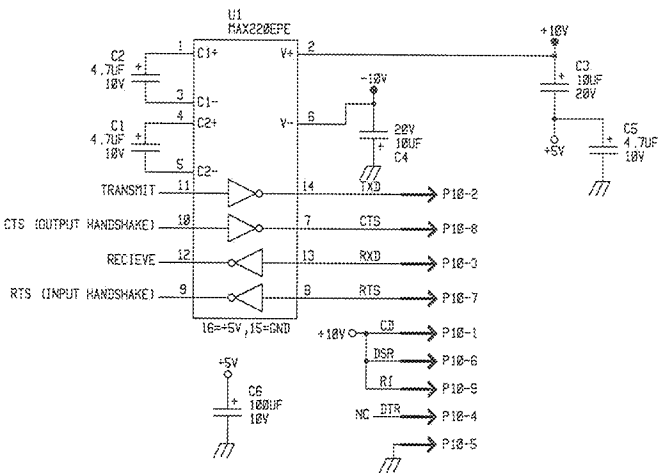

UPDATED CKB	21-DEC-00	LUDLUM MEASUREMENTS INC.	
DR CKB	06/24/96	TITLE: SWITCH BOARD	
CHK	8-31-00		
DSGN LL	3/17/93	BOARD# 5408-052	
APPD	2-10-00	SIZE C / MODEL 2241	SERIES 408 / SHEET 45
NEXT HIGHER ASSY.			
09:54:25	21-Dec-00	5040052	SHEET 1 OF 1

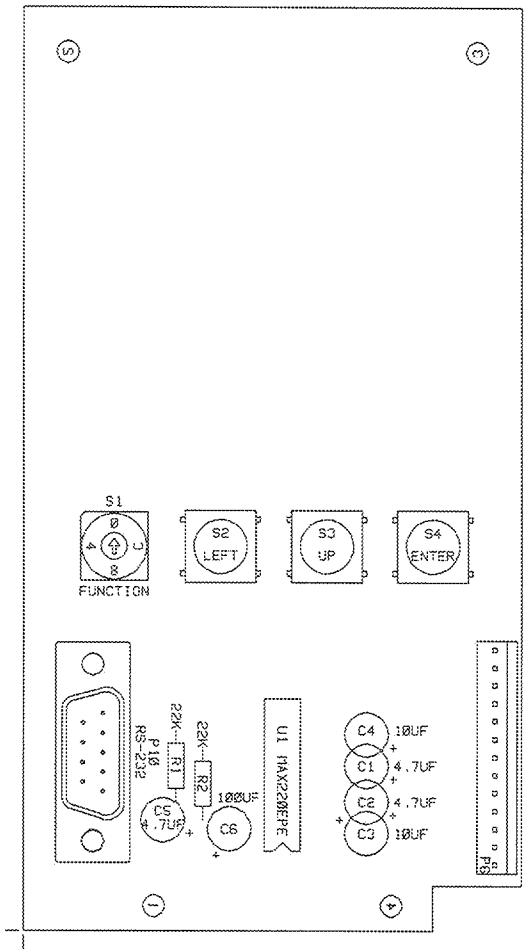

LUDLUM MEASUREMENTS INC. SWEETWATER, TX.			
DR CKB 06/24/96	TITLE: SWITCH BOARD		
CHK BS 12-21-00	BOARD: 5408-052		
DSGN LL 03/16/94	MODEL: 2241		
APP KDS 21 Dec 00	FILENAME: BS408052		
COMPONENT / SOLDER	09:52:54	21-Dec-00	
OUTLINE / OUTLINE	REVISION 1.0	SERIES 408	SHEET 46

REVISIONS					
EFF	AUTHORITY	ZONE	LTR	DESCRIPTION	DATE	APPROVED

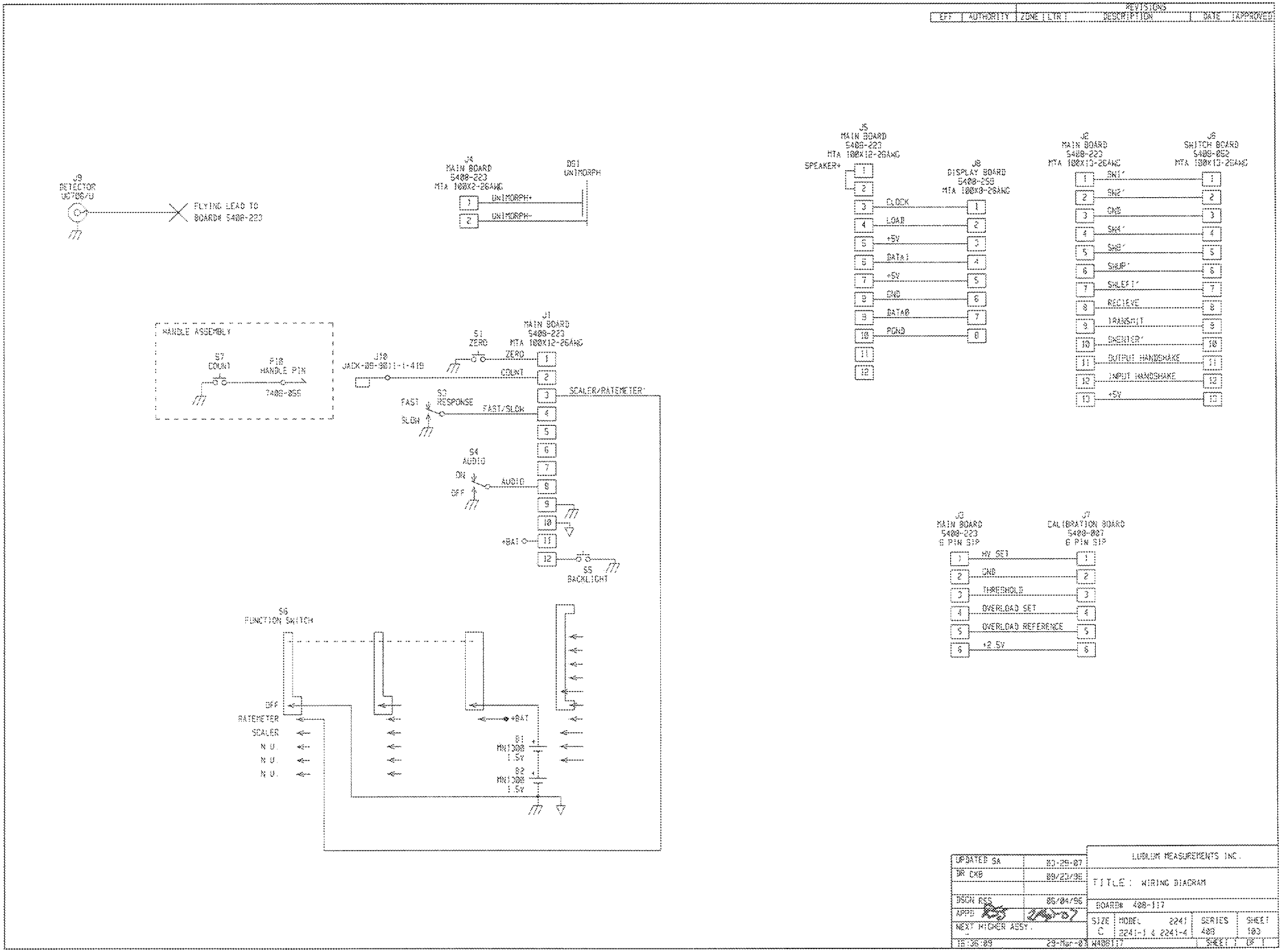

UPDATED SA	80-29-07	LUDLUM MEASUREMENTS INC.
DR CKB	89/23/96	TITLE: WIRING DIAGRAM
DSGN RSS	86/04/96	BOARD# 408-117
APPD		SIZE C · MODEL 2241 2241-1 & 2241-4 · SERIES 408 · SHEET 103
NEXT HIGHER ASSY.		
16:36:09	29-Mar-03	H408117 · SHEET 1 OF 1

Appendix

A

RS-232 Output Formats

The Ludlum Model 2241 series of instruments has an RS-232 serial communications port that can be used to log readings and read or set instrument parameters. There are two formats available. Most Model 2241 instruments have the binary format outlined below, but some newer Model 2241-2 units have an ASCII output, which is also outlined below following the binary format explanation.

The RS-232 port is configured at 9600 baud, 8 data bits, no parity, and 1 stop bit (9600,8,N,1). Ludlum Measurements can supply a Windows-based software that can be used to help calibrate the instruments, but note that it will not communicate with the newer ASCII output Model 2241-2 units.

Binary Output Format (15 Bytes)

BYTE01	RatemeterCPS+0	MSB
BYTE02	RatemeterCPS+1	
BYTE03	RatemeterCPS+2	
BYTE04	RatemeterCPE+3	LSB
BYTE05	Scaler+0	MSB
BYTE06	Sclaer+1	
BYTE07	Scaler+2	
BYTE08	Scaler+3	
BYTE09	Scaler+4	LSB
BYTE10	CountTime+0	MSB
BYTE11	CountTime+1	LSB
BYTE12	CountTimeLeft+0	MSB
BYTE13	CountTimeLeft+1	LSB
BYTE14	Carriage Return (0DH)	
BYTE15	Line Feed (0AH)	

The ratemeter value is in cps and is scaled by a factor of 256. To get the ratemeter reading in cpm, take the value and divide by 256, and then multiply by 60.

ED_006395_00000168-00071

RS-232 Commands

E – auto dump off

A – auto dump on

C – start scaler

F – set scaler count time

R – send parameters from instrument to computer

S – read parameters from computer to instrument

O – output once

All commands must be sent in upper case laters.

Output of "R" Command – Read Parameters

BYTE01	Detector+0	
BYTE02	DeadConstant+0	MSB
BYTE03	DeadConstant+1	LSB
BYTE04	CaConstant+0	MSB
BYTE05	CalConstant+1	
BYTE06	CalConstant+2	
BYTE07	CalConstant+3	
BYTE08	CalConstant+4	
BYTE09	CalConstant+5	LSB
BYTE10	RateAlarm+0	MSB
BYTE11	RateAlarm+1	
BYTE12	RateAlarm+2	
BYTE13	RateAlarm+3	
BYTE14	RateAlarm+4	LSB
BYTE15	ScalerAlarm+0	MSB
BYTE16	ScalerAlarm+1	
BYTE17	ScalerAlarm+2	
BYTE18	ScalerAlarm+3	
BYTE19	ScalerAlarm+4	LSB
BYTE20	CountTime+0	MSB
BYTE21	CountTime+1	LSB
BYTE22	Units+0	
BYTE23	TimeBase+0	
BYTE24	AudioDivideBy+0	
BYTE25	Response+0	
BYTE26	RateAlert+0	MSB
BYTE27	RateAlert+1	
BYTE28	RateAlert+2	
BYTE29	RateAlert+3	
BYTE30	RateAlert+4	LSB
BYTE31	CheckSource+0	MSB
BYTE32	CheckSource+1	
BYTE33	CheckSource+2	

ED_006395_00000168-00072

BYTE34	CheckSource+3	
BYTE35	CheckSource+4	LSB
BYTE36	PercentCS+0	
BYTE37	MinDisplay+0	
BYTE38	Carriage Return (0DH)	
BYTE39	Line Feed (0AH)	

Input of "S" Command – Send Parameters

BYTE1	DeadCosntant+0	MSB
BYTE2	DeadConstant+1	LSB
BYTE3	CalConstant+0	MSB
BYTE4	CalConstant+1	
BYTE5	CalConstant+2	
BYTE6	CalCosntant+3	
BYTE7	CalConstant+4	
BYTE8	CalConstant+5	LSB
BYTE9	RateAlarm+0	MSB
BYTE10	RateAlarm+1	
BYTE11	RateAlarm+2	
BYTE12	RateAlarm+3	
BYTE13	RateAlarm+4	LSB
BYTE14	ScalerAlarm+0	MSB
BYTE15	ScalerAlarm+1	
BYTE16	ScalerAlarm+2	
BYTE17	ScalerAlarm+3	
BYTE18	ScalerAlarm+4	LSB
BYTE19	CountTime+0	MSB
BYTE20	CountTime+1	LSB
BYTE21	Units+0	
BYTE22	TimeBase+0	
BYTE23	AudioDivdeBy+0	
BYTE24	Response+0	
BYTE25	RateAlert+0	MSB
BYTE26	RateAlert+1	
BYTE27	RateAlert+2	
BYTE28	RateAlert+3	
BYTE29	RateAlert+4	LSB
BYTE30	CheckSource+0	MSB
BYTE31	CheckSource+1	
BYTE32	CheckSource+2	
BYTE33	CheckSource+3	
BYTE34	CheckSource+4	LSB
BYTE35	PercentCS+0	
BYTE36	MinDisplay+0	

ED_006395_00000168-00073

Input of "F" Command – Set Count Time

BYTE1	CountTime+0	MSB
BYTE2	CountTime+1	LSB

Units 0 = R
1 = Sv
2 = cpm

Timebase 0 = min
1 = seconds

AudioDivide 0 = Auto
1 = Manual

ASCII Output Format

This special firmware changes the format of the auto-dump from binary to ASCII. The output interval remains the same (2 seconds).

2241	Special Firmware 40804n10	08/06/2003
2241-2	Special Firmware 40806n13	04/04/2003
2241-3	Special Firmware 40806n16	07/07/2004

The old format was (binary):

Byte 1	Ratemeter CPS + 0
Byte 2	Ratemeter CPS + 1
Byte 3	Ratemeter CPS + 2
Byte 4	Ratemeter CPS + 3
Byte 5	Scaler + 0
Byte 6	Scaler + 1
Byte 7	Scaler + 2
Byte 8	Scaler + 3
Byte 9	Scaler + 4
Byte 10	Count Time + 0
Byte 11	Count Time + 1
Byte 12	Count Time Left + 0
Byte 13	Count Time Left + 1
Byte 14	Carriage Return (0DH)
Byte 15	Line Feed (0AH)

and is now replaced with (ASCII):

byte 1	x	Ratemeter
byte 2	x	Raetemter
byte 3	x	Ratemeter
byte 4	x	Ratemeter
byte 5	x	Ratemeter
byte 6	y	Display units
byte 7	Carriage Return (0DH)	

ED_006395_00000168-00074

byte 8	Line Feed (0AH)

The ratemeter is displayed as 5 ASCII digits with a decimal, if necessary, and matches the LCD display on the 2241-2.
The display mode is a value from 0 to 9 representing the display units.

CPS	0
KCPS	1
CPM	2
KCPM	3
µR	4
mR	5
R	6
µSv	7
mSv	8
Sv	9

Note: The LMI Model 2241 calibration software is not compatible with this firmware version.

Example output:

02.991	(=2.99 kcps)
01.801	(=1.80 kcps)
01.221	(=1.22 kcps)
00.831	(=0.83 kcps)
00.581	(=0.58 kcps)
004160	(=416 cps)

ED_006395_00000168-00075