REMEDIAL INVESTIGATION REPORT
SYRACUSE CHINA LANDFILL
SYRACUSE, NEW YORK

December 1995

Prepared for

Syracuse China Company
Post Office Box 4820
Syracuse, New York 13221-4820

Prepared by

Geraghty & Miller, Inc.
24 Madison Avenue Extension
Albany, New York 12203
(518) 452-7826

REMEDIAL INVESTIGATION REPORT
SYRACUSE CHINA LANDFILL
SYRACUSE, NEW YORK

December 1, 1995

Prepared by GERAGHTY & MILLER, INC.

This Report is being requested for the purpose of determining compliance with local, state, or federal laws relating to hazardous materials that may affect or be on or about the site, and may be submitted to appropriate governmental regulatory agencies for those purposes. Geraghty & Miller, Inc. certifies that we have examined and are familiar with the information stated in this Report. To the best of our knowledge and upon our inquiry of those individuals responsible for obtaining or furnishing the information presented, the foregoing is true, accurate, and complete in accordance with accepted professional standards.

Andrew J. Barber
Senior Associate/Project Officer

CONTENTS

Page

1.0 INTRODUCTION 1-1

2.0 SITE BACKGROUND 2-1

2.1 SITE DESCRIPTION 2-1
2.2 SITE HISTORY 2-2

2.2.1 Solid Waste Characteristics 2-3

3.0 PHYSICAL SETTING 3-1

3.1 GEOGRAPHY 3-1
3.2 REGIONAL GEOLOGY 3-1
3.3 SITE HYDROGEOLOGY 3-2

4.0 METHODOLOGY 4-1

4.1 MAGNETOMETER SURVEY 4-1
4.2 SOIL BORINGS 4-1

4.2.1 Landfill Borings 4-2
4.2.2 Sludge Borings 4-3

4.3 SEDIMENT/SOIL SAMPLING 4-3
4.4 SURFACE WATER SAMPLING 4-4
4.5 MONITORING WELL DRILLING AND INSTALLATION 4-4
4.6 SURVEYING 4-6
4.7 GROUNDWATER SAMPLING 4-6
4.8 HORIZONTAL DIRECTION OF GROUNDWATER FLOW 4-7
4.9 HYDRAULIC CONDUCTIVITY TESTING 4-7
4.10 QUALITY ASSURANCE AND QUALITY CONTROL 4-8

4.10.1 Field Blanks and Trip Blanks 4-8
4.10.2 Duplicate Samples 4-8
4.10.3 Matrix Spike/Matrix Spike Duplicates 4-9

4.11 CHEMICAL DATA VALIDATION 4-9

5.0 RESULTS 5-1

5.1 MAGNETOMETER SURVEY 5-1
5.2 LANDFILL THICKNESS 5-1
5.3 SLUDGE BORINGS 5-2
5.4 HYDRAULIC CONDUCTIVITY TESTING 5-2

6.0 GROUNDWATER, SOIL, SURFACE WATER, AND SEDIMENT QUALITY DATA 6-1

CONTENTS (continued)

6.1 GROUNDWATER QUALITY DATA 6-1
6.1.1 Volatile Organic Compounds 6-1
6.1.2 Inorganic Parameters 6-2
6.2 SOIL QUALITY DATA 6-4
6.2.1 Volatile Organic Compounds 6-5
6.2.2 Inorganic Parameters 6-5
6.2.3 Semivolatile Organic Compounds 6-6
6.3 SURFACE WATER QUALITY DATA 6-6
6.3.1 Volatile Organic Compounds 6-6
6.3.2 Inorganic Parameters 6-6
6.4 SEDIMENT/SOIL QUALITY DATA 6-7
6.4.1 Volatile Organic Compounds 6-7
6.4.2 Inorganic Parameters 6-8
6.4.3 Polychlorinated Biphenyls 6-8
7.0 RISK ASSESSMENT 7-1
7.1 BACKGROUND INFORMATION 7-1
7.2 DATA REVIEW 7-2
7.2.1 Groundwater 7-3
7.2.2 Soil 7-4
7.2.3 Surface Water 7-4
7.2.4 Sediment/Soil 7-5
7.3 EXPOSURE ASSESSMENT 7-6
7.3.1 Sources and Receiving Media 7-7
7.3.2 Environmental Fate and Transport of Lead 7-8
7.3.3 Exposure Pathways and Receptors 7-9
7.4 TOXICITY REVIEW 7-10
7.5 RISK CHARACTERIZATION 7-11
7.6 RISK ASSESSMENT SUMMARY 7-13
8.0 SUMMARY AND CONCLUSIONS 8-1
9.0 REFERENCES 9-1

ED_006185_00000992-00004

TABLES

1. Groundwater Elevation Data Collected January 5, 1995, Syracuse China Site, Syracuse, New York.

2. Summary of Volatile Organic Compounds Detected in Groundwater Samples Collected January 5, 1995, Syracuse China, Syracuse, New York.

3. Summary of Inorganic Parameters Detected in Groundwater Samples Collected January 5, 1995, Syracuse China, Syracuse, New York.

4. Summary of the Dissolved Metals Concentrations in Groundwater Samples Collected on January 5, 1995, Exceeding the New York State Department of Environmental Conservation Division of Water Technical and Operational Guidance Series (TOGS 1.1.1) Ambient Water Quality Standards and Guidance Values, Syracuse China Site, Syracuse, New York.

5. Summary of Volatile Organic Compounds Detected in Soil Samples, Syracuse China, Syracuse, New York.

6. Summary of Inorganic Parameters Detected in Soil Samples, Syracuse China, Syracuse, New York.

7. Summary of Semivolatile Organic Compounds Detected in Soil Samples Collected December 6, 1994, Syracuse China, Syracuse, New York.

8. Summary of Volatile Organic Compounds Detected in Surface-Water Samples Collected December 7, 1994, Syracuse China, Syracuse, New York.

9. Summary of Volatile Organic Compounds Detected in Sediment Samples, Syracuse China, Syracuse, New York.

10. Summary of Volatile Organic Compounds Detected in Sediment Samples, Syracuse China, Syracuse, New York.

11. Summary of Inorganic Parameters Detected in Sediment Samples, Syracuse China, Syracuse, New York.

12. Summary of Polychlorinated Biphenyl Compounds Detected in Sediment Samples Collected December 1, 1994, Syracuse China, Syracuse, New York.

TABLES - continued

13. Metal Concentrations in Sediment and New York State Sediment Criteria, Syracuse China Site, Syracuse, New York.

14. Calculated Hydraulic Conductivity Values for Monitoring Wells at the Syracuse China Site, Syracuse, New York.

15. Summary of Total and Dissolved Metals Detected in Groundwater Samples Collected on August 17, 1995 at Syracuse China Landfill, Syracuse China Company, Syracuse, New York.

16. Summary of Total Metals and Cyanide Detected in Surface Water Samples Collected at Syracuse China Landfill, Syracuse China Company, Syracuse, New York.

17. Summary of Total Metals and Cyanide Detected in Sediment Samples Collected at Syracuse China Landfill, Syracuse China Company, Syracuse, New York.

18. Summary of the Dissolved Metals Concentrations in Groundwater Samples Collected on August 17, 1995, Exceeding the New York State Department of Environmental Conservation Division of Water Technical and Operational Guidance Series (TOGS 1.1.1) Ambient Water Quality Standards and Guidance Values, Syracuse China Site, Syracuse, New York.

19. Summary of the Total (Unfiltered) Metals Concentrations in Groundwater Samples Collected on January 5, 1995, Exceeding the New York State Department of Environmental Conservation Division of Water Technical and Operational Guidance Series (TOGS 1.1.1) Ambient Water Quality Standards and Guidance Values, Syracuse China Site, Syracuse, New York.

20. Summary of Total (Unfiltered) Metals Concentrations in Groundwater Samples Collected on August 17, 1995, Exceeding the New York State Department of Environmental Conservation Division of Water Technical and Operational Guidance Series (TOGS 1.1.1) Ambient Water Quality Standards and Guidance Values, Syracuse China Site, Syracuse, New York.

FIGURES

1. Site Location, Syracuse China Site Landfill, Syracuse China Manufacturing Company, Syracuse, New York.

FIGURES - continued

2. Location of Site Landfill, Syracuse China Landfill, Syracuse China Manufacturing Company, Syracuse, New York.

3. Plan View of Cross Section A-A' and B-B', Syracuse China Site, Syracuse China Manufacturing Company, Syracuse, New York.

4. Geologic Cross Sections A-A' and B-B', Syracuse China Site, Syracuse China Manufacturing Company, Syracuse, New York.

5. Water-Level Elevations, January 5, 1995, Syracuse China Site, Syracuse China Manufacturing Company, Syracuse, New York.

6. Lead Concentrations in Surface Water, Sediment/Soil, and Soil Boring Samples, Syracuse China Site, Syracuse Manufacturing Company, Syracuse, New York.

7. August 1995 Surface Water and Soil/Sediment Sampling Locations, Syracuse China Landfill, Syracuse China Company, Syracuse, New York.

APPENDICES

A. Soil Boring and Well Construction Logs

B. Surface-Water Sampling Logs

C. Permeability Testing Results

D. Groundwater Sampling Logs

E. Hydraulic Conductivity Testing Data

F. Data Validation

G. Laboratory Reports

H. Lead Model

REMEDIAL INVESTIGATION REPORT
SYRACUSE CHINA LANDFILL
SYRACUSE, NEW YORK

1.0 INTRODUCTION

Geraghty & Miller, Inc. was retained to conduct a focused Remedial Investigation/Feasibility Study (RI/FS) at the Syracuse China Landfill (Site) which is located on the property of Syracuse China Company (Syracuse China), in Syracuse, New York. The RI was conducted in accordance with the approved work plan (Geraghty & Miller, Inc. 1994a) generated for the site as required in the Administrative Order on Consent dated November 1, 1994.

Previous data from a preliminary hydrogeologic site assessment (O'Brien & Gere Engineers, Inc. 1990), quarterly groundwater and surface water sampling (April 1991 to December 1992), and SPDES Permit monitoring (February 1986 to September 1989) were evaluated in the RI work plan (Geraghty & Miller, Inc. 1994a). Based on that data, a focused scope of work was developed for the site to characterize the nature and extent of contamination in support of an analysis of remedial alternatives to be subsequently addressed in a feasibility study (FS).

This document provides the results of the RI, completed during November 1994 through January 1995, and August 1995, and is presented to characterize the nature and extent of impacts at the site to determine potential contaminant migration pathways, and to provide a basis for the completion of a focused FS.

2.0 SITE BACKGROUND

2.1 SITE DESCRIPTION

The Syracuse China landfill is located to the north of the Syracuse China manufacturing facility in Syracuse, Onondaga County, New York (Figure 1). The landfill occupies an area of approximately 13 acres and is bound by Conrail railroad tracks on the south side, wetlands on the north side, and undeveloped Syracuse China property on the east and west sides (Figure 2).

Current site topography is dominated by two mounds; the western half of the landfill and the eastern half of the landfill (Figure 3). The western portion of the landfill is the oldest part of the landfill and reportedly contains broken china, gypsum molds, facility wastewater treatment sludge, cement, and construction debris. The eastern portion of the landfill reportedly contains broken china, gypsum molds, wastewater treatment sludge, and refractory material.

Two primary settling ponds and two secondary settling ponds are located between the landfill mounds (Figure 3). Effluent from the facility wastewater treatment was discharged to primary Settling Ponds 1 and 2. Prior to discharge to Settling Pond 1, a flocculent was added which aided in settling out suspended solids in the wastewater stream. Periodically, the settling ponds were dredged and the bottom materials were placed in the sludge pond. The material in the sludge pond was allowed to dry prior to being placed in the landfill. There have been no dredging activities since May 1989.

In July 1990, modifications were made to the wastewater treatment pond system. Non-sanitary effluent from the facility combines in a single discharge line prior to a facility sampling point (Site 011). At Site 011 a coagulant/flocculent is added continuously to the wastewater effluent stream to accelerate the settling process. The discharge line passes under

the railroad tracks to an open ditch which flows to Settling Pond 3, then through a culvert to Settling Pond 4, and to Settling Pond 2, discharging to the permitted outfall at sampling point (Site 001) located at the north end of Settling Pond 2 (Figure 3).

Syracuse China maintains a State Pollutant Discharge Elimination System (SPDES) Permit (NY 010-0137) to discharge effluent from its manufacturing facility to Ley Creek through the outfall (Site 001) at the north end of Settling Pond 2. At the same time wastewater modifications were made in July 1990, Syracuse China incorporated process changes to capture suspended solids prior to discharge to the settling pond. Leaded materials (e.g., glaze and pigments) are recycled in a closed-loop system or are put through a pre-treatment system and then discharged to the local publicly operated water treatment facility.

In 1992, Syracuse China began a program to reevaluate and improve its wastewater collection and treatment process. Syracuse China retained the services of C & H Engineers, P.C. to perform an evaluation of their current wastewater collection and treatment systems, and to assist in elimination of specific waste streams from its SPDES discharge.

Information regarding the specifics of the facility wastewater collection and treatment systems were submitted to the New York State Department of Environmental Conservation (NYSDEC) Region 7 Division of Water (Syracuse China, 1992, C & H Engineers 1992).

2.2 SITE HISTORY

Syracuse China has used the area north of the manufacturing facility as an industrial landfill since approximately 1940. The general public had access to the landfill until it was fenced, sometime in the late 1960s or early 1970s. Although undocumented, the public reportedly left some refuse materials in the landfill. In addition, contractors for the City of Syracuse, and the Towns of Salina and Dewitt disposed of road fill and materials cleared from storm sewer catch basins in the landfill (O'Brien & Gere 1990).

During late 1988, Syracuse China contacted the NYSDEC Region 7 regarding upgrading or closure of the landfill in response to revised regulations governing solid waste management (i.e.: 6 NYCRR Part 360). Subsequently, Syracuse China conducted a study of the groundwater quality around the landfill and submitted to NYSDEC a "Preliminary Hydrogeologic Site Assessment Report" (O'Brien & Gere 1990). This report detailed the results of an investigation conducted to characterize the quality of groundwater and surface water in the vicinity of the landfill and the wastewater treatment sludge disposed in the landfill. The analytical data collected as part of the assessment indicated that four wastewater treatment sludge samples, collected in the vicinity of the settling ponds, exceeded the EP Toxicity threshold for lead (5.0 milligrams per liter [mg/L]). Based on this data, the NYSDEC listed the Site on the Registry of Inactive Hazardous Waste Disposal Sites with a classification of 2.

2.2.1 Solid Waste Characteristics

The Syracuse China "Solid Waste Management Plan" (O'Brien & Gere 1991) has identified that the following materials were disposed at the on-site landfill:

- Biscuit China Scrap

  Biscuit China Scrap (unfinished product) is produced from the manufacturing process. It is composed of fired ceramic pieces which have not yet been decorated and/or glazed. It should be noted that since 1990, approximately 90 percent of all biscuit china scrap has been recycled off-site to be utilized as feedstock for a refractories manufacturing process.

- Glost China Scrap

  Glost China Scrap (finished product) is the final product of the manufacturing process. It is composed of glazed and/or decorated china which has been fired two or more times.

- Gypsum Mold Scrap

Gypsum molds are comprised of plaster of paris and are used to form all the ceramic pieces. Gypsum molds are manufactured at the plant. The gypsum molds have a limited service life due to surface wear.

- Refractory Scrap

The majority of the refractory scrap is composed of shelves and posts. Shelves and posts are assembled so that the china can be placed on them before it is fired through a tunnel kiln. The material used to make the shelves and posts is cordierite (magnesium aluminum silicate). Other refractory wastes include brick shapes and other castable materials which are used as girders or blocks to form the cars upon which the shelves and posts are placed for firing through the tunnel kiln. These items are made of materials similar to magnesium aluminum silicate. Refractory items have a limited service life due to thermal stress which causes them to eventually crack and/or warp.

- Wastewater Filter Cake

In August, 1990, the facility undertook the process change to redirect process water to the clay preparation department for filtration. Suspended solids from various wastewater streams at the plant are removed by a standard plate and frame filter press system and a wastewater filter cake is formed. From November 1991 to October 1992, all wastewater filter cake was sent off-site for disposal at the City of Auburn Landfill. Since October 1992, the wastewater filter cake has been sent off-site to Seneca Meadows in Waterloo, New York.

* Construction and Demolition Materials

  Construction and demolition materials include concrete demolition debris, paving materials from parking lot repair, and excavated materials from road repair and underground pipe maintenance at the facility.

* Material Handling

  Material Handling materials include bag and bulk non-hazardous materials such as clay, silica, feldspar, etc. (raw materials) which were unusable in the manufacturing process.

In December 1990, samples of the biscuit china scrap, glost china scrap, gypsum mold scrap, refractory scrap, and wastewater filter cake were analyzed for volatile organic compounds (VOCs), semivolatile organic compounds (SVOCs), metals, pesticides, and herbicides using the Toxicity Characteristic Leaching Procedure (TCLP) for hazardous waste characterization. The analytical results indicated that only the glost china scrap had detectable concentrations of any TCLP parameter. The glost china scrap had a lead concentration of 1.0 mg/L, which is below the maximum allowable concentration of 5.0 mg/L established for lead in 40 CFR Part 261.

Syracuse China ceased disposal of solid wastes in the landfill in September, 1994.

3.0 PHYSICAL SETTING

This section describes the physical setting (local and regional) of the Syracuse China site. Discussed below are geography, geology, and hydrogeology.

3.1 GEOGRAPHY

The site is located in the glaciated portion of the Ontario Lowlands Physiographic Province of New York State. This area is characterized by flat to gently rolling lake plain topography and is bound by Lake Ontario to the northwest, Oneida Lake to the northeast, Onondaga Lake to the southwest, and the east-west trending escarpment of the Allegheny Plateau (Todd 1983).

The site is situated in the Ley Creek drainage basin. Ley Creek is located north of the site and flows southwesterly to Onondaga Lake, which acts a regional discharge point. Ley Creek drains approximately 30 square miles of an area which is urbanized and industrialized and has large areas of man-made impermeable surfaces.

3.2 REGIONAL GEOLOGY

The bedrock underlying the region is the Silurian age Vernon shale. The Vernon shale is a horizontally interbedded red and green silty shale which was deposited in a coastal plain and shallow shelf environment (Fischer 1970). Residential wells installed in the Vernon shale reportedly yield approximately 20 gallons per minute (gpm) with some commercial well yields approaching 250 gpm (Kantrowitz 1970).

The surface geology of the region is characterized by Pleistocene age till, overlain by glacio-fluvial and glacio-lacustrine deposits. The glacial till unit consists of a dense reddish brown clay/silt matrix with a small amount of sand and gravel. Due to its dense

compact nature, the till generally exhibits low permeability. Overlying the till is a silt, clay and fine sand unit deposited in glacial Lake Iroquois during the recessional stage of Wisconsinan glaciation. The glacio-lacustrine sediments are vertically stratified with occasional lenses of fine to medium sand (Fischer 1970).

3.3 SITE HYDROGEOLOGY

Subsurface samples collected during this and previous investigations indicate that the geology at the site consists of glacio-lacustrine and till deposits. The glacio-lacustrine deposits vary in thickness from 10 to 30 feet across the Site and consist of clay, silt, fine sand, and variable amounts of gravel. The stratigraphy of these deposits is not well defined and most likely represent glacio-lacustrine sediments which have been reworked and deposited by more recent fluvial activity. The underlying till consists of a very dense reddish brown clay/silt matrix with small amounts of sand and gravel. Based on soil borings conducted during the RI, the thickness of the till in the vicinity of the landfill ranges from 5 to 15 feet (see Figure 4).

Groundwater occurs within the sandy silt unit above the till. Groundwater was also encountered in the till unit, although this unit did not yield a large volume of water during development, sampling, and hydraulic conductivity testing of monitoring well MW-4I. Bedrock groundwater was encountered in boring PMW-3I while attempting to install a monitoring well. Artesian conditions in the bedrock yielded 20 to 30 gallons per minute prior to sealing the borehole.

4.0 METHODOLOGY

In this section, the methodologies employed for completion of the RI tasks are reviewed. These methods are described in detail in the Field Sampling Plan (FSP) (Geraghty & Miller, Inc. 1994b). Deviations or changes from the FSP protocols are discussed in the appropriate sections. Laboratory analyses were performed in accordance with the NYSDEC Analytical Services Protocol (ASP) dated December 1991.

4.1 MAGNETOMETER SURVEY

A magnetometer survey was conducted across the western portion of the landfill in accordance with the protocols described in Section 4.11 of the RI work plan (Geraghty & Miller, Inc. 1994a). The survey was conducted in response to anecdotal information that drums may have been disposed of in the western portion of the landfill.

4.2 SOIL BORINGS

Eleven soil borings (SB-1 through SB-11) were completed during the soil boring program. Locations of these soil borings are identified on Figure 3. The soil borings were drilled by Parratt-Wolff, Inc., East Syracuse, New York, under the supervision of a Geraghty & Miller hydrogeologist.

The drilling was performed in accordance with Appendix A of the FSP (Geraghty & Miller, Inc. 1994b). A truck-mounted, hollow-stem auger drilling rig was used to drill the soil borings. At each boring location, a 6-inch diameter borehole was drilled. Soil samples were collected in continuous 2-foot intervals using a 2-inch (outside diameter) split-spoon sampler. Standard penetration tests (ASTM D1586) were performed throughout the entire length of each borehole. After retrieval of the split-spoon sampler, the soil sample was described and logged by the supervising hydrogeologist. Soil boring logs are provided in Appendix A.

Upon completion of the soil borings, the boreholes were backfilled with the drill cuttings and completed at grade with a cement plug. Soil boring locations were staked and labeled to allow subsequent identification.

4.2.1 Landfill Borings

Five borings (SB-1 through SB-5) were drilled into the landfill at the locations shown on Figure 3. The purpose of these borings was to characterize the fill material and determine the thickness of the landfill.

Soil samples were collected from each boring as described in Section 4.2. During drilling, the boreholes were screened for the presence of flammable concentrations of gases using a Gastech model 1214 combustible gas meter. Potentially flammable concentrations of gases were not detected (see soil boring logs in Appendix A). A split of each soil sample was retained for performance of a headspace analysis to aid in selection of samples for laboratory analysis. Headspace analyses were performed in accordance with the procedures described in Appendix A of the FSP (Geraghty & Miller, Inc. 1994b).

Based on the results of the headspace analyses and visual inspection, one soil sample was selected from each 20-foot depth interval of the borehole and submitted for laboratory analysis. The soil samples were analyzed for the Target Compound List Volatile Organic Compounds (TCL VOCs) and the Target Analyte List (TAL) inorganics. In addition, one soil sample from soil boring SB-3 was submitted for laboratory analysis of TCL semivolatile organic compounds (SVOCs) (excluding pesticides and polychlorinated biphenyls [PCBs]). Two soil samples for SVOCs analysis were originally proposed to be collected from this boring, however, the limited amount of soil separates (sand, silt, etc.) present in the samples precluded collection of a second sample.

4.2.2 Sludge Borings

Six borings (SB-6 through SB-11) were drilled at the locations shown on Figure 3. The purpose of these borings was to determine whether identifiable deposits of sludge material were present within the landfill and if so, what the thicknesses of these deposits were. The soil borings were terminated when fill material was encountered. Samples for laboratory analysis were not collected.

4.3 SEDIMENT/SOIL SAMPLING

Samples were collected on two occasions during the Remedial Investigation. Eight samples (SS-5, SS-6, SS-7, SS-8, SS-9, SS-10, SS-11, and SS-12) were collected on December 7, 1994 in accordance with Appendix C of the FSP (Geraghty & Miller, Inc. 1994b). Sampling locations are shown on Figure 6. To determine the potential impact to the wetland resulting from surface runoff from the site, an additional nine sediment samples (SED-1, SED-2, SED-3, SED-4, SED-5, SED-6, SED-2A, SED-4A and SED-6A) were collected on August 17, 1995 in response to a request from the NYSDEC dated June 5, 1995. The additional samples were collected in an effort to delineate the extent of lead impact to the wetlands between the outfall of Pond 2, and the culvert under Factory Avenue. Sampling locations for the August 1995 event are shown on Figure 7.

At each location, samples were collected from depths of 0 to 1 foot using a stainless-steel trowel. The December 1994 samples were submitted for laboratory analysis of target compound list (TCL) VOCs and target analyte list (TAL) inorganics as specified in the QAPP (Geraghty & Miller, Inc. 1994c). The August 1995 samples were submitted for analysis of TAL inorganics only.

Samples were also collected at two locations (BM-1 and BM-2) on the landfill berms in December 1994. These samples were submitted for laboratory analysis of TCL VOCs and PCBs. Sampling locations are shown on Figure 6.

4.4 SURFACE WATER SAMPLING

Surface water samples were also collected on two occasions during the RI. Seven surface water samples (SW-5, SW-6, SW-7, SW-8, SW-9, SW-10, and SW-12) were collected on December 7, 1994 in accordance with the protocols described in Appendix C of the FSP (Geraghty & Miller, Inc. 1994b). The locations of the surface water samples are identified on Figure 6. The purpose of the surface water sampling was to determine potential impacts to the wetlands adjacent to the landfill area. A surface water sample could not be collected from the sludge pond as this feature did not contain standing water at the time of sampling. Eight additional surface water samples (SW-1, SW-2, SW-3, SW-4, SW-5, SW-6, SW-2A, and SW-4A) were collected on August 17, 1995, as part of the delineation effort described previously. Sampling locations for the August 1995 event are shown on Figure 7.

Surface water samples were collected by slowly lowering a disposable glass flask into the surface water. Laboratory sample containers were filled by slowly pouring the sample from the flask into the container. The remainder of the sample was transferred into a clean glass beaker for field analysis. The temperature, turbidity, pH, and specific conductance of the sample were measured and recorded in field sampling logs (see Appendix B). The December 1994 surface water samples were submitted for laboratory analysis of TCL VOCs, TAL metals, and cyanide, and the August 1995 samples were submitted for TAL inorganics only.

4.5 MONITORING WELL DRILLING AND INSTALLATION

A total of three monitoring wells were installed during the monitoring well installation program.

Two monitoring wells (MW-6 and MW-7) were installed, bridging the water-table in the shallow glacio-lacustrine deposits, at the locations shown on Figure 3. These monitoring wells were installed to complete a groundwater monitoring network in the first water-bearing unit at the site.

One monitoring well (MW-4I) was installed in the till unit beneath the site to provide water-level information and geologic characterization of this unit. Proposed till unit monitoring wells adjacent to MW-1 and MW-3 could not be installed due to the small thickness of till encountered (less than 5 feet) at these locations. Although these wells could not be installed, soil samples were collected for geologic description and laboratory analysis. Soil samples from borings PMW-3I and MW-4I were collected for permeability testing (ASTM D5084) and laboratory analyses as specified in the QAPP (Geraghty & Miller, Inc. 1994c). Results of the permeability testing are provided in Appendix C.

The monitoring wells were drilled and installed in accordance with the protocols described in Appendix A of the FSP (Geraghty & Miller, Inc. 1994b).

Monitoring wells were drilled using the hollow-stem auger method. An 8-inch diameter borehole was advanced into the water table. Soil samples were collected in continuous 2-foot intervals using a 2-inch (outside diameter) split-spoon sampler. Standard penetration tests (ASTM D1585-74) were performed throughout the entire length of the borehole. A split of each soil sample was retained for performance of a headspace analysis to aid in selection of samples for laboratory analysis. Headspace analyses were performed in accordance with the procedures described in Appendix A of the FSP (Geraghty & Miller, Inc. 1994b). Soil samples were described and logged by the supervising hydrogeologist. Soil boring logs are presented in Appendix A. Soil samples from each borehole were analyzed for TCL VOCs and TAL inorganics.

When the desired depth was reached, a 2-inch diameter monitoring well was installed through the hollow-stem augers. Each well was constructed of a 5-foot length of 2-inch diameter, PVC well screen with 0.010-inch slot openings and 6-inch diameter, flush-joint, PVC riser pipe. As the augers were gradually removed, the annular space around the well screen was backfilled with No. 1 graded sand to approximately one foot above the top of the well screen. A bentonite pellet seal, approximately two feet thick, was installed above the sand pack. The remainder of the annular space was sealed with a cement/bentonite grout that was emplaced through a tremie pipe to just below ground surface. The well head was completed with a steel protective casing and locking cap. A cement surface pad was constructed around the protective casing to direct surface runoff away from the well. Well construction logs are presented at the end of Appendix A.

4.6 SURVEYING

After completion, the ground surface and monitoring well casings were surveyed to U.S. Geological Survey (USGS) vertical datum by a New York State-licensed land surveyor. The surveys were performed to an accuracy of 0.01 foot. Ground-surface and measuring-point elevation data are presented in Table 1.

4.7 GROUNDWATER SAMPLING

Three newly installed monitoring wells (MW-4I, MW-6, and MW-7) and five previously existing monitoring wells (MW-1, MW-2, MW-3, MW-4, and MW-5) were sampled in January 1995 and August 1995 in accordance with the protocols described in Appendix B of the FSP (Geraghty & Miller, Inc. 1994). Laboratory analyses were performed by IEA, Inc. of Monroe, Connecticut. The August round of groundwater sampling was performed pursuant to a request from the NYSDEC in a comment letter dated June 5, 1995.

Groundwater sampling was performed by a Geraghty & Miller hydrogeologist. Prior to sampling, three to five times the volume of standing water in the well casing was evacuated using a centrifugal pump. Sampling was then conducted using a Teflon bailer. Water sampling logs are provided in Appendix D. Groundwater samples for the January 1995 round were submitted for TCL VOCs analysis and TAL inorganics analysis using NYSDEC ASP Methods. Groundwater samples for the August 1995 sampling round were submitted for TAL inorganics only.

4.8 HORIZONTAL DIRECTION OF GROUNDWATER FLOW

A summary of the water-level elevation data collected during the groundwater sampling is presented in Table 1. This elevation data was used to prepare a water-level elevation contour map for January 5, 1995 (see Figure 5).

The contour maps indicates that the direction of the horizontal component of groundwater flow in the first water-bearing unit is north towards Ley Creek. The hydraulic gradient was determined to be approximately 0.03 ft/ft.

4.9 HYDRAULIC CONDUCTIVITY TESTING

In-situ hydraulic conductivity tests were performed on Monitoring Wells MW-1, MW-2, MW-3, MW-4, MW-4I, MW-5, MW-6, and MW-7 to determine general conductivity values for the formations immediately surrounding the screened intervals of these wells. The tests were conducted in accordance with ASTM D4044.

Prior to testing each well, static water levels were measured using an electronic water level indicator. A volume of water was then "instantaneously" removed from each of the wells using a clean Teflon bailer and dedicated polypropylene rope. As the water recovered to static level within the wells, the recovery rate was recorded using an electronic water level

indicator and stopwatch. Resulting water level recovery data was analyzed using AQTESOLV, a Geraghty & Miller software program (based on the Bouwer and Rice method) for aquifer testing solutions. AQTESOLV plots drawdown versus time on a semi-logarithmic graph. A best fit line is then drawn through the data curve and the slope of the line is calculated. The slope of the line is equivalent to the hydraulic conductivity of the formation materials. A steep line indicated relatively high hydraulic conductivities, a flatter line indicates much lower hydraulic conductivities. Time-Drawdown graphs and calculated hydraulic conductivities are provided in Appendix E.

4.10 QUALITY ASSURANCE AND QUALITY CONTROL

Field sampling activities were conducted in accordance with the QA/QC requirements described in Section 5.3.6 of the QAPP (Geraghty & Miller, Inc. 1994c). A summary of the QA/QC requirements is presented below.

4.10.1 Field Blanks and Trip Blanks

Field blanks were analyzed to evaluate potential cross-contamination of samples by field sampling equipment. The frequency of field blank preparation was one per equipment type per day. Field blanks were prepared by pouring analyte-free water over sampling apparatus and into an appropriate sample container. Field blanks were collected for VOC analysis. Laboratory-prepared trip blanks of analyte-free water were submitted for VOC analysis with each shipment of groundwater samples.

4.10.2 Duplicate Samples

Duplicate samples were analyzed to evaluate the reproducibility of the groundwater sampling technique. Duplicates were collected at a frequency of one per 10 groundwater samples.

4.10.3 Matrix Spike/Matrix Spike Duplicates

Matrix spikes (MS) were analyzed to determine the effectiveness of the method for the matrix being analyzed. The matrix spike sample is fortified (spiked) with known quantities of specific compounds and subjected to the entire analytical procedure. The matrix spike duplicate (MSD) is a second aliquot of the same matrix that is spiked to determine the precision of the method. MS/MSD samples of soil and groundwater were analyzed at a frequency of one per 20 samples for each matrix sampled.

4.11 CHEMICAL DATA VALIDATION

The chemical data from the soil, sediment, surface water, and groundwater samples collected at the site were validated by a Geraghty & Miller chemist. Validation of the VOC and SVOC data was performed following the "USEPA Contract Laboratory Program, National Functional Guidelines for Organic Data Review", dated June 1991 (Draft). PCB data was validated following the "United States Environmental Protection Agency (USEPA) Region II Standard Operating Procedure (SOP)", dated January 1992. Inorganic data was validated following the "USEPA Laboratory Data Validation Functional Guidelines for Evaluating Inorganic Analyses", dated July 1988 and the NYSDEC ASP. The data validation consisted of a systematic review of the analytical results and quality control documentation to ensure the data are technically valid and defensible.

The results of the validation performed on the laboratory analytical data from the soil, sediment, groundwater, and surface water samples collected are provided in Appendix F. The quality of the data was acceptable with the appropriate qualifications described in Appendix F and summarized in Tables 2 through 20. Therefore, the TCL VOC, TCL SVOC, TAL inorganic, and PCB data can be classified as quantitative and are considered valid and acceptable, except those parameters which have been qualified as estimated. The data for the compounds that were estimated should be considered qualitative.

5.0 FIELD RESULTS

Based on the data generated during completion of the RI and observations made in the field, the results for each part of the RI are presented in the appropriate sections below.

5.1 MAGNETOMETER SURVEY

A magnetometer survey was conducted across the western portion of the landfill in November 1994. The survey was conducted in response to anecdotal information that drums may have been disposed of in this portion of the landfill. A report describing the findings of this survey was submitted to the NYSDEC in January 1995 (Geraghty & Miller, Inc. 1995a). The results indicated that ten magnetic anomalies were identified during the investigation. Two of these ten anomalies were determined to exhibit amplitude and scattering characteristics that might suggest buried drums. A work plan to conduct exploratory test pits at several of the anomalies has been submitted for NYSDEC approval (Geraghty & Miller, Inc. 1995b).

5.2 LANDFILL THICKNESS

As discussed in Section 4.2.1, five borings (SB-1 through SB-5) were drilled into the landfill at the locations shown on Figure 3 to characterize the fill material and determine the thickness of the landfill. Soil boring logs are provided in Appendix A.

Soil borings SB-1, SB-2, and SB-3 were drilled in the western portion of the landfill. Landfill thickness at these locations were 16 feet, 28 feet, and 22 feet, respectively. Fill material in these borings consisted of china scrap, gypsum molds, refractory materials, cinders, wood, and some fiberglass insulation. Soil borings SB-4 and SB-5 located in the vicinity of the settling ponds indicated fill material thicknesses of 4 feet. Fill material in these borings consisted of china scrap and small amounts of sludge.

5.3 SLUDGE BORINGS

As discussed in Section 4.2.2, six borings (SB-6 through SB-11) were drilled at the locations shown on Figure 3 to determine whether identifiable deposits of sludge were present within the landfill.

Sludge material was encountered just below the surface in borings SB-6, SB-8, SB-9, SB-10, and SB-11. The thickness of sludge material in these borings was 4-inches, 4.5 feet, 1.5 feet, 11 feet, and 5 feet, respectively. Soil boring logs are provided in Appendix A.

5.4 HYDRAULIC CONDUCTIVITY TESTING

In-situ hydraulic conductivity tests were performed on monitoring wells MW-1, MW-2, MW-3, MW-4, MW-4I, MW-5, MW-6, and MW-7. The tests were performed in accordance with ASTM D4044 as discussed in Section 4.9. The resulting data was analyzed using the Bower and Rice method for partially penetrating wells to determine the hydraulic conductivity of the geologic formation adjacent to the tested well (Bouwer and Rice 1976). A graphical presentation of the data is provided in Appendix E. Calculated hydraulic conductivity values for each monitoring well are presented in Table 14. Hydraulic conductivity values for the upper sand and silt unit range from 6.27×10^{-5} feet per minute (ft/min) (MW-1) to 2.03×10^{-3} ft/min (MW-4). The average hydraulic conductivity for the upper unit is 4.60×10^{-4} ft/min (2.34×10^{-4} centimeters per second [cm/sec]). This value is within the typical range of a sandy silt (1×10^{-3} cm/sec to 1×10^{-5} cm/sec) (Freeze and Cherry 1979).

6.0 GROUNDWATER, SOIL, SURFACE WATER, AND SEDIMENT QUALITY DATA

The following sections summarize the validated analytical data collected during December 1994, January 1995, and August 1995 at the Syracuse China site. Copies of the original IEA, Inc. laboratory reports are provided in Appendix G.

6.1 GROUNDWATER QUALITY DATA

The January 1995 validated VOC and inorganic parameter (cyanide and dissolved and total metals) water quality data collected from each new (MW-41, MW-6, and MW-7) and existing (MW-1, MW-2, MW-3, MW-4, and MW-5) monitoring wells sampled are summarized in Tables 2 and 3, respectively. The inorganic groundwater data collected during the August 1995 sampling event is presented in Table 15.

6.1.1 Volatile Organic Compounds

The analytical results (Table 2) indicate that VOCs were not detected above the method quantitation limit (10 ug/L) in the groundwater samples collected. The method quantitation limit is the minimum concentration of a compound that can be confidently measured and reported by the laboratory when using the analytical method specified. The actual quantitation limits reported by the laboratory for the groundwater samples (10 ug/L) were higher than the ideal target quantitation limits listed in the QAPP (1 to 3 ug/L). The ideal limits are not always achievable because quantitation limits are dependent upon the sample matrix, the USEPA method used for analysis, and the laboratory confidence in the measurement.

6.1.2 Inorganic Parameters, January and August 1995

The work plan specified the collection of both dissolved (filtered) and total (unfiltered) samples for metals analysis if the turbidity measured at the time of groundwater sampling exceeded 50 nephelometric turbidity units (NTUs). Each groundwater sample collected had a turbidity greater than 50 NTUs; therefore, both dissolved and total samples were collected from each location sampled.

Historically, filtration of groundwater samples has served several important functions in groundwater quality monitoring. Filtration helps to minimize the problems of data variability that commonly results from variable levels of suspended sediment in individual samples. In addition, filtration of samples makes it possible to determine actual dissolved concentrations of metals in groundwater that have not been artificially elevated as a result of sample preservation (acidification), which can potentially leach metals from the surfaces of suspended sediments and/or colloids. Since the groundwater samples collected had turbidities greater than 50 NTUs, the total (unfiltered) analyses are probably not representative of the dissolved concentrations of metals in groundwater at the site. However, the following discussions include the results of both the dissolved (filtered) and total (unfiltered) analyses.

Table 3 presents both total (non-filtered) and dissolved (filtered) inorganic analytical results from January 1995. The (filtered) analytical metals results indicate that five metals (iron, magnesium, manganese, sodium, and zinc) were detected in excess of their respective NYSDEC Division of Water Technical and Operational Guidance Series (TOGS) 1.1.1-Ambient Water Quality Standards and Guidance Values. A summary of the dissolved (filtered) metals concentrations detected exceeding the standards and guidance values are presented in Table 4.

The following ranges of dissolved concentrations were detected above the NYSDEC TOGS 1.1.1 Standards and Guidance Values for the January 1995 sampling event: iron,

0.72 mg/L in MW-5 to 106 mg/L in MW-4I; magnesium, 44.3 mg/L in MW-3 to 165 mg/L in MW-4I; manganese, 0.46 mg/L in MW-6 to 4.38 mg/L in MW-4I; sodium, 21.2 mg/L in MW-1 to 69.5 mg/L in MW-5. Zinc was detected at a concentration of 3.78 mg/L in MW-4I. The water quality standards and guidance values for iron, magnesium, manganese, sodium, and zinc are secondary drinking water standards and are based on aesthetic criteria (taste, color, etc.) rather than toxicity.

As can be expected (i.e. from suspended sediment), the total (unfiltered) metals samples contained higher concentrations for the five metals listed above, plus detection of four additional metals; arsenic, copper, lead, and vanadium (Table 19). Arsenic ranged between 0.027 mg/L in wells MW-4 and MW-4I, to 0.062 mg/L in MW-3 (duplicate); copper was detected at a concentration of 0.356 mg/L in MW-6; lead ranged between 0.051 mg/L in MW-4, to 0.254 mg/L in MW-3 (duplicate); and vanadium ranged between 0.074 mg/L in MW-3 and MW-4I, to 0.24 mg/L in MW-2.

The lead data reported for the January 1995 sampling of MW-4I were deemed unusable upon data validation. Subsequently, a second round of groundwater sampling was conducted on August 17, 1995, exclusively for inorganic parameters. Both filtered and non-filtered samples were collected in August 1995, and analytical results from both analyses are presented in Table 15.

The August 1995 dissolved (filtered) analytical metals results (Table 15) indicate that four metals (iron, magnesium, manganese, and sodium) were detected in excess of their respective NYSDEC TOGS 1.1.1-Ambient Water Quality Standards and Guidance Values. A summary of the dissolved (filtered) metals concentrations detected exceeding the standards and guidance values is presented in Table 18.

The following ranges of dissolved concentrations were detected above the NYSDEC TOGS 1.1.1 Standards and Guidance Values: iron, 0.59 mg/L in MW-4 to 5.2 mg/L in MW-4I; magnesium, 35.6 mg/L in MW-1 to 54.0 mg/L in MW-2; manganese, 0.472 mg/L

in MW-3 to 2.02 mg/L in MW-4; and sodium, 26.8 mg/L in MW-4I to 62.5 mg/L in MW-5. Zinc was not detected above the standard in the August 1995 dissolved samples.

Table 20 presents a summary of total metals concentrations exceeding the TOGS 1.1.1 standards for the August 1995 sampling event. Nine metals were reported above the standards as follows: arsenic, ranging from 0.0276 mg/L in MW-6 to 0.107 in MW-3; copper, ranging from 0.038 mg/L in MW-7I to 0.276 mg/L in MW-6; iron, ranging from 1.89 mg/L in MW-5 to 126 mg/l in MW-3; lead, ranging from 0.0565 mg/L in REP-1 to 0.292 mg/L in MW-7; magnesium, ranging from 41.5 mg/L in MW-1 to 207 mg/L in MW-3; manganese, ranging from 1.45 mg/L in MW-7 to 5.72 mg/L in MW-4; sodium, ranging from 21.7 mg/L in REP-1 to 68 mg/L in MW-5; vanadium, ranging from 0.016 mg/L in MW-2 to 0.0967 mg/L in MW-4I; and zinc, ranging from 0.053 mg/L in MW-4 to 0.419 mg/L in MW-4I.

Cyanide was not detected above the method quantitation limit (10 ug/L) in the groundwater samples collected in January 1995, and therefore was not analyzed in August 1995.

Groundwater in Onondaga County is typically hard water which exhibits naturally occurring high concentrations of iron, manganese, sodium, and magnesium due to the geologic composition of the shale bedrock and glacial overburden material. The concentrations of metallic salts reported above are within the expected ranges for Onondaga County (Kantrowitz 1970).

6.2 SOIL QUALITY DATA

The validated VOC, inorganics, and semivolatile organic compound (SVOC) data from the nine soil samples collected at the site are summarized in Tables 5, 6, and 7, respectively.

6.2.1 Volatile Organic Compounds

The analytical results (Table 5) indicate that VOCs were not detected above the method quantitation limit with the exception of acetone, which was detected in soil samples MW-4I (38 ug/kg), MW-6 (39 ug/kg), MW-7 (150 ug/kg), SB-4 (20 ug/kg), and SB-5 (22 ug/kg) at the concentration indicated. Acetone is a common laboratory solvent and its detection is most likely due to laboratory contamination.

6.2.2 Inorganic Parameters

The metals results (Table 6) indicate that aluminum, calcium, chromium, iron, lead, magnesium, manganese, and zinc were detected in each of the nine samples analyzed; arsenic (five samples), copper (four samples), nickel (four samples), vanadium (two samples), and barium (one sample) were also detected in selected soil samples. The highest concentrations of arsenic (5.9 mg/kg), barium (57.2 mg/kg), iron (16,800 mg/kg), nickel (16.2 mg/kg), and vanadium (15.2 mg/kg) were detected in soil sample SB-1; the highest concentrations of aluminum (6,690 mg/kg), calcium (55,600 mg/kg), lead (426 mg/kg), and zinc (36.7 mg/kg) were detected in soil sample SB-3; the highest concentrations of chromium (11.1 mg/kg) and manganese (458 mg/kg) were detected in soil sample MW-6; and the highest concentration of magnesium (17,200 mg/kg) was detected in soil sample PMW-3I.

The metals concentrations were compared to recommended soil cleanup objectives and eastern United States background concentrations for metals, obtained from the January 1994 NYSDEC Technical Assistance Guidance Memorandum (HWR-94-4046) for comparative purposes. The results indicated that the concentrations of metals detected are within the range of eastern United States background concentrations, with the exception of lead, which was detected at a concentration of 426 mg/kg in sample SB-3. It should be noted that background concentrations for lead vary widely. Average concentrations in undeveloped, rural areas may range from 4 to 61 mg/kg. However, average concentrations in metropolitan and suburban areas or near highways are higher and typically range from 200

to 500 mg/kg (NYSDEC 1994). The lead concentrations detected in each soil sample collected are illustrated on Figure 6.

Cyanide was not detected above the method quantitation limit in the soil samples collected.

6.2.3 Semivolatile Organic Compounds

The analytical results from sample PSB-3 (Table 7) indicate that SVOCs were not detected above the method quantitation limit.

6.3 SURFACE WATER QUALITY DATA

The December 7, 1994 validated VOC and inorganic parameter (cyanide and total metals) water quality data collected from each surface water sampling location (SW-5, SW-6, SW-7, SW-8, SW-9, SW-10, and SW-12) are summarized in Tables 8 and 9, respectively.

6.3.1 Volatile Organic Compounds

The analytical results (Table 8) indicate that VOCs were not detected above the method quantitation limit with the exception of chloroform, which was detected at a concentration of 10 ug/L in surface water sample SW-10. Chloroform is commonly found in treated water supplies and does not likely reflect site contamination.

6.3.2 Inorganic Parameters, December 1994 and August 1995

The total metals results (Table 9) indicate that two metals, lead and zinc, were detected in excess of NYSDEC surface-water standards during the December 1994 sampling event. The surface-water standard for lead was calculated to be 6.4 ug/L based on a water hardness of 200 mg/L (as calculated from the average calcium and magnesium concentrations detected in SW-5, SW-6, and SW-12). Lead was detected above the 6.4 ug/L standard at

6.4.2 Inorganic Parameters

The December 1994 metals results (Table 11) indicate that eight metals (arsenic, chromium, copper, lead, mercury, nickel, silver, and zinc) were detected above NYSDEC (1993b) sediment criteria (see Table 13) contained in the NYSDEC Division of Fish and Wildlife Technical Guidance for Screening Contaminated Sediments.

A second round of samples were collected on August 17, 1995, pursuant to the Department request comment letter dated June 5, 1995. The results of this sampling event are presented in Table 17. Analytical results from the second sampling event indicate that the same eight metals listed above were detected above NYSDEC sediment criteria.

Note, however, that sampling results in excess of the sediment criteria must be viewed against the intent of the guidance document. The technical guidance document for screening contaminated sediment provides the NYSDEC with a constructive and objective test to identify sediments that may or may not be of particular concern. Although sampling results may show guidance criteria exceedence, the development of cleanup levels is based upon a balancing of environmental, technical, economic, and legal considerations (NYSDEC 1993b). These considerations will be discussed in the upcoming Feasibility Study. A more complete discussion of the sediment/soil metal results is contained in Section 7.2.4 of the risk assessment data review.

6.4.3 Polychlorinated Biphenyls

The analytical results (Table 12) indicate that PCBs were not detected above the method quantitation limit in the two sediment samples collected (BM-1 and BM-2).

7.0 RISK ASSESSMENT

A risk assessment addresses potential human health and ecological risks associated with chemical constituents present in environmental media at a site under current and expected future site conditions and provides a consistent approach for determining if remedial action is warranted at a site. Thus, the risk assessment is a key component of the RI. Its primary objective is to identify constituents of potential concern (COCs), describe potential current and future exposure pathways and receptors, and evaluate potential risks. This section focuses on human health risks. Ecological resources were addressed in the Fish and Wildlife Habitat Impact Analysis report (Terrestrial Environmental Specialists, 1995).

A risk assessment may be qualitative, quantitative, or a combination of both. This risk assessment primarily will provide a qualitative assessment consistent with the United States Environmental Protection Agency's (USEPA) Superfund Accelerated Cleanup Model (SACM) and guidance on streamlining the RI/FS process at landfill sites (USEPA, 1990). This approach encourages the use of presumptive remedies such as capping and containment for landfill sites. Therefore, in most cases, a detailed quantitative risk assessment is not required.

7.1 BACKGROUND INFORMATION

The site background and physical setting information was presented in Sections 2.0 and 3.0 of this report and is used to identify potential exposure pathways and receptors in Section 7.3.3. The 13-acre landfill was used to dispose various debris associated with product manufacturing. Settling ponds within the landfill were used to contain effluent from the wastewater treatment facility (Figure 3). Sludges from these ponds were subsequently disposed in the landfill. Wastewater ultimately is discharged to the wetland area on the northeast side of the landfill under a SPDES permit.

Surface water from the wetland area discharges through a culvert which passes under Factory Avenue to the north and discharges to Ley Creek. Ley Creek is a Class B fresh surface water. The best usages for Class B waters are primary and secondary contact recreation and fishing and should be maintained to support fish propagation and survival (NYSDEC 1991). Primary contact recreation includes swimming, water skiing, and diving; secondary contact recreation includes fishing and boating.

7.2 DATA REVIEW

The primary purpose of this section is to identify COCs. COCs will be selected for each medium based on the frequency of detection, range of concentrations, comparison to background concentrations, general toxicity, comparison to regulatory standards or criteria, and the expected source(s). For example, constituents which occur infrequently at low concentrations are unlikely to pose a health concern. Background concentrations are particularly important for naturally occurring constituents such as metals. When site-specific background data are unavailable, regional data are useful for determining if concentrations are within the expected range. It is also important to determine if the presence of a particular constituent is likely related to a release from the site.

The RI/FS Work Plan (Geraghty & Miller, 1994) for the Syracuse China site reviewed the soil, surface-water, and groundwater data collected between 1986 and 1992. Based on these data, the primary environmental issues addressed by the RI included lead in subsurface soils and sludges, VOCs in surface water, surface water transport of impacted sediments/soils, and characterization of hydrogeologic conditions. This risk assessment focuses on the data collected during the RI as reported in Section 6.0. These data are reviewed briefly below.

7.2.1 Groundwater

On January 5, 1995, eight monitoring wells were sampled and analyzed for VOCs, cyanide, and total and dissolved metals (Tables 2 and 3). Results were comparable to previous data reviewed (Geraghty & Miller 1994a). Low concentrations (below 10 ug/L) of xylenes and ethylbenzene were detected in the groundwater from MW-3, MW-6, and MW-7; these concentrations were below the method quantitation limit. In addition, these concentrations are below the New York State (NYS) Class GA groundwater standard for these constituents and do not pose a threat to public health. Pursuant to a request from the NYSDEC dated June 5, 1995, the wells were resampled on August 17, 1995 and analyzed exclusively for inorganic parameters.

Metals (total and dissolved) were detected in the groundwater samples collected in January 1995 (Table 3) and August 1995 (Table 15). Dissolved metals were reported in fewer samples and indicate that most of the metals in groundwater are bound to aquifer material. MW-4I contained the highest concentrations of dissolved metals with the exception of lead. January 1995 data from MW-4I are somewhat suspect because dissolved concentrations were consistently higher than total concentrations (Table 3). However, the August 1995 inorganic data shows the reverse trend in which the dissolved concentrations are significantly lower than the total metal results, which would be expected since most of the suspended solids are removed during filtering. MW-6, which is hydraulically upgradient from the site, contained the highest total concentrations for eight metals. MW-1, which is also upgradient from the site, contained the highest dissolved lead concentration (0.023 mg/L) which is below NYSDEC groundwater standards. The NYSDEC Class GA groundwater standard for lead is .025 mg/L. MW-7 contained the highest total lead concentration (0.292 mg/L) reported for both sampling rounds. Although several metals (total concentrations) exceeded groundwater standards, dissolved concentrations were generally below standards and indicate minimal impacts to groundwater at the site. Therefore, COCs were not selected.

7.2.2 Soil

In November 1994, nine subsurface soil samples (4 to 30 ft below land surface) were collected from the site and analyzed for VOCs and metals (Tables 5 and 6). One subsurface soil sample (PSB-3) was analyzed for SVOCs (Table 7). Four VOCs (acetone, 2-butanone, trichloroethene, and toluene) were detected at estimated concentrations ranging from 2 to 150 ug/kg. Toluene also was detected in one field blank. These low concentrations do not pose a health risk based on a comparison to NYSDEC (1994) recommended soil cleanup objectives. Metal concentrations were within the reported background concentrations for US soils (USGS, 1984) with the exception of lead detected at 426 mg/kg in SB-3. Average lead concentrations in urban/suburban areas or near highways typically range from 200 to 500 mg/kg (NYSDEC 1994). Based on these data, lead was identified as the only COC in soil.

7.2.3 Surface Water

In December 1994, seven surface-water samples were collected and analyzed for VOCs, cyanide, and total metals (Tables 8 and 9). Four of these samples were from the settling ponds and three were from the wetland area north of the site (Figure 3). Chloroform (8 to 10 ug/L) and bromodichloromethane (BDCM) (2 ug/L) were the only VOCs detected. The detected concentrations were below the method quantitation limit. Chloroform and BDCM are commonly found in treated water supplies and do not likely reflect site contamination.

Metal concentrations in surface water were not highly variable and were generally below NYSDEC surface-water standards with the exception of lead and zinc. Zinc was consistently detected above the surface-water standard of .03 mg/L, based on protection of aquatic life. The surface-water standard for lead was calculated to be .0064 mg/L based on a water hardness of approximately 200 mg/L (as calculated from on the average concentrations of calcium and magnesium in SW-5, SW-6, and SW-12). Surface-water standards also are based on the acid soluble form of the metal and are not necessarily

directly comparable to total concentrations. Sample SW-8 from Pond 2 contained the highest concentrations of zinc. SW-12, near the SPDES outfall contained the highest concentration of lead. Therefore, lead and zinc were identified as COCs in surface water.

7.2.4 Sediment/Soil

In December 1994, eight samples were collected from the settling ponds and wetland area and analyzed for VOCs and metals (Tables 10 and 11). Two samples from the landfill berms were analyzed for VOCs and PCBs (Tables 10 and 12). Five VOCs were detected in two or three samples at estimated concentrations ranging from 2 to 36 μg/kg. These concentrations were below the method quantitation limit. Metals, with the exception of lead, were within the background ranges for soil (USGS 1984); however, eight metals exceeded NYSDEC (1993b) guidance for determining sediment criteria (Table 13). In August 1995, nine samples were collected from the wetland area and analyzed for metals only; lead concentrations in the nine samples exceeded the NYSDEC (1993b) sediment criteria guidance. It should be noted that background concentrations for lead vary widely. Average concentrations in undeveloped, rural areas may range from 4 to 61 mg/kg. However, average concentrations in metropolitan and suburban areas or near highways are higher and typically range from 200 to 500 mg/kg (NYSDEC 1994). Sediment criteria include a lowest effect level (LEL) and severe effect level (SEL). Concentrations above the LEL are considered evidence of moderate impacts. If both criteria are exceeded, the sediment is considered severely impacted; however, site-specific conditions may affect the bioavailability and toxicity of metals in sediment. Based on these criteria, lead and zinc have the greatest potential for impacts and were selected as COCs. Copper and silver were not selected as COCs based on the limited number of samples above both the LEL and the SEL. These metals were not detected at concentrations above groundwater and surface-water standards and were not associated with site use.

The lowest lead and zinc concentrations reported for both sampling events were 51.9 mg/kg and 57.1 mg/kg, respectively at SS-6 on the far end of the wetland area. Maximum

concentrations for lead and zinc were 6,010 mg/kg at SED-6A (August 1995) near the SPDES outfall and 796 mg/kg at SED-2 (August 1995) near Factory Avenue, respectively. Concentrations in sediments/soils did not correlate well with the surface-water concentrations. For example, although SS-6 had the lowest lead concentration in sediment/soil SW-6 had one of the higher lead concentrations in surface water. Conversely, SED-6A (August 1995) had the highest lead concentration in sediment/soil but nearby SW-5 (December 1994) had one of the lowest lead concentrations in surface water.

It is noted that measurements for sediment criteria must be viewed against the intent of the guidance document. The technical guidance document for screening contaminated sediment provides the NYSDEC with a constructive and objective test to identify sediments they may or may not be of particular concern. Although COCs have been identified for risk analysis purposes, the development of cleanup levels is based upon a balancing of environmental, technical, economic, and legal considerations (NYSDEC 1993b). These considerations will be discussed in the upcoming Feasibility Study.

7.3 EXPOSURE ASSESSMENT

This section presents an overview of the potential exposure pathways associated with the site. Consistent with the presumptive remedy for the site, and the screening risk assessment approach, a complete quantitative exposure assessment was unnecessary. Rather, this section presents a brief discussion of the sources and receiving media, fate and transport of the COCs, identifies the potential exposure points and receptors, and provides a qualitative discussion of exposure.

7.3.1 Sources and Receiving Media

Section 2.2.1 identified seven solid waste types which were disposed at the Syracuse China site. These included biscuit china scrap, glost china scrap, gypsum mold scrap, refractory scrap, wastewater filter cake, construction and demolition materials, and material

concentrations for lead and zinc were 6,010 mg/kg at SED-6A (August 1995) near the SPDES outfall and 796 mg/kg at SED-2 (August 1995) near Factory Avenue, respectively. Concentrations in sediments/soils did not correlate well with the surface-water concentrations. For example, although SS-6 had the lowest lead concentration in sediment/soil SW-6 had one of the higher lead concentrations in surface water. Conversely, SED-6A (August 1995) had the highest lead concentration in sediment/soil but nearby SW-5 (December 1994) had one of the lowest lead concentrations in surface water.

It is noted that measurements for sediment criteria must be viewed against the intent of the guidance document. The technical guidance document for screening contaminated sediment provides the NYSDEC with a constructive and objective test to identify sediments they may or may not be of particular concern. Although COCs have been identified for risk analysis purposes, the development of cleanup levels is based upon a balancing of environmental, technical, economic, and legal considerations (NYSDEC 1993b). These considerations will be discussed in the upcoming Feasibility Study.

7.3 EXPOSURE ASSESSMENT

This section presents an overview of the potential exposure pathways associated with the site. Consistent with the presumptive remedy for the site, and the screening risk assessment approach, a complete quantitative exposure assessment was unnecessary. Rather, this section presents a brief discussion of the sources and receiving media, fate and transport of the COCs, identifies the potential exposure points and receptors, and provides a qualitative discussion of exposure.

7.3.1 Sources and Receiving Media

Section 2.2.1 identified seven solid waste types which were disposed at the Syracuse China site. These included biscuit china scrap, glost china scrap, gypsum mold scrap, refractory scrap, wastewater filter cake, construction and demolition materials, and material

handling materials (Geraghty & Miller, 1994). The available analytical data for the site indicate that lead is the primary COC with respect to human health. Zinc was identified as a COC based on potential impacts to aquatic life. VOCs and several other metals were detected in site samples but the frequency and range of concentrations did not indicate that the site was likely an appreciable source of these constituents or that they posed a health concern.

Historically, potential sources of lead and zinc may have included pigment and glazing operations and wastewater treatment sludge. This risk assessment focuses on human health issues because ecological issues have been discussed in a separate report (Terrestrial Environmental Specialists, 1995). Therefore, the following sections emphasize potential impacts of lead on human health. The Risk Characterization section of this chapter will provide a brief review of ecological issues based on a comparison of site data to the water quality and sediment standards and criteria.

Lead was detected in each of the media sampled; however, soil samples from the site generally did not contain elevated concentrations of lead compared to reported background concentrations. Groundwater and surface-water samples generally contained total lead concentrations above NYS groundwater and surface-water standards. Dissolved concentrations of lead in groundwater did not exceed NYS Class GA groundwater standards. Sediments/soils in the wastewater settling ponds and in the wetlands near the SPDES outfall contained the highest concentrations of lead. Lead was identified as a COC in soil, surface-water, and sediments/soils.

ED_006185_00000992-00041

7.3.2 Environmental Fate and Transport of Lead

Lead is a naturally occurring element and is ubiquitous in the environment. Significant anthropogenic sources of lead release to the environment include past gasoline and oil combustion; lead, copper, and zinc smelters; and lead products manufacture. Gasoline combustion once accounted for about 90 percent of lead emissions to the atmosphere; however, due to the elimination of leaded gasoline, municipal waste incineration and primary lead smelting are the current major sources of lead emissions. As a result of past and current lead emissions, most food, water, and air contain detectable concentrations of lead and serve as sources of background exposure to the general population.

Atmospheric fallout is the primary source of lead found in most surface waters. Lead tends to form insoluble compounds with the naturally occurring anions (hydroxide, sulfide, carbonate, sulfate, etc.) in surface water (USEPA, 1979). Lead and its compounds also form complexes with organic matter and are adsorbed by sediments. Precipitation out of solution is an important process which removes lead from surface water. Solubility is dependent on the form of lead, pH, temperature, and salt content; however, natural compounds of lead have low solubility and generally are not highly mobile in the environment.

Inorganic lead generally is adsorbed and retained in the soil. Some lead compounds may leach from soils with low organic matter, clay content, and pH. Erosion and overland flow would be the primary transport mechanism for inorganic lead in soil. Uptake by plants is limited. Studies have indicated that only 0.003 to 0.005 percent of total lead in soil is available for plant uptake and only about 3 percent of the lead taken up by the roots is translocated to other plant tissues (Kabata-Pendias and Pendias, 1992).

Lead generally does not bioconcentrate in fish tissue. Shellfish and algae may bioconcentrate lead; however, concentrations in organisms higher in the food chain are usually lower. Thus lead is not biomagnified in the food chain. A reported median bioconcentration factor for fish is 42 liters per kilogram (L/kg) (Agency for Toxic Substances and Disease Registry [ATSDR], 1991).

7.3.3 Exposure Pathways and Receptors

Under current conditions, on-site exposures do not appear to pose a significant risk. The shallow groundwater is not used near the site and public access is controlled by a fence and the wetlands. The landfill is no longer active and site workers do not normally visit this area. Workers involved in monitoring the SPDES outfall could be exposed to constituents in soil, surface water, or sediments. Such exposures would likely be limited to dermal contact; although, some incidental ingestion could occur. Overall, exposure would be limited by the short duration of contact with affected media and the generally low concentrations detected in soil and surface water. Although lead concentrations in sediment near the SPDES outfall are high, routine contact with the sediment by a site worker is not expected. Furthermore, exposure to lead would be low because lead is not absorbed readily across the skin or from the adult gastrointestinal tract (GI) (Goyer, 1991).

Off-site exposure is expected to be low under current or future conditions. Lead was detected in surface water in the wetland area. Surface water from the wetland ultimately discharges to Ley Creek; however, minimal sediment transport from the wetland to Ley Creek is expected. Wetlands function as natural filters for sediment/soil. The December 1994 lead concentration near the culvert at SS-6 (51.9 mg/kg) on the northern side of the landfill was about two orders of magnitude lower than that reported at SS-5 (5,110 mg/kg) near the SPDES outfall (Table 11) which indicates that lead concentrations observed in the December 1994 sampling event decreased rapidly with distance from the SPDES outfall. The lead results form the August 1995 sampling event, while not as dramatic as those from December 1994, show a similar trend of higher lead concentrations observed near the SPDES outfall (4000 mg/kg at SED-6, and 6010 mg/kg at SED-6A) than those observed on the opposite side of the wetlands (2020 mg/kg at SED-2A) and near the culvert (3380 mg/kg at SED-1).

The wetland area and Ley Creek is not expected to be routinely used for recreation or fishing. Although Ley Creek is a Class B stream, the Fish and Wildlife Habitat Impact

Analysis Report (Terrestrial Environmental Specialists, 1995) indicated that this area is of limited value as a habitat to fish and wildlife and did not support a substantial fish population to the highly industrialized/suburbanized nature of the Ley Creek watershed and the limited access to the area by the general public. Nevertheless, individuals fishing, wading, or swimming in Ley Creek, or the wetland area, could be exposed to lead. Therefore, a quantitative assessment of lead exposure is provided in the risk characterization section using USEPA's Integrated Exposure Uptake Biokinetic (IEUBK) model version 0.99d for lead (USEPA, 1994).

This model was designed to predict blood lead levels in young children following exposure to lead. USEPA has not developed an IEUBK model for adults. Although the IEUBK model is typically used to address lead in surface soil, it also may be used to evaluate other potential sources of exposure including: air, household dust, water, diet, and paint. It is not expected that children will routinely be exposed to surface-water at the site. The IEUBK model was used to provide a conservative estimate of potential risks.

The presumptive remedy for the site is capping the western portion of the site. The site is no longer used for the disposal of solid wastes, significantly reducing the amount of lead and other solids released to the environment. Capping will eliminate potential exposure pathways.

7.4 TOXICITY REVIEW

Inorganic lead is absorbed from the lungs and GI tract but very little is absorbed through the skin. GI absorption of lead varies according to the form of lead, age, and nutritional status. In young children, GI absorption may be as high as 40 to 50 percent with 30 percent retention. In adults, only 5 to 15 percent is absorbed and only about 5 percent is retained (Goyer, 1991).

Once absorbed, lead distributes to bone, soft tissues (primarily kidney, brain, and lung), and blood. More than 90 percent of the total body burden of lead is stored in bone with a half-life of more than 25 years. Lead in soft tissues has a half-life of about 40 days and generally does not accumulate with age. Almost all blood lead (PbB) is associated with the red blood cells with a half life of about 36 days (ATSDR, 1991).

Lead exposure has been associated with numerous toxic effects on various organs/systems including the nervous system, kidneys, blood, reproduction and development, and GI tract. Infants and young children are more susceptible to lead exposure than adults. Exposure is typically monitored by measuring PbB. Ten ug of lead per deciliter (ug/dL) of blood is the current benchmark level recommended by the USEPA and the Centers for Disease Control (CDC) for determining excess lead exposure in children.

7.5 RISK CHARACTERIZATION

Current and future exposures to on-site workers and off-site residents are not expected to pose an unacceptable risk based on the limited exposure potential and extent of release. Concentrations of VOCs detected in groundwater, soil, surface water, and sediment were below NYS standards and guidance values. Although several metals (total concentrations) exceeded groundwater standards, dissolved concentrations (with the exception of Monitor Well MW-4I) were below the standards. Metal concentrations in subsurface soil were generally within typical background ranges.

A direct comparison of total metal concentrations detected in surface water with surface water standards is not appropriate because the standards for most metals are based on the acid soluble form; however, based on total concentrations, lead and zinc are a potential concern.

To assess potential impacts of lead released to surface-water, the IEUBK model was used. As mentioned previously, this model was designed to predict PbB levels in young

children aged 6 months to 6 years. Exposure pathways identified for surface water and sediment included recreational use (fishing and swimming) of Ley Creek and possibly the wetland area. Young children would not reasonably be expected to swim in the creek or the wetland; however, they may ingest fish caught from this area. As a conservative measure, it was assumed that 5 to 10 percent of the total meat and fish diet of young children living near the site was from fish caught from Ley Creek. Furthermore, it was assumed that the average lead concentration in Ley Creek would be equal to the average lead concentration detected in wetland surface-water samples (samples SW-5, SW-6, and SW-12). This is a conservative assumption because lead concentrations in Ley Creek are expected to be lower than those detected in the wetlands due to sorption, attenuation, and dilution. The fish tissue concentration of lead (1.4 mg/kg) was calculated by multiplying the average surface water concentration (0.034 mg/L) by the bioconcentration factor of 42 L/kg (ATSDR 1991).

The IEUBK model was run using default exposure assumptions for exposure to lead in air, soil and dust, and water. Default concentrations are as follows: 0.1 micrograms per cubic meter ($\mu g/m^3$) for air, 200 mg/kg for soil, 150 mg/kg for household dust, and .004 mg/L for water. The dietary intake of lead was modified by including exposure from fish ingestion as 5 percent and 10 percent of the total meat diet.

The predicted geometric PbB levels in a population of young children were 4.7 ug/dL and 5.5 ug/dL based on a 5 percent and 10 percent diet fraction of fish caught from Ley Creek. At the five percent diet fraction, 95 percent of the exposed population would be expected to have a PbB concentration less than 10 ug/dL. Even at the 10 percent diet fraction level, 90 percent of the exposed population would have a predicted PbB less than 10 ug/dL. The output from the lead model is provided in Appendix H. This assessment indicates that even in the unlikely event that fish caught from Ley Creek and the wetland area near the site were an important local food source, risk from lead exposure would be below the USEPA and the CDC benchmark level.

8.0 SUMMARY AND CONCLUSIONS

Geraghty & Miller, Inc. conducted a focused RI at the Syracuse China site during the period November 1994 through October 1995. The purpose of the RI was to characterize the nature and extent of impacts at the site and to determine potential contaminant migration pathways, and to provide a basis for the completion of a focused FS.

The results of the RI have demonstrated the following:

- The geology at the site is comprised of glaciolacustrine deposits (silt, sand, clay, and gravel). A dense reddish brown till occurs between the glaciolacustrine deposits and the underlying bedrock.

- Groundwater flow in the first water-bearing unit (sandy silt) is north towards Ley Creek.

- Fill material on the western portion of the site consists of china scrap, gypsum molds, refractory materials, cinders, wood, and some fiberglass insulation. Fill material in this area ranges in thickness from 16 to 28 feet.

- Flammable concentration of gases were not detected during drilling operations conducted in fill materials at the site. However, an explosive gas survey will be conducted per Part 360 requirements as part of the Remedial Design, for the capping of the landfill.

- Sludge materials were encountered at several locations on the site. Thicknesses ranged from 4-inches to 11 feet.

- VOCs were not detected above quantitation limits in groundwater samples collected.

- Analytical results for metals in groundwater indicate that exceedences of the TOGS 1.1.1 standards were observed in both filtered and unfiltered metals samples. Analytical results reported for unfiltered samples were generally higher than results reported for the filtered samples, and more exceedences occurred from the unfiltered samples. The exceedenced noted for the unfiltered samples are due to the digestion of the suspended sediments in the unfiltered samples.

- VOCs were not detected above quantitation limits in soil samples with the exception of acetone, a common laboratory artifact.

- Metal concentrations detected in soil samples are within the range of eastern United States background concentrations with the exception of lead in one sample collected from boring SB-3. However, the lead concentration in this sample is within the typical range of lead concentrations in urban and suburban areas.

- VOCs were not detected above quantitation limits in surface-water samples.

- Lead was detected above NYSDEC surface-water standards in unfiltered metals samples SW-5 through SW-12. Zinc was detected above NYSDEC surface-water standards in unfiltered metals sample SW-8.

- VOCs were not detected above the quantitation limit for samples with the exception of acetone, a common laboratory artifact.

- PCBs were not detected above quantitation limits in samples collected from the landfill berms.

- Because of the detection of metals in the samples collected in the wetland

ED_006185_00000992-00048

area, particularly lead, above NYSDEC sediment guidance levels, NYSDEC has determined that remediation of the wetlands will be required. Additionally, the RI and historic sampling results indicate that the ponds will also require remediation. It is expected that sampling will be conducted during the initial FS stage to better define the areal extent to which the wetlands will require remediation.

- The Report on the Exploratory Test Pits is complete and final. Results from the test pit excavations can be found in the Test Pit Report dated July, 1995.

- The results of the risk assessment indicate that overall, the exposure potential at the site appears limited to lead in sediments. Under current conditions, this exposure is limited to workers entering the site to conduct SPDES sampling. Exposures reasonably expected to occur under these conditions do not appear to pose an unacceptable risk.

- The results of the fish and wildlife habitat impact analysis report indicate that the site and its vicinity are of limited value as habitat to fish and wildlife due to the highly industrialized/urbanized nature of the area.

9.0 REFERENCES

Agency for Toxic Substances and Disease Registry, 1991. Draft Toxicological Profile for Lead. Prepared by Clement International Corporation for U.S. Department of Health and Human Services.

Bouwer, H. and R.C. Rice, 1976. A Slug Test Method for Determining Hydraulic Conductivity of Unconfined Aquifers with Completely or Partially Penetrating Wells. Water Resources Research, Vol. 12, No. 3, pp. 423-428.

C & H Engineers, Inc. 1992. Letter to P.E. Harvard, Syracuse China Corporation, May 14, 1992.

Fischer, D.W. and L.V. Richard. 1970. Geologic Map of New York State, Finger Lakes Sheet. New York State Museum and Science Service Map and Chart. Series No. 15.

Freeze, R.A. and J.A. Cherry, 1979. Groundwater. Prentice-Hall, Inc., Englewood Cliffs, New Jersey, 604 pp.

Geraghty & Miller, Inc. 1994a. Remedial Investigation and Feasibility Study Work Plan, Syracuse China Landfill, Syracuse China Manufacturing Company, Syracuse, New York. November 1994.

Geraghty & Miller, Inc. 1994b. Field Sampling Plan Remedial Investigation/Feasibility Study Work Plan, Syracuse China Landfill, Syracuse, New York. November 1994.

Geraghty & Miller, Inc. 1994c. Quality Assurance Project Plan Remedial Investigation/Feasibility Study Work Plan, Syracuse China Landfill, Syracuse, New York. Revision 1. November 1994.

Geraghty & Miller, Inc. 1995a. Report on the Geophysical Survey, Syracuse China Landfill, Syracuse, New York. January 1995.

Geraghty & Miller, Inc. 1995b. Exploratory Test Pit Work Plan, Syracuse China Landfill, Syracuse Manufacturing Company, Syracuse, New York. March 1995.

Gerstman, Marc S. 1994. Letter to Thomas F. Walsh, Esq. dated September 6, 1994.

Goyer, R.A., 1991. Toxic Effects of Metals. In: Casarett and Doull's Toxicology, the Basic Science of Poisons, 4th Edition. M.O. Amdur, J. Doull, and C.D. Klaassen, eds. Pergamon Press, pp. 623-680.

Kabata-Pendias, A. and H. Pendias, 1992. Trace Elements in Soils and Plants, 2nd Edition. CRC Press, Boca Raton, Florida, 365 pp.

Kantrowitz, I.H. 1970. Ground Water Resources in the Eastern Oswego River Basin, New York. State of New York Conservation Department Water Resources Commission, Basic Planning Report ORB-2.

New York State Department of Environmental Conservation (NYSDEC), 1991. Water Quality Regulations Surface Water and Groundwater Classifications and Standards. New York State Codes, Rules, and Regulations, Title 6, Chapter X, Parts 700-705.

NYSDEC, 1993a. Ambient Water Quality Standards and Guidance Values

NYSDEC, 1993b. Technical Guidance for Screening Contaminated Sediments, Department of Environmental Conservation.

NYSDEC, 1994. Determination of Soil Cleanup Objectives and Cleanup Levels. Technical and Administrative Guidance Memorandum HWR-94-4046, January 24, 1994.

O'Brien & Gere Engineers, Inc. 1991. Solid Waste Management Plan. Syracuse China Corporation, Syracuse, New York.

O'Brien & Gere Engineers, Inc. 1990. Preliminary Hydrogeologic Assessment. Syracuse China Corporation, Syracuse, New York, April 1990.

Syracuse China Corporation. 1992. Letter to Leland Flocke, New York State Department of Environmental Conservation, May 14, 1992.

Terrestrial Environmental Specialists, Inc., 1995. Fish and Wildlife Habitat Impact Analysis of the Syracuse China Landfill Site, Syracuse New York.

Todd, D.K. (compiler), 1983. Ground Water Resources of the United States, Premier Press, Berkeley, California.

United States Geological Survey (USGS), 1984. Element Concentrations in Soils and Other Surficial Materials of the Conterminous United States. USGS Professional Paper 1270. United States Government Printing Office, Washington, D.C.

United States Environmental Protection Agency (USEPA), 1979. Water Related Environmental Fate of 129 Priority Pollutants. Office of Water Planning and Standards, Washington, D.C., USEPA 440/4-79-029.

United States Environmental Protection Agency (USEPA), 1990. Streamlining the RI/FS for CERCLA Municipal Landfill Sites. Office of Solid Waste and Emergency Response, Washington, D.C. Directive: 9355.3-11FS.

United States Environmental Protection Agency (USEPA), 1994. Guidance Manual for the Integrated Exposure Update Biokinetic Model for Lead in Children. Publication Number 9285.7-15-1. EPA/540/R-93/081. Office of Solid Waste and Engineering Response, Washington, D.C.

Table 1. Groundwater Elevation Data Collected January 5, 1995, Syracuse China Site, Syracuse, New York.

Monitoring Well	Measuring Point Elevation	Depth to Water**	Groundwater Elevation*
MW-1	413.78	19.29	394.49
MW-2	394.84	4.46	390.38
MW-3	387.83	3.69	384.14
MW-4	385.59	5.15	380.44
MW-4I	385.40	5.33	380.07
MW-5	390.40	4.15	386.25
MW-6	410.70	4.67	410.03
MW-7	394.67	7.51	387.16

* Elevations in feet above mean sea level.
** Feet below measuring point.

Table 2. Summary of Volatile Organic Compounds Detected in Groundwater Samples Collected January 5, 1995, Syracuse China Site, Syracuse, New York.

Parameter	Quantitation Limit	Sample ID:	MW-1	MW-2	MW-3	(Dup) MW-3	MW-4
Chloromethane	10		--	--	--	--	--
Bromomethane	10		--	--	--	--	--
Vinyl chloride	10		--	--	--	--	--
Chloroethane	10		-- J	-- J	-- J	-- J	-- J
Methylene chloride	10		--	--	--	--	--
Acetone	10		--	--	--	--	--
Carbon disulfide	10		--	--	--	--	--
1,1-Dichloroethene	10		--	--	--	--	--
1,1-Dichloroethane	10		--	--	--	--	--
1,2-Dichloroethene (total)	10		--	--	--	--	--
Chloroform	10		--	--	--	--	--
1,2-Dichloroethane	10		--	--	--	--	--
2-Butanone	10		--	--	--	--	--
1,1,1-Trichloroethane	10		--	--	--	--	--
Carbon tetrachloride	10		--	--	--	--	--
Bromodichloromethane	10		--	--	--	--	--
1,2-Dichloropropane	10		--	--	--	--	--
cis-1,3-Dichloropropene	10		--	--	--	--	--
Trichloroethene	10		--	--	--	--	--
Dibromochloromethane	10		--	--	--	--	--
1,1,2-Trichloroethane	10		--	--	--	--	--
Benzene	10		--	--	--	--	--
trans-1,3-Dichloropropene	10		--	--	--	--	--
Bromoform	10		--	--	--	--	--
4-Methyl-2-pentanone	10		--	--	--	--	--
2-Hexanone	10		--	--	--	--	--
Tetrachloroethene	10		--	--	--	--	--
1,1,2,2-Tetrachloroethane	10		--	--	--	--	--
Toluene	10		--	--	--	--	--
Chlorobenzene	10		--	--	--	--	--
Ethylbenzene	10		--	--	--	--	--
Styrene	10		--	--	--	--	--
Xylene (total)	10		--	--	0.7 J	--	--

Concentrations reported in micrograms per liter (ug/L).
-- Analyte not detected.
J Estimated value.

Table 2. Summary of Volatile Organic Compounds Detected in Groundwater Samples Collected January 5, 1995, Syracuse China Site, Syracuse, New York.

Parameter	Quantitation Limit	Sample ID: MW-4I	MW-5	MW-6	MW-7	FB010595	TB010595
Chloromethane	10	--	--	--	--	--	--
Bromomethane	10	--	--	--	--	--	--
Vinyl chloride	10	--	--	--	--	--	--
Chloroethane	10	-- J	-- J	-- J	-- J	-- J	-- J
Methylene chloride	10	--	--	--	--	--	--
Acetone	10	--	--	--	--	--	--
Carbon disulfide	10	--	--	--	--	--	--
1,1-Dichloroethene	10	--	--	--	--	--	--
1,1-Dichloroethane	10	--	--	--	--	--	--
1,2-Dichloroethene (total)	10	--	--	--	--	--	--
Chloroform	10	--	--	--	--	1 J	--
1,2-Dichloroethane	10	--	--	--	--	--	--
2-Butanone	10	--	--	--	--	--	--
1,1,1-Trichloroethane	10	--	--	--	--	--	--
Carbon tetrachloride	10	--	--	--	--	--	--
Bromodichloromethane	10	--	--	--	--	--	--
1,2-Dichloropropane	10	--	--	--	--	--	--
cis-1,3-Dichloropropene	10	--	--	--	--	--	--
Trichloroethene	10	--	--	--	--	--	--
Dibromochloromethane	10	--	--	--	--	--	--
1,1,2-Trichloroethane	10	--	--	--	--	--	--
Benzene	10	--	--	--	--	--	--
trans-1,3-Dichloropropene	10	--	--	--	--	--	--
Bromoform	10	--	--	--	--	--	--
4-Methyl-2-pentanone	10	--	--	--	--	--	--
2-Hexanone	10	--	--	--	--	--	--
Tetrachloroethene	10	--	--	--	--	--	--
1,1,2,2-Tetrachloroethane	10	--	--	--	--	--	--
Toluene	10	--	--	--	--	--	--
Chlorobenzene	10	--	--	--	--	--	--
Ethylbenzene	10	--	--	--	0.5 J	--	--
Styrene	10	--	--	--	--	--	--
Xylene (total)	10	--	--	1 J	9 J	--	--

Concentrations reported in micrograms per liter (ug/L).

-- Analyte not detected.

J Estimated value.

Table 3. Summary of Inorganic Parameters Detected in Groundwater Samples Collected January 5, 1995, Syracuse China Site, Syracuse, New York.

	MW-1		MW-2		MW-3		MW-3 (Duplicate)		MW-4	
Parameter / Sample ID:	Dissolved	Total	Dissolved	Total	Dissolved	Total	Dissolved	Total	Dissolved	Total
Aluminum	0.012 U	13.7 J	0.032 BU	15.5 J	0.017 BU	41.5J	0.017 U	51.4 J	0.035 U	55.8 J
Antimony	0.038 U	0.038 U	0.038 U	0.038 U	0.038 U	0.038 U	0.038 U	0.048 B	0.038 U	0.038 U
Arsenic	0.001 U	0.005 B	0.001 U	0.007 BJ	0.002 B	0.049	0.002 B	0.062	0.001 U	0.027
Barium	0.034 B	0.147 B	0.021 B	0.097 B	0.03B	0.33	0.031 B	0.389	0.018 B	0.512
Beryllium	0.001 U	0.001 U	0.001 U	0.001 U	0.001 U	0.001 U	0.001 U	0.001 U	0.001 U	0.001 U
Cadmium	0.002 U	0.002 U	0.002 U	0.002 U	0.002 U	0.002 U	0.002 U	0.002 B	0.002 U	0.005 B
Calcium	123	198	460	500	172	658	178	630	403	610
Chromium	0.002 U	0.016	0.002 U	0.015	0.002 U	0.05	0.002 U	0.059	0.002 U	0.062
Cobalt	0.003 U	0.012 B	0.003 U	0.008 B	0.003 U	0.039 B	0.003 U	0.043 B	0.003 U	0.048 B
Copper	0.006 BJ	0.053	0.007 BJ	0.042	0.003 BJ	0.086	0.002 U	0.097	0.002 U	0.135
Iron	0.015 U	20.7	0.018 U	20.9 J	1.12	70.2 J	1.16	81.4	0.032 U	95.8 J
Lead	0.023	0.016	0.001 U	0.011 U	0.002 U	0.176	0.003 U	0.254	0.003 U	0.051 J
Magnesium	33.4	74.6	51.4	82.2	44.3	206	45.7	199	23.7	99.4
Manganese	0.003 U	0.77	0.65	2.28	0.549	3.46	0.567	3.39	1.59	38.2
Mercury	0.0002 U	0.0002 U	0.0002 U	0.0002 U	0.0002 U	0.0002 U	0.0002 U	0.0002 U	0.0002 U	0.0002 U
Nickel	0.008 U	0.024 B	0.008 U	0.021 B	0.008 U	0.075	0.008 U	0.083	0.008 U	0.106
Potassium	0.517 U	4.81 B	0.517 U	5.9	0.517 U	7.98	0.517 U	8.9	2.92 B	9.37
Selenium	0.002 B	0.002 B	0.001 U	0.002 UJ	0.001 U	0.001 UJ	0.001 U	0.001 UJ	0.001 U	0.002 UJ
Silver	0.003 U	0.003 U	0.003 U	0.003 U	0.003 U	0.003 U	0.003 U	0.003 U	0.003 U	0.003 U
Sodium	21.2	22.3	41	1,020	29.3	32.6	30.4	32.8	36	38.9
Thallium	0.001 U	0.001 UJ	0.001 UJ	0.001 UJ	0.001 UJ	0.001 BJ	0.001 UJ	0.001 UJ	0.001 UJ	0.001 UJ
Vanadium	0.006 U	0.01 B	0.006 U	0.24 B	0.006 U	0.074	0.006 U	0.075	0.006 U	0.088
Zinc	0.048 U	0.07 U	0.03 U	0.067 U	0.039 U	0.198	0.04 U	0.218	0.052	0.292
Cyanide	NR	0.01 U	NR	0.01 U	NR	0.01 U	NR	0.01 U	NR	0.01 U

Concentrations reported in milligrams per liter (mg/L).
U Analyte analyzed for but not detected.
B Analyte result between instrument detection limit (IDL) and contract required detection limit (CRDL).
J Estimated value.
R Unusable result.
NR Not required.

ED_006185_00000992-00056

Table 3. Summary of Inorganic Parameters Detected in Groundwater Samples Collected January 5, 1995, Syracuse China Site, Syracuse, New York.

	MW-4I		MW-5		MW-6		MW-7		FB010595	
Parameter Sample ID:	Dissolved	Total	Dissolved	Total	Dissolved	Total	Dissolved	Total	Dissolved	Total
Aluminum	62.1	51.8 J	0.360	6.76 J	6.27	95.9 J	0.012 U	9.58 J	0.58 B	0.049 B
Antimony	0.059 B	0.038 U	0.038 U	0.038 U	0.038 U	0.052 B	0.038 U	0.038 U	0.038 U	0.038 U
Arsenic	0.037	0.027 S	0.003 B	0.023	0.001 B	0.043	0.001 B	0.011	0.001 U	0.001 U
Barium	0.576 J	0.470 J	0.039 B	0.079 B	0.109 B	0.765	0.026 B	0.09 B	0.008 U	0.008 U
Beryllium	0.001 U	0.001 U	0.001 U	0.001 U	0.001 U	0.001 U	0.001 U	0.001 U	0.001 U	0.001 U
Cadmium	0.004 B	0.002 U	0.004 B	0.003 B	0.002 U	0.003 B	0.002 U	0.002 U	0.002 U	0.002 U
Calcium	741	720	86.8	125	107	587	231	303	0.856 B	0.709 B
Chromium	0.144 J	0.096 J	0.002 U	0.012	0.005 B	0.132	0.002 U	0.016	0.002 U	0.002 U
Cobalt	0.054	0.042 B	0.003 U	0.005 B	0.007 B	0.092	0.005 B	0.011 B	0.003 U	0.003 U
Copper	0.197 J	0.155 J	0.008 BJ	0.009 BJ	0.035	0.356	0.002 U	0.02 BJ	0.002 U	0.002 U
Iron	106 J	85.2 J	0.716	9.89 J	0.008 U	139 J	2.34	17.2 J	0.128 J	0.114 J
Lead	R	R	0.003 U	0.007 U	0.007 U	0.066	0.004 U	0.216	0.001 U	0.001 U
Magnesium	165	157	28.9	45.8	29.2	221	14.3	37.2	0.163 B	0.014 B
Manganese	4.38 J	3.92 J	0.021 U	0.215	0.464	4.21	1.97	2.53	0.007 B	0.014 B
Mercury	0.0002 B	0.0002 U	0.0002 U	0.0002 U	0.0002 U	0.0002 U	0.0002 U	0.0002 U	0.0002 U	0.0002 U
Nickel	0.132 J	0.108 J	0.008 U	0.008 U	0.015 B	0.193	0.008 U	0.016 B	0.008 U	0.008 U
Potassium	28.5	28	8.7	10.6	4.06 B	25.6	4.08 B	6.53	0.517 U	0.517 U
Selenium	0.002 BJ	0.003 UJ	0.001 U	0.001 U	0.001 U	0.005 U	0.001 U	0.001 U	0.001 U	0.001 U
Silver	0.003 U	0.003 U	0.003 U	0.003 U	0.003 U	0.003 U	0.003 U	0.003 U	0.003 U	0.003 U
Sodium	25.9	25.5	69.5	71.6	12.1	14	32.9	33.6	0.052 B	0.153 B
Thallium	0.001 UJ	0.001 UJ	0.001 UJ	0.001 UJ	0.001 U	0.001 BJ	0.001 UJ	0.001 UJ	0.001 U	0.001 U
Vanadium	0.094 J	0.074 J	0.007 B	0.006 U	0.007 B	0.109	0.006 U	0.012 B	0.006 U	0.006 U
Zinc	0.377 J	0.294 J	R	R	0.114	0.461	0.037 U	0.052 U	0.009 B	0.017 B
Cyanide	NR	0.01 U	NR	0.01 U	NR	0.01 U	NR	0.01 U	NR	0.01 U

Concentrations reported in milligrams per liter (mg/L).
U Analyte analyzed for but not detected.
B Analyte result between instrument detection limit (IDL) and contract required detection limit (CRDL).
J Estimated value.
R Unusable result.
NR Not required.

ED_006185_00000992-00057

Table 4. Summary of the Dissolved Metals Concentrations in Groundwater Samples Collected on January 5, 1995, Exceeding the New York State Department of Environmental Conservation Division of Water Technical and Operational Guidance Series (TOGS 1.1.1) Ambient Water Quality Standards and Guidance Values, Syracuse China Site, Syracuse, New York.

	TOGS 1.1.1 Standard	MW-1 1/5/95	MW-2 1/5/95	MW-3 1/5/95	MW-4 1/5/95	MW-4I 1/5/95	MW-5 1/5/95	MW-6 1/5/95	MW-7 1/5/95
Iron	0.3	--	--	1.12	--	106 J	0.72	7.44	2.34
Magnesium	35*	--	51.4	44.3	--	165	--	--	--
Manganese	0.3	--	0.65	0.55	1.6	4.4 J	--	0.46	1.97
Sodium	20	21.2	41	29.3	36	25.9	69.5	--	32.9
Zinc	0.3	--	--	--	--	3.78 J	--	--	--

Concentrations reported in milligrams per liter (mg/L).

* Guidance Value.

-- Standard not exceeded.

J Estimated value.

ED_006185_00000992-00058

Table 5. Summary of Volatile Organic Compounds Detected in Soil Samples, Syracuse China Site, Syracuse, New York

Parameter	Method Detection Limit	Sample ID:	PMW-3I	MW-4I	MW-6	MW-7	SB-1	SB-2
		Sample Depth:	26-30 ft.	14-18 ft.	4-6 ft.	14-16 ft.	16-18 ft.	14-16 ft.
		Sample Date:	11/30/94	11/30 94	11/28/94	12/1/94	12/6/94	12/6/94
		Dilution Factor:	1.09	1.08	1.12	1.20	1.19	1.14
Chloromethane	10		--	--	--	--	-- J	-- J
Bromomethane	10		--	--	--	--	--	--
Vinyl chloride	10		--	--	--	--	--	--
Chloroethane	10		--	--	--	--	--	--
Methylene chloride	10		--	--	--	--	2 J	--
Acetone	10		-- J	38 J	39 J	150 J	36 UJ	24 UJ
Carbon disulfide	10		--	--	--	--	--	--
1,1-Dichloroethene	10		--	--	--	--	--	--
1,1-Dichloroethane	10		--	--	--	--	--	--
1,2-Dichloroethene (total)	10		--	--	--	--	--	--
Chloroform	10		--	--	--	--	--	--
1,2-Dichloroethane	10		--	--	--	--	--	--
2-Butanone	10		-- J	-- J	-- J	5 J	3 J	-- J
1,1,1-Trichloroethane	10		--	--	--	--	--	--
Carbon tetrachloride	10		--	--	--	--	--	--
Bromodichloromethane	10		--	--	--	--	--	--
1,2-Dichloropropane	10		--	--	--	--	--	--
cis-1,3-Dichloropropene	10		--	--	--	--	--	--
Trichloroethene	10		2 J	--	--	--	--	--
Dibromochloromethane	10		--	--	--	--	--	--
1,1,2-Trichloroethane	10		--	--	--	--	--	--
Benzene	10		--	--	--	--	--	--
trans-1,3-Dichloropropene	10		--	--	--	--	--	--
Bromoform	10		--	--	--	--	--	--
4-Methyl-2-pentanone	10		-- J	-- J	-- J	-- J	-- J	-- J
2-Hexanone	10		-- J	-- J	-- J	-- J	-- J	-- J
Tetrachloroethene	10		--	--	--	--	--	--
1,1,2,2-Tetrachloroethane	10		--	--	--	--	-- J	-- J
Toluene	10		21	3 J	2 J	4 J	12U	11U
Chlorobenzene	10		--	--	--	--	--	--
Ethylbenzene	10		--	--	--	--	--	--
Styrene	10		--	--	--	--	--	--
Xylene (total)	10		--	--	--	--	--	--

Concentrations reported in micrograms per kilogram (ug/kg).

-- Analyte not detected at or above the quantitation limit (method detection limit x dilution factor).

J Estimated value.

B Analyte also detected in associated blank.

U The compound was analyzed for but not detected at the specified detection limit, where the detection limit is raised above the contract required detection limit.

12-94TBL.XLSTbl 5

Table 5. Summary of Volatile Organic Compounds Detected in Soil Samples, Syracuse China Site, Syracuse, New York

Parameter	Method Detection Limit	Sample ID: / Sample Depth: / Sample Date: / Dilution Factor:	SB-3 22-24 ft. 12/6/94 1.43	SB-4 6-8 ft. 12/2/94 1.23	SB-5 2-4 ft. 12/2/94 1.28	Field Blank 11/28/94 1.00	Field Blank 11/30/94 1.00	Field Blank 12/1/94 1.00
Chloromethane	10		-- J	--	--	-- J	-- J	--
Bromomethane	10		--	--	--	--	--	--
Vinyl chloride	10		--	--	--	-- J	-- J	--
Chloroethane	10		--	--	--	--	--	--
Methylene chloride	10		2 J	--	--	--	--	--
Acetone	10		31 UJ	20 J	22 J	-- J	-- J	-- J
Carbon disulfide	10		--	--	--	--	--	--
1,1-Dichloroethene	10		--	--	--	--	--	--
1,1-Dichloroethane	10		--	--	--	--	--	--
1,2-Dichloroethene (total)	10		--	--	--	--	--	--
Chloroform	10		--	--	--	--	--	--
1,2-Dichloroethane	10		--	--	--	--	--	--
2-Butanone	10		-- J	-- J	-- J	-- J	-- J	--
1,1,1-Trichloroethane	10		--	--	--	--	--	--
Carbon tetrachloride	10		--	--	--	--	--	--
Bromodichloromethane	10		--	--	--	--	--	--
1,2-Dichloropropane	10		--	--	--	--	--	--
cis-1,3-Dichloropropene	10		--	--	--	--	--	--
Trichloroethene	10		--	--	--	--	--	--
Dibromochloromethane	10		--	--	--	--	--	--
1,1,2-Trichloroethane	10		--	--	--	--	--	--
Benzene	10		--	--	--	--	--	--
trans-1,3-Dichloropropene	10		--	--	--	--	--	--
Bromoform	10		--	--	--	--	--	--
4-Methyl-2-pentanone	10		-- J	-- J	-- J	-- J	-- J	--
2-Hexanone	10		-- J	-- J	-- J	-- J	-- J	--
Tetrachloroethene	10		--	--	--	--	--	--
1,1,2,2-Tetrachloroethane	10		-- J	--	--	--	--	--
Toluene	10		14U	3 J	2 J	--	--	--
Chlorobenzene	10		--	--	--	--	--	--
Ethylbenzene	10		--	--	--	--	--	--
Styrene	10		--	--	--	--	--	--
Xylene (total)	10		--	--	--	--	--	--

Concentrations reported in micrograms per kilogram (ug/kg).

-- Analyte not detected at or above the quantitation limit (method detection limit x dilution factor).

J Estimated value.

B Analyte also detected in associated blank.

U The compound was analyzed for but not detected at the specified detection limit, where the detection limit is raised above the contract required detection limit.

Table 5. Summary of Volatile Organic Compounds Detected in Soil Samples, Syracuse China Site, Syracuse, New York.

Parameter	Method Detection Limit	Sample ID: Sample Date: Dilution Factor:	Field Blank 12/2/94 1.00	Field Blank 12/6/94 1.00	Trip Blank 11/30/94 1.00	Trip Blank 12/1/94 1.00	Trip Blank 12/2/94 1.00	Trip Blank 12/6/94 1.00
Chloromethane	10		--	--	--	--	-- J	--
Bromomethane	10		--	--	--	--	--	--
Vinyl chloride	10		--	--	--	--	--	--
Chloroethane	10		--	--	--	--	--	--
Methylene chloride	10		--	--	--	--	--	--
Acetone	10		-- J	--	-- J	-- J	-- J	-- J
Carbon disulfide	10		--	--	--	--	--	--
1,1-Dichloroethene	10		--	--	--	--	--	--
1,1-Dichloroethane	10		--	--	--	--	--	--
1,2-Dichloroethene (total)	10		--	--	--	--	--	--
Chloroform	10		--	--	--	--	--	--
1,2-Dichloroethane	10		--	--	--	--	--	--
2-Butanone	10		--	--	--	--	--	--
1,1,1-Trichloroethane	10		--	--	--	--	--	--
Carbon tetrachloride	10		--	--	--	--	--	--
Bromodichloromethane	10		--	--	--	--	--	--
1,2-Dichloropropane	10		--	--	--	--	--	--
cis-1,3-Dichloropropene	10		--	--	--	--	--	--
Trichloroethene	10		--	--	--	--	--	--
Dibromochloromethane	10		--	--	--	--	--	--
1,1,2-Trichloroethane	10		--	--	--	--	--	--
Benzene	10		--	--	--	--	--	--
trans-1,3-Dichloropropen	10		--	--	--	--	--	--
Bromoform	10		--	--	--	--	--	--
4-Methyl-2-pentanone	10		--	--	--	--	-- J	--
2-Hexanone	10		--	--	--	--	--	--
Tetrachloroethene	10		--	--	--	--	--	--
1,1,2,2-Tetrachloroethane	10		--	--	--	--	--	--
Toluene	10		--	2 J	--	--	--	--
Chlorobenzene	10		--	--	--	--	--	--
Ethylbenzene	10		--	--	--	--	--	--
Styrene	10		--	--	--	--	--	--
Xylene (total)	10		--	--	--	--	--	--

Concentrations reported in micrograms per kilogram (ug/kg).

-- Analyte not detected at or above the quantitation limit (method detection limit x dilution factor).

J Estimated value.

B Analyte also detected in associated blank.

U The compound was analyzed for but not detected at the specified detection limit, where the detection limit is raised above the contract required detection limit.

Table 6. Summary of Inorganic Parameters Detected in Soil Samples, Syracuse China Site, Syracuse, New York.

Parameter	Sample ID:	PMW-3I	MW-4I	MW-6	MW-7	SB-1	SB-2	SB-3	SB-4	SB-5
	Sample Depth:	26-30 ft.	14-18 ft.	4-10 ft.	14-16 ft.	16-18 ft.	14-16 ft.	4-6; 22-24 ft.	6-8 ft.	2-8 ft.
	Sample Date:	11/30/94	11/30/94	11/28/94	12/1/94	12/6/94	12/6/94	12/6/94	12/2/94	12/2/94
Aluminum		6,630	3,940	4,600	2,270	7,320	5,600	6,690	3,920	5,360
Antimony		8.2 UJ	8.2 UJ	8.4 UJ	8.9 UJ	9.1 UJ	8.6 UJ	9.4 UJ	9.5 UJ	9.5 UJ
Arsenic		2.0 B	2.7	3.6	1.6 B	5.9	3.3	1.0 BJ	4.4	2.4 B
Barium		33.3 B	29.3 B	37.7 B	6.4 B	57.2	32.8 B	19.7 B	38.2 B	22.8 B
Beryllium		0.27 B	0.21 U	0.26 B	0.23 U	0.29 B	0.26 B	0.25 U	0.25 U	0.25 U
Cadmium		0.43 U	0.43 U	0.44 U	0.47 U	0.48 U	0.45 U	0.50 U	0.50 U	0.50 U
Calcium		41,700 J	52,300 J	50,800 J	48,300 J	42,200 J	52,000 J	55,600 J	37,800 J	27,300 J
Chromium		10.1 J	5.2 J	11.1 J	4.7 J	10.5 J	6.2 J	3.3 J	6.2 J	6.6 J
Cobalt		4.6 B	3.9 B	5.9 B	3.7 B	7.2 B	5.4 B	2.9 B	3.3 B	4.4 B
Copper		8.4 U	7.7 U	15.4	16.9	16.4	16.4	7.9 U	10.2 U	10.6 U
Iron		12,100	8,740	11,700	6,350	16,800	10,500	3,410	8,340	9,150
Lead		2.3 J	3.5 J	3.2 J	4.4 J	6.8 J	11.6 J	426	3.8 J	29.9 J
Magnesium		17,200 J	14,000 J	13,600 J	16,700 J	14,800 J	21,500 J	4,910 J	15,100 J	9,250 J
Manganese		332 J	307 J	458 J	244 J	422 J	362 J	106 J	296 J	257 J
Mercury		0.11 U	0.10 U	0.10 U	0.094 U	0.11 U	0.094 U	0.12 U	0.12 U	0.11 U
Nickel		13.8	7.0 B	11.6	8.2 B	16.2	10.6	4.7 B	5.6 B	10 B
Potassium		986 B	813 B	589 B	311 B	846 B	681 B	868 B	402 B	630 B
Selenium		0.22 U	0.21 U	0.22 U	0.23 U	1.2 U	0.23 U	0.25 U	0.25 U	0.25 U
Silver		0.64 U	0.64 U	0.67 U	0.70 U	0.72 U	0.68 U	0.74 U	0.75 U	0.75 U
Sodium		80.1 B	73.0 B	76.8 B	75.3 B	117 B	114 B	1,140 B	102 B	161 B
Thallium		0.22 U	0.21 U	0.38 B	0.23 U	0.24 U	0.23 U	0.25 U	0.25 U	0.25 U
Vanadium		9.5 B	6.9 B	7.1 B	5.0 B	15.2	11.2 B	7.0 B	8.6 B	14.3
Zinc		22.7	28.4	24.0	14.7	30.3	25.6	36.7	20.0	22.6
Cyanide		0.54 UJ	0.51 UJ	0.53 UJ	0.57 UJ	0.58 UJ	0.55 UJ	0.62 UJ	0.60 UJ	0.60 UJ

Concentrations reported in milligrams per kilogram (mg/kg).
U Analyte analyzed for but not detected.
B Analyte result between instrument detection limit (IDL) and contract required detection limit (CRDL).
J Estimated value.

ED_006185_00000992-00062

Table 7. Summary of Semivolatile Organic Compounds Detected in Soil Samples Collected December 6, 1994, Syracuse China Site, Syracuse, New York.

Parameter	Quantitation Limit	Sample ID: Sample Depth: Dilution Factor:	SB-3 22-24 ft. 1.00
Phenol	470		--
bis(2-Chloroethyl)ether	470		--
2-Chlorophenol	470		--
1,3-Dichlorobenzene	470		--
1,4-Dichlorobenzene	470		--
1,2-Dichlorobenzene	470		--
2-Methylphenol	470		--
2,2'-oxybis(1-Chloropropane)	470		--
4-Methylphenol	470		--
N-Nitroso-di-n-propylamine	470		--
Hexachloroethane	470		--
Nitrobenzene	470		--
Isophorone	470		--
2-Nitrophenol	470		--
2,4-Dimethylphenol	470		--
bis(2-Chloroethoxy)methane	470		--
2,4-Dichlorophenol	470		--
1,2,4-Trichlorobenzene	470		--
Naphthalene	470		--
4-Chloroaniline	470		--
Hexachlorobutadiene	470		--
4-Chloro-3-methylphenol	470		--
2-Methylnaphthalene	470		--
Hexachlorocyclopentadiene	470		-- J
2,4,6-Trichlorophenol	470		--
2,4,5-Trichlorophenol	1,100		--
2-Chloronaphthalene	470		--
2-Nitroaniline	1,100		--
Dimethylphthalate	470		--
Acenaphthylene	470		--
2,6-Dinitrotoluene	470		--
3-Nitroaniline	1,100		-- J

Concentrations reported in micrograms per kilogram (ug/kg).

-- Analyte not detected at or above the quantitation limit.

J Estimated value.

12-94TBL.XLSTbl 7

Table 7. Summary of Semivolatile Organic Compounds Detected in Soil Samples Collected December 6, 1994, Syracuse China Site, Syracuse, New York.

Parameter	Quantitation Limit	Sample ID: Sample Depth: Dilution Factor:	SB-3 22-24 ft. 1.00
Acenaphthene	470		--
2,4-Dinitrophenol	1,100		--
4-Nitrophenol	1,100		--
Dibenzofuran	470		--
2,4-Ditnitrotoluene	470		--
Diethylphthalate	470		--
4-Chlorophenyl-phenylether	470		--
Fluorene	470		--
4-Nitroaniline	1,100		-- J
4,6-Dinitro-2-methylphenol	1,100		--
N-Nitrosodiphenylamine	470		--
4-Bromophenyl-phenylether	470		--
Hexachlorobenzene	470		--
Pentachlorophenol	1,100		--
Phenanthrene	470		--
Anthracene	470		--
Carbazole	470		-- J
Di-n-butylphthalate	470		--
Fluoranthene	470		11 J
Pyrene	470		11 J
Butylbenzylphthalate	470		--
3,3'-Dichlorobenzidine	470		--
Benzo(a)anthracene	470		--
Chrysene	470		--
bis(2-Ethylhexyl)phthalate	470		--
Di-n-octylphthalate	470		--
Benzo(b)fluoranthene	470		--
Benzo(k)fluoranthene	470		--
Benzo(a)pyrene	470		--
Indeno(1,2,3-cd)pyrene	470		--
Dibenz(a,h)anthracene	470		--
Benzo(g,h,i)perylene	470		--

Concentrations reported in micrograms per kilogram (ug/kg).

-- Analyte not detected at or above the quantitation limit.

J Estimated value.

Table 8. Summary of Volatile Organic Compounds Detected in Surface-Water Samples Collected December 7, 1994, Syracuse China Site, Syracuse, New York.

Parameter	Quantitation Limit	Sample ID:	SW-5	SW-6	SW-7	SW-8	(Dup) SW-8
Chloromethane	10		--	--	--	--	--
Bromomethane	10		--	--	--	--	--
Vinyl chloride	10		--	--	--	--	--
Chloroethane	10		--	--	--	--	--
Methylene chloride	10		--	--	--	--	--
Acetone	10		--	--	--	--	--
Carbon disulfide	10		--	--	--	--	--
1,1-Dichloroethene	10		--	--	--	--	--
1,1-Dichloroethane	10		--	--	--	--	--
1,2-Dichloroethene (total)	10		--	--	--	--	--
Chloroform	10		8 J	--	--	8 J	9 J
1,2-Dichloroethane	10		--	--	--	--	--
2-Butanone	10		--	--	--	--	--
1,1,1-Trichloroethane	10		--	--	--	--	--
Carbon tetrachloride	10		--	--	--	--	--
Bromodichloromethane	10		--	--	--	2 J	2 J
1,2-Dichloropropane	10		--	--	--	--	--
cis-1,3-Dichloropropene	10		--	--	--	--	--
Trichloroethene	10		--	--	--	--	--
Dibromochloromethane	10		--	--	--	--	--
1,1,2-Trichloroethane	10		--	--	--	--	--
Benzene	10		--	--	--	--	--
trans-1,3-Dichloropropene	10		--	--	--	--	--
Bromoform	10		--	--	--	--	--
4-Methyl-2-pentanone	10		--	--	--	--	--
2-Hexanone	10		--	--	--	--	--
Tetrachloroethene	10		--	--	--	--	--
1,1,2,2-Tetrachloroethane	10		--	--	--	--	--
Toluene	10		--	--	--	--	--
Chlorobenzene	10		--	--	--	--	--
Ethylbenzene	10		--	--	--	--	--
Styrene	10		--	--	--	--	--
Xylene (total)	10		--	--	--	--	--

Concentrations reported in micrograms per liter (ug/L).
-- Analyte not detected.
J Estimated value.

Table 8. Summary of Volatile Organic Compounds Detected in Surface-Water Samples Collected December 7, 1994, Syracuse China Site, Syracuse, New York.

Parameter	Quantitation Limit	Sample ID:	SW-9	SW-10	SW-12	Field Blank	Trip Blank
Chloromethane	10		--	--	--	--	--
Bromomethane	10		--	--	--	--	--
Vinyl chloride	10		--	--	--	--	--
Chloroethane	10		--	--	--	--	--
Methylene chloride	10		--	--	--	--	--
Acetone	10		--	--	--	--	--
Carbon disulfide	10		--	--	--	--	--
1,1-Dichloroethene	10		--	--	--	--	--
1,1-Dichloroethane	10		--	--	--	--	--
1,2-Dichloroethene (total)	10		--	--	--	--	--
Chloroform	10		9 J	10	8 J	--	1 J
1,2-Dichloroethane	10		--	--	--	--	--
2-Butanone	10		--	--	--	--	--
1,1,1-Trichloroethane	10		--	--	--	--	--
Carbon tetrachloride	10		--	--	--	--	--
Bromodichloromethane	10		2 J	2 J	2 J	--	--
1,2-Dichloropropane	10		--	--	--	--	--
cis-1,3-Dichloropropene	10		--	--	--	--	--
Trichloroethene	10		--	--	--	--	--
Dibromochloromethane	10		--	--	--	--	--
1,1,2-Trichloroethane	10		--	--	--	--	--
Benzene	10		--	--	--	--	--
trans-1,3-Dichloropropene	10		--	--	--	--	--
Bromoform	10		--	--	--	--	--
4-Methyl-2-pentanone	10		--	--	--	--	--
2-Hexanone	10		--	--	--	--	--
Tetrachloroethene	10		--	--	--	--	--
1,1,2,2-Tetrachloroethane	10		--	--	--	--	--
Toluene	10		--	--	--	--	--
Chlorobenzene	10		--	--	--	--	--
Ethylbenzene	10		--	--	--	--	--
Styrene	10		--	--	--	--	--
Xylene (total)	10		--	--	--	--	--

Concentrations reported in micrograms per liter (ug/L).
-- Analyte not detected.
J Estimated value.

12-94TBL_XLSTbl 8

Table 9. Summary of Inorganic Parameters Detected in Surface-Water Samples Collected December 7, 1994, Syracuse China Site, Syracuse New York.

Parameter	Sample ID: SW-5	SW-6	SW-7	SW-8	(Dup) SW-8	SW-9	SW-10	SW-12
Aluminum	0.299	0.103 U	0.468	0.29	0.493	0.198 B	0.2	0.405
Antimony	0.038 U	0.038 U	0.038 U	0.038 U	0.038 U	0.038 U	0.038 U	0.038 U
Arsenic	0.001 U	0.001 U	0.001 U	0.001 U	0.002 B	0.001 U	0.001 U	0.001 B
Barium	0.032 B	0.045 B	0.058 B	0.031 B	0.046 B	0.024 B	0.029 B	0.039 B
Beryllium	0.001 U	0.001 U	0.001 U	0.001 U	0.001 U	0.001 U	0.001 U	0.001 U
Cadmium	0.002 U	0.002 U	0.002 U	0.002 U	0.002 U	0.002 U	0.002 U	0.002 U
Calcium	42.5	97.5	82	43.2	62.2	30.3	37.8	52.2
Chromium	0.002 U	0.002 U	0.002 U	0.002 U	0.002 U	0.002 U	0.002 U	0.002 U
Cobalt	0.003 U	0.003 U	0.003 U	0.003 U	0.003 U	0.003 U	0.003 U	0.003 U
Copper	0.016 B	0.002 B	0.007 B	0.01 B	0.005 B	0.006 B	0.002 B	0.004 B
Iron	0.093 U	0.206	0.01 U	0.098 U	0.143	0.177 U	0.13	0.148
Lead	0.023	0.03	0.04 J	0.02	0.031	0.023	0.022	.048J
Magnesium	7.81	13.7	3.36 B	8.01	11.2	6.06	7.56	0.048 J
Manganese	0.014 B	0.064	0.026	0.016	0.018	0.007 B	0.11 B	0.015
Mercury	0.0002 U	0.0002 U	0.0002 U	0.0002 U	0.0002 U	0.0002 U	0.0002 U	0.016
Nickel	0.008 U	0.008 U	0.008 U	0.024 B	0.008 U	0.008 U	0.008 U	0.008 U
Potassium	1.5 B	3.09 B	6.41	1.840 B	2.6 B	0.856 B	1.54	2.05 B
Selenium	0.001 U	0.001 U	0.001 U	0.001 U	0.001 U	0.001 U	0.001 U	0.001 U
Silver	0.003 U	0.003 U	0.003 U	0.003 U	0.003 U	0.003 U	0.003 U	0.035
Sodium	44.2	31	18.8	43.8	61.4	26.3	43.3	52.6
Thallium	0.001 U	0.001 U	0.001 U	0.001 U	0.001 U	0.001 U	0.001 U	0.001 U
Vanadium	0.008 B	0.006 U	0.006 U	0.006 U	0.006 U	0.006 U	0.006 U	0.006 U
Zinc	0.057 J	0.013 BJ	0.092 J	0.048 J	0.122 J	0.054 J	0.06 J	0.07 J
Cyanide	0.01 U	0.01 U	0.01 U	0.01 U	0.01 U	0.01 U	0.01 U	0.01 U

Concentrations reported in milligrams per liter (mg/L).

U Analyte analyzed for but not detected.

B Analyte result between instrument detection limit (IDL) and contract required detection limit (CRDL).

J Estimated value.

ED_006185_00000992-00067

Table 10. Summary of Volatile Organic Compounds Detected in Sediment Samples, Syracuse China Site, Syracuse, New York.

Parameter	Method Detection Limit	Sample ID:	SS-5	SS-6	SS-7	SS-8	SS-9	SS-10	SS-11
		Sample Depth:	1 ft.	1 ft.	1 ft.	1ft.	1 ft.	1 ft.	1 ft.
		Sample Date:	12/7/94	12/7/94	12/7/94	12/7/94	12/7/94	12/7/94	12/1 94
		Dilution Factor:	1.30	1.39	1.54	6.25	2.13	1.32	1.39
Chloromethane	10		-- J	-- J	-- J	-- J	-- J	-- J	--
Bromomethane	10		--	--	--	--	--	--	--
Vinyl chloride	10		--	--	--	--	--	--	--
Chloroethane	10		--	--	--	--	--	--	--
Methylene chloride	10		2 J	2 J	--	--	3 J	--	--
Acetone	10		30 UJ	28 UJ	17 UJ	110 UJ	41 UJ	-- J	36 J
Carbon disulfide	10		4 J	--	--	14 J	--	--	--
1,1-Dichloroethene	10		--	--	--	--	--	--	--
1,1-Dichloroethane	10		--	--	--	--	--	--	--
1,2-Dichloroethene (total)	10		--	--	--	--	--	--	--
Chloroform	10		--	--	--	--	--	--	--
1,2-Dichloroethane	10		--	--	--	--	--	--	--
2-Butanone	10		-- J	-- J	-- J	22 J	7 J	-- J	-- J
1,1,1-Trichloroethane	10		--	--	--	--	--	--	--
Carbon tetrachloride	10		--	--	--	--	--	--	--
Bromodichloromethane	10		--	--	--	--	--	--	--
1,2-Dichloropropane	10		--	--	--	--	--	--	--
cis-1,3-Dichloropropene	10		--	--	--	--	--	--	--
Trichloroethene	10		--	--	--	--	--	--	--
Dibromochloromethane	10		--	--	--	--	--	--	--
1,1,2-Trichloroethane	10		--	--	--	--	--	--	--
Benzene	10		--	--	--	--	--	--	--
trans-1,3-Dichloropropene	10		--	--	--	--	--	--	--
Bromoform	10		--	--	--	--	--	--	--
4-Methyl-2-pentanone	10		-- J	-- J	-- J	-- J	-- J	-- J	-- J
2-Hexanone	10		-- J	-- J	-- J	-- J	-- J	-- J	-- J
Tetrachloroethene	10		--	--	--	--	--	--	--
1,1,2,2-Tetrachloroethane	10		-- J	-- J	-- J	-- J	-- J	-- J	--
Toluene	10		--	--	--	--	--	--	--
Chlorobenzene	10		--	--	--	--	--	--	--
Ethylbenzene	10		--	--	--	--	--	--	--
Styrene	10		--	--	--	--	--	--	--
Xylene (total)	10		--	--	--	--	--	--	--

Concentrations reported in micrograms per kilogram (ug/kg).
-- Analyte not detected at or above the quantitation limit (method detection limit x dilution factor).
J Estimated value.
B Analyte also detected in associated blank.

Table 10. Summary of Volatile Organic Compounds Detected in Sediment Samples, Syracuse China Site, Syracuse, New York.

Parameter	Method Detection Limit	Sample ID: / Sample Depth: / Sample Date: / Dilution Factor:	SS-12 1 ft. 12/7/94 2.70	BM-1 1 ft. 12/1/94 1.59	BM-2 1 ft. 12/1/94 1.28	Field Blank 12/1/94 1.00	Field Blank 12/7/94 1.00	Trip Blank 12/1/94 1.00	Trip Blank 12/7/94 1.00
Chloromethane	10		-- J	--	--	--	--	--	--
Bromomethane	10		--	--	--	--	--	--	--
Vinyl chloride	10		--	--	--	--	--	--	--
Chloroethane	10		--	--	--	--	--	--	--
Methylene chloride	10		--	--	--	--	--	--	--
Acetone	10		-- J	33 J	-- J	-- J	--	-- J	--
Carbon disulfide	10		--	--	--	--	--	--	--
1,1-Dichloroethene	10		--	--	--	--	--	--	--
1,1-Dichloroethane	10		--	--	--	--	--	--	--
1,2-Dichloroethene (total)	10		--	--	--	--	--	--	--
Chloroform	10		--	--	--	--	--	--	1 J
1,2-Dichloroethane	10		--	--	--	--	--	--	--
2-Butanone	10		-- J	-- J	-- J	--	--	--	--
1,1,1-Trichloroethane	10		--	--	--	--	--	--	--
Carbon tetrachloride	10		--	--	--	--	--	--	--
Bromodichloromethane	10		--	--	--	--	--	--	--
1,2-Dichloropropane	10		--	--	--	--	--	--	--
cis-1,3-Dichloropropene	10		--	--	--	--	--	--	--
Trichloroethene	10		--	--	--	--	--	--	--
Dibromochloromethane	10		--	--	--	--	--	--	--
1,1,2-Trichloroethane	10		--	--	--	--	--	--	--
Benzene	10		--	--	--	--	--	--	--
trans-1,3-Dichloropropene	10		--	--	--	--	--	--	--
Bromoform	10		--	--	--	--	--	--	--
4-Methyl-2-pentanone	10		-- J	-- J	-- J	--	--	--	--
2-Hexanone	10		-- J	-- J	-- J	--	--	--	--
Tetrachloroethene	10		--	--	--	--	--	--	--
1,1,2,2-Tetrachloroethane	10		-- J	--	--	--	--	--	--
Toluene	10		--	4 J	2 J	--	--	--	--
Chlorobenzene	10		--	--	--	--	--	--	--
Ethylbenzene	10		--	--	--	--	--	--	--
Styrene	10		--	--	--	--	--	--	--
Xylene (total)	10		--	--	--	--	--	--	--

Concentrations reported in micrograms per kilogram (ug/kg).
-- Analyte not detected at or above the quantitation limit (method detection limit x dilution factor).
J Estimated value.
B Analyte also detected in associated blank.

12-94TBL.XLS Tbl 10

Table 11. Summary of Inorganic Parameters Detected in Sediment Samples, Syracuse China Site, Syracuse, New York.

Parameter	Sample ID:	SS-5	SS-6	SS-7	SS-8	SS-9	SS-10	SS-11	SS-12
	Sample Depth:	1 ft.	1 ft.	1 ft.	1 ft.	1 ft.	1 ft.	1 ft.	1 ft.
	Sample Date:	12/7/94	12/7/94	12/7/94	12/7/94	12/7/94	12/7/94	12/1/94	12/7/94
Aluminum		7,200	6,860	4,760	10,100	12,700	9,270	9,470	15,500
Antimony		11.6 UJ	10.2 UJ	11.6 UJ	43.9 UJ	13.2 UJ	18.6 UJ	10.5 UJ	23.2 UJ
Arsenic		1.6 B	3.2	0.40 B	5.2 B	2.8 B	3.2 B	0.28 U	7.5
Barium		56.7 B	50.7 B	109	61.2 B	113	64.1 B	120	89.8 B
Beryllium		0.30 U	0.51 B	0.30 U	1.2 U	0.45 B	0.57 B	0.28 U	0.61 U
Cadmium		2.1	0.54 U	0.61 U	2.3 U	1.2 B	0.98 U	0.55 U	1.2 U
Calcium		5,610 J	4,160 J	5,930 J	50,500 J	35,900 J	124,000 J	9,000 J	8,330 J
Chromium		6.0 J	13.5 J	4.0 J	14.2 J	18.3 J	11.0 J	3.2 J	28.6 J
Cobalt		3.5 B	5.8 B	4.6 B	9.2 B	12.1 B	5.0 B	2.4 B	10.1 B
Copper		36.4 J	3.4 BJ	6.9 BJ	76.0 J	31.7 J	11.1 BJ	6.3 U	154 J
Iron		2,260	16,100	563	5,500	6,520	6,330	583	4,900
Lead		5,110	51.9	639	1,560	3,280	668	3,060	3,740
Magnesium		1,160 BJ	2,380 J	272 BJ	3,460 BJ	10,300 J	17,200 J	399 JB	2,470 BJ
Manganese		36.3 J	315 J	11.1 J	73.4 J	176 J	189 J	14.1 J	61.2 J
Mercury		0.24	0.12 U	0.14	0.62	0.31	0.20 U	0.13 U	1.1
Nickel		7.0 B	5.8 B	2.4 U	9.2 U	7.4 B	3.9 U	3.2 B	39.4
Potassium		919 B	651 B	873 B	1,430 B	1,830	1,650 B	1,980	1,540 B
Selenium		0.64 B	0.27 U	0.30 U	1.5 B	0.35 U	0.49 U	0.28 U	2.0 B
Silver		9.1	0.81 U	1.5 U	4.6 U	3.2 U	1.5 U	0.83 U	31.8
Sodium		1,800	86.6 B	1,790	1,960 B	2,540	1,940 B	4,710	2,640 B
Thallium		0.30 U	0.27 U	0.30 U	1.2 U	0.35 U	0.49 U	0.28 U	0.61 U
Vanadium		11.1 B	20.1	2.6 B	8.9 B	16.5 B	23.3 B	2.5 B	22.6 B
Zinc		260	57.1	328	708	329	130	319	746
Cyanide		0.74 UJ	0.64 UJ	0.72 UJ	2.8 UJ	0.86 UJ	1.2 UJ	0.67 UJ	2.3 J

Concentrations reported in milligrams per kilogram (mg/kg).
U Analyte analyzed for but not detected.
B Analyte result between instrument detection limit (IDL) and contract required detection limit (CRDL).
J Estimated value.

ED_006185_00000992-00070

Table 12. Summary of Polychlorinated Biphenyl Compounds Detected in Sediment Samples Collected December 1, 1994, Syracuse China Site, Syracuse, New York.

Parameter	Method Detection Limit	Sample ID: Sample Depth: Dilution Factor:	BM-1 1 ft. 1.33	BM-2 1 ft. 1.35
Aroclor-1016	33		--	--
Aroclor-1221	67		--	--
Aroclor-1232	33		--	--
Aroclor-1242	33		--	--
Aroclor-1248	33		--	--
Aroclor-1254	33		--	--
Aroclor-1260	33		--	--

Concentrations reported in micrograms per kilogram (ug/kg).

-- Analyte not detected at or above the quantitation limit (method detection limit x dilution factor).

Table 13. Metal Concentrations in Sediment and New York State Sediment Criteria, Syracuse China Site, Syracuse, New York.

	Sediment Criteria (mg/kg)		Number of Samples Greater than Criteria	
	LEL	SEL	LEL	SEL
Arsenic	6	33	1	0
Chromium	26	110	1	0
Copper	16	110	4	1
Lead	31	110	8	7
Mercury	0.15	1.3	4	0
Nickel	16	50	1	0
Silver	1	2.2	2	2
Zinc	120	270	7	5

LEL Lowest effect level.
mg/kg Milligrams per kilogram.
SEL Severe effect level.

Table 14. Calculated Hydraulic Conductivity Values for Monitoring Wells at the Syracuse China Site, Syracuse, New York.

Monitoring Well	Screened Unit	Hydraulic Conductivity (k)
MW-1	Upper	6.27×10^{-5}
MW-2	Upper	1.35×10^{-4}
MW-3	Upper	1.49×10^{-4}
MW-4	Upper	2.03×10^{-3}
MW-5	Upper	3.38×10^{-4}
MW-6	Upper	2.63×10^{-4}
MW-7	Upper	2.44×10^{-4}
MW-4I	Till	3.26×10^{-6}

Table 15. Summary of Total and Dissolved Metals Detected in Groundwater Samples Collected on August 17, 1995 at Syracuse China Landfill, Syracuse China Company, Syracuse, New York.

Analyte	Sample Location: / Sample Date:	MW-1 8/17/95	MW-2 8/17/95	MW-3 8/17/95	MW-4 8/17/95	MW-4I 8/17/95
Aluminum						
Total		1,770	4,680	51,400	1,790	55,400
Dissolved		2,480	5,050	2,370	656	6,460
Antimony						
Total		33.0 U	33.0 U	34.9 B	33.0 U	49.7 B
Dissolved		5.5 B	5.1 B	4.0 B	3.0 U	5.0 B
Arsenic						
Total		3.0 U	6.3 B	107	3.0 U	41.3
Dissolved		3.0 U	3.0 U	3.7 B	3.0 U	3.0 U
Barium						
Total		49.9 B	55.4 B	403	40.3 B	590
Dissolved		46.2 B	45.6 B	45.4 B	24.0 B	58.4 B
Beryllium						
Total		1.0 U	1.0 U	5.1	1.0 U	6.6
Dissolved		1.0 U	1.0 U	1.0 U	1.0 U	1.3 U
Cadmium						
Total		3.0 U	3.0 U	3.0 U	3.0 U	3.0 U
Dissolved		1.0 U	1.0 U	1.0 U	1.0 U	1.0 U
Calcium						
Total		150,000	450,000	656,000	390,000	792,000
Dissolved		136,000 J	380,000 J	157,000 J	369,000 J	400,000 J
Chromium						
Total		5.2 B	7.5 B	67.4	3.8 B	132
Dissolved		4.0 B	6.3 B	3.7 B	1.9 B	9.3 B
Cobalt						
Total		4.3 BJ	6.4 BJ	47.4 BJ	4.7 BJ	61.2 J
Dissolved		3.0 U	3.0 U	3.0 U	3.0 U	3.0 U
Copper						
Total		18.0 U	27.6 U	124	14.9 U	236
Dissolved		2.0 U	3.8 U	2.0 U	2.0 U	2.7 U
Iron						
Total		3,350	10,900	126,000	3,000	117,000
Dissolved		1,190	3,940	2,190	590	5,200
Lead						
Total		4.4	8.9	213	6.6	99.1
Dissolved		3.1	3.5	5.7	2.8 B	4.7

Concentrations reported in micrograms per liter (ug/L).

U Analyte result less than instrument detection limit (IDL).

B Analyte result between IDL and contrct required detection limit (CRDL).

J Estimated.

-- Analyte not analyzed for.

Table 15. Summary of Total and Dissolved Metals Detected in Groundwater Samples Collected on August 17, 1995 at Syracuse China Landfill, Syracuse China Company, Syracuse, New York.

Analyte	Sample Location: / Sample Date:	MW-1 8/17/95	MW-2 8/17/95	MW-3 8/17/95	MW-4 8/17/95	MW-4I 8/17/95
Magnesium						
Total		41,500 J	70,400 J	207,000 J	24,300 J	174,000 J
Dissolved		35,600	54,000	43,500	24,000	48,700
Manganese						
Total		123 J	1,510 J	3,470 J	5,720 J	4,570 J
Dissolved		30.1	278	472	2,020	1,150
Mercury						
Total		0.20 U	0.20 U	0.20 U	0.20 U	0.20 U
Dissolved		0.20 U	0.20 U	0.20 U	0.20 U	0.20 U
Nickel						
Total		7.0 UJ	12.5 BJ	91.1 J	10.0 BJ	155 J
Dissolved		3.7 B	10.2 B	5.4 B	5.5 B	13.6 B
Potassium						
Total		1,830	3,520	8,560	4,270	19,400
Dissolved		2,100	5,930	2,180	5,110	19,700
Selenium						
Total		5.0 B	2.0 U	5.8	2.0 U	5.5
Dissolved		4.1 B	2.0 U	2.5 B	2.0 U	2.0 U
Silver						
Total		2.5 BJ	2.0 U	2.0 U	2.0 U	2.0 U
Dissolved		1.0 U	1.0 U	1.0 U	1.0 U	1.0 U
Sodium						
Total		14,900 J	51,600 J	43,500 J	40,400 J	30,700 J
Dissolved		14,700	48,300	33,400	38,700	26,800
Thallium						
Total		4.0 U	4.0 U	4.0 U	4.0 U	4.0 U
Dissolved		4.0 U	4.0 U	4.0 U	4.0 U	4.0 U
Vanadium						
Total		1.6 U	16.1 B	93.0	1.0 U	96.7
Dissolved		1.0 U	11.5 B	8.5 B	1.0 U	15.3 U
Zinc						
Total		73.9	85.1	261	53.5	419
Dissolved		18.8 BJ	16.1 BJ	14.9 BJ	23.8 J	36.8 J
Cyanide						
Total		--	--	--	--	--
Dissolved		--	--	--	--	--

Concentrations reported in micrograms per liter (ug/L).

U Analyte result less than instrument detection limit (IDL).

B Analyte result between IDL and contrct required detection limit (CRDL).

J Estimated.

-- Analyte not analyzed for.

Table 15. Summary of Total and Dissolved Metals Detected in Groundwater Samples Collected on August 17, 1995 at Syracuse China Landfill, Syracuse China Company, Syracuse, New York.

Analyte	Sample Location: / Sample Date:	MW-5 8/17/95	MW-6 8/17/95	(MW-6 Rep) Rep-1 8/17/95	MW-7 8/17/95	FB 8/17/95
Aluminum						
Total		622	41,600	46,600	7,500	28.0 B
Dissolved		575	3,040	4,320	3,130	--
Antimony						
Total		33.0 U	33.0 U	33.0 U	33.0 U	33.0 U
Dissolved		5.3 B	4.0 B	3.9 B	5.2 B	--
Arsenic						
Total		7.0 B	27.6	35.6	15.6	3.0 U
Dissolved		3.0 U	3.0 U	3.0 U	3.0 U	--
Barium						
Total		45.8 B	545	541	89.6 B	2.0 U
Dissolved		43.1 B	93.4 B	111 B	46.6 B	--
Beryllium						
Total		1.0 U	5.4	7.2	1.5 B	1.0 U
Dissolved		1.0 U	1.0 U	1.2 U	1.0 U	--
Cadmium						
Total		3.0 U	3.0 U	3.0 U	3.0 U	3.0 U
Dissolved		1.0 U	1.0 U	1.0 U	1.0 U	--
Calcium						
Total		88,400	477,000	518,000 J	299,000	202 B
Dissolved		87,800 J	92,200 J	90,000 J	185,000 J	--
Chromium						
Total		3.0 U	76.4	87.6	13.3	3.0 U
Dissolved		1.9 B	4.7 B	6.2 B	4.8 B	--
Cobalt						
Total		3.0 UJ	60.2 J	63.0 J	12.3 BJ	3.0 U
Dissolved		3.0 U	3.0 U	3.0 U	3.0 U	--
Copper						
Total		7.1 U	276	260	38.8	3.0 U
Dissolved		2.0 U	2.0 U	2.0 U	2.0 U	--
Iron						
Total		1,890	85,100	95,500	17,800	70.1 B
Dissolved		627	2,090	2,950	2,340	--
Lead						
Total		3.4	56.5	56.9	292	3.0 B
Dissolved		3.9	3.6	3.2	34.2	--

Concentrations reported in micrograms per liter (ug/L).

U Analyte result less than instrument detection limit (IDL).

B Analyte result between IDL and contrct required detection limit (CRDL).

J Estimated.

-- Analyte not analyzed for.

Table 15. Summary of Total and Dissolved Metals Detected in Groundwater Samples Collected on August 17, 1995 at Syracuse China Landfill, Syracuse China Company, Syracuse, New York.

Analyte	Sample Location: / Sample Date:	MW-5 8/17/95	MW-6 8/17/95	Rep-1 8/17/95	MW-7 8/17/95	FB 8/17/95
Magnesium						
Total		29,400 J	158,000 J	179,000 J	53,400 J	50.4 B
Dissolved		29,900	20,500	23,400	11,800	--
Manganese						
Total		30.9 J	2,790 J	3,080 J	1,450 J	2.0 B
Dissolved		12.6 BJ	121 J	152	864	--
Mercury						
Total		0.20 U	0.20 B	0.20 U	0.20 U	0.20 U
Dissolved		0.20 U	0.20 U	0.20 U	0.20 U	--
Nickel						
Total		7.0 UJ	106 J	119 J	21.2 UJ	7.8 B
Dissolved		2.7 B	5.0 B	7.6 B	6.3 B	--
Potassium						
Total		9,010	10,100	10,100	5,970	681 U
Dissolved		11,300	2,660	3,480	6,570	--
Selenium						
Total		2.0 U	6.0	6.9	3.3 B	2.0 U
Dissolved		2.0 U	2.0 U	2.0 U	2.0 U	--
Silver						
Total		2.0 U	41.8 J	4.0 BJ	2.0 U	2.0 U
Dissolved		1.0 U	1.0 U	1.0 U	1.0 U	--
Sodium						
Total		68,000 J	19,300 J	21,700 J	38,300 J	42.0 U
Dissolved		62,500	17,400	15,200	34,100	--
Thallium						
Total		4.0 U	4.0 U	4.0 U	4.0 U	4.0 U
Dissolved		4.0 U	4.0 U	4.0 U	4.0 U	--
Vanadium						
Total		2.3 U	56.9	58.1	18.9 B	1.0 U
Dissolved		3.3 B	3.0 U	3.7 U	8.3 U	--
Zinc						
Total		62.1	342	342	75.7 U	27.6
Dissolved		26.5 J	56.6 J	15.0 BJ	54.9 J	--
Cyanide						
Total		--	--	--	--	--
Dissolved		--	--	--	--	--

Concentrations reported in micrograms per liter (ug/L).

U Analyte result less than instrument detection limit (IDL).

B Analyte result between IDL and contrct required detection limit (CRDL).

J Estimated.

-- Analyte not analyzed for.

Table16. Summary of Total Metals and Cyanide Detected in Surface Water Samples Collected at Syracuse China Landfill, Syracuse China Company, Syracuse, New York.

Analyte	Sample Location: / Sample Date:	SW-1 8/17/95	SW-2 8/17/95	SW-2A 8/17/95	SW-3 8/17/95
Aluminum		129 B	173 B	--	139 B
Antimony		33.0 U	33.0 U	--	33.0 U
Arsenic		3.0 U	3.0 U	--	3.0 U
Barium		36.2 B	33.2 B	--	38.6 B
Beryllium		1.0 U	1.0 U	--	1.0 U
Cadmium		3.0 U	3.0 U	--	3.0 U
Calcium		63,100	36,200	--	37,000
Chromium		3.0 U	3.0 U	--	3.0 U
Cobalt		3.0 UJ	3.0 UJ	--	3.0 UJ
Copper		15.7 U	12.8 U	--	6.5 U
Iron		269	301	--	194
Lead		51.3	79.9	2,100	41.3
Magnesium		9,320 J	7,190 J	--	7,850 J
Manganese		19.9 J	18.3 J	--	18.9 J
Mercury		0.20 U	0.20 U	--	0.20 U
Nickel		7.0 UJ	7.0 UJ	--	7.0 UJ
Potassium		2,050	1,670	--	1,730
Selenium		2.0 U	2.0 U	--	2.0 U
Silver		2.7 BJ	2.0 U	--	2.0 U
Sodium		22,100 J	19,300 J	--	19,200 J
Thallium		4.0 U	4.0 U	--	4.0 U
Vanadium		7.1 U	3.1 B	--	2.4 B
Zinc		39.6	23.3	--	18.6 B
Cyanide		10.0 U	10.0 U	--	10.0 U

Concentrations reported in micrograms per liter (ug/L).

U Analyte result less than instrument detection limit (IDL).

B Analyte result between IDL and contrct required detection limit (CRDL).

J Estimated.

-- Analyte not analyzed for.

Table16. Summary of Total Metals and Cyanide Detected in Surface Water Samples Collected at Syracuse China Landfill, Syracuse China Company, Syracuse, New York.

Analyte	Sample Location: / Sample Date:	SW-4 8/17/95	SW-4A 8/17/95	SW-5 8/17/95	SW-6 8/17/95
Aluminum		533	--	211	401
Antimony		33.0 U	--	33.0 U	33.0 U
Arsenic		6.4 B	--	3.0 U	3.0 U
Barium		52.0 B	--	36.2 B	39.6 B
Beryllium		1.0 U	--	1.0 U	1.0 U
Cadmium		3.0 U	--	3.0 U	3.0 U
Calcium		39,100	--	35,900	37,200
Chromium		4.2 B	--	3.0 U	3.0 U
Cobalt		3.0 UJ	--	3.0 U	3.0 U
Copper		9.0 U	--	8.1 U	8.6 U
Iron		2,360	--	94.8 B	178
Lead		315	103	42.7	101
Magnesium		8,130 J	--	8,090	8,300
Manganese		259 J	--	14.9 B	23.9
Mercury		0.20 U	--	0.20 U	0.20 U
Nickel		7.0 UJ	--	7.0 U	7.0 U
Potassium		2,140	--	2,540	1,960
Selenium		2.0 U	--	2.0 U	2.0 U
Silver		2.3 BJ	--	2.2 BJ	2.0 U
Sodium		19,600 J	--	18,500	18,900
Thallium		4.0 U	--	4.0 U	4.0 U
Vanadium		1.8 B	--	3.2 B	4.0 U
Zinc		52.4	--	46.7	53.6
Cyanide		10.0 U	--	10.0 U	10.0 U

Concentrations reported in micrograms per liter (ug/L).

U Analyte result less than instrument detection limit (IDL).

B Analyte result between IDL and contrct required detection limit (CRDL).

J Estimated.

-- Analyte not analyzed for.

Table 17. Summary of Total Metals and Cyanide Detected in Sediment Samples Collected at Syracuse China Landfill, Syracuse China Company, Syracuse, New York.

Analyte	Sample Location: / Sample Date:	SED-1 8/17/95	SED-2 8/17/95	SED-2A 8/17/95	SED-3 8/17/95
Aluminum		10,500	11,600	--	11,800
Antimony		2.4 UJ	4.2 BJ	--	4.3 UJ
Arsenic		44.3	64.1	--	48.3
Barium		86.4 B	148 B	--	135 B
Beryllium		0.81 U	1.1 U	--	1.4 U
Cadmium		2.5 B	3.2 B	--	3.6 B
Calcium		33,000	10,900	--	12,900
Chromium		32.1	29.8	--	32.0
Cobalt		4.6 B	4.6 B	--	5.1 B
Copper		80.4	64.8	--	88.0
Iron		25,700	26,500	--	27,300
Lead		3,380	4,840	2,020	4,510
Magnesium		5,060	2,860	--	2,110
Manganese		158	86.6	--	166
Mercury		0.37 U	0.54 U	--	0.75 U
Nickel		14.2 B	13.0 B	--	15.5 B
Potassium		853	685 B	--	900 B
Selenium		4.4	5.8	--	4.4 B
Silver		4.1 B	5.1 B	--	4.9 B
Sodium		1,120	1,010 B	--	1,380 B
Thallium		3.2 U	4.3 U	--	5.7 U
Vanadium		48.1	44.6 B	--	41.3 B
Zinc		599 J	796 J	--	722 J
Cyanide		R	R	--	R

Concentrations reported in milligrams per kilogram (mg/kg).

U Analyte result less than instrument detection limit (IDL).

B Analyte result between IDL and contrct required detection limit (CRDL).

J Estimated.

-- Analyte not analyzed for.

R Rejected result

Table 17. Summary of Total Metals and Cyanide Detected in Sediment Samples Collected at Syracuse China Landfill, Syracuse China Company, Syracuse, New York.

Analyte	Sample Location: / Sample Date:	SED-4 8/17/95	SED-4A 8/17/95	SED-5 8/17/95	SED-6 8/17/95	SED-6A 8/17/95
Aluminum		8,080	--	12,000	10,800	--
Antimony		6.3 UJ	--	2.0 UJ	1.4 UJ	--
Arsenic		41.1	--	5.7 B	4.5 B	--
Barium		128 B	--	80.4 B	67.0 B	--
Beryllium		2.1 U	--	0.66 U	0.46 U	--
Cadmium		3.7 B	--	1.8 B	2.2 B	--
Calcium		9,950	--	19,300	8,800	--
Chromium		20.6 B	--	27.6	16.9	--
Cobalt		3.8 B	--	7.9 B	6.1 B	--
Copper		57.6	--	110	137	--
Iron		17,600	--	5,840	4,170	--
Lead		3,720	617	2,580	4,000	6,010
Magnesium		1,690 B	--	3,480	2,510	--
Manganese		1,540	--	187	60.2	--
Mercury		1.0 U	--	0.83 J	0.83 J	--
Nickel		19.0 B	--	17.2 B	14.4 B	--
Potassium		519 B	--	1,340	1,180	--
Selenium		6.8 B	--	1.3 U	1.5 B	--
Silver		2.1 U	--	15.7	35.0	--
Sodium		949 B	--	2,100	2,520	--
Thallium		8.4 U	--	2.6 U	1.8 U	--
Vanadium		45.2 B	--	21.4 B	21.8 B	--
Zinc		775 J	--	596 J	612 J	--
Cyanide		R	--	R	R	--

Concentrations reported in milligrams per kilogram (mg/kg).

U Analyte result less than instrument detection limit (IDL).

B Analyte result between IDL and contrct required detection limit (CRDL).

J Estimated.

-- Analyte not analyzed for.

R Rejected result

Table 18. Summary of the Dissolved Metals Concentrations in Groundwater Samples Collected on August 17, 1995, Exceeding the New York State Department of Environmental Conservation Division of Water Technical and Operational Guidance Series (TOGS 1.1.1) Ambient Water Quality Standards and Guidance Values, Syracuse China Site, Syracuse, New York.

	TOGS 1.1.1 Standard	MW-1 8/17/95	MW-2 8/17/95	MW-3 8/17/95	MW-4 8/17/95	MW-4I 8/17/95	MW-5 8/17/95	MW-6 8/17/95	MW-7 8/17/95
Iron	0.3	1.19	3.94	2.19	0.59	5.2	0.627	2.09	2.34
Magnesium	35*	35.6	54.0	43.5	--	48.7	--	--	--
Manganese	0.3	--	--	0.472	2.02	1.15	--	--	0.864
Sodium	20	--	48.3	33.4	38.7	26.8	62.5	--	34.1
Zinc	0.3	--	--	--	--	--	--	--	--

Concentrations reported in milligrams per liter (mg/L).

* Guidance Value.

-- Standard Not Exceeded.

ED_006185_00000992-00082

Table 19. Summary of the Total (Unfiltered) Metals Concentrations in Groundwater Samples Collected on January 5, 1995, Exceeding the New York State Department of Environmental Conservation Division of Water Technical and Operational Guidance Series (TOGS 1.1.1) Ambient Water Quality Standards and Guidance Values, Syracuse China Site, Syracuse, New York.

Parameter	TOGS 1.1.1 Standard	MW-1 1/5/95	MW-2 1/5/95	MW-3 1/5/95	MW-3 (Duplicate) 1/5/95	MW-4 1/5/95	MW-4I 1/5/95	MW-5 1/5/95	MW-6 1/5/95	MW-7 1/5/95
Arsenic	0.025	--	--	0.049	0.062	0.027	0.027	--	0.043	--
Copper	0.2	--	--	--	--	--	--	--	0.356	--
Iron	0.3	20.7	20.9 J	70.2 J	81.4	95.8 J	85.2 J	9.89 J	139 J	17.2 J
Lead	0.025	--	--	0.176	0.254	0.051 J	--	--	0.066	0.216
Magnesium	35*	74.6	82.2	206	199	99.4	157	45.8	221	37.2
Manganese	0.3	0.77	2.28	3.46	3.39	38.2	3.92 J	--	4.21	2.53
Sodium	20	22.3	1,020	32.6	32.8	38.9	25.5	71.6	--	33.6
Vanadium	0.014	--	0.24 B	0.074	0.075	0.088	0.074 J	--	0.109	--
Zinc	0.3	--	--	--	--	--	--	--	0.461	--

Concentrations reported in milligrams per liter (mg/L).

B Analyte result between instrument detection limit (IDL) and contract required detection limit (CRDL).

J Estimated value.

-- Standard not exceeded.

* Guidance value.

ED_006185_00000992-00083

Table 20. Summary of Total (Unfiltered) Metals Concentrations in Groundwater Samples Collected on August 17, 1995, Exceeding the New York State Department of Environmental Conservation Division of Water Technical and Operational Guidance Series (TOGS 1.1.1) Ambient Water Quality Standards and Guidance Values, Syracuse China Site, Syracuse, New York.

Analyte	Sample Location: / Sample Date:	MW-1 8/17/95	MW-2 8/17/95	MW-3 8/17/95	MW-4 8/17/95	MW-4I 8/17/95	MW-5 8/17/95	MW-6 8/17/95	(MW-6 Rep) Rep-1 8/17/95	MW-7 8/17/95
Arsenic		--	--	0.107	--	0.0413	--	0.0276	0.0356	--
Copper		--	--	--	--	0.236	--	0.276	0.260	--
Iron		3.35	10.9	126	3	117	1.89	85.1	95.5	17.8
Lead		--	--	0.213	--	0.0991	--	0.0565	0.0569	0.292
Magnesium		41.5 J	70.4 J	207 J	--	174 J	--	158 J	179 J	53.4 J
Manganese		--	1.51 J	3.47 J	5.72 J	4.57 J	--	2.79 J	3.08 J	1.45 J
Sodium		--	51.6 J	43.5 J	40.4 J	30.7 J	68 J		21.7 J	38.3 J
Vanadium		--	0.0161 B	0.093	--	0.0967	--	0.0569	0.0581	0.0189 B
Zinc		--	--	--	--	0.419	--	0.342	0.342	--

Concentrations reported in milligrams per liter (mg/L).

B Analyte result between IDL and contrct required detection limit (CRDL).

J Estimated.

-- Standard not exceeded.

ED_006185_00000992-00084

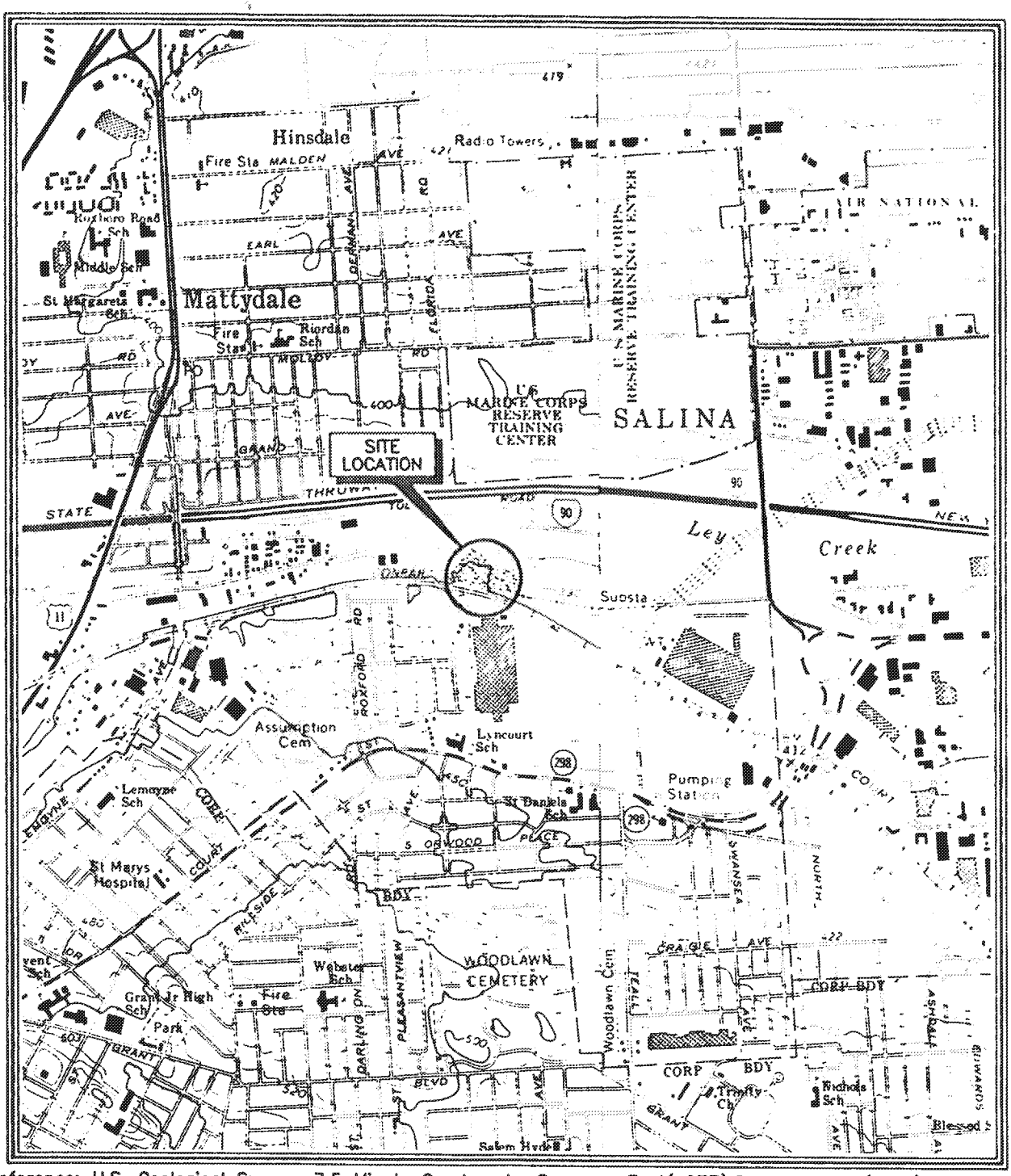

Reference: U.S. Geological Survey, 7.5 Minute Quadrangle, Syracuse East(1977),Syracuse West(1978), New York

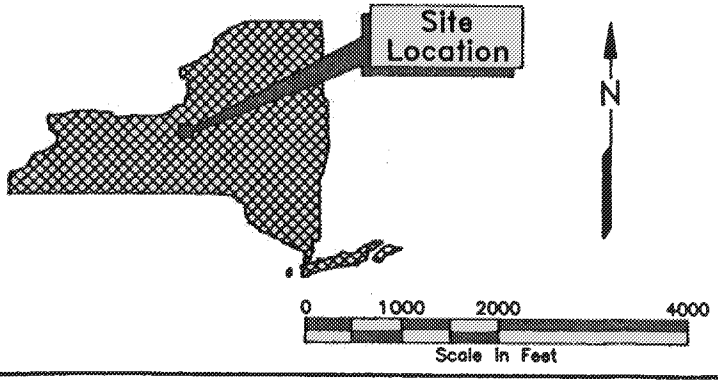

SITE LOCATION

SYRACUSE CHINA SITE LANDFILL
SYRACUSE CHINA CORPORATION
Syracuse, New York

DRAWN: TAD CORP.	DATE:	FIGURE 1
APP'D:	APRIL 1993	

GERAGHTY & MILLER, INC.
Environmental Services

DATE: V. 1995	PRJCT. NO.: AY0146001	FILE NO.:	CAD FILE: G130A	COMPILER: B. GRAY	MGR.: B. GRAY	DRAFTER: TAD/FJF

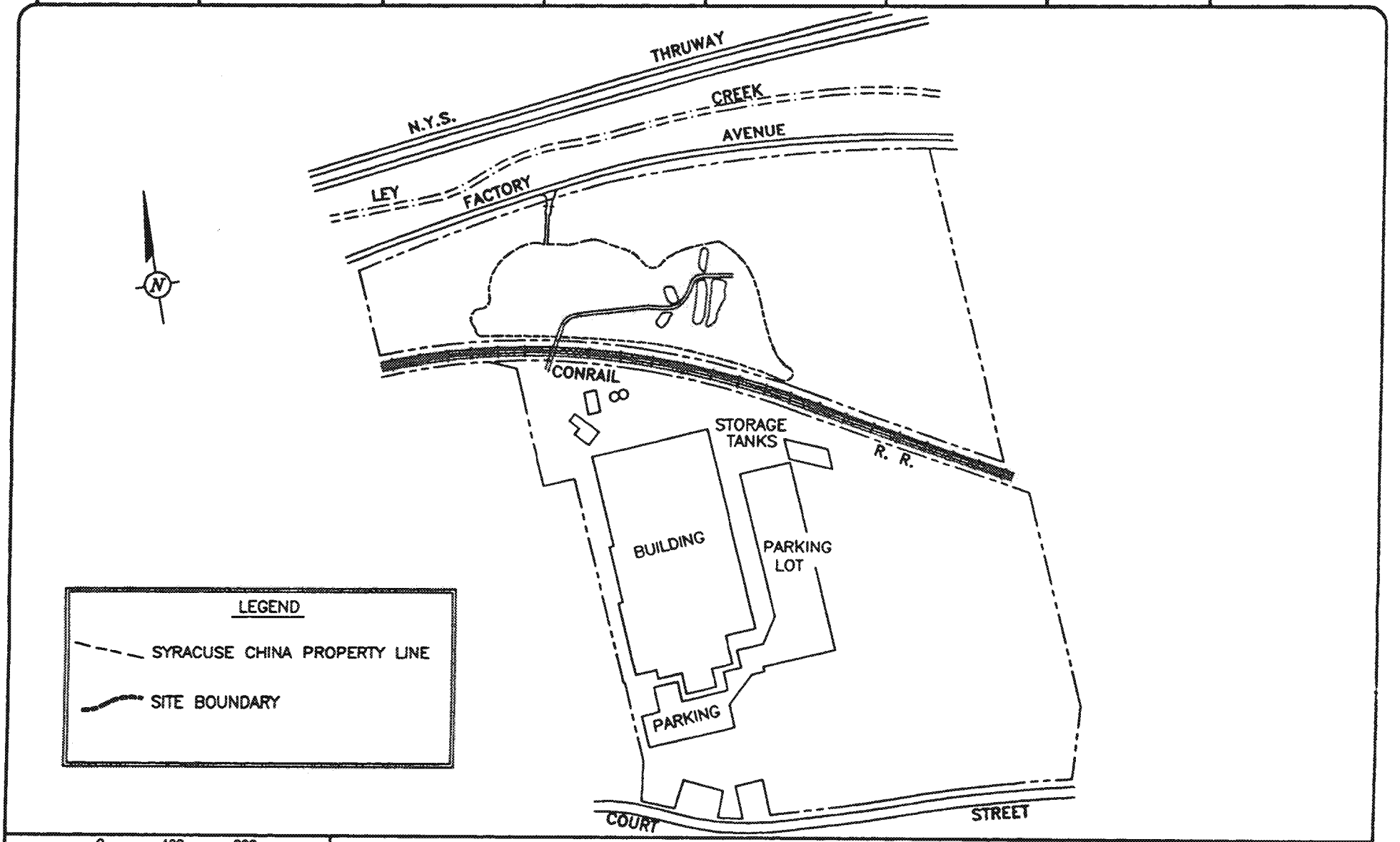

GERAGHTY & MILLER, INC.
Environmental Services

LOCATION OF SITE LANDFILL,
SYRACUSE CHINA SITE, SYRACUSE CHINA COMPANY,
SYRACUSE, NEW YORK

FIGURE 2

ED_006185_00000992-00086

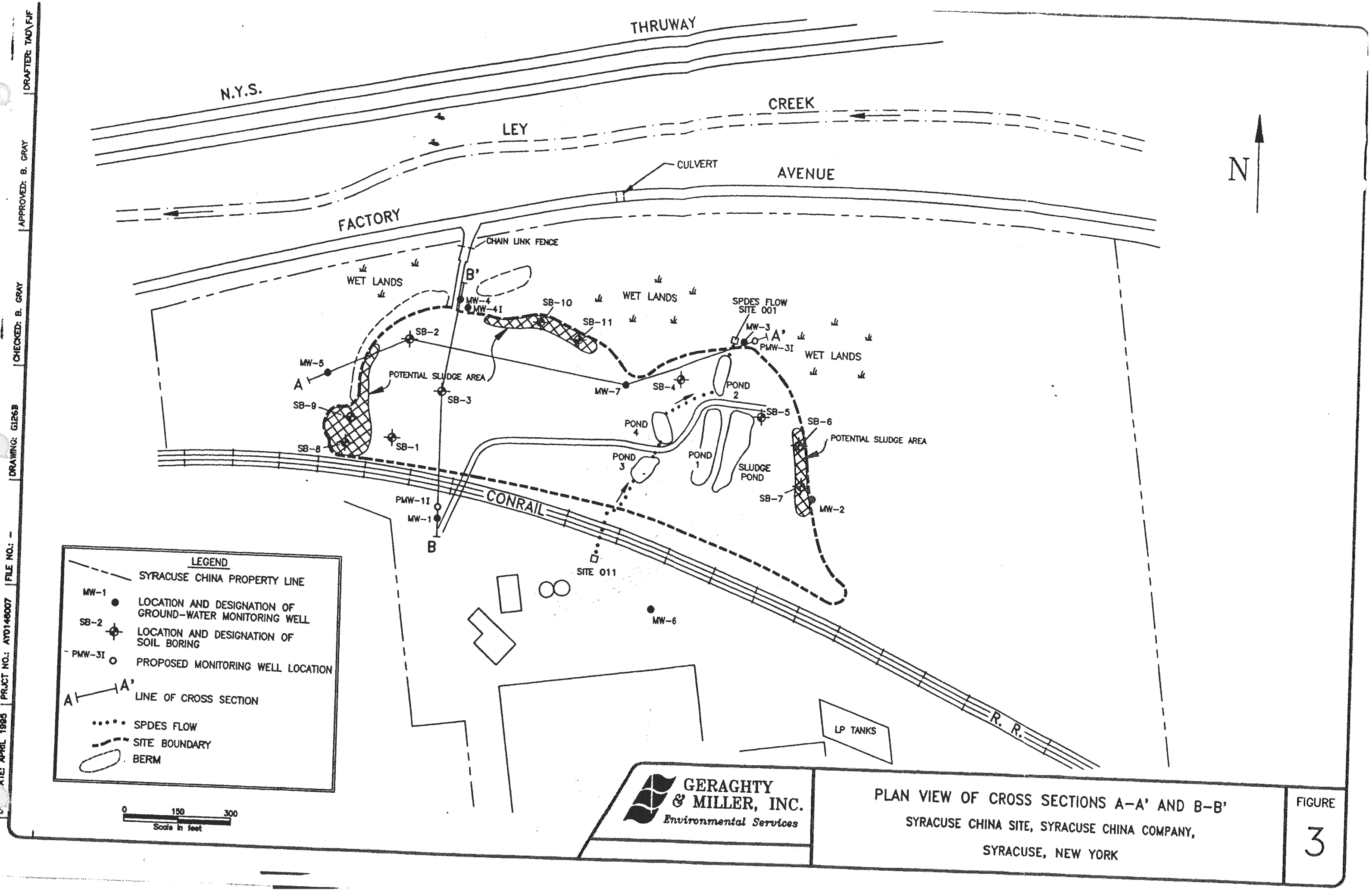

ED_006185_00000992-00087

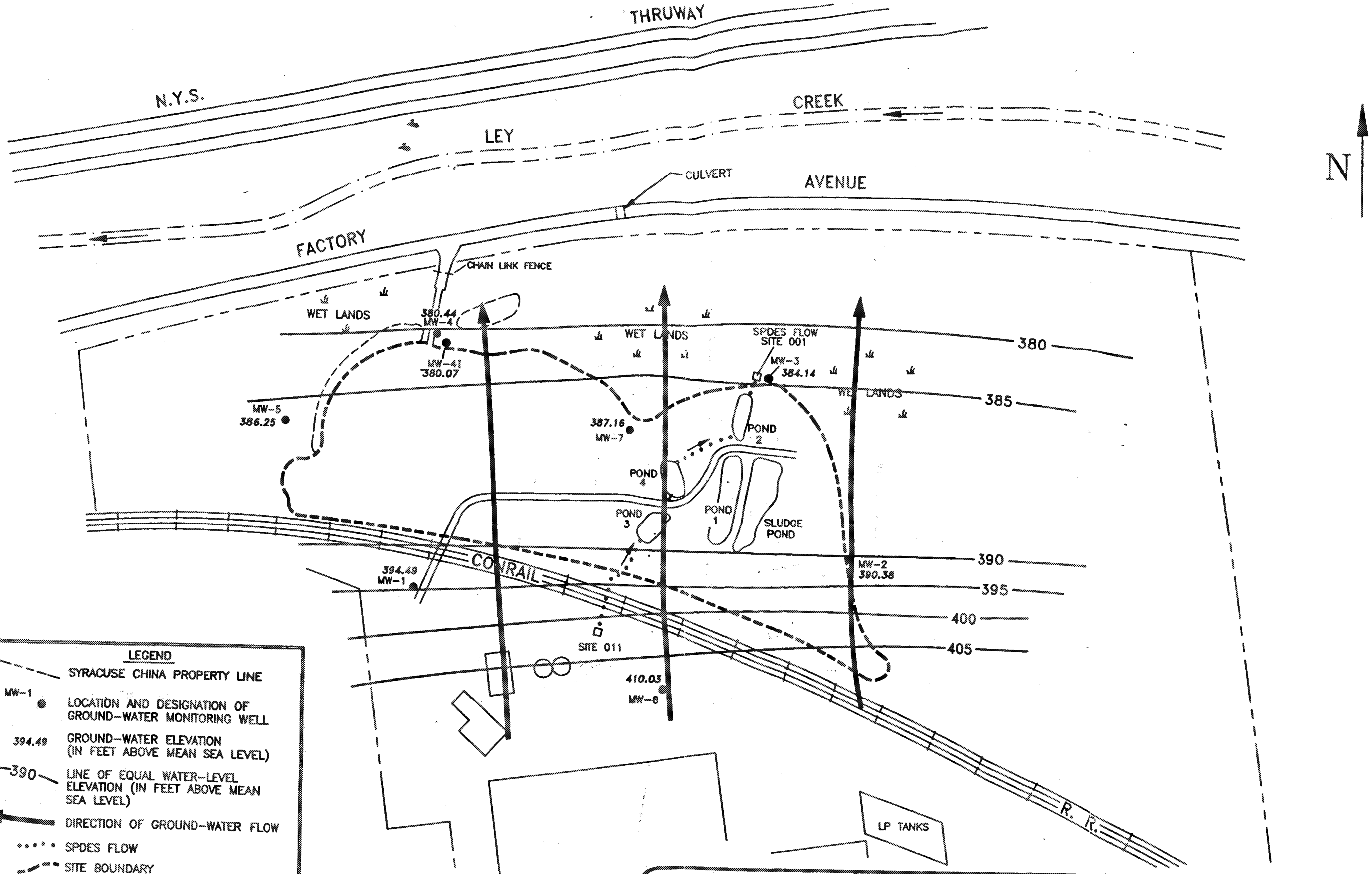

GERAGHTY & MILLER, INC.
Environmental Services

WATER-LEVEL ELEVATIONS, JANUARY 5, 1995
SYRACUSE CHINA SITE, SYRACUSE CHINA COMPANY,
SYRACUSE, NEW YORK

FIGURE
5

DATE: APRIL 1995 | PRJCT NO.: AYD146007 | FILE NO.: - | DRAWING: G1263 | CHECKED: B. GRAY | APPROVED: B. GRAY | DRAFTER: TAD/FJF

ED_006185_00000992-00088

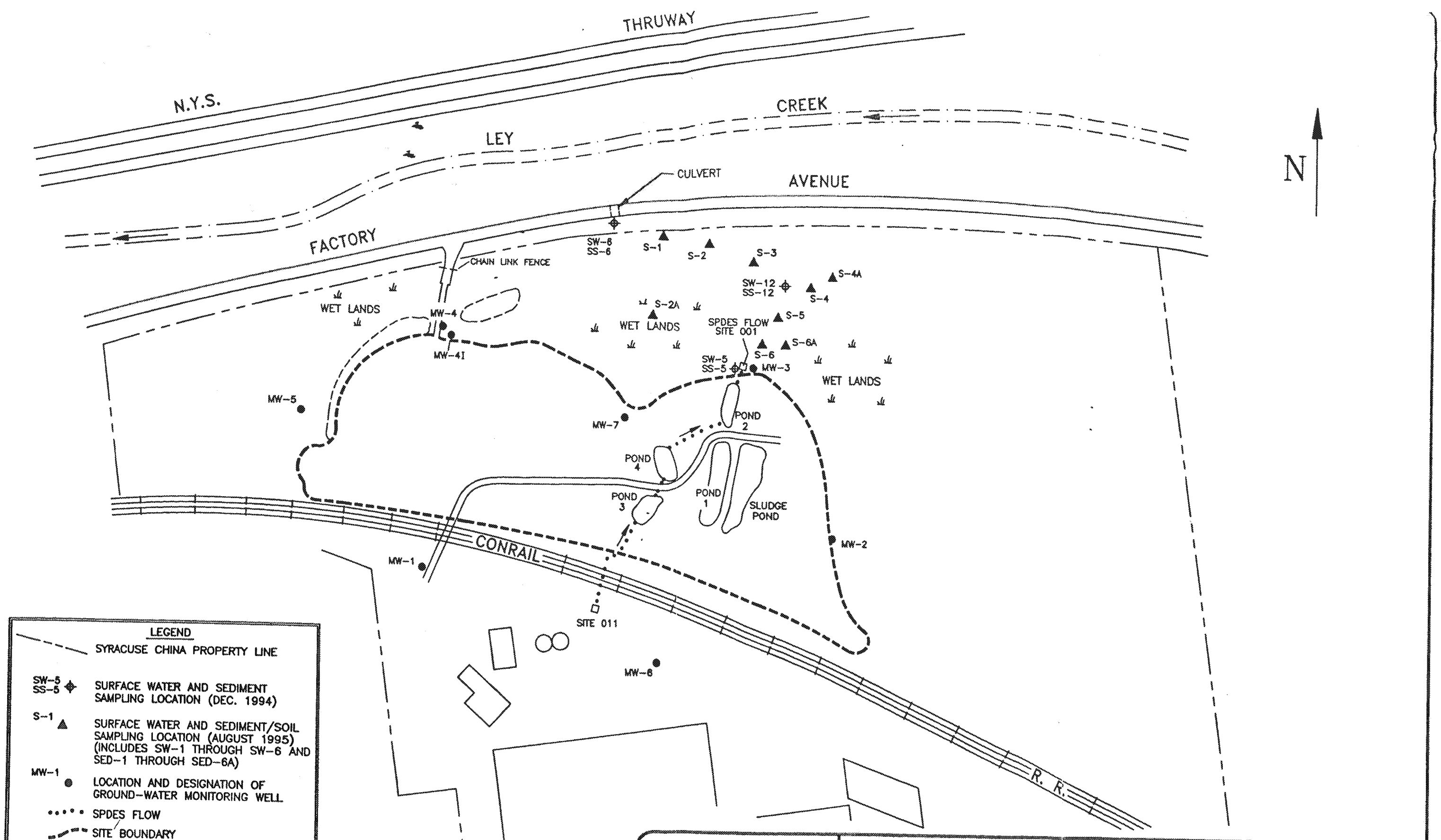

GERAGHTY & MILLER, INC.
Environmental Services

SURFACE WATER AND SEDIMENT/SOIL SAMPLING LOCATIONS
AUGUST 1995
SYRACUSE CHINA SITE, SYRACUSE CHINA COMPANY,
SYRACUSE, NEW YORK

FIGURE
7

DRAFTER: TAD\FJF | APPROVED: B. GRAY | CHECKED: B. GRAY | DRAWING: G126B | FILE NO.: - | PRJCT NO.: AY0146007 | DWG DATE: NOV. 1995

ED_006185_00000992-00089

APPENDIX A

SOIL BORING AND WELL CONSTRUCTION LOGS

ED_006185_00000992-00090

SAMPLE/CORE LOG

Boring/Well: PMW-11 Project No.: AY0146.002 Page 1 of 1

Site Location: Syracuse China Landfill Drilling Started: 11/29/94 Drilling Completed: 11/29/94

Total Depth Drilled: 34 feet Hole Diameter: 6 inches Type of Sample/Coring Device: Split-Spoon Sampler/Shelby Tube

Length and Diameter of Coring Device: 24" Split-Spoon/2-inch inside diameter Sampling Interval: 2 feet

Land-Surface Elevation: 411.53 feet ☐ Surveyed ☒ Estimated Datum: Mean sea level

Drilling Fluid Used: None Drilling Method: 4.25-inch Hollow-Stem Auger

Drilling Contractor: Parratt-Wolff Driller: G. Lansing Helper: K. White

Prepared By: J. Gardner Hammer Weight: 140 Hammer Drop: 30 inches

Sample/Core Depth (feet below land surface From	To	Core Recovery (feet)	Time/Hydraulic Pressure or Blows per 6 inches	OVM Field Cuttings	OVM Sampling	Sample/Core Description
0	2	10"	3-5, 4-4	0.00	0.00	Light brown Silt, little fine to medium sand, trace fine gravel, moist, medium
						compact, organics top 2"
2	4	20"	3-5, 5-5		0.00	Light brown-tan Silt, some fine sand, cinders, moist, medium compact-soft.
4	6	22"	Woh-1, 2-5	0.00	0.00	Tan silty fine Sand, moist, soft
6	8	20"	6-7, 6-5		<1	Tan silty fine Sand, moist, soft wet
8	10	24"	3-5, 5-6		<1	Tan silty fine Sand, moist, soft, wet.
10	12	18"	7-9, 5-5		<1	Tan silty Sand, little fine to medium gravel, soft, moist-wet.
12	14	11"	3-4, 3-6	0.00	0.00	Tan silty Sand, little fine to medium gravel, soft, moist-wet.
14	16	22"	6-8, 9-6		0.00	Tan silty fine Sand, moist-wet, soft
16	18	24"	12-14, 13-19			Tan silty fine Sand, moist-wet, soft
18	20	24"	10-13, 19-25		0.00	Tan silty fine to medium Sand, moist-wet, medium compact
20	22	20"	14-18, 26-32	0.00	0.00	Tan silty fine to medium Sand, moist-wet, more compact.
22	24	22"	22-30, 41-60		0.00	Tan silty fine to medium Sand, moist-wet, more compact.
24	26	24"	23-22, 20-45		0.00	Tan silty fine to medium Sand, moist-wet, more compact.
26	28	18"	22-32, 43-47		0.00	Tan Silt and Sand, moist-wet, medium compact.
28	30	20"	22-25, 41-60		0.00	Tan-brown, silty fine to medium Sand, moist, medium compact.
30	32	18"	12-24, 21-32		0.00	Top 14", Tan-brown silty fine Sand, moist, medium compact. Bottom 4"; fine to
						medium to coarse Sand, little silt, trace fine gravel, moist-wet, medium compact.
32	34	18"	39-33, 30-50/4	0.00	0.00	Red/green Silt, some fine to medium to coarse sand, little fine gravel, moist-
						dry very compact (till-like).
34	36			0.00		Shelby tube attempted - No sample recovered.
36	38		50/3	0.00	0.00	Red Silt, little fine sand above weathered red fine grained shale.

SAMPLE/CORE LOG

Boring/Well: PMW-31 Project No.: AY0146.002 Page 1 of 2

Site Location: Syracuse China Landfill Drilling Started: 11/30/94 Drilling Completed: 11/30/94

Total Depth Drilled: 30 feet Hole Diameter: 6 inches Type of Sample/Coring Device: Split-Spoon Sampler

Length and Diameter of Coring Device: 24" Split-Spoon 2-inch inside diameter Sampling Interval: 2 feet

Land-Surface Elevation: 384 feet ☐ Surveyed ☒ Estimated Datum: Mean sea level

Drilling Fluid Used: None Drilling Method: 4.25" Hollow-Stem Auger

Drilling Contractor: Parratt-Wolff Driller: G. Lansing Helper: K. White

Prepared By: J. Gardner Hammer Weight: 140 Hammer Drop: 30 inches

Sample/Core Depth (feet below land surface) From	To	Core Recovery (feet)	Time/Hydraulic Pressure or Blows per 6 inches	OVM Field Cuttings	OVM Sampling	Sample/Core Description
0	2	1"	1-2, 2-1		0.00	China scrap, wood fragments
2	4	3"	3-1, 1-3		0.00	Organics, wood chips, black silt, little fine sand, moist, soft
4	6	4"	5-3, 6-4		0.00	Light brown-tan Silt, little fine sand, china scrap, loose, wet
6	8	8"	Wob-1.5', 2	0.00	0.00	Light brown Silt, little clay, trace fine sand, soft, moist-wet
8	10	10"	3-3, 3-6		0.00	Top 8" light brown Silt, little clay, trace fine sand, soft, moist-wet. Above 2";
						red/brown Silt, some fine to medium to coarse sand, little clay, moist, very
						compact (Till-like)
10	12	10"	8-7, 7-8		0.00	Red/brown Silt, little fine to medium to coarse sand, little clay, moist, medium
						compact (Till-like)
12	14	12"	16-21, 25-29	0.00	0.00	Red/brown Silt, little fine to medium to coarse sand, little clay, moist, more
						compact (Till-like)
14	16	18"	12-15, 12-16		0.00	Top 16" red/brown Silt, little fine to medium to coarse sand, little clay, moist,
						very compact. Bottom 2" borwn-gray silty fine to medium Sand, moist, loose.
16	18	20"	9-8, 13-20		0.00	Brown/gray fine to medium Sand, little silt, moist, compact.
18	20	24"	21-22, 57-89	0.00	0.00	Brown/gray fine to medium Sand, little silt, moist, very compact.
20	22	22"	12-14, 34-56		0.00	Very fine silty Sand, moist, very compact.
22	24.5	20"	38-45, 80		0.00	Brown silty fine to medium Sand, trace fine gravel, moist, very compact.
24	26	10"	30-38, 24-27		0.00	Red-brown silty fine to medium to coarse Sand and Gravel, moist, very compact
						(Till-like)
26	28	8"	29-27, 84		0.00	Silty Sand and Gravel,moist, very compact above red Silt, some fine to medium
						sand, little gravel, moist, very compact (Till-like).
28	29	6"	36-70		17.0	Red Silt, some fine to medium to coarse sand, little fine to medium gravel, moist,
						very compact (Till-like).

SAMPLE/CORE LOG (Cont.d)

Boring/Well PMW-31

Prepared by J. Gardner

Sample/Core Depth (feet below land surface) From	To	Core Recovery (feet)	Time/Hydraulic Pressure or Blows per 6 inches	OVM Field Cuttings	OVM Sampling	Sample/Core Description
30	32	20"	38-69			Top 15" red Silt, some fine to medium to coarse sand, little fine to medium gravel,
						moist, very compact (Till-Like). Bottom 5", Green weathered shale - Artesian
						Water flowing up through augers. Artesian flowing at about 50 gpm.
						12/1/94 Artesian flowing at about 20 gpm. Grouted with cement plug 12/1/94
						No monitoring well installed.

SAMPLE/CORE LOG

Boring/Well MW-4I Project No. AY0146.002 Page 1 of 1

Site Location Syracuse China Landfill Drilling Started 11/29/94 Drilling Completed 11/30/94

Total Depth Drilled 18 feet Hole Diameter 6 inches Type of Sample/ Coring Device Split-Spoon Sampler

Length and Diameter of Coring Device 24" Split-Spoon/2-inch inside diameter Sampling Interval 2 feet

Land-Surface Elevation 383.91 feet [X] Surveyed [ ] Estimated Datum Mean sea level

Drilling Fluid Used None Drilling Method 4.25" Hollow-Stem Auger

Drilling Contractor Parratt-Wolff Driller G. Lansing Helper K. White

Prepared By J. Gardner Hammer Weight 140 Hammer Drop 30 inches

Sample/Core Depth (feet below land surface From	To	Core Recovery (feet)	Time/Hydraulic Pressure or Blows per 6 Inches	OVM Field Cuttings	OVM Sampling	Sample/Core Description
0	2	10"	W-2, 2-3	0.00	0.00	Top 4", Dark brown Silt, some fine to medium sand, trace fine gravel, moist,
						compact, organics. Bottom 6", China scrap-fragments
2	4	16"	4-6, 3-3		0.00	Dark brown Silt, China-scrap fragments, (fill). Bottom 3"; Dark black Silt, some
						fine sand, moist, soft.
4	6	18"	WOH-1.5', 3	0.00	0.00	Light brown Silt, little fine sand, little clay, moist-wet, soft.
6	8	20"	2-1, 2-1		0.00	Light brown Silt, little fine sand, little clay, moist-wet, soft
8	10	12"	2-2, 2-2		0.00	Light brown Silt, little fine sand, little clay, wet, soft.
10	12	12"	1-4, 7-12		0.00	Light brown-red Silt, some fine to medium to coarse sand, little fine to medium
						gravel, moist, compact (Till-like)
12	13	10"	31-54	0.00	0.00	Light brown-red Silt, some fine to medium to coarse sand, little fine to medium
						gravel, moist, compact (Till-like).
14	15.5	10"	30-33, 57		0.00	Light brown-red Silt, some fine to medium to coarse sand, little fine gravel,
						(various lithologies) moist, very compact. (Till-like).
16	18	12"	48-52, 57-51	0.00	0.00	Light brown-red Silt, some fine to medium to coarse sand, little fine gravel,
						(various lithologies) moist, very compact. (Till-like).
18	20	12"	26-31, 52-38		0.00	Light brown-red Silt, some fine to medium to coarse sand, little fine gravel,
						(various lithologies) moist, very compact. (Till-like). Sample collected for
						Hydraulic Conductivity testing.

SAMPLE/CORE LOG

Boring/Well: MW-6 Project No.: AY0146.002 Page 1 of 1

Site Location: Syracuse China Landfill Drilling Started: 11/28/94 Drilling Completed: 11/28/94

Total Depth Drilled: 16 feet Hole Diameter: 6 inches Type of Sample/Coring Device: Split-Spoon Sampler

Length and Diameter of Coring Device: 24" Split-Spoon/2-inch inside diameter Sampling Interval: 2 feet

Land-Surface Elevation: 413.14 feet [X] Surveyed [ ] Estimated Datum: Mean sea level

Drilling Fluid Used: None Drilling Method: 4.25" Hollow-Stem Auger

Drilling Contractor: Parratt-Wolff Driller: G. Lansing Helper: K. White

Prepared By: J. Gardner Hammer Weight: 140 Hammer Drop: 30 inches

Sample/Core Depth (feet below land surface) From	To	Core Recovery (feet)	Time/Hydraulic Pressure or Blows per 6 inches	OVM Field Cuttings	OVM Sampling	Sample/Core Description
0	2	10"	3-4, 1-1	7.0	0.00	Dark brown-black Silt, little fine to medium sand, little fine gravel, moist, loose-
				(background)		medium compact.
2	4	15"	2-5, 4-3	7.0	<1	Top 6" dark brown-black Silt, little fine to medium sand, little fine gravel, moist,
						loose-medium compact. Above, tan-orange Silt, little fine to medium to coarse
						sand, moist, medium comapct, non-stratified.
4	6	14"	10-11, 12-15		<1	Tan-orange Silt, little fine to medium to coarse sand, medium compact,
						wet, non-stratified.
6	8	17"	12-15, 19-21		0.00	Tan-orange silty Sand, trace fine gravel, moist-wet, medium compact.
8	10	20"	6-13, 19-24		<1	Tan-orange silty Sand, trace fine gravel, moist-wet, medium compact.
10	12	12"	9-12, 29-33		<1	Top 4" Tan-orange, silty Sand, trace fine gravel, moist-wet, medium compact.
						Bottom 8" becoming more compact, less moist. (Till-like)
12	14	12"	30-28, 35-41	7.0	<1	Light brown-orange Silt, some fine to medium to coarse gravel, little fine to
						medium sand, compact, unstratified, moist.
14	16	20"	20-20, 32-35		<1	Light brown-orange Silt, some fine to medium to coarse gravel, little fine to
						medium sand, compact, unstratified, moist.
16	17.5		30, 32, 75		<1	Light brown-orange Silt, some fine to medium to coarse gravel, little fine to
						medium sand, compact, unstratified, moist.

SAMPLE/CORE LOG

Boring/Well: MW-7 Project No.: AY0146.002 Page 1 of 1

Site Location: Syracuse China Landfill Drilling Started: 12/1/94 Drilling Completed: 12/1/94

Total Depth Drilled: 14 feet Hole Diameter: 6 inches Type of Sample/Coring Device: Split-Spoon Sampler

Length and Diameter of Coring Device: 24" Split-Spoon/2-inch inside diameter Sampling Interval: 2 feet

Land-Surface Elevation: 393.21 feet [X] Surveyed [ ] Estimated Datum: Mean sea level

Drilling Fluid Used: None Drilling Method: 4.25" Hollow-Stem Auger

Drilling Contractor: Parratt-Wolff Driller: G. Lansing Helper: K. White

Prepared By: J. Gardner Hammer Weight: 140 Hammer Drop: 30 inches

Sample/Core Depth (feet below land surface) From	To	Core Recovery (feet)	Time/Hydraulic Pressure or Blows per 6 Inches	OVM Field Cuttings	OVM Sampling	Sample/Core Description
0	2	0.0	3-2, 1-1			China scrap
2	4	5"	2-2, 1-1	0.00	0.00	Light brown Silt, little fine sand, little fine to medium gravel, moist, soft, some
						china scrap
4	6	8"	W-2, 2-3	0.00	0.00	Light brown Silt, little fine sand, little fine to medium gravel, moist, soft, some
						china scrap.
6	8	24"	3-1,1-1		0.00	Brown clayey Silt, trace fine sand, trace fine gravel, moist-wet, soft to stiff
						(bottom 6" more clayey)
8	10	0.0	WOH-1.5', 2	0.00	--	No recovery, wash and scrap material
10	12	24"	2-1, 1-2		0.00	Brown-gray clayey Silt, trace fine sand, wet, soft.
12	14	15"	8-9, 8-8		1.1	Brown-gray silty fine to medium Sand, some gray silt, fine laminations, moist-wet,
						medium compact.
14	16	12"	19-22, 70	0.00	1.1	Top 8" Brown-gray silty fine to medium Sand, some gray silt, fine laminations, moist-
						wet, medium compact. Bottom 4", Red-brown Silt, some fine sand, little fine gravel,
						moist, compact (Till-like).

SAMPLE/CORE LOG

Boring/Well: SB-1 Project No.: AY0146.002 Page 1 of 1

Site Location: Syracuse China Landfill Drilling Started: 12/5/94 Drilling Completed: 12/5/94

Total Depth Drilled: 20 feet Hole Diameter: 6 inches Type of Sample/Coring Device: Split-Spoon Sampler

Length and Diameter of Coring Device: 24" Split-Spoon/2-inch inside diameter Sampling Interval: 2 feet

Land-Surface Elevation: _____ feet ☐ Surveyed ☐ Estimated Datum: _____

Drilling Fluid Used: None Drilling Method: 3.25" Hollow-Stem Auger

Drilling Contractor: Parratt-Wolff Driller: G. Lansing Helper: K. White

Prepared By: J. Gardner Hammer Weight: 140 Hammer Drop: 30 inches

Sample/Core Depth (feet below land surface) From	To	Core Recovery (feet)	Time/Hydraulic Pressure or Blows per 6 inches	LEL Drill Cuttings	OVM Sampling	Sample/Core Description
0	2	8"	2-3, 3-3	0.00	0.00	White china scrap, gypsum.
2	4	22"	3-4, 6-5	0.00	0.00	Pink-tan-brown decomposed gypsum trace silt, fragments
4	6	5"	3-2, 2-2	0.00	0.00	China scrap, gypsum, pink fiberglass insulation, loose.
6	8	20"	4-6, 6-3	0.00	0.00	Gypsum, fiberglass insulation, cinders, refractory scrap.
8	10	20"	3-5, 4-4	0.00	0.00	Gypsum, fiberglass insulation, cinders, refractory scrap, wood fragments,
						black clayey material (odor)
10	12	15"	8-3, 3-3	0.00	0.00	China scrap, gypsum, insulation.
12	14	6"			0.6	China scrap, gypsum, insulation.
14	16	15"	1-2, 4-4	0.00	0.00	Top 2" gypsum, china scrap Bottom 13" brown silt, little fine to medium sand,
						moist, medium compact.
16	18	24"	8-6, 7-5	0.00	0.4	Brown-gray clayey silt, trace fine sand, moist, wet, medium compact.
18	20	24"	4-5, 4-3	0.00	0.6	Brown-gray clayey silt, trace fine sand, moist, wet, medium compact (more
						clayey, wet).

SAMPLE/CORE LOG

Boring/Well SB-2 Project No. AY0146.002 Page 1 of 1

Site Location Syracuse China Landfill Drilling Started 12/5/94 Drilling Completed 12/6/94

Total Depth Drilled 30 feet Hole Diameter 6 inches Type of Sample/Coring Device Split-Spoon Sampler

Length and Diameter of Coring Device 24" Split-Spoon 2-inch inside diameter Sampling Interval 2 feet

Land-Surface Elevation _____ feet ☐ Surveyed ☐ Estimated Datum _____

Drilling Fluid Used None Drilling Method 3.25" Hollow-Stem Auger

Drilling Contractor Parratt-Wolff Driller G. Lansing Helper K. White

Prepared By J. Gardner Hammer Weight 140 Hammer Drop 30 inches

Sample/Core Depth (feet below land surface) From	To	Core Recovery (feet)	Time/Hydraulic Pressure or Blows per 6 inches	LEL Drill Cuttings	OVM Sampling	Sample/Core Description
0	2	3"	1-1, 2-3	0.0	0.0	China scrap, refractory scrap
2	4	20"	4-4,5-5	0.0	0.0	China scrap, gypsum, refractory scrap
4	6	18"	6-7, 7-5	0.0	0.0	China scrap, gypsum, refractory scrap
6	8	7"	2-3, 2-2	0.0	0.0	China scrap, gypsum, refractory scrap
8	10	8"	4-1, 2-3	0.0	0.0	China scrap, gypsum, refractory scrap
10	12	6"	2-1, 2-2	0.0	0.0	China scrap, gypsum, refractory scrap
12	14	4"	2-1, 1-6	0.0	0.0	Top 2" China scrap, gypsum, refractory scrap Bottom 2" brown silt, little fine
						sand, moist-wet, soft.
14	16	18"	6-1, 7-4	0.0	0.0	Brown-red Silt, little fine to medium sand, little medium to coarse gravel,
						wet, moist, soft.
16	18	0.0	50-50/3	0.0	--	Gravel fragment in nose of spoon
18	20	16"	4-3, 2-2	0.0	0.0	Top 8" Brown-red Silt, little fine to medium sand, little medium to coarse gravel,
						wet, moist, soft. Bottom 8": china scrap, gypsum, refractory scrap.
20	22	3"	2-3, 2-2	0.0	0.0	Silt, china scrap.
22	24	8"	2-2, 3-3	0.0	0.0	China scrap, silt, refractory scrap, gypsum.
24	26	8"	4-3, 2-2	0.0	0.0	China scrap, silt, refractory scrap, gypsum.
26	28	0.0	1-2, 7-8	0.0	--	Wet, china scrap fragments
28	30	2"	3-4, 5-6	0.0	0.0	Brown silty fine to medium sand, medium compact, moist.

SAMPLE/CORE LOG

Boring/Well SB-3 Project No. AY0146.002 Page 1 of 1

Site Location Syracuse China Landfill Drilling Started 12/5/94 Drilling Completed 12/5/94

Total Depth Drilled 24 feet Hole Diameter 6 inches Type of Sample/ Coring Device Split-Spoon Sampler

Length and Diameter of Coring Device 24" Split-Spoon/2-inch inside diameter Sampling Interval 2 feet

Land-Surface Elevation _____ feet ☐ Surveyed ☐ Estimated Datum _____

Drilling Fluid Used None Drilling Method 3.25" Hollow-Stem Auger

Drilling Contractor Parratt-Wolff Driller G. Lansing Helper K. White

Prepared By J. Gardner Hammer Weight 140 Hammer Drop 30 inches

Sample/Core Depth (feet below land surface) From	To	Core Recovery (feet)	Time/Hydraulic Pressure or Blows per 6 inches	LEL Drill Cuttings	OVM Sampling	Sample/Core Description
0	2	4"	3-4, 6-8	0.00	0.00	White china scrap, gypsum.
2	4	12"	4-4, 7-7	0.00	0.00	White china scrap, wet soft gypsum.
4	6	22"	6-4, 4-3	0.00	0.00	White china scrap, wet soft gypsum, refractory scrap.
6	8	10"	6-6, 8-9	0.00	0.00	China scrap, little gypsum, above 4" brown Silt, some fine to medium to coarse
						sand, china fragments incorporated in silt, medium compact.
8	10	20"	8-7, 4-4	0.00	0.00	White-tan china scrap, brown silt, gypsum.
10	12	6"	2-2, 2-2	0.00	0.00	Gypsum, black organic fragments (wood), refractory fragments.
12	14	5"	2-2, 3-3	0.00	0.00	Gypsum, black organic fragments (wood), refractory fragments.
14	16	10"	1-2, 1-2	0.00	0.00	China scrap, gypsum, black organics.
16	18		3-4, 4-5	0.00	0.00	Wood fragments, china fragments.
18	20	5"	3-2, 3-3	0.00	0.00	White-gray gypsum, china scrap, wood fragments.
20	22	18"	1-2, 2-1	0.00	0.00	China scrap (painted), gypsum, black organic silt, fabric, refractory pans (wet at 21')
22	24	20"	9-13, 18-17	0.00	0.00	Top 1" china fragments, Bottom 19" red-brown Silt, some fine to medium to
						coarse sand, trace fine gravel, compact.

SAMPLE/CORE LOG

Boring/Well: SB-4 Project No.: AY0146.002 Page 1 of 1

Site Location: Syracuse China Landfill Drilling Started: 12/2/94 Drilling Completed: 12/2/94

Total Depth Drilled: 8 feet Hole Diameter: 2 inches Type of Sample/Coring Device: Split-Spoon Sampler

Length and Diameter of Coring Device: 24" Split-Spoon/2-inch inside diameter Sampling Interval: 2 feet

Land-Surface Elevation: _____ feet ☐ Surveyed ☐ Estimated Datum: _____

Drilling Fluid Used: None Drilling Method: 4.25-inch Hollow-Stem Auger

Drilling Contractor: Parratt-Wolff Driller: G. Lansing Helper: D. Waters

Prepared By: J. Gardner Hammer Weight: 140 Hammer Drop: 30 inches

Sample/Core Depth (feet below land surface) From	To	Core Recovery (feet)	Time/Hydraulic Pressure or Blows per 6 inches	LEL Drill Cuttings	OVM Sampling	Sample/Core Description
0	2	16"	2-3, 5-4	0 0	0 0	Top 3" china scrap, above 13" brown Silt, little fine to medium sand, trace fine gravel, china scrap fragments
2	4	8"	2-3, 3-3		0 0	White-gray sludge
4	6	18"	1-1, 2-3	0 0	0 0	Brown silt and fine sand, trace fine gravel, wet, medium compact.
6	8	20"	2-2, 3-5		0 0	Brown silt and fine sand, trace fine gravel, wet, medium compact, little clay

SAMPLE/CORE LOG

Boring/Well SB-5 Project No. AY0146.002 Page 1 of 1

Site Location Syracuse China Landfill Drilling Started 12/2/94 Drilling Completed 12/2/94

Total Depth Drilled 14 feet Hole Diameter 6 inches Type of Sample/Coring Device Split-Spoon Sampler

Length and Diameter of Coring Device 24" Split-Spoon 2-inch inside diameter Sampling Interval 2 feet

Land-Surface Elevation _____ feet ☐ Surveyed ☐ Estimated Datum _____

Drilling Fluid Used None Drilling Method 4.25" Hollow-Stem Auger

Drilling Contractor Parratt-Wolff Driller G. Lansing Helper K. White

Prepared By J. Gardner Hammer Weight 140 Hammer Drop 30 inches

Sample/Core Depth (feet below land surface) From	To	Core Recovery (feet)	Time/Hydraulic Pressure or Blows per 6 Inches	LEL Drill Cuttings	OVM Sampling	Sample/Core Description
0	2	13"	2-3, 3-4	0 0	0 0	Top 4" organics, china scrap, silt above 6" brown sandy Silt, moist, medium
						compact above 3" punk-white sludge and china scrap
2	4	22"	2-1, 1-2	0 0	0 0	Top 18" sludge above 4" black silt, trace of fine sand, moist, loose
4	6	22"	3-3, 4-4		<1	Brown clayey silt, little fine to medium sand, moist, medium compact, little
						china fragments
6	8	20"	3-7, 9-11		1.0	Brown silty fine to medium Sand, little fine gravel, moist-wet, medium compact
8	10	--				NO SAMPLE TAKEN
10	12	18"	1-4, 5-5	0 0	0 0	Brown silty fine to medium Sand, little fine gravel, moist-wet, medium compact
12	14	18"	13-16, 24-24		0 0	Brown silty fine to medium Sand, little fine gravel, moist-wet, medium compact

SAMPLE/CORE LOG

Boring/Well SB-6 Project No. AY0146.002 Page 1 of 1

Site Location Syracuse China Landfill Drilling Started 12/1/94 Drilling Completed 12/1/94

Total Depth Drilled 6 feet Hole Diameter 2 inches Type of Sample/ Coring Device Split-Spoon Sampler

Length and Diameter of Coring Device 24" Split-Spoon/2-inch inside diameter Sampling Interval 2 feet

Land-Surface Elevation _____ feet ☐ Surveyed ☐ Estimated Datum _____

Drilling Fluid Used None Drilling Method Split-Spoon only

Drilling Contractor Parratt-Wolff Driller G. Lansing Helper K. White

Prepared By J. Gardner Hammer Weight 140 Hammer Drop 30 inches

Sample/Core Depth (feet below land surface) From	To	Core Recovery (feet)	Time/Hydraulic Pressure or Blows per 6 Inches	OVM Drill Cuttings	OVM Sampling	Sample/Core Description
0	2	4"	4-6, 2-2	0.00	0.00	China scrap.
2	4	14"	2-1, 1-1	0.00	0.00	Top 3" china scrap, middle 4" sludge, Bottom 7" brown-black silt, trace of fine sand, moist, medium compact

SAMPLE/CORE LOG

Boring/Well SB-7 Project No. AY0146.002 Page 1 of 1

Site Location Syracuse China Landfill Drilling Started 12/1/94 Drilling Completed 12/1/94

Total Depth Drilled 6 feet Hole Diameter 2 inches Type of Sample/ Coring Device Split-Spoon Sampler

Length and Diameter of Coring Device 24" Split-Spoon/2-inch inside diameter Sampling Interval 2 feet

Land-Surface Elevation _____ feet ☐ Surveyed ☐ Estimated Datum _____

Drilling Fluid Used None Drilling Method Split- Spoon Only

Drilling Contractor Parratt-Wolff Driller G. Lansing Helper K. White

Prepared By J. Gardner Hammer Weight 140 Hammer Drop 30 inches

Sample/Core Depth (feet below land surface) From	To	Core Recovery (feet)	Time/Hydraulic Pressure or Blows per 6 Inches	OVM Drill Cuttings	OVM Sampling	Sample/Core Description
0	2	7"	2-2, 2-2	0.00	0.00	China scrap
2	4	0.0	4-6, 9-8	0.00	0.00	China scrap fragment.
4	6	6"	2-1, 3-2	0.00	0.00	Black-brown silt, little fine sand, wet, loose

SAMPLE/CORE LOG

Boring/Well SB-8 Project No. AY0146.002 Page 1 of 1

Site Location Syracuse China Landfill Drilling Started 12/2/94 Drilling Completed 12/2/94

Total Depth Drilled 8 feet Hole Diameter 2 inches Type of Sample/ Coring Device Split-Spoon Sampler

Length and Diameter of Coring Device 24" Split-Spoon/2-inch inside diameter Sampling Interval 2 feet

Land-Surface Elevation _____ feet ☐ Surveyed ☒ Estimated Datum Mean sea level

Drilling Fluid Used None Drilling Method Split Spoon Sampler Only

Drilling Contractor Parratt-Wolff Driller G. Lansing Helper D. Waters

Prepared By J. Gardner Hammer Weight 140 Hammer Drop 30 inches

Sample/Core Depth (feet below land surface) From	To	Core Recovery (feet)	Time/Hydraulic Pressure or Blows per 6 inches	OVM Drill Cuttings	OVM Sampling	Sample/Core Description
0	2	12"	1-2, 2-4	0.00	0.00	Gray-tan clayey sludge.
2	4	20"	3-5, 6-7	0.00	0.00	Gray-tan clayey sludge, little silt
4	6	10"	5-3, 3-5	0.00	0.00	Top 5" gray-tan clayey sludge, little silt. Bottom 5" brown silty fine sand, moist,
						soft, loose
6	8	10"	6-8, 9-5	0.00	0.00	Brown silty fine sand, moist, soft, loose

SAMPLE/CORE LOG

Boring/Well SB-9 Project No. AY0146.002 Page 1 of 1

Site Location Syracuse China Landfill Drilling Started 12/2/94 Drilling Completed 12/2/94

Total Depth Drilled 6 feet Hole Diameter 2 inches Type of Sample/Coring Device Split-Spoon Sampler

Length and Diameter of Coring Device 24" Split-Spoon/2-inch inside diameter Sampling Interval 2 feet

Land-Surface Elevation _____ feet ☐ Surveyed ☐ Estimated Datum Mean sea level

Drilling Fluid Used None Drilling Method Split-Spoon Only

Drilling Contractor Parratt-Wolff Driller G. Lansing Helper K. White

Prepared By J. Gardner Hammer Weight 140 Hammer Drop 30 inches

Sample/Core Depth (feet below land surface) From	To	Core Recovery (feet)	Time/Hydraulic Pressure or Blows per 6 inches	OVM Drill Cuttings	OVM Sampling	Sample/Core Description
0	2	7"	1-3, 5-4	0.00	0.00	Top 1" organics above 4" white-gray sludge above 2" china scrap.
2	4	20"	3-4, 6-8	0.00	0.00	Top 12" sludge and china scrap above 8" brown silty fine sand, moist, compact
4	6	6"	9-7, 4-3	0.00	0.00	Brown silty fine sand, moist, compact

SAMPLE/CORE LOG

Boring/Well: SB-10 Project No.: AY0146.002 Page 1 of 1

Site Location: Syracuse China Landfill Drilling Started: 12/2/94 Drilling Completed: 12/2/94

Total Depth Drilled: Sampled to 12 feet feet Hole Diameter: 6 inches Type of Sample/Coring Device: Split-Spoon Sampler

Length and Diameter of Coring Device: 24" Split-Spoon/2-inch insidediameter Sampling Interval: 2 feet

Land-Surface Elevation: _____ feet ☐ Surveyed ☐ Estimated Datum: _____

Drilling Fluid Used: None Drilling Method: Sampler Only

Drilling Contractor: Parratt-Wolff Driller: G. Lansing Helper: K. White

Prepared By: J. Gardner Hammer Weight: 140 Hammer Drop: 30 inches

Sample/Core Depth (feet below land surface) From	To	Core Recovery (feet)	Time/Hydraulic Pressure or Blows per 6 inches	OVM Drill Cuttings	OVM Sampling	Sample/Core Description
0	2	8"	1-2, 4-4	0.00	0.00	Brown silty sludge (pink-white clayey material)
2	4	10"	2-2, 2-2	0.00	0.00	White-tan sludge
4	6	10"	2-3, 3-2	0.00	0.00	White-gray-brown sludge
6	8	20"	1-1, 2-2	0.00	0.00	White-gray-brown sludge
8	10	18"	1-1, 2-3	0.00	0.00	White-gray-brown sludge
10	12	18"	2-2, 4-9	0.00	0.00	Top 15" sludge, bottom 3" red silt, little fine to medium sand, trace fine gravel,
						medium compact, moist (Till)

SAMPLE/CORE LOG

Boring/Well: SB-11 Project No.: AY0146.002 Page 1 of 1

Site Location: Syracuse China Landfill Drilling Started: 12/2/94 Drilling Completed: 12/2/94

Total Depth Drilled: 12 feet Hole Diameter: 2 inches Type of Sample/Coring Device: Split-Spoon Sampler

Length and Diameter of Coring Device: 24" Split-Spoon/2-inch inside diameter Sampling Interval: 2 feet

Land-Surface Elevation: _____ feet ☐ Surveyed ☐ Estimated Datum: Mean sea level

Drilling Fluid Used: None Drilling Method: Split-Spoon Sampler Only

Drilling Contractor: Parratt-Wolff Driller: G. Lansing Helper: K. White

Prepared By: J. Gardner Hammer Weight: 140 Hammer Drop: 30 inches

Sample/Core Depth (feet below land surface) From	To	Core Recovery (feet)	Time/Hydraulic Pressure or Blows per 6 inches	OVM Drill Cuttings	OVM Sampling	Sample/Core Description
0	2	6"	2-3, 8-8	0	0	White-gray sludge
2	4	3"	2-2, 1-2	0	0	Plant fragments silt-organics
4	6	NR	2-2, 3-3	0	0	No basket in spoon. Wet
6	8	8"	2-2, 2-2	0	0	Brown-gray clayey silt, trace fine sand, sludge
8	10	NR	1-1, 2-2	0	0	No basket, wet spoon
10	12	12"	1-4, 10-14	0	0	Brown Silt and Gravel, trace fine sand, little clay, wet.

WELL CONSTRUCTION LOG
(UNCONSOLIDATED)

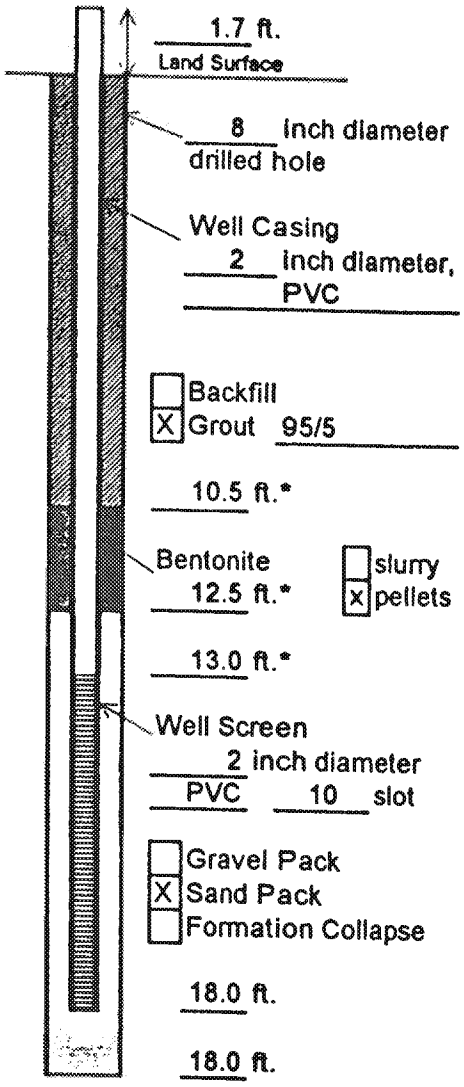

Measuring Point is
Top of Well Casing
Unless Otherwise Noted.
* Depth Below Land Surface

Project AY0146.002 Well MW-4I
Town/City Syracuse
County Onondaga State NY
Permit No.
Land-Surface Elevation and Datum 383.91 feet USGS
[X] Surveyed
[ ] Estimated
Installation Date(s) 11/29/94 and 11/30/94
Drilling Method 4 1/4" Hollow Stem Auger
Drilling Contractor Parratt Wolff
Drilling Fluid None

Development Technique(s) and Date(s)
Bailer, 12/6/94

Fluid Loss During Drilling None gallons
Water Removed During Development 4.5 gallons
Static Depth to Water 15.57 feet below M.P.
Pumping Depth to Water Dry feet below M.P.
Pumping Duration 0.25 hours
Yield gpm Date 12/6/94
Specific Capacity gpm/ft.

Well Purpose Monitoring Well

Remarks Till at 10 feet. Red/brown very turbid water.
Well recharging very slowly.

Prepared by J. Gardner

WELL CONSTRUCTION LOG
(UNCONSOLIDATED)

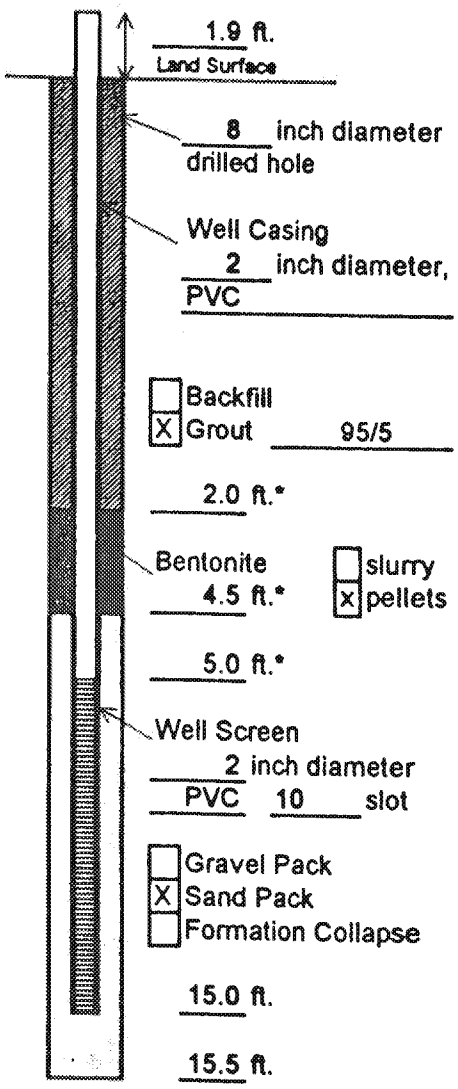

Measuring Point is
Top of Well Casing
Unless Otherwise Noted.
* Depth Below Land Surface

Project AY0146.002 Well MW-6
Town/City Syracuse
County Onondaga State NY
Permit No.
Land-Surface Elevation
and Datum 413.14 feet USGS
[X] Surveyed
[ ] Estimated
Installation Date(s) 11/28/94
Drilling Method 4 1/4" Hollow Stem Auger
Drilling Contractor Parratt Wolff
Drilling Fluid None

Development Technique(s) and Date(s)
1 1/2" Whaler Pump

Fluid Loss During Drilling None gallons
Water Removed During Development 35 gallons
Static Depth to Water 2.24 feet below M.P.
Pumping Depth to Water 14.0 feet below M.P.
Pumping Duration 3 total hours
Yield max 1.5 gpm Date 12/6/94, 12/7/94
Specific Capacity gpm/ft.

Well Purpose Monitoring Well

Remarks Water clearing after approximately 25 gallons pumped from well.

Prepared by J. Gardner

WELL CONSTRUCTION LOG
(UNCONSOLIDATED)

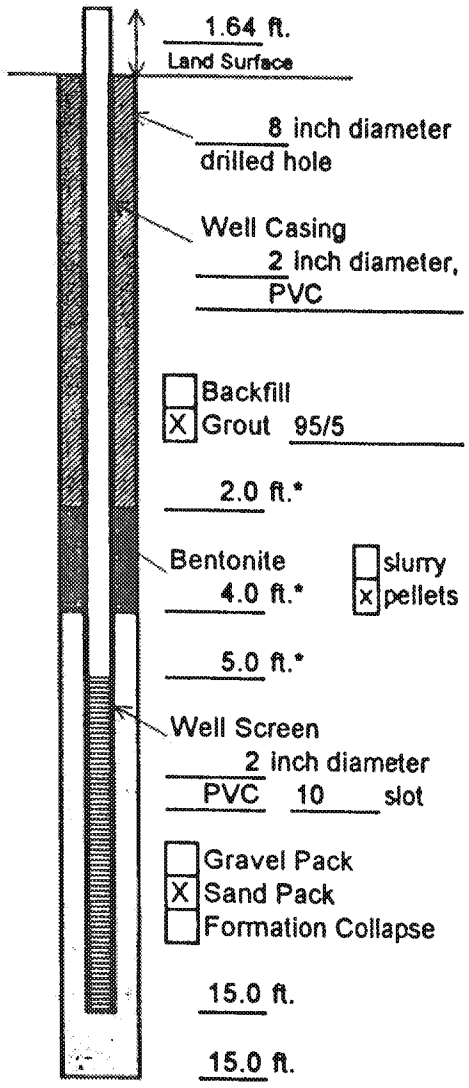

Measuring Point is Top of Well Casing Unless Otherwise Noted.
*** Depth Below Land Surface**

Project AY0146.002 Well MW-7
Town/City Syracuse
County Onondaga State NY
Permit No.
Land-Surface Elevation and Datum 393.21 feet USGS
[X] Surveyed
[ ] Estimated
Installation Date(s) 12/1/94
Drilling Method 4 1/4" Hollow Stem Auger
Drilling Contractor Parratt Wolff
Drilling Fluid None

Development Technique(s) and Date(s)
1 1/2" Whaler Pump

Fluid Loss During Drilling None gallons
Water Removed During Development 23 gallons
Static Depth to Water 4.64 feet below M.P.
Pumping Depth to Water 14.5 feet below M.P.
Pumping Duration 2 hours
Yield max 1.5 gpm Date 12/6/94
Specific Capacity gpm/ft.

Well Purpose Monitoring Well (shallow)

Remarks Water clearing after approximately 20 gallons removed.

Prepared by J. Gardner

APPENDIX B

SURFACE-WATER SAMPLING LOGS

WATER SAMPLING LOG

Project/No. AY0146.013 Page 1 of 1

Site Location Syracuse, New York Date 12/7/94

Site/Well No. PSW-5 Coded/ Replicate No.

Weather 25 degrees, snowing Time Sampling Began 9:20 Time Sampling Completed

EVACUATION DATA

Description of Measuring Point (MP) Grab sample stream

Height of MP Above/Below Land Surface

MP Elevation

Total Sounded Depth of Well Below MP

Water-Level Elevation

Held Depth to Water Below MP

Diameter of Casing

Wet Water Column in Well

Gallons Pumped/Bailed Prior to Sampling

Gallons per Foot

Gallons in Well

Sampling Pump Intake Setting (feet below land surface)

Evacuation Method

SAMPLING DATA/FIELD PARAMETERS

Color Clear Odor None Appearance Temperature 11.1 °C

Other (specific ion; OVA; HNU; etc.) Turbidity < 50

Specific Conductance, umhos/cm 410 pH 5.77

Sampling Method and Material Clean glass jar

Constituents Sampled	Container Description From Lab X or G&M	Preservative
Metal	500 mL plastic	HNO_3
Cyanide	500 mL plastic	NaOH
VOCs	40 mL glass	None

Remarks

Sampling Personnel J. Gardner

WELL CASING VOLUMES

GAL./FT.				
	1-1/4" = 0.06	2" = 0.16	3" 0.37	4" 0.65
	1-1/2" = 0.09	2-1/2" = 0.26	3-1/2" = 0.50	6" = 1.47

WATER SAMPLING LOG

Project/No. AY0146.013

Page 1 of 1

Site Location Syracuse, New York

Date 12/7/94

Site/Well No. PSW-6

Coded/ Replicate No.

Weather 25 degrees, snowing

Time Sampling Began 1:15

Time Sampling Completed

EVACUATION DATA

Description of Measuring Point (MP) Culvert at Factory Ave.

Height of MP Above/Below Land Surface

MP Elevation

Total Sounded Depth of Well Below MP

Water-Level Elevation

Held

Depth to Water Below MP

Diameter of Casing

Wet

Water Column in Well

Gallons Pumped/Bailed Prior to Sampling

Gallons per Foot

Gallons in Well

Sampling Pump Intake Setting (feet below land surface)

Evacuation Method

SAMPLING DATA/FIELD PARAMETERS

Color Clear Odor None Appearance Temperature 5 °C

Other (specific ion; OVA; HNU; etc.) Turbdity < 50

Specific Conductance, umhos/cm 440 pH 5.77

Sampling Method and Material Clean glass jar

Constituents Sampled	Container Description From Lab X or G&M	Preservative
Metal	500 mL plastic	HNO_3
Cyanide	500 mL plastic	NaOH
VOCs	40 mL glass	None

Remarks

Sampling Personnel J. Gardner

WELL CASING VOLUMES

GAL./FT.				
	1-1/4" = 0.06	2" = 0.16	3" = 0.37	4" = 0.65
	1-1/2" = 0.09	2-1/2" = 0.26	3-1/2" = 0.50	6" = 1.47

WATER SAMPLING LOG

Project/No. AY0146.013 Page 1 of 1

Site Location Syracuse, New York Date 12/7/94

Site/Well No. PSW-7 Coded/ Replicate No.

Weather 25 degrees, snowing Time Sampling Began 10:30 Time Sampling Completed

EVACUATION DATA

Description of Measuring Point (MP) Grab pond 1

Height of MP Above/Below Land Surface MP Elevation

Total Sounded Depth of Well Below MP Water Level Elevation

Held Depth to Water Below MP Diameter of Casing

Wet Water Column in Well Gallons Pumped/Bailed Prior to Sampling

Gallons per Foot

Gallons in Well Sampling Pump Intake Setting (feet below land surface)

Evacuation Method

SAMPLING DATA/FIELD PARAMETERS

Color Clear Odor None Appearance -- Temperature 4 °C

Other (specific ion; OVA; HNU; etc.) SC = 345 pH = 5.82

Turbidity < 50

Specific Conductance, umhos/cm 345 pH 5.82

Sampling Method and Material Decon-glass jar

Constituents Sampled	Container Description From Lab X or G&M	Preservative
Metal	500 mL plastic	HNO_3
Cyanide	500 mL plastic	NaOH
VOCs	40 mL glass	None

Remarks

Sampling Personnel J. Gardner

WELL CASING VOLUMES

GAL./FT.				
	1-1/4" = 0.06	2" = 0.16	3" = 0.37	4" = 0.65
	1-1/2" = 0.09	2-1/2" = 0.26	3-1/2" = 0.50	6" = 1.47

WATER SAMPLING LOG

Project/No. AY0146.013

Page 1 of 1

Site Location Syracuse, New York

Date 12/7/94

Site/Well No. PSW-8

Coded/ Replicate No. DUP

Weather 25 degrees, snowing

Time Sampling Began 10:30

Time Sampling Completed

EVACUATION DATA

Description of Measuring Point (MP) Grab - from pond

Height of MP Above/Below Land Surface

MP Elevation

Total Sounded Depth of Well Below MP

Water-Level Elevation

Held

Depth to Water Below MP

Diameter of Casing

Wet

Water Column in Well

Gallons Pumped/Bailed Prior to Sampling

Gallons per Foot

Gallons in Well

Sampling Pump Intake Setting (feet below land surface)

Evacuation Method

SAMPLING DATA/FIELD PARAMETERS

Color Clear Odor None Appearance Temperature 12 °C

Other (specific ion; OVA; HNU; etc.) Turbidity < 50

Specific Conductance, umhos/cm 390 pH 6.09

Sampling Method and Material Clean glass jar

Constituents Sampled	Container Description From Lab X or G&M	Preservative
Metal	500 mL plastic	HNO_3
Cyanide	500 mL plastic	NaOH
VOCs	40 mL glass	None

Remarks

Sampling Personnel J. Gardner

WELL CASING VOLUMES

GAL./FT.				
	1-1.4" = 0.06	2" 0.16	3" = 0.37	4" = 0.65
	1-1.2" = 0.09	2-1.2" = 0.26	3-1/2" = 0.50	6" = 1.47

WATER SAMPLING LOG

Project/No. AY0146.013

Page 1 of 1

Site Location Syracuse, New York

Date 12/7/94

Site/Well No. PSW-9

Coded/ Replicate No.

Weather 25 degrees, snowing

Time Sampling Began 12:30

Time Sampling Completed

EVACUATION DATA

Description of Measuring Point (MP) Grab sample from Pond 3

Height of MP Above/Below Land Surface

MP Elevation

Total Sounded Depth of Well Below MP

Water-Level Elevation

Held

Depth to Water Below MP

Diameter of Casing

Wet

Water Column in Well

Gallons Pumped/Bailed Prior to Sampling

Gallons per Foot

Gallons in Well

Sampling Pump Intake Setting (feet below land surface)

Evacuation Method

SAMPLING DATA/FIELD PARAMETERS

Color Clear Odor None Appearance Temperature 12 °C

Other (specific ion; OVA; HNU; etc.) Turbidity < 50

Specific Conductance, umhos/cm 250 pH 6.1

Sampling Method and Material Clean glass jar

Constituents Sampled	Container Description From Lab X or G&M	Preservative
Metal	500 mL plastic	HNO_3
Cyanide	500 mL plastic	NaOH
VOCs	40 mL glass	None

Remarks

Sampling Personnel J. Gardner

WELL CASING VOLUMES

GAL./FT.				
	1-1/4" = 0.06	2" = 0.16	3" = 0.37	4" = 0.65
	1-1/2" = 0.09	2-1/2" = 0.26	3-1/2" = 0.50	6" = 1.47

WATER SAMPLING LOG

Project/No. AY0146.013

Page 1 of 1

Site Location Syracuse, New York

Date 12/7/94

Site/Well No. PSW-10

Coded/ Replicate No.

Weather 25 degrees, snowing

Time Sampling Began 11:30

Time Sampling Completed

EVACUATION DATA

Description of Measuring Point (MP) Grab pond 4

Height of MP Above/Below Land Surface

MP Elevation

Total Sounded Depth of Well Below MP

Water-Level Elevation

Held

Depth to Water Below MP

Diameter of Casing

Wet

Water Column in Well

Gallons Pumped/Bailed Prior to Sampling

Gallons per Foot

Gallons in Well

Sampling Pump Intake Setting (feet below land surface)

Evacuation Method

SAMPLING DATA/FIELD PARAMETERS

Color Clear Odor None Appearance -- Temperature 12 °C

Other (specific ion; OVA; HNU; etc.)

Specific Conductance, umhos/cm 380 pH 6.16

Sampling Method and Material Clean glass jar

Constituents Sampled	Container Description From Lab X or G&M	Preservative
Metal	500 mL plastic	HNO_3
Cyanide	500 mL plastic	NaOH
VOCs	40 mL glass	None

Remarks

Sampling Personnel J. Gardner

WELL CASING VOLUMES

GAL./FT.				
	1-1/4" = 0.06	2" = 0.16	3" = 0.37	4" = 0.65
	1-1/2" = 0.09	2-1/2" = 0.26	3-1/2" = 0.50	6" = 1.47

WATER SAMPLING LOG

Project/No. AY0146.013 Page 1 of 1

Site Location Syracuse, New York Date 12/7/94

Site/Well No. PSW-12 Coded/ Replicate No.

Weather 25 degrees, snowing Time Sampling Began 2.00 Time Sampling Completed

EVACUATION DATA

Description of Measuring Point (MP) Stream grab sample

Height of MP Above/Below Land Surface MP Elevation

Total Sounded Depth of Well Below MP Water-Level Elevation

Held Depth to Water Below MP Diameter of Casing

Wet Water Column in Well Gallons Pumped/Bailed Prior to Sampling

Gallons per Foot

Gallons in Well Sampling Pump Intake Setting (feet below land surface)

Evacuation Method

SAMPLING DATA/FIELD PARAMETERS

Color Clear Odor None Appearance Temperature 12 °C

Other (specific ion; OVA; HNU; etc.)

Specific Conductance, umhos/cm 380 pH 6.2

Sampling Method and Material Clean glass jar

Constituents Sampled	Container Description From Lab X or G&M	Preservative
Metal	500 mL plastic	HNO_3
Cyanide	500 mL plastic	NaOH
VOCs	40 mL glass	None

Remarks

Sampling Personnel J. Gardner

WELL CASING VOLUMES

GAL./FT.				
	1-1/4" = 0.06	2" = 0.16	3" = 0.37	4" = 0.66
	1-1/2" = 0.09	2-1/2" = 0.26	3-1/2" = 0.50	5" = 1.47

WATER SAMPLING LOG

Project No. AY0146.017

Page 1 of 1

Site Location Syracuse China, Syracuse, New York

Date 8/17/95

Site Well No. SW-1

Coded Replicate No

Weather 90°

Time Sampling Began 3:50

Time Sampling Completed

EVACUATION DATA

Description of Measuring Point (MP) Stream

Height of MP Above/Below Land Surface

MP Elevation

Total Sounded Depth of Well Below MP

Water-Level Elevation

Held

Depth to Water Below MP

Diameter of Casing

Wet

ater Column in Well

Gallons Pumped/Bailed Prior to Sampling

Gallons per Foot

Gallons in Well

Sampling Pump Intake Setting (feet below land surface)

Evacuation Method Clear glass jar lab bottles

SAMPLING DATA/FIELD PARAMETERS

Color Clear Odor None Appearance Clear Temperature 26° C

Other (specific ion; OVA; HNU; etc.)

Turbidity = 7.7 NTUs

Specific Conductance, umhos/cm 675 pH 7.6

Sampling Method and Material

Constituents Sampled	Container Description From Lab X or G&M	Preservative
TAL - Total Inorganics	500 ml plastic	HNO_3
Cyanide	500 ml plastic	NaOH

Remarks

Sampling Personnel J. Gardner L. Westbay

WELL CASING VOLUMES

GAL./FT.				
	1-1/4" = 0.06	2" = 0.16	3" = 0.37	4" = 0.65
	1-1/2" = 0.09	2-1/2" = 0.26	3-1/2" = 0.50	6" = 1.47

WATER SAMPLING LOG

Project/No. AY0146.017

Page 1 of 1

Site Location Syracuse China, Syracuse, New York

Date 8/17/95

Site Well No SW-2

Coded Replicate No

Weather

Time Sampling Began 4:40

Time Sampling Completed 5:00

EVACUATION DATA

Description of Measuring Point (MP) Stream

Height of MP Above Below Land Surface

MP Elevation

Total Sounded Depth of Well Below MP

Water-Level Elevation

Held

Depth to Water Below MP

Diameter of Casing

Wet

ater Column in Well

Gallons Pumped Bailed Prior to Sampling

Gallons per Foot

Gallons in Well

Sampling Pump Intake Setting (feet below land surface)

Evacuation Method

SAMPLING DATA/FIELD PARAMETERS

Color Water Clear Odor Sewage Appearance Clear Temperature 28° C

Other (specific ion; OVA; HNU; etc.)

Turbidity - 8.14

Specific Conductance, umhos cm 400 pH 7.31

Sampling Method and Material

Constituents Sampled	Container Description From Lab X or G&M	Preservative
TAL - Total Inorganics	500 ml plastic	HNO_3
Cyanide	500 ml plastic	NaOH

Remarks

Sampling Personnel J. Gardner L. Westbay

WELL CASING VOLUMES

GAL./FT.				
	1-1/4" = 0.06	2" = 0.16	3" = 0.37	4" = 0.65
	1-1/2" = 0.09	2-1/2" = 0.26	3-1.2" = 0.50	6" = 1.47

WATER SAMPLING LOG

Project/No. AY0146.017 Page 1 of 1

Site Location Syracuse China, Syracuse, New York Date 8/17/95

Site/Well No SW-2A Coded Replicate No.

Weather Clear, 90's Time Sampling Began 5:00 Time Sampling Completed 5:15

EVACUATION DATA

Description of Measuring Point (MP) Stream

Height of MP Above Below Land Surface MP Elevation

Total Sounded Depth of Well Below MP Water-Level Elevation

Held Depth to Water Below MP Diameter of Casing

Wet ater Column in Well Gallons Pumped Bailed Prior to Sampling

Gallons per Foot

Gallons in Well Sampling Pump Intake Setting (feet below land surface)

Evacuation Method

SAMPLING DATA/FIELD PARAMETERS

Color Light tan Odor Sewage Appearance Slightly Turbid Temperature 27° C

Other (specific ion, OVA; HNU; etc.)

Turbidity = 43.8

Specific Conductance, umhos cm 500 pH 7.21

Sampling Method and Material

Constituents Sampled	Container Description From Lab X or G&M	Preservative
Lead	500 ml plastic	HNO_3

Remarks

Sampling Personnel J. Gardner/L. Westbay

WELL CASING VOLUMES

GAL./FT.				
	1-1/4" = 0.06	2" = 0.16	3" = 0.37	4" = 0.65
	1-1/2" = 0.09	2-1/2" = 0.26	3-1/2" = 0.50	6" = 1.47

WATER SAMPLING LOG

Project No. AY0146.017

Page 1 of 1

Site Location Syracuse China, Syracuse, New York

Date 8/17/95

Site Well No SW-3

Coded Replicate No.

Weather 90's

Time Sampling Began 5:20

Time Sampling Completed 5:35

EVACUATION DATA

Description of Measuring Point (MP) Stream

Height of MP Above/Below Land Surface

MP Elevation

Total Sounded Depth of Well Below MP

Water-Level Elevation

Held

Depth to Water Below MP

Diameter of Casing

Wet

ater Column in Well

Gallons Pumped Bailed Prior to Sampling

Gallons per Foot

Gallons in Well

Sampling Pump Intake Setting (feet below land surface)

Evacuation Method

SAMPLING DATA/FIELD PARAMETERS

Color Water Clear Odor None Appearance Clear Temperature 30° C

Other (specific ion; OVA; HNU; etc.)

Turbidity > 50

Specific Conductance, umhos cm 650 pH 7.25

Sampling Method and Material

Constituents Sampled	Container Description From Lab X or G&M	Preservative
TAL - Total Inorganics	500 ml plastic	HNO_3
Cyanide	500 ml plastic	NaOH

Remarks

Sampling Personnel J. Gardner L. Westbay

WELL CASING VOLUMES

GAL./FT.				
	1-1/4" = 0.06	2" = 0.16	3" = 0.37	4" = 0.65
	1-1/2" = 0.09	2-1/2" = 0.26	3-1/2" = 0.50	6" = 1.47

WATER SAMPLING LOG

Project No. AY0146.017

Page 1 of 1

Site Location Syracuse China, Syracuse, New York

Date 8/17/95

Site Well No. SW-4

Coded Replicate No

Weather Sunny, 90's

Time Sampling Began 5:40

Time Sampling Completed 6:00

EVACUATION DATA

Description of Measuring Point (MP) Stream

Height of MP Above Below Land Surface

MP Elevation

Total Sounded Depth of Well Below MP

Water-Level Elevation

Held

Depth to Water Below MP

Diameter of Casing

Wet

ater Column in Well

Gallons Pumped Bailed Prior to Sampling

Gallons per Foot

Gallons in Well

Sampling Pump Intake Setting (feet below land surface)

Evacuation Method

SAMPLING DATA/FIELD PARAMETERS

Color Clear Water Odor None Appearance Clear Temperature 28° C

Other (specific ion; OVA; HNU, etc.)

Turbidity = 38.5

Specific Conductance, umhos/cm 480 pH 7.45

Sampling Method and Material

Constituents Sampled	Container Description From Lab X or G&M	Preservative
TAL - Total Inorganics	500 ml plastic	HNO_3
Cyanide	500 ml plastic	NaOH

Remarks

Sampling Personnel J. Gardner/L. Westbay

WELL CASING VOLUMES

GAL./FT.				
	1-1.4" = 0.06	2" = 0.16	3" = 0.37	4" = 0.65
	1-1/2" = 0.09	2-1/2" = 0.26	3-1/2" = 0.50	6" = 1.47

WATER SAMPLING LOG

Project No. AY0146.01*

Page 1 of 1

Site Location Syracuse China, Syracuse, New York

Date 8/17/95

Site Well No SW-4A

Coded Replicate No.

Weather Sunny, 90's

Time Sampling Began 5:40

Time Sampling Completed 5:50

EVACUATION DATA

Description of Measuring Point (MP) Stream

Height of MP Above Below Land Surface

MP Elevation

Total Sounded Depth of Well Below MP

Water-Level Elevation

Held

Depth to Water Below MP

Diameter of Casing

Wet

ater Column in Well

Gallons Pumped Bailed Prior to Sampling

Gallons per Foot

Gallons in Well

Sampling Pump Intake Setting (feet below land surface)

Evacuation Method

SAMPLING DATA/FIELD PARAMETERS

Color Orange Clear Odor None Appearance Stagnant organic matter, sheen on surface Temperature 22° C

Other (specific ion; OVA, HNU, etc.)

Turbidity = 45.1

Specific Conductance, umhos/cm 570 pH 7.18

Sampling Method and Material

Constituents Sampled	Container Description From Lab X or G&M	Preservative
Lead	500 ml plastic	HNO_3

Remarks

Sampling Personnel J. Gardner/L. Westbay

WELL CASING VOLUMES

GAL./FT.				
	1-1/4" = 0.06	2" = 0.16	3" = 0.37	4" = 0.65
	1-1/2" = 0.09	2-1/2" = 0.26	3-1/2" = 0.50	6" = 1.47

WATER SAMPLING LOG

Project/No. AY0146 017

Page 1 of 1

Site Location Syracuse China, Syracuse, New York

Date 8/17/95

Site Well No. SW-5

Coded Replicate No

Weather 90's

Time Sampling Began 6 20

Time Sampling Completed 6 40

EVACUATION DATA

Description of Measuring Point (MP) Stream

Height of MP Above Below Land Surface

MP Elevation

Total Sounded Depth of Well Below MP

Water-Level Elevation

Held

Depth to Water Below MP

Diameter of Casing

Wet

ater Column in Well

Gallons Pumped Bailed Prior to Sampling

Gallons per Foot

Gallons in Well

Sampling Pump Intake Setting (feet below land surface)

Evacuation Method

SAMPLING DATA/FIELD PARAMETERS

Color Clear Odor None Appearance Clear Temperature 27° C

Other (specific ion; OVA; HNU, etc.)

Turbidity = 13.65

Specific Conductance, umhos/cm 480 pH 7.17

Sampling Method and Material

Constituents Sampled	Container Description From Lab X or G&M	Preservative
TAL - Total Inorganics	500 ml plastic	HNO_3
Cyanide	500 ml plastic	NaOH

Remarks

Sampling Personnel J. Gardner L. Westbay

WELL CASING VOLUMES

GAL./FT.				
	1-1/4" = 0.06	2" = 0.16	3" = 0.37	4" = 0.66
	1-1/2" = 0.09	2-1/2" = 0.26	3-1/2" = 0.50	6" = 1.47

WATER SAMPLING LOG

Project/No. AY0146.017 Page 1 of 1

Site Location Syracuse China, Syracuse, New York Date 8/17/95

Site Well No SW-6 Coded Replicate No

Weather 90's Time Sampling Began 6:45 Time Sampling Completed 7:00

EVACUATION DATA

Description of Measuring Point (MP) Stream

Height of MP Above Below Land Surface MP Elevation

Total Sounded Depth of Well Below MP Water-Level Elevation

Held Depth to Water Below MP Diameter of Casing

Wet ater Column in Well Gallons Pumped Bailed Prior to Sampling

Gallons per Foot

Gallons in Well Sampling Pump Intake Setting (feet below land surface)

Evacuation Method

SAMPLING DATA/FIELD PARAMETERS

Color Water Clear Odor None Appearance Clear Temperature 27° C

Other (specific ion, OVA, HNU, etc.)

Turbidity 10.87

Specific Conductance, umhos/cm 440 pH 7.25

Sampling Method and Material

Constituents Sampled	Container Description From Lab X or G&M	Preservative
TAL - Total Inorganics	500 ml plastic	HNO_3
Cyanide	500 ml plastic	NaOH

Remarks

Sampling Personnel J. Gardner/L. Westbay

WELL CASING VOLUMES

GAL./FT.				
	1-1/4" = 0.06	2" = 0.16	3" = 0.37	4" = 0.65
	1-1/2" = 0.09	2-1/2" 0.26	3-1/2" = 0.50	6" = 1.47

WATER SAMPLING LOG

Project/No. AY0146.017

Page 1 of 1

Site Location Syracuse China, Syracuse, New York

Date 8/17/95

Site/Well No. SW-6A

Coded Replicate No.

Weather 90's

Time Sampling Began 7:00

Time Sampling Completed 7:15

EVACUATION DATA

Description of Measuring Point (MP)

Height of MP Above Below Land Surface

MP Elevation

Total Sounded Depth of Well Below MP

Water-Level Elevation

Held

Depth to Water Below MP

Diameter of Casing

Wet

ater Column in Well

Gallons Pumped Bailed Prior to Sampling

Gallons per Foot

Gallons in Well

Sampling Pump Intake Setting (feet below land surface)

Evacuation Method

SAMPLING DATA/FIELD PARAMETERS

Color

Odor

Appearance

Temperature F C

Other (specific ion, OVA, HNU, etc.)

Specific Conductance, umhos/cm

pH

Sampling Method and Material Disposable Bailer (Teflon); Polypropylene Rope.

Constituents Sampled	Container Description From Lab X or G&M	Preservative
	DRY - NO SAMPLE	

Remarks

Sampling Personnel J. Gardner L. Westbay

WELL CASING VOLUMES

GAL./FT.				
	1-1/4" = 0.06	2" = 0.16	3" = 0.37	4" = 0.65
	1-1/2" = 0.09	2-1/2" = 0.26	3-1/2" = 0.50	6" = 1.47

APPENDIX C

PERMEABILITY TESTING RESULTS

Report Date: January 4, 1995

Test Start Date: December 6, 1994

Measurement of Hydraulic Conductivity
of Saturated Porous Materials
Using a Flexible Wall Permeameter
ASTM D5084

Project No: B-94379 / Project Title: Syracuse China, Syracuse, New York, Project #A40146.005

ST No: --- / Lab ID#: 6302 / Test Sample Location: MW-41

Depth/Lift/Elev.: 18.0'-20.0' / Type of Sample: Undisturbed X Remolded --

Method of Compaction: -- / Percent Compaction: --

Dry Unit Weight (PCF): Maximum: -- Initial: 140.9 / Moisture Content (% of Dry Weight): Optimum: -- Initial: 6.5

Initial Height (cm): 9.25 / Initial Diameter (cm): 3.50 / Initial Gradient: 22.8

Initial Degree of Saturation (B Value)(%): 94 / Permeant Liquid Used: Deaired Deionized Water

Confining Pressure (PSI): 71.0 / Test (head) Pressure (PSI): 68.0 / Tail (back) Pressure (PSI): 65.0

Final Degree Of Saturation (B Value)(%): 96 / Final Dry Unit Weight (PCF): 146.7 / Final Gradient: 23.1

Final Height (cm): 9.15 / Final Diameter (cm): 3.45 / Final Moisture Content (% of Dry Weight): 8.8

Final Four Determinations k (cm/sec)

1.52×10^{-8} 1.44×10^{-8} 1.45×10^{-8} 1.45×10^{-8}

Mean Value of Final Four Consecutive Determinations:

Coefficient of Permeability k (cm/sec): 1.47×10^{-8}

Project Specifications: --

Notes:

Report Date: January 4, 1995

Test Start Date: December 6, 1994

Measurement of Hydraulic Conductivity of Saturated Porous Materials Using a Flexible Wall Permeameter ASTM D5084

Project No: B-94379 / Project Title: Syracuse China, Syracuse, New York, Project #A40146.005

ST No: --- / Lab ID#: 6301 / Test Sample Location: MW-31

Depth/Lift/Elev.: 30.0'-32.0' / Type of Sample: Undisturbed X Remolded --

Method of Compaction: -- / Percent Compaction: --

Dry Unit Weight (PCF): Maximum: -- Initial: 126.8 / Moisture Content (% of Dry Weight): Optimum: -- Initial: 11.7

Initial Height (cm): 10.00 / Initial Diameter (cm): 3.60 / Initial Gradient: 21.1

Initial Degree of Saturation (B Value)(%): 96 / Permeant Liquid Used: Deaired Deionized Water

Confining Pressure (PSI): 71.0 / Test (head) Pressure (PSI): 68.0 / Tail (back) Pressure (PSI): 65.0

Final Degree Of Saturation (B Value)(%): 94 / Final Dry Unit Weight (PCF): 123.0 / Final Gradient: 21.0

Final Height (cm): 10.03 / Final Diameter (cm): 3.65 / Final Moisture Content (% of Dry Weight): 13.3

Final Four Determinations k (cm/sec)

9.56×10^{-9}	9.57×10^{-9}	9.59×10^{-9}	9.61×10^{-9}

Mean Value of Final Four Consecutive Determinations:

Coefficient of Permeability k (cm/sec): 9.58×10^{-9}

Project Specifications: --

Notes:

Report Date: January 4, 1995

Test Start Date December 6, 1994

Measurement of Hydraulic Conductivity
of Saturated Porous Materials
Using a Flexible Wall Permeameter
ASTM D5084

Project No: B-94379 / Project Title: Syracuse China, Syracuse, New York, Project #A40146.005

ST No: --- / Lab ID#: 6302 / Test Sample Location: MW-41

Depth/Lift/Elev.: 18.0'-20.0' / Type of Sample: Undisturbed X Remolded --

Method of Compaction: -- / Percent Compaction: --

Dry Unit Weight (PCF): Maximum: -- Initial: 140.9 / Moisture Content (% of Dry Weight): Optimum: -- Initial: 6.5

Initial Height (cm): 9.25 / Initial Diameter (cm): 3.50 / Initial Gradient: 22.8

Initial Degree of Saturation (B Value)(%): 94 / Permeant Liquid Used: Deaired Deionized Water

Confining Pressure (PSI): 71.0 / Test (head) Pressure (PSI): 68.0 / Tail (back) Pressure (PSI): 65.0

Final Degree Of Saturation (B Value)(%): 96 / Final Dry Unit Weight (PCF): 146.7 / Final Gradient: 23.1

Final Height (cm): 9.15 / Final Diameter (cm): 3.45 / Final Moisture Content (% of Dry Weight): 8.8

Final Four Determinations k (cm/sec)

1.52×10^{-8} 1.44×10^{-8} 1.45×10^{-8} 1.45×10^{-8}

Mean Value of Final Four Consecutive Determinations:

Coefficient of Permeability k (cm/sec): 1.47×10^{-8}

Project Specifications: --

Notes:

Report Date: January 4, 1995

Test Start Date: December 6, 1994

Measurement of Hydraulic Conductivity
of Saturated Porous Materials
Using a Flexible Wall Permeameter
ASTM D5084

Project No: B-94379 / Project Title: Syracuse China, Syracuse, New York, Project #A40146.005

ST No: --- / Lab ID#: 6301 / Test Sample Location: MW-3I

Depth/Lift/Elev.: 30.0'-32.0' / Type of Sample: Undisturbed X Remolded --

Method of Compaction: -- / Percent Compaction: --

Dry Unit Weight (PCF): Maximum: -- Initial: 126.8 / Moisture Content (% of Dry Weight): Optimum: -- Initial: 11.7

Initial Height (cm): 10.00 / Initial Diameter (cm): 3.60 / Initial Gradient: 21.1

Initial Degree of Saturation (B Value)(%): 96 / Permeant Liquid Used: Deaired Deionized Water

Confining Pressure (PSI): 71.0 / Test (head) Pressure (PSI): 68.0 / Tail (back) Pressure (PSI): 65.0

Final Degree Of Saturation (B Value)(%): 94 / Final Dry Unit Weight (PCF): 123.0 / Final Gradient: 21.0

Final Height (cm): 10.03 / Final Diameter (cm): 3.65 / Final Moisture Content (% of Dry Weight): 13.3

Final Four Determinations k (cm/sec)

9.56×10^{-9} 9.57×10^{-9} 9.59×10^{-9} 9.61×10^{-9}

Mean Value of Final Four Consecutive Determinations:

Coefficient of Permeability k (cm/sec): 9.58×10^{-9}

Project Specifications: --

Notes:

APPENDIX D

GROUNDWATER SAMPLING LOGS

WATER SAMPLING LOG

Project/No. AY0146.013 Page 1 of 1

Site Location Syracuse, New York Date 1/5/95

Site/Well No. MW-1 Coded/ Replicate No. MS/MSD

Weather Time Sampling Began 12:00 Time Sampling Completed 12:30

EVACUATION DATA

Description of Measuring Point (MP) TOC

Height of MP Above/Below Land Surface 2.25 MP Elevation 413.78

Total Sounded Depth of Well Below MP 24.25 Water-Level Elevation 394.49

Held _____ Depth to Water Below MP 19.29 Diameter of Casing 2"

Wet _____ Water Column in Well 4.96 Gallons Pumped/Bailed Prior to Sampling 3.0

Gallons per Foot 0.16

Gallons in Well 0.79 Sampling Pump Intake Setting (feet below land surface) _____

Evacuation Method Centrifugal pump and polyethylene tubing

SAMPLING DATA/FIELD PARAMETERS

Color Lt. brown Odor None Appearance Turbid Temperature 7.6 °C

Other (specific ion; OVA; HNU; etc.) Turbidity > 200

Specific Conductance, umhos/cm 740 pH 6.32

Sampling Method and Material Teflon bailer / polypropylene rope

Constituents Sampled	Container Description From Lab X or G&M _____	Preservative
Metal	500 mL plastic	HNO_3
Cyanide	500 mL plastic	NaOH
VOCs	40 mL glass	None

Remarks

Sampling Personnel G. Mattison & J. Gardner

WELL CASING VOLUMES

GAL./FT.				
	1-1/4" = 0.06	2" = 0.16	3" = 0.37	4" = 0.65
	1-1/2" = 0.09	2-1/2" = 0.26	3-1/2" = 0.50	6" = 1.47

WATER SAMPLING LOG

Project/No. AY0146.013

Page 1 of 1

Site Location Syracuse, New York

Date 1/5/95

Site/Well No. MW-1

Coded/ Replicate No. MS/MSD

Weather 20 degrees, clear

Time Sampling Began 1:30

Time Sampling Completed 2:15

EVACUATION DATA

Description of Measuring Point (MP) TOC

Height of MP Above/Below Land Surface 2.76

MP Elevation 394.84

Total Sounded Depth of Well Below MP 12.86

Water-Level Elevation 390.38

Held _____ Depth to Water Below MP 4.46

Diameter of Casing 2" 2"

Wet _____ Water Column in Well 8.40

Gallons Pumped/Bailed Prior to Sampling 5 gallons

Gallons per Foot 0.16

Gallons in Well 1.34

Sampling Pump Intake Setting (feet below land surface) _____

Evacuation Method Centrifugal pump

SAMPLING DATA/FIELD PARAMETERS

Color Brown Odor None Appearance Slightly turbid Temperature 6.8 °C

Other (specific ion; OVA; HNU; etc.) Turbidity > 200 NTUs

Specific Conductance, umhos/cm 1740 pH 5.76

Sampling Method and Material Teflon bailer / polypropylene rope

Constituents Sampled	Container Description From Lab X or G&M _____	Preservative
Metal	500 mL plastic	HNO_3
Cyanide	500 mL plastic	NaOH
VOCs	40 mL glass	None

Remarks

Sampling Personnel G. Mattison & J. Gardner

WELL CASING VOLUMES

GAL./FT.				
	1-1/4" = 0.06	2" = 0.16	3" = 0.37	4" = 0.65
	1-1/2" = 0.09	2-1/2" = 0.26	3-1/2" = 0.50	6" = 1.47

WATER SAMPLING LOG

Project/No. AY0146.013

Page 1 of 1

Site Location Syracuse, New York

Date 1/5/95

Site Well No. MW-1

Coded Replicate No. MS/MSD

Weather 20 degrees, clear

Time Sampling Began 2:15

Time Sampling Completed 2:45

EVACUATION DATA

Description of Measuring Point (MP) Top of PVC

Height of MP Above/Below Land Surface 3.03

MP Elevation 387.83

Total Sounded Depth of Well Below MP 12.41

Water-Level Elevation 384.14

Held _____ Depth to Water Below MP 3.69

Diameter of Casing 2" 2"

Wet _____ Water Column in Well 8.72

Gallons Pumped/Bailed Prior to Sampling 5 gallons

Gallons per Foot 0.16

Gallons in Well 1.50

Sampling Pump Intake Setting (feet below land surface) _____

Evacuation Method Centrifugal pump and polyethylene tubing

SAMPLING DATA/FIELD PARAMETERS

Color Gray Odor None Appearance Very turbid Temperature 8 °C

Other (specific ion; OVA; HNU; etc.) Turbidity > 200 NTUs

Specific Conductance, umhos/cm 1020 pH 6.29

Sampling Method and Material Teflon bailer and polypropylene rope

Constituents Sampled	Container Description From Lab X or G&M _____	Preservative
Metal	500 mL plastic	HNO_3
Cyanide	500 mL plastic	NaOH
VOCs	40 mL glass	None

Remarks

Sampling Personnel G. Mattison & J. Gardner

WELL CASING VOLUMES

GAL./FT.				
	1-1/4" = 0.06	2" = 0.16	3" = 0.37	4" = 0.65
	1-1/2" = 0.08	2-1/2" = 0.26	3-1/2" = 0.50	6" = 1.47

WATER SAMPLING LOG

Project/No. AY0146.013

Page 1 of 1

Site Location Syracuse, New York

Date 1/5/95

Site/Well No. MW-1

Coded/ Replicate No. MS/MSD

Weather 20 degrees, clear

Time Sampling Began 3:30

Time Sampling Completed 4:00

EVACUATION DATA

Description of Measuring Point (MP) TOC

Height of MP Above/Below Land Surface 3.05

MP Elevation 385.69

Total Sounded Depth of Well Below MP 13.10

Water-Level Elevation 380.44

Held _____ Depth to Water Below MP 5.15

Diameter of Casing 2" 2"

Wet _____ Water Column in Well 7.95

Gallons Pumped/Bailed Prior to Sampling 4 gallons

Gallons per Foot 0.16

Gallons in Well 1.27

Sampling Pump Intake Setting (feet below land surface) _____

Evacuation Method Centrifugal pump / polyethylene tubing

SAMPLING DATA/FIELD PARAMETERS

Color Brown Odor Yes Appearance Very turbid Temperature 7.9 °C

Other (specific ion; OVA; HNU; etc.) Turbidity > 200 NTUs

Specific Conductance, umhos/cm 1520 pH 5.87

Sampling Method and Material Teflon bailer / polypropylene rope

Constituents Sampled	Container Description From Lab X or G&M _____	Preservative
Metal	500 mL plastic	HNO_3
Cyanide	500 mL plastic	NaOH
VOCs	40 mL glass	None

Remarks

Sampling Personnel G. Mattison & J. Gardner

WELL CASING VOLUMES

GAL./FT.				
	1-1/4" = 0.06	2" = 0.16	3" = 0.37	4" = 0.65
	1-1/2" = 0.09	2-1/2" = 0.26	3-1/2" = 0.50	6" = 1.47

WATER SAMPLING LOG

Project/No. AY0146.013

Page 1 of 1

Site Location Syracuse, New York

Date 1/5/95

Site/Well No. MW-1

Coded/ Replicate No. MS/MSD

Weather 20 degrees, clear

Time Sampling Began 4:00

Time Sampling Completed 4:30

EVACUATION DATA

Description of Measuring Point (MP) TOC

Height of MP Above/Below Land Surface 1.49

MP Elevation 385.40

Total Sounded Depth of Well Below MP 19.81

Water-Level Elevation 380.07

Held _____ Depth to Water Below MP 5.33

Diameter of Casing 2" 2"

Wet _____ Water Column in Well 14.48

Gallons Pumped/Bailed Prior to Sampling 7 gallons

Gallons per Foot 0.16

Gallons in Well 2.31

Sampling Pump Intake Setting (feet below land surface) _____

Evacuation Method Centrifugal pump / tubing

SAMPLING DATA/FIELD PARAMETERS

Color Brown Odor Yes Appearance Turbid Temperature 8.2 °C

Other (specific ion; OVA; HNU; etc.) Turbidity > 200 NTUs

Specific Conductance, umhos/cm 1700 pH 5.82

Sampling Method and Material Teflon bailer / polypropylene rope

Constituents Sampled	Container Description From Lab X or G&M _____	Preservative
Metal	500 mL plastic	HNO_3
Cyanide	500 mL plastic	NaOH
VOCs	40 mL glass	None

Remarks Metals sample not filtered due to frozen filter; sample sent with preservative.

Sampling Personnel G. Mattison & J. Gardner

WELL CASING VOLUMES

GAL./FT.				
	1-1/4" = 0.06	2" = 0.16	3" = 0.37	4" = 0.65
	1-1/2" = 0.09	2-1/2" = 0.26	3-1/2" = 0.50	6" = 1.47

WATER SAMPLING LOG

Project/No. AY0146.013

Page 1 of 1

Site Location Syracuse, New York

Date 1/5/95

Site/Well No. MW-1

Coded/ Replicate No. MS/ --

Weather 20 degrees, sunny

Time Sampling Began 11:00

Time Sampling Completed 11:30

EVACUATION DATA

Description of Measuring Point (MP) TOC

Height of MP Above/Below Land Surface 3.34

MP Elevation 390.40

Total Sounded Depth of Well Below MP 13.20

Water-Level Elevation 386.25

Held _____ Depth to Water Below MP 4.15

Diameter of Casing 2"

Wet _____ Water Column in Well 9.05

Gallons Pumped/Bailed Prior to Sampling 4.5

Gallons per Foot 0.16

Gallons in Well 1.50

Sampling Pump Intake Setting (feet below land surface) _____

Evacuation Method Centrifugal pump

SAMPLING DATA/FIELD PARAMETERS

Color Brown Odor None Appearance Turbid Temperature 8.7 °C

Other (specific ion; OVA; HNU; etc.) Turbidity > 200 NTUs

Specific Conductance, umhos/cm 820 pH 6.42

Sampling Method and Material Teflon bailer / polypropylene rope

Constituents Sampled	Container Description From Lab X or G&M _____	Preservative
Metal	500 mL plastic	HNO_3
Cyanide	500 mL plastic	NaOH
VOCs	40 mL glass	None

Remarks

Sampling Personnel G. Mattison & J. Gardner

WELL CASING VOLUMES

GAL./FT.				
	1-1/4" = 0.06	2" = 0.16	3" = 0.37	4" = 0.65
	1-1/2" = 0.09	2-1/2" = 0.26	3-1/2" = 0.50	6" = 1.47

WATER SAMPLING LOG

Project/No. AY0146.013 Page 1 of 1

Site Location Syracuse, New York Date 1/5/95

Site/Well No. MW-1 Coded/ Replicate No. MS/ --

Weather 20 degrees, clear Time Sampling Began 10:45 Time Sampling Completed 11:15

EVACUATION DATA

Description of Measuring Point (MP) Top of PVC Casing

Height of MP Above/Below Land Surface 1.56 MP Elevation 414.70

Total Sounded Depth of Well Below MP 16.82 Water-Level Elevation 410.03

Held _____ Depth to Water Below MP 4.67 Diameter of Casing 2" 2"

Wet _____ Water Column in Well 12.15 Gallons Pumped/Bailed Prior to Sampling 6

Gallons per Foot 0.16

Gallons in Well 1.90 Sampling Pump Intake Setting (feet below land surface) _____

Evacuation Method Centrifugal pump / polyethylene tubing

SAMPLING DATA/FIELD PARAMETERS

Color Red/Brown Odor None Appearance Turbid Temperature 4.4 °C

Other (specific ion; OVA; HNU; etc.) Turbidity > 200 NTUs

Specific Conductance, umhos/cm 500 pH 5.78

Sampling Method and Material Teflon bailer / polypropylene rope

Constituents Sampled	Container Description From Lab X or G&M _____	Preservative
Metal	500 mL plastic	HNO_3
Cyanide	500 mL plastic	NaOH
VOCs	40 mL glass	None

Remarks

Sampling Personnel G. Mattison & J. Gardner

WELL CASING VOLUMES

GAL./FT.				
	1-1/4" 0.06	2" 0.16	3" 0.37	4" 0.65
	1-1/2" 0.09	2-1/2" 0.26	3-1/2" 0.50	6" 1.47

WATER SAMPLING LOG

Project/No. AY0146.013

Page 1 of 1

Site Location Syracuse, New York

Date 1/5/95

Site/Well No. MW-1

Coded/ Replicate No. MS/ --

Weather 20 degrees, sunny

Time Sampling Began 3:00

Time Sampling Completed 3:30

EVACUATION DATA

Description of Measuring Point (MP) TOC

Height of MP Above/Below Land Surface 1.46

MP Elevation 394.67

Total Sounded Depth of Well Below MP 16.95

Water-Level Elevation 387.16

Held _____ Depth to Water Below MP 7.51

Diameter of Casing 2" 2"

Wet _____ Water Column in Well 9.44

Gallons Pumped/Bailed Prior to Sampling 5 gallons

Gallons per Foot 0.16

Gallons in Well 1.50

Sampling Pump Intake Setting (feet below land surface) _____

Evacuation Method Centrifugal pump / polyethylene tubing

SAMPLING DATA/FIELD PARAMETERS

Color Brown Odor None Appearance Very turbid Temperature 9.6 °C

Other (specific ion; OVA; HNU; etc.) Turbidity > 200 NTUs

Specific Conductance, umhos/cm 1040 pH 5.93

Sampling Method and Material Teflon bailer / polypropylene rope

Constituents Sampled	Container Description From Lab X or G&M	Preservative
Metal	500 mL plastic	HNO_3
Cyanide	500 mL plastic	NaOH
VOCs	40 mL glass	None

Remarks

Sampling Personnel G. Mattison & J. Gardner

WELL CASING VOLUMES

GAL./FT.				
	1-1/4" = 0.06	2" = 0.16	3" = 0.37	4" = 0.65
	1-1/2" = 0.08	2-1/2" = 0.26	3-1/2" = 0.50	6" 1.47

WATER SAMPLING LOG

Project/No. AY0546 017 Page 1 of 1

Site Location Syracuse China, Syracuse, New York Date 8/17/95

Site/Well No. MW-1 Coded Replicate No.

Weather Clear, 85° Time Sampling Began 10:40 Time Sampling Completed 11:00

EVACUATION DATA

Description of Measuring Point (MP) Top of Casing

Height of MP Above/Below Land Surface MP Elevation

Total Sounded Depth of Well Below MP 24.26 Water-Level Elevation

Held Depth to Water Below MP 20.75 Diameter of Casing 2"

Wet Water Column in Well 3.51 Gallons Pumped Bailed Prior to Sampling 3 gallons

Gallons per Foot 0.16

Gallons in Well 0.56 Sampling Pump Intake Setting (feet below land surface)

Evacuation Method Disposable Bailer (Teflon) Polypropylene Rope

SAMPLING DATA/FIELD PARAMETERS

Color Light tan Odor None Appearance Turbid Temperature 17° C

Other (specific ion; OVA; HNU; etc.)

Turbidity = 130

Specific Conductance, umhos/cm 1060 pH 7.39

Sampling Method and Material Disposable Bailer (Teflon); Polypropylene Rope

Constituents Sampled	Container Description From Lab X or G&M	Preservative
TAL - Total Inorganics(no cyanide)	500 ml plastic	HNO_3
TAL - Dissolved Inorganics(no cyanide)	500 ml plastic	Unpreserved

Remarks

Sampling Personnel J. Gardner L. Westbay

WELL CASING VOLUMES

GAL./FT.				
	1-1/4" = 0.06	2" = 0.16	3" = 0.37	4" = 0.66
	1-1/2" = 0.09	2-1/2" = 0.26	3-1/2" = 0.50	6" = 1.47

WATER SAMPLING LOG

Project/No: AY0146.017

Page 1 of 1

Site Location: Syracuse China, Syracuse, New York

Date: 8-17-95

Site/Well No: MW-2

Coded Replicate No:

Weather: Sunny, Clear, 85°

Time Sampling Began: 11:40

Time Sampling Completed: 12:00

EVACUATION DATA

Description of Measuring Point (MP): Top of Casing

Height of MP Above/Below Land Surface:

MP Elevation:

Total Sounded Depth of Well Below MP: 12.88

Water-Level Elevation:

Held: Depth to Water Below MP: 5.91

Diameter of Casing: 2"

Wet: ater Column in Well: 6.97

Gallons Pumped/Bailed Prior to Sampling: 3.3 gallons

Gallons per Foot: 0.16

Gallons in Well: 1.12

Sampling Pump Intake Setting (feet below land surface):

Evacuation Method: Disposable Bailer (Teflon); Polypropylene Rope

SAMPLING DATA/FIELD PARAMETERS

Color: Light tan red Odor: None Appearance: Turbid Temperature: 18° C

Other (specific ion; OVA; HNU; etc.)

Turbidity = 200

Specific Conductance, umhos/cm: 2300 pH: 7.20

Sampling Method and Material: Disposable Bailer (Teflon); Polypropylene Rope.

Constituents Sampled	Container Description From Lab X or G&M	Preservative
TAL - Total Inorganics(no cyanide)	500 ml plastic	HNO_3
TAL-Dissolved Inorganics(no cyanide)	500 ml plastic	Unpreserved

Remarks:

Sampling Personnel: J. Gardner L. Westbay

WELL CASING VOLUMES

GAL./FT.				
	1-1/4" = 0.06	2" = 0.16	3" = 0.37	4" = 0.65
	1-1/2" = 0.09	2-1/2" = 0.26	3-1/2" = 0.50	6" = 1.47

WATER SAMPLING LOG

Project/No. AY0146.017

Page 1 of 1

Site Location Syracuse China, Syracuse, New York

Date 8/17/95

Site Well No. MW-3

Coded Replicate No

Weather Sunny, Clear, 90°

Time Sampling Began 12:05

Time Sampling Completed 12:35

EVACUATION DATA

Description of Measuring Point (MP) Top of Casing

Height of MP Above Below Land Surface

MP Elevation

Total Sounded Depth of Well Below MP 11.90

Water-Level Elevation

Held

Depth to Water Below MP 4.19

Diameter of Casing 2"

Wet

ater Column in Well 7.71

Gallons Pumped Bailed Prior to Sampling 3.7 gallons

Gallons per Foot 0.16

Gallons in Well 1.23

Sampling Pump Intake Setting (feet below land surface)

Evacuation Method Disposable Bailer (Teflon); Polypropylene Rope.

SAMPLING DATA/FIELD PARAMETERS

Color Gray-Brown Odor None Appearance Turbid Temperature 20° C

Other (specific ion, OVA, HNU, etc.)

Turbidity - 200

Specific Conductance, umhos/cm 1280 pH 7.07

Sampling Method and Material Disposable Bailer (Teflon); Polypropylene Rope.

Constituents Sampled	Container Description From Lab X or G&M	Preservative
TAL - Total Inorganics(no cyanide)	500 ml plastic	HNO_3
TAL-Dissolved Inorganics(no cyanide)	500 ml plastic	Unpreserved

Remarks

Sampling Personnel J. Gardner/L. Westbay

WELL CASING VOLUMES

GAL./FT.				
	1-1/4" = 0.06	2" = 0.16	3" = 0.37	4" = 0.65
	1-1/2" 0.09	2-1/2" 0.26	3-1/2" = 0.50	6" 1.47

WATER SAMPLING LOG

Project/No. AY0146.017

Page 1 of 1

Site Location Syracuse China, Syracuse, New York

Date 8.17.95

Site/Well No. MW-4

Coded Replicate No.

Weather Sunny, Clear, 90°

Time Sampling Began 12:50

Time Sampling Completed 1:10

EVACUATION DATA

Description of Measuring Point (MP) Top of Casing

Height of MP Above/Below Land Surface

MP Elevation

Total Sounded Depth of Well Below MP 13.11

Water-Level Elevation

Held

Depth to Water Below MP 5.42

Diameter of Casing 2"

Wet

ater Column in Well 7.69

Gallons Pumped Bailed Prior to Sampling 3.7 gallons

Gallons per Foot 0.16

Gallons in Well 1.23

Sampling Pump Intake Setting (feet below land surface)

Evacuation Method Disposable Bailer (Teflon); Polypropylene Rope

SAMPLING DATA/FIELD PARAMETERS

Color Light tan Odor None Appearance Slightly Turbid Temperature 22° C

Other (specific ion; OVA, HNU, etc.)

Turbidity = 140

Specific Conductance, umhos cm 205[illegible] pH 7.20

Sampling Method and Material Disposable Bailer (Teflon); Polypropylene Rope

Constituents Sampled	Container Description From Lab X or G&M	Preservative
TAL - Total Inorganics (no cyanide)	500 ml plastic	HNO_3
TAL - Dissolved Inorganics (no cyanide)	5[illegible] ml plastic	Unpreserved

Remarks

Sampling Personnel J. Gardner/L. Westbay

WELL CASING VOLUMES

GAL./FT.				
	1-1/4" = 0.06	2" = 0.16	3" = 0.37	4" = 0.65
	1-1/2" = 0.09	2-1/2" = 0.26	3-1/2" = 0.50	6" = 1.47

WATER SAMPLING LOG

Project No. AY0146 017

Page 1 of 1

Site Location Syracuse China, Syracuse, New York

Date 8/17/95

Site/Well No MW-41

Coded Replicate No.

Weather Sunny, Clear, 90°

Time Sampling Began 1:10

Time Sampling Completed 1:50

EVACUATION DATA

Description of Measuring Point (MP) Top of Casing

Height of MP Above/Below Land Surface

MP Elevation

Total Sounded Depth of Well Below MP 19.80

Water-Level Elevation

Held

Depth to Water Below MP 3.62

Diameter of Casing 2"

Wet

ater Column in Well 16.18

Gallons Pumped Bailed Prior to Sampling 7.8 gallons

Gallons per Foot 0.16

Gallons in Well 2.59

Sampling Pump Intake Setting (feet below land surface)

Evacuation Method Teflon bailer and polypropylene rope

SAMPLING DATA/FIELD PARAMETERS

Color Red Brown Odor None Appearance Turbid Temperature 15° C

Other (specific ion; OVA; HNU, etc.)

Turbidity = 199 NTU

Specific Conductance, umhos cm 1980 pH 7.0

Sampling Method and Material Teflon bailer and polypropylene rope

Constituents Sampled	Container Description From Lab X or G&M	Preservative
TAL - Total Inorganics (no cyanide)	500 ml plastic	HNO_3
TAL - Dissolved Inorganics (no cyanide)	500 ml plastic	Unpreserved
Field Blank	500 ml plastic	HNO_3

Remarks

Sampling Personnel J. Gardner L. Westbay

WELL CASING VOLUMES

GAL./FT.				
	1-1/4" = 0.06	2" = 0.16	3" = 0.37	4" 0.65
	1-1/2" = 0.09	2-1/2" = 0.26	3-1/2" = 0.50	6" = 1.47

WATER SAMPLING LOG

Project/No. AY0146.017

Page 1 of 1

Site Location Syracuse China, Syracuse, New York

Date 8/17/95

Site Well No. MW-5

Coded Replicate No.

Weather Clear, 85°

Time Sampling Began 11:16

Time Sampling Completed 11:30

EVACUATION DATA

Description of Measuring Point (MP) Top of Casing

Height of MP Above/Below Land Surface

MP Elevation

Total Sounded Depth of Well Below MP 13.19

Water-Level Elevation

Held

Depth to Water Below MP 5.30

Diameter of Casing 2"

Wet

ater Column in Well 7.89

Gallons Pumped/Bailed Prior to Sampling 3.8 gallons

Gallons per Foot 0.16

Gallons in Well 1.26

Sampling Pump Intake Setting (feet below land surface)

Evacuation Method Disposable Bailer (Teflon); Polypropylene Rope.

SAMPLING DATA/FIELD PARAMETERS

Color Lt. tan/gray Odor None Appearance Slightly Turbid Temperature 17° C

Other (specific ion: OVA, HNU, etc.)

Turbidity 96.2

Specific Conductance, umhos/cm 1140 pH 7.43

Sampling Method and Material Disposable Bailer (Teflon); Polypropylene Rope.

Constituents Sampled	Container Description From Lab X or G&M	Preservative
TAL - Total Inorganics (no cyanide)	500 ml plastic	HNO_3
TAL - Dissolved Inorganics (no cyanide)	500 ml plastic	Unpreserved

Remarks

Sampling Personnel J. Gardner L. Westbay

WELL CASING VOLUMES

GAL./FT.			
1-1/4" = 0.06	2" = 0.16	3" = 0.37	4" = 0.66
1-1/2" = 0.09	2-1/2" = 0.26	3-1/2" = 0.50	6" = 1.47

WATER SAMPLING LOG

Project/No. AY0146.017

Page 1 of 1

Site Location Syracuse China, Syracuse, New York

Date 8/17/95

Site/Well No. MW-6

Coded Replicate No Rep. 1

Weather 85°

Time Sampling Began 9:50

Time Sampling Completed 10:30

EVACUATION DATA

Description of Measuring Point (MP) Top of Casing.

Height of MP Above/Below Land Surface

MP Elevation

Total Sounded Depth of Well Below MP 16.36

Water-Level Elevation

Held

Depth to Water Below MP 3.85

Diameter of Casing 2"

Wet

ater Column in Well 12.51

Gallons Pumped Bailed Prior to Sampling 6 gallons

Gallons per Foot 0.16

Gallons in Well 2.00

Sampling Pump Intake Setting (feet below land surface)

Evacuation Method Disposable Bailer (Teflon); Polypropylene Rope.

SAMPLING DATA/FIELD PARAMETERS

Color Red Brown Odor None Appearance Turbid Temperature 17° C

Other (specific ion; OVA; HNU; etc.)

Turbidity = 77.2

Specific Conductance, umhos/cm 729 pH 7.03

Sampling Method and Material Disposable Bailer (Teflon); Polypropylene Rope.

Constituents Sampled	Container Description From Lab X or G&M	Preservative
TAL - Total Inorganics (no cyanide)	500 ml plastic	HNO_3
TAL - Dissolved Inorganics (no cyanide)	500 ml plastic	Unpreserved

Remarks

Sampling Personnel J. Gardner/L. Westbay

WELL CASING VOLUMES

GAL./FT.				
	1-1/4" = 0.06	2" = 0.16	3" = 0.37	4" = 0.66
	1-1/2" = 0.09	2-1/2" = 0.26	3-1/2" = 0.50	6" = 1.47

WATER SAMPLING LOG

Project/No. AY0146.017 Page 1 of 1

Site Location Syracuse China, Syracuse, New York Date 8/17/95

Site/Well No MW-7 Coded Replicate No

Weather 85° Time Sampling Began 2:30 Time Sampling Completed 3:00

EVACUATION DATA

Description of Measuring Point (MP) Top of Casing

Height of MP Above/Below Land Surface MP Elevation

Total Sounded Depth of Well Below MP 16.89 Water-Level Elevation

Held Depth to Water Below MP 5.53 Diameter of Casing 2"

Wet ater Column in Well 11.36 Gallons Pumped/Bailed Prior to Sampling 5.5 gallons

Gallons per Foot 0.16

Gallons in Well 1.81 Sampling Pump Intake Setting (feet below land surface)

Evacuation Method Teflon bailer and polypropylene rope

SAMPLING DATA/FIELD PARAMETERS

Color Light Brown Odor None Appearance Turbid Temperature 20° C

Other (specific ion; OVA; HNU, etc.)

Turbidity - 200

Specific Conductance, umhos/cm 1380 pH 7.02

Sampling Method and Material Teflon bailer and polypropylene rope

Constituents Sampled	Container Description From Lab X or G&M	Preservative
TAL - Total Inorganics (no cyanide)	500 ml plastic	HNO_3
TAL - Dissolved Inorganics (no cyanide)	500 ml plastic	Unpreserved

Remarks

Sampling Personnel J. Gardner L. Westbay

WELL CASING VOLUMES

GAL./FT.				
	1-1/4" = 0.06	2" = 0.16	3" = 0.37	4" = 0.65
	1-1/2" = 0.08	2-1/2" = 0.26	3-1/2" = 0.50	6" = 1.47

APPENDIX E

HYDRAULIC CONDUCTIVITY TESTING DATA

GERAGHTY & MILLER, INC.
Ground-Water Consultants

WATER LEVEL/PUMPING TEST RECORD

PROJECT Syracuse China Slug Test WELL MW-1 SITE Syracuse, NY

SCREEN SETTING 12'-22' MEASURING POINT DESCRIPTION T.O.C. (PVC) HEIGHT ABOVE GROUND SURFACE

STATIC WATER LEVEL 19.01' MEASURED WITH m-Scope DATE/TIME 1-17-95

DRAWDOWN ☐ START OF TEST 10:27 PUMPING WELL

RECOVERY ☐ END OF TEST 10:49

DISTANCE FROM WELL MEASURED TO PUMPING WELL (r) DISCHARGE RATE ORIFICE

DATE & TIME	WELL OR t (mins)	HELD (ft)	WET (ft) Time	DEPTH TO WATER (ft)	s (ft)	DEW.[1] CORR. (ft)	ART.[2] s' (ft)	Time	Q (gpm) Depth to Water	MANOF METER (in) S	REMARKS[3]
1-	MW-1		initial								
			.10					8:30	19.20	.19	
			.20					9.00	19.19	.18	
			.30	19.85	.74			9.30	19.18	.17	
			.40	19.62	.61			10.00	19.18	.17	
			.50	19.55	.54			11.00	19.17	.16	
			1.00	19.51	.50			12.00	19.15	.14	
			1.15	19.47	.46			13.00	19.14	.13	
			1.30	19.45	.44			14.00	19.13	.12	
			1.45	19.42	.41			15.00	19.12	.11	
			2.00	19.40	.39		16	17.00	19.11	.10	
			2.15	19.39	.38			18.00	19.09	.08	
			2.30	19.37	.36			19.00	19.09	.08	
			2.45	19.35	.34			20.00	19.08	.07	
			3.00	19.35	.34			22.00	19.07	.06	
			3.15	19.34	.33			24.00			
			3.30	19.33	.32			26.00			
			4.00	19.31	.30			28.00			
			4.15	19.30	.29			30.00			
			4.30	19.29	.28						
	4.45		5.00	19.28	.27						
			5.30	19.27	.26						
			6.00	19.26	.25						
			6.30	19.24	.23						
			7.00	19.23	.22						
			7.30	19.22	.21						
			8.00	19.21	.20						

1) Dewatering Correction 2) Equivalent Artesian Drawdown 3) pH, Spec. Cond., Temp., Weather, Sand, Turbidity, etc.

GERAGHTY & MILLER, INC.
Ground Water Consultants

WATER LEVEL/PUMPING TEST RECORD

PROJECT Syracuse China Slug Test WELL MW-2 SITE Syracuse China

SCREEN SETTING 4.5'-9.5' MEASURING POINT DESCRIPTION TOC PVC HEIGHT ABOVE GROUND SURFACE

STATIC WATER LEVEL 4.00 MEASURED WITH in-scape DATE/TIME 1-17-95

DRAWDOWN ☐ START OF TEST 11:58 PUMPING WELL

RECOVERY ☐ END OF TEST 12:22

DISTANCE FROM WELL MEASURED TO PUMPING WELL (r) DISCHARGE RATE ORIFICE

DATE & TIME	WELL OR t (mins)	HELD (ft)	WET (ft) Time	DEPTH TO WATER (ft)	s (ft)	DEW.[1] CORR. (ft)	ART.[2] s' (ft)	Time	DEPTH TO WATER	MANOMETER	REMARKS[3]
1-	MW-2										
			initial					7			
			.10					8.00	4.65	.65	
			.25	5.45	1.45			8.30	4.61	.61	
			.30	5.44	1.44			9.00	4.58	.58	
			.40	5.42	1.42			9.30	4.55	.55	
			.50	5.38	1.38			10.00	4.52	.52	
			1.00	5.36	1.36			11.00	4.49	.49	
			1.15	5.32	1.32			12.00	4.43	.43	
			1.30	5.30	1.30			13.00	4.38	.38	
			1.45	5.26	1.26			14.00	4.35	.35	
			2.00	5.21	1.21			15.00	4.32	.32	
			2.15	5.20	1.20			16.00	4.31	.31	
			2.30	5.18	1.18			17.00	4.26	.26	
			2.45	5.14	1.14			18.00	4.22	.22	
			3.00	5.10	1.10			19.00	4.21	.21	
			3.15	5.08	1.08			20.00	4.19	.19	
			3.30	5.05	1.05			22.00	4.15	.15	
			3.45 4.00	5.01 5.00	1.01 1.00			24.00	4.11	.11	
			4.15	4.97	.97			26.00			
			4.30	4.95	.95			28.00			
	4.45		5.00	4.91 4.90	.91 .90			30.00			
			5.30	4.86	.86						
			6.00	4.81	.81						
			6.30	4.78	.78						
			7.00	4.71	.71						
			7.30	4.69	.69						

1) Dewatering Correction 2) Equivalent Artesian Drawdown 3) pH, Spec. Cond., Temp., Weather, Sand, Turbidity, etc.

GERAGHTY & MILLER, INC.
Ground Water Consultants

WATER LEVEL/PUMPING TEST RECORD

PROJECT Syracuse China Slug Test WELL MW-3 SITE Syracuse, NY

SCREEN SETTING 4'-9' MEASURING POINT DESCRIPTION TOC (PVC) HEIGHT ABOVE GROUND SURFACE

STATIC WATER LEVEL 3.50 MEASURED WITH DATE/TIME 1-17-95

DRAWDOWN ☐ START OF TEST 12:40 PUMPING WELL

RECOVERY ☐ END OF TEST 12:58

DISTANCE FROM WELL MEASURED TO PUMPING WELL (r) DISCHARGE RATE ORIFICE

DATE & TIME	WELL OR t (mins)	HELD (ft)	~~WET (ft)~~ Time	DEPTH TO WATER (ft)	s (ft)	DEW.[1] CORR. (ft)	ART.[2] s' (ft)	Time	Q (gpm) Depth to Water	MANOMETER (in)	REMARKS[3]
1-	MW3										
			initial								
			.10	—				7.00	4.00	.50	
			.20	4.81	1.31			7.30	3.98	.48	
			.30	4.75	1.25			8.00	3.95	.45	
			.40	4.70	1.20			8.30	3.93	.43	
			.50	4.68	1.18			9.00	3.91	.41	
			1.00	4.65	1.15			9.30	3.90	.40	
			1.15	4.61	1.11			10.00	3.88	.38	
			1.30	4.59	1.09			11.00	3.85	.35	
			1.45	4.55	1.05			12.00	3.81	.31	
			2.00	4.47	.97			13.00	3.80	.30	
			2.15	4.41	.91			14.00	3.78	.28	
			2.30	4.38	.88			15.00	3.76	.26	
			2.45	4.34	.84			16.00	3.74	.24	
			3.00	4.33	.83			17.00	3.73	.23	
			3.15	4.30	.80			18.00	3.72	.22	
			3.30	4.26	.76			19			
			3.45	4.24	.74			20			
			4.00	4.21	.71			22			
			4.15	4.20	.70			24			
			4.30	4.18	.69			26			
			4.45	4.16	.66			28			
			5.00	4.14	.64			30			
			5.30	4.11	.61						
			6.00	4.08	.58						
			6.30	4.04	.54						

1) Dewatering Correction 2) Equivalent Artesian Drawdown 3) pH, Spec. Cond., Temp., Weather, Sand, Turbidity, etc.

GERAGHTY & MILLER, INC.
Ground Water Consultants

WATER LEVEL/PUMPING TEST RECORD

PROJECT Syracuse China Slug Tests WELL MW-4 SITE Syracuse, NY

SCREEN SETTING 4'-9' MEASURING POINT DESCRIPTION TOC (PVC) HEIGHT ABOVE GROUND SURFACE

STATIC WATER LEVEL 4.82 MEASURED WITH M-Scope DATE/TIME 1-17-95

DRAWDOWN ☐ START OF TEST 1:38 PUMPING WELL

RECOVERY ☐ END OF TEST 1:42

DISTANCE FROM WELL MEASURED TO PUMPING WELL (r) DISCHARGE RATE ORIFICE

DATE & TIME	WELL OR t (mins)	HELD (ft)	WET s (ft) Time	DEPTH TO WATER (ft)	s (ft)	DEW.[1] CORR. (ft)	ART.[2] s' (ft)	Time	Q (gpm) Depth to water	MANO-METER (in) S	REMARKS[3]
1-	MW4										
			initial								
								7.00			
			.10	5				7.30			
			.20	5.48	.66			8.00			
			.30	5.14	.32			8.30			
			.40	5.05	.23			9.00			
			.50	5.00	.18			9.30			
			1.00	4.98	.16			10.00			
			1.15	4.91	.09			11			
			1.30	4.86	.04			12			
			1.45	4.86	.04			13			
			2.00	4.85	.03			14			
			2.15	4.85	.03			15			
			2.30	4.84	.02			16			
			2.45	4.84	.02			17			
			3.00	4.83	.01			18			
			3.15	4.83	.01			19			
			3.30	4.82	.00			20			
			3.45	4.82	.00			22			
			4.00					24			
			4.15					26			
			4.30					28			
			4.45					30			
			5.00								
			5.30								
			6.00								
			6.30								

1) Dewatering Correction 2) Equivalent Artesian Drawdown 3) pH, Spec. Cond., Temp., Weather, Sand, Turbidity, etc.

GERAGHTY & MILLER, INC.
Ground-Water Consultants

WATER LEVEL/PUMPING TEST RECORD

PAGE 1 OF 1

PROJECT Syracuse China Slug Test WELL MW-4I SITE Syracuse NY

SCREEN SETTING 13-18 MEASURING POINT DESCRIPTION TOC (PVC) HEIGHT ABOVE GROUND SURFACE

STATIC WATER LEVEL 13.52 MEASURED WITH M-Scope DATE/TIME 1-17-95

DRAWDOWN ☐ START OF TEST 2:00 PUMPING WELL

RECOVERY ☐ END OF TEST 2:10

DISTANCE FROM WELL - MEASURED TO PUMPING WELL (r) DISCHARGE RATE ORIFICE

DATE & TIME	WELL OR t (mins)	HELD (ft)	~~WET (ft)~~ Time	DEPTH TO WATER (ft)	s (ft)	DEW.[1] CORR. (ft)	ART.[2] s' (ft)	Time	~~Q (gpm)~~ Depth to water	~~MANO METER (in)~~ S	REMARKS[3]
1	MW4I										
			initial								
			.10					7.00	14.85	"	
			.20					7.30	14.85	"	
			.30	14.88	1.36			8.00	14.85	"	
			.40	14.88	1.36			8.30	14.85	"	
			.50	14.88	"			9.00	14.85	"	
			1.00	14.87	"			9.30	14.85	"	
			1.15	14.95	"			10.00	14.95	1.33	
			1.30	14.97	1.35			11			
			1.45	14.[illegible]	"			12			
			2.00	14.97	"			13			
			2.15	14.86	1.34			14			
			2.30	14.86	"			15			
			2.45	14.86	"			16			
			3.00	14.86	"			17			
			3.15	14.86	"			18			
			3.30	14.86	"			19			
			3.45	14.86	"			20			
			4.00	14.86	"			22			
			4.15	14.86	"			24			
			4.30	14.86	"			26			
			4.45	14.86	"			28			
			5.00	14.86	"			30			
			5.30	14.86	"						
			6.00	14.85	1.33						
			6.30	14.85	"						

1) Dewatering Correction 2) Equivalent Artesian Drawdown 3) pH, Spec. Cond., Temp., Weather, Sand, Turbidity, etc.

GERAGHTY & MILLER, INC.
Ground Water Consultants

WATER LEVEL/PUMPING TEST RECORD

PAGE 1 OF [illegible]

PROJECT Syracuse China Slug Test WELL MW-5 SITE Syracuse NY

SCREEN SETTING 4-29' MEASURING POINT DESCRIPTION TOC (PVC) HEIGHT ABOVE GROUND SURFACE

STATIC WATER LEVEL 3.78 MEASURED WITH M-Scope DATE/TIME 1-17-95

DRAWDOWN ☐ START OF TEST 11:20 PUMPING WELL

RECOVERY ☐ END OF TEST 11:45

DISTANCE FROM WELL MEASURED TO PUMPING WELL (r) DISCHARGE RATE ORIFICE

DATE & TIME	WELL OR t (mins)	HELD (ft)	WET (ft) Time	DEPTH TO WATER (ft)	s (ft)	DEW.[1] CORR. (ft)	ART.[2] s' (ft)	Time	~~Gr. Depth~~ Depth to water	~~MANOMETER~~	REMARKS[3]
1-	MW-5										
			10:49								
			.10	5.12	1.34			7.00	4.06	.28	
			.20					7.30	4.03	.25	
			.30	5.03	1.25			8.00	4.01	.23	
			.40	4.96	1.18			8.30	3.99	.21	
			.50	4.90	1.12			9.00	3.96	.18	
			1.00	4.86	1.08			9.30	3.94	.16	
			1.15	4.80	1.02			10.00	3.92	.14	
			1.30	4.72	.94			11	3.90	.12	
			1.45	4.66	.88			12	3.88	.10	
			2.00	4.61	.83			13	3.86	.08	
			2.15	4.58	.80			14	3.83	.05	
			2.30	4.54	.76			15	3.83	.05	
			2.45	4.48	.70			16	3.82	.04	
			3.00	4.44	.66			17	3.81	.03	
			3.15	4.41	.63			18	3.80	.02	
			3.30	4.38	.60			19			
			3.45	4.35	.57			20			
			4.00	4.31	.53			22			
			4.15	4.28	.50			24			
			4.30	4.26	.48			26			
			4.45	4.22	.44			28			
			5.00	4.21	.43			30			
			5.30	4.16	.38						
			6.00	4.12	.34						
			6.30	4.09	.31						

1) Dewatering Correction 2) Equivalent Artesian Drawdown 3) pH, Spec. Cond., Temp., Weather, Sand, Turbidity, etc.

GERAGHTY & MILLER, INC.
Ground-Water Consultants

WATER LEVEL/PUMPING TEST RECORD

PROJECT Syracuse Chem-Shaft WELL MW-6 SITE Syracuse, NY

SCREEN SETTING 5-15 MEASURING POINT DESCRIPTION TOC (PVC) HEIGHT ABOVE GROUND SURFACE

STATIC WATER LEVEL 2.63 MEASURED WITH M-Scope DATE/TIME 1-17-95

DRAWDOWN ☐ START OF TEST 10:05 PUMPING WELL

RECOVERY ☐ END OF TEST 10:15

DISTANCE FROM WELL MEASURED TO PUMPING WELL (r) DISCHARGE RATE ORIFICE

DATE & TIME	WELL OR t (mins)	HELD (ft)	WET (ft) Time	DEPTH TO WATER (ft)	s (ft)	DEW.[1] CORR. (ft)	ART.[2] s' (ft)	Time	Q (gpm) Depth to Water	~~MANOMETER (in)~~ S	REMARKS[3]
1-	MW-6										
			initial								
			.10					7.00	2.76	.13	
			.20	3.91 3.83	1.28 1.20			7.30	2.75	.12	
			.30	3.75	1.12			8.00	2.74	.11	
			.40	3.65	1.02			8.30	2.72	.09	
			.50	3.58	.95			9.00	2.72	.09	
			1.00	3.51	.88			9.30	2.71	.08	
			1.15	3.43	.80			10.00	2.70	.07	10:15 am - end
			1.30	3.35	.72			11			
			1.45	3.28	.65			12			
			2.00	3.21	.58			13			
			2.15	3.15	.52			14			
			2.30	3.10	.47			15			
			2.45	3.06	.43			16			
			3.00	3.02	.39			17			
			3.15	2.99	.36			18			
			3.30	2.96	.33			19			
			3.45	2.93	.30			20			
			4.00	2.91	.28			22			
			4.15	2.89	.26			24			
			4.30	2.87	.24			26			
			4.45	2.86	.23			28			
			5.00	2.84	.21			30			
			5.30	2.81	.18						
			6.00	2.79	.16						
			6.30	2.77	.14						

1) Dewatering Correction 2) Equivalent Artesian Drawdown 3) pH, Spec. Cond., Temp., Weather, Sand, Turbidity, etc.

GERAGHTY & MILLER, INC.
Ground-Water Consultants

WATER LEVEL/PUMPING TEST RECORD

PAGE 1 OF 1

Syracuse China

PROJECT AY014600.00 Slug Test WELL MW-7 SITE Syracuse, NY

SCREEN SETTING 5'-15' MEASURING POINT DESCRIPTION TOC (PVC) HEIGHT ABOVE GROUND SURFACE

STATIC WATER LEVEL 5.02 MEASURED WITH M-Scope DATE/TIME 1-17-95

DRAWDOWN ☐ START OF TEST 1:14 PUMPING WELL

RECOVERY ☐ END OF TEST 1:24

DISTANCE FROM WELL MEASURED TO PUMPING WELL (r) DISCHARGE RATE ORIFICE

DATE & TIME	WELL OR t (mins)	HELD (ft)	WET (ft) Time	DEPTH TO WATER (ft)	s (ft)	DEW.[1] CORR. (ft)	ART.[2] s' (ft)	Time	~~Q (gpm)~~ Depth to Water	~~MANO. METER~~ S	REMARKS[3]
	MW-7		initial								
			.10					7.00	5.19	.17	
			.20	6.31	1.29			7.30	5.17	.15	
			.30	6.20	1.18			8.00	5.15	.13	
			.40	6.11	1.09			8.30	5.14	.12	
			.50	6.03	1.01			9.00	5.12	.10	
			1.00	5.99	.97			9.30	5.11	.09	
			1.15	5.91	.89			10.00	5.10	.08	
			1.30	5.83	.81			11.00	5.08	.06	1:24 end
			1.45	5.79	.77			12			
			2.00	5.71	.69			13			
			2.15	5.66	.64			14			
			2.30	5.61	.59			15			
			2.45	5.57	.55			16			
			3.00	5.53	.51			17			
			3.15	5.50	.48			18			
			3.30	5.46	.44			19			
			3.45	5.42	.40			20			
			4.00	5.40	.38			22			
			4.15	5.37	.35			24			
			4.30	5.35	.33			26			
			4.45	5.31	.29			28			
			5.00	5.31	.29			30			
			5.30	5.27	.25						
			6.00	5.24	.22						
			6.30	5.21	.19						

1) Dewatering Correction 2) Equivalent Artesian Drawdown 3) pH, Spec. Cond., Temp., Weather, Sand, Turbidity, etc.

SYRACUSE CHINA LANDFILL SLUG TEST MW-1

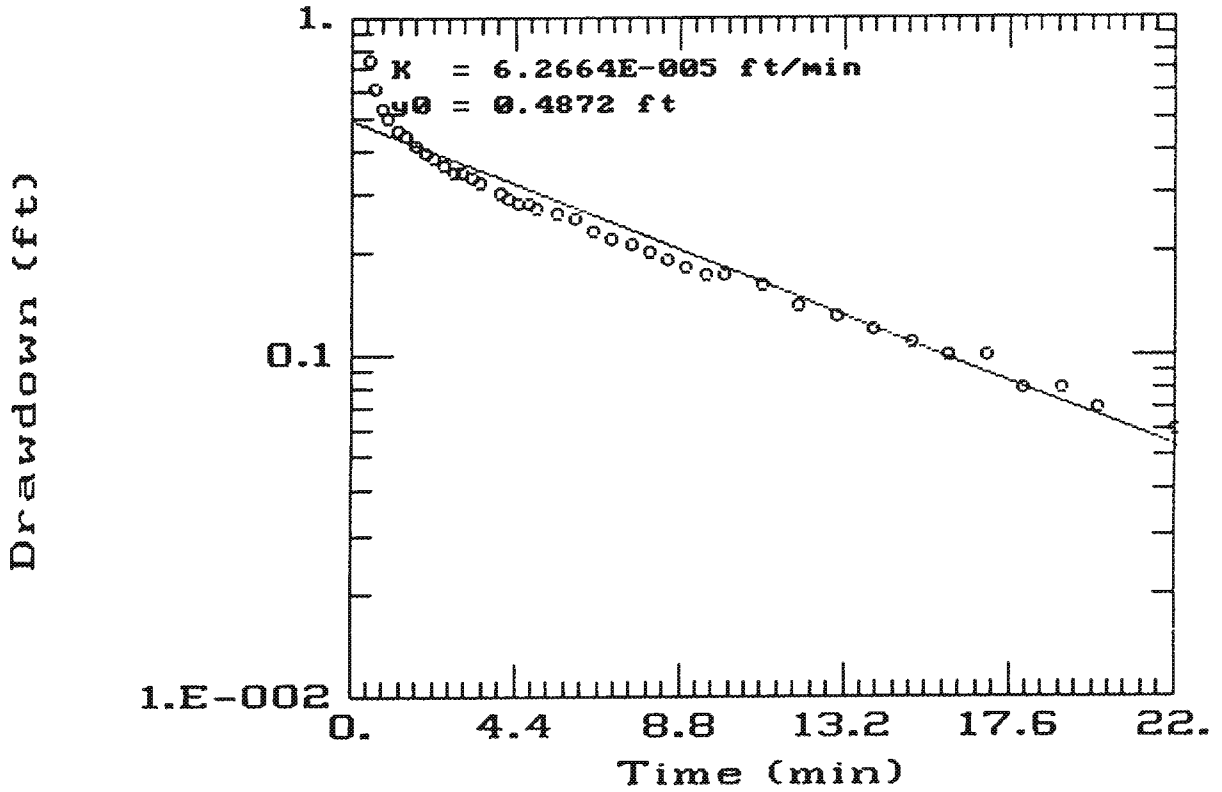

AQTESOLV

GERAGHTY & MILLER, INC.
Modeling Group

ED_006185_00000992-00159

SYRACUSE CHINA LANDFILL SLUG TEST MW-2

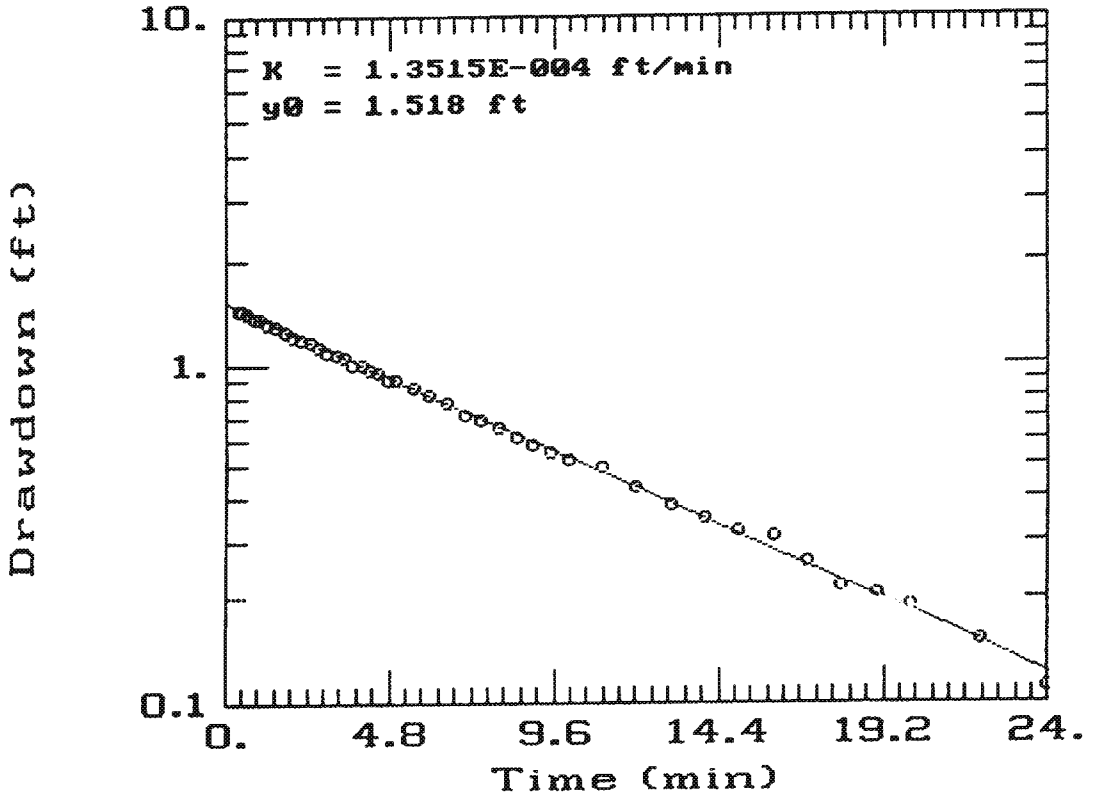

AQTESOLV

GERAGHTY & MILLER, INC.
Modeling Group

ED_006185_00000992-00160

SYRACUSE CHINA LANDFILL SLUG TEST MW-3

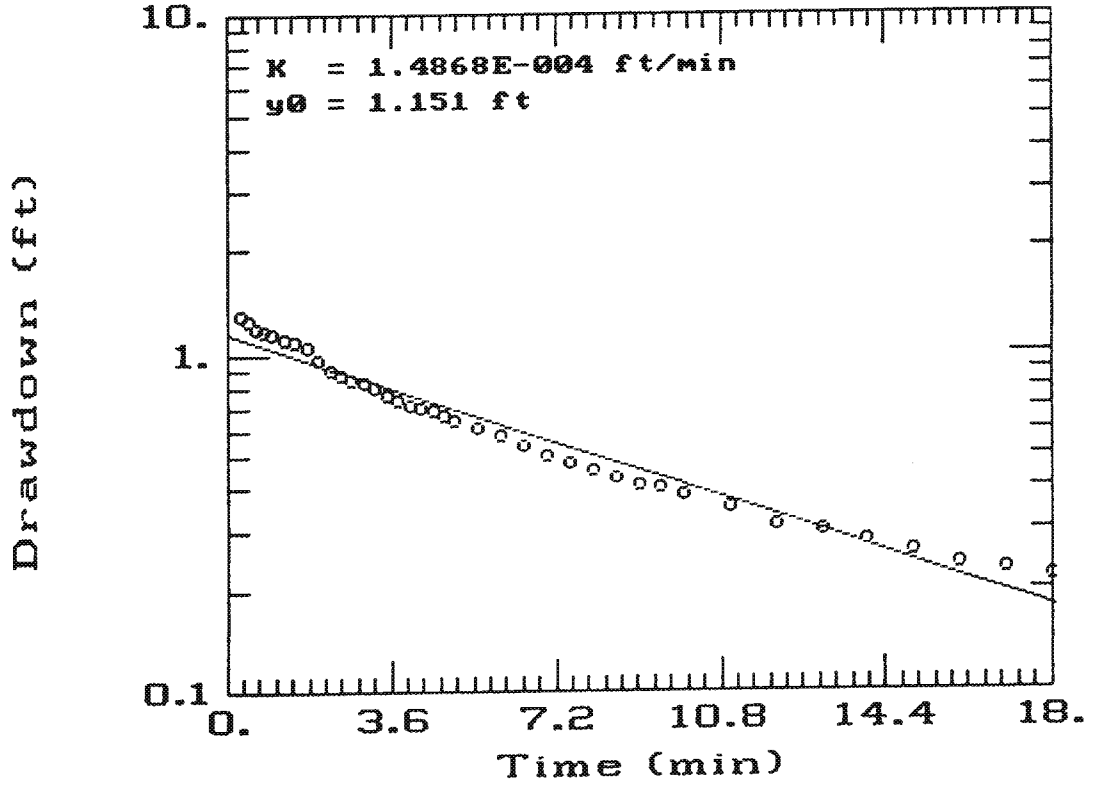

AQTESOLV

GERAGHTY & MILLER, INC.
Modeling Group

ED_006185_00000992-00161

SYRACUSE CHINA LANDFILL SLUG TEST MW-4

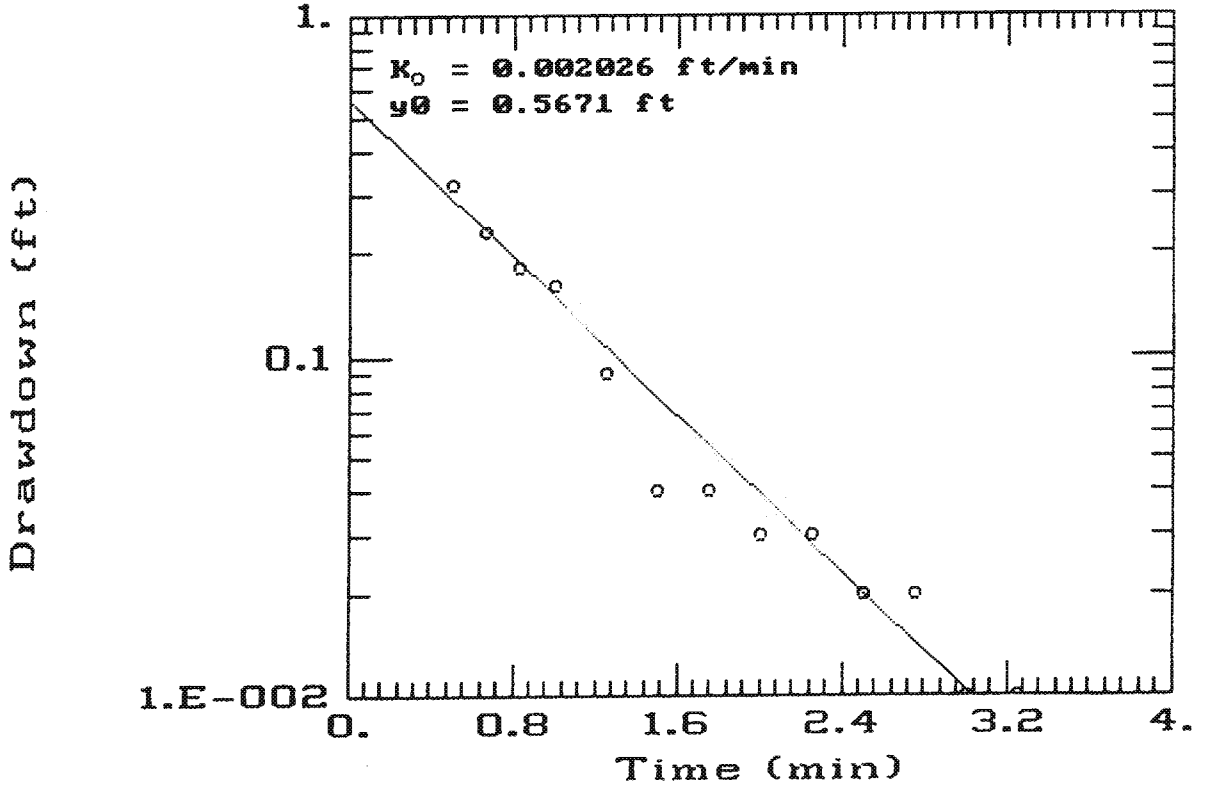

AQTESOLV

GERAGHTY & MILLER, INC.
Modeling Group

ED_006185_00000992-00162

SYRACUSE CHINA LANDFILL SLUG TEST MW-4I

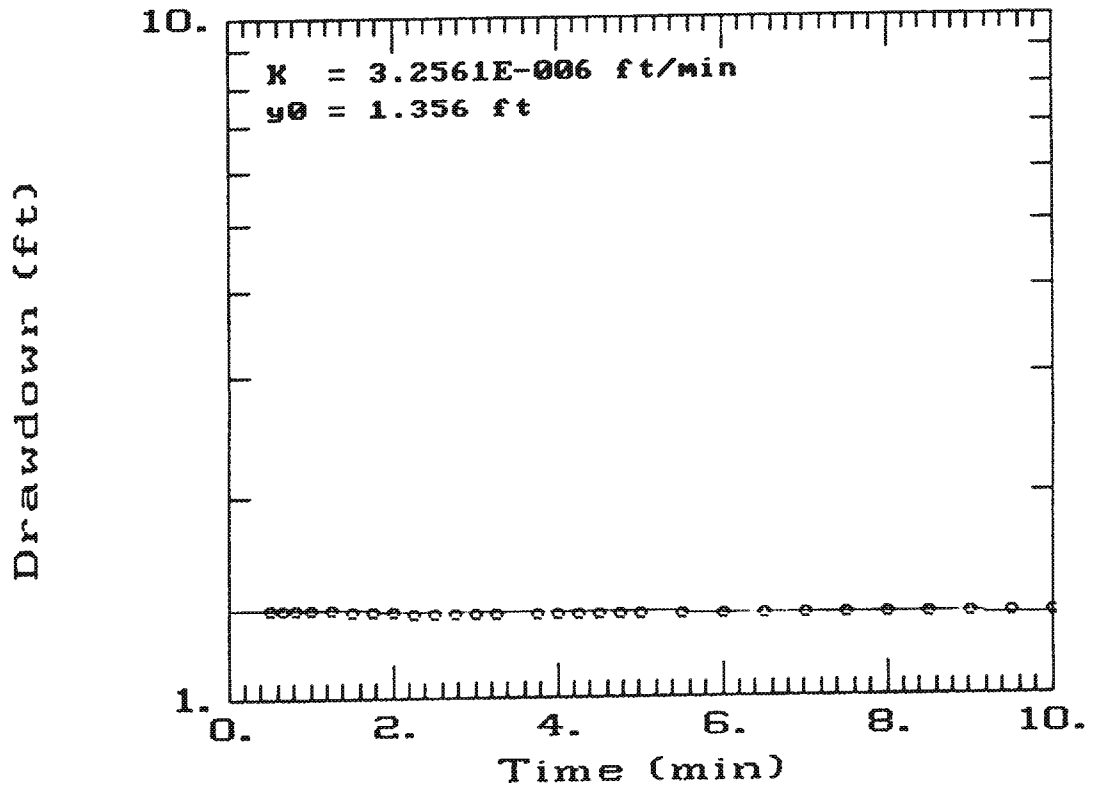

AQTESOLV

GERAGHTY & MILLER, INC.
Modeling Group

ED_006185_00000992-00163

SYRACUSE CHINA LANDFILL SLUG TEST MW-5

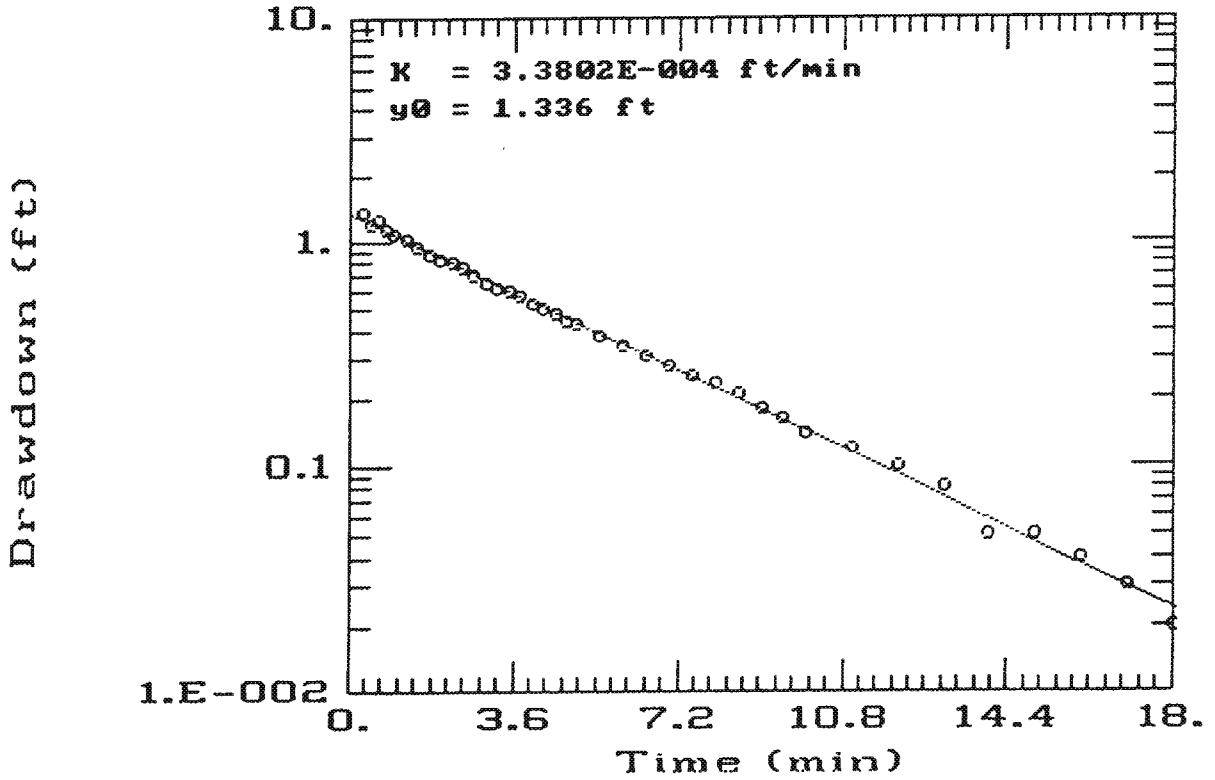

AQTESOLV

GERAGHTY & MILLER, INC.
Modeling Group

ED_006185_00000992-00164

SYRACUSE CHINA LANDFILL SLUG TEST MW-6

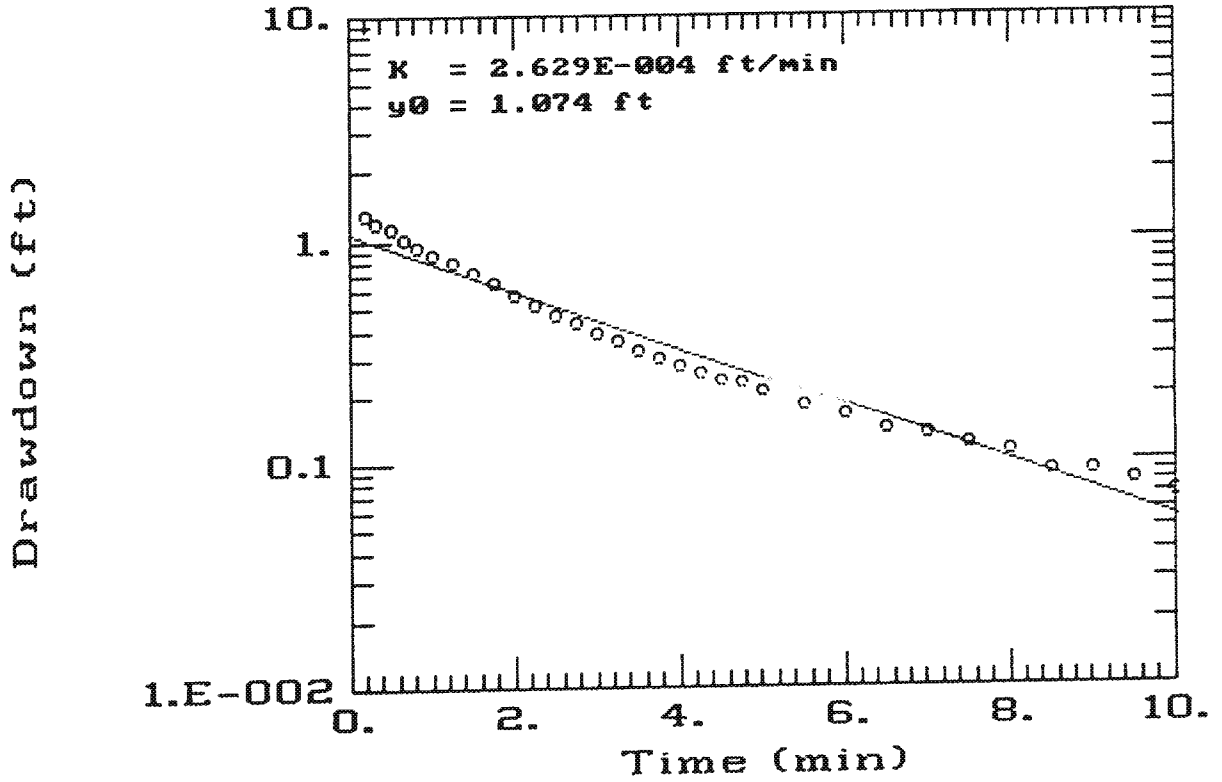

AQTESOLV

GERAGHTY & MILLER, INC.
Modeling Group

ED_006185_00000992-00165

SYRACUSE CHINA LANDFILL SLUG TEST MW-7

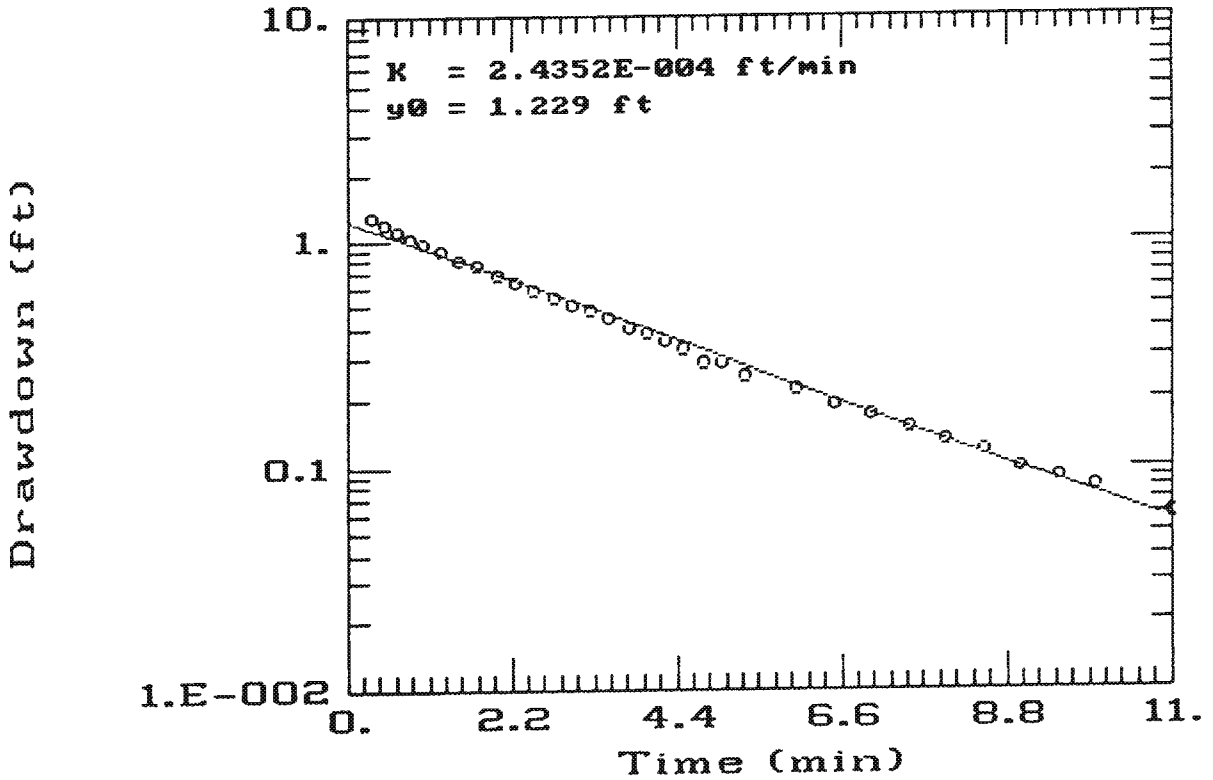

AQTESOLV

GERAGHTY & MILLER, INC.
Modeling Group

ED_006185_00000992-00166

APPENDIX F

DATA VALIDATION

MEMORANDUM

TO: Marc Sanford

FROM: Lisa Westbay

DATE: September 11, 1995

SUBJECT: Inorganic Data Validation of Samples Collected at the Syracuse China Site, Syracuse, New York (Project No. AY0146.017).

Groundwater, surface water, and sediment samples were collected at the Syracuse China site located in Syracuse, New York. The samples were sent to Industrial and Environmental Analysts, Inc. (IEA) in Monroe, Connecticut for the analysis of target analyte list (TAL) metals and cyanide. Analyses were performed following the United States Environmental Protection Agency (USEPA) Contract Laboratory Program (CLP) Statement of Work (SOW) for Inorganics as specified in the New York State Department of Environmental Conservation (NYSDEC) Analytical Services Protocol (ASP) dated September 1989, revised December 1991.

Validation of the laboratory data was performed following the quality assurance/quality control (QA/QC) criteria set forth in the "USEPA Laboratory Data Validation Functional Guidelines for Evaluating Inorganic Analyses" dated July 1988 and the NYSDEC ASP. Eight groundwater samples, one field duplicate, one field blank, eight surface water, and nine sediment samples were sent to IEA for analysis. The quality of the data was acceptable with the appropriate qualifications described in this memorandum.

INORGANIC DATA VALIDATION SUMMARY

Two data packages (sample delivery groups [SDGs]) were provided by the laboratory for metal and cyanide sample results. The validation results for each SDG are discussed separately below.

SDG Z1154 RESULTS - TOTAL METALS

Sample results for nine groundwater samples (including one field duplicate), six surface water (two samples were analyzed for lead only), and five sediment samples (one was analyzed for lead only) were reported in this SDG.

Holding Times

All samples were analyzed within holding time requirements.

Calibration

The initial and continuing calibration requirements were met.

Blanks

The following analytes were detected in the Field Blank (reported in SDG A1154):

Analysis Date	Analyte	Concentration (ug/L)
August 21, 1995	Aluminum	28.0 B
August 21, 1995	Calcium	202 B
August 21, 1995	Iron	70.1 B
August 21, 1995	Lead	3.0 B
August 21, 1995	Magnesium	50.4 B
August 21, 1995	Manganese	2.0 B
August 21, 1995	Nickel	7.8 B
August 21, 1995	Zinc	27.6

New, disposable bailers were used to collect groundwater samples at each monitoring well except at MW-4I and MW-7, where reusable Teflon bailers were used. Therefore, only results for locations MW-4I and MW-7 are subject to qualification due to field blank results. The following sample results were qualified as non-detect (U) based on field blank results:

Sample ID	Analyte	Concentration (ug/L)
MW-7	Nickel	21.2 U
MW-7	Zinc	75.7 U

The following analytes were detected in the initial calibration blanks (ICBs):

Analysis Date	Analyte	Concentration (ug/L)
August 21, 1995	Calcium	8.0 B
August 30, 1995	Magnesium	7.9 B

The following analytes were detected in the continuing calibration blanks (CCBs):

Analysis Date	CCB#	Analyte	Concentration (ug/L)
August 21, 1995	1	Iron	19.9 B
August 21, 1995	1	Magnesium	19.7 B
August 21, 1995	1	Silver	2.0 B
August 21, 1995	2	Copper	6.7 B
August 21, 1995	2	Iron	11.6 B
August 21, 1995	3	Aluminum	24.5 B
August 21, 1995	3	Calcium	25.0 B
August 21, 1995	3	Copper	6.7 B
August 21, 1995	3	Iron	19.8 B
August 21, 1995	3	Vanadium	1.4 B
August 21, 1995	4	Calcium	53.2 B
August 21, 1995	4	Iron	13.9 B
August 21, 1995	5	Copper	6.1 B
August 21, 1995	5	Vanadium	1.2 B
August 21, 1995	6	Copper	3.6 B
August 21, 1995	6	Iron	19.3 B
August 21, 1995	6	Magnesium	19.8 B
August 21, 1995	6	Vanadium	1.2 B
August 28, 1995	7	Aluminum	25.2 B
August 28, 1995	7	Calcium	19.7 B
August 28, 1995	7	Magnesium	15.7 B
August 28, 1995	8	Aluminum	91.8 B
August 28, 1995	8	Iron	16.4 B
August 28, 1995	8	Magnesium	15.6 B
August 28, 1995	8	Potassium	40.9 B
August 28, 1995	9	Aluminum	47.3 B
August 28, 1995	9	Calcium	36.0 B
August 28, 1995	9	Magnesium	30.7 B
August 30, 1995	10	Aluminum	23.4 B
August 30, 1995	10	Calcium	20.2 B
August 30, 1995	10	Magnesium	20.5 B
August 30, 1995	11	Aluminum	34.8 B
August 30, 1995	11	Calcium	24.1 B
August 30, 1995	11	Magnesium	23.0 B

The following analytes were detected in the aqueous preparation blank (PB):

Analysis Date	Analyte	Concentration (ug/L)
August 21, 1995	Calcium	9.870 B
August 21, 1995	Copper	4.610 B
August 21, 1995	Iron	12.040 B

The following sample results were qualified as non-detect (U) based on blank results:

Sample ID	Analyte	Concentration (ug/L)
MW-1	Copper	18.0 U
MW-1	Vanadium	1.6 U
MW-2	Copper	27.6 U
MW-4	Copper	14.9 U
MW-5	Copper	7.1 U
MW-5	Vanadium	2.3 U
SW-1	Copper	15.7 U
SW-1	Vanadium	7.1 U
SW-2	Copper	12.8 U
SW-3	Copper	6.5 U
SW-4	Copper	9.0 U

Inductively Coupled Plasma Interference Check Sample

The percent recoveries for inductively coupled plasma (ICP) interference check sample (ICS) analyses were within the control limits of ±20% of the true value, with the following exceptions in the final solution AB:

Analysis Date	Analyte	%R
August 21, 1995	Chromium	79.7
August 21, 1995	Cobalt	78.2
August 21, 1995	Manganese	78.7
August 21, 1995	Nickel	78.0

The following sample results were qualified as estimated (J) due to ICP results:

Sample ID	Analyte	Concentration (ug/L)
MW-3	Calcium	656,000 J
MW-4I	Calcium	792,000 J

Laboratory Control Sample

Laboratory control sample (LCS) results were within the control limits.

Duplicate Sample Analysis

Two samples were designated for duplicate analysis. The relative percent difference (RPD) values for each were within the control limits.

Matrix Spike Sample Analysis

Two samples were designated for matrix spike sample analysis. The percent recoveries (%R) were within the control limits, with the following exceptions:

Sample ID	Analyte	%R
SED-1	Antimony	42.9
SED-1	Mercury	179.0
SED-1	Zinc	74.8
SED-1	Cyanide	20.6

The following data were estimated (J or UJ) due to matrix spike results:

Sample ID	Analyte	Concentration (mg/kg)
SED-1	Antimony	2.4 UJ
SED-1	Zinc	599 J
SED-2	Antimony	4.2 BJ
SED-2	Zinc	796 J
SED-3	Antimony	4.3 UJ
SED-3	Zinc	722 J
SED-4	Antimony	6.3 UJ
SED-4	Zinc	775 J

Mercury was not detected in the associated samples; therefore, qualification of the mercury data were not necessary. Cyanide results in associated samples were rejected due to low (<30%) matrix spike recovery.

A post digestion spike was performed for antimony, zinc, and cyanide. The spike recoveries were within the control limits.

Furnace Atomic Absorption Quality Control

The method of furnace atomic absorption was not used for analysis of samples in this package.

Inductively Coupled Plasma Serial Dilution

Samples SED-1 and SW-1 were designated for ICP serial dilution analysis. The ICP serial dilution results were within the control limits, with the following exceptions:

Sample ID	Analyte	%D
SW-1	Magnesium	12.9
SW-1	Sodium	10.6

Due to high percent differences (>10%), magnesium and sodium results in associated samples (aqueous samples), were qualified as estimated (J or UJ).

Sample Result Verification

Discrepancies were not found between the reported results and the QC data package.

Field Duplicate

A field duplicate was collected at location MW-6 and labelled Rep-1. The following analytes were detected in the sample and duplicate collected from sampling location MW-6, along with the corresponding RPD value:

Analyte	Sample MW-6 Concentration (ug/L)	Replicate Concentration (ug/L)	%RPD
Aluminum	41600	46600	11
Arsenic	27.6	35.6	25
Barium	545	541	1
Beryllium	5.4	7.2	29
Calcium	477000	518000	8
Chromium	76.4	87.6	14
Cobalt	60.2	63.0	4
Copper	276	260	6
Iron	85100	95500	12
Lead	56.5	56.9	1
Magnesium	158000	179000	12
Manganese	2790	3080	10
Mercury	0.20 B	0.20 U	0
Nickel	106	119	12
Potassium	10100	10100	0
Selenium	6.0	6.9	14
Silver	41.8	4.0 B	165
Sodium	19300	21700	12
Vanadium	56.9	58.1	2
Zinc	342	342	0

Based on the field duplicate results, it is this data reviewer's professional opinion that because the silver RPD value is high, all positive silver results for the aqueous samples should be qualified as estimated (J), including the results reported in SDG A1154. It is also this data reviewer's opinion that further qualification of the data was not necessary based on the field duplicate results.

Overall Assessment of Data for the Case

The quality of the inorganic data presented in this QC data package is acceptable with the appropriate qualifications described in this memorandum.

SDG Z1154 RESULTS - DISSOLVED METALS

Sample results for nine groundwater samples (including one field duplicate) were reported in this SDG.

Holding Times

All samples were analyzed within holding time requirements.

Calibration

The initial and continuing calibration requirements were met.

Blanks

The field blank was not analyzed for dissolved metals. Therefore, the data were evaluated against initial, continuing, and preparation blanks only. The following analytes were detected in the ICBs:

Analysis Date	Analyte	Concentration (ug/L)
August 23, 1995	Aluminum	23.0 B
August 23, 1995	Magnesium	7.0 B

The following analytes were detected in the CCBs:

Analysis Date	CCB#	Analyte	Concentration (ug/L)
August 28, 1995	1	Aluminum	36.0 B
August 28, 1995	1	Calcium	18.2 B
August 28, 1995	1	Copper	-2.1 B
August 28, 1995	1	Magnesium	17.9 B
August 28, 1995	2	Aluminum	25.8 B
August 28, 1995	2	Beryllium	1.6 B
August 28, 1995	2	Copper	-2.5 B

Analysis Date	CCB#	Analyte	Concentration (ug/L)
August 28, 1995	2	Magnesium	9.1 B
August 28, 1995	2	Potassium	33.6 B
August 28, 1995	2	Vanadium	12.0 B
August 28, 1995	3	Aluminum	40.0 B
August 28, 1995	3	Beryllium	2.0 B
August 28, 1995	3	Copper	-3.5 B
August 28, 1995	3	Magnesium	10.2 B
August 28, 1995	3	Vanadium	5.9 B
August 28, 1995	4	Aluminum	59.3 B
August 28, 1995	4	Beryllium	1.8 B
August 28, 1995	4	Calcium	23.8 B
August 28, 1995	4	Copper	-3.8 B
August 28, 1995	4	Magnesium	22.9 B

The following analytes were detected in the preparation blank (PBs):

Analysis Date	Analyte	Concentration (ug/L)
August 23, 1995	Aluminum	22.714 B

The following sample results were qualified as non-detect (U) based on blank results:

Sample ID	Analyte	Concentration (ug/L)
MW-2	Copper	3.8 U
MW-6	Vanadium	3.0 U
MW-7	Vanadium	8.3 U
MW-4I	Beryllium	1.3 U
MW-4I	Copper	2.7 U
MW-4I	Vanadium	15.3 U
Rep-1	Beryllium	1.2 U
Rep-1	Vanadium	3.7 U

Inductively Coupled Plasma Interference Check Sample

The percent recoveries for ICP ICS analyses were within the control limits.

Laboratory Control Sample

LCS results were within the control limits.

Duplicate Sample Analysis

One water sample was designated for duplicate analysis. The RPD values were within the control limits.

Matrix Spike Sample Analysis

One water sample was designated for matrix spike sample analysis, in which the percent recoveries were within the control limits.

Furnace Atomic Absorption Quality Control

The method of furnace atomic absorption was not used for analysis of samples in this package.

Inductively Coupled Plasma Serial Dilution

Sample MW-4 was designated for ICP serial dilution analysis. The ICP serial dilution results were within the control limits, with the following exception:

Sample ID	Analyte	%D
MW-4L	Calcium	10.4

Calcium results in associated data were qualified as estimated (J) due to ICP serial dilution results.

Sample Result Verification

Discrepancies were not found between the reported results and the QC data package.

Field Duplicate

A field duplicate was collected at location MW-6 and labelled Rep-1. The following analytes were detected in the sample and duplicate collected from sampling location MW-6, along with the corresponding RPD value:

Analyte	Sample MW-6 Concentration (ug/L)	Replicate Concentration (ug/L)	%RPD
Aluminum	3040	4320	35
Antimony	4.0 B	3.9 B	3
Barium	93.4 B	111 B	17
Beryllium	1.0 U	1.2 B	100
Calcium	92200	90000	2
Chromium	4.7 B	6.2 B	28
Iron	2090	2950	34
Lead	3.6	3.2	12
Magnesium	20500	23400	13
Manganese	121	152	23
Nickel	5.0 B	7.6 B	41

Analyte	Sample MW-6 Concentration (ug/L)	Replicate Concentration (ug/L)	%RPD
Potassium	2660	3480	27
Sodium	17400	15200	13
Vanadium	3.0 B	3.7 B	21
Zinc	56.6	15.0 B	116

Based on the field duplicate results, it is this data reviewer's professional opinion that because the zinc RPD value is high, all positive zinc results in the associated samples should be qualified as estimated (J). It is also this data reviewer's opinion that further qualification of the data was not necessary based on the field duplicate results.

Overall Assessment of Data for the Case

The quality of the inorganic data presented in this QC data package is acceptable with the appropriate qualifications described in this memorandum.

SDG A1154 RESULTS

Sample results for two surface-water samples, four sediment samples (two were analyzed for lead only), and one field blank are reported in SDG A1154. The validation results for SDG A1154 are discussed below.

Holding Times

All samples were analyzed within holding time requirements.

Calibration

The initial and continuing calibration requirements were met.

Blanks

The following analytes were detected in the Field Blank:

Analysis Date	Analyte	Concentration (ug/L)
August 21, 1995	Aluminum	28.0 B
August 21, 1995	Calcium	202 B
August 21, 1995	Iron	70.1 B
August 21, 1995	Lead	3.0 B
August 21, 1995	Magnesium	50.4 B
August 21, 1995	Manganese	2.0 B
August 21, 1995	Nickel	7.8 B
August 21, 1995	Zinc	27.6

The following analytes were detected in the ICBs:

Analysis Date	Analyte	Concentration (ug/L)
August 21, 1995	Calcium	8.0 B
August 30, 1995	Magnesium	7.9 B

The following analytes were detected in the CCBs:

Analysis Date	CCB#	Analyte	Concentration (ug/L)
August 21, 1995	1	Iron	19.9 B
August 21, 1995	1	Magnesium	19.7 B
August 21, 1995	1	Silver	2.0 B
August 21, 1995	2	Copper	6.7 B
August 21, 1995	2	Iron	11.6 B
August 21, 1995	3	Aluminum	24.5 B
August 21, 1995	3	Calcium	25.0 B
August 21, 1995	3	Copper	6.7 B
August 21, 1995	3	Iron	19.8 B
August 21, 1995	3	Vanadium	1.4 B
August 21, 1995	4	Calcium	53.2 B
August 21, 1995	4	Iron	13.9 B
August 21, 1995	5	Copper	6.1 B
August 21, 1995	5	Vanadium	1.2 B
August 21, 1995	6	Copper	3.6 B
August 21, 1995	6	Iron	19.3 B
August 21, 1995	6	Magnesium	19.8 B
August 21, 1995	6	Vanadium	1.2 B
August 28, 1995	7	Aluminum	25.2 B
August 28, 1995	7	Calcium	19.7 B
August 28, 1995	7	Magnesium	15.7 B
August 28, 1995	8	Aluminum	91.8 B
August 28, 1995	8	Iron	16.4 B
August 28, 1995	8	Magnesium	15.6 B
August 28, 1995	8	Potassium	40.9 B
August 28, 1995	9	Aluminum	47.3 B
August 28, 1995	9	Calcium	36.0 B
August 28, 1995	9	Magnesium	30.7 B
August 30, 1995	10	Aluminum	23.4 B
August 30, 1995	10	Calcium	20.2 B
August 30, 1995	10	Magnesium	20.5 B
August 30, 1995	11	Aluminum	34.8 B
August 30, 1995	11	Calcium	24.1 B
August 30, 1995	11	Magnesium	23.0 B

The following analytes were detected in the PBs:

Analysis Date	Analyte	Concentration (ug/L)
August 21, 1995	Calcium	9.870 B
August 21, 1995	Copper	4.610 B
August 21, 1995	Iron	12.040 B

The following sample results were qualified as non-detect (U) based on blank results:

Sample ID	Analyte	Concentration (ug/L)
SW-5	Copper	8.1 U
SW-5	Zinc	46.7 U
SW-6	Copper	8.6 U
SW-6	Vanadium	4.0 U

Inductively Coupled Plasma Interference Check Sample

The percent recoveries for all ICP ICS analyses were within the control limits of ±20% of the true value, with the following exceptions:

Analysis Date	Analyte	%R
August 21, 1995	Chromium	79.7
August 21, 1995	Cobalt	78.2
August 21, 1995	Manganese	78.7
August 21, 1995	Nickel	78.0

Since the associated samples contained aluminum, calcium, iron, and magnesium in concentrations at least one order of magnitude less than their respective levels in the interference check sample, qualification of the data was not necessary.

Laboratory Control Sample

LCS results were within the control limits.

Duplicate Sample Analysis

Samples SED-1 and SW-1 were designated for duplicate analysis. The RPD values for each were within the control limits.

Matrix Spike Sample Analysis

Samples SED-1 and SW-1 were designated for matrix spike sample analysis. The percent recoveries (%R) were within the control limits, with the following exceptions:

Sample ID	Analyte	%R
SED-1	Antimony	42.9
SED-1	Mercury	179.0
SED-1	Zinc	74.8
SED-1	Cyanide	20.6

Antimony was not detected in the associated samples, and therefore the associated results were qualified as estimated (UJ). Due to high mercury and low zinc spike recoveries, positive mercury and zinc results were qualified as estimated (J). Cyanide was not detected in the associated samples, and therefore, the results were qualified as unusable (R).

A post digestion spike was performed for antimony, zinc, and cyanide. The spike recoveries were within the control limits.

Furnace Atomic Absorption Quality Control

The method of furnace atomic absorption was not used for analysis of samples in this package.

Inductively Coupled Plasma Serial Dilution

Samples SED-5 and SW-5 were designated for the ICP serial dilution analysis. The ICP serial dilution results were within the control limits.

Sample Result Verification

Discrepancies were not found between the reported results and the QC data package.

Field Duplicate

The field duplicate was not reported in this data package.

Overall Assessment of Data for the Case

The quality of the inorganic data presented in this QC data package is acceptable with the appropriate qualifications described in this memorandum.

MEMORANDUM

TO: William Gray

FROM: Lauren Sjogren

DATE: March 31, 1995

SUBJECT: Inorganic Data Validation of Samples Collected for the Syracuse China Site located in Syracuse, New York (Project No. AY0146.004).

Soil samples were collected for the Syracuse China site located in Syracuse, New York. The samples were sent to Industrial and Environmental Analysts, Inc. (IEA) in Monroe, Connecticut for the analysis of target analyte list (TAL) metals and cyanide following the United States Environmental Protection Agency (USEPA) Contract Laboratory Program (CLP) Statement of Work (SOW) for Inorganics as specified in the New York State Department of Environmental Conservation (NYSDEC) Analytical Services Protocol (ASP) dated September 1989, revised December 1991.

Validation of the laboratory data was performed following the quality assurance/quality control (QA/QC) criteria set forth in the "USEPA Laboratory Data Validation Functional Guidelines for Evaluating Inorganics Analyses" dated July, 1988 and the NYSDEC ASP. Twenty-six soil samples, one field duplicate, six field blanks and five trip blanks were sent to IEA for analysis. Sample identification, collection dates, and laboratory received dates are listed in Tables 1 and 2. The quality of the data was acceptable with the appropriate qualifications described in this memorandum.

INORGANIC DATA VALIDATION SUMMARY

Two data packages (sample delivery groups [SDGs]) were provided by the laboratory for metal sample results. The validation results for each SDG are discussed separately below.

SDG Z1368 RESULTS

Ten soil samples are contained in SDG Z1368. These samples were collected on November 28, November 30, December 1, December 2, and December 6, 1994 and received by the laboratory within 48 hours of collection. The validation results for SDG Z1368 are discussed below.

Holding Times

All samples were analyzed within holding time requirements.

Calibration

The correlation coefficients for the lead initial calibrations conducted on December 14, December 15, and December 16, 1994 using graphite furnace atomic absorption spectroscopy (GFAA) were found to be < 0.995. Therefore, because lead was detected the samples analyzed using GFAA, the positive lead results for samples MW-6, MW-7, MW-3I, MW-4I, PSB-5, PSB-4, PSB-1, and PSB-2, were qualified as estimated (J). All other initial and all continuing calibration requirements were met.

Blanks

The following analytes were detected in the initial calibration blanks (ICBs) analyzed:

Analysis DateAnalyte	Concentration (ug/L)	
December 14, 1994	Aluminum	20.2 B
December 14, 1994	Copper	-2.2 B
December 14, 1994	Zinc	-3.1 B
December 14, 1994	Selenium	1.0 B

The "B" qualifier indicates that the concentration detected is between the contract required detected limit (CRDL) and the instrument detection limit (IDL). Because the negative concentration of copper and zinc was not recorded below the negative CRDL for these analytes, in this data reviewer's professional judgement that qualification of the associated copper and zinc sample results was not necessary. Selenium was not detected in any of the samples associated with the positive selenium CCB result. Aluminum was detected in all the samples at concentrations that are above five times the ICB concentrations, therefore, qualification of the aluminum sample results based on the ICB results was not necessary.

The following analytes were detected in the continuing calibration blanks (CCBs) analyzed:

Analysis Date	CCB #	Analyte	Concentration (ug/L)
December 14, 1994	1	Aluminum	21.1 B
December 14, 1994	1	Iron	59.8 B
December 14, 1994	1	Magnesium	37.1 B
December 14, 1994	1	Zinc	-3.7 B
December 14, 1994	2	Copper	-2.8 B
December 14, 1994	2	Zinc	-4.3 B
December 14, 1994	3	Zinc	-4.3 B
December 14, 1994	4	Aluminum	21.8 B
December 14, 1994	4	Copper	-2.2 B
December 14, 1994	4	Iron	59.8 B
December 14, 1994	4	Magnesium	58.9 B
December 14, 1994	4	Zinc	-4.3 B
December 14, 1994	2	Arsenic	-1.1 B
December 14, 1994	4	Selenium	1.2 B

Because the negative concentrations for the analytes listed above were not recorded below the corresponding negative CRDL for these analytes, in this data reviewer's professional judgement that qualification of the sample results based on these CCB results was not necessary. Selenium was not detected in any of the samples associated with the positive selenium ICB result. Aluminum, iron, and magnesium were detected in all the samples at concentrations that are above five times the CCB concentrations for these three analytes, therefore, qualification of the aluminum, iron, and/or magnesium sample results based on the CCB results was not necessary.

The following analytes were detected in preparation blank (PB) analyzed:

Analyte	Concentration (ug/L)
Aluminum	5.7 B
Calcium	24.3 B
Chromium	0.52 B
Copper	2.4 B
Iron	8.9 B
Magnesium	9.0 B

The following copper sample results were qualified as not detected based on the associated PB result:

Analyte	Concentration (ug/L)
MW-3I	8.4 U
MW-4I	7.7 U
PSS-11	6.3 U
PSB-5	10.6 U
PSB-4	10.2 U
PSB-3	7.9 U

The other analytes detected in the PB were also detected in the samples at concentrations greater than five times the PB concentrations. Therefore, further qualification of the sample results based on the PB results was not necessary. No analytes were detected in any of the other blanks. Field blanks were not required for this sampling round.

Inductively Coupled Plasma Interference Check Sample

The percent recoveries for all inductively coupled plasma interference check sample (ICS) analyses were within the control limits of ± 20% of the true value.

Laboratory Control Sample

All laboratory control sample (LCS) results were within the control limits.

Duplicate Sample Analysis

Two samples were designated for the duplicate analysis. The chromium relative percent difference (RPD) value was above the control limit for the sample and duplicate collected at MW-6. The calcium, magnesium, and manganese RPD values were above the control limits for the sample and duplicate collected at PSB-5. Therefore, all chromium, calcium, magnesium, and manganese sample results were qualified as estimated (J) if detected and estimated (UJ) if not detected. A sample and duplicate were analyzed for lead using inductively coupled plasma emission spectroscopy (ICP) with the results found to be within the control limits. This duplicate is contained in SDG A1368. All other duplicate sample results were also within the control limits.

Matrix Spike Sample Analysis

Two samples were designated for the matrix spike sample analysis. Low antimony and cyanide matrix spike recoveries of 67.6%, and 72.1%, respectively, were reported for MW-6. Low antimony and high manganese matrix spike recoveries of 67.4%, and 157.1%, respectively, were reported for PSB-5. Therefore, all postive antimony, cyanide, and manganese sample results were qualified as estimated (J) and all non-detect antimony, and cyanide sample results were qualified as estimated (UJ). A matrix spike sample was analyzed for lead using ICP with the results found to be

within the control limits. This matrix spike sample is contained in SDG A1368. All other matrix spike recoveries were within the control limits.

Furnace Atomic Absorption Quality Control

The majority of samples were analyzed for arsenic, lead, selenium, and thallium using GFAA. The arsenic post-digestion spike recovery for sample PSB-3 was found to be below the control limits with a recovery of 51.5%. Therefore, the arsenic detected in sample PSB-3 was qualified as estimated (J). Several sample results were determined by the method of standard additions (MSA). Lead was measured in sample MW-3I by MSA twice with both correlation coefficients found to be < 0.995. Therefore, the lead detected in sample MW-3I was qualified as estimated (J). All other GFAA quality control criteria requirements were met.

Inductively Coupled Plasma Serial Dilution

Sample MW-6 was used for the ICP serial dilution analysis. All ICP serial dilution results were within the control limits.

Sample Result Verification

No discrepancies were found between the reported results and the QC data package.

Field Duplicate

Soil field duplicates were not required.

Overall Assessment of Data for the Case

The quality of the inorganic data presented in this QC data package is acceptable with the appropriate qualifications described in this memorandum.

SDG A1368 RESULTS

Seven water samples, seven soil samples, and one water field duplicate are contained in SDG A1368. These samples were collected on December 7, 1994 and received by the laboratory within 48 hours of collection. The validation results for SDG A1368 are discussed below.

Holding Times

All samples were analyzed within holding time requirements.

Calibration

The correlation coefficient for the lead initial calibration conducted on December 16, 1994 using GFAA was found to be < 0.995. Therefore, the positive lead results for associated samples PSW-7, and PSW-12, were qualified as estimated (J). The sodium percent recovery was above control limits (116.7%) for the fourth continuing calibration verfication standard (CCV) analyzed. Because no samples were analyzed after this CCV, qualification of the data was not necessary. All other initial and all continuing calibration requirements were met.

Blanks

The following analytes were detected in the ICBs analyzed:

Analysis Date	Analyte	Concentration (ug/L)
December 14, 1994	Arsenic	-1.8 B
December 21, 1994	Copper	-5.1 B
December 21, 1994	Vanadium	-8.2 B
December 21, 1994	Zinc	-4.9 B
December 19, 1994	Arsenic	-1.0 B
December 19, 1994	Thallium	1.6 B

Because the negative concentration of arsenic, copper, vanadium and zinc was not recorded below the negative CRDL for these analytes, in this data reviewer's professional judgement that qualification of the associated arsenic, copper, vanadium, and zinc sample results was not necessary. Thallium was not detected in any of the samples associated with the positive thallium ICB result.

The following analytes were detected in the CCBs analyzed:

Analysis Date	CCB #	Analyte	Concentration (ug/L)
December 14, 1994	1	Arsenic	-1.1 B
December 21, 1994	1	Copper	-4.2 B
December 21, 1994	1	Iron	35.9 B
December 21, 1994	1	Magnesium	25.4 B
December 21, 1994	1	Zinc	-5.8 B
December 14, 1994	1	Arsenic	-1.3 B
December 21, 1994	2	Chromium	-5.0 B
December 21, 1994	2	Copper	-3.6 B
December 21, 1994	2	Potassium	-750.4 B
December 21, 1994	2	Selenium	-1.1 B
December 21, 1994	2	Zinc	-6.0 B
December 14, 1994	3	Arsenic	-1.5 B
December 21, 1994	3	Copper	-6.0 B
December 21, 1994	3	Nickel	-8.4 B
December 21, 1994	3	Zinc	-6.3 B
December 14, 1994	4	Arsenic	-1.5 B
December 21, 1994	4	Copper	-5.4 B

December 21, 1994	4	Lead (ICP analysis)	17.4 B
December 21, 1994	4	Nickel	-9.1 B
December 21, 1994	4	Sodium	208.3 B
December 21, 1994	4	Zinc	-6.0 B
December 21, 1994	5	Copper	-4.8 B
December 21, 1994	5	Iron	66.7 B
December 21, 1994	5	Magnesium	53.3 B
December 21, 1994	5	Silver	3.1 B
December 21, 1994	5	Zinc	-6.6 B
December 19, 1994	1	Thallium	1.2 B
December 20, 1994	2	Thallium	1.4 B

Because the negative concentrations for the analytes listed above were not recorded below the corresponding negative CRDL for these analytes, in this data reviewer's professional judgement that qualification of the sample results based on these CCB results was not necessary. The following analytes were qualified as not detected based on the corresponding CCB results:

Sample ID	Analyte	Concentration (ug/L)
PSW-5	Iron	93.1 U
PSW-7	Iron	99.9 U
PSW-8	Iron	97.5 U
PSW-9	Iron	117.0 U

The following analytes were detected in PBs analyzed:

Analyte	Concentration (ug/L)
Aluminum	24.7 B
Iron	20.6 B
Magnesium	25.5 B

Analyte	Concentration (ug/L)
Calcium	18.9 B
Iron	6.2 B
Magnesium	7.5 B
Silver	0.9 B
Sodium	11.7 B
Zinc	1.6 B

Silver	0.9 B
Sodium	11.7 B
Zinc	1.6 B

The following sample results were qualified as not detected based on the corresponding PB results:

Sample ID	Analyte	Concentration (ug/L)	Units
PSW-6	Aluminum	103.0 U	ug/L
PSS-7	Silver	1.5 U	mg/kg
PSS-8	Silver	4.6 U	mg/kg
PSS-9	Silver	3.2 U	mg/kg

The other analytes detected in the PB were not detected in the associated samples or were also detected in the associated samples at concentrations greater than five times the PB concentrations. Therefore, further qualification of the sample results based on the PB results was not necessary. No analytes were detected in any of the other blanks. Field blanks were not required for this sampling round.

Inductively Coupled Plasma Interference Check Sample

The percent recoveries for all inductively coupled plasma interference check sample (ICS) analyses were within the control limits of ± 20% of the true value.

Laboratory Control Sample

All laboratory control sample (LCS) results were within the control limits.

Duplicate Sample Analysis

Two soil samples and one water sample were designated for the duplicate analyses. The water duplicate results, and the soil duplicate result for lead analyzed by ICP are contained in this SDG. The other soil duplicate results are contained in SDG Z1368. The chromium relative percent difference (RPD) value was above the control limit for the soil sample and duplicate collected at MW-6. The calcium, magnesium, and manganese RPD values were above the control limits for the soil sample and duplicate collected at PSB-5. Therefore, all chromium, calcium, magnesium, and manganese soil sample results were qualified as estimated (J) if detected and estimated (UJ) if not detected. All water duplicate sample results, and all other soil duplicate sample results were also within the control limits.

Matrix Spike Sample Analysis

Two soil samples and one water sample were designated for the matrix spike sample analysis. The water matrix spike results, and the soil matrix spike result for lead analyzed by ICP are contained in this SDG. The other soil matrix spike results are contained in SDG Z1368. Low antimony and cyanide soil matrix spike recoveries of 67.6%, and 72.1%, respectively, were reported for MW-6. Low antimony and high manganese soil matrix spike recoveries of 67.4%, and 157.1%, respectively, were reported for PSB-5. Therefore, all postive antimony, cyanide, and manganese soil sample results were qualified as estimated (J) and all non-detect antimony, and cyanide soil sample results were qualified as estimated (UJ). All water matrix spike results, and all other soil matrix spike recoveries were within the control limits.

Furnace Atomic Absorption Quality Control

The majority of samples were analyzed for arsenic, lead, selenium, and thallium using GFAA. All GFAA quality control criteria requirements were met.

Inductively Coupled Plasma Serial Dilution

Soil sample PSS-5 and water sample PSW-9 were used for the ICP serial dilution analyses. For soil sample PSS-5, the intial and serial dilution copper results did not agree within 10%, therefore, copper detected in the soil samples were qualified as estimated (J) and all copper non-detects for the soil samples were qualified as estimated (UJ). All other ICP serial dilution results were within the control limits.

Sample Result Verification

No discrepancies were found between the reported results and the QC data package.

Field Duplicate

A field duplicate from sampling location PSW-8 was collected and labeled Dup. Soil field duplicates were not required. The following analytes were detected in the sample and duplicate collected from sampling location PSW-8 along with the corresponding RPD value:

Analyte	Sample PSW-8 Concentration (ug/L)	Duplicate Concentration (ug/L)	RPD
Aluminum	468	290	47
Barium	58.2 B	45.8 B	24
Calcium	43200	62200	36
Copper	10.2 B	4.8 B	72
Iron	97.5 B	143	38
Lead	19.8	30.8	43
Magnesium	8010	11200	33
Manganese	15.7	18.1	14
Nickel	23.6 B	8.0 U	200
Potassium	1840 B	2600 B	34
Sodium	43800	61400	33
Zinc	48.2	122	87

Based on the field duplicate results, it is this data reviewer's professional opinion that because the zinc RPD value is high, all positive zinc results for the water samples analyzed should be qualified as estimated (J). It is also this data reviewer's opinion that further qualification of the data was not necessary based on the field duplicate results.

Overall Assessment of Data for the Case

The quality of the inorganic data presented in this QC data package is acceptable with the appropriate qualifications described in this memorandum.

g:\chemical\data-val\albany\schina\1994\z1368ino.mem

Table 1. Sample Identification, Collection Dates, and Laboratory Received Dates for Samples Analyzed Under IEA Project Number 3094-Z1368.

Geraghty and Miller, Inc. ID	Laboratory ID	Date Collected	Date Received
FB 112894	1368001	11/28/94	11/30/94
MW-6	1368002	11/28/94	11/30/94
MW-3I	1368003	11/30/94	12/01/94
MW-4I	1368004	11/30/94	12/01/94
FB 113904	1368005	11/30/94	12/01/94
TB 113094	1368006	--	12/01/94
PSS-11	1368007	12/01/94	12/02/94
PBM-1	1368008	12/01/94	12/02/94
PBM-2	1368009	12/01/94	12/02/94
MW-7	1368010	12/01/94	12/02/94
FB 120194	1368011	12/01/94	12/02/94
TB 120194	1368012	--	12/02/94
PSB-51368013	12/02/94	12/05/94	
PSB-41368014	12/02/94	12/05/94	
FB 120294	1368015	12/02/94	12/05/94
TB 120294	1368016	--	12/05/94
PSB-11368017	12/06/94	12/07/94	
PSB-21368018	12/06/94	12/07/94	
PSB-31368019	12/06/94	12/07/94	
TB 120694	1368020	--	12/07/94

Table 2. Sample Identification, Collection Dates, and Laboratory Received Dates for Samples Analyzed Under IEA Project Number 3094-A1368.

Geraghty and Miller, Inc. ID	Laboratory ID	Date Collected	Date Received
FB 120694	1368021	12/06/94	12/07/94
PSW-5	1368022	12/07/94	12/08/94
PSS-51368023	12/07/94	12/08/94	
PSW-7	1368024	12/07/94	12/08/94
PSS-71368025	12/07/94	12/08/94	
PSW-6	1368026	12/07/94	12/08/94
PSS-61368027	12/07/94	12/08/94	
PSS-81368028	12/07/94	12/08/94	
PSW-8	1368029	12/07/94	12/08/94
PSS-91368030	12/07/94	12/08/94	
PSW-9	1368031	12/07/94	12/08/94
PSS-10	1368032	12/07/94	12/08/94
PSW-10	1368033	12/07/94	12/08/94
PSS-12	1368034	12/07/94	12/08/94
PSW-12	1368035	12/07/94	12/08/94
FB 120794	1368036	12/07/94	12/08/94
TB 120794	1368037	--	12/08/94
DUP	1368038	12/07/94	12/08/94

MEMORANDUM

TO: William Gray

FROM: Lauren Sjogren

DATE: March 31, 1995

SUBJECT: Inorganic Data Validation of Groundwater Samples Collected for the Syracuse China Site located in Syracuse, New York (Project No. AY0146.004).

Groundwater samples were collected for the Syracuse China site located in Syracuse, New York. The samples were sent to Industrial and Environmental Analysts, Inc. (IEA) in Monroe, Connecticut for the analysis of target analyte list (TAL) metals and cyanide following the United States Environmental Protection Agency (USEPA) Contract Laboratory Program (CLP) Statement of Work (SOW) for Inorganics as specified in the New York State Department of Environmental Conservation (NYSDEC) Analytical Services Protocol (ASP) dated September 1989, revised December 1991.

Validation of the laboratory data was performed following the quality assurance/quality control (QA/QC) criteria set forth in the "USEPA Laboratory Data Validation Functional Guidelines for Evaluating Inorganics Analyses" dated July 1988, and the NYSDEC ASP. Eight water samples, one field duplicate, one trip blank and one field blank were sent to IEA for analysis. Sample identification, collection dates, and laboratory received dates are listed in Table 1. The quality of the data was acceptable with the appropriate qualifications described in this memorandum.

INORGANIC DATA VALIDATION SUMMARY

One data package (sample delivery group [SDG]) was provided by the laboratory for metal sample results. The validation results for this SDG is discussed below.

SDG Z0018 RESULTS

Samples were collected from eight monitoring wells and sent to the laboratory for the analysis of total and dissolved metals (filtering). Samples are contained in SDG Z0018. These samples were collected on January 5, 1995 and received by the laboratory within 48 hours of collection. The validation results for SDG Z0018 are discussed below.

Holding Times

All samples were analyzed within holding time requirements.

Calibration

The correlation coefficient for the thallium initial calibration conducted on January 26, 1995 using graphite furnace atomic absorption spectroscopy (GFAA) was found to be <0.995. Therefore, the positive thallium results for associated samples MW-6 (total) and MW-3 (total) were qualified as estimated (J), and the non-detect thallium results for associated samples MW-1 (total), MW-5 (total), MW-2 (total), DUP 1 (total), MW-7 (total), MW-4 (total), MW-4I (total), and FB010595 (total) were qualified as estimated (UJ). All other initial and all continuing calibration requirements were met.

Blanks

The following analytes were detected in the initial calibration blanks (ICBs) analyzed:

Analysis Date	Analyte	Concentration (ug/L)
January 26, 1995	Arsenic	-1.0 B
January 26, 1995	Copper	-4.6 B
January 26, 1995	Arsenic	-1.3 B
January 27, 1995	Selenium	1.0 B

The "B" qualifier indicates that the concentration detected is between the contract required detected limit (CRDL) and the instrument detection limit (IDL). Because the negative concentration of arsenic was not recorded below two times the negative IDL; in this data reviewer's professional judgement, qualification of the associated arsenic sample results was not necessary. In this data reviewer's professional judgement, because regular concentrations of copper were recorded below two times regular copper IDL, all positive sample results less than the CRDL were qualified as estimated (J).

The following selenium sample results were qualified as not detected (U) based on the associated ICB result.

Sample ID	Concentration (ug/L)
MW-2 (total)	1.8 U
MW-3 (total)	1.1 U
DUP 1 (total)	1.0 U
MW-4 (total)	1.5 U
MW-4I (total)	2.7 U

The following analytes were detected in the continuing calibration blanks (CCBs) analyzed:

Analysis Date	CCB #	Analyte	Concentration (ug/L)
January 26, 1995	1	Copper	-4.9 B
January 26, 1995	1	Iron	73.2 B
January 26, 1995	1	Magnesium	29.1 B
January 26, 1995	2	Copper	-4.6 B
January 26, 1995	2	Zinc	-3.2 B
January 26, 1995	3	Arsenic	-1.0 B
January 26, 1995	3	Copper	-4.3 B
January 26, 1995	3	Iron	76.5 B
January 26, 1995	3	Magnesium	47.1 B
January 26, 1995	4	Arsenic	-1.0 B
January 26, 1995	4	Calcium	16.8 B
January 26, 1995	4	Copper	-4.3 B
January 26, 1995	4	Iron	28.9 B
January 26, 1995	5	Aluminum	18.7 B
January 26, 1995	5	Calcium	25.6 B
January 26, 1995	5	Copper	-5.2 B
January 26, 1995	5	Iron	88.7 B
January 26, 1995	5	Magnesium	59.4 B
January 26, 1995	1	Arsenic	-1.5 B
January 26, 1995	2	Arsenic	-1.0 B
January 26, 1995	3	Arsenic	-1.3 B
January 26, 1995	4	Arsenic	-1.3 B
January 27, 1995	3	Thallium	1.1 B

The following sample result was qualified as not detected (U) based on the CCB results.

Sample ID	Analyte	Concentration (ug/L)
MW-2 (dissolved)	Iron	18.2 U

Because the negative concentrations for arsenic and zinc listed above were not recorded below two times the corresponding negative IDL for these analytes, in this data reviewer's professional judgement that qualification of the sample results based on these CCB results was not necessary. Thallium was not detected in any of the samples associated with the positive thallium CCB result. Aluminum, calcium, and magnesium were detected in all the associated samples at

concentrations that are above five times the CCB concentrations for these three analytes, therefore, qualification of the aluminum, calcium, and/or magnesium sample results based on the associated CCB results was not necessary. Copper sample results have already been qualified based on the ICB results.

The following analytes were detected in preparation blank (PB) analyzed:

Analyte	Concentration (ug/L)
Iron	37.23 B
Magnesium	24.6 B
Lead (GFAA)	2.8 B

The following sample results were qualified as not detected based on the associated PB results:

Sample ID	Analyte	Concentration (ug/L)
MW-2 (total)	Lead	11.0 U
MW-5 (total)	Lead	6.7 U
MW-4 (dissolved)	Iron	32.4 U
MW-6 (dissolved)	Lead	7.9 U
MW-5 (dissolved)	Lead	3.0 U
MW-3 (dissolved)	Lead	2.2 U
DUP 1 (dissolved)	Lead	3.0 U
MW-7 (dissolved)	Lead	3.7 U
MW-4 (dissolved)	Lead	2.7 U

The magnesium detected in the PB was detected in the samples at concentrations greater than five times the PB concentration. Therefore, further qualification of associated the magnesium sample results, based on the PB results, was not necessary. No analytes were detected in any of the other blanks.

One field blank was collected with the results listed below:

Field Blank FB010595 (total)

Analyte	Concentration (ug/L)
Aluminum	49.2 B
Calcium	709 B
Iron	114
Magnesium	140 B
Manganese	14 B
Sodium	153 B
Zinc	17.4 B

Field Blank FB010595 (dissolved)

Analyte	Concentration (ug/L)
Aluminum	57.5 B
Calcium	856 B
Iron	128
Magnesium	163 B
Manganese	7.0 B
Sodium	51.9 B
Zinc	9.8 B

The following sample results were qualified as not detected (U) based on the associated field blank results:

Sample ID	Analyte	Concentration (ug/L)
MW-1 (total)	Zinc	69.6 U
MW-5 (total)	Zinc	51.2 U
MW-2 (total)	Zinc	66.6 U
MW-7 (total)	Zinc	52.4 U
MW-1 (dissolved)	Manganese	3.4 U
MW-1 (dissolved)	Zinc	47.6 U
MW-5 (dissolved)	Manganese	21.3 U
MW-2 (dissolved)	Aluminum	31.6 U
MW-2 (dissolved)	Zinc	29.7 U
MW-3 (dissolved)	Aluminum	17.4 U
MW-3 (dissolved)	Zinc	38.9 U
DUP 1 (dissolved)	Aluminum	16.9 U
DUP 1 (dissolved)	Zinc	40.9 U

MW-7 (dissolved)	Zinc	36.6 U
MW-4 (dissolved)	Aluminum	34.5 U

Inductively Coupled Plasma Interference Check Sample

The percent recoveries for all inductively coupled plasma interference check sample (ICS) analyses were within the control limits of ± 20% of the true value.

Laboratory Control Sample

All laboratory control sample (LCS) results were within the control limits.

Duplicate Sample Analysis

Sample MW-1 (total) and MW-1 (dissolved) were designated for the duplicate analysis. All duplicate sample results were within the control limits.

Matrix Spike Sample Analysis

Sample MW-1 (total) and MW-1 (dissolved) were designated for the matrix spike sample analysis. All matrix spike recoveries were within the control limits.

Furnace Atomic Absorption Quality Control

The majority of samples were analyzed for arsenic, lead, selenium, and thallium using GFAA. The following post-digestion spike recoveries were found to be below the control limits:

Sample ID	Analyte	Spike Recovery	Qualifier
MW-2 (total)	Arsenic	79.0%	J
MW-4I (dissolved)	Selenium	80.0%	J
MW-2 (total)	Selenium	76.0%	UJ
MW-3 (total)	Selenium	68.0%	UJ
DUP 1 (total)	Selenium	68.0%	UJ
MW-4 (total)	Selenium	66.0%	UJ

Sample ID	Analyte	Spike Recovery	Qualifier
MW-4I (total)	Selenium	68.0%	UJ
MW-6 (total)	Thallium	79.5%	J
MW-2 (total)	Thallium	53.5%	UJ
MW-3 (total)	Thallium	69.0%	J
DUP 1 (total)	Thallium	78.0%	UJ
MW-4 (total)	Thallium	79.0%	UJ
MW-4I (total)	Thallium	79.0%	UJ
MW-5 (dissolved)	Thallium	77.5%	UJ
MW-2 (dissolved)	Thallium	74.0%	UJ
MW-3 (dissolved)	Thallium	82.5%	UJ
DUP 1 (dissolved)	Thallium	81.0%	UJ
MW-7 (dissolved)	Thallium	80.5%	UJ
MW-4 (dissolved)	Thallium	82.0%	UJ
MW-4I (dissolved)	Thallium	64.5%	UJ
MW-3 (dissolved)	Lead	115.5%	None
MW-4 (dissolved)	Lead	115.5%	None
FB010595 (dissolved)	Lead	117.0%	None

Several sample results were determined by the method of standard additions (MSA). Lead was measured in samples MW-4 (total) and MW-4I (total) by MSA twice with all the correlation coefficients found to be < 0.995. Therefore, the lead detected in samples MW-4 (total) and MW-4I (total) were qualified as estimated (J). All other GFAA quality control criteria requirements were met.

Inductively Coupled Plasma Serial Dilution

Sample MW-1 (total) and MW-1 (dissolved) was used for the inductively coupled plasma (ICP) serial dilution analysis. The aluminum and iron percent differences between the initial and serial dilution results for MW- 1 (total) were greater than the criteria. Therefore, aluminum and iron results for all the total samples were qualified as estimated (J and UJ). All other ICP serial dilution results were within the control limits.

Sample Result Verification

No discrepancies were found between the reported results and the QC data package.

Field Duplicate

DUP 1 is a field duplicate of MW-3.

The results of DUP 1, MW-3, and the corresonding relative percent difference (RPD) values are listed below:

Analyte	MW-3 (total) Concentration (ug/L)	DUP 1 (total) Concentration (ug/L)	RPD
Aluminum	41,500	51,400	21
Antimony	38.0 U	48.2 B	200
Arsenic	49.3	61.9	23
Barium330	389	16	
Calcium	65,800	630,000	4.3
Chromium	49.5	58.5	17
Cobalt38.6	42.9	11	
Copper85.5	96.8	12	
Iron	70,200	81,400	15
Lead	176	254	36
Magnesium	206,000	199,000	3.5
Manganese	3,460	3,390	2.0

Nickel75.5	82.7	9.1	
Potassium	7,980	8,900	11
Sellinum	1.1	1.0	9.5
Sodium	32,600	32,800	0.6
Thallium	1.1 B	1.0 U	200
Vanadium	74.2	75.2	1.3
Zinc	198	218	9.6

Analyte	MW-3 (dissolved) Concentration (ug/L)	DUP 1 (dissolved) Concentration (ug/L)	RPD
Aluminum	17.44 B	16.9 B	2.9
Arsenic	1.6 B	1.9 B	17
Barium29.6 B	31.0 B	1.3	
Calcium	172,000	178,000	3.4
Copper2.9 B	2.0 U	200	
Iron	1,120	1,160	3.5
Lead	2.2	3.0	31
Magnesium	44,300	45.700	3.1
Manganese	549	567	3.2
Sodium	29,300	30,400	3.7
Zinc	38.9	40.9	5.0

The field duplicate results are considered acceptable.

Overall Assessment of Data for the Case

A comparison of the total and dissolved results for the samples was performed. All sample results with a percent difference (%D) over 10% were qualified as estimated (J) and results with a %D greater than 50% were qualified as unusable (R). The results are listed below.

Sample ID	Analyte	Dissolved Concentration (ug/L)	Total Concentration (ug/L)	%D	Qualifier
MW-4I	Barium	576	470	23	J
MW-4I	Chromium	114	95.7	19	J
MW-4I	Copper	197	155	27	J
MW-4I	Iron	106,000	85,200	24	J
MW-4I	Lead	145	71.0	104	R
MW-4I	Manganese	4,380	3,920	12	J

MW-4I	Nickel	132	108	22	J
MW-4I	Vanadium	94.2	74.2	27	J
MW-4I	Zinc	377	294	28	J
MW-5	Zinc	80.2	51.2	57	R
FB010595	Iron	128	114	12	J

The quality of the inorganic data presented in this QC data package is acceptable with the appropriate qualificaitons described in the memorandum.

g:\chemical\data-val\albany\schina\1994\z0018ino.mem

Table 1. Sample Identification, Collection Dates, and Laboratory Received Dates for Samples Analyzed Under IEA Project Number 3095-Z0018.

Geraghty and Miller, Inc. ID	Laboratory ID	Date Collected	Date Received
MW-6	0018001	01/05/95	01/06/95
MW-1	0018002	01/05/95	01/06/95
MW-5	0018003	01/05/95	01/06/95
MW-2	0018004	01/05/95	01/06/95
MW-3	0018005	01/05/95	01/06/95
DUP 1	0018006	01/05/95	01/06/95
MW-7	0018007	01/05/95	01/06/95
MW-4	0018008	01/05/95	01/06/95
MW-4I	0018009	01/05/95	01/06/95
FB 010595	0018010	01/05/95	01/06/95
TB 010595	0018011	01/05/95	01/06/95

MEMORANDUM

TO: Bill Gray

FROM: Lisa Westbay and Lauren Sjogren

DATE: April 3, 1995

SUBJECT: Data Validation of Samples Collected at the Syracuse China Site (Project No. AY0146.004)

Samples were collected at the Syracuse China site in Syracuse, New York and were sent to IEA Laboratories, Inc. in Monroe, Connecticut for analysis. Ten surface water samples were collected on December 7, 1994 and were analyzed for volatile organic compounds (VOCs); 14 sediment samples were collected on December 1, 1994 and December 7, 1994 and were analyzed for VOCs; 18 soil boring samples were collected between November 28, 1994 and December 6, 1994 and were analyzed for VOCs; one soil sample was collected on December 6, 1994 and was analyzed for semivolatile organic compounds (SVOCs); two soil boring samples were collected on December 1, 1994 and were analyzed for polychlorinated biphenyls (PCBs); and 11 groundwater samples were collected on January 5, 1995 and were analyzed for VOCs, metals, and cyanide. The samples were analyzed by IEA Laboratory using the New York State Department of Environmental Conservation (NYSDEC) Contract Laboratory Program (CLP) Statement of Work (SOW), January 1991. Validation of the VOC and SVOC data was performed following the "USEPA Contract Laboratory Program, National Functional Guidelines for Organic Data Review", dated June 1991 (Draft), and the "United States Environmental Protection Agency (USEPA) Region II Standard Operating Procedure (SOP)", dated January 1992, for validation of the PCB data.

Three data packages (sample delivery groups [SDGs]) were provided by the laboratory, and the validation results of each are discussed separately below. The quality of the data was acceptable with the appropriate qualifications described in this memorandum.

ORGANIC DATA VALIDATION SUMMARY

SDG Z1368 RESULTS

Holding Times

Volatiles: All samples were analyzed within seven days from time of sample collection.

Semivolatiles: All samples were extracted within the holding time of seven days from sample collection to extraction and 40 days from sample extraction to analysis.

PCBs: All samples were extracted within holding time of seven days of the date of collection and extracted within 40 days of the date of extraction.

GC/MS Tunes

Volatiles: Each set of tuning data meets the required ion abundance criteria. All samples were analyzed within the 12-hour tune time limit.

Semivolatiles: Each set of tuning data meets the required ion abundance criteria specified. All samples were analyzed within the 12-hour tune time limit.

Pesticides Instrument Performance

PCBs: To evaluate the performance of the gas chromatograph (GC) instruments used to analyzed the samples, the following were reviewed:

- retention time windows
- initial calibration
- linearity criteria
- resolution between adjacent peaks

- 4,4'-DDT/Endrin degradation
- RPD values for all performance evaluation mixture (PEM) analytes

All of the criteria listed above were found to be acceptable, with one exception. The %RSD for 4,4'-DDT, analyzed using column DB-1701, was 30%; and therefore, exceeded the linearity criteria. However, because pesticides were not analyzed for in these samples, qualification of the data was not necessary.

Calibration

Initial Calibration

Volatiles: Three initial calibrations were conducted. The initial calibration conducted on instrument HP5995G on November 14, 1994, had all relative response factors (RRF) ≥ 0.05, and all percent relative standard deviations (%RSD) $\leq 30\%$. The initial calibration conducted on instrument HP5995B on November 5, 1994, had all relative response factors (RRF) ≥ 0.05, and all percent relative standard deviations (%RSD) $\leq 30\%$, except for acetone which was 32.4%. The initial calibration conducted on instrument HP5972D on November 9, 1994, had all RRFs ≥ 0.05, and all %RSDs $\leq 30\%$, except for acetone which was 62.5%. The following sample results were qualified as estimated (J) due to the associated initial calibration results:

Sample ID	Compound	Concentration (ug/kg)
MW-6	Acetone	39 J
MW-4I	Acetone	38 J
PSS-11	Acetone	36 J
PBM-1	Acetone	33 J
MW-7	Acetone	150 J
PSB-5	Acetone	22 J
PSB-4	Acetone	20 J

Acetone was detected in samples PSB-1, PSB-2, and PSB-3 but were not qualified as estimated (J) because they will be further qualified as non-detected (U) based on the blank results discussed ~~in Section IV~~ on page 15.

Semivolatiles: The initial calibration was conducted December 1, 1994 with all RRFs ≥0.05 and all %RSDs ≤30%, with one exception. The %RSD for hexachlorocyclopentadiene was 50.5. Hexachlorocyclopentadiene was not detected in the associated sample, and therefore, no action was taken.

PCBs: All initial calibration requirements were met.

Continuing Calibration

Volatiles: Seven continuing calibration runs were conducted with all RRFs ≥0.05 and %D ≤25%, with the exceptions noted below.

Instrument: HP5995G Calibration Date: 12/3/94 Time: 10:28

Compound	%D
Chloromethane	-34.5
Vinyl chloride	-28.5
Acetone	34.0
2-Butanone	43.0
4-Methyl-2-pentanone	33.4
2-Hexanone	41.6

Instrument: HP5995B Calibration Date: 12/5/94 Time: 10:05

Compound	%D
Acetone	47.3
2-Butanone	39.3
4-Methyl-2-pentanone	34.8
2-Hexanone	36.4

Instrument: HP5995B Calibration Date: 12/6/94 Time: 9:46

Compound	%D
2-Butanone	40.2
Carbon tetrachloride	-31.7
4-Methyl-2-pentanone	32.8
2-Hexanone	36.5

Instrument: HP5995B Calibration Date: 12/9/94 Time: 8:54

Compound	%D
Chloromethane	-37.3
Acetone	28.4
2-Butanone	39.6
4-Methyl-2-pentanone	32.6
2-Hexanone	30.3
1,1,2,2-Tetrachloroethane	28.8

Instrument: HP5972D Calibration Date: 12/6/94 Time: 8:58

Compound	%D
Acetone	26.0

Instrument: HP5972D Calibration Date: 12/7/94 Time: 9:08

Compound	%D
Chloromethane	26.6
Acetone	52.6
4-Methyl-2-pentanone	55.3

Instrument: HP5972D Calibration Date: 12/9/94 Time: 8:04

Compound	%D
Acetone	25.5

Based on continuing calibration results, the following compounds were qualified as estimated (J) if detected and estimated (UJ) if nondetected:

Sample ID	Compound	Concentration
FB112894	Chloromethane	10 UJ
	Vinyl chloride	10 UJ
	Acetone	10 UJ
	2-Butanone	10 UJ
	4-Methyl-2-pentanone	10 UJ
	2-Hexanone	10 UJ

Sample ID	Compound	Concentration
FB113094	Chloromethane	10 UJ
	Vinyl chloride	10 UJ
	Acetone	10 UJ
	2-Butanone	10 UJ
	4-Methyl-2-pentanone	10 UJ
	2-Hexanone	10 UJ
MW-6	2-Butanone	11 UJ
	4-Methyl-2-pentanone	11 UJ
	2-Hexanone	11 UJ
MW-3I	Acetone	11 UJ
	2-Butanone	11 UJ
	4-Methyl-2-pentanone	11 UJ
	2-Hexanone	11 UJ
MW-4I	2-Butanone	11 UJ
	4-Methyl-2-pentanone	11 UJ
	2-Hexanone	11 UJ
PSS-11	2-Butanone	14 UJ
	4-Methyl-2-pentanone	14 UJ
	2-Hexanone	14 UJ
PBM-1	2-Butanone	16 UJ
	4-Methyl-2-pentanone	16 UJ
	2-Hexanone	16 UJ
PBM-2	Acetone	13 UJ
	2-Butanone	13 UJ
	4-Methyl-2-pentanone	13 UJ
	2-Hexanone	13 UJ
MW-7	4-Methyl-2-pentanone	12 UJ
	2-Hexanone	12 UJ
PSB-5	2-Butanone	13 UJ
	4-Methyl-2-pentanone	13 UJ
	2-Hexanone	13 UJ
PSB-4	2-Butanone	12 UJ
	4-Methyl-2-pentanone	12 UJ
	2-Hexanone	12 UJ

Sample ID	Compound	Concentration
PSB-1	Chloromethane	12 UJ
	Acetone	36 UJ
	4-Methyl-2-pentanone	12 UJ
	2-Hexanone	12 UJ
	1,1,2,2-Tetrachloroethane	12 UJ
PSB-2	Chloromethane	11 UJ
	Acetone	24 UJ
	2-Butanone	11 UJ
	4-Methyl-2-pentanone	11 UJ
	2-Hexanone	11 UJ
	1,1,2,2-Tetrachloroethane	11 UJ
PSB-3	Chloromethane	14 UJ
	Acetone	31 UJ
	2-Butanone	14 UJ
	4-Methyl-2-pentanone	14 UJ
	2-Hexanone	14 UJ
	1,1,2,2-Tetrachloroethane	14 UJ
TB113094	Acetone	10 UJ
FB120194	Acetone	10 UJ
TB120194	Acetone	10 UJ
FB120294	Acetone	10 UJ
TB120294	Chloromethane	10 UJ
	Acetone	10 UJ
	4-Methyl-2-pentanone	10 UJ
TB120694	Acetone	10 UJ

Due to the previous qualification of acetone results based on initial calibration results (samples MW-6, MW-4I, PSS-11, PBM-1, MW-7, PSB-5, PSB-4) and the previous qualification of 2-butanone results in samples MW-7 and PSB-1 as estimated (J), no further qualification to these data were made.

Semivolatiles: One continuing calibration run was conducted on December 15, 1994, with all RRFs ≥ 0.05 and all %RSDs $\leq 25\%$ with the following exceptions:

Compound	%D
Hexachlorocyclopentadiene	30.1
3-Nitroaniline	26.7
4-Nitroaniline	32.2
Carbazole	43.4

None of the above compounds were detected in the associated sample; therefore, these compound results were qualified as estimated (UJ) for sample PSB-3.

Blanks

Volatiles: Seven method blanks were analyzed; no compounds were detected in them except for the following:

Method Blank: VBLKGG Date Analyzed: 12/3/94

Compound	Concentration in Micrograms per Liter (ug/L)
Methylene chloride	0.8 J
Acetone	4 J
Chloroform	1 J

Method Blank: VBLKDX Date Analyzed: 12/6/94

Compound	Concentration (ug/L)
Acetone	20

Method Blank: VBLKB4 Date Analyzed: 12/6/94

Compound	Concentration in Micrograms per Kilogram (ug/kg)
Acetone	5 J

Method Blank: VBLKB7 Date Analyzed: 12/9/94

Compound	Concentration (ug/kg)
Acetone	25

The following sample results were qualified as non-detected (U) due to the associated method blank results:

Sample ID	Compound	Concentration (ug/kg)
PSB-1	Acetone	36 U
PSB-2	Acetone	24 U
PSB-3	Acetone	31 U

Four field blanks and four trip blanks were analyzed; no compounds were detected in these blanks. However, FB120694, which was reported in SDG A1368, was associated with three samples contained in this SDG. Toluene was detected in FB120694 at an estimated concentration of 2 ug/L, and therefore, the following sample results were qualified as non-detected (U) as a result:

Sample ID	Compound	Concentration (ug/kg)
PSB-1	Toluene	12 U
PSB-2	Toluene	11 U
PSB-3	Toluene	14 U

Semivolatiles: One method blank was analyzed with the following target compounds detected:

Compound	Concentration (ug/kg)
Di-n-butylphthalate	21 J
bis(2-Ethylhexyl)phthalate	11 J

The following sample results were qualified as non detected due to the method blank results:

Sample ID	Compound	Concentration (ug/kg)
PSB-3	Di-n-butylphthalate	470 U
PSB-3	bis(2-Ethylhexyl)phthalate	470 U

No field blanks were associated with this sample.

The following tentatively identified compounds (TICs) were detected in the method blank:

Method Blank	Compound	Retention Time (Minutes)	Concentration (ug/kg)
SBLKFI	4-Methyl-3-penten-2-one	5.38	540 JN
SBLKFI	Unknown	5.97	400 J
SBLKFI	Unknown	6.38	1,400 J
SBLKFI	Aldol condensation prod.	7.07	57,000 JA
SBLKFI	Unknown	8.44	590 J
SBLKFI	Unknown alkane	9.27	110 J
SBLKFI	Unknown alkane	10.55	400 J
SBLKFI	Unknown alkane	10.69	180 J
SBLKFI	Unknown alkane	10.78	470 J
SBLKFI	Unknown alkane	11.16	500 J
SBLKFI	Unknown alkane	11.20	150 J
SBLKFI	Unknown alkane	11.31	360 J
SBLKFI	Unknown	11.41	99 J
SBLKFI	Unknown alkane	11.55	370 J
SBLKFI	Unknown alkane	11.76	77 J
SBLKFI	Unknown alkane	11.95	100 J
SBLKFI	Unknown alkane	17.97	100 J
SBLKFI	Unknown alkane	20.65	91 J
SBLKFI	Unknown alkane	23.04	72 J
SBLKFI	Unknown	24.70	98 J
SBLKFI	Unknown alkane	27.59	120 J

The following TICs were found in sample PSB-3 and not reported (R) because they were also detected in the associated method blank:

Sample ID	Compound	Retention Time (Minutes)
PSB-3	4-Methyl-3-penten-2-one	5.40
PSB-3	Unknown	5.98
PSB-3	Unknown	6.33
PSB-3	Aldol condensation prod.	7.04
PSB-3	Unknown	8.43
PSB-3	Unknown alkane	9.28
PSB-3	Unknown alkane	10.55
PSB-3	Unknown alkane	10.69
PSB-3	Unknown alkane	10.78
PSB-3	Unknown alkane	11.16
PSB-3	Unknown alkane	11.21
PSB-3	Unknown alkane	11.32
PSB-3	Unknown alkane	11.56

PSB-3	Unknown alkane	11.95
PSB-3	Unknown alkane	17.97
PSB-3	Unknown alkane	20.65
PSB-3	Unknown	24.71

PCBs: No compounds were detected in the blanks.

Surrogate Recovery

Volatiles: All surrogate spike recoveries were within the set criteria.

Semivolatiles: All surrogate spike recoveries were within the set criteria.

PCBs: Surrogate spike recoveries were within the set criteria, with the exception of TCX (56%) in sample PBM-1MSB; action was not required.

Matrix Spike/Matrix Spike Duplicate

Volatiles: Two soil MS/MSDs and two MSBs were analyzed. Samples MW-6 and PSB-5 were designated for spiking and analysis as the MS/MSDs. No spike recoveries or RPD values were outside QC limits with one exception. The 1,1-dichloroethene RPD value for the PSB-5 MS/MSD was 23%. Since the criteria for this compound is 22% and the compound was not detected in any samples, it is this data reviewer's professional opinion that qualification of the data is not necessary.

Semivolatiles: A soil MS/MSD and MSB were analyzed. Sample PSB-3 was designated for spiking and analysis as the MS/MSD. One spike recovery (pentachlorophenol) was above the QC limits for the MS/MSD sample, and two spike recoveries (pentachlorophenol and 4-nitrophenol) were above the QC limits for the MSB sample. However, since these compounds were not detected in the associated sample, it is this data reviewer's opinion that qualification of the data is not necessary.

PCBs: A soil MS/MSD and MSB were analyzed. Sample PBM-1 was spiked with aroclor-1260 and analyzed as the MS/MSD. No spike recoveries or RPD values were outside QC limits for the MS/MSD and MSB samples.

Field Duplicates

Volatiles: Soil field duplicates were not required.

Semivolatiles: Soil field duplicates were not required.

PCBs: Soil field duplicates were not required.

Internal Standards Performance

Volatiles: All IS area counts and retention times met QC requirements with one exception. The retention time for chlorobenzene-d5 in sample FB120294 was 16.61. This retention time exceeded the ±0.50 minute QC criteria of the ISTD retention time of 17.53. Since no compounds were detected in sample FB120294 that were associated with this standard, it is this data reviewers opinion that the data were not compromised and no qualification of the data was necessary.

Semivolatiles: All IS area counts and retention times met QC requirements.

Target Compound Identification

Volatiles: All relative retention times met QC requirements, and all compounds were reported correctly.

Semivolatiles: All relative retention times met QC requirements, and all compounds were reported correctly.

PCBs: All retention times met QC requirements and all compounds were reported correctly.

Compound Quantitation and Reported Detection Limit

Volatiles: All compound detection limits were met or adjusted for dilution factors.

Semivolatiles: All compound detection limits were met or adjust for dilution factors.

PCBs: All compound detection limits were met or adjusted for dilution factors.

Tentatively Identified Compounds

Volatiles: All TICs were reported correctly.

Semivolatiles: All TICs were reported correctly.

System Performance

Volatiles: The performance of the instruments during the volatile organic analyses is considered acceptable.

Semivolatiles: The performance of the instruments during the volatile organic analyses is considered acceptable.

Overall Assessment of Data

The quality of the data represented by this QC package is acceptable with the appropriate qualifiers specified in this memorandum.

SDG A1368 RESULTS

Holding Times

Volatiles: All samples were analyzed within seven days from time of sample collection.

GC/MS Tunes

Volatiles: Each set of tuning data meets the required ion abundance criteria. All samples were analyzed within the 12-hour tune time limit.

Calibration

Initial Calibration

Volatiles: Two initial calibrations were conducted. The initial calibration conducted using instrument HP5995B on November 5, 1994, had all relative response factors (RRF) ≥ 0.05, and all percent relative standard deviations (%RSD) $\leq 30\%$, except for acetone which was 34.1%. The initial calibration conducted using instrument HP5972D on November 9, 1994, had all RRFs ≥ 0.05, and all %RSDs $\leq 30\%$, except for acetone which was 62.5%. Acetone was not detected in any of the surface water samples; acetone was detected in sediment samples PSS-5, PSS-6, PSS-7, PSS-8, and PSS-9 but the results were not qualified as estimated (J) because they were further qualified as not detected (U) based on the blank results as discussed in Section IV.

Continuing Calibration

Volatiles: Four continuing calibration runs were conducted at the required frequency with all RRFs ≥ 0.05 and percent differences (%D) $\leq 25\%$, with the following exceptions:

Instrument ID	Date	Compound	%D
HP5995B	12/9/94	Chloromethane	-37.3
HP5995B	12/9/94	Acetone	29.5
HP5995B	12/9/94	2-Butanone	39.6
HP5995B	12/9/94	4-Methyl-2-pentanone	32.6
HP5995B	12/9/94	2-Hexanone	30.3
HP5995B	12/9/94	1,1,2,2-Tetrachloroethane	28.8

Results for the samples associated with the continuing calibration performed on December 9, 1994 were qualified as estimated (J) if detected and estimated (UJ) if non-detected.

Blanks

Volatiles: Four method blanks were analyzed; no compounds were detected in these blanks except for the following:

Method Blank: VBLK7 Date Analyzed: 12/9/94

Compound	Concentration in Micrograms per Kilogram (ug/kg)
Acetone	25

The following sample results were qualified as not-detected (U) due to the associated method blank results:

Sample ID	Compound	Concentration (ug/kg)
PSS-5	Acetone	30 U
PSS-7	Acetone	17 U
PSS-6	Acetone	28 U
PSS-8	Acetone	110 U
PSS-9	Acetone	41 U

No tentatively identified compounds (TICs) were detected in any of the method blanks.

Two field blanks and one trip blank were analyzed; no compounds were detected in FB120794. The following compounds were detected in the remaining blanks:

Sample ID	Compound	Concentration (ug/L)
TB120794	Chloroform	1 J
FB120694	Toluene	2 J

The samples associated with FB120694 were reported in the first data package (SDG Z1368), and are therefore not discussed in this section. No qualification of chloroform sample results associated with TB120794 were required because the chloroform concentrations in the samples exceeded the blank concentration multiplied by five. No TICs were detected in the field blanks.

Surrogate Recovery

Volatiles: All surrogate spike recoveries were within the set criteria.

Matrix Spike/Matrix Spike Duplicate

Volatiles: A surface water MS/MSD and one MSB were analyzed. Sample PSW-9 was spiked and analyzed as the MS/MSD. No spike recoveries or relative percent difference (RPD) values were outside QC limits for the PSW-9 MS/MSD and the MSB. A soil MS/MSD was analyzed and reported in SDG Z1368. Qualification of the data was not necessary based on the MS/MSD and MSB results.

Field Duplicates

A field duplicate of surface water sample PSW-9 was collected and labelled DUP. Both PSW-9 and DUP were analyzed with chloroform and bromodichloromethane detected in both at the same estimated concentrations of 9 ug/L and 2 ug/L, respectively. It is this data reviewer's opinion that these field duplicate results are acceptable.

Internal Standards

Volatiles: All internal standard (IS) area counts and retention times met QC requirements.

Target Compound Identification

Volatiles: All relative retention times met QC requirements and all compounds were reported correctly.

Compound Quantitation and Reported Detection Limits

Volatiles: All compound detection limits were met or were adjusted for dilution factors.

Tentatively Identified Compounds

Volatiles: All TICs were reported correctly.

System Performance

The performance of the instruments during the volatile organic analyses is considered acceptable.

Overall Assessment of Data

The quality of the data represented by this QC package is acceptable with the appropriate qualifiers specified in this memorandum.

SDG Z0018 RESULTS

Holding Times

Volatiles: All samples were analyzed within seven days from time of sample collection.

GC/MS Tunes

Volatiles: Each set of tuning data meets the required ion abundance criteria. All samples were analyzed within the 12-hour tune time limit.

Calibration

Initial Calibration

Volatiles: One initial calibration was conducted on November 9, 1994 on instrument HP5972D. This initial calibration had all relative response factors (RRF) ≥ 0.05 and all percent relative standard deviations (%RSD) $\leq 30\%$, except for acetone which was 62.5%. Acetone was not detected in any of the groundwater samples, and therefore, no action was taken.

Continuing Calibration

Volatiles: One continuing calibration run was conducted (January 9, 1995) at the required frequency, and all RRFs were ≥ 0.05 and percent differences (%D) were $\leq 25\%$, with one exception. The %D for chloroethane was 33.0%. Chloroethane was not detected in any sample associated with this continuing calibration, and therefore, the non-detect chloroethane sample results were qualified as estimated (UJ).

Blanks

Volatiles: One method blank was analyzed; no compounds were detected in this blank.

One field blank and one trip blank were analyzed; no compounds were detected in these blanks with the exception of chloroform which was detected in FB010595 at an estimated concentration of 1 ug/L. Chloroform was not detected in any of the samples associated with this blank, therefore no qualification of the data was necessary.

Surrogate Recovery

Volatiles: All surrogate spike recoveries were within the set criteria.

Matrix Spike/Matrix Spike Duplicate

Volatiles: A MS/MSD and MSB were analyzed. Sample MW-1 was spiked and analyzed as the MS/MSD. No spike recoveries or RPD values were outside QC limits for the MW-1 MS/MSD and the MSB.

Field Duplicates

A field duplicate of groundwater sample MW-3 was analyzed. Xylene (total) was detected in MW-3 at an estimated concentration of 0.7 ug/L, but was not detected in the duplicate (10U). The data are considered acceptable with no qualification necessary.

Internal Standards

Volatiles: All internal standard (IS) area counts and retention times met QC requirements.

Target Compound Identification

Volatiles: All relative retention times met QC requirements and all compounds were reported correctly.

Compound Quantitation and Reported Detection Limits

Volatiles: All compound detection limits were met or were adjusted for dilution factors.

Tentatively Identified Compounds

Volatiles: All TICs were reported correctly.

System Performance

The performance of the instruments during the volatile organic analyses is considered acceptable.

Overall Assessment of Data

The quality of the data represented by this QC package is acceptable with the appropriate qualifiers specified in this memorandum.

APPENDIX G

LABORATORY REPORTS

TABLE VOA-1.6
3094-1368
GERAGHTY & MILLER
EPA TCL VOLATILES

All values are ug/Kg dry weight basis.

Client Sample I.D.	MW-6 MSD	MW-3I	MW-4I	Quant. Limits with no Dilution
Lab Sample I.D.	1368002MSD	1368003	1368004	
Method Blank I.D.	VBLKB3	VBLKB3	VBLKB3	
Dilution Factor	1.12	1.09	1.08	
Chloromethane	U	U	U	10
Bromomethane	U	U	U	10
Vinyl Chloride	U	U	U	10
Chloroethane	U	U	U	10
Methylene Chloride	U	U	U	10
Acetone	61	U	38	10
Carbon Disulfide	U	U	U	10
1,1-Dichloroethene	53X	U	U	10
1,1-Dichloroethane	U	U	U	10
1,2-Dichloroethene (total)	U	U	U	10
Chloroform	U	U	U	10
1,2-Dichloroethane	U	U	U	10
2-Butanone	U	U	U	10
1,1,1-Trichloroethane	U	U	U	10
Carbon Tetrachloride	U	U	U	10
Bromodichloromethane	U	U	U	10
1,2-Dichloropropane	U	U	U	10
cis-1,3-Dichloropropene	U	U	U	10
Trichloroethene	64X	2J	U	10
Dibromochloromethane	U	U	U	10
1,1,2-Trichloroethane	U	U	U	10
Benzene	59X	U	U	10
trans-1,3-Dichloropropene	U	U	U	10
Bromoform	U	U	U	10
4-Methyl-2-Pentanone	U	U	U	10
2-Hexanone	U	U	U	10
Tetrachloroethene	U	U	U	10
1,1,2,2-Tetrachloroethane	U	U	U	10
Toluene	62X	21	3J	10
Chlorobenzene	62X	U	U	10
Ethylbenzene	U	U	U	10
Styrene	U	U	U	10
Xylene (total)	U	U	U	10
Date Received	11/30/94	12/01/94	12/01/94	
Date Extracted	N/A	N/A	N/A	
Date Analyzed	12/05/94	12/05/94	12/05/94	

See Appendix for qualifier definitions
Note: Compound detection limit = quantitation limit x dilution factor

TABLE VOA-1.8
3094-1368
GERAGHTY & MILLER
EPA TCL VOLATILES

All values are ug/Kg dry weight basis.

Client Sample I.D.	MW-7	PSB-5	PSB-5 MS	Quant. Limits with no Dilution
Lab Sample I.D.	1368010	1368013	1368013MS	
Method Blank I.D.	VBLKB3	VBLKB3	VBLKB3	
Dilution Factor	1.20	1.28	1.28	
Chloromethane	U	U	U	10
Bromomethane	U	U	U	10
Vinyl Chloride	U	U	U	10
Chloroethane	U	U	U	10
Methylene Chloride	U	U	U	10
Acetone	150	22	40	10
Carbon Disulfide	U	U	U	10
1,1-Dichloroethene	U	U	44X	10
1,1-Dichloroethane	U	U	U	10
1,2-Dichloroethene (total)	U	U	U	10
Chloroform	U	U	U	10
1,2-Dichloroethane	U	U	U	10
2-Butanone	5J	U	U	10
1,1,1-Trichloroethane	U	U	U	10
Carbon Tetrachloride	U	U	U	10
Bromodichloromethane	U	U	U	10
1,2-Dichloropropane	U	U	U	10
cis-1,3-Dichloropropene	U	U	U	10
Trichloroethene	U	U	67X	10
Dibromochloromethane	U	U	U	10
1,1,2-Trichloroethane	U	U	U	10
Benzene	U	U	64X	10
trans-1,3-Dichloropropene	U	U	U	10
Bromoform	U	U	U	10
4-Methyl-2-Pentanone	U	U	U	10
2-Hexanone	U	U	U	10
Tetrachloroethene	U	U	U	10
1,1,2,2-Tetrachloroethane	U	U	U	10
Toluene	4J	2J	68X	10
Chlorobenzene	U	U	69X	10
Ethylbenzene	U	U	U	10
Styrene	U	U	U	10
Xylene (total)	U	U	U	10
Date Received	12/02/94	12/05/94	12/05/94	
Date Extracted	N/A	N/A	N/A	
Date Analyzed	12/05/94	12/05/94	12/05/94	

See Appendix for qualifier definitions
Note: Compound detection limit = quantitation limit x dilution factor

TABLE VOA-1.9
3094-1368
GERAGHTY & MILLER
EPA TCL VOLATILES

Soil

All values are ug/Kg dry weight basis.

Client Sample I.D.	PSB-4			Quant. Limits with no Dilution
Lab Sample I.D.	1368014			
Method Blank I.D.	VBLKB3			
Dilution Factor	1.23			
Chloromethane	U			10
Bromomethane	U			10
Vinyl Chloride	U			10
Chloroethane	U			10
Methylene Chloride	U			10
Acetone	20			10
Carbon Disulfide	U			10
1,1-Dichloroethene	U			10
1,1-Dichloroethane	U			10
1,2-Dichloroethene (total)	U			10
Chloroform	U			10
1,2-Dichloroethane	U			10
2-Butanone	U			10
1,1,1-Trichloroethane	U			10
Carbon Tetrachloride	U			10
Bromodichloromethane	U			10
1,2-Dichloropropane	U			10
cis-1,3-Dichloropropene	U			10
Trichloroethene	U			10
Dibromochloromethane	U			10
1,1,2-Trichloroethane	U			10
Benzene	U			10
trans-1,3-Dichloropropene	U			10
Bromoform	U			10
4-Methyl-2-Pentanone	U			10
2-Hexanone	U			10
Tetrachloroethene	U			10
1,1,2,2-Tetrachloroethane	U			10
Toluene	3J			10
Chlorobenzene	U			10
Ethylbenzene	U			10
Styrene	U			10
Xylene (total)	U			10
Date Received	12/05/94			
Date Extracted	N/A			
Date Analyzed	12/05/94			

See Appendix for qualifier definitions
Note: Compound detection limit = quantitation limit x dilution factor

TABLE VOA-1.10
3094-1368
GERAGHTY & MILLER
EPA TCL VOLATILES

All values are ug/Kg dry weight basis.

Client Sample I.D.	Method Blank	PSB-5 MSD		Quant. Limits with no Dilution
Lab Sample I.D.	VBLKB4	1368013MSD		
Method Blank I.D.	VBLKB4	VBLKB4		
Dilution Factor	1.00	1.28		
Chloromethane	U	U		10
Bromomethane	U	U		10
Vinyl Chloride	U	U		10
Chloroethane	U	U		10
Methylene Chloride	U	6J		10
Acetone	5J	37B		10
Carbon Disulfide	U	U		10
1,1-Dichloroethene	U	55X		10
1,1-Dichloroethane	U	U		10
1,2-Dichloroethene (total)	U	U		10
Chloroform	U	U		10
1,2-Dichloroethane	U	U		10
2-Butanone	U	6J		10
1,1,1-Trichloroethane	U	U		10
Carbon Tetrachloride	U	U		10
Bromodichloromethane	U	U		10
1,2-Dichloropropane	U	U		10
cis-1,3-Dichloropropene	U	U		10
Trichloroethene	U	62X		10
Dibromochloromethane	U	U		10
1,1,2-Trichloroethane	U	U		10
Benzene	U	60X		10
trans-1,3-Dichloropropene	U	U		10
Bromoform	U	U		10
4-Methyl-2-Pentanone	U	U		10
2-Hexanone	U	U		10
Tetrachloroethene	U	U		10
1,1,2,2-Tetrachloroethane	U	U		10
Toluene	U	70X		10
Chlorobenzene	U	65X		10
Ethylbenzene	U	U		10
Styrene	U	U		10
Xylene (total)	U	U		10
Date Received		12/05/94		
Date Extracted	N/A	N/A		
Date Analyzed	12/06/94	12/06/94		

See Appendix for qualifier definitions
Note: Compound detection limit = quantitation limit x dilution factor

TABLE VOA-1.12
3094-1368
GERAGHTY & MILLER
EPA TCL VOLATILES

Soil

All values are ug/Kg dry weight basis.

Client Sample I.D.	PSB-3			Quant. Limits with no Dilution
Lab Sample I.D.	1368019			
Method Blank I.D.	VBLKB7			
Dilution Factor	1.43			
Chloromethane	U			10
Bromomethane	U			10
Vinyl Chloride	U			10
Chloroethane	U			10
Methylene Chloride	2J			10
Acetone	31B			10
Carbon Disulfide	U			10
1,1-Dichloroethene	U			10
1,1-Dichloroethane	U			10
1,2-Dichloroethene (total)	U			10
Chloroform	U			10
1,2-Dichloroethane	U			10
2-Butanone	U			10
1,1,1-Trichloroethane	U			10
Carbon Tetrachloride	U			10
Bromodichloromethane	U			10
1,2-Dichloropropane	U			10
cis-1,3-Dichloropropene	U			10
Trichloroethene	U			10
Dibromochloromethane	U			10
1,1,2-Trichloroethane	U			10
Benzene	U			10
trans-1,3-Dichloropropene	U			10
Bromoform	U			10
4-Methyl-2-Pentanone	U			10
2-Hexanone	U			10
Tetrachloroethene	U			10
1,1,2,2-Tetrachloroethane	U			10
Toluene	6J			10
Chlorobenzene	U			10
Ethylbenzene	U			10
Styrene	U			10
Xylene (total)	U			10
Date Received	12/07/94			
Date Extracted	N/A			
Date Analyzed	12/09/94			

See Appendix for qualifier definitions
Note: Compound detection limit = quantitation limit x dilution factor

TABLE SV-1.0
3094-1368
GERAGHTY & MILLER
EPA TCL SEMI-VOLATILE ORGANICS

All values are ug/Kg dry weight basis.

	Sample Identification				
Dilution Factor	1.0	1.42	1.42	1.42	
Method Blank I.D.	SBLKFI	SBLKFI	SBLKFI	SBLKFI	
Compound	Method Blank	PSB-3	PSB-3 MS	PSB-3 MSD	Quantitation Limits with no Dilution
Phenol	U	U	2,000X	2,100X	330
bis(2-Chloroethyl)ether	U	U	U	U	330
2-Chlorophenol	U	U	2,100X	2,200X	330
1,3-Dichlorobenzene	U	U	U	U	330
1,4-Dichlorobenzene	U	U	1,200X	1,300X	330
1,2-Dichlorobenzene	U	U	U	U	330
2-Methylphenol	U	U	U	U	330
2,2'-oxybis(1-Chloropropane)	U	U	U	U	330
4-Methylphenol	U	U	U	U	330
N-Nitroso-di-n-propylamine	U	U	1,500X	1,600X	330
Hexachloroethane	U	U	U	U	330
Nitrobenzene	U	U	U	U	330
Isophorone	U	U	U	U	330
2-Nitrophenol	U	U	U	U	330
2,4-Dimethylphenol	U	U	U	U	330
bis(2-Chloroethoxy)methane	U	U	U	U	330
2,4-Dichlorophenol	U	U	U	U	330
1,2,4-Trichlorobenzene	U	U	1,400X	1,500X	330
Naphthalene	U	U	U	U	330
4-Chloroaniline	U	U	U	U	330
Hexachlorobutadiene	U	U	U	U	330
4-Chloro-3-methylphenol	U	U	2,200X	2,500X	330
2-Methylnaphthalene	U	U	U	U	330
Hexachlorocyclopentadiene	U	U	U	U	330
2,4,6-Trichlorophenol	U	U	U	U	330
2,4,5-Trichlorophenol	U	U	U	U	800
2-Chloronaphthalene	U	U	U	U	330
2-Nitroaniline	U	U	U	U	800
Dimethylphthalate	U	U	U	U	330
Acenaphthylene	U	U	U	U	330
2,6-Dinitrotoluene	U	U	U	U	330
3-Nitroaniline	U	U	U	U	800
Acenaphthene	U	U	1,400X	1,600X	330

See Appendix for qualifier definitions.
Note: Sample detection limit = quantitation limit x dilution factor.

TABLE SV-1.0
3094-1368
GERAGHTY & MILLER
EPA TCL SEMI-VOLATILE ORGANICS

All values are ug/Kg dry weight basis.

	Sample Identification				
Dilution Factor	1.0	1.42	1.42	1.42	
Method Blank I.D.	SBLKFI	SBLKFI	SBLKFI	SBLKFI	
Compound	Method Blank	PSB-3	PSB-3 MS	PSB-3 MSD	Quantitation Limits with no Dilution
2,4-Dinitrophenol	U	U	U	U	800
4-Nitrophenol	U	U	3,500X	3,700X	800
Dibenzofuran	U	U	U	U	330
2,4-Dinitrotoluene	U	U	1,700X	1,800X	330
Diethylphthalate	U	U	U	U	330
4-Chlorophenyl-phenylether	U	U	U	U	330
Fluorene	U	U	U	U	330
4-Nitroaniline	U	U	U	U	800
4,6-Dinitro-2-methylphenol	U	U	U	U	800
N-Nitrosodiphenylamine (1)	U	U	U	U	330
4-Bromophenyl-phenylether	U	U	U	U	330
Hexachlorobenzene	U	U	U	U	330
Pentachlorophenol	U	U	4,200X	4,700X	800
Phenanthrene	U	U	120J	10J	330
Anthracene	U	U	23J	U	330
Carbazole	U	U	U	U	330
Di-n-butylphthalate	21J	32JB	38JB	39JB	330
Fluoranthene	U	11J	210J	18J	330
Pyrene	U	11J	1,900X	1,900X	330
Butylbenzylphthalate	U	U	U	U	330
3,3'-Dichlorobenzidine	U	U	U	U	330
Benzo(a)anthracene	U	U	70J	9J	330
Chrysene	U	U	84J	10J	330
bis(2-Ethylhexyl)phthalate	11J	120JB	130JB	270JB	330
Di-n-octylphthalate	U	U	U	U	330
Benzo(b)fluoranthene	U	U	60J	U	330
Benzo(k)fluoranthene	U	U	66J	U	330
Benzo(a)pyrene	U	U	71J	10J	330
Indeno(1,2,3-cd)pyrene	U	U	34J	U	330
Dibenzo(a,h)anthracene	U	U	U	U	330
Benzo(g,h,i)perylene	U	U	32J	U	330

See Appendix for qualifier definitions.
Note: Sample detection limit = quantitation limit x dilution factor.

TABLE SV-2.0
3094-1368
GERAGHTY & MILLER
SEMI-VOLATILE TENTATIVELY IDENTIFIED COMPOUNDS

Sample Identification: Method Blank SBLKFI

CAS#	Compound	RT	Estimated Concentration, ug/Kg
141797	Unknown 3-penten-2-one,4-methyl-	5.38	540JN
	Unknown	5.97	400J
	Unknown	6.38	1,400J
	Aldol condensation product	7.07	57,000JA
	Unknown	8.44	590J
	Unknown alkane	9.27	110J
	Unknown alkane	10.55	400J
	Unknown alkane	10.69	180J
	Unknown alkane	10.78	470J
	Unknown alkane	11.16	500J
	Unknown alkane	11.20	150J
	Unknown alkane	11.31	360J
	Unknown	11.41	99J
	Unknown alkane	11.55	370J
	Unknown alkane	11.76	77J
	Unknown alkane	11.95	100J
	Unknown alkane	17.97	100J
	Unknown alkane	20.65	91J
	Unknown alkane	23.04	72J
	Unknown	24.70	98J
	Unknown alkane	27.59	120J

Sample Identification: PSB-3

CAS#	Compound	RT	Estimated Concentration, ug/Kg
141797	3-Penten-2-one,4-methyl-	5.40	640JNB
	Unknown	5.98	870JB
	Unknown	6.33	1,400JB
	Aldol condensation product	7.04	74,000JAB
	Unknown	8.43	740JB
	Unknown alkane	9.28	280JB
	Unknown alkane	10.55	960JB
	Unknown alkane	10.69	420JB
	Unknown alkane	10.78	1,100JB
	Unknown alkane	11.16	1,200JB
	Unknown alkane	11.21	370JB

See Appendix for qualifier definitions.

TABLE SV-2.1
3094-1368
GERAGHTY & MILLER
SEMI-VOLATILE TENTATIVELY IDENTIFIED COMPOUNDS

Sample Identification: PSB-3 (continued)

CAS#	Compound	RT	Estimated Concentration, ug/Kg
	Unknown alkane	11.32	880JB
	Unknown alkane	11.56	860JB
	Unknown alkane	11.95	230JB
	Unknown alkane	17.97	260JB
	Unknown alkane	20.65	230JB
57103	Hexadecanoic acid	23.47	570JN
	Unknown	24.71	230JB
	Unknown	25.27	700J
57114	Octadecanoic acid	25.47	480JN
103231	Hexanedioic acid,bis(2-eth	27.64	6,000JN

See Appendix for qualifier definitions.

Soil

TABLE GC-1.0
3094-1368
GERAGHTY & MILLER
POLYCHLORINATED BIPHENYLS (PCB's)

All values are ug/Kg dry weight basis.

Client Sample I.D.	Method Blank	PBM-1 MS	PBM-1 MSD	Quant. Limits with no Dilution
Lab Sample I.D.	120694-B05	1368008MS	1368008MSD	
Method Blank I.D.	PBLK29	PBLK29	PBLK29	
Dilution Factor	1.00	1.33	1.33	
Aroclor-1016	U	UX	UX	33
Aroclor-1221	U	UX	UX	67
Aroclor-1232	U	UX	UX	33
Aroclor-1242	U	UX	UX	33
Aroclor-1248	U	UX	UX	33
Aroclor-1254	U	UX	UX	33
Aroclor-1260	U	91X	89X	33
Date Received		12/02/94	12/02/94	
Date Extracted	12/06/94	12/06/94	12/06/94	
Date Analyzed	12/13/94	12/13/94	12/13/94	

See Appendix for qualifier definitions
Note: Compound detection limit = quantitation limit x dilution factor

Soil

TABLE GC-1.1
3094-1368
GERAGHTY & MILLER
POLYCHLORINATED BIPHENYLS (PCB's)

All values are ug/Kg dry weight basis.

Client Sample I.D.	PBM-2			Quant. Limits with no Dilution
Lab Sample I.D.	1368009			
Method Blank I.D.	PBLK29			
Dilution Factor	1.35			
Aroclor-1016	U			33
Aroclor-1221	U			67
Aroclor-1232	U			33
Aroclor-1242	U			33
Aroclor-1248	U			33
Aroclor-1254	U			33
Aroclor-1260	U			33
Date Received	12/02/94			
Date Extracted	12/06/94			
Date Analyzed	12/13/94			

See Appendix for qualifier definitions
Note: Compound detection limit = quantitation limit x dilution factor

TABLE GC-1.2
3094-1368
GERAGHTY & MILLER
POLYCHLORINATED BIPHENYLS (PCB's)

Soil

All values are ug/Kg dry weight basis.

Client Sample I.D.	Method Blank	PBM-1		Quant. Limits with no Dilution
Lab Sample I.D.	120894-B05	1368008		
Method Blank I.D.	PBLK37	PBLK37		
Dilution Factor	1.00	1.33		
Aroclor-1016	U	U		33
Aroclor-1221	U	U		67
Aroclor-1232	U	U		33
Aroclor-1242	U	U		33
Aroclor-1248	U	U		33
Aroclor-1254	U	U		33
Aroclor-1260	U	U		33
Date Received		12/02/94		
Date Extracted	12/08/94	12/08/94		
Date Analyzed	12/13/94	12/13/94		

See Appendix for qualifier definitions
Note: Compound detection limit = quantitation limit x dilution factor

Soil

TABLE AS-1.0
3094-1368
GERAGHTY & MILLER
EPA TAL METALS

All values are mg/Kg dry weight basis.

Client Sample I.D.	MW-6	MW-6 D	MW-6 S	MW-3I
Lab Sample I.D.	1368002	1368002D	1368002S	1368003
Aluminum	4600	4770	4580	6630
Antimony	8.4UN	10.3B	75.2N	8.2UN
Arsenic	3.6	3.2	11.8	2.0B
Barium	37.7B	35.9B	406.	33.3B
Beryllium	0.26B	0.22U	9.0	0.27B
Cadmium	0.44U	0.44U	10.1	0.43U
Calcium	50800*	54800	NR	41700*
Chromium	11.1	6.2	44.6	10.1
Cobalt	5.9B	6.2B	97.8	4.6B
Copper	15.4	14.5	58.3	8.4
Cyanide	0.53UN	0.54U	3.8N	0.54UN
Iron	11700	10800	10100	12100
Lead	3.2	3.2	6.9	2.3+S
Magnesium	13600*	14400	NR	17200*
Manganese	458.*N	397.	466.	332.*N
Mercury	0.10U	0.10U	0.55	0.11U
Nickel	11.6	12.4	100.	13.8
Potassium	589.B	779.B	NR	986.B
Selenium	0.22U	0.22U	1.7	0.22U
Silver	0.67U	0.67U	9.2	0.64U
Sodium	76.8B	70.8B	NR	80.1B
Thallium	0.38B	0.22U	10.3	0.22U
Vanadium	7.1B	7.1B	99.3	9.5B
Zinc	24.0	22.0	113.	22.7

See Appendix for qualifier definitions

Soil

TABLE AS-1.1
3094-1368
GERAGHTY & MILLER
EPA TAL METALS

All values are mg/Kg dry weight basis.

Client Sample I.D.	MW-4I	PSS-11	MW-7	PSB-5
Lab Sample I.D.	1368004	1368007	1368010	1368013
Aluminum	3940	9470	2270	5360
Antimony	8.2UN	10.5UN	8.9UN	9.5UN
Arsenic	2.7	0.28U	1.6BS	2.4B
Barium	29.3B	120.	6.4B	22.8B
Beryllium	0.21U	0.28U	0.23U	0.25U
Cadmium	0.43U	0.55U	0.47U	0.50U
Calcium	52300*	9000*	48300*	27300*
Chromium	5.2	3.2	4.7	6.6
Cobalt	3.9B	2.4B	3.7B	4.4B
Copper	7.7	6.3B	16.9	10.6
Cyanide	0.51UN	0.67UN	0.57UN	0.60UN
Iron	8740	583.	6350	9150
Lead	3.5S	3060	4.4	29.9
Magnesium	14000*	399.B*	16700*	9250*
Manganese	307.*N	14.1*N	244.*N	257.*N
Mercury	0.10U	0.13U	0.094U	0.11U
Nickel	7.0B	3.2B	8.2B	10.B
Potassium	813.B	1980	311.B	630.B
Selenium	0.21U	0.28U	0.23U	0.25U
Silver	0.64U	0.83U	0.70U	0.75U
Sodium	73.0B	4710	75.3B	161.B
Thallium	0.21U	0.28U	0.23U	0.25U
Vanadium	6.9B	2.5B	5.0B	14.3
Zinc	28.4	319.	14.7	22.6

See Appendix for qualifier definitions

TABLE AS-1.2
3094-1368
GERAGHTY & MILLER
EPA TAL METALS

All values are mg/Kg dry weight basis.

Client Sample I.D.	PSB-5 D	PSB-5 S	PSB-4	PSB-1
Lab Sample I.D.	1368013D	1368013S	1368014	1368017
Aluminum	4870	4390	3920	7320
Antimony	9.5U	84.0N	9.5UN	9.1UN
Arsenic	2.5	12.5	4.4	5.9
Barium	22.3B	450.	38.2B	57.2
Beryllium	0.33B	11.3	0.25U	0.29B
Cadmium	0.50U	11.8	0.50U	0.48U
Calcium	46100*	NR	37800*	42200*
Chromium	7.3	50.2	6.2	10.5
Cobalt	6.0B	109.	3.3B	7.2B
Copper	11.2	62.2	10.2	16.4
Cyanide	0.62U	6.1	0.60UN	0.58UN
Iron	11000	9170	8340	16800
Lead	17.8B	39.8	3.8	6.8S
Magnesium	14900*	NR	15100*	14800*
Manganese	458.*	452.N	296.*N	422.*N
Mercury	0.10U	0.61	0.12U	0.11U
Nickel	12.6	111.	5.6B	16.2
Potassium	522.B	NR	402.B	846.B
Selenium	0.26U	2.4	0.25U	1.2U
Silver	0.75U	10.9	0.75U	0.72U
Sodium	186.B	NR	102.B	117.B
Thallium	0.25U	12.2	0.25U	0.24U
Vanadium	8.1B	118.	8.6B	15.2
Zinc	28.2	127.	20.0	30.3

See Appendix for qualifier definitions

Soil

TABLE AS-1.3
3094-1368
GERAGHTY & MILLER
EPA TAL METALS

All values are mg/Kg dry weight basis.

Client Sample I.D.	PSB-2	PSB-3		
Lab Sample I.D.	1368018	1368019		
Aluminum	5600	6690		
Antimony	8.6UN	9.4UN		
Arsenic	3.3	1.0BW		
Barium	32.8B	19.7B		
Beryllium	0.26B	0.25U		
Cadmium	0.45U	0.50U		
Calcium	52000*	55600*		
Chromium	6.2	3.3		
Cobalt	5.4B	2.9B		
Copper	16.4	7.9		
Cyanide	0.55UN	0.62UN		
Iron	10500	3410		
Lead	11.6S	426.		
Magnesium	21500*	4910*		
Manganese	362.*N	106.*N		
Mercury	0.094U	0.12U		
Nickel	10.6	4.7B		
Potassium	681.B	868.B		
Selenium	0.23U	0.25U		
Silver	0.68U	0.74U		
Sodium	114.B	1140B		
Thallium	0.23U	0.25U		
Vanadium	11.2B	7.0B		
Zinc	25.6	36.7		

See Appendix for qualifier definitions

ORGANICS APPENDIX

U - Indicates that the compound was analyzed for but not detected.

J - Indicates that the compound was analyzed for and determined to be present in the sample. The mass spectrum of the compound meets the identification criteria of the method. The concentration listed is an estimated value, which is less than the specified minimum detection limit but is greater than zero.

B - This flag is used when the analyte is found in the blanks as well as the sample. It indicates possible sample contamination and warns the data user to use caution when applying the results of this analyte.

N - Indicates that the compound was analyzed for but not requested as an analyte. Value will not be listed on tabular result sheet.

S - Estimated due to surrogate outliers.

X - Matrix spike compound.

(1) - Cannot be separated.

(2) - Decomposes to azobenzene. Measured and calibrated as azobenzene.

A - This flag indicates that a TIC is a suspected aldol condensation product.

E - Indicates that it exceeds calibration curve range.

D - This flag identifies all compounds identified in an analysis at a secondary dilution factor.

C - Confirmed by GC/MS.

T - Compound present in TCLP blank.

P - This flag is used for a pesticide/aroclor target analyte when there is a greater than 25 percent difference for detected concentrations between the two GC columns (see Form X).

INORGANICS APPENDIX

C - Concentration qualifiers

U - Indicates analyte result less than instrument detection limit (IDL)

B - Indicates analyte result between IDL and contract required detection limit (CRDL)

Q - QC qualifiers

E - Reported value is estimated because of the presence of interference

M - Duplicate injection precision not met

N - Spiked sample recovery not within control limits

S - The reported value was determined by the method of standard additions (MSA)

W - Post-digest spike recovery furnace analysis was out of 85-115 percent control limit, while sample absorbance was less than 50 percent of spike absorbance

* - Duplicate analysis not within control limit

+ - Correlation coefficient for MSA is less than 0.995

M - Method codes

P - ICP

A - Flame AA

F - Furnace AA

CV - Cold vapor AA (manual)

C - Cyanide

NR - Not Required

NC - Not Calculated as per protocols

STATE CERTIFICATIONS

In some instances it may be necessary for environmental data to be reported to a regulatory authority with reference to a certified laboratory. For your convenience, the laboratory identification numbers for the IEA-Connecticut laboratory are provided in the following table. Many states certify laboratories for specific parameters or tests within a category (i.e. method 325.2 for wastewater). The information in the following table indicates the lab is certified in a general category of testing such as drinking water or wastewater analysis. The laboratory should be contacted directly if parameter-specific certification information is required.

IEA-Connecticut
Certification Summary (as of June 1993)

State	Responsible Agency	Certification	Lab Number
Connecticut	Department of Health Services	Drinking Water, Wastewater	PH-0497
Kansas	Department of Health and Environmental Services	Drinking Water, Wastewater/Solid, Hazardous Waste	E-210/E-1185
Massachusetts	Department of Environmental Protection	Potable/Non-Potable Water	CT023
New Hampshire	Department of Environmental Services	Drinking Water, Wastewater	252891
New Jersey	Department of Environmental Protection	Drinking Water, Wastewater	46410
New York	Department of Health	CLP, Drinking Water, Wastewater, Solid/ Hazardous Waste	10602
North Carolina	Division of Environmental Management	Wastewater	388
Rhode Island	Department of Health	Chemistry...Non-Potable Water and Wastewater	A43
California	Department of Health Services	Hazardous Waste	1778

TABLE VOA-1.2
3094-1368
GERAGHTY & MILLER
EPA TCL VOLATILES

Aqueous

All values are ug/L.

Client Sample I.D.	TB 120194	FB 120294		Quant. Limits with no Dilution
Lab Sample I.D.	1368012	1368015		
Method Blank I.D.	VBLKDX	VBLKDX		
Dilution Factor	1.00	1.00		
Chloromethane	U	U		10
Bromomethane	U	U		10
Vinyl Chloride	U	U		10
Chloroethane	U	U		10
Methylene Chloride	U	U		10
Acetone	U	U		10
Carbon Disulfide	U	U		10
1,1-Dichloroethene	U	U		10
1,1-Dichloroethane	U	U		10
1,2-Dichloroethene (total)	U	U		10
Chloroform	U	U		10
1,2-Dichloroethane	U	U		10
2-Butanone	U	U		10
1,1,1-Trichloroethane	U	U		10
Carbon Tetrachloride	U	U		10
Bromodichloromethane	U	U		10
1,2-Dichloropropane	U	U		10
cis-1,3-Dichloropropene	U	U		10
Trichloroethene	U	U		10
Dibromochloromethane	U	U		10
1,1,2-Trichloroethane	U	U		10
Benzene	U	U		10
trans-1,3-Dichloropropene	U	U		10
Bromoform	U	U		10
4-Methyl-2-Pentanone	U	U		10
2-Hexanone	U	U		10
Tetrachloroethene	U	U		10
1,1,2,2-Tetrachloroethane	U	U		10
Toluene	U	U		10
Chlorobenzene	U	U		10
Ethylbenzene	U	U		10
Styrene	U	U		10
Xylene (total)	U	U		10
Date Received	12/02/94	12/05/94		
Date Extracted	N/A	N/A		
Date Analyzed	12/06/94	12/06/94		

See Appendix for qualifier definitions
Note: Compound detection limit = quantitation limit x dilution factor

Aqueous

TABLE VOA-1.1
3094-1368
GERAGHTY & MILLER
EPA TCL VOLATILES

All values are ug/L.

Client Sample I.D.	Method Blank	TB 113094	FB 120194	Quant. Limits with no Dilution
Lab Sample I.D.	VBLKDX	1368006	1368011	
Method Blank I.D.	VBLKDX	VBLKDX	VBLKDX	
Dilution Factor	1.00	1.00	1.00	
Chloromethane	U	U	U	10
Bromomethane	U	U	U	10
Vinyl Chloride	U	U	U	10
Chloroethane	U	U	U	10
Methylene Chloride	U	U	U	10
Acetone	20	U	U	10
Carbon Disulfide	U	U	U	10
1,1-Dichloroethene	U	U	U	10
1,1-Dichloroethane	U	U	U	10
1,2-Dichloroethene (total)	U	U	U	10
Chloroform	U	U	U	10
1,2-Dichloroethane	U	U	U	10
2-Butanone	U	U	U	10
1,1,1-Trichloroethane	U	U	U	10
Carbon Tetrachloride	U	U	U	10
Bromodichloromethane	U	U	U	10
1,2-Dichloropropane	U	U	U	10
cis-1,3-Dichloropropene	U	U	U	10
Trichloroethene	U	U	U	10
Dibromochloromethane	U	U	U	10
1,1,2-Trichloroethane	U	U	U	10
Benzene	U	U	U	10
trans-1,3-Dichloropropene	U	U	U	10
Bromoform	U	U	U	10
4-Methyl-2-Pentanone	U	U	U	10
2-Hexanone	U	U	U	10
Tetrachloroethene	U	U	U	10
1,1,2,2-Tetrachloroethane	U	U	U	10
Toluene	U	U	U	10
Chlorobenzene	U	U	U	10
Ethylbenzene	U	U	U	10
Styrene	U	U	U	10
Xylene (total)	U	U	U	10
Date Received		12/01/94	12/02/94	
Date Extracted	N/A	N/A	N/A	
Date Analyzed	12/06/94	12/06/94	12/06/94	

See Appendix for qualifier definitions
Note: Compound detection limit = quantitation limit x dilution factor

TABLE VOA-1.11
3094-1368
GERAGHTY & MILLER
EPA TCL VOLATILES

All values are ug/Kg dry weight basis.

Client Sample I.D.	Method Blank	PSB-1	PSB-2	Quant. Limits with no Dilution
Lab Sample I.D.	VBLKB7	1368017	1368018	
Method Blank I.D.	VBLKB7	VBLKB7	VBLKB7	
Dilution Factor	1.00	1.19	1.14	
Chloromethane	U	U	U	10
Bromomethane	U	U	U	10
Vinyl Chloride	U	U	U	10
Chloroethane	U	U	U	10
Methylene Chloride	U	2J	U	10
Acetone	25	36B	24B	10
Carbon Disulfide	U	U	U	10
1,1-Dichloroethene	U	U	U	10
1,1-Dichloroethane	U	U	U	10
1,2-Dichloroethene (total)	U	U	U	10
Chloroform	U	U	U	10
1,2-Dichloroethane	U	U	U	10
2-Butanone	U	3J	U	10
1,1,1-Trichloroethane	U	U	U	10
Carbon Tetrachloride	U	U	U	10
Bromodichloromethane	U	U	U	10
1,2-Dichloropropane	U	U	U	10
cis-1,3-Dichloropropene	U	U	U	10
Trichloroethene	U	U	U	10
Dibromochloromethane	U	U	U	10
1,1,2-Trichloroethane	U	U	U	10
Benzene	U	U	U	10
trans-1,3-Dichloropropene	U	U	U	10
Bromoform	U	U	U	10
4-Methyl-2-Pentanone	U	U	U	10
2-Hexanone	U	U	U	10
Tetrachloroethene	U	U	U	10
1,1,2,2-Tetrachloroethane	U	U	U	10
Toluene	U	2J	3J	10
Chlorobenzene	U	U	U	10
Ethylbenzene	U	U	U	10
Styrene	U	U	U	10
Xylene (total)	U	U	U	10
Date Received		12/07/94	12/07/94	
Date Extracted	N/A	N/A	N/A	
Date Analyzed	12/09/94	12/09/94	12/09/94	

See Appendix for qualifier definitions
Note: Compound detection limit = quantitation limit x dilution factor

Aqueous

TABLE VOA-1.3
3094-1368
GERAGHTY & MILLER
EPA TCL VOLATILES

All values are ug/L.

Client Sample I.D.	Method Blank	TB 120294		Quant. Limits with no Dilution
Lab Sample I.D.	VBLKDY	1368016		
Method Blank I.D.	VBLKDY	VBLKDY		
Dilution Factor	1.00	1.00		
Chloromethane	U	U		10
Bromomethane	U	U		10
Vinyl Chloride	U	U		10
Chloroethane	U	U		10
Methylene Chloride	U	U		10
Acetone	U	U		10
Carbon Disulfide	U	U		10
1,1-Dichloroethene	U	U		10
1,1-Dichloroethane	U	U		10
1,2-Dichloroethene (total)	U	U		10
Chloroform	U	U		10
1,2-Dichloroethane	U	U		10
2-Butanone	U	U		10
1,1,1-Trichloroethane	U	U		10
Carbon Tetrachloride	U	U		10
Bromodichloromethane	U	U		10
1,2-Dichloropropane	U	U		10
cis-1,3-Dichloropropene	U	U		10
Trichloroethene	U	U		10
Dibromochloromethane	U	U		10
1,1,2-Trichloroethane	U	U		10
Benzene	U	U		10
trans-1,3-Dichloropropene	U	U		10
Bromoform	U	U		10
4-Methyl-2-Pentanone	U	U		10
2-Hexanone	U	U		10
Tetrachloroethene	U	U		10
1,1,2,2-Tetrachloroethane	U	U		10
Toluene	U	U		10
Chlorobenzene	U	U		10
Ethylbenzene	U	U		10
Styrene	U	U		10
Xylene (total)	U	U		10
Date Received		12/05/94		
Date Extracted	N/A	N/A		
Date Analyzed	12/07/94	12/07/94		

See Appendix for qualifier definitions
Note: Compound detection limit = quantitation limit x dilution factor

TABLE VOA-1.0
3094-1368
GERAGHTY & MILLER
EPA TCL VOLATILES

Aqueous

All values are ug/L.

Client Sample I.D.	Method Blank	FB 112894	FB 113094	Quant. Limits with no Dilution
Lab Sample I.D.	VBLKGG	1368001	1368005	
Method Blank I.D.	VBLKGG	VBLKGG	VBLKGG	
Dilution Factor	1.00	1.00	1.00	
Chloromethane	U	U	U	10
Bromomethane	U	U	U	10
Vinyl Chloride	U	U	U	10
Chloroethane	U	U	U	10
Methylene Chloride	0.8J	U	U	10
Acetone	4J	U	U	10
Carbon Disulfide	U	U	U	10
1,1-Dichloroethene	U	U	U	10
1,1-Dichloroethane	U	U	U	10
1,2-Dichloroethene (total)	U	U	U	10
Chloroform	1J	U	U	10
1,2-Dichloroethane	U	U	U	10
2-Butanone	U	U	U	10
1,1,1-Trichloroethane	U	U	U	10
Carbon Tetrachloride	U	U	U	10
Bromodichloromethane	U	U	U	10
1,2-Dichloropropane	U	U	U	10
cis-1,3-Dichloropropene	U	U	U	10
Trichloroethene	U	U	U	10
Dibromochloromethane	U	U	U	10
1,1,2-Trichloroethane	U	U	U	10
Benzene	U	U	U	10
trans-1,3-Dichloropropene	U	U	U	10
Bromoform	U	U	U	10
4-Methyl-2-Pentanone	U	U	U	10
2-Hexanone	U	U	U	10
Tetrachloroethene	U	U	U	10
1,1,2,2-Tetrachloroethane	U	U	U	10
Toluene	U	U	U	10
Chlorobenzene	U	U	U	10
Ethylbenzene	U	U	U	10
Styrene	U	U	U	10
Xylene (total)	U	U	U	10
Date Received		11/30/94	12/01/94	
Date Extracted	N/A	N/A	N/A	
Date Analyzed	12/03/94	12/03/94	12/03/94	

See Appendix for qualifier definitions
Note: Compound detection limit = quantitation limit x dilution factor

TABLE VOA-1.4
3094-1368
GERAGHTY & MILLER
EPA TCL VOLATILES

Aqueous

All values are ug/L.

Client Sample I.D.	Method Blank	TB 120694		Quant. Limits with no Dilution
Lab Sample I.D.	VBLKD2	1368020		
Method Blank I.D.	VBLKD2	VBLKD2		
Dilution Factor	1.00	1.00		
Chloromethane	U	U		10
Bromomethane	U	U		10
Vinyl Chloride	U	U		10
Chloroethane	U	U		10
Methylene Chloride	U	U		10
Acetone	U	U		10
Carbon Disulfide	U	U		10
1,1-Dichloroethene	U	U		10
1,1-Dichloroethane	U	U		10
1,2-Dichloroethene (total)	U	U		10
Chloroform	U	U		10
1,2-Dichloroethane	U	U		10
2-Butanone	U	U		10
1,1,1-Trichloroethane	U	U		10
Carbon Tetrachloride	U	U		10
Bromodichloromethane	U	U		10
1,2-Dichloropropane	U	U		10
cis-1,3-Dichloropropene	U	U		10
Trichloroethene	U	U		10
Dibromochloromethane	U	U		10
1,1,2-Trichloroethane	U	U		10
Benzene	U	U		10
trans-1,3-Dichloropropene	U	U		10
Bromoform	U	U		10
4-Methyl-2-Pentanone	U	U		10
2-Hexanone	U	U		10
Tetrachloroethene	U	U		10
1,1,2,2-Tetrachloroethane	U	U		10
Toluene	U	U		10
Chlorobenzene	U	U		10
Ethylbenzene	U	U		10
Styrene	U	U		10
Xylene (total)	U	U		10
Date Received		12/07/94		
Date Extracted	N/A	N/A		
Date Analyzed	12/09/94	12/09/94		

See Appendix for qualifier definitions
Note: Compound detection limit = quantitation limit x dilution factor

TABLE VOA-1.5
3094-1368
GERAGHTY & MILLER
EPA TCL VOLATILES

All values are ug/Kg dry weight basis.

Client Sample I.D.	Method Blank	MW-6	MW-6 MS	Quant. Limits with no Dilution
Lab Sample I.D.	VBLKB3	1368002	1368002MS	
Method Blank I.D.	VBLKB3	VBLKB3	VBLKB3	
Dilution Factor	1.00	1.12	1.12	
Chloromethane	U	U	U	10
Bromomethane	U	U	U	10
Vinyl Chloride	U	U	U	10
Chloroethane	U	U	U	10
Methylene Chloride	U	U	U	10
Acetone	U	39	81	10
Carbon Disulfide	U	U	U	10
1,1-Dichloroethene	U	U	56X	10
1,1-Dichloroethane	U	U	U	10
1,2-Dichloroethene (total)	U	U	U	10
Chloroform	U	U	U	10
1,2-Dichloroethane	U	U	U	10
2-Butanone	U	U	3J	10
1,1,1-Trichloroethane	U	U	U	10
Carbon Tetrachloride	U	U	U	10
Bromodichloromethane	U	U	U	10
1,2-Dichloropropane	U	U	U	10
cis-1,3-Dichloropropene	U	U	U	10
Trichloroethene	U	U	62X	10
Dibromochloromethane	U	U	U	10
1,1,2-Trichloroethane	U	U	U	10
Benzene	U	U	57X	10
trans-1,3-Dichloropropene	U	U	U	10
Bromoform	U	U	U	10
4-Methyl-2-Pentanone	U	U	U	10
2-Hexanone	U	U	U	10
Tetrachloroethene	U	U	U	10
1,1,2,2-Tetrachloroethane	U	U	U	10
Toluene	U	2J	61X	10
Chlorobenzene	U	U	60X	10
Ethylbenzene	U	U	U	10
Styrene	U	U	U	10
Xylene (total)	U	U	U	10
Date Received		11/30/94	11/30/94	
Date Extracted	N/A	N/A	N/A	
Date Analyzed	12/05/94	12/05/94	12/05/94	

See Appendix for qualifier definitions
Note: Compound detection limit = quantitation limit x dilution factor

TABLE VOA-1.0
3094-1368A
GERAGHTY & MILLER
EPA TCL VOLATILES

Aqueous

All values are ug/L.

Client Sample I.D.	Method Blank	FB 120694	PSW-7	Quant. Limits with no Dilution
Lab Sample I.D.	VBLKD2	1368021	1368024	
Method Blank I.D.	VBLKD2	VBLKD2	VBLKD2	
Dilution Factor	1.00	1.00	1.00	
Chloromethane	U	U	U	10
Bromomethane	U	U	U	10
Vinyl Chloride	U	U	U	10
Chloroethane	U	U	U	10
Methylene Chloride	U	U	U	10
Acetone	U	U	U	10
Carbon Disulfide	U	U	U	10
1,1-Dichloroethene	U	U	U	10
1,1-Dichloroethane	U	U	U	10
1,2-Dichloroethene (total)	U	U	U	10
Chloroform	U	U	U	10
1,2-Dichloroethane	U	U	U	10
2-Butanone	U	U	U	10
1,1,1-Trichloroethane	U	U	U	10
Carbon Tetrachloride	U	U	U	10
Bromodichloromethane	U	U	U	10
1,2-Dichloropropane	U	U	U	10
cis-1,3-Dichloropropene	U	U	U	10
Trichloroethene	U	U	U	10
Dibromochloromethane	U	U	U	10
1,1,2-Trichloroethane	U	U	U	10
Benzene	U	U	U	10
trans-1,3-Dichloropropene	U	U	U	10
Bromoform	U	U	U	10
4-Methyl-2-Pentanone	U	U	U	10
2-Hexanone	U	U	U	10
Tetrachloroethene	U	U	U	10
1,1,2,2-Tetrachloroethane	U	U	U	10
Toluene	U	2J	U	10
Chlorobenzene	U	U	U	10
Ethylbenzene	U	U	U	10
Styrene	U	U	U	10
Xylene (total)	U	U	U	10
Date Received		12/07/94	12/08/94	
Date Extracted	N/A	N/A	N/A	
Date Analyzed	12/09/94	12/09/94	12/09/94	

See Appendix for qualifier definitions
Note: Compound detection limit = quantitation limit x dilution factor

TABLE VOA-1.2
3094-1368A
GERAGHTY & MILLER
EPA TCL VOLATILES

Aqueous

All values are ug/L.

Client Sample I.D.	Method Blank	PSW-9 MS	PSW-9 MSD	Quant. Limits with no Dilution
Lab Sample I.D.	VBLKD5	1368031MS	1368031MSD	
Method Blank I.D.	VBLKD5	VBLKD5	VBLKD5	
Dilution Factor	1.00	1.00	1.00	
Chloromethane	U	U	U	10
Bromomethane	U	U	U	10
Vinyl Chloride	U	U	U	10
Chloroethane	U	U	U	10
Methylene Chloride	U	U	U	10
Acetone	U	U	U	10
Carbon Disulfide	U	U	U	10
1,1-Dichloroethene	U	54X	51X	10
1,1-Dichloroethane	U	U	U	10
1,2-Dichloroethene (total)	U	U	U	10
Chloroform	U	9J	9J	10
1,2-Dichloroethane	U	U	U	10
2-Butanone	U	U	U	10
1,1,1-Trichloroethane	U	U	U	10
Carbon Tetrachloride	U	U	U	10
Bromodichloromethane	U	2J	2J	10
1,2-Dichloropropane	U	U	U	10
cis-1,3-Dichloropropene	U	U	U	10
Trichloroethene	U	48X	44X	10
Dibromochloromethane	U	U	U	10
1,1,2-Trichloroethane	U	U	U	10
Benzene	U	50X	46X	10
trans-1,3-Dichloropropene	U	U	U	10
Bromoform	U	U	U	10
4-Methyl-2-Pentanone	U	U	U	10
2-Hexanone	U	U	U	10
Tetrachloroethene	U	U	U	10
1,1,2,2-Tetrachloroethane	U	U	U	10
Toluene	U	52X	47X	10
Chlorobenzene	U	52X	48X	10
Ethylbenzene	U	U	U	10
Styrene	U	U	U	10
Xylene (total)	U	U	U	10
Date Received		12/08/94	12/08/94	
Date Extracted	N/A	N/A	N/A	
Date Analyzed	12/12/94	12/12/94	12/12/94	

See Appendix for qualifier definitions
Note: Compound detection limit = quantitation limit x dilution factor

TABLE VOA-1.1
3094-1368A
GERAGHTY & MILLER
EPA TCL VOLATILES

Aqueous

All values are ug/L.

Client Sample I.D.	PSW-6			Quant. Limits with no Dilution
Lab Sample I.D.	1368026			
Method Blank I.D.	VBLKD2			
Dilution Factor	1.00			
Chloromethane	U			10
Bromomethane	U			10
Vinyl Chloride	U			10
Chloroethane	U			10
Methylene Chloride	U			10
Acetone	U			10
Carbon Disulfide	U			10
1,1-Dichloroethene	U			10
1,1-Dichloroethane	U			10
1,2-Dichloroethene (total)	U			10
Chloroform	U			10
1,2-Dichloroethane	U			10
2-Butanone	U			10
1,1,1-Trichloroethane	U			10
Carbon Tetrachloride	U			10
Bromodichloromethane	U			10
1,2-Dichloropropane	U			10
cis-1,3-Dichloropropene	U			10
Trichloroethene	U			10
Dibromochloromethane	U			10
1,1,2-Trichloroethane	U			10
Benzene	U			10
trans-1,3-Dichloropropene	U			10
Bromoform	U			10
4-Methyl-2-Pentanone	U			10
2-Hexanone	U			10
Tetrachloroethene	U			10
1,1,2,2-Tetrachloroethane	U			10
Toluene	0U			10
Chlorobenzene	U			10
Ethylbenzene	U			10
Styrene	U			10
Xylene (total)	U			10
Date Received	12/08/94			
Date Extracted	N/A			
Date Analyzed	12/09/94			

See Appendix for qualifier definitions
Note: Compound detection limit = quantitation limit x dilution factor

TABLE VOA-1.3
3094-1368A
GERAGHTY & MILLER
EPA TCL VOLATILES

Aqueous

All values are ug/L.

Client Sample I.D.	Method Blank	PSW-5	PSW-8	Quant. Limits with no Dilution
Lab Sample I.D.	VBLKD3	1368022	1368029	
Method Blank I.D.	VBLKD3	VBLKD3	VBLKD3	
Dilution Factor	1.00	1.00	1.00	
Chloromethane	U	U	U	10
Bromomethane	U	U	U	10
Vinyl Chloride	U	U	U	10
Chloroethane	U	U	U	10
Methylene Chloride	U	U	U	10
Acetone	U	U	U	10
Carbon Disulfide	U	U	U	10
1,1-Dichloroethene	U	U	U	10
1,1-Dichloroethane	U	U	U	10
1,2-Dichloroethene (total)	U	U	U	10
Chloroform	U	8J	8J	10
1,2-Dichloroethane	U	U	U	10
2-Butanone	U	U	U	10
1,1,1-Trichloroethane	U	U	U	10
Carbon Tetrachloride	U	U	U	10
Bromodichloromethane	U	U	2J	10
1,2-Dichloropropane	U	U	U	10
cis-1,3-Dichloropropene	U	U	U	10
Trichloroethene	U	U	U	10
Dibromochloromethane	U	U	U	10
1,1,2-Trichloroethane	U	U	U	10
Benzene	U	U	U	10
trans-1,3-Dichloropropene	U	U	U	10
Bromoform	U	U	U	10
4-Methyl-2-Pentanone	U	U	U	10
2-Hexanone	U	U	U	10
Tetrachloroethene	U	U	U	10
1,1,2,2-Tetrachloroethane	U	U	U	10
Toluene	U	U	U	10
Chlorobenzene	U	U	U	10
Ethylbenzene	U	U	U	10
Styrene	U	U	U	10
Xylene (total)	U	U	U	10
Date Received		12/08/94	12/08/94	
Date Extracted	N/A	N/A	N/A	
Date Analyzed	12/09/94	12/10/94	12/10/94	

See Appendix for qualifier definitions
Note: Compound detection limit = quantitation limit x dilution factor

Aqueous

TABLE VOA-1.4
3094-1368A
GERAGHTY & MILLER
EPA TCL VOLATILES

All values are ug/L.

Client Sample I.D.	PSW-9	PSW-10	PSW-12	Quant. Limits with no Dilution
Lab Sample I.D.	1368031	1368033	1368035	
Method Blank I.D.	VBLKD3	VBLKD3	VBLKD3	
Dilution Factor	1.00	1.00	1.00	
Chloromethane	U	U	U	10
Bromomethane	U	U	U	10
Vinyl Chloride	U	U	U	10
Chloroethane	U	U	U	10
Methylene Chloride	U	U	U	10
Acetone	U	U	U	10
Carbon Disulfide	U	U	U	10
1,1-Dichloroethene	U	U	U	10
1,1-Dichloroethane	U	U	U	10
1,2-Dichloroethene (total)	U	U	U	10
Chloroform	9J	10	8J	10
1,2-Dichloroethane	U	U	U	10
2-Butanone	U	U	U	10
1,1,1-Trichloroethane	U	U	U	10
Carbon Tetrachloride	U	U	U	10
Bromodichloromethane	2J	2J	2J	10
1,2-Dichloropropane	U	U	U	10
cis-1,3-Dichloropropene	U	U	U	10
Trichloroethene	U	U	U	10
Dibromochloromethane	U	U	U	10
1,1,2-Trichloroethane	U	U	U	10
Benzene	U	U	U	10
trans-1,3-Dichloropropene	U	U	U	10
Bromoform	U	U	U	10
4-Methyl-2-Pentanone	U	U	U	10
2-Hexanone	U	U	U	10
Tetrachloroethene	U	U	U	10
1,1,2,2-Tetrachloroethane	U	U	U	10
Toluene	U	U	U	10
Chlorobenzene	U	U	U	10
Ethylbenzene	U	U	U	10
Styrene	U	U	U	10
Xylene (total)	U	U	U	10
Date Received	12/08/94	12/08/94	12/08/94	
Date Extracted	N/A	N/A	N/A	
Date Analyzed	12/10/94	12/10/94	12/10/94	

See Appendix for qualifier definitions
Note: Compound detection limit = quantitation limit x dilution factor

TABLE VOA-1.5
3094-1368A
GERAGHTY & MILLER
EPA TCL VOLATILES

Aqueous

All values are ug/L.

Client Sample I.D.	FB 120794	TB 120794	DUP	Quant. Limits with no Dilution
Lab Sample I.D.	1368036	1368037	1368038	
Method Blank I.D.	VBLKD3	VBLKD3	VBLKD3	
Dilution Factor	1.00	1.00	1.00	
Chloromethane	U	U	U	10
Bromomethane	U	U	U	10
Vinyl Chloride	U	U	U	10
Chloroethane	U	U	U	10
Methylene Chloride	U	U	U	10
Acetone	U	U	U	10
Carbon Disulfide	U	U	U	10
1,1-Dichloroethene	U	U	U	10
1,1-Dichloroethane	U	U	U	10
1,2-Dichloroethene (total)	U	U	U	10
Chloroform	U	1J	9J	10
1,2-Dichloroethane	U	U	U	10
2-Butanone	U	U	U	10
1,1,1-Trichloroethane	U	U	U	10
Carbon Tetrachloride	U	U	U	10
Bromodichloromethane	U	U	2J	10
1,2-Dichloropropane	U	U	U	10
cis-1,3-Dichloropropene	U	U	U	10
Trichloroethene	U	U	U	10
Dibromochloromethane	U	U	U	10
1,1,2-Trichloroethane	U	U	U	10
Benzene	U	U	U	10
trans-1,3-Dichloropropene	U	U	U	10
Bromoform	U	U	U	10
4-Methyl-2-Pentanone	U	U	U	10
2-Hexanone	U	U	U	10
Tetrachloroethene	U	U	U	10
1,1,2,2-Tetrachloroethane	U	U	U	10
Toluene	U	U	U	10
Chlorobenzene	U	U	U	10
Ethylbenzene	U	U	U	10
Styrene	U	U	U	10
Xylene (total)	U	U	U	10
Date Received	12/08/94	12/08/94	12/08/94	
Date Extracted	N/A	N/A	N/A	
Date Analyzed	12/09/94	12/09/94	12/10/94	

See Appendix for qualifier definitions
Note: Compound detection limit = quantitation limit x dilution factor

TABLE VOA-1.6
3094-1368A
GERAGHTY & MILLER
EPA TCL VOLATILES

Soil

All values are ug/Kg dry weight basis.

Client Sample I.D.	Method Blank	PSS-5	PSS-7	Quant. Limits with no Dilution
Lab Sample I.D.	VBLKB7	1368023	1368025	
Method Blank I.D.	VBLKB7	VBLKB7	VBLKB7	
Dilution Factor	1.00	1.30	1.54	
Chloromethane	0.5J	U	U	10
Bromomethane	U	U	U	10
Vinyl Chloride	U	U	U	10
Chloroethane	U	U	U	10
Methylene Chloride	U	2J	U	10
Acetone	25	30B	17B	10
Carbon Disulfide	U	4J	U	10
1,1-Dichloroethene	U	U	U	10
1,1-Dichloroethane	U	U	U	10
1,2-Dichloroethene (total)	U	U	U	10
Chloroform	U	U	U	10
1,2-Dichloroethane	U	U	U	10
2-Butanone	U	U	U	10
1,1,1-Trichloroethane	U	U	U	10
Carbon Tetrachloride	U	U	U	10
Bromodichloromethane	U	U	U	10
1,2-Dichloropropane	U	U	U	10
cis-1,3-Dichloropropene	U	U	U	10
Trichloroethene	U	U	U	10
Dibromochloromethane	U	U	U	10
1,1,2-Trichloroethane	U	U	U	10
Benzene	U	U	U	10
trans-1,3-Dichloropropene	U	U	U	10
Bromoform	U	U	U	10
4-Methyl-2-Pentanone	U	U	U	10
2-Hexanone	U	U	U	10
Tetrachloroethene	U	U	U	10
1,1,2,2-Tetrachloroethane	U	U	U	10
Toluene	U	U	U	10
Chlorobenzene	U	U	U	10
Ethylbenzene	U	U	U	10
Styrene	U	U	U	10
Xylene (total)	U	U	U	10
Date Received		12/08/94	12/08/94	
Date Extracted	N/A	N/A	N/A	
Date Analyzed	12/09/94	12/09/94	12/09/94	

See Appendix for qualifier definitions
Note: Compound detection limit = quantitation limit x dilution factor

TABLE VOA-1.7
3094-1368A
GERAGHTY & MILLER
EPA TCL VOLATILES

All values are ug/Kg dry weight basis.

Client Sample I.D.	PSS-6	PSS-8	PSS-9	Quant. Limits with no Dilution
Lab Sample I.D.	1368027	1368028	1368030	
Method Blank I.D.	VBLKB7	VBLKB7	VBLKB7	
Dilution Factor	1.39	6.25	2.13	
Chloromethane	U	U	U	10
Bromomethane	U	U	U	10
Vinyl Chloride	U	U	U	10
Chloroethane	U	U	U	10
Methylene Chloride	2J	U	3J	10
Acetone	28B	110B	41B	10
Carbon Disulfide	U	14J	U	10
1,1-Dichloroethene	U	U	U	10
1,1-Dichloroethane	U	U	U	10
1,2-Dichloroethene (total)	U	U	U	10
Chloroform	U	U	U	10
1,2-Dichloroethane	U	U	U	10
2-Butanone	U	22J	7J	10
1,1,1-Trichloroethane	U	U	U	10
Carbon Tetrachloride	U	U	U	10
Bromodichloromethane	U	U	U	10
1,2-Dichloropropane	U	U	U	10
cis-1,3-Dichloropropene	U	U	U	10
Trichloroethene	U	U	U	10
Dibromochloromethane	U	U	U	10
1,1,2-Trichloroethane	U	U	U	10
Benzene	U	U	U	10
trans-1,3-Dichloropropene	U	U	U	10
Bromoform	U	U	U	10
4-Methyl-2-Pentanone	U	U	U	10
2-Hexanone	U	U	U	10
Tetrachloroethene	U	U	U	10
1,1,2,2-Tetrachloroethane	U	U	U	10
Toluene	U	U	U	10
Chlorobenzene	U	U	U	10
Ethylbenzene	U	U	U	10
Styrene	U	U	U	10
Xylene (total)	U	U	U	10
Date Received	12/08/94	12/08/94	12/08/94	
Date Extracted	N/A	N/A	N/A	
Date Analyzed	12/09/94	12/09/94	12/09/94	

See Appendix for qualifier definitions
Note: Compound detection limit = quantitation limit x dilution factor

TABLE VOA-1.8
3094-1368A
GERAGHTY & MILLER
EPA TCL VOLATILES

All values are ug/Kg dry weight basis.

Client Sample I.D.	PSS-10	PSS-12		Quant. Limits with no Dilution
Lab Sample I.D.	1368032	1368034		
Method Blank I.D.	VBLKB7	VBLKB7		
Dilution Factor	1.32	2.70		
Chloromethane	U	U		10
Bromomethane	U	U		10
Vinyl Chloride	U	U		10
Chloroethane	U	U		10
Methylene Chloride	U	U		10
Acetone	U	U		10
Carbon Disulfide	U	U		10
1,1-Dichloroethene	U	U		10
1,1-Dichloroethane	U	U		10
1,2-Dichloroethene (total)	U	U		10
Chloroform	U	U		10
1,2-Dichloroethane	U	U		10
2-Butanone	U	U		10
1,1,1-Trichloroethane	U	U		10
Carbon Tetrachloride	U	U		10
Bromodichloromethane	U	U		10
1,2-Dichloropropane	U	U		10
cis-1,3-Dichloropropene	U	U		10
Trichloroethene	U	U		10
Dibromochloromethane	U	U		10
1,1,2-Trichloroethane	U	U		10
Benzene	U	U		10
trans-1,3-Dichloropropene	U	U		10
Bromoform	U	U		10
4-Methyl-2-Pentanone	U	U		10
2-Hexanone	U	U		10
Tetrachloroethene	U	U		10
1,1,2,2-Tetrachloroethane	U	U		10
Toluene	U	U		10
Chlorobenzene	U	U		10
Ethylbenzene	U	U		10
Styrene	U	U		10
Xylene (total)	U	U		10
Date Received	12/08/94	12/08/94		
Date Extracted	N/A	N/A		
Date Analyzed	12/09/94	12/09/94		

See Appendix for qualifier definitions
Note: Compound detection limit = quantitation limit x dilution factor

TABLE VO-2.0
3094-1368A
GERAGHTY & MILLER
VOLATILE TENTATIVELY IDENTIFIED COMPOUNDS

Sample Identification: Method Blank VBLKD2

CAS#	Compound	RT	Estimated Concentration, ug/L
None detected			

Sample Identification: FB 120694

CAS#	Compound	RT	Estimated Concentration, ug/L
None detected			

Sample Identification: PSW-7

CAS#	Compound	RT	Estimated Concentration, ug/L
None detected			

Sample Identification: PSW-6

CAS#	Compound	RT	Estimated Concentration, ug/L
None detected			

Sample Identification: Method Blank VBLKD5

CAS#	Compound	RT	Estimated Concentration, ug/L
None detected			

Sample Identification: Method Blank VBLKD3

CAS#	Compound	RT	Estimated Concentration, ug/L
None detected			

TABLE VO-2.1
3094-1368A
GERAGHTY & MILLER
VOLATILE TENTATIVELY IDENTIFIED COMPOUNDS

Sample Identification: PSW-5

CAS#	Compound	RT	Estimated Concentration, ug/L
	None detected		

Sample Identification: PSW-8

CAS#	Compound	RT	Estimated Concentration, ug/L
	None detected		

Sample Identification: PSW-9

CAS#	Compound	RT	Estimated Concentration, ug/L
	Unknown alkane	22.17	150J
124185	Decane	20.62	90JN
6975980	Decane,2-methyl-	21.66	72JN
	Unknown branched alkane	21.03	43J
	Unknown	22.38	37J
	Unknown branched cycloalkane	21.40	24J
	Unknown branched alkane	21.78	24J
	Unknown	21.99	22J
	Unknown alkane	22.86	20J
	Unknown branched alkane	22.53	15J

Sample Identification: PSW-10

CAS#	Compound	RT	Estimated Concentration, ug/L
	None detected		

See Appendix for qualifier definitions.

TABLE VO-2.2
3094-1368A
GERAGHTY & MILLER
VOLATILE TENTATIVELY IDENTIFIED COMPOUNDS

Sample Identification: PSW-12

CAS#	Compound	RT	Estimated Concentration, ug/L
	None detected		

Sample Identification: FB 120794

CAS#	Compound	RT	Estimated Concentration, ug/L
	None detected		

Sample Identification: TB 120794

CAS#	Compound	RT	Estimated Concentration, ug/L
	None detected		

Sample Identification: DUP

CAS#	Compound	RT	Estimated Concentration, ug/L
	None detected		

Sample Identification: Method Blank VBLKB7

CAS#	Compound	RT	Estimated Concentration, ug/Kg
	None detected		

TABLE VO-2.3
3094-1368A
GERAGHTY & MILLER
VOLATILE TENTATIVELY IDENTIFIED COMPOUNDS

Sample Identification: PSS-5

CAS#	Compound	RT	Estimated Concentration, ug/Kg
	Unknown siloxane	25.93	120J
	Unknown	25.02	59J
	Unknown	25.30	56J
	Unknown	25.57	39J
	Unknown	25.77	36J
	Unknown	26.18	32J
	Unknown	24.44	30J
	Unknown	23.64	29J
	Unknown	23.12	29J
	Unknown	26.35	29J

Sample Identification: PSS-7

CAS#	Compound	RT	Estimated Concentration, ug/Kg
	Unknown	24.88	21J

Sample Identification: PSS-6

CAS#	Compound	RT	Estimated Concentration, ug/Kg
	Unknown	24.91	13J
	Unknown siloxane	25.85	11J

Sample Identification: PSS-8

CAS#	Compound	RT	Estimated Concentration, ug/Kg
	Unknown siloxane	25.91	110J
	Unknown	24.98	85J
556672	Cyclotetrasiloxane,octamethyl	23.04	66JN
	Unknown	25.33	63J
	Unknown branched cycloalkane	25.61	58J

See Appendix for qualifier definitions.

TABLE AS-1.0
3094-1368A
GERAGHTY & MILLER
EPA TAL METALS

Aqueous

All values are ug/L.

Client Sample I.D.	PSW-5	PSW-7	PSW-6	PSW-8
Lab Sample I.D.	1368022	1368024	1368026	1368029
Aluminum	299.	468.	103.B	290.
Antimony	38.0U	38.0U	38.0U	38.0U
Arsenic	1.0U	1.0U	1.0U	1.0U
Barium	31.9B	58.2B	44.8B	31.0B
Beryllium	1.0U	1.0U	1.0U	1.0U
Cadmium	2.0U	2.0U	2.0U	2.0U
Calcium	42500	82000	97500	43200
Chromium	2.0U	2.0U	2.0U	2.0U
Cobalt	3.0U	3.0U	3.0U	3.0U
Copper	16.1B	7.4B	2.4B	10.2B
Cyanide	10.0U	10.0U	10.0U	10.0U
Iron	93.1B	99.9B	206.	97.5B
Lead	22.7	39.7S	30.0	19.8
Magnesium	7810	3360B	13700	8010
Manganese	14.2B	26.1	64.4	15.7
Mercury	0.20U	0.20U	0.20U	0.20U
Nickel	8.0U	8.0U	8.0U	23.6B
Potassium	1500B	6410	3090B	1840B
Selenium	1.0U	1.0U	1.0U	1.0U
Silver	3.0U	3.0U	3.0U	3.0U
Sodium	44200	18800	31000	43800
Thallium	1.0U	1.0U	1.0U	1.0U
Vanadium	7.7B	6.0U	6.0U	6.0U
Zinc	57.4	91.8	13.0B	48.2

See Appendix for qualifier definitions

TABLE AS-1.1
3094-1368A
GERAGHTY & MILLER
EPA TAL METALS

Aqueous

All values are ug/L.

Client Sample I.D.	PSW-9	PSW-9 D	PSW-9 S	PSW-10
Lab Sample I.D.	1368031	1368031D	1368031S	1368033
Aluminum	198.B	172.B	2030	200.
Antimony	38.0U	38.0U	435.	38.0U
Arsenic	1.0U	1.0U	41.8	1.0U
Barium	24.3B	23.8B	1870	28.6B
Beryllium	1.0U	1.0U	46.0	1.0U
Cadmium	2.0U	2.0U	50.2	2.0U
Calcium	30300	29200	NR	37800
Chromium	2.0U	2.0U	189.	2.0U
Cobalt	3.0U	3.0U	460.	3.0U
Copper	5.7B	2.1B	248.	2.4B
Cyanide	10.0U	10.0U	96.2	10.0U
Iron	117.	127.	1040	130.
Lead	22.9	23.0	43.6	22.4
Magnesium	6060	5880	NR	7560
Manganese	6.8B	6.3B	462.	10.7B
Mercury	0.20U	0.20U	0.92B	0.20U
Nickel	8.0U	8.0U	444.	8.0U
Potassium	856.B	987.B	NR	1540B
Selenium	1.0U	1.0U	10.0	1.0U
Silver	3.0U	3.0U	47.6	3.0U
Sodium	26300	25500	NR	43300
Thallium	1.0U	1.0U	47.7	1.0U
Vanadium	6.0U	6.0U	464.	6.0U
Zinc	54.1	54.4	504.	59.8

See Appendix for qualifier definitions

TABLE VO-2.4
3094-1368A
GERAGHTY & MILLER
VOLATILE TENTATIVELY IDENTIFIED COMPOUNDS

Sample Identification: PSS-8 (continued)

CAS#	Compound	RT	Estimated Concentration, ug/Kg
	Unknown	25.75	49J
	Unknown	26.30	41J
	Unknown	24.40	37J
	Unknown	24.04	35J

Sample Identification: PSS-9

CAS#	Compound	RT	Estimated Concentration, ug/Kg
	Unknown	26.29	180J
	Unknown	25.71	170J
	Unknown branched alkane	25.91	110J
	Unknown	24.58	100J
	Unknown	23.56	97J
	Unknown branched alkane	24.00	97J
	Unknown branched alkane	24.36	92J
	Unknown	25.33	89J
	Unknown	26.13	71J
	Unknown alkane	25.41	61J

Sample Identification: PSS-10

CAS#	Compound	RT	Estimated Concentration, ug/Kg
	Unknown alkane	25.01	13J

Sample Identification: PSS-12

CAS#	Compound	RT	Estimated Concentration, ug/Kg
	None detected		

See Appendix for qualifier definitions.

Aqueous

TABLE AS-1.2
3094-1368A
GERAGHTY & MILLER
EPA TAL METALS

All values are ug/L.

Client Sample I.D.	PSW-12	DUP		
Lab Sample I.D.	1368035	1368038		
Aluminum	405.	493.		
Antimony	38.0U	38.0U		
Arsenic	1.1B	1.6B		
Barium	38.6B	45.8B		
Beryllium	1.0U	1.0U		
Cadmium	2.0U	2.0U		
Calcium	52200	62200		
Chromium	2.0U	2.0U		
Cobalt	3.0U	3.0U		
Copper	3.6B	4.8B		
Cyanide	10.0U	10.0U		
Iron	148.	143.		
Lead	47.9S	30.8		
Magnesium	9470	11200		
Manganese	15.6	18.1		
Mercury	0.20U	0.20U		
Nickel	8.0U	8.0U		
Potassium	2050B	2600B		
Selenium	1.0U	1.0U		
Silver	34.5	3.0U		
Sodium	52600	61400		
Thallium	1.0U	1.0U		
Vanadium	6.0U	6.0U		
Zinc	70.1	122.		

See Appendix for qualifier definitions

Soil

/

TABLE AS-1.3
3094-1368A
GERAGHTY & MILLER
EPA TAL METALS

All values are mg/Kg dry weight basis.

Client Sample I.D.	PSS-5	PSS-7	PSS-6	PSS-8
Lab Sample I.D.	1368023	1368025	1368027	1368028
Aluminum	7200*	4760*	6860*	10100*
Antimony	11.6UN	11.6UN	10.2UN	43.9UN
Arsenic	1.6B	0.40B	3.2	5.2B
Barium	56.7B	109.	50.7B	61.2B
Beryllium	0.30U	0.30U	0.51B	1.2U
Cadmium	2.1	0.61U	0.54U	2.3U
Calcium	5610	5930	4160	50500
Chromium	6.0	4.0	13.5	14.2
Cobalt	3.5B	4.6B	5.8B	9.2B
Copper	36.4E	6.9BE	3.4BE	76.0E
Cyanide	0.74U	0.72U	0.64U	2.8U
Iron	2260	563.	16100	5500
Lead	5110	639.	51.9	1560
Magnesium	1160B	272.B	2380	3460B
Manganese	36.3	11.1	315.	73.4
Mercury	0.24	0.14	0.12U	0.62
Nickel	7.0B	2.4U	5.8B	9.2U
Potassium	919.B	873.B	651.B	1430B
Selenium	0.64B	0.30U	0.27U	1.5B
Silver	9.1	1.5B	0.81U	4.6B
Sodium	1800	1790	86.6B	1960B
Thallium	0.30U	0.30U	0.27U	1.2U
Vanadium	11.1B	2.6B	20.1	8.9B
Zinc	260.*	328.*	57.1*	708.*

See Appendix for qualifier definitions

TABLE AS-1.4
3094-1368A
GERAGHTY & MILLER
EPA TAL METALS

Soil

All values are mg/Kg dry weight basis.

Client Sample I.D.	PSS-9	PSS-10	PSS-12	
Lab Sample I.D.	1368030	1368032	1368034	
Aluminum	12700*	9270*	15500*	
Antimony	13.2UN	18.6UN	23.2UN	
Arsenic	2.8B	3.2B	7.5	
Barium	113.	64.1B	89.8B	
Beryllium	0.45B	0.57B	0.61U	
Cadmium	1.2B	0.98U	1.2U	
Calcium	35900	124000	8330	
Chromium	18.3	11.0	28.6	
Cobalt	12.1B	5.0B	10.1B	
Copper	31.7E	11.1BE	154.E	
Cyanide	0.86U	1.2U	2.3	
Iron	6520	6330	4900	
Lead	3280	668.	3740	
Magnesium	10300	17200	2470B	
Manganese	176.	189.	61.2	
Mercury	0.31	0.20U	1.1	
Nickel	7.4B	3.9U	39.4	
Potassium	1830	1650B	1540B	
Selenium	0.35U	0.49U	2.0B	
Silver	3.2B	1.5U	31.8	
Sodium	2540	1940B	2640B	
Thallium	0.35U	0.49U	0.61U	
Vanadium	16.5B	23.3B	22.6B	
Zinc	329.*	130.*	746.*	

See Appendix for qualifier definitions

4

Aqueous

August 1995

TABLE AS-1.0
3095-1154
GERAGHTY & MILLER
EPA TAL METALS (Total)

All values are ug/L.

Client Sample I.D.	MW-1	MW-2	MW-3	MW-4
Lab Sample I.D.	1154001	1154002	1154003	1154004
Aluminum	1770	4680	51400	1790
Antimony	33.0U	33.0U	34.9B	33.0U
Arsenic	3.0U	6.3B	107.	3.0U
Barium	49.9B	55.4B	403.	40.3B
Beryllium	1.0U	1.0U	5.1	1.0U
Cadmium	3.0U	3.0U	3.0U	3.0U
Calcium	150000	450000	656000	390000
Chromium	5.2B	7.5B	67.4	3.8B
Cobalt	4.3B	6.4B	47.4B	4.7B
Copper	18.0B	27.6	124.	14.9B
Cyanide	NR	NR	NR	NR
Iron	3350	10900	126000	3000
Lead	4.4	8.9	213.	6.6
Magnesium	41500E	70400E	207000E	24300E
Manganese	123.	1510	3470	5720
Mercury	0.20U	0.20U	0.20U	0.20U
Nickel	7.0U	12.5B	91.1	10.0B
Potassium	1830E	3520E	8560E	4270E
Selenium	5.0B	2.0U	5.8	2.0U
Silver	2.5B	2.0U	2.0U	2.0U
Sodium	14900E	51600E	43500E	40400E
Thallium	4.0U	4.0U	4.0U	4.0U
Vanadium	1.6B	16.1B	93.0	1.0U
Zinc	73.9	85.1	261.	53.5

See Appendix for qualifier definitions

5

Aqueous

August 199

TABLE AS-1.1
3095-1154
GERAGHTY & MILLER
EPA TAL METALS (Total)

All values are ug/L.

Client Sample I.D.	MW-5	MW-6	MW-7	MW-4I
Lab Sample I.D.	1154005	1154006	1154007	1154008
Aluminum	622.	41600	7500	55400
Antimony	33.0U	33.0U	33.0U	49.7B
Arsenic	7.0B	27.6	15.6	41.3
Barium	45.8B	545.	89.6B	590.
Beryllium	1.0U	5.4	1.5B	6.6
Cadmium	3.0U	3.0U	3.0U	3.0U
Calcium	88400	477000	299000	792000
Chromium	3.0U	76.4	13.3	132.
Cobalt	3.0U	60.2	12.3B	61.2
Copper	7.1B	276.	38.8	236.
Cyanide	NR	NR	NR	NR
Iron	1890	85100	17800	117000
Lead	3.4	56.5	292.	99.1
Magnesium	29400E	158000E	53400E	174000E
Manganese	30.9	2790	1450	4570
Mercury	0.20U	0.20B	0.20U	0.20U
Nickel	7.0U	106.	21.2B	155.
Potassium	9010E	10100E	5970E	19400E
Selenium	2.0U	6.0	3.3B	5.5
Silver	2.0U	41.8	2.0U	2.0U
Sodium	68000E	19300E	38300E	30700E
Thallium	4.0U	4.0U	4.0U	4.0U
Vanadium	2.3B	56.9	18.9B	96.7
Zinc	62.1	342.	75.7	419.

See Appendix for qualifier definitions

8 GW
1 Rep
6 SW
5 sed

6

Aqueous
August 1995

TABLE AS-1.2
3095-1154
GERAGHTY & MILLER
EPA TAL METALS (Total)

All values are ug/L.

Client Sample I.D.	REP-1	SW-1	SW-1 D	SW-1 S
Lab Sample I.D.	1154009	1154010	1154010D	1154010S
Aluminum	46600	129.B	124.B	1930
Antimony	33.0U	33.0U	33.0U	446.
Arsenic	35.6	3.0U	3.0U	1940
Barium	541.	36.2B	36.2B	1770
Beryllium	7.2	1.0U	1.0U	42.5
Cadmium	3.0U	3.0U	3.0U	42.2
Calcium	518000	63100	62500	NR
Chromium	87.6	3.0U	3.0U	173.
Cobalt	63.0	3.0U	3.0U	424.
Copper	260.	15.7B	8.6B	221.
Cyanide	NR	10.0U	10.0U	99.3
Iron	95500	269.	267.	1150
Lead	56.9	51.3	51.0	543.
Magnesium	179000E	9320E	9250	NR
Manganese	3080	19.9	17.2	441.
Mercury	0.20U	0.20U	0.20U	1.2B
Nickel	119.	7.0U	7.0U	425.
Potassium	10100E	2050E	2070	NR
Selenium	6.9	2.0U	2.5B	1860
Silver	4.0B	2.7B	2.5B	44.2
Sodium	21700E	22100E	22000	NR
Thallium	4.0U	4.0U	4.0U	2040
Vanadium	58.1	7.1B	7.5B	428.
Zinc	342.	39.6	36.0	445.

See Appendix for qualifier definitions

7

Aqueous
August 1995

TABLE AS-1.3
3095-1154
GERAGHTY & MILLER
EPA TAL METALS (Total)

All values are ug/L.

Client Sample I.D.	SW-2	SW-2A	SW-3	SW-4
Lab Sample I.D.	1154012	1154014	1154016	1154018
Aluminum	173.B	NR	139.B	533.
Antimony	33.0U	NR	33.0U	33.0U
Arsenic	3.0U	NR	3.0U	6.4B
Barium	33.2B	NR	38.6B	52.0B
Beryllium	1.0U	NR	1.0U	1.0U
Cadmium	3.0U	NR	3.0U	3.0U
Calcium	36200	NR	37000	39100
Chromium	3.0U	NR	3.0U	4.2B
Cobalt	3.0U	NR	3.0U	3.0U
Copper	12.8B	NR	6.5B	9.0B
Cyanide	10.0U	NR	10.0U	10.0U
Iron	301.	NR	194.	2360
Lead	79.9	2100	41.3	315.
Magnesium	7190E	NR	7850E	8130E
Manganese	18.3	NR	18.9	259.
Mercury	0.20U	NR	0.20U	0.20U
Nickel	7.0U	NR	7.0U	7.0U
Potassium	1670E	NR	1730E	2140E
Selenium	2.0U	NR	2.0U	2.0U
Silver	2.0U	NR	2.0U	2.3B
Sodium	19300E	NR	19200E	19600E
Thallium	4.0U	NR	4.0U	4.0U
Vanadium	3.1B	NR	2.4B	1.8B
Zinc	23.3	NR	18.6B	52.4

See Appendix for qualifier definitions

8

Aqueous
August 1995

TABLE AS-1.4
3095-1154
GERAGHTY & MILLER
EPA TAL METALS (Total)

All values are ug/L.

Client Sample I.D.	SW-4A			
Lab Sample I.D.	1154020			
Aluminum	NR			
Antimony	NR			
Arsenic	NR			
Barium	NR			
Beryllium	NR			
Cadmium	NR			
Calcium	NR			
Chromium	NR			
Cobalt	NR			
Copper	NR			
Cyanide	NR			
Iron	NR			
Lead	103.			
Magnesium	NR			
Manganese	NR			
Mercury	NR			
Nickel	NR			
Potassium	NR			
Selenium	NR			
Silver	NR			
Sodium	NR			
Thallium	NR			
Vanadium	NR			
Zinc	NR			

See Appendix for qualifier definitions

9

Soil

August 1995

TABLE AS-1.5
3095-1154
GERAGHTY & MILLER
EPA TAL METALS

All values are mg/Kg dry weight basis.

Client Sample I.D.	SED-1	SED-1 D	SED-1 S	SED-2
Lab Sample I.D.	1154011	1154011D	1154011S	1154013
Aluminum	10500	10900	17100	11600
Antimony	2.4UN	2.5U	188.N	4.2BN
Arsenic	44.3	35.3	1600	64.1
Barium	86.4B	86.1B	1690	148.B
Beryllium	0.81U	1.5B	39.9	1.1U
Cadmium	2.5B	3.2B	43.5	3.2B
Calcium	33000	30200	NR	10900
Chromium	32.1	30.4	187.	29.8
Cobalt	4.6B	5.2B	392.	4.6B
Copper	80.4	81.2	277.	64.8
Cyanide	2.2UN	2.2U	4.5N	2.8UN
Iron	25700	24300	22500	26500
Lead	3380	3480	3810	4840
Magnesium	5060	4770	NR	2860
Manganese	158.	147.	532.	86.6
Mercury	0.37UN	0.51	3.2N	0.54UN
Nickel	14.2B	15.9B	419.	13.0B
Potassium	853.	952.	NR	685.B
Selenium	4.4	5.1	1490	5.8
Silver	4.1B	4.2B	42.8	5.1B
Sodium	1120	1180	NR	1010B
Thallium	3.2U	3.3U	1640	4.3U
Vanadium	48.1	46.4	436.	44.6B
Zinc	599.N	580.	926.N	796.N

See Appendix for qualifier definitions

18

Soil
August 1995

TABLE AS-1.6
3095-1154
GERAGHTY & MILLER
EPA TAL METALS

All values are mg/Kg dry weight basis.

Client Sample I.D.	SED-2A	SED-3	SED-4	
Lab Sample I.D.	1154015	1154017	1154019	
Aluminum	NR	11800	8080	
Antimony	NR	4.3UN	6.3UN	
Arsenic	NR	48.3	41.1	
Barium	NR	135.B	128.B	
Beryllium	NR	1.4U	2.1U	
Cadmium	NR	3.6B	3.7B	
Calcium	NR	12900	9950	
Chromium	NR	32.0	20.6B	
Cobalt	NR	5.1B	3.8B	
Copper	NR	88.0	57.6	
Cyanide	NR	3.9UN	5.1UN	
Iron	NR	27300	17600	
Lead	2020	4510	3720	
Magnesium	NR	2110	1690B	
Manganese	NR	166.	1540	
Mercury	NR	0.75UN	1.0UN	
Nickel	NR	15.5B	19.0B	
Potassium	NR	900.B	519.B	
Selenium	NR	4.4B	6.8B	
Silver	NR	4.9B	2.1U	
Sodium	NR	1380B	949.B	
Thallium	NR	5.7U	8.4U	
Vanadium	NR	41.3B	45.2B	
Zinc	NR	722.N	775.N	

See Appendix for qualifier definitions

11

Aqueous

August 1995

TABLE AS-2.0
3095-1154
GERAGHTY & MILLER
EPA TAL METALS (Dissolved)

All values are ug/L.

Client Sample I.D.	MW-1	MW-2	MW-3	MW-4
Lab Sample I.D.	1154001	1154002	1154003	1154004
Aluminum	2480	5050	2370	656.
Antimony	5.5B	5.1B	4.0B	3.0U
Arsenic	3.0U	3.0U	3.7B	3.0U
Barium	46.2B	45.6B	45.4B	24.0B
Beryllium	1.0U	1.0U	1.0U	1.0U
Cadmium	1.0U	1.0U	1.0U	1.0U
Calcium	136000E	380000E	157000E	369000E
Chromium	4.0B	6.3B	3.7B	1.9B
Cobalt	3.0U	3.0U	3.0U	3.0U
Copper	2.0U	3.8B	2.0U	2.0U
Iron	1910	3940	2190	590.
Lead	3.1	3.5	5.7	2.8B
Magnesium	35600	54000	43500	24000
Manganese	30.1	278.	472.	2020
Mercury	0.20U	0.20U	0.20U	0.20U
Nickel	3.7B	10.2B	5.4B	5.5B
Potassium	2100E	5930E	2180E	5110E
Selenium	4.1B	2.0U	2.5B	2.0U
Silver	1.0U	1.0U	1.0U	1.0U
Sodium	14700	48300	33400	38700
Thallium	4.0U	4.0U	4.0U	4.0U
Vanadium	1.0U	11.5B	8.5B	1.0U
Zinc	18.8B	16.1B	14.9B	23.8

See Appendix for qualifier definitions

12

Aqueous
August 1995

TABLE AS-2.1
3095-1154
GERAGHTY & MILLER
EPA TAL METALS (Dissolved)

All values are ug/L.

Client Sample I.D.	MW-5	MW-6	MW-7	MW-4I
Lab Sample I.D.	1154005	1154006	1154007	1154008
Aluminum	575.	3040	3130	6460
Antimony	5.3B	4.0B	5.2B	5.0B
Arsenic	3.0U	3.0U	3.0U	3.0U
Barium	43.1B	93.4B	46.6B	58.4B
Beryllium	1.0U	1.0U	1.0U	1.3B
Cadmium	1.0U	1.0U	1.0U	1.0U
Calcium	87800E	92200E	185000E	400000E
Chromium	1.9B	4.7B	4.8B	9.3B
Cobalt	3.0U	3.0U	3.0U	3.0U
Copper	2.0U	2.0U	2.0U	2.7B
Iron	627.	2090	2340	5200
Lead	3.9	3.6	34.2	4.7
Magnesium	29900	20500	11800	48700
Manganese	12.6B	121.	864.	1150
Mercury	0.20U	0.20U	0.20U	0.20U
Nickel	2.7B	5.0B	6.3B	13.6B
Potassium	11300E	2660E	6570E	19700E
Selenium	2.0U	2.0U	2.0U	2.0U
Silver	1.0U	1.0U	1.0U	1.0U
Sodium	62500	17400	34100	26800
Thallium	4.0U	4.0U	4.0U	4.0U
Vanadium	3.3B	3.0B	8.3B	15.3B
Zinc	26.5	56.6	54.9	36.8

See Appendix for qualifier definitions

13

Aqueous

August 1995

TABLE AS-2.2
3095-1154
GERAGHTY & MILLER
EPA TAL METALS (Dissolved)

All values are ug/L.

Client Sample I.D.	REP-1			
Lab Sample I.D.	1154009			
Aluminum	4320			
Antimony	3.9B			
Arsenic	3.0U			
Barium	111.B			
Beryllium	1.2B			
Cadmium	1.0U			
Calcium	90000E			
Chromium	6.2B			
Cobalt	3.0U			
Copper	2.0U			
Iron	2950			
Lead	3.2			
Magnesium	23400			
Manganese	152.			
Mercury	0.20U			
Nickel	7.6B			
Potassium	3480E			
Selenium	2.0U			
Silver	1.0U			
Sodium	15200			
Thallium	4.0U			
Vanadium	3.7B			
Zinc	15.0B			

See Appendix for qualifier definitions

Aqueous

TABLE VO-1.0
3095-0018
GERAGHTY & MILLER
EPA TCL VOLATILE ORGANICS

All values are ug/L.

Client Sample I.D.	Method Blank	MW-6	MW-1	Quant. Limits with no Dilution
Lab Sample I.D.	VBLKDC	0018001	0018002	
Method Blank I.D.	VBLKDC	VBLKDC	VBLKDC	
Dilution Factor	1.00	1.00	1.00	
Chloromethane	U	U	U	10
Bromomethane	U	U	U	10
Vinyl Chloride	U	U	U	10
Chloroethane	U	U	U	10
Methylene Chloride	U	U	U	10
Acetone	U	U	U	10
Carbon Disulfide	U	U	U	10
1,1-Dichloroethene	U	U	U	10
1,1-Dichloroethane	U	U	U	10
1,2-Dichloroethene (total)	U	U	U	10
Chloroform	U	U	U	10
1,2-Dichloroethane	U	U	U	10
2-Butanone	U	U	U	10
1,1,1-Trichloroethane	U	U	U	10
Carbon Tetrachloride	U	U	U	10
Bromodichloromethane	U	U	U	10
1,2-Dichloropropane	U	U	U	10
cis-1,3-Dichloropropene	U	U	U	10
Trichloroethene	U	U	U	10
Dibromochloromethane	U	U	U	10
1,1,2-Trichloroethane	U	U	U	10
Benzene	U	U	U	10
trans-1,3-Dichloropropene	U	U	U	10
Bromoform	U	U	U	10
4-Methyl-2-Pentanone	U	U	U	10
2-Hexanone	U	U	U	10
Tetrachloroethene	U	U	U	10
1,1,2,2-Tetrachloroethane	U	U	U	10
Toluene	U	U	U	10
Chlorobenzene	U	U	U	10
Ethylbenzene	U	U	U	10
Styrene	U	U	U	10
Xylene (total)	U	1J	U	10
Date Received		01/06/95	01/06/95	
Date Extracted	N/A	N/A	N/A	
Date Analyzed	01/09/95	01/09/95	01/09/95	

See Appendix for qualifier definitions
Note: Compound detection limit = quantitation limit x dilution factor

Aqueous

TABLE VO-1.1
3095-0018
GERAGHTY & MILLER
EPA TCL VOLATILE ORGANICS

All values are ug/L.

Client Sample I.D.	MW-1 MS	MW-1 MSB	MW-1 MSD	Quant. Limits with no Dilution
Lab Sample I.D.	0018002MS	0018002MSB	0018002MSD	
Method Blank I.D.	VBLKDC	VBLKDC	VBLKDC	
Dilution Factor	1.00	1.00	1.00	
Chloromethane	U	U	U	10
Bromomethane	U	U	U	10
Vinyl Chloride	U	U	U	10
Chloroethane	U	U	U	10
Methylene Chloride	U	U	U	10
Acetone	U	U	U	10
Carbon Disulfide	U	U	2J	10
1,1-Dichloroethene	56X	53X	56X	10
1,1-Dichloroethane	U	U	U	10
1,2-Dichloroethene (total)	U	U	U	10
Chloroform	U	U	U	10
1,2-Dichloroethane	U	U	U	10
2-Butanone	U	U	U	10
1,1,1-Trichloroethane	U	U	U	10
Carbon Tetrachloride	U	U	U	10
Bromodichloromethane	U	U	U	10
1,2-Dichloropropane	U	U	U	10
cis-1,3-Dichloropropene	U	U	U	10
Trichloroethene	49X	48X	52X	10
Dibromochloromethane	U	U	U	10
1,1,2-Trichloroethane	U	U	U	10
Benzene	51X	50X	55X	10
trans-1,3-Dichloropropene	U	U	U	10
Bromoform	U	U	U	10
4-Methyl-2-Pentanone	U	U	U	10
2-Hexanone	U	U	U	10
Tetrachloroethene	U	U	U	10
1,1,2,2-Tetrachloroethane	U	U	U	10
Toluene	51X	50X	54X	10
Chlorobenzene	51X	51X	53X	10
Ethylbenzene	U	U	U	10
Styrene	U	U	U	10
Xylene (total)	U	U	U	10
Date Received	01/06/95	01/06/95	01/06/95	
Date Extracted	N/A	N/A	N/A	
Date Analyzed	01/10/95	01/09/95	01/10/95	

See Appendix for qualifier definitions
Note: Compound detection limit = quantitation limit x dilution factor

TABLE VO-1.2
3095-0018
GERAGHTY & MILLER
EPA TCL VOLATILE ORGANICS

Aqueous

All values are ug/L.

Client Sample I.D.	MW-5	MW-2	MW-3	Quant. Limits with no Dilution
Lab Sample I.D.	0018003	0018004	0018005	
Method Blank I.D.	VBLKDC	VBLKDC	VBLKDC	
Dilution Factor	1.00	1.00	1.00	
Chloromethane	U	U	U	10
Bromomethane	U	U	U	10
Vinyl Chloride	U	U	U	10
Chloroethane	U	U	U	10
Methylene Chloride	U	U	U	10
Acetone	U	U	U	10
Carbon Disulfide	U	U	U	10
1,1-Dichloroethene	U	U	U	10
1,1-Dichloroethane	U	U	U	10
1,2-Dichloroethene (total)	U	U	U	10
Chloroform	U	U	U	10
1,2-Dichloroethane	U	U	U	10
2-Butanone	U	U	U	10
1,1,1-Trichloroethane	U	U	U	10
Carbon Tetrachloride	U	U	U	10
Bromodichloromethane	U	U	U	10
1,2-Dichloropropane	U	U	U	10
cis-1,3-Dichloropropene	U	U	U	10
Trichloroethene	U	U	U	10
Dibromochloromethane	U	U	U	10
1,1,2-Trichloroethane	U	U	U	10
Benzene	U	U	U	10
trans-1,3-Dichloropropene	U	U	U	10
Bromoform	U	U	U	10
4-Methyl-2-Pentanone	U	U	U	10
2-Hexanone	U	U	U	10
Tetrachloroethene	U	U	U	10
1,1,2,2-Tetrachloroethane	U	U	U	10
Toluene	U	U	U	10
Chlorobenzene	U	U	U	10
Ethylbenzene	U	U	U	10
Styrene	U	U	U	10
Xylene (total)	U	U	0.7J	10
Date Received	01/06/95	01/06/95	01/06/95	
Date Extracted	N/A	N/A	N/A	
Date Analyzed	01/09/95	01/09/95	01/10/95	

See Appendix for qualifier definitions
Note: Compound detection limit = quantitation limit x dilution factor

TABLE VO-1.3
3095-0018
GERAGHTY & MILLER
EPA TCL VOLATILE ORGANICS

Aqueous

All values are ug/L.

Client Sample I.D.	DUP. 1	MW-7	MW-4	Quant. Limits with no Dilution
Lab Sample I.D.	0018006	0018007	0018008	
Method Blank I.D.	VBLKDC	VBLKDC	VBLKDC	
Dilution Factor	1.00	1.00	1.00	
Chloromethane	U	U	U	10
Bromomethane	U	U	U	10
Vinyl Chloride	U	U	U	10
Chloroethane	U	U	U	10
Methylene Chloride	U	U	U	10
Acetone	U	U	U	10
Carbon Disulfide	U	U	U	10
1,1-Dichloroethene	U	U	U	10
1,1-Dichloroethane	U	U	U	10
1,2-Dichloroethene (total)	U	U	U	10
Chloroform	U	U	U	10
1,2-Dichloroethane	U	U	U	10
2-Butanone	U	U	U	10
1,1,1-Trichloroethane	U	U	U	10
Carbon Tetrachloride	U	U	U	10
Bromodichloromethane	U	U	U	10
1,2-Dichloropropane	U	U	U	10
cis-1,3-Dichloropropene	U	U	U	10
Trichloroethene	U	U	U	10
Dibromochloromethane	U	U	U	10
1,1,2-Trichloroethane	U	U	U	10
Benzene	U	U	U	10
trans-1,3-Dichloropropene	U	U	U	10
Bromoform	U	U	U	10
4-Methyl-2-Pentanone	U	U	U	10
2-Hexanone	U	U	U	10
Tetrachloroethene	U	U	U	10
1,1,2,2-Tetrachloroethane	U	U	U	10
Toluene	U	U	U	10
Chlorobenzene	U	U	U	10
Ethylbenzene	U	0.5J	U	10
Styrene	U	U	U	10
Xylene (total)	U	9J	U	10
Date Received	01/06/95	01/06/95	01/06/95	
Date Extracted	N/A	N/A	N/A	
Date Analysed	01/10/95	01/10/95	01/10/95	

See Appendix for qualifier definitions
Note: Compound detection limit = quantitation limit x dilution factor

Aqueous

TABLE VO-1.4
3095-0018
GERAGHTY & MILLER
EPA TCL VOLATILE ORGANICS

All values are ug/L.

Client Sample I.D.	MW-4I	FB 010595	TB 010595	Quant. Limits with no Dilution
Lab Sample I.D.	0018009	0018010	0018011	
Method Blank I.D.	VBLKDC	VBLKDC	VBLKDC	
Dilution Factor	1.00	1.00	1.00	
Chloromethane	U	U	U	10
Bromomethane	U	U	U	10
Vinyl Chloride	U	U	U	10
Chloroethane	U	U	U	10
Methylene Chloride	U	U	U	10
Acetone	U	U	U	10
Carbon Disulfide	U	U	U	10
1,1-Dichloroethene	U	U	U	10
1,1-Dichloroethane	U	U	U	10
1,2-Dichloroethene (total)	U	U	U	10
Chloroform	U	1J	U	10
1,2-Dichloroethane	U	U	U	10
2-Butanone	U	U	U	10
1,1,1-Trichloroethane	U	U	U	10
Carbon Tetrachloride	U	U	U	10
Bromodichloromethane	U	U	U	10
1,2-Dichloropropane	U	U	U	10
cis-1,3-Dichloropropene	U	U	U	10
Trichloroethene	U	U	U	10
Dibromochloromethane	U	U	U	10
1,1,2-Trichloroethane	U	U	U	10
Benzene	U	U	U	10
trans-1,3-Dichloropropene	U	U	U	10
Bromoform	U	U	U	10
4-Methyl-2-Pentanone	U	U	U	10
2-Hexanone	U	U	U	10
Tetrachloroethene	U	U	U	10
1,1,2,2-Tetrachloroethane	U	U	U	10
Toluene	U	U	U	10
Chlorobenzene	U	U	U	10
Ethylbenzene	U	U	U	10
Styrene	U	U	U	10
Xylene (total)	U	U	U	10
Date Received	01/06/95	01/06/95	01/06/95	
Date Extracted	N/A	N/A	N/A	
Date Analyzed	01/10/95	01/09/95	01/09/95	

See Appendix for qualifier definitions
Note: Compound detection limit = quantitation limit x dilution factor

TABLE VO-2.0
3095-0018
GERAGHTY & MILLER
VOLATILE TENTATIVELY IDENTIFIED COMPOUNDS

Sample Identification: Method Blank VBLKDC

CAS#	Compound	RT	Estimated Concentration, ug/L
	None detected		

Sample Identification: MW-6

CAS#	Compound	RT	Estimated Concentration, ug/L
	None detected		

Sample Identification: MW-1

CAS#	Compound	RT	Estimated Concentration, ug/L
	None detected		

Sample Identification: MW-5

CAS#	Compound	RT	Estimated Concentration, ug/L
	None detected		

Sample Identification: MW-2

CAS#	Compound	RT	Estimated Concentration, ug/L
	None detected		

Sample Identification: MW-3

CAS#	Compound	RT	Estimated Concentration, ug/L
	None detected		

TABLE VO-2.1
3095-0018
GERAGHTY & MILLER
VOLATILE TENTATIVELY IDENTIFIED COMPOUNDS

Sample Identification: DUP 1

CAS#	Compound	RT	Estimated Concentration, ug/L
	None detected		

Sample Identification: MW-7

CAS#	Compound	RT	Estimated Concentration, ug/L
	Unknown C_3 alkylbenzene	20.49	9J
	Unknown isomer of benzene, 1-ethyl	19.86	7J

Sample Identification: MW-4

CAS#	Compound	RT	Estimated Concentration, ug/L
	None detected		

Sample Identification: MW-4I

CAS#	Compound	RT	Estimated Concentration, ug/L
	None detected		

Sample Identification: FB 010595

CAS#	Compound	RT	Estimated Concentration, ug/L
	None detected		

See Appendix for qualifier definitions.

TABLE VO-2.2
3095-0018
GERAGHTY & MILLER
VOLATILE TENTATIVELY IDENTIFIED COMPOUNDS

Sample Identification: TB 010595

CAS#	Compound	RT	Estimated Concentration, ug/L
	None detected		

TABLE AS-1.0
3095-0018
GERAGHTY & MILLER
EPA TAL METALS (Dissolved)

Aqueous

All values are ug/L.

Client Sample I.D.	MW-6	MW-1	MW-1 D	MW-1 S
Lab Sample I.D.	0018001	0018002	0018002D	0018002S
Aluminum	6270E	12.0UE	21.4B	2030
Antimony	38.0U	38.0U	38.0U	500.
Arsenic	1.1B	1.0U	1.0U	39.4
Barium	109.B	35.5B	37.3B	1970
Beryllium	1.0U	1.0U	1.0U	44.4
Cadmium	2.0U	2.0U	2.0U	48.3
Calcium	107000	123000	125000	NR
Chromium	4.7B	2.0U	2.0U	177.
Cobalt	6.9B	3.0U	3.0U	448.
Copper	34.9	5.5B	3.5B	228.
Cyanide	NR	NR	NR	NR
Iron	7440E	15.0UE	15.0U	911.
Lead	7.9	23.4	24.3	46.6
Magnesium	29200	33400	34000	NR
Manganese	464.	3.4B	3.3B	460.
Mercury	0.20U	0.20U	0.20U	1.0B
Nickel	14.6B	8.0U	8.0U	422.
Potassium	4060B	517.U	983.B	NR
Selenium	1.0U	2.3B	2.0B	12.0
Silver	3.0U	3.0U	3.0U	44.1
Sodium	12100	21200	21700	NR
Thallium	1.0U	1.0U	1.0U	53.3
Vanadium	6.7B	6.0U	6.0U	455.
Zinc	114.	47.6	47.1	489.

See Appendix for qualifier definitions

Aqueous

TABLE AS-1.1
3095-0018
GERAGHTY & MILLER
EPA TAL METALS (Dissolved)

All values are ug/L.

Client Sample I.D.	MW-5	MW-2	MW-3	DUP. 1
Lab Sample I.D.	0018003	0018004	0018005	0018006
Aluminum	360.E	31.6BE	17.4BE	16.9BE
Antimony	38.0U	38.0U	38.0U	38.0U
Arsenic	2.7B	1.0U	1.6B	1.9B
Barium	38.6B	20.7B	29.6B	31.0B
Beryllium	1.0U	1.0U	1.0U	1.0U
Cadmium	3.5B	2.0U	2.0U	2.0U
Calcium	86800	460000	172000	178000
Chromium	2.0U	2.0U	2.0U	2.0U
Cobalt	3.0U	3.0U	3.0U	3.0U
Copper	7.8B	6.6B	2.9B	2.0U
Cyanide	NR	NR	NR	NR
Iron	716.E	18.2BE	1120E	1160E
Lead	3.0	1.0U	2.2BW	3.0
Magnesium	28900	51400	44300	45700
Manganese	21.3	650.	549.	567.
Mercury	0.20U	0.20U	0.20U	0.20U
Nickel	8.0U	8.0U	8.0U	8.0U
Potassium	8700	517.U	517.U	517.U
Selenium	1.0U	1.0U	1.0U	1.0U
Silver	3.0U	3.0U	3.0U	3.0U
Sodium	69500	41000	29300	30400
Thallium	1.0UW	1.0UW	1.0UW	1.0UW
Vanadium	7.2B	6.0U	6.0U	6.0U
Zinc	80.2	29.7	38.9	40.9

See Appendix for qualifier definitions

Aqueous

TABLE AS-1.2
3095-0018
GERAGHTY & MILLER
EPA TAL METALS (Dissolved)

All values are ug/L.

Client Sample I.D.	MW-7	MW-4	MW-4I	FB 010595
Lab Sample I.D.	0018007	0018008	0018009	0018010
Aluminum	12.0UE	34.5BE	62100E	57.5BE
Antimony	38.0U	38.0U	58.6B	38.0U
Arsenic	1.0B	1.0U	37.2S	1.0U
Barium	25.6B	18.4B	576.	8.0U
Beryllium	1.0U	1.0U	1.0U	1.0U
Cadmium	2.0U	2.0U	3.7B	2.0U
Calcium	231000	403000	741000	856.B
Chromium	2.0U	2.0U	114.	2.0U
Cobalt	5.3B	3.0U	54.4	3.0U
Copper	2.0U	2.0U	197.	2.0U
Cyanide	NR	NR	NR	NR
Iron	2340E	32.4BE	106000E	128.E
Lead	3.7	2.7BW	145.S	1.0UW
Magnesium	14300	23700	165000	163.B
Manganese	1970	1590	4380	7.0B
Mercury	0.20U	0.20U	0.24B	0.20U
Nickel	8.0U	8.0U	132.	8.0U
Potassium	4080B	2920B	28500	517.U
Selenium	1.0U	1.0U	1.7BW	1.0U
Silver	3.0U	3.0U	3.0U	3.0U
Sodium	32900	36000	25900	51.9B
Thallium	1.0UW	1.0UW	1.0UW	1.0U
Vanadium	6.0U	6.0U	94.2	6.0U
Zinc	36.6	51.8	377.	9.8B

See Appendix for qualifier definitions

TABLE AS-1.5
3095-0018
GERAGHTY & MILLER
EPA TAL METALS (Total)

Aqueous

All values are ug/L.

Client Sample I.D.	MW-7	MW-4	MW-4I	FB 010595
Lab Sample I.D.	0018007	0018008	0018009	0018010
Aluminum	9580E	55800E	51800E	49.2BE
Antimony	38.0U	38.0U	38.0U	38.0U
Arsenic	11.1	27.1S	27.4S	1.0U
Barium	90.3B	512.	470.	8.0U
Beryllium	1.0U	1.0U	1.0U	1.0U
Cadmium	2.0U	4.6B	2.0U	2.0U
Calcium	303000	610000	720000	709.B
Chromium	15.9	62.3	95.7	2.0U
Cobalt	11.4B	47.8B	42.4B	3.0U
Copper	19.7B	135.	155.	2.0U
Cyanide	10.0U	10.0U	10.0U	10.0U
Iron	17200E	95800E	85200E	114.E
Lead	216.	51.0S+	71.0S+	1.0U
Magnesium	37200	99400	157000	140.B
Manganese	2530	38200	3920	14.0B
Mercury	0.20U	0.20U	0.20U	0.20U
Nickel	16.1B	106.	108.	8.0U
Potassium	6530	9370	28000	517.U
Selenium	1.0U	1.5BW	2.7BW	1.0U
Silver	3.0U	3.0U	3.0U	3.0U
Sodium	33600	38900	25500	153.B
Thallium	1.0U	1.0UW	1.0UW	1.0U
Vanadium	12.1B	88.3	74.2	6.0U
Zinc	52.4	292.	294.	17.4B

See Appendix for qualifier definitions

APPENDIX H

LEAD MODEL

LEAD MODEL Version 0.99d

IR CONCENTRATION: 0.100 ug Pb/m3 DEFAULT
door AIR Pb Conc: 30.0 percent of outdoor.
ner AIR Parameters:

Age	Time Outdoors (hr)	Vent. Rate (m3/day)	Lung Abs. (%)
0-1	1.0	2.0	32.0
1-2	2.0	3.0	32.0
2-3	3.0	5.0	32.0
3-4	4.0	5.0	32.0
4-5	4.0	5.0	32.0
5-6	4.0	7.0	32.0
6-7	4.0	7.0	32.0

Diet: alternate diet selected by user as follows:

Home-grown Fruit:	0.000 ug Pb/g	0.0 %
Home-grown Vegetables:	0.000 ug Pb/g	0.0 %
Recreational Fish:	1.400 ug Pb/g	5.0 %
Wild Game:	0.000 ug Pb/g	0.0 %

DRINKING WATER Conc: 4.00 ug Pb/L DEFAULT
WATER Consumption: DEFAULT

SOIL & DUST:
Soil: constant conc.
Dust: constant conc.

Age	Soil (ug Pb/g)	House Dust (ug Pb/g)
0-1	200.0	200.0
1-2	200.0	200.0
2-3	200.0	200.0
3-4	200.0	200.0
4-5	200.0	200.0
5-6	200.0	200.0
6-7	200.0	200.0

Additional Dust Sources: None DEFAULT

PAINT Intake: 0.00 ug Pb/day DEFAULT

MATERNAL CONTRIBUTION: Infant Model
Maternal Blood Conc: 2.50 ug Pb/dL

CALCULATED BLOOD Pb and Pb UPTAKES:

YEAR	Blood Level (ug/dL)	Total Uptake (ug/day)	Soil+Dust Uptake (ug/day)
0.5-1:	4.6	8.60	4.62
1-2:	5.5	13.45	7.19
2-3:	5.3	14.31	7.28
3-4:	5.1	14.62	7.38
4-5:	4.5	13.11	5.58
5-6:	4.1	13.07	5.07
6-7:	3.8	13.49	4.80

	Diet Uptake	Water Uptake	Paint Uptake	Air Uptake

YEAR	(ug/day)	(ug/day)	(ug/day)	(ug/day)
.5-1:	3.59	0.36	0.00	0.02
1-2:	5.33	0.89	0.00	0.03
3:	6.04	0.93	0.00	0.06
-4:	6.21	0.97	0.00	0.07
4-5:	6.44	1.02	0.00	0.07
5-6:	6.82	1.09	0.00	0.09
6-7:	7.48	1.11	0.00	0.09

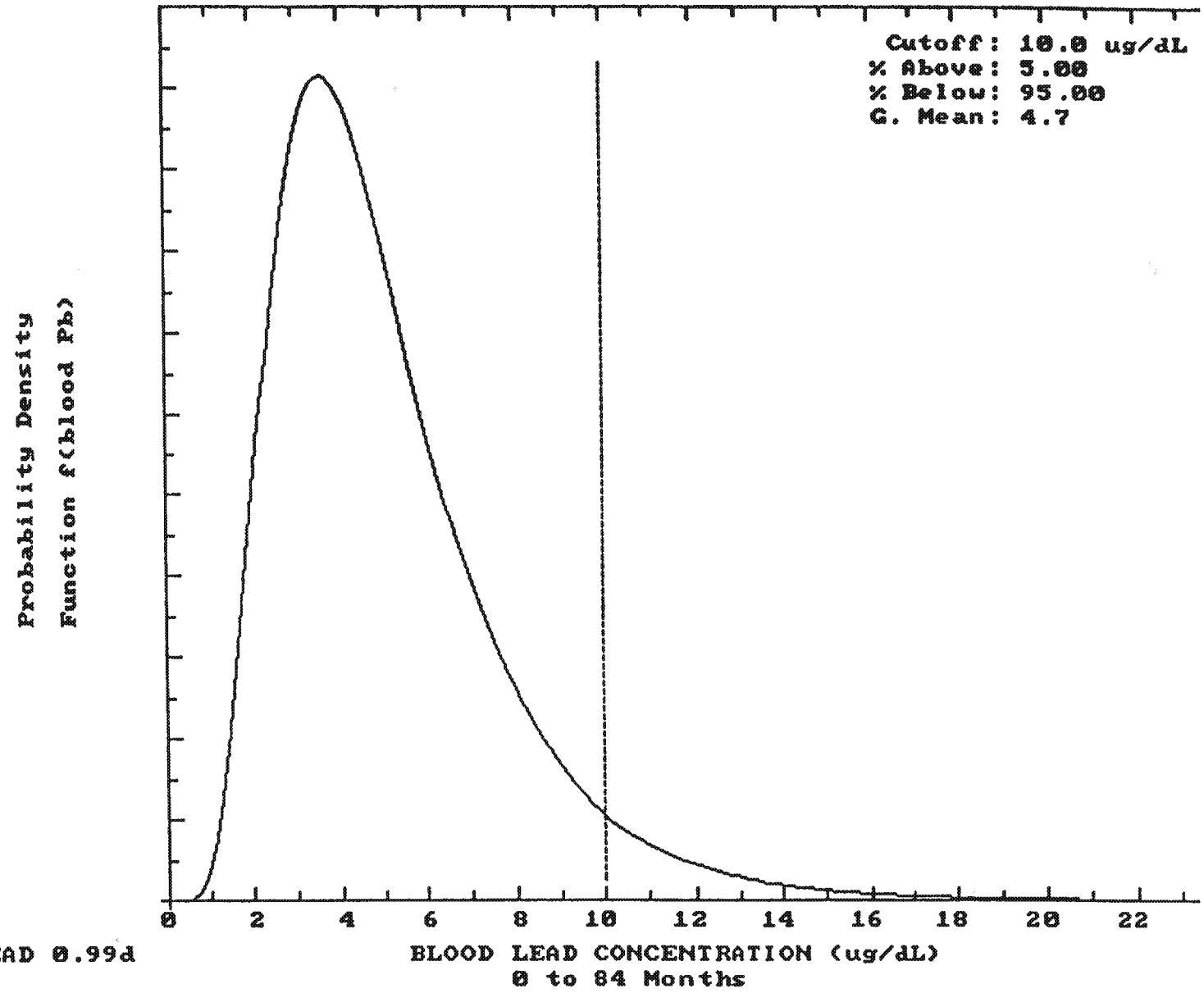
Cutoff: 10.0 ug/dL
% Above: 5.00
% Below: 95.00
G. Mean: 4.7
Probability Density
Function f(blood Pb)
0
2
4
6
8
10
12
14
16
18
20
22
BLOOD LEAD CONCENTRATION (ug/dL)
0 to 84 Months

LEAD 0.99d

LEAD MODEL Version 0.99d

AIR CONCENTRATION: 0.100 ug Pb/m3 DEFAULT
Indoor AIR Pb Conc: 30.0 percent of outdoor.
Other AIR Parameters:

Age	Time Outdoors (hr)	Vent. Rate (m3/day)	Lung Abs. (%)
0-1	1.0	2.0	32.0
1-2	2.0	3.0	32.0
2-3	3.0	5.0	32.0
3-4	4.0	5.0	32.0
4-5	4.0	5.0	32.0
5-6	4.0	7.0	32.0
6-7	4.0	7.0	32.0

Diet: alternate diet selected by user as follows:

Home-grown Fruit:	0.000 ug Pb/g	0.0 %
Home-grown Vegetables:	0.000 ug Pb/g	0.0 %
Recreational Fish:	1.400 ug Pb/g	10.0 %
Wild Game:	0.000 ug Pb/g	0.0 %

DRINKING WATER Conc: 4.00 ug Pb/L DEFAULT
WATER Consumption: DEFAULT

SOIL & DUST:
Soil: constant conc.
Dust: constant conc.

Age	Soil (ug Pb/g)	House Dust (ug Pb/g)
0-1	200.0	200.0
1-2	200.0	200.0
2-3	200.0	200.0
3-4	200.0	200.0
4-5	200.0	200.0
5-6	200.0	200.0
6-7	200.0	200.0

Additional Dust Sources: None DEFAULT

PAINT Intake: 0.00 ug Pb/day DEFAULT

MATERNAL CONTRIBUTION: Infant Model
Maternal Blood Conc: 2.50 ug Pb/dL

CALCULATED BLOOD Pb and Pb UPTAKES:

YEAR	Blood Level (ug/dL)	Total Uptake (ug/day)	Soil+Dust Uptake (ug/day)
0.5-1:	5.1	9.44	4.58
1-2:	6.4	15.81	7.04
2-3:	6.2	16.96	7.13
3-4:	6.1	17.51	7.24
4-5:	5.5	16.30	5.48
5-6:	5.1	16.45	4.98
6-7:	4.8	17.16	4.72

Diet Uptake	Water Uptake	Paint Uptake	Air Uptake

YEAR	(ug/day)	(ug/day)	(ug/day)	(ug/day)
0.5-1:	4.48	0.36	0.00	0.02
1-2:	7.86	0.87	0.00	0.03
2-3:	8.85	0.92	0.00	0.06
3-4:	9.25	0.95	0.00	0.07
4-5:	9.74	1.01	0.00	0.07
5-6:	10.30	1.07	0.00	0.09
6-7:	11.25	1.09	0.00	0.09

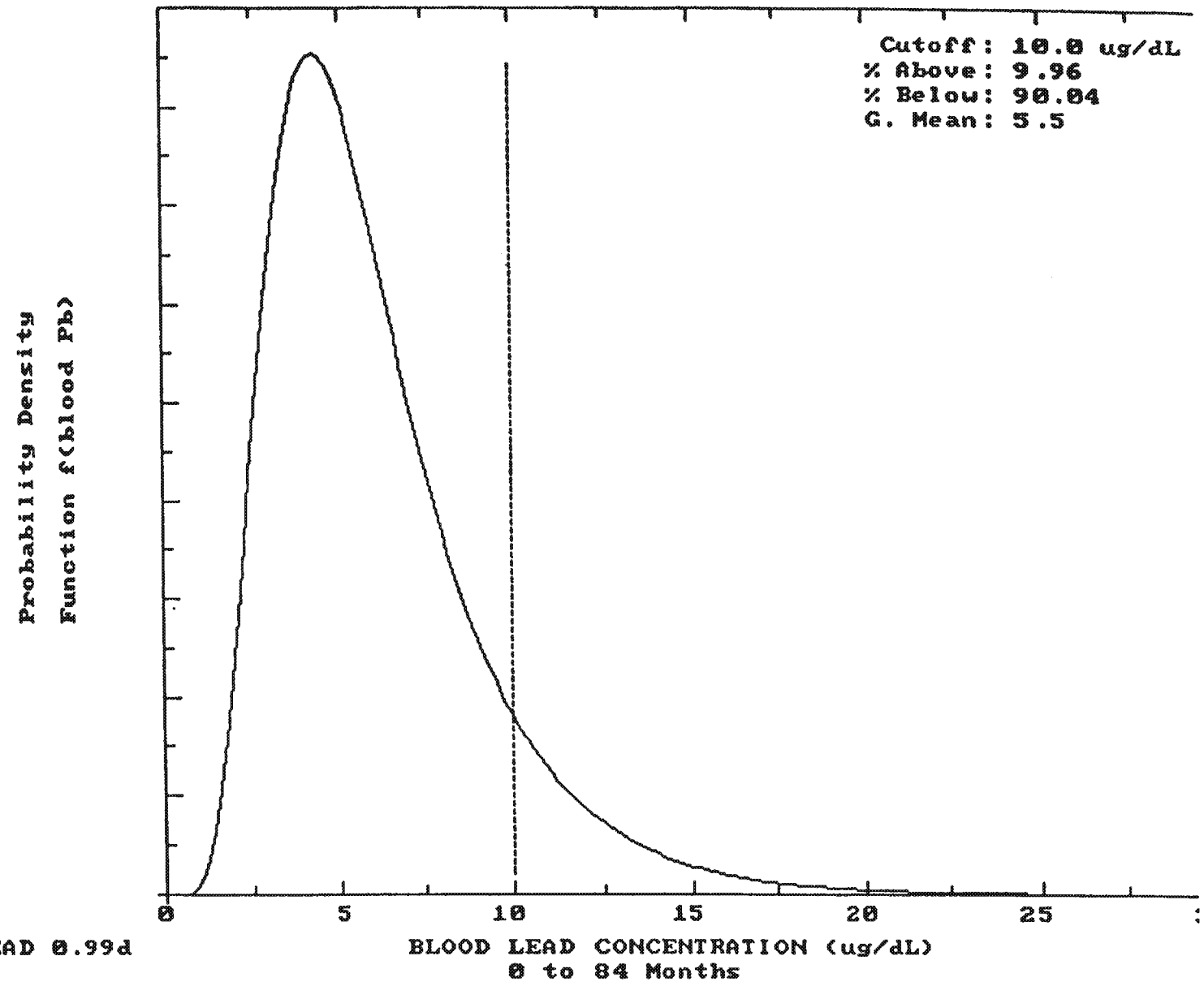
Cutoff: 10.0 ug/dL
% Above: 9.96
% Below: 90.04
G. Mean: 5.5
Probability Density
Function f(blood Pb)
0
5
10
15
20
25
BLOOD LEAD CONCENTRATION (ug/dL)
0 to 84 Months

LEAD 0.99d