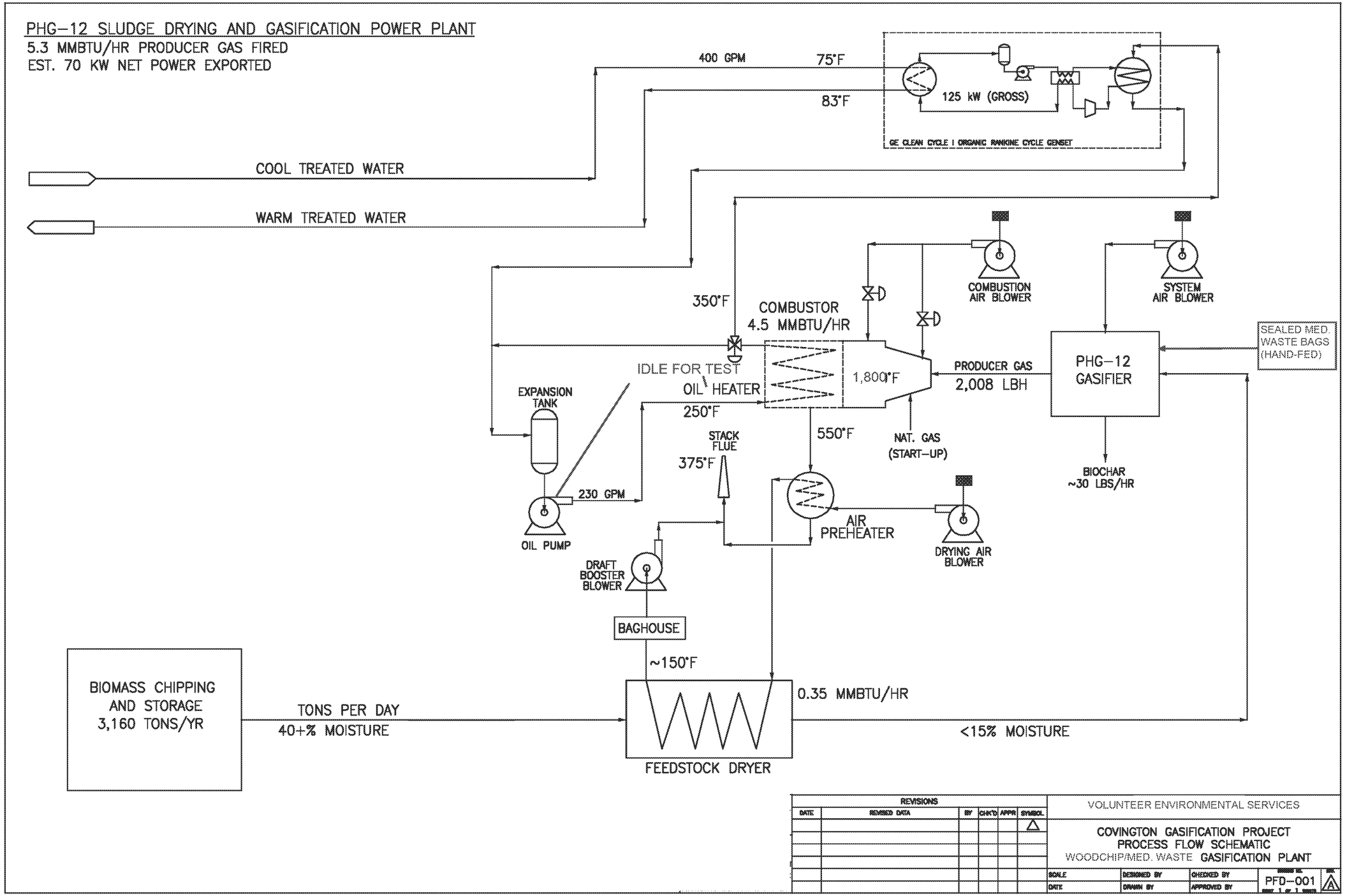
PHG–12 SLUDGE DRYING AND GASIFICATION POWER PLANT
5.3 MMBTU/HR PRODUCER GAS FIRED
EST. 70 KW NET POWER EXPORTED
400 GPM
75°F
83°F
125 kW (GROSS)
GE CLEAN CYCLE I ORGANIC RANKINE CYCLE GENSET
COOL TREATED WATER
WARM TREATED WATER
COMBUSTION AIR BLOWER
SYSTEM AIR BLOWER
350°F
COMBUSTOR
4.5 MMBTU/HR
IDLE FOR TEST
OIL HEATER
1,800°F
PRODUCER GAS
2,008 LBH
PHG–12 GASIFIER
SEALED MED. WASTE BAGS (HAND-FED)
EXPANSION TANK
250°F
550°F
STACK FLUE
375°F
NAT. GAS (START–UP)
BIOCHAR ~30 LBS/HR
230 GPM
OIL PUMP
AIR PREHEATER
DRYING AIR BLOWER
DRAFT BOOSTER BLOWER
BAGHOUSE
~150°F
BIOMASS CHIPPING AND STORAGE 3,160 TONS/YR
TONS PER DAY
40+% MOISTURE
0.35 MMBTU/HR
<15% MOISTURE
FEEDSTOCK DRYER
REVISIONS
DATE
REVISED DATA
BY
CHK'D
APPR
SYMBOL
VOLUNTEER ENVIRONMENTAL SERVICES
COVINGTON GASIFICATION PROJECT
PROCESS FLOW SCHEMATIC
WOODCHIP/MED. WASTE GASIFICATION PLANT
SCALE
DESIGNED BY
CHECKED BY
DATE
DRAWN BY
APPROVED BY
PFD–001
SHEET 1 OF 1
REV
A