PARTICULATE AND VISIBLE EMISSIONS TEST

PHG ENERGY, LLC
FOR THE CITY OF COVINGTON

BIOMASS GASIFIER

COVINGTON, TENNESSEE

APRIL 15, 2014

PHG Energy, LLC
Covington, TN 38229

Performed by:

ENVIRONMENTAL MONITORING LABORATORIES, INC.

624 Ridgewood Road
P.O. Box 655
Ridgeland, Mississippi 39158

Phone: (601)856-3092

Fax: (601)853-2151

REPORT OF
PARTICULATE AND VISIBLE EMISSIONS TEST FOR

PHG ENERGY, LLC
CITY OF COVINGTON WATER TREATMENT FACILITY
BIOMASS GASIFIER

Covington, Tennessee
April 15, 2014

PHG Energy, LLC
3048 Owen Drive
Nashville, TN 37013

Contact: Tom Stanzione
Phone: 615-471-9299

Performed By:
Environmental Monitoring Laboratories
Ridgeland, Mississippi
601/856-3092

ENVIRONMENTAL MONITORING LABORATORIES, INC.

P.O. Box 655 624 Ridgewood Road
Ridgeland, Mississippi 39158

Phone: 601/856-3092
Fax 601/853-2151

EXECUTIVE SUMMARY OF PARTICULATE AND VISIBLE EMISSIONS TEST

PHG Energy, LLC -- Biomass Gasifier – Covington, TN

Report date: May 26, 2014

On April 15, 2014, Environmental Monitoring Laboratories performed air emissions testing for PHG Energy, LLC in Covington, Tennessee. Testing was performed to measure particulate and visible emissions from PHG Energy's biomass gasifier installed at the City of Covington Waste Water Treatment Plant. This testing was done in accordance with Permit No. 966547F and 40 CFR Part 60, subpart EEEE.

Gasifier fuel is a mixture of municipal sludge and wood waste. Sludge and wood waste samples were collected during each run. An ultimate analysis and heat value determination was made for those samples and the sludge samples were analyzed for mercury content.

Particulate emissions test results:

	pounds/hr	concentration
PM EMISSIONS	0.849	0.033 grains/dscf

Opacity Determination: Visible emissions were read concurrently with the particulate samples. All readings were zero.

Mercury analysis: Average of three samples is 0.098 micrograms per gram (μg/g).

Standard Laboratories did the ultimate analysis, moisture analysis and heat value determination for both the sludge and wood waste fuel samples. Data Analysis Technologies analyzed sludge samples for mercury. Mr. Bobby Bennett representing PHG Energy, LLC coordinated the testing project. Otis Rayburn of Environmental Monitoring Laboratories was responsible for sampling.

Following is a report of the test.

REPORT OF PARTICULATE EMISSIONS TEST
FOR PHG ENERGY, LLC
CITY OF COVINGTON BIOMASS GASIFIER
COVINGTON, TENNESSEE

CONTENTS

1.0 TEST RESULTS ..... page 5
2.0 SOURCE DESCRIPTION 6
3.0 TEST PROCEDURES 6
4.0 CALCULATIONS 9
5.0 NOMENCLATURE 12
6.0 CALIBRATION 13
7.0 APPENDICES: 14
- A. Field Data 15
- B. Analyzers Data Log 24
- C. Calibration Data 32
- D. Operating Data 41
- E. Sludge Analysis for Hg (DAT) 43
- F. Fuel Ultimate Analysis (DAT) 49

LAST PAGE 62

REPORT CERTIFICATION

I certify that I have examined the information submitted herein, and based upon inquires of those responsible for obtaining the data or upon my direct acquisition of data, I believe the submitted information is true, accurate and complete.

Signed _____

Daniel G. Russell

1.0 TEST RESULTS

The following table is a summary of the measured flow parameters and test results for air emissions testing done on April 15, 2014, of the PHG biomass gasifier at the City of Covington Waste Water Treatment Plant.

Run No.		1	2	3	AVG
Date		04/15/14	04/15/14	04/15/14	-------
Time Start		0918	1115	1243	-----
Time End		1022	1218	1347	-----
PARTICULATE EMISSIONS	lb/hr	0.70	1.10	0.75	0.85
PARTICULATE EMISSIONS	gr/dscf	0.029	0.043	0.027	0.033
PARTICULATE EMISSIONS	lb/MM Btu	0.2316	0.3536	0.2334	0.2728
VISIBLE EMISSIONS	% Opacity High SMA	0.00	0.00	0.00	0.00 *
O_2	%	17.72	17.53	17.76	17.65
HEAT INPUT	MM Btu/hr	3.03	3.11	3.20	3.11
EXCESS AIR	%	561.81	521.60	568.14	550.52
VOLUMETRIC FLOW RATE	acfm	3225	3556	3809	3530
VOLUMETRIC FLOW RATE	dscfm	2815	2995	3275	3028
VELOCITY	ft./sec.	17.1	18.9	20.2	18.7
STACK TEMPERATURE	°F	110	120	119	116
MOISTURE	%	6.4	8.1	6.4	7.0
SAMPLE RATE	% isokinetic	103	100	99	100

* Highest six-minute average (SMA) reported here.

2.0 SOURCE DESCRIPTION

Source description here is limited to a description of the sample location. The gasifier thermal oxidizer exhausts to atmosphere by way of a 24.0-inch diameter vertical stack. Two sample ports at 90 degrees are provided at a location 252 inches (10.5 diameters) below the stack exit and 132 inches (5.5 diameters) above the nearest upstream disturbance. PHG personnel collected operating data and that is provided in Appendix D. PHG Energy can provide additional source description.

3.0 TEST PROCEDURES

Test procedures used are those described in the Code of Federal Regulations, Title 40, Part 60, Appendix A. All test parameters were measured simultaneously. The test consisted of triplicate 60-minute sample runs.

Sample and Velocity Traverses – EPA Method 1

Selection of sampling locations was as described in Method 1. Sample ports are installed at locations meeting requirements of the Method. Laminar airflow at sample locations was confirmed using the null Pitot technique.

Determination of Stack Gas Velocity and Volumetric Flow Rate – EPA Method 2

Stack gas velocity was measured using an S-Type Pitot tube and Method 2. Pitot tube design and its orientation with respect to the sample probe and nozzle permitted the use of a correction factor (Cp) of 0.84 as described in Method 2. Stack temperature measurements were made with a type K thermocouple and NBS calibration traceable digital thermometer.

Gas Analysis for the Determination of Dry Molecular Weight – EPA Method 3A

Oxygen content was measured by continuous monitoring with a calibrated paramagnetic analyzer as described in Method 3A.

Determination of Moisture Content in Stack Gas – EPA Method 4

Moisture content was determined from volumetric and gravimetric analysis of impinger contents of the Method 5 sample train.

Determination of Particulate Emissions – EPA Method 5

Particulate emissions were measured as described in Method 5 with no significant departures from the prescribed procedures. Method 5 incorporates the use of Methods 1 through 4. The sample train used was identical to that described in Method 5 except that the cyclone was omitted. Glass fiber filters were used. A stainless steel probe liner and nozzle was used. Reagent grade acetone was used for sample recovery.

Determination of Visible Emissions – EPA Method 9

Opacity readings were made simultaneously with and for the same duration as the particulate samples. Copies of visible emissions records and records of the VE reader's certification are in Appendix C.
***NOTE**: Though not discovered until after testing was completed, the VE reader's certification expired on April 10, 2014, – five days prior to this test. The reader re-certified on April 17, 2014 – two days after this testing was done.*

Preparation of Calibration Gases – EPA Method 205

Calibration gas concentrations were prepared using cylinders of EPA Protocol 1 gas mixtures and an Environics gas diluter verified by Method 205.

Data Acquisition

Instrument data was recorded on a Fluke Hydra data logger at 5-second intervals and reduced to 1-minute averages. The arithmetic average of each instrument's output was used to calculate emissions.

4.0 CALCULATIONS

Gasifier

PM Emissions Test -April 15,2014

Collected Test Data:			RUN 1	RUN 2	RUN 3
	Date	:	04/15/14	04/15/14	04/15/14
	Time start	:	0918	1115	1243
	Time end	:	1022	1218	1347
1.	As	: sq ft	3.1416	3.1416	3.1416
2.	Dn	: in.	0.380	0.380	0.380
3.	Cp	: dimensionless	0.84	0.84	0.84
4.	Theta	: minutes	60.00	60.00	60.00
5.	Y	: dimensionless	1.042	1.042	1.042
6.	Pbar	: in. Hg	30.14	30.14	30.16
7.	Pg	: in. H2O	-0.12	-0.12	-0.12
8.	Vm	: cf (dry gas)	40.799	42.265	46.022
9.	√(ΔP),avg	: in.H2O^.5	0.2924	0.3186	0.3427
10.	ΔH	: in. H2O	1.4160	1.5250	1.8725
11.	ts	: degrees F	110.10	120.20	119.15
12.	tm	: degrees F	60.55	64.18	66.13
13.	Vlc	: ml	63.5	84	71
14.	CO2	: percent	3.22	3.32	3.11
15.	O2	: percent	17.72	17.53	17.76
16.	F	: dscf	8480	9321	9231
17.	M,PM	: milligrams	82.2	124.3	83.9

Gasifier

PM Emissions Test -April 15,2014

Calculations:				RUN 1	RUN 2	RUN 3	AVG.
1.	Pm	:	in.Hg (ΔH/13.6)+Pbar	30.2441	30.2521	30.2977	30.2646
2.	Ps	:	in. Hg (Pg/13.6)+Pbar	30.1312	30.1312	30.1512	30.1378
3.	An	:	sq ft ((Dn/24)^2)(3.1416)	7.9E-04	7.9E-04	7.9E-04	7.9E-04
4.	Vmstd	:	dscf Vm Y(Pm/Pstd)(Tstd/Tm)	43.588	44.854	48.733	45.725
5.	Vwstd	:	scf (.04707cf/ml)(Vlc)	2.989	3.954	3.342	3.428
6.	Bws	:	dimensionless Vwstd/(Vwstd+Vmstd)	0.0642	0.0810	0.0642	0.0698
7.	Md	:	mol.wt. dry basis .44 CO2+.32 O2+.28(CO+N2)	29.22	29.23	29.21	29.22
8.	Ms	:	mol.wt. wet basis Md(1-Bws)+18 Bws	28.50	28.32	28.49	28.44
9.	Vs	:	ft/sec Kp Cp (√ΔP)√(Ts/(Ps Ms))	17.11	18.87	20.21	18.73
10.	Q	:	cfm Vs As(60 sec/min)	3225	3556	3809	3530
11.	Qstw	:	scfm Q(Ps/Pstd)(Tstd/Ts)	3008	3259	3499	3255
12.	Qstd	:	dscfm Qstw(1-Bws)	2815	2995	3275	3028
13.	Xsair	:	percent 100[(O2-.5CO)/(.264 N2-(O2-.5CO))]	561.81	521.60	568.14	550.52
14.	HeatInput	:	MM Btu/hr 60 Qstd/(F 20.9/(20.9 - O2))	3.03	3.11	3.20	3.11
15.	I	:	percent [(100 Ts)(.002669 Vlc+(Vm Pm/Tm)]/(60 theta Vs Ps An)	102.96	99.57	98.94	100.49

Particulate Emissions

16.	E,PM	:	pounds/hr (M,PM/Vmstd)(Qstd)(60)/(453590)	0.702	1.098	0.746	0.849
17.	C,PM	:	grains/dscf (M,PM/Vmstd)(.0154 grains/mg)	0.0290	0.0427	0.0265	0.0327
18.	E'PM	:	pounds/MM Btu E,PM/HeatInput	0.2316	0.3536	0.2334	0.2728

Determination of F-Factor

Wood Fuel Sample						
	R1	R2	R3	AVG		
Moisture	42.69	44.36	44.03	43.69	%	
Carbon	49.60	49.11	49.06	49.26	%	dry basis
Hydrogen	5.85	5.77	5.80	5.81	%	dry basis
Nitrogen	0.62	0.97	0.94	0.84	%	dry basis
Sulfur	0.07	0.11	0.12	0.10	%	dry basis
Ash	3.82	5.59	5.15	4.85	%	dry basis
Oxygen	40.04	38.45	38.93	39.14	%	dry basis
GCV	9367	8457	8532	8785	Btu/lb.	(heat value dry basis)
$F = 10^6 * [3.64(\%H)+1.53(\%C)+.57(\%S)+0.14(\%N)-0.46(\%O)]/GCV$						
F =	8422	9300	9197			

Sludge Fuel Sample						
	R1	R2	R3	AVG		
Moisture	82.89	82.05	82.66	82.53	%	
Carbon	39.53	39.70	39.69	39.64	%	dry basis
Hydrogen	5.20	5.18	5.12	5.17	%	dry basis
Nitrogen	6.88	6.96	6.83	6.89	%	dry basis
Sulfur	1.18	1.17	1.17	1.17	%	dry basis
Ash	29.95	30.23	29.90	30.03	%	dry basis
Oxygen	17.26	16.76	17.29	17.10	%	dry basis
GCV	7399	7351	7324	7358	Btu/lb.	(heat value dry basis)
$F = 10^6 * [3.64(\%H)+1.53(\%C)+.57(\%S)+0.14(\%N)-0.46(\%O)]/GCV$						
F =	9880	10002	9972			

Calculate F	R1	R2	R3	AVG
Wood lb/hr wet	794	792	792	793
Wood lb/hr dry	455.0	440.7	443.3	446.5
Sludge lb/hr wet	138	86	136	137
Sludge lb/hr dry	23.6	15.4	23.6	23.9
Fraction of Btu from wood	0.961	0.970	0.956	0.957
% of Btu from sludge	0.039	0.030	0.044	0.043
dry basis F-Factor	8480	9321	9231	9010

DRIFT AND BIAS CALCULATIONS:

Analyte, units	Level	Cal. Value	Pre-Test				Run No. 1			Run No. 2			Run No. 3		
			Cal. Reading	% Cal. Error	Bias Reading	% Bias	Reading	% Bias	% Drift	Reading	% Bias	% Drift	Reading	% Bias	% Drift
% CO2	Low	0.0	0.0	0.0	0.0	0.0	0.0	0.0	0.0	0.0	0.0	0.0	0.0	0.0	0.0
	Mid	8	8	0.0	7.9	0.6	7.8	1.3	0.6	7.8	1.3	0.0	7.8	1.3	0.0
	High	16.0	16	0.0											
	SPAN =	16.0	Measured Result				3.16			3.24			3.04		
			Corrected Result				**3.22**			**3.32**			**3.11**		
% O2	Low	0.0	0.0	0.0	0.1	0.5	0.1	0.5	0.0	0.1	0.5	0.0	0.1	0.5	0.0
	Mid	10.5	10.5	0.0	10.5	0.0	10.5	0.0	0.0	10.5	0.0	0.0	10.5	0.0	0.0
	High	20.9	21.0	0.5											
	SPAN =	20.9	Measured Result				17.65			17.47			17.69		
			Corrected Result				**17.72**			**17.53**			**17.76**		

Calibration Error Allowable	< 2% of span	[((Cyl. Value - Reading) / span)* 100%]
System Bias	< 5% span	[(System Cal - Reading)/span*100%]
Drift	< 3% .....(Method 20 = 2 %).....	[(Initial System Cal. - Final System Cal.) / Span * 100%]

5.0 NOMENCLATURE

SYMBOL	UNITS	DESCRIPTION
An	ft^2	Nozzle cross sectional area
As	ft^2	Stack cross sectional area
Bws	dimensionless	Wet gas fraction
CO_2	percent	Carbon dioxide content by volume
CO	percent	Carbon monoxide content by volume
Cp	dimensionless	Pitot correction factor
C,X	as labeled	Concentration of pollutant X
DGF	dimensionless	Dry gas fraction
Dn	inches	Nozzle diameter
ΔH (delta H)	in. H_2O	Pressure drop across meter orifice
ΔP (delta P)	in. H_2O	Stack gas velocity pressure
E,X	lb/hr	Emission rate of pollutant X
E'X	lb/MM Btu	Emission rate of pollutant X
F	dscf	Volume of flue gas per MM Btu
I	percent	Nozzle velocity/stack gas velocity
Kp	consistent	Pitot tube constant
M,X	milligrams	Sample weight of pollutant X
Md	lb/lb mole	Dry molecular weight of stack gas
Ms	lb/lb mole	Wet molecular weight of stack gas
N2	percent	Nitrogen content by volume, dry basis
O_2	percent	Oxygen content by volume, dry basis
Pbar	in. Hg	Barometric pressure
Pg	in. Hg	Stack static pressure
Pm	in. Hg	Total pressure at meter (Pbar+(ΔH/13.6)
Ps	in. Hg	Total stack pressure (Pbar+(Pg/13.6))
Pstd	in. Hg	Standard barometric pressure = 29.92
Q	acfm	Volumetric flow rate at stack conditions
Qstd	dscfm	Volumetric flow rate at standard conditions, dry basis
Qstdw	scfm	Volumetric flow rate at standard conditions, wet basis
θ (theta)	minutes	Sample duration
tm	°F	Meter temperature (Tm denotes °R)
ts	°F	Stack temperature (Ts denotes °R)
Tstd	°R	Standard temperature = 528°R
Vlc	ml	volume of water collected
Vm	ft^3	Volume of dry gas sampled through meter
Vmstd	dscf	Sample volume at standard conditions
Vwstd	scf	Sample volume of water vapor
Y	dimensionless	Meter coefficient
Xsair	percent	Excess air

6.0 CALIBRATIONS

Measurement devices used by Environmental Monitoring Laboratories and subject to changes in measurement precision are initially calibrated prior to use. Those instruments for which calibration factors are subject to change or for which calibration checks are required are calibrated following each field use or as otherwise directed and noted. Calibration procedures for specific equipment are as follows.

Dry Gas Meter:

Dry gas meters are periodically removed from the sampling consoles and cleaned and repaired (new gaskets etc. as required). Following the overhaul of a meter, the measuring precision is checked by the Bell Prover Method and adjusted when necessary to read to within 2% of 100% accuracy. This service is provided by Big Three Meter Company in Jackson, Mississippi. Overhaul service is followed by a five point calibration described in APTD-0576 using either a wet test meter, calibrated dry gas meter (used exclusively for calibrations), or a calibrated orifice set as a standard reference. Following field use, gas meter calibration is checked by performing three calibration checks at intermediate orifice settings. If a meter coefficient obtained from pre-test and post-test checks differs by more than 5%, the coefficient (Y) giving the lower sample volume is used in the calculations.

Orifice:

The orifice coefficient is initially determined and is rechecked following a major gas meter repair and calibration. The calibration is included with the Dry Gas Meter Calibration.

Nozzles:

Nozzles are checked before each field use with a precision (.001 in.) dial caliper. Three measurements on different axes are made; an average of those three readings is used in calculations. If the tolerance among measurements exceeds 0.004 inches (highest to lowest reading) the nozzle is repaired and recalibrated or discarded.

Pitot Tubes:

Pitot tubes meeting EPA geometry standards are assigned a coefficient of 0.84. Pitot tubes are visually inspected for damage before, during and after use. Those pitot tubes not meeting the geometry standards are assigned a coefficient from the manufacturer's calibration that it retains unless damaged.

Temperature Measuring Instruments:

All temperature measurements are made with type K thermocouples and digital thermocouple thermometers, which have an initial calibration traceable to NBS. Thermocouples are checked during a test series against an ASTM mercury in glass thermometer at ambient temperature. Continuity and proper thermocouple contact location are checked by challenging the thermocouple with a temperature change. (EMTIC GD-028 -- June 21, 1994)

Barometer:

Aneroid field barometers are checked against and adjusted to readings from a mercury barometer or readings obtained from local weather authorities.

Differential Pressure Gauges:

Velocity head (delta P) and orifice pressure differential (delta H) measurements are made using water manometers of the appropriate range unless otherwise noted in the test data. Manometers do not require calibration.

Analytical Balance:

The analytical balance used was initially calibrated by the manufacturer. Additionally, the balance is equipped with an automatic zero and calibration feature that is used daily or prior to each use. Prior to each use, or daily, a quality control check is made using Class A weights of 0.5000 grams and 100.0000 grams.

ED_006088_00000329-00013

7.0 APPENDICES

Appendix A. Sampling Data

Appendix B. Data Log

Appendix C. Calibration Data

Appendix D. Operating Data (PHG)

Appendix E. Sludge analysis for Hg (DAT)

Appendix F. Fuel ultimate analysis (DAT)

APPENDIX A

SAMPLING DATA

STACK CONFIGURATION AND SAMPLE POINT LAYOUT (EML V-0 Effective 093013)

PLANT:	PHG	Covington TN	Date:
SOURCE:	Gasifier		
TEST FOR:	PM		
TEST OPERATORS:			

SKETCH OF STACK

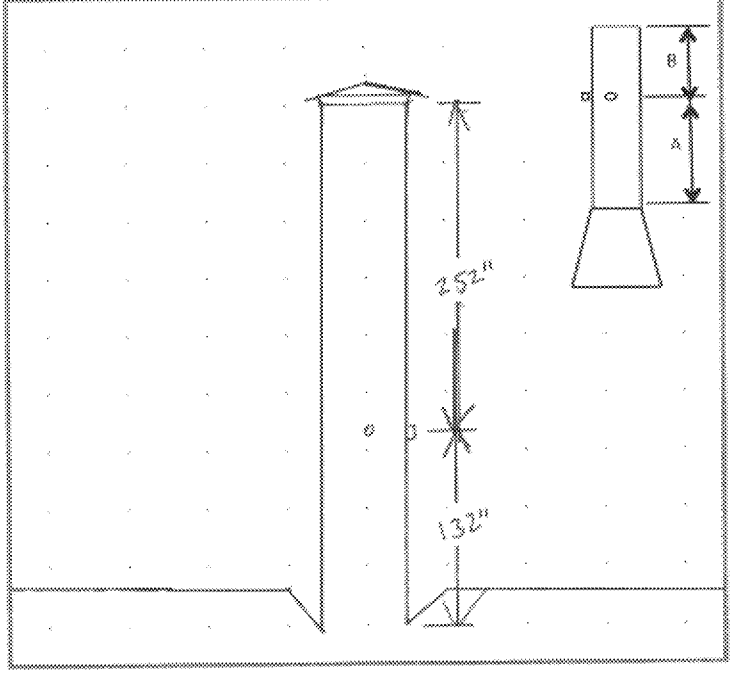

PERCENT OF DIAMETER (for circular stacks)

point no.	points on a diameter: 2	4	6	8	10	12	14	16
1	14.6	6.7	4.4	3.2	2.6	2.1	1.8	1.6
2	85.4	25.0	14.6	10.5	8.2	6.7	5.7	4.9
3		75.0	29.6	19.4	14.6	11.8	9.9	8.5
4		93.3	70.4	32.3	22.6	17.7	14.6	12.5
5			85.4	67.7	34.2	25.0	20.1	16.9
6			95.6	89.5	65.8	35.6	26.9	22.0
7				89.5	77.4	64.4	36.6	28.3
8				96.8	85.4	75.0	63.4	37.5
9					91.8	82.3	73.1	62.5
10					97.4	88.2	79.9	71.7
11						93.3	85.4	78.0
12						97.9	90.1	83.1
13							94.3	87.5
14							98.2	91.5
15								95.1
16								98.4

STACK DIAMETER:	24"
Distance from ports to disturbance:	
A. to upstream disturbance	132"
B. to downstream disturbance	252"
Upstream diameters:	5.5
Downstream diameters:	10.5
Minimum No. sample points required:	20
No. sample points selected:	10x2
Port Length:	4"
Port Type:	4 flange
Port Access:	Stairs lift/board

Point No.	inches from wall	velocity head
1	0.6	
2	2.0	
3	3.5	
4	5.4	
5	~~8.2~~ 8.2	
6	15.8	
7	18.6	
8	20.5	
9	22.0	
10	23.4	

MINIMUM NO. OF POINTS ON A DIAMETER

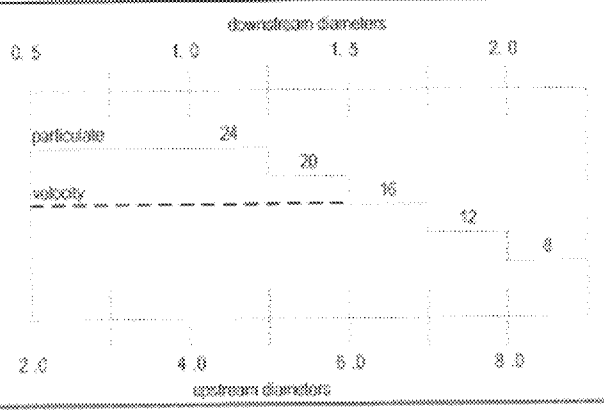

Pitot ID: Pitot Cp: Stack Temp:

Remarks:

Plant: PHG Covington, TN
Source: Cyclone
Test For: PM/VE
Test Operators: Raybon / Bentley / Shelnutt

RUN NO. 1
Date 04/17/14
Time start 0918 end 1022

Meter Box: NT24 = 1.042
Sample Box: No 1
Probe/Pitot: 3' Taj
Pitot Cp: .840
Nozzle Dia.: .385
Filter No.: 594

No. Sample Pts.: 12 x 2
Minutes/Pt.: 2.3

K FACTOR SETUP
ΔH@: 1.50
Meter Temp: 65
%H2O: 4
Stack Temp.: 125
K Factor: 16.43

GAS ANALYSIS: CEM

CO_2			
O_2			
CO			
Time			

CONDENSATE: init. 200 final 256
SILICA GEL: init. 895 final 902.5

Amb. Temp. °F: 44
Bar. Press. "Hg: 30.14
Static Press. "H2O: -.12

Notes:
Nozzle
0.380
0.385
0.390
Sample value 392

Alex Pratt
Garrett Ramons

Port Point	Elapsed Time Min/sec	DGM Reading FT³	Velocity Head ΔP in. H2O	Orifice ΔH in. H2O	Stack Temp °F	Meter Temp °F in	Meter Temp °F out	Oven Temp °F	Imp. Temp °F	Vac in Hg
1	00	251.918	0.090	1.50	119	60	58	238	46	4
2	3	253.9	0.090	1.50	115	60	58	235	44	4
3	6	256.1	0.085	1.40	112	60	58	235	43	4
4	9	258.0	0.090	1.50	107	61	58	251	43	4
5	12	260.1	0.090	1.50	106	61	58	256	43	4
6	15	262.2	0.085	1.40	106	61	58	256	44	4
7	18	264.5	0.10	1.65	107	61	58	259	45	4
8	21	266.5	0.10	1.65	107	62	58	259	45	4
9	24	268.4	0.10	1.65	108	62	58	259	46	4
10	27	270.6	0.070	1.15	108	62	58	258	47	4
1	30/00	272.722	0.10	1.65	110	63	59	255	47	4
2	3	275.1	0.10	1.65	110	63	59	257	48	4
3	6	277.1	0.10	1.65	110	63	59	258	48	4
4	9	279.9	0.080	1.30	110	64	59	255	50	4
5	12	281.3	0.080	1.30	111	64	59	255	50	4
6	15	283.4	0.080	1.30	109	64	60	258	50	4
7	18	285.1	0.080	1.30	108	64	60	258	50	4
8	21	287.1	0.080	1.30	113	64	60	259	51	4
9	24	289.0	0.070	1.15	112	64	60	258	51	4
10	27	291.3	0.050	0.82	114	64	60	251	51	4
End	60:00	292.717								
		40.799	0.3924	12.160	110.10	60.55				

COMPLETED MCR 4-15-14

Leak Checks: Sample Train: .075 .085 .010 cfm @ 9 "Hg
Pitot Tubes: High ✓ @ 5.2 "H2O || Low ✓ @ 5.1 "H2O

Process: Sample Train ✓ Pitot Tubes ✓

ENVIRONMENTAL MONITORING LABORATORIES, INC. - RIDGELAND, MISSISSIPPI - 601-856-

Plant: PHG Covington, TN
Source: Coaster
Test For: PM/VE
Test Operators: Ralph / Ron Cox / Stebbett

RUN NO. 2
Date 07/15/14
Time start 1115 end 1218

Meter Box: Y2 = 1.042
Sample Box: #2
Probe/Pitot: 3'
Pitot Cp: .84
Nozzle Dia.: .380
Filter No.: 409

No. Sample Pts.: 108
Minutes/Pt.: 3.0

K FACTOR SETUP
ΔH@: 1.50
Meter Temp: 65
%H_2O: 6
Stack Temp.: 160
K Factor: 16.16

GAS ANALYSIS: Gas

CO_2			
O_2			
CO			
Time			

CONDENSATE: init. 200 final 274
SILICA GEL: init. 801 final 811

Notes: w/cond 418

Amb. Temp. °F: 47
Bar. Press. "Hg: 30.14
Static Press. "H_2O: -.12

Port Point	Elapsed Time Min/sec	DGM Reading Ft.³	Velocity HeadΔP in. H_2O	Orifice ΔH in. H_2O	Stack Temp °F	Meter Temp °F in	Meter Temp °F out	Oven Temp °F	Imp. Temp °F	VAC in Hg
1	000	296.495	0.11	1.65	152	65	62	251	49	2
2	3	298.4	0.11	1.65	147	66	62	253	48	3
3	6	301.0	0.10	1.50	137	66	62	251	50	5
4	9	303.1	0.10	1.50	134	66	62	254	50	3
5	12	305.0	0.10	1.50	140	65	62	254	51	5
6	15	307.0	0.10	1.50	145	65	62	251	52	3
7	18	309.1	0.10	1.50	112	65	62	254	53	3
8	21	311.2	0.10	1.50	111	65	62	251	54	3
9	24	313.2	0.10	1.50	111	66	62	251	54	3
10	27	315.4	0.080	1.20	110	66	62	254	54	3
1	30/00	317.286	0.080	1.20	110	66	62	250	52	3
2	3	319.4	0.095	1.40	110	66	62	254	50	4
3	6	321.4	0.10	1.50	116	66	63	251	50	4
4	9	323.5	0.10	1.50	115	66	63	259	51	4
5	12	326.1	0.10	1.50	119	66	63	251	51	4
6	15	327.5	0.10	1.50	117	66	63	251	52	4
7	18	329.9	0.12	1.80	117	67	63	254	52	4
8	21	332.1	0.12	1.80	120	67	63	254	52	4
9	24	334.4	0.11	1.65	116	67	63	258	52	4
10	27	336.4	0.11	1.65	115	67	63	254	52	4
60	60/00	338.760								
		42.265	0.3186	1.5250	120.20	64.18				

COMPLETED MCR 7-15-14

Leak Checks: Sample Train: .040 → .020 = .010 cfm @ 9 "Hg
Pitot Tubes: High ☑ @ 5.5 "H_2O || Low ☑ @ 5.6 "H_2O
Pretest: Sample Train ☑ Pitot Tubes ☑

ENVIRONMENTAL MONITORING LABORATORIES, INC. - RIDGELAND, MISSISSIPPI -- 601-856-8899

Plant: PPG Covington, TN
Source: Carbitex
Test For: PM/VOC
Test Operators: Bingham / Pentland / Shelnutt

RUN NO. 3
Date 04/15/14
Time start 1243 end 1247

Meter Box	1122.1042	No. Sample Pts.	10x2
Sample Box	No 1	Minutes/Pt.	3.0
Probe/Pilot	2'		
Pitot Cp	.84	K FACTOR SETUP	
Nozzle Dia.	.380	ΔH@	1.50
Filter No.	410	Meter Temp	45
		%H_2O	6
Amb. Temp. °F	49	Stack Temp.	125
Bar. Press. "Hg	30.16	K Factor	15.75
Static Press. "H_2O	-.12		

GAS ANALYSIS: CEM

CO_2			
O_2			
CO			
Time			

CONDENSATE: init. 200 final 261
SILICA GEL: init. 902.5 final 912

Notes:

Port Point	Elapsed Time Min/sec	DGM Reading Ft³	Velocity HeadΔP in. H_2O	Orifice ΔH in. H_2O	Stack Temp °F	Meter Temp °F in	Meter Temp °F out	Oven Temp °F	Imp. Temp °F	Vac in Hg
1	0:00	379.1 13	0.14	2.20	135	66	62	251	56	3
2	3	341.8	0.15	2.35	136	66	63	252	51	3
3	6	344.0	0.15	2.35	132	66	63	254	50	3
4	9	346.5	0.15	2.35	130	66	63	251	51	3
5	12	349.2	0.15	2.35	123	67	63	253	53	3
6	15	351.9	0.15	2.35	117	67	63	257	54	3
7	18	354.1	0.15	2.35	116	68	63	254	54	3
8	21	356.9	0.10	1.60	115	68	63	256	55	3
9	24	358.9	0.11	1.75	112	69	64	254	54	3
10	27	361.0	0.11	1.75	112	69	64	250	51	3
11										
12	30/00	363.431	0.10	1.60	112	69	64	251	51	3
13	3	365.6	0.11	1.75	117	69	64	246	51	3
14	6	367.2	0.10	1.60	119	69	65	254	52	4
15	9	369.4	0.11	1.75	117	69	65	258	52	4
16	12	371.6	0.11	1.75	116	69	65	251	53	4
17	15	374.2	0.10	1.60	117	69	65	251	54	4
18	18	376.4	0.10	1.60	119	69	65	251	55	4
19	21	378.4	0.10	1.60	114	69	65	250	55	4
20	24	381.2	0.09	1.40	115	70	66	250	56	4
21	27	382.7	0.09	1.40	115	70	66	249	56	4
22	End 60/00	385.1 35								
23										
24										
25										
26										
27										
28										
29										
30										
31										
32		46.022	0.3427	1.8725	119.15	66.13				
33										

COMPLETED MCL 4/15/14

Leak Checks: Sample Train: .085 → .000 = .015 cfm @ 6 "Hg
Pilot Tubes: High ☑ @ 5.1 "H_2O || Low ☑ @ 6.0 "H_2O

Pretest: Sample Train ☑ Pitot Tubes ☑

PARTICULATE CATCH ANALYSIS (EML V-0 Effective 093013)

SAMPLES: PHG

DATE TAKEN: 4-15-14 DATE ANALYZED: 4-16-14

DELIVERED BY: OR RECEIVED BY: BN

ANALYZED BY: BN

(Attach chain of custody if additional exchanges occur)

FILTERS:

RUN NO.	1	2	3	
FILTER NO.	594	409	410	
FILTER TARE, gms.	.4172	.4054	.4042	
041614 1227	0.4525	0.4449	0.4477	
042314 0958	0.4528	0.4445	0.4476	
FINAL WEIGHT, gms.	0.4528	0.4445	0.4476	
NET GAIN, gms.	.0356	.0391	.0434	

PROBE WASH:

RUN NO.	1	2	3	Blank
CONTAINER I.D.	PHG R1	PHG R2	PHG R3	Blank Lot#365812
VOLUME INTACT?	Y	Y	Y	Y
VOLUME, ml	150	150	175	200
	(202)	(314)	(420)	(603)
TARE WEIGHT, gms.	101.5841	114.1238	104.3448	104.3093
042314 1000	101.6312	114.2087	104.3853	104.3096
042614 0815	101.6308	114.2091	104.3854	104.3094
FINAL WEIGHT, gms	101.6308	114.2091	104.3854	104.3094
NET GAIN, gms.	.0467	.0853	.0406	.0001
LESS BLANK, gms.	.0001	.0001	.0001	

PARTICULATE SAMPLE WEIGHT:

RUN NO.	1	2	3	
filter + probe, mg.	82.2	124.3	83.9	

COMPLETED MCC 4-28-14

VISIBLE EMISSIONS EVALUATION RECORD

R1

PLANT PH 6 Covington TN

Emission Point Gasifier

Date 4/15/14

Stack height 40'

Distance to source 150'

Direction from source E

CONDITIONS	START	STOP
Time	9:18	10:18
Wind direction	N	N
Wind speed	15-20	15-20
Ambient temp. °F	44	44
Sky cover	Clear	Clear
Plume color	N/A	N/A
Plume background	Sky	Sky

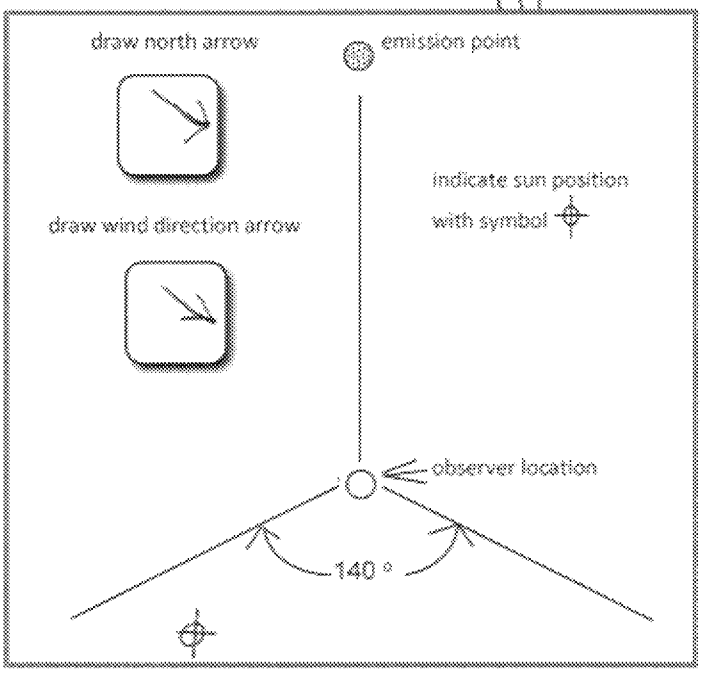

Condensing water vapor? Yes Detached ☐ Attached ☑ Distance visible 10'

min	seconds 0	15	30	45
0	0	0	0	0
1	0	0	0	0
2	0	0	0	0
3	0	0	0	0
4	0	0	0	0
5	0	0	0	0
6	0	0	0	0
7	0	0	0	0
8	0	0	0	0
9	0	0	0	0
10	0	0	0	0
11	0	0	0	0
12	0	0	0	0
13	0	0	0	0
14	0	0	0	0

min	seconds 0	15	30	45
15	0	0	0	0
16	0	0	0	0
17	0	0	0	0
18	0	0	0	0
19	0	0	0	0
20	0	0	0	0
21	0	0	0	0
22	0	0	0	0
23	0	0	0	0
24	0	0	0	0
25	0	0	0	0
26	0	0	0	0
27	0	0	0	0
28	0	0	0	0
29	0	0	0	0

min	seconds 0	15	30	45
30	0	0	0	0
31	0	0	0	0
32	0	0	0	0
33	0	0	0	0
34	0	0	0	0
35	0	0	0	0
36	0	0	0	0
37	0	0	0	0
38	0	0	0	0
39	0	0	0	0
40	0	0	0	0
41	0	0	0	0
42	0	0	0	0
43	0	0	0	0
44	0	0	0	0

min	seconds 0	15	30	45
45	0	0	0	0
46	0	0	0	0
47	0	0	0	0
48	0	0	0	0
49	0	0	0	0
50	0	0	0	0
51	0	0	0	0
52	0	0	0	0
53	0	0	0	0
54	0	0	0	0
55	0	0	0	0
56	0	0	0	0
57	0	0	0	0
58	0	0	0	0
59	0	0	0	0

Remarks:

Avg. opacity for period: Highest six minute average:

Other data reduction:

Observer: Ben Frow date certified: 10/18/13 Signature: Eric Renfrow

ENVIRONMENTAL MONITORING LABORATORIES - RIDGELAND, MISSISSIPPI - 601/856-3092

VISIBLE EMISSIONS EVALUATION RECORD

R2

PLANT PHG

Emission Point Gasifier

Date 4/15/14

Stack height 40'

Distance to source 150'

Direction from source E

CONDITIONS	START	STOP
Time	11:15	12:15
Wind direction	N	N
Wind speed	20	20
Ambient temp. °F	46	46
Sky cover	Clear	Clear
Plume color	N/A	N/A
Plume background	BL SKY	SKY

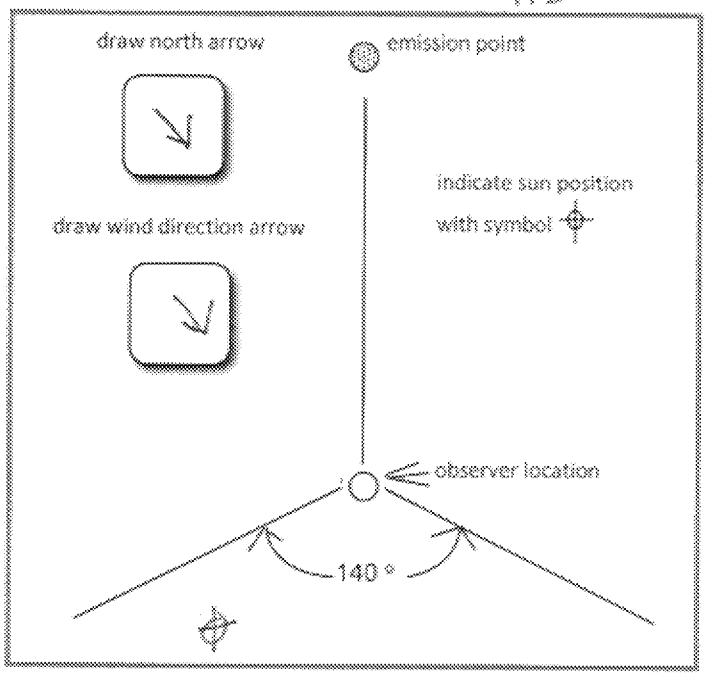

Condensing water vapor? Yes Detached ☐ Attached ☑ Distance visible 20'

min	0	15	30	45
0	0	0	0	0
1	0	0	0	0
2	0	0	0	0
3	0	0	0	0
4	0	0	0	0
5	0	0	0	0
6	0	0	0	0
7	0	0	0	0
8	0	0	0	0
9	0	0	0	0
10	0	0	0	0
11	0	0	0	0
12	0	0	0	0
13	0	0	0	0
14	0	0	0	0

min	0	15	30	45
15	0	0	0	0
16	0	0	0	0
17	0	0	0	0
18	0	0	0	0
19	0	0	0	0
20	0	0	0	0
21	0	0	0	0
22	0	0	0	0
23	0	0	0	0
24	0	0	0	0
25	0	0	0	0
26	0	0	0	0
27	0	0	0	0
28	0	0	0	0
29	0	0	0	0

min	0	15	30	45
30	0	0	0	0
31	0	0	0	0
32	0	0	0	0
33	0	0	0	0
34	0	0	0	0
35	0	0	0	0
36	0	0	0	0
37	0	0	0	0
38	0	0	0	0
39	0	0	0	0
40	0	0	0	0
41	0	0	0	0
42	0	0	0	0
43	0	0	0	0
44	0	0	0	0

min	0	15	30	45
45	0	0	0	0
46	0	0	0	0
47	0	0	0	0
48	0	0	0	0
49	0	0	0	0
50	0	0	0	0
51	0	0	0	0
52	0	0	0	0
53	0	0	0	0
54	0	0	0	0
55	0	0	0	0
56	0	0	0	0
57	0	0	0	0
58	0	0	0	0
59	0	0	0	0

Remarks:

Avg. opacity for period: Highest six minute average:

Other data reduction:

Observer: Renfrow date certified: 10/18/14 Signature: [illegible]

ENVIRONMENTAL MONITORING LABORATORIES - RIDGELAND, MISSISSIPPI - 601/856-3092

VISIBLE EMISSIONS EVALUATION RECORD

R3

PLANT PHG

Emission Point Gasifier

Date 4/15/14

Stack height 40'

Distance to source 150'

Direction from source E

CONDITIONS	START	STOP
Time	1243	143
Wind direction	N	N
Wind speed	20	20
Ambient temp. °F	42	45
Sky cover	clear	clear
Plume color	N/A	N/A
Plume background	Sky	Sky

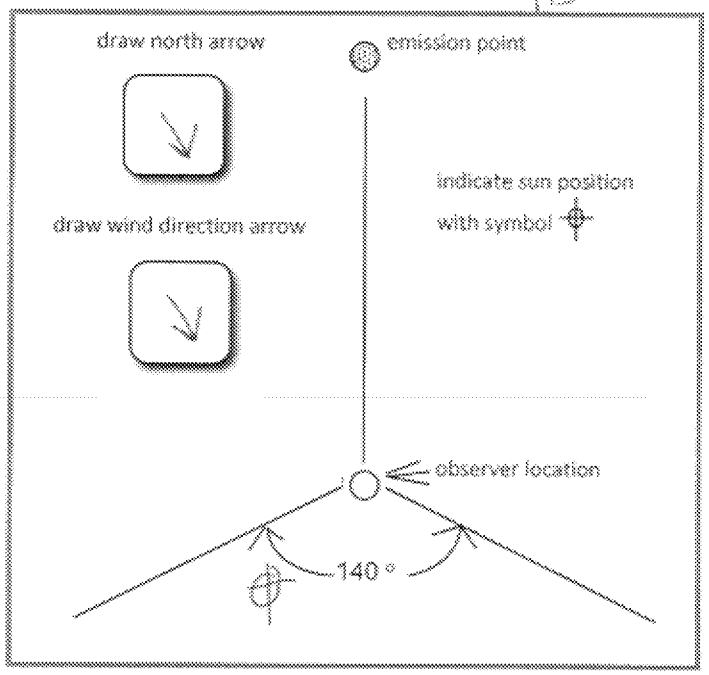

Condensing water vapor? Yes Detached ☐ Attached ☑ Distance visible 20'

min	seconds 0	15	30	45
0	0	0	0	0
1	0	0	0	0
2	0	0	0	0
3	0	0	0	0
4	0	0	0	0
5	0	0	0	0
6	0	0	0	0
7	0	0	0	0
8	0	0	0	0
9	0	0	0	0
10	0	0	0	0
11	0	0	0	0
12	0	0	0	0
13	0	0	0	0
14	0	0	0	0

min	seconds 0	15	30	45
15	0	0	0	0
16	0	0	0	0
17	0	0	0	0
18	0	0	0	0
19	0	0	0	0
20	0	0	0	0
21	0	0	0	0
22	0	0	0	0
23	0	0	0	0
24	0	0	0	0
25	0	0	0	0
26	0	0	0	0
27	0	0	0	0
28	0	0	0	0
29	0	0	0	0

min	seconds 0	15	30	45
30	0	0	0	0
31	0	0	0	0
32	0	0	0	0
33	0	0	0	0
34	0	0	0	0
35	0	0	0	0
36	0	0	0	0
37	0	0	0	0
38	0	0	0	0
39	0	0	0	0
40	0	0	0	0
41	0	0	0	0
42	0	0	0	0
43	0	0	0	0
44	0	0	0	0

min	seconds 0	15	30	45
45	0	0	0	0
46	0	0	0	0
47	0	0	0	0
48	0	0	0	0
49	0	0	0	0
50	0	0	0	0
51	0	0	0	0
52	0	0	0	0
53	0	0	0	0
54	0	0	0	0
55	0	0	0	0
56	0	0	0	0
57	0	0	0	0
58	0	0	0	0
59	0	0	0	0

Remarks:

Avg. opacity for period: Highest six minute average:

Other data reduction:

Observer: Renfrow date certified: 10/18/13 Signature: [illegible] Renfrow

APPENDIX B

DATA LOG

	% CO2	% O2
04/14/14 14:36	0.1	20.8
04/14/14 14:37	0.1	20.8
04/14/14 14:38	0.1	20.8
04/14/14 14:39	0.1	20.7
04/14/14 14:40	0.1	20.8
04/14/14 14:41	0.1	20.9
04/14/14 14:42	0.0	5.5
04/14/14 14:43	0.0	9.9
04/14/14 14:44	0.0	7.9
04/14/14 14:45	0.0	5.1
04/14/14 14:46	0.0	10.3
04/14/14 14:47	0.0	7.8
04/14/14 14:48	0.0	5.1
04/14/14 14:49	0.0	10.2
04/14/14 14:50	0.0	7.8
04/14/14 14:51	0.0	5.3
04/14/14 14:52	0.0	10.5
04/14/14 14:53	0.0	15.8
04/14/14 14:54	0.0	11.8
04/14/14 14:55	0.0	14.0
04/14/14 14:56	0.0	13.5
04/14/14 14:57	0.0	13.6
04/14/14 14:58	0.1	20.9
04/14/14 14:59	0.1	20.9
04/14/14 15:00	0.1	20.9
04/14/14 15:01	0.1	20.9
04/14/14 15:02	0.1	20.9
04/14/14 15:03	0.1	20.9
04/14/14 15:04	0.1	20.9
04/14/14 15:05	0.0	16.4
04/14/14 15:06	0.0	7.2
04/14/14 15:07	0.0	12.8
04/14/14 15:08	0.0	8.1
04/14/14 15:09	0.0	8.1
04/14/14 15:10	0.0	8.1
04/14/14 15:11	0.0	11.2
04/14/14 15:12	0.0	14.7
04/14/14 15:13	0.1	19.4
04/14/14 15:14	0.7	20.4
04/14/14 15:15	0.9	20.3
04/14/14 15:16	0.8	20.4
04/14/14 15:17	0.5	20.8
04/14/14 15:18	0.6	20.7
04/14/14 15:19	0.9	20.3
04/14/14 15:20	0.1	17.2
04/14/14 15:21	0.0	0.0
04/14/14 15:22	0.0	0.0
04/14/14 15:23	0.0	0.0
04/14/14 15:24	0.1	18.8
04/14/14 15:25	0.1	21.0
04/14/14 15:26	0.1	21.0
04/14/14 15:27	0.1	21.0
	% CO2	% O2
04/15/14 7:04	No Data	No Data
04/15/14 7:05	0.1	14.3
04/15/14 7:06	0.0	0.0
04/15/14 7:07	0.0	0.0
04/15/14 7:08	0.0	0.0
04/15/14 7:09	0.0	0.0
04/15/14 7:10	0.0	7.2
04/15/14 7:11	0.0	10.6
04/15/14 7:12	2.0	16.2
04/15/14 7:13	7.9	19.9
04/15/14 7:14	13.3	19.4
04/15/14 7:15	16.4	18.9
04/15/14 7:16	16.0	18.9
04/15/14 7:17	9.6	19.7
04/15/14 7:18	4.8	17.5
04/15/14 7:19	0.1	8.0
04/15/14 7:20	0.0	8.0
04/15/14 7:21	0.0	8.0
04/15/14 7:22	0.1	14.1

04/15/14 7:23	0.1	14.5
04/15/14 7:24	0.1	14.8
04/15/14 7:25	0.5	20.0
04/15/14 7:26	0.8	20.1
04/15/14 7:27	0.9	20.1
04/15/14 7:28	0.5	20.5
04/15/14 7:29	0.5	20.6
04/15/14 7:30	0.8	20.1
04/15/14 7:31	0.9	20.1
04/15/14 7:32	0.8	19.0
04/15/14 7:33	0.2	14.0
04/15/14 7:34	0.0	0.9
04/15/14 7:35	0.0	0.1
04/15/14 7:36	0.0	2.1
04/15/14 7:37	0.0	10.4
04/15/14 7:38	0.0	11.2
04/15/14 7:39	5.5	19.0
04/15/14 7:40	7.8	19.8
04/15/14 7:41	4.7	20.2
04/15/14 7:42	0.6	20.5
04/15/14 7:43	0.5	20.4
04/15/14 7:44	0.5	20.4
04/15/14 7:45	0.5	20.4
04/15/14 7:46	0.5	20.4
04/15/14 7:47	0.5	20.4
04/15/14 7:48	0.5	20.4
04/15/14 7:49	0.5	20.4
04/15/14 7:50	0.5	20.4
04/15/14 7:51	0.5	20.4
04/15/14 7:52	0.5	20.4
04/15/14 7:53	0.5	20.4
04/15/14 7:54	0.5	20.4
04/15/14 7:55	0.5	20.4
04/15/14 7:56	0.4	19.3
04/15/14 7:57	0.1	14.7
04/15/14 7:58	0.1	14.5
04/15/14 7:59	0.1	14.7
04/15/14 8:00	0.1	19.4
04/15/14 8:01	0.1	20.9
04/15/14 8:02	0.1	20.9
04/15/14 8:03	0.1	20.9
04/15/14 8:04	0.1	20.9
04/15/14 8:05	0.1	20.9
04/15/14 8:06	0.1	20.9
04/15/14 8:07	0.1	20.9
04/15/14 8:08	0.6	20.4
04/15/14 8:09	0.7	20.2
04/15/14 8:10	0.5	20.5
04/15/14 8:11	0.5	20.5
04/15/14 8:12	0.5	20.5
04/15/14 8:13	0.5	20.5
04/15/14 8:14	0.5	20.5
04/15/14 8:15	0.5	20.5
04/15/14 8:16	0.5	20.5
04/15/14 8:17	0.5	20.5
04/15/14 8:18	0.2	20.8
04/15/14 8:19	0.1	20.9
04/15/14 8:20	0.1	20.9
04/15/14 8:21	0.1	21.0
04/15/14 8:22	0.1	21.0
04/15/14 8:23	0.1	21.0
04/15/14 8:24	0.1	21.0
04/15/14 8:25	0.1	21.0
04/15/14 8:26	0.1	21.0
04/15/14 8:27	0.1	21.0
04/15/14 8:28	0.1	21.0
04/15/14 8:29	0.1	21.0
04/15/14 8:30	0.1	21.2
04/15/14 8:31	0.1	21.0
04/15/14 8:32	0.1	21.0
04/15/14 8:33	0.1	21.1
04/15/14 8:34	0.1	21.4
04/15/14 8:35	0.1	21.1

04/15/14 8:36	0.1	21.0
04/15/14 8:37	0.1	21.0
04/15/14 8:38	0.1	21.1
04/15/14 8:39	0.1	21.1
04/15/14 8:40	0.1	21.0
04/15/14 8:41	0.0	21.0
04/15/14 8:42	0.0	21.0
04/15/14 8:43	0.0	21.0
04/15/14 8:44	0.0	21.0
04/15/14 8:45	0.0	21.0
04/15/14 8:46	0.0	21.0
04/15/14 8:47	0.0	21.0
04/15/14 8:48	0.0	21.0
04/15/14 8:49	0.0	21.0
04/15/14 8:50	0.0	21.0
04/15/14 8:51	0.0	21.0
04/15/14 8:52	0.0	21.0
04/15/14 8:53	0.0	21.0
04/15/14 8:54	0.0	21.0
04/15/14 8:55	0.0	21.0
04/15/14 8:56	0.0	21.0
04/15/14 8:57	0.0	21.0
04/15/14 8:58	0.0	21.0
04/15/14 8:59	0.0	21.0
04/15/14 9:00	0.0	21.0
04/15/14 9:01	0.0	21.0
04/15/14 9:02	2.3	18.8
04/15/14 9:03	3.7	16.9
04/15/14 9:04	3.4	17.2
04/15/14 9:05	3.4	17.2
04/15/14 9:06	3.7	16.9
04/15/14 9:07	3.4	17.2
04/15/14 9:08	3.2	17.5
04/15/14 9:09	3.1	17.7
04/15/14 9:10	3.0	17.8
04/15/14 9:11	0.9	19.9
04/15/14 9:12	0.1	21.0
04/15/14 9:13	0.1	21.0
04/15/14 9:14	0.2	20.9
04/15/14 9:15	2.7	18.1

Run 1	% CO2	% O2
04/15/14 9:16	3.0	17.7
04/15/14 9:17	3.1	17.6
04/15/14 9:18	3.3	17.4
04/15/14 9:19	3.7	17.0
04/15/14 9:20	4.1	16.6
04/15/14 9:21	4.2	16.4
04/15/14 9:22	3.6	16.9
04/15/14 9:23	3.2	17.4
04/15/14 9:24	3.3	17.4
04/15/14 9:25	3.1	17.6
04/15/14 9:26	3.0	17.7
04/15/14 9:27	2.9	17.8
04/15/14 9:28	3.0	17.7
04/15/14 9:29	3.0	17.7
04/15/14 9:30	3.0	17.8
04/15/14 9:31	3.0	17.7
04/15/14 9:32	3.3	17.4
04/15/14 9:33	4.0	16.7
04/15/14 9:34	3.7	16.9
04/15/14 9:35	3.4	17.3
04/15/14 9:36	3.5	17.1
04/15/14 9:37	3.3	17.4
04/15/14 9:38	3.2	17.5
04/15/14 9:39	3.4	17.3
04/15/14 9:40	3.2	17.5
04/15/14 9:41	3.3	17.4
04/15/14 9:42	3.1	17.6
04/15/14 9:43	3.1	17.6
04/15/14 9:44	2.5	18.2
04/15/14 9:45	2.5	18.2
04/15/14 9:46	2.0	18.7
04/15/14 9:47	0.2	20.8

04/15/14 9:48	2.0	19.0
04/15/14 9:49	3.6	17.1
04/15/14 9:50	3.3	17.3
04/15/14 9:51	2.9	17.7
04/15/14 9:52	3.0	17.7
04/15/14 9:53	2.8	17.9
04/15/14 9:54	2.7	18.0
04/15/14 9:55	2.8	18.0
04/15/14 9:56	2.8	17.9
04/15/14 9:57	2.7	18.0
04/15/14 9:58	2.6	18.1
04/15/14 9:59	3.0	17.8
04/15/14 10:00	3.1	17.6
04/15/14 10:01	3.3	17.4
04/15/14 10:02	3.4	17.3
04/15/14 10:03	3.5	17.3
04/15/14 10:04	3.4	17.3
04/15/14 10:05	2.9	17.8
04/15/14 10:06	2.9	17.9
04/15/14 10:07	3.0	17.9
04/15/14 10:08	3.0	17.9
04/15/14 10:09	2.9	18.0
04/15/14 10:10	3.2	17.7
04/15/14 10:11	3.0	18.3
04/15/14 10:12	3.1	18.4
04/15/14 10:13	3.3	18.1
04/15/14 10:14	3.4	18.3
04/15/14 10:15	3.1	18.5
04/15/14 10:16	2.9	18.5
04/15/14 10:17	2.9	18.4
04/15/14 10:18	3.1	18.1
04/15/14 10:19	3.3	17.9
Avg Run 1	3.2	17.6
04/15/14 10:20	3.0	17.5
04/15/14 10:21	0.2	2.0
04/15/14 10:22	0.1	0.2
04/15/14 10:23	0.0	0.1
04/15/14 10:24	0.1	7.8
04/15/14 10:25	0.1	10.5
04/15/14 10:26	0.1	10.6
04/15/14 10:27	3.0	15.9
04/15/14 10:28	7.7	19.9
04/15/14 10:29	7.8	19.9
04/15/14 10:30	7.8	19.9
04/15/14 10:31	7.8	19.9
04/15/14 10:32	3.0	18.7
04/15/14 10:33	0.2	14.6
04/15/14 10:34	0.1	14.5
04/15/14 10:35	0.1	15.2
04/15/14 10:36	0.1	20.3
04/15/14 10:37	0.1	21.0
04/15/14 10:38	0.1	21.0
04/15/14 10:39	0.1	21.0
04/15/14 10:40	0.6	20.3
04/15/14 10:41	0.8	20.1
04/15/14 10:42	0.8	20.0
04/15/14 10:43	0.8	20.0
04/15/14 10:44	0.8	20.0
04/15/14 10:45	0.3	20.7
04/15/14 10:46	0.1	21.0
04/15/14 10:47	0.1	21.0
04/15/14 10:48	0.0	21.0
04/15/14 10:49	0.0	21.0
04/15/14 10:50	0.1	21.0
04/15/14 10:51	0.1	21.0
04/15/14 10:52	0.1	21.0
04/15/14 10:53	0.0	21.0
04/15/14 10:54	0.0	21.0
04/15/14 10:55	0.0	21.0
04/15/14 10:56	0.1	21.0
04/15/14 10:57	1.1	20.0
04/15/14 10:58	3.1	17.6
04/15/14 10:59	2.9	17.8

04/15/14 11:00	2.9	17.8
04/15/14 11:01	2.4	18.3
04/15/14 11:02	2.6	18.2
04/15/14 11:03	2.6	18.2
04/15/14 11:04	3.2	17.6
04/15/14 11:05	3.3	17.4
04/15/14 11:06	3.8	17.0
04/15/14 11:07	4.7	16.0
04/15/14 11:08	5.3	15.3
04/15/14 11:09	4.9	15.6
04/15/14 11:10	4.4	16.1
04/15/14 11:11	3.7	16.9
04/15/14 11:12	3.1	17.6

Run 2	% CO2	% O2
04/15/14 11:13	3.0	17.8
04/15/14 11:14	3.3	17.5
04/15/14 11:15	3.2	17.5
04/15/14 11:16	3.3	17.5
04/15/14 11:17	3.2	17.5
04/15/14 11:18	3.1	17.6
04/15/14 11:19	2.8	17.9
04/15/14 11:20	2.9	17.8
04/15/14 11:21	3.2	17.6
04/15/14 11:22	3.5	17.2
04/15/14 11:23	4.0	16.7
04/15/14 11:24	4.1	16.5
04/15/14 11:25	3.8	16.8
04/15/14 11:26	3.5	17.1
04/15/14 11:27	3.2	17.5
04/15/14 11:28	3.0	17.8
04/15/14 11:29	3.0	17.8
04/15/14 11:30	2.8	17.9
04/15/14 11:31	2.5	18.2
04/15/14 11:32	2.7	18.0
04/15/14 11:33	2.9	17.9
04/15/14 11:34	3.2	17.6
04/15/14 11:35	3.1	17.6
04/15/14 11:36	3.0	17.7
04/15/14 11:37	3.0	17.7
04/15/14 11:38	3.2	17.6
04/15/14 11:39	2.9	17.8
04/15/14 11:40	2.8	18.0
04/15/14 11:41	3.1	17.7
04/15/14 11:42	2.7	18.0
04/15/14 11:43	0.9	19.8
04/15/14 11:44	0.1	20.9
04/15/14 11:45	2.1	19.0
04/15/14 11:46	3.0	17.6
04/15/14 11:47	2.8	17.9
04/15/14 11:48	2.9	17.8
04/15/14 11:49	3.0	17.7
04/15/14 11:50	3.2	17.5
04/15/14 11:51	3.3	17.4
04/15/14 11:52	3.5	17.2
04/15/14 11:53	3.3	17.3
04/15/14 11:54	3.2	17.6
04/15/14 11:55	3.4	17.3
04/15/14 11:56	3.2	17.5
04/15/14 11:57	3.4	17.3
04/15/14 11:58	3.7	17.0
04/15/14 11:59	3.8	16.8
04/15/14 12:00	3.9	16.7
04/15/14 12:01	3.4	17.2
04/15/14 12:02	3.1	17.6
04/15/14 12:03	3.3	17.4
04/15/14 12:04	3.3	17.4
04/15/14 12:05	4.3	16.4
04/15/14 12:06	4.5	16.0
04/15/14 12:07	4.1	16.4
04/15/14 12:08	3.1	17.5
04/15/14 12:09	2.8	17.9
04/15/14 12:10	2.7	18.1
04/15/14 12:11	3.0	17.8

04/15/14 12:12	3.2	17.5
04/15/14 12:13	3.3	17.4
04/15/14 12:14	3.2	17.5
04/15/14 12:15	3.2	17.5
Avg Run 2	3.2	17.5
04/15/14 12:16	2.5	18.1
04/15/14 12:17	0.2	6.2
04/15/14 12:18	0.0	0.2
04/15/14 12:19	0.1	0.3
04/15/14 12:20	0.1	9.0
04/15/14 12:21	0.1	10.5
04/15/14 12:22	1.0	13.0
04/15/14 12:23	7.4	19.5
04/15/14 12:24	7.8	19.8
04/15/14 12:25	7.8	19.8
04/15/14 12:26	6.6	20.0
04/15/14 12:27	0.9	16.1
04/15/14 12:28	0.1	14.5
04/15/14 12:29	0.1	14.5
04/15/14 12:30	0.1	18.0
04/15/14 12:31	0.1	20.8
04/15/14 12:32	0.1	20.9
04/15/14 12:33	0.1	20.9
04/15/14 12:34	0.1	20.9
04/15/14 12:35	0.1	20.9
04/15/14 12:36	0.1	20.9
04/15/14 12:37	0.1	20.9
04/15/14 12:38	0.1	20.9
04/15/14 12:39	0.1	20.9
04/15/14 12:40	1.7	19.4
04/15/14 12:41	2.7	18.0
04/15/14 12:42	2.6	18.1
Run 3	% CO2	% O2
04/15/14 12:43	2.6	18.2
04/15/14 12:44	2.7	18.1
04/15/14 12:45	2.8	18.0
04/15/14 12:46	2.9	17.8
04/15/14 12:47	2.7	18.0
04/15/14 12:48	2.3	18.4
04/15/14 12:49	2.4	18.4
04/15/14 12:50	2.7	18.1
04/15/14 12:51	2.8	17.9
04/15/14 12:52	2.8	18.0
04/15/14 12:53	2.8	17.9
04/15/14 12:54	3.1	17.6
04/15/14 12:55	3.0	17.8
04/15/14 12:56	2.9	17.9
04/15/14 12:57	2.7	18.0
04/15/14 12:58	2.6	18.2
04/15/14 12:59	2.7	18.1
04/15/14 13:00	3.2	17.6
04/15/14 13:01	3.3	17.4
04/15/14 13:02	3.3	17.5
04/15/14 13:03	3.1	17.6
04/15/14 13:04	2.9	17.9
04/15/14 13:05	2.9	17.9
04/15/14 13:06	2.9	17.9
04/15/14 13:07	2.9	17.9
04/15/14 13:08	3.1	17.6
04/15/14 13:09	3.1	17.6
04/15/14 13:10	3.0	17.8
04/15/14 13:11	2.3	18.3
04/15/14 13:12	0.2	20.7
04/15/14 13:13	0.1	20.9
04/15/14 13:14	1.4	19.7
04/15/14 13:15	3.2	17.5
04/15/14 13:16	3.3	17.4
04/15/14 13:17	3.3	17.4
04/15/14 13:18	3.0	17.7
04/15/14 13:19	3.0	17.8
04/15/14 13:20	2.9	17.8
04/15/14 13:21	2.8	17.9
04/15/14 13:22	2.9	17.9

04/15/14 13:23	3.1	17.6
04/15/14 13:24	3.2	17.5
04/15/14 13:25	3.3	17.4
04/15/14 13:26	3.4	17.3
04/15/14 13:27	3.1	17.5
04/15/14 13:28	2.7	18.0
04/15/14 13:29	3.3	17.4
04/15/14 13:30	3.5	17.2
04/15/14 13:31	3.9	16.8
04/15/14 13:32	3.7	16.9
04/15/14 13:33	3.3	17.4
04/15/14 13:34	3.2	17.5
04/15/14 13:35	2.8	17.9
04/15/14 13:36	3.1	17.7
04/15/14 13:37	3.0	17.8
04/15/14 13:38	3.4	17.3
04/15/14 13:39	3.5	17.1
04/15/14 13:40	3.5	17.1
04/15/14 13:41	3.3	17.4
04/15/14 13:42	3.3	17.4
04/15/14 13:43	3.0	17.7
04/15/14 13:44	3.6	17.2
Avg Run 3	3.0	17.7
04/15/14 13:45	2.9	17.7
04/15/14 13:46	0.2	14.6
04/15/14 13:47	0.1	0.3
04/15/14 13:48	0.0	0.1
04/15/14 13:49	0.0	0.1
04/15/14 13:50	0.1	6.4
04/15/14 13:51	0.1	10.4
04/15/14 13:52	0.1	10.5
04/15/14 13:53	0.1	11.9
04/15/14 13:54	4.2	19.2
04/15/14 13:55	7.7	19.8
04/15/14 13:56	7.8	19.8
04/15/14 13:57	6.7	19.9
04/15/14 13:58	1.0	17.5
04/15/14 13:59	0.1	20.7
04/15/14 14:00	0.1	20.9
04/15/14 14:01	0.1	20.9
04/15/14 14:02	0.1	17.8
04/15/14 14:03	0.1	14.5
04/15/14 14:04	0.1	14.4
04/15/14 14:05	0.1	15.8
04/15/14 14:06	0.1	20.6
04/15/14 14:07	0.1	20.9

APPENDIX C

CALIBRATION DATA

ENVIRONMENTAL MONITORING LABORATORIES, INC.

P.O. Box 655 624 Ridgewood Road
Ridgeland, Mississippi 39158

Phone: 601/856-3092
Fax 601/853-2151

November 1, 2013

Mr. Eric Renfrow
Environmental Monitoring Laboratories, Inc.
P.O. Box 655
Ridgeland, MS 39158

Dear Mr. Renfrow:

Please be advised that you have successfully participated in the Visible Emissions Evaluation Certification conducted for the Mississippi Department of Environmental Quality (MDEQ), Office of Pollution Control and by Environmental Monitoring Laboratories on October 10 and 11, 2013, in Jackson, Mississippi. You met the following standards as specified in the November 12, 1974, issue of the Federal Register (Volume 39, No. 219, Method 9):

1) Maintained an average deviation of less than 7.5% for sets of 25 white and 25 black smoke readings.
2) Did not have any one reading with a deviation greater than 15%.

The deviations for your qualifying run, Run No. 10-1W were:

White Smoke	3.8%
Black Smoke:	3.6%

Your certification will expire on April 10, 2014.

The Office of Pollution Control has the original of your test paper. Connie Simmons of the MDEQ can be contacted at 601/961-5171 for assistance concerning this matter.

Very truly yours

ENVIRONMENTAL MONITORING LABORATORIES

Daniel G. Russell

Daniel G. Russell

ENVIRONMENTAL MONITORING LABORATORIES, INC.

P.O. Box 655 624 Ridgewood Road
Ridgeland, Mississippi 39158

Phone: 601/856-3092
Fax 601/853-2151

May 1, 2014

Mr. Eric Renfrow
Environmental Monitoring Laboratories, Inc.
P.O. Box 655
Ridgeland, MS 39158

Dear Mr. Renfrow:

Please be advised that you have successfully participated in the Visible Emissions Evaluation Certification conducted for the Mississippi Department of Environmental Quality (MDEQ), Office of Pollution Control and by Environmental Monitoring Laboratories on April 17, 2014, in Jackson, Mississippi. You met the following standards as specified in the November 12, 1974, issue of the Federal Register (Volume 39, No. 219, Method 9):

1) Maintained an average deviation of less than 7.5% for sets of 25 white and 25 black smoke readings.
2) Did not have any one reading with a deviation greater than 15%.

The deviations for your qualifying run, Run No. 17-1W were:

White Smoke	3.8%
Black Smoke:	5.4%

Your certification will expire on October 17, 2014.

The Mississippi Department of Environmental Quality has the original of your test paper. Connie Simmons of the MDEQ can be contacted at 601/961-5171 for assistance concerning this matter.

Very truly yours

ENVIRONMENTAL MONITORING LABORATORIES

Daniel G. Russell

Daniel G. Russell

DRY GAS METER CALIBRATION

By Critical Orifice

Meter ID	Nutech 2	**Date**	01/06/14
Orifice ID	1312	**By**	Ballard
T, Amb	70	**Pbar**	30.20

Orifice			ΔH	VAC	Time	Meter						Vmstd	Vcrstd	Y	ΔH@
No.	K'	Q'	in.	in.	min.	Vi	Vf	Temp. in		Temp out					
		cfm	H_2O	Hg		ft^3	ft^3	init.	final	init.	final				
12	0.3169	0.42	0.48	24	14.00	900.205	906.070	73	72	71	70	5.881	5.913	1.005	1.513
17	0.4391	0.58	0.95	22	12.00	906.070	913.282	72	73	70	70	7.235	6.999	0.967	1.570
23	0.6091	0.80	1.95	21	6.00	913.282	918.292	73	73	70	70	5.024	4.827	0.961	1.690
26	0.6905	0.92	2.50	19	6.00	918.292	924.042	73	74	70	71	5.760	5.551	0.964	1.635
31	0.8293	1.10	3.60	17	6.00	924.042	930.941	74	75	71	71	6.901	6.637	0.962	1.641
														0.972	1.61

Calculations:

Vm = [Vf-Vi]

Vmstd = [(17.64)(Vm)(Pbar+ΔH/13.6)/Tm]

Vcrstd = K'[(Pbar)(θ)/(T,amb)]

Y = [(Vcrstd/Vmstd)]

Q = [(Vm/θ)(Tm out/Tm)(Y)]

K = [Q(sqrt((Pm Mm)/((Tm out)(ΔH))]

ΔH@ = [$0.921/K^2$]

Where:

Pbar = Barometric pressure; in. Hg

Tm = Average Temp. at meter, °R

Pm = Meter pressure, (Pbar + ΔH/13.6); in. Hg

Mm = molecular weight of air (29)

Y = Meter correction factor; dimensionless

DRY GAS METER CALIBRATION

By Critical Orifice

Meter ID	Nutech 2	2962144	**Date**	04/11/14	
Orifice ID	1312		**By**	Norwood	
T, Amb	72		**Pbar**	29.96	

Orifice			ΔH	VAC	Time	Meter						Vmstd	Vcrstd	Y	ΔH@
No.	K'	Q'	in.	in.	min.	Vi	Vf	Temp. in		Temp out					
		cfm	H_2O	Hg		ft^3	ft^3	init.	final	init.	final				
17	0.4391	0.58	0.94	23.0	10.00	232.500	238.210	79	79	74	75	5.624	5.764	1.025	1.565
23	0.6091	0.80	1.85	20.0	8.00	238.210	244.508	79	81	75	76	6.192	6.360	1.027	1.612
26	0.6905	0.92	2.45	19.0	8.00	244.508	251.743	81	83	76	76	7.097	7.314	1.031	1.611
														1.028	1.60

Calculations:

Vm = [Vf-Vi]

Vmstd = [(17.64)(Vm)(Pbar+ΔH/13.6)/Tm]

Vcrstd = K'[(Pbar)(θ)/(T,amb)]

Y = [(Vcrstd/Vmstd)]

Q = [(Vm/θ)(Tm out/Tm)(Y)]

K = [Q(√((Pm Mm)/((Tm out)(ΔH))]

ΔH@ = [$0.921/K^2$]

Where:

Pbar = Barometric pressure; in. Hg

Tm = Average Temp. at meter, °R

Pm = Meter pressure, (Pbar + ΔH/13.6); in. Hg

Mm = molecular weight of air (29)

Y = Meter correction factor; dimensionless

ANALYZER CALIBRATION RECORD (EML V3 Effective 093013)

Plant	MG	Conyngham, PA	DATE 09/05/14
Source	Basic-RC		
Test For	O_2		
Operators	Kuhn		

Analyte, units / Analyzer ID / Span / DAQ Channel	Level	Cal. Value	Cyl. Ref	Diluted Y/N	Cal. Reading	Start / End	Run 1	Run 2	Run 3
						Start	0918	1115	1247
						End	1022	1218	047
						Bias	1	2	3
%O_2	Zero	0.0	N2	N	0.0		0.0	0.0	0.0
0194 OC102-280	Low								
16	Mid	8.0	1	Y	8.0		7.9	7.8	7.8
2	High	16.0	1	Y	16.0				
% O_2	Zero	0.0	N2	N	0.0		0.1	0.1	0.1
Servomex 1100	Low								
20.9	Mid	10.5	N2/Air	Y	10.5		10.5	10.5	10.5
3	High	20.9	Air	N	20.9				
	Zero								
	Low								
	Mid								
	High								
	Zero								
	Low								
	Mid								
	High								
	Zero								
	Low								
	Mid								
	High								
	Zero								
	Low								
	Mid								
	High								

Cylinder Ref.	Cylinder No.	Contents	Expiration Date	Notes
1	CL120673	O_2 17.67 % CO_2 24.90 %	9-6-20	Data logger 2 min behind

Analyst's signature: [signature]

Method Specifications:

Methods 3A, 6C, 7E	Method 25A
Zero = 20 % of span (can be zero)	Zero = 0.1 % of span
Mid = 40 to 60 % of span	Low = 25 to 35 % of span
High = span	Mid = 45 to 55 % of span
	High = 80 to 90 % of span

Error Specifications:

Calibration Error Allowable	< 2% of span	[(Cyl. Value - Reading) / span]* 100%
25A Calibration Error Allowable	< 5% Cyl. Value	[(Cyl. Value - Reading) / (Cyl. Value)] *100%
System Bias	< 5% span (not for 3A & 25A)	[(System Cal. - Reading)/span]*100]
Drift	< 3%	[(Initial System Cal. - Final System Cal.) / Span * 100%]
Method 3A Drift	< 2%	[(Initial system cal. - final system cal.) / Span * 100%]

17.4
31

METHOD 205 - VERIFICATION OF GAS DILUTION SYSTEMS (EML V-0 Effective 093013)

DATE	04/14/14

PROJECT: PHG

ANALYST: Otis Rayburn SIGNATURE: [illegible]

DILUTION SYSTEM

MAKE	Environics
MODEL	4040/7616
NO. OF DIL. DEVICES	4
TYPE OF DIL. DEVICE	MFC

REFERENCE MONITOR

TYPE	NO_x
MAKE	Serinus
MODEL	1400
SPAN	205

HIGH LEVEL SUPPLY GAS CONC.	209	CYLINDER ID	Air
MID LEVEL SUPPLY GAS CONC.	10.5	CYLINDER ID	CC287719
DILUTION GAS	0.0	CYLINDER ID	Nitrogen

MFC No.									
Target Value	10.5	5.2							

Injections **(Triplicate injection of 2 dilutions per MFC to be used)**

1st	10.5	5.1								
2nd	10.5	5.1								
3rd	10.5	5.1								
Average	10.5	5.1								

% Difference = ((target conc. - Avg. conc.)/target conc.)*100 **Must be within 2% of avg.**

1st inject	0.0	1.9								
2nd inject	0.0	1.9								
3rd inject	0.0	1.9								

Triplicate injection of Mid Level Gas to Reference Monitor. Must be within 10% of one dilution

	Response	% Difference
1st	10.6	0.0
2nd	10.6	0.0
3rd	10.6	0.0
Average	10.6	0.0

Average must be within +/- 2% of the certified gas concentration.

Airgas

CERTIFICATE OF ANALYSIS
Grade of Product: EPA Protocol

Part Number:	E02NI89E15A1597	Reference Number:	122-124334959-1
Cylinder Number:	CC287719	Cylinder Volume:	145.3 CF
Laboratory:	ASG - Durham - NC	Cylinder Pressure:	2015 PSIG
PGVP Number:	B22012	Valve Outlet:	590
Gas Code:	O2,BALN	Certification Date:	Sep 05, 2012

Expiration Date: Sep 05, 2020

Certification performed in accordance with "EPA Traceability Protocol for Assay and Certification of Gaseous Calibration Standards (May 2012)" document EPA 600/R-12/531, using the assay procedures listed. Analytical Methodology does not require correction for analytical interference. This cylinder has a total analytical uncertainty as stated below with a confidence level of 95%. There are no significant impurities which affect the use of this calibration mixture. All concentrations are on a volume/volume basis unless otherwise noted.

Do Not Use This Cylinder below 100 psig, i.e. 0.7 megapascals.

ANALYTICAL RESULTS

Component	Requested Concentration	Actual Concentration	Protocol Method	Total Relative Uncertainty	Assay Dates
OXYGEN	10.50 %	10.57 %	G1	+/- 1% NIST Traceable	09/05/2012
NITROGEN	Balance				

CALIBRATION STANDARDS

Type	Lot ID	Cylinder No	Concentration	Uncertainty	Expiration Date
NTRM	82658	SG9163064BAL	9.507 % OXYGEN/NITROGEN	+/- 0.6%	Dec 01, 2015

ANALYTICAL EQUIPMENT

Instrument/Make/Model	Analytical Principle	Last Multipoint Calibration
Horiba MPA510 O2 41499150042	Paramagnetic	Aug 24, 2012

Triad Data Available Upon Request

Notes:ANW Part #780962

Signature on file

Approved for Release

Airgas

Airgas Specialty Products
Airgas Specialty Gasses
630 United Drive
Durham, NC 27713
(919)544-3773 Fax: (919)544-3774
www.airgas.com

CERTIFICATE OF ANALYSIS
Grade of Product: EPA Protocol

Part Number:	E03NI57E15A0000	Reference Number:	122-124334249-1
Cylinder Number:	CC120673	Cylinder Volume:	164 Cu.Ft.
Laboratory:	ASG - Durham - NC	Cylinder Pressure:	2015 PSIG
PGVP Number:	B22012	Valve Outlet:	590
		Analysis Date:	Sep 06, 2012

Expiration Date: Sep 06, 2020

Certification performed in accordance with "EPA Traceability Protocol for Assay and Certification of Gaseous Calibration Standards (May 2012)" document EPA 600/R-12/531, using the assay procedures listed. Analytical Methodology does not require correction for analytical interference. This cylinder has a total analytical uncertainty as stated below with a confidence level of 95%. There are no significant impurities which affect the use of this calibration mixture. All concentrations are on a volume/volume basis unless otherwise noted.
Do Not Use This Cylinder below 100 psig, i.e. 0.7 megapascals.

ANALYTICAL RESULTS

Component	Requested Concentration	Actual Concentration	Protocol Method	Total Relative Uncertainty
OXYGEN	18.00 %	17.67 %	G1	+/- 1% NIST Traceable
CARBON DIOXIDE	25.00 %	24.90 %	G2	+/- 1% NIST Traceable
NITROGEN	Balance			

CALIBRATION STANDARDS

Type	Lot ID	Cylinder No	Concentration	Expiration Date
NTRM	090614	CC273522	22.53% OXYGEN/NITROGEN	Aug 01, 2013
NTRM	120615	CC354889	19.87% CARBON DIOXIDE/NITROGEN	Jan 27, 2018

ANALYTICAL EQUIPMENT

Instrument/Make/Model	Analytical Principle	Last Multipoint Calibration
Horiba VIA510 CO2 J007MEB	Nondispersive Infrared (NDIR)	Aug 29, 2012
Horiba MPA510 O2 41499150042	Paramagnetic	Aug 24, 2012

Triad Data Available Upon Request

Notes:

Approved for Release

Page 1 of 122-124334249-1

APPENDIX D

OPERATING DATA (PHG)

Covington Emission Test

Date: 4-15-14	Run #: 1		Run #: 2		Run #: 3	
Time:	9:01	9:31	11:15	11:45	12:42	1:12
Combustion Blower VFD HZ	17	15	18	15	15	15
Combustion Blower Air Flow	759	695	755	559	559	484
BL 110 Discharge Inches H2O	-0.91	-0.91	-0.46	-0.91	-0.91	-0.91
BI-107 Discharge Inches H2O	3.73	na	na	na	na	na
Dryer Inlet Temp	270	253	313	265	319	257
Dryer Outlet Temp	106	93	138	85	129	94
Stack Temp	64	61	70	67	73	69
Stack Air Flow	1560	3371	3131	2676	1592	3512
Stack Air Flow Testing Company		3500		3500		3765
Oil Heater Outlet Temp TT-401B	224	208	226	205	202	202
Oil Heater Inlet Temp TT-401A	191	182	192	178	178	178
Oil Heater Flue In Temp TT402B	554	520	574	521	515	510
Oil Heater Flue Out Temp TT402A	96	87	106	92	110	97
Oil Flow FT-403	234	232	235	232	232	232
DPIT 401	30	30	30	30	30	30
PIT 401 B	49	49	49	49	49	50
O2 analyzer %02	8.05	8.16	8.47	7.97	9.53	8.92
Stack %02 Testing Company		17.14		17.17		17.7
NOX PPM Instantaneous	na	na	na	na	na	na
CO PPM Instantaneous	na	na	na	na	na	na
Thermal Oxidizer Temp	1691	1585	1657	1556	1476	1477
TY-151 A position Dilution	0	0	0	0	0	0
TY 151 B position Producer Gas	100	100	100	100	100	100
Bed CFM	90	90	90	90	86	86
Plano CFM	36	36	37	36	37	37
Bed PSI	1.91	1.82	1.6	1.89	1.37	1.37
Plano PSI	1.9	1.97	1.64	1.92	1.5	1.52
Bed Valve %	70	70	70	70	70	70
Plano Valve %	30	30	30	30	30	30
RXDP PSI	1.50	1.45	1.23	1.53	1.07	1.13
Hot Gas PSI	0.42	0.40	0.42	0.44	0.43	0.44
Grate RPM	0.0002	0.0002	0.0002	0.0002	0.0002	0.0002
Pounds Hour Metering Feed Auger SC104	794	794	~~1074~~	792	792	792
Gasifier Feed Auger (after each run)		470		441		395
Producer Gas Temp	725	715	683	701	700	675
Sludge Rate ACT Calculation	150	138	25	105		126
Sludge Load Cell Begin Weight	**2867**	2798	2737	2694	2616	2548
Natural Gas Flow Meter Reading ccf	9798	9798	9800	9800	9801	9801
ORC KW	35	27	39	27	24	23
ORC Water In	55	55	56	56	56	56
ORC Water Out	60	60	61	60	60	60
Outfall Water Out	na	na	na	na	na	na
ORC Super Heat	47.5	49.5	50.8	49.8	50.3	51.3
ORC Sub Cool	41.4	41.4	41.4	41.4	41.4	41.4
Pull sludge samples beginning each run	x	x	x	x	x	x
Pull feedstock sample dryer outlet 15 min intervals						
Stack Tester Estimated MMBTU		2.8		2.95		3.3
Comments:	Sludge was stopped at end of each run and restarted just prior to each run.					
	Load cells were used for sludge rate.					

	69	43	68
lb/hr sludge	138	86	136

APPENDIX E

SLUDGE ANALYSIS FOR Hg (DAT)

DAT Reports®

Data Analysis Technologies, Inc.
7715 Corporate Blvd.
Plain City, OH 43064
800-733-8644

Sample Analysis Certificate

Client:	Environmental Monitoring Labs	Date:	5/21/2014
Address:	P.O. Box 655	DAT Project ID:	0414023
	Ridgeland, MS 39157	Date Received:	4/22/2014

Attn: Daniel Russell
Client Project: PHG-4/15/2014
Analysis: Hg – Method 7471

The following samples were received on 4/22/2014:

DAT Sample ID	Client Sample ID	Date Sampled	Matrix
0414023-4	PHG Sludge 1	4/15/2014	Sludge
0414023-5	PHG Sludge 2	4/15/2014	Sludge
0414023-6	PHG Sludge 3	4/15/2014	Sludge

Results: See attached summary.

QC: Met the criteria for the method.

Reviewed and approved for release by: Date: 5/21/2014

Ronald K. Mitchum, Ph.D.
President, DAT

This document may not be reproduced, except in full with written permission from DAT Labs.

DAT Reports®

Data Summary
Method 7471 / Mercury

Client:	Environmental Monitoring Laboratory
Client Project:	PHG-4/15/2014
DAT Project:	0414023
Date Sampled:	4/15/2014
Date Received:	4/22/2014
Date Prepped:	5/19/2014
Date Analyzed:	5/19/2014
Analyst:	JK

Client Sample ID	DAT Sample ID	Analyte	*Sample Result ug/g(ppm)*	*Sample PQL ppm*	*Q*
PHG Sludge 1	0414023-4	Mercury	0.134	*0.01*	
PHG Sludge 2	0414023-5	Mercury	0.121	*0.01*	
PHG Sludge 3	0414023-6	Mercury	0.039	*0.01*	

ND = Not detected at the quantitation limit shown.
D = Value measured from a dilution.
Q = Qualifier

DAT Reports®

QC Summary
Method 7471 / Mercury

Client: Environmental Monitoring Laboratory
Client Project: PHG-4/15/2014
DAT Project: 0414023
Date Sampled: 4/15/2014
Date Received: 4/22/2014
Date Prepped: 5/19/2014
Date Analyzed: 5/19/2014
Analyst: JK

Sample Type	DAT Sample ID	Analyte	Instr. Conc., mg/L	Dilution Factor	Sample Conc., mg/L	PQL, mg/L	% Recov.	% RSD
Method Blank	0414023 MB	Hg	0.000	1	ND	0.020		
Lab Control Spike	0414023- LCS	Hg	10.590	1	10.590	0.020	105.9%	
Matrix Spike	0414023 -4 ms	Hg	12.340	1	12.340	0.020	104.6%	
Matrix Spike Dup	0414023 -4 msd	Hg	12.060	1	12.060	0.020	101.8%	2.3%

Laboratory Spike Recovery QC range = 80 - 120%
Matrix Spike Recovery QC range = 75 - 125%

ND = Not detected at the detection limit shown.
D = Value measured from a dilution.

DAT
Data Analysis Technologies, Inc.

Total Percent Solids/EPA 160.3

Project #: 0414023 Time in oven: 1700 Temperature of oven (IN): 112

Analyst: JK Time out of oven: 1000 Temperature of oven (OUT): 115

% Solid = ((c-a)/b)*100 % Moisture = 100 - d

Sample ID	Start Date	a Tare Weight	b Wet wt (g) Sample - tare	End Date	c Dry wt (g) Sample + tare	d % Solids	e % Moisture (100-% Solids)	Comments
0414023-4	5/19	0.9503	6.7646	5/20	1.9727	15.11		
-5	↓	0.9524	7.1873	↓	2.0409	15.14		
-6	↓	0.9508	7.8020	↓	2.0919	14.63		

DATFRM1026
Effective 04/07/08

CHAIN OF CUSTODY AND REQUEST FOR ANALYSIS

ENVIRONMENTAL MONITORING LABORATORIES
POST OFFICE BOX 655
RIDGELAND, MISSISSIPPI 39158

PHONE 601/856-3092
FAX: 601/853-2151 Attention: Danny Russell

Data Analysis Technologies
7715 Corporate Blvd.
Plain City, Ohio 43064 614-873-0710
Please return copy of chain of custody with analytical report

Project: PHG Covington, MS

Wood and Sludge Gassifier Stack test on April 15, 2015

No. of containers	SAMPLE ID	Sample matrix	ANALYSES REQUESTED: Hg and moisture	UNITS
1	PHG Sludge 1	wet solid	x	
1	PHG Sludge 2	wet solid	x	
1	PHG Sludge 3	wet solid	x	

Relinquished by: (print name; initial)	Date/time	Received by: (print name; initial)	Date/time
Rayburn	04/16/14	Russell	04/16/14
Relinquished by: (print name; initial)			Date/time
Relinquished by: (print name; initial) Russell	04/21/14	R.K. Mitchum / [illegible]	Date/time 4/22/2014
COURIER Fed-Ex	Date Shipped 04/21/14		Date/time

APPENDIX E

FUEL ULTIMATE ANALYSIS (DAT)

Lab No. 40423304

Date Rec'd. 4/22/2014

Date Sampled

Sampled By YOURSELVES

STANDARD LABORATORIES, INC.
Box 606
Whitesburg, KY 41858
Tel: (606) 633-9373
Fax: (606) 633-8136

ENVIRONMENTAL MONITORING LABORATORIES
P.O. BOX 655
RIDGELAND, MS 39158

WOOD FUEL
SAMPLE #1

	%Moisture	%Ash	%Volatile	Fixed Carbon	BTU/LB	%Sulfur
As Rec'd.	42.69	2.19	XXXX	XXXX	5368	0.04
Dry Basis	----------	3.82	XXXX	XXXX	9367	0.07
M-A-Free					9739	

LBS SO2 / MMBTU: 0.15 LBS ASH / MMBTU:4.08

NOTE: XXXX INDICATES ANALYSIS WAS NOT PERFORMED

THIS DOCUMENT HAS BEEN PRINTED ON CONTROLLED PAPER STOCK. NOT VALID IF ALTERED.

Respectfully Submitted,

Billy Mullins and Delano Thomas Mgrs.

FORM # 21

Lab No. 40423304

Date Rec'd 04/22/14

Date Sampled

Sampled By YOURSELVES

STANDARD LABORATORIES, INC.
PO BOX 606
WHITESBURG, KY 41858
TEL: 606-633-9373
FAX: 606-633-8136

ENVIRONMENTAL MONITORING LABORATORIES
PO BOX 655
RIDGELAND, MISSISSIPPI 39158

Sample ID: WOOD FUEL
SAMPLE #1

ULTIMATE ANALYSIS OF COAL	% DRY BASIS
ASH:	3.82
HYDROGEN:	5.85
CARBON:	49.60
NITROGEN:	0.62
SULFUR:	0.07
OXYGEN:	40.04

Respectfully Submitted:
BILLY MULLINS / MANAGER
DELANO T. THOMAS/ ASSISTANT MANAGER

Lab No. 40423305

Date Rec'd. 4/22/2014

Date Sampled

Sampled By YOURSELVES

STANDARD LABORATORIES, INC.
Box 606
Whitesburg, KY 41858
Tel: (606) 633-9373
Fax: (606) 633-8136

ENVIRONMENTAL MONITORING LABORATORIES
P.O. BOX 655
RIDGELAND, MS 39158

WOOD FUEL
SAMPLE #2

	%Moisture	%Ash	%Volatile	Fixed Carbon	BTU/LB	%Sulfur
As Rec'd.	44.36	3.11	XXXX	XXXX	4705	0.06
Dry Basis	----------	5.59	XXXX	XXXX	8457	0.11
M-A-Free					8958	

LBS SO2 / MMBTU: 0.26 LBS ASH / MMBTU:6.61

NOTE: XXXX INDICATES ANALYSIS WAS NOT PERFORMED

THIS DOCUMENT HAS BEEN PRINTED ON CONTROLLED PAPER STOCK. NOT VALID IF ALTERED.

Respectfully Submitted,

Billy Mullins and Delano Thomas Mgrs.

FORM # 21

Lab No. 40423305

Date Rec'd 04/22/14

Date Sampled

Sampled By YOURSELVES

STANDARD LABORATORIES, INC.
PO BOX 606
WHITESBURG, KY 41858
TEL: 606-633-9373
FAX: 606-633-8136

ENVIRONMENTAL MONITORING LABORATORIES
PO BOX 655
RIDGELAND, MISSISSIPPI 39158

Sample ID: WOOD FUEL
SAMPLE #2

ULTIMATE ANALYSIS OF COAL	% DRY BASIS
ASH:	5.59
HYDROGEN:	5.77
CARBON:	49.11
NITROGEN:	0.97
SULFUR:	0.11
OXYGEN:	38.45

Respectfully Submitted:
BILLY MULLINS / MANAGER
DELANO T. THOMAS/ ASSISTANT MANAGER

Lab No. 40423306

Date Rec'd. 4/22/2014

Date Sampled

Sampled By YOURSELVES

STANDARD LABORATORIES, INC.
Box 606
Whitesburg, KY 41858
Tel: (606) 633-9373
Fax: (606) 633-8136

ENVIRONMENTAL MONITORING LABORATORIES
P.O. BOX 655
RIDGELAND, MS 39158

WOOD FUEL
SAMPLE #3

	%Moisture	%Ash	%Volatile	Fixed Carbon	BTU/LB	%Sulfur
As Rec'd.	44.03	2.88	XXXX	XXXX	4775	0.07
Dry Basis	----------	5.15	XXXX	XXXX	8532	0.12
M-A-Free					8995	

LBS SO2 / MMBTU: 0.28 LBS ASH / MMBTU:6.04

NOTE: XXXX INDICATES ANALYSIS WAS NOT PERFORMED

THIS DOCUMENT HAS BEEN PRINTED ON CONTROLLED PAPER STOCK. NOT VALID IF ALTERED.

Respectfully Submitted,

Billy Mullins and Delano Thomas Mgrs.

FORM # 21

Lab No. 40423306

Date Rec'd 04/22/14

Date Sampled

Sampled By YOURSELVES

STANDARD LABORATORIES, INC.
PO BOX 606
WHITESBURG, KY 41858
TEL: 606-633-9373
FAX: 606-633-8136

ENVIRONMENTAL MONITORING LABORATORIES
PO BOX 655
RIDGELAND, MISSISSIPPI 39158

Sample ID: WOOD FUEL
SAMPLE #3

ULTIMATE ANALYSIS OF COAL	% DRY BASIS
ASH:	5.15
HYDROGEN:	5.80
CARBON:	49.06
NITROGEN:	0.94
SULFUR:	0.12
OXYGEN:	38.93

Respectfully Submitted: Billy Mullins
BILLY MULLINS / MANAGER
DELANO T. THOMAS/ ASSISTANT MANAGER

Lab No. 40423307

Date Rec'd. 4/22/2014

Date Sampled

Sampled By YOURSELVES

STANDARD LABORATORIES, INC.
Box 606
Whitesburg, KY 41858
Tel: (606) 633-9373
Fax: (606) 633-8136

ENVIRONMENTAL MONITORING LABORATORIES
P.O. BOX 655
RIDGELAND, MS 39158

SLUDGE FUEL
SAMPLE #1

	%Moisture	%Ash	%Volatile	Fixed Carbon	BTU/LB	%Sulfur
As Rec'd.	82.89	5.12	XXXX	XXXX	1266	0.20
Dry Basis	---------	29.95	XXXX	XXXX	7399	1.18
M-A-Free					10562	

LBS SO2 / MMBTU: 3.19 LBS ASH / MMBTU:40.48

NOTE: XXXX INDICATES ANALYSIS WAS NOT PERFORMED

THIS DOCUMENT HAS BEEN PRINTED ON CONTROLLED PAPER STOCK. NOT VALID IF ALTERED

Respectfully Submitted,

Billy Mullins and Delano Thomas Mgrs.

FORM # 21

Lab No. 40423307

Date Rec'd 04/22/14

Date Sampled

Sampled By YOURSELVES

STANDARD LABORATORIES, INC.
PO BOX 606
WHITESBURG, KY 41858
TEL: 606-633-9373
FAX: 606-633-8136

ENVIRONMENTAL MONITORING LABORATORIES
PO BOX 655
RIDGELAND, MISSISSIPPI 39158

Sample ID: SLUDGE FUEL
SAMPLE #1

ULTIMATE ANALYSIS OF COAL	% DRY BASIS
ASH:	29.95
HYDROGEN:	5.20
CARBON:	39.53
NITROGEN:	6.88
SULFUR:	1.18
OXYGEN:	17.26

Respectfully Submitted:
BILLY MULLINS / MANAGER
DELANO T. THOMAS/ ASSISTANT MANAGER

Lab No. 40423308

Date Rec'd. 4/22/2014

Date Sampled

Sampled By YOURSELVES

STANDARD LABORATORIES, INC.
Box 606
Whitesburg, KY 41858
Tel: (606) 633-9373
Fax: (606) 633-8136

ENVIRONMENTAL MONITORING LABORATORIES
P.O. BOX 655
RIDGELAND, MS 39158

SLUDGE FUEL
SAMPLE #2

	%Moisture	%Ash	%Volatile	Fixed Carbon	BTU/LB	%Sulfur
As Rec'd.	82.05	5.43	XXXX	XXXX	1320	0.21
Dry Basis	--------	30.23	XXXX	XXXX	7351	1.17
M-A-Free					10536	

LBS SO2 / MMBTU: 3.18 LBS ASH / MMBTU:41.12

NOTE: XXXX INDICATES ANALYSIS WAS NOT PERFORMED

THIS DOCUMENT HAS BEEN PRINTED ON CONTROLLED PAPER STOCK. NOT VALID IF ALTERED.

Respectfully Submitted,

Billy Mullins and Delano Thomas Mgrs.

Lab No. 40423308

Date Rec'd 04/22/14

Date Sampled

Sampled By YOURSELVES

STANDARD LABORATORIES, INC.
PO BOX 606
WHITESBURG, KY 41858
TEL: 606-633-9373
FAX: 606-633-8136

ENVIRONMENTAL MONITORING LABORATORIES
PO BOX 655
RIDGELAND, MISSISSIPPI 39158

Sample ID: SLUDGE FUEL
SAMPLE #2

ULTIMATE ANALYSIS OF COAL	% DRY BASIS
ASH:	30.23
HYDROGEN:	5.18
CARBON:	39.70
NITROGEN:	6.96
SULFUR:	1.17
OXYGEN:	16.76

Respectfully Submitted:
BILLY MULLINS / MANAGER
DELANO T. THOMAS/ ASSISTANT MANAGER

FORM # 21

Lab No. 40423309

Date Rec'd. 4/22/2014

Date Sampled

Sampled By YOURSELVES

STANDARD LABORATORIES, INC.
Box 606
Whitesburg, KY 41858
Tel: (606) 633-9373
Fax: (606) 633-8136

ENVIRONMENTAL MONITORING LABORATORIES
P.O. BOX 655
RIDGELAND, MS 39158

SLUDGE FUEL
SAMPLE #3

	%Moisture	%Ash	%Volatile	Fixed Carbon	BTU/LB	%Sulfur
As Rec'd.	82.66	5.18	XXXX	XXXX	1270	0.20
Dry Basis	---------	29.90	XXXX	XXXX	7324	1.17
M-A-Free					10448	

LBS SO2 / MMBTU: 3.19 LBS ASH / MMBTU:40.82

NOTE: XXXX INDICATES ANALYSIS WAS NOT PERFORMED

THIS DOCUMENT HAS BEEN PRINTED ON CONTROLLED PAPER STOCK. NOT VALID IF ALTERED.

Respectfully Submitted,

Billy Mullins and Delano Thomas Mgrs.

FORM # 21

Lab No. 40423309

Date Rec'd 04/22/14

Date Sampled

Sampled By YOURSELVES

STANDARD LABORATORIES, INC.
PO BOX 606
WHITESBURG, KY 41858
TEL: 606-633-9373
FAX: 606-633-8136

ENVIRONMENTAL MONITORING LABORATORIES
PO BOX 655
RIDGELAND, MISSISSIPPI 39158

Sample ID: SLUDGE FUEL
SAMPLE #3

ULTIMATE ANALYSIS OF COAL	% DRY BASIS
ASH:	29.90
HYDROGEN:	5.12
CARBON:	39.69
NITROGEN:	6.83
SULFUR:	1.17
OXYGEN:	17.29

Respectfully Submitted:
BILLY MULLINS / MANAGER
DELANO T. THOMAS/ ASSISTANT MANAGER

FORM X 21

THIS IS THE LAST PAGE

OF THIS REPORT