Tab	Parameter	Unit	Default	Inputs
Case	Dose/Risk Library		FGR 11	DCFPAK 3.02
	Exposure duration	d	365	9490
	Indoor fraction		0.5	1
Building	Room area	m2	36	13.4
	Room height	m2	2.5	3.05
	Building exchange rate	1/h	0.8	0
Units	Activity		pCi	pCi
	Dose		mrem	mrem
Receptor	Time fraction		1	0.542
	Breathing rate	m3/d	18	13.4
	Ingestion rate (indirect)	m2/h	0.0001	0.00E+00
	Location	x,y,z m	1,1,1	1.83,1.83,1
Source				
1 (Wall 1)	Type		Volume	Area
	Direction		X	Z
	Location	x,y,z m	0,0,0	0,1.83,1
	Geometry		Circular	Rectangular
	Area	m2	36	
	Length along X-axis	m	n/a	0
	Length along Y-axis	m	n/a	3.66
	Length along Z-axis	m	n/a	2
2 (Wall 2)	Type		Volume	Area
	Direction		X	Y
	Location	x,y,z m	0,0,0	1.83,3.66,1
	Geometry		Circular	Rectangular
	Area	m2	36	
	Length along X-axis	m	n/a	3.66
	Length along Y-axis	m	n/a	0
	Length along Z-axis	m	n/a	2
3 (Wall 3)	Type		Volume	Area
	Direction		X	X
	Location	x,y,z m	0,0,0	3.66,1.83,1
	Geometry		Circular	Rectangular
	Area	m2	36	
	Length along X-axis	m	n/a	0
	Length along Y-axis	m	n/a	3.66
	Length along Z-axis	m	n/a	2
4 (Wall 4)	Type		Volume	Area
	Direction		X	Y
	Location	x,y,z m	0,0,0	1.83,0,1
	Geometry		Circular	Rectangular

Reference
https://epa-bprg.ornl.gov/documents/SlopesandDosesMasterTableFinal.pdf

26 y * 365 d/y

EFH Ch 19 (2018), Table 19-12, chose square room to match BPRG shapes, 12'x12'x10'
10-ft high, EFH Ch 19 (2018), Table 19-12
Suppresses source loss due to room air flow

Age-weighted, see calculation at right:
Age-weighted, see calculation at right:
For source mass balance, all ingestion forced to direct
Centered in room

Lower wall only, uniformly contaminated

12-ft wide
2-m high
Lower wall only, uniformly contaminated

12-ft wide

2-m high
Lower wall only, uniformly contaminated

12-ft wide
2-m high
Lower wall only, uniformly contaminated

EFH, Table 6-1

Age	ED (y)	Inhalation rate (m3/d)
0-0.5 y	0.5	3.82
0.5-4 y	3.5	8.49
4-5 y	1	10.10
5-6 y	1	10.10
6-11 y	5	12.00
11-12 y	1	15.20
12-19 y	7	15.67
19-20 y	1	16.30
20-26 y	6	15.80
Child	***6***	
Adult	***20***	
Child SUM (ED*Inh ra		51.8
Adult SUM (ED*Inh ra		296
Age-weighted resident inhalation		**13.4**

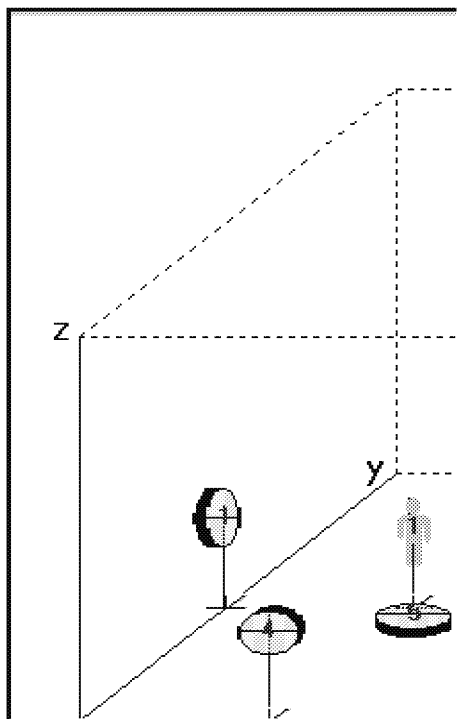

EFH (2017), Table 5-13		
Sleep time, ST (h/d)	Outdoor time, TO (h/d)	ET (h/d)
13	0	11
10.5	1.2	12.3
10.2	1.7	12.1
9.9	2.2	11.9
9.9	2.2	11.9
9.5	1.8	12.7
9.1	1.4	13.5
8.75	1.4	13.85
8.4	1.4	14.2
Child SUM(ED*ET)		72.55
Adult SUM(ED*ET)		265.75
Age-weighted resident ET (h/dh)		**13.01**
Age-weighted resident F		**0.542**

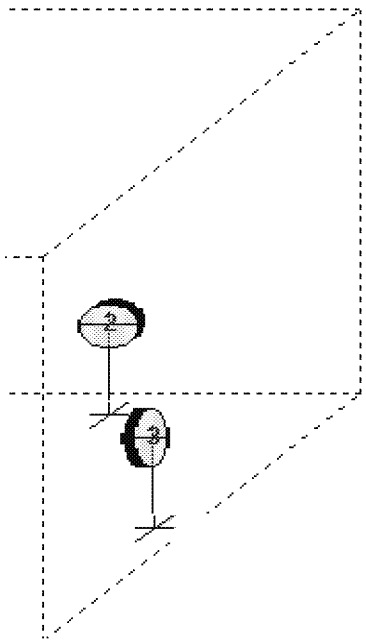

	Area	**m2**	36	
	Length along X-axis	**m**	n/a	3.66
	Length along Y-axis	**m**	n/a	0
	Length along Z-axis	**m**	n/a	2
5 (Floor)	**Type**		Volume	Area
	Direction		X	Z
	Location	**x,y,z m**	0,0,0	1.83,1.83,0
	Geometry		Circular	Rectangular
	Area	**m2**	36	
	Length along X-axis	**m**	n/a	3.66
	Length along Y-axis	**m**	n/a	3.66
	Length along Z-axis	**m**	n/a	
All Sources	**Air fraction**		0.1	0
	Direct ingestion (area source)	**1/h**	0	8.10E-06
	Removable fraction (area source)		0.5	0.2
	Lifetime (area source)		365	3.65E+06
	Radon release fraction (area source)		0.1	0

12-ft wide

2-m high
Uniformly contaminated

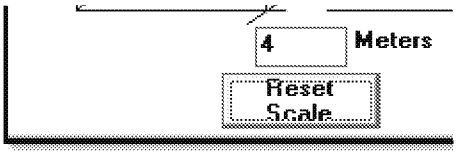

For source mass balance, suppresses pathways other than ingestion and external exposure.

See calculation at right:
HPNS 2006 Action Memorandum
10,000 years to effectively eliminate source dissipation
Eliminates release of radon or thoron (plates out to dust)

Direct Ingestion
RESRAD-Onsite, ANL-EAD-03-1J, Sectic
Receptor exposed 26 y * 365 d/y * 13.
1/123,465 h = 8.1E-06 h-1
This models the entire source being in

x

Close

on J.4.8: the direct ingestion rate should not cause the
01 h/d = 123,465 h

gested in the exposure period

ROC	RG (dpm/100 cm2)	RG (pCi/cm2)
Am-241	100	0.45045045
Co-60	5000	22.52252252
Cs-137+D	5000	22.52252252
Eu-152	5000	22.52252252
Eu-154	5000	22.52252252
H-3	5000	22.52252252
Pu-239	100	0.45045045
Ra-226+D	100	0.45045045
Sr-90+D	1000	4.504504505
Th-232+D	36.5	0.164414414
U-235	488	2.198198198

Ra-226+D modeled with Ra-226, Pb-210 and Po-210 in secular equilbrium
Th-232+D modeled with Th-232, Ra-228 and Th-228 in secular equilbrium

Input (dpm/m2)	Input (pCi/m2)	Ingestion Dose by Source (BUILD Output, mrem)				
		Source 1 (Wall 1)	Source 2 (Wall 2)	Source 3 (Wall 3)	Source 4 (Wall 4)	Source 5 (Floor)
1.00E+04	4.50E+03	5.68	5.68	5.68	5.68	10.40
5.00E+05	2.25E+05	1.89	1.89	1.89	1.89	3.46
5.00E+05	2.25E+05	12.20	12.20	12.20	12.20	22.30
5.00E+05	2.25E+05	1.16	1.16	1.16	1.16	2.12
5.00E+05	2.25E+05	1.35	1.35	1.35	1.35	2.48
5.00E+05	2.25E+05	0.03	0.03	0.03	0.03	0.05
1.00E+04	4.50E+03	7.04	7.04	7.04	7.04	12.90
1.00E+04	4.50E+03	24.50	24.50	24.50	24.50	44.80
1.00E+05	4.50E+04	0.04	0.04	0.04	0.04	0.06
3.65E+03	1.64E+03	17.70	17.70	17.70	17.70	32.30
4.88E+04	2.20E+04	6.60	6.60	6.60	6.60	12.10

Summed Ingestion Dose (mrem)	Ingestion DCF (mrem/pCi, DCFPAK 3.02 Per Capita)
33.12	8.81E-04
11.02	2.03E-05
71.10	4.91E-05
6.76	6.44E-06
7.88	9.66E-06
0.17	1.69E-07
41.06	1.07E-03
142.80	1.68E-03
0.20	1.47E-04
103.10	6.95E-03
38.50	2.03E-04

Estimated Activity (pCi)	Ingestion SF (risk/pCi, DCFPAK 3.02 Soil Population)	Calculated Ingestion Risk
3.76E+04	1.84E-10	6.92E-06
5.43E+05	3.81E-11	2.07E-05
1.45E+06	4.26E-11	6.17E-05
1.05E+06	1.46E-11	1.53E-05
8.16E+05	2.54E-11	2.07E-05
1.01E+06	8.99E-14	9.09E-08
3.84E+04	2.28E-10	8.75E-06
8.50E+04	6.77E-10	5.75E-05
1.39E+03	1.35E-10	1.88E-07
1.48E+04	2.17E-09	3.22E-05
1.90E+05	1.48E-10	2.81E-05

		External Dose by Source (mrem)					
		Source 1 (Wall 1)	Source 2 (Wall 2)	Source 3 (Wall 3)	Source 4 (Wall 4)	Source 5 (Floor)	Summed External Dose (mrem)
		0.014	0.014	0.014	0.014	0.047	0.105
		11.700	11.700	11.700	11.700	38.400	85.200
		7.430	7.430	7.430	7.430	24.300	54.020
		10.900	10.900	10.900	10.900	35.600	79.200
		9.080	9.080	9.080	9.080	29.700	66.020
		0.000	0.000	0.000	0.000	0.000	0.000
		0.000	0.000	0.000	0.000	0.000	0.001
		0.597	0.597	0.597	0.597	1.950	4.338
		0.015	0.015	0.015	0.015	0.049	0.109
		0.300	0.300	0.300	0.300	0.983	2.183
		0.306	0.306	0.306	0.306	1.000	2.224

External DCF (mrem/yr/pCi/cm2, DCFPAK 3.02, ground plane)
2.55E-02
2.69E+00
6.41E-01
1.27E+00
1.37E+00
0.00E+00
3.58E-04
1.95E+00
1.31E-01
9.82E-01
1.74E-01

Estimated Activity Concentration (pCi/cm2)	External SF (risk/yr/pCi/cm2, DCFPAK3.02 ground plane)
4.13	1.87E-08
31.73	2.19E-06
84.27	5.07E-07
62.22	1.03E-06
48.33	1.10E-06
0.00	0.00E+00
2.00	2.06E-10
2.22	1.52E-06
0.83	1.71E-08
2.22	7.67E-07
12.78	1.39E-07

Calculated External Risk	Calculated Total Risk
7.72E-08	6.99E-06
6.95E-05	9.02E-05
4.27E-05	1.04E-04
6.41E-05	7.94E-05
5.32E-05	7.39E-05
0.00E+00	9.09E-08
4.12E-10	8.75E-06
3.38E-06	6.09E-05
1.42E-08	2.02E-07
1.71E-06	3.39E-05
1.78E-06	2.98E-05

ROC	RG (dpm/100 cm2)	RG (pCi/cm2)
Am-241	100	0.45045045
Co-60	5000	22.52252252
Cs-137+D	5000	22.52252252
Eu-152	5000	22.52252252
Eu-154	5000	22.52252252
H-3	5000	22.52252252
Pu-239	100	0.45045045
Ra-226+D	100	0.45045045
Sr-90+D	1000	4.504504505
Th-232+D	36.5	0.164414414
U-235	488	2.198198198

Ra-226+D modeled with Ra-226, Pb-210 and Po-210 in secular equilbrium
Th-232+D modeled with Th-232, Ra-228 and Th-228 in secular equilbrium

Cut summed dose by 5.

Input (dpm/m2)	Input (pCi/m2)	Ingestion Dose by Source (BUILD Output, mrem)				
		Source 1 (Wall 1)	Source 2 (Wall 2)	Source 3 (Wall 3)	Source 4 (Wall 4)	Source 5 (Floor)
1.00E+04	4.50E+03	5.68	5.68	5.68	5.68	10.40
5.00E+05	2.25E+05	1.89	1.89	1.89	1.89	3.46
5.00E+05	2.25E+05	12.20	12.20	12.20	12.20	22.30
5.00E+05	2.25E+05	1.16	1.16	1.16	1.16	2.12
5.00E+05	2.25E+05	1.35	1.35	1.35	1.35	2.48
5.00E+05	2.25E+05	0.03	0.03	0.03	0.03	0.05
1.00E+04	4.50E+03	7.04	7.04	7.04	7.04	12.90
1.00E+04	4.50E+03	24.50	24.50	24.50	24.50	44.80
1.00E+05	4.50E+04	0.04	0.04	0.04	0.04	0.06
3.65E+03	1.64E+03	17.70	17.70	17.70	17.70	32.30
4.88E+04	2.20E+04	6.60	6.60	6.60	6.60	12.10

Summed Ingestion Dose (mrem)	Ingestion DCF (mrem/pCi, DCFPAK 3.02 Per Capita)
6.62	8.81E-04
2.20	2.03E-05
14.22	4.91E-05
1.35	6.44E-06
1.58	9.66E-06
0.03	1.69E-07
8.21	1.07E-03
28.56	1.68E-03
0.04	1.47E-04
20.62	6.95E-03
7.70	2.03E-04

Estimated Activity (pCi)	Ingestion SF (risk/pCi, DCFPAK 3.02 Soil Population)	Calculated Ingestion Risk
7.52E+03	1.84E-10	1.38E-06
1.09E+05	3.81E-11	4.14E-06
2.90E+05	4.26E-11	1.23E-05
2.10E+05	1.46E-11	3.07E-06
1.63E+05	2.54E-11	4.14E-06
2.02E+05	8.99E-14	1.82E-08
7.67E+03	2.28E-10	1.75E-06
1.70E+04	6.77E-10	1.15E-05
2.79E+02	1.35E-10	3.76E-08
2.97E+03	2.17E-09	6.44E-06
3.79E+04	1.48E-10	5.61E-06

	External Dose by Source (mrem)					
	Source 1 (Wall 1)	Source 2 (Wall 2)	Source 3 (Wall 3)	Source 4 (Wall 4)	Source 5 (Floor)	Summed External Dose (mrem)
	0.014	0.014	0.014	0.014	0.047	0.105
	11.700	11.700	11.700	11.700	38.400	85.200
	7.430	7.430	7.430	7.430	24.300	54.020
	10.900	10.900	10.900	10.900	35.600	79.200
	9.080	9.080	9.080	9.080	29.700	66.020
	0.000	0.000	0.000	0.000	0.000	0.000
	0.000	0.000	0.000	0.000	0.000	0.001
	0.597	0.597	0.597	0.597	1.950	4.338
	0.015	0.015	0.015	0.015	0.049	0.109
	0.300	0.300	0.300	0.300	0.983	2.183
	0.306	0.306	0.306	0.306	1.000	2.224

External DCF (mrem/yr/pCi/cm2, DCFPAK 3.02, ground plane)	Estimated Activity Concentration (pCi/cm2)
2.55E-02	4.13
2.69E+00	31.73
6.41E-01	84.27
1.27E+00	62.22
1.37E+00	48.33
0.00E+00	0.00
3.58E-04	2.00
1.95E+00	2.22
1.31E-01	0.83
9.82E-01	2.22
1.74E-01	12.78

External SF (risk/yr/pCi/cm2, DCFPAK3.02 ground plane)	Calculated External Risk	Calculated Total Risk
1.87E-08	7.72E-08	1.46E-06
2.19E-06	6.95E-05	7.36E-05
5.07E-07	4.27E-05	5.51E-05
1.03E-06	6.41E-05	6.71E-05
1.10E-06	5.32E-05	5.73E-05
0.00E+00	0.00E+00	1.82E-08
2.06E-10	4.12E-10	1.75E-06
1.52E-06	3.38E-06	1.49E-05
1.71E-08	1.42E-08	5.18E-08
7.67E-07	1.71E-06	8.14E-06
1.39E-07	1.78E-06	7.39E-06