CARBONATOR™ 500

Mobile Carbonizer

ROI's Revolutionary Carbon Negative Solution to Cost Effective Conversion of Wood Debris to...

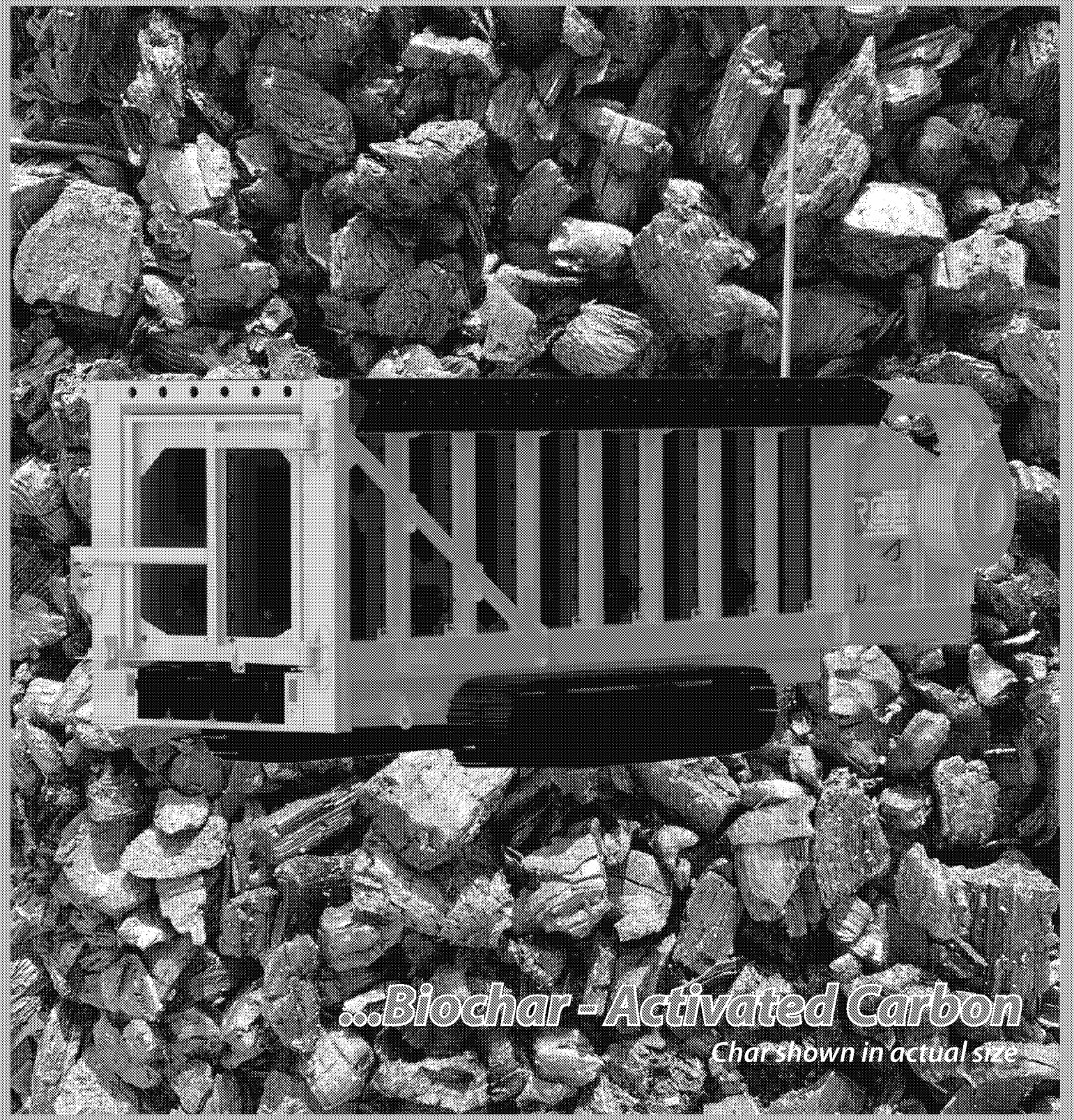

CARBONATOR™ 500

Mobile Carbonizer

The Future of Wood and Vegetative Debris Conversion

The mobile and stationary CARBONATOR is the most advanced, cost-effective and environment- friendly wood debris conversion system ever built. Wood and other suitable biomass is converted into a high-quality biochar at high throughput rates, utilizing the biomass as its own fuel source for Carbonizing. Designed to accept trees, brush, stumps and other wood debris without grinding or chipping.

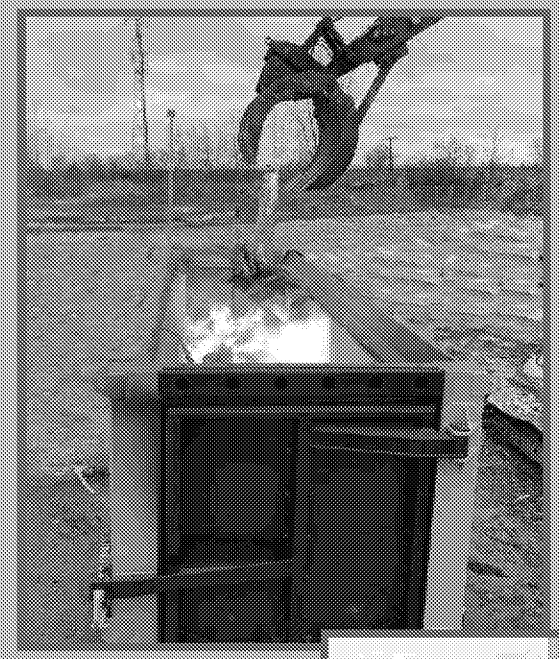

Large Open Feed Area

CARBONATOR Benefits

- The wood and vegetative debris are the fuel supply for the carbonizing process.
- Designed to provide the largest transportable mobile machine for high sustainable processing capacity and superior end product.
- Track mounted to allow for direct re-introduction of high-quality biochar to forest or agricultural land where conversion is taking place.
- Designed to be easily moved on common lowboy trailers.
- Pre-heated under chamber air for maximum conversion efficiency.
- Live stream video monitoring of carbonizing chamber providing operator full visibility for ease of feeding.
- Extremely low operating cost, simple and easy single person operation.
- Eliminates processing, transportation and disposal costs.
- A natural process that converts biomass into a high-quality product.

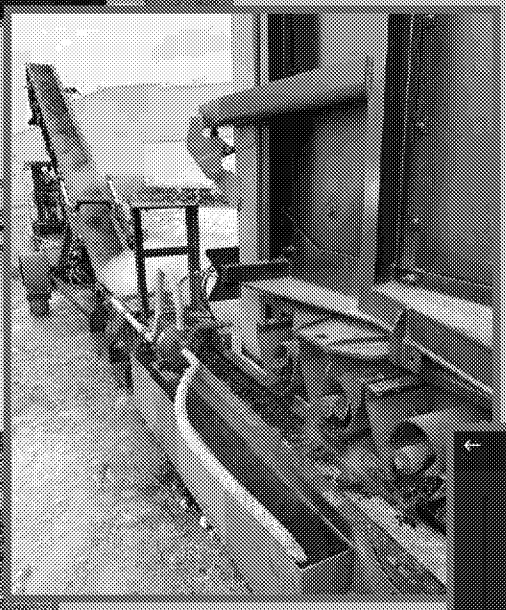

Char Conveyor with Metal Separation

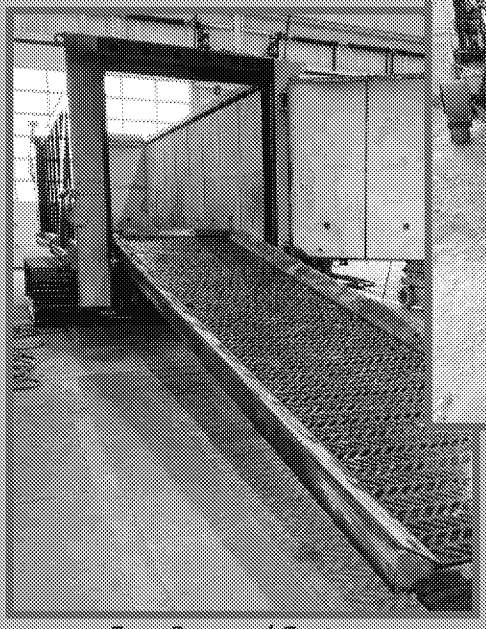

Easy Removal Grate

Live Stream Video Monitoring

CARBONATOR™ 500

Mobile Carbonizer

ROI's team spent the last few years designing and constructing the carbonizer line of equipment to address the challenges associated with reducing the carbon process footprint from commonly accepted, but in reality, poor management of wood debris.

ROI's patent pending Carbon Negative Process is the only available Single-Step recycling system that reduces the processing carbon footprint to less than neutral, having a net effect of removing CO_2e emissions from the atmosphere. All other available processes add CO_2e emissions, some much more significant than others.

The CARBONATOR 500's carbon negative technology properly reduces volume by approximately 90% while recycling debris into a valuable high grade Activated Carbon or Biochar, based on the customers desired material outcome.

Carbon Process Footprint Comparisons:

When wood and vegetation is converted to biochar utilizing the CARBONATOR 500 the process footprint is **NEGATIVE**, 240-330lb of Atmospheric CO_2e is **reduced** per ton of carbonized debris.
PM: 1-2lb./ton

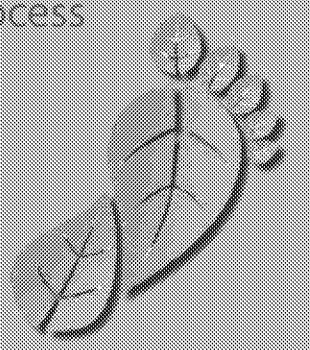

When wood and vegetation is turned in to compost, the Carbon Process Footprint is **Positive**, 2,000-2300lb of Atmospheric CO_2e is **added** per ton of composted debris.
PM: 15-20lb./ton

When wood and vegetation is turned in to mulch, the Carbon Process Footprint is **Positive**, 2,000-2300lb of Atmospheric CO_2e is **added** per ton of mulch produced.
PM: 30-40lb./ton

When wood and vegetation is turned in to and used for fuel for heat/electric generation, the Carbon Process Footprint is **Positive**, 50-100lb of Atmospheric CO_2e is **added** per ton of combusted fuel.
PM: 15-20lb./ton

When wood and vegetation is landfilled while used as daily cover, the Carbon Process Footprint is **Positive**, 2,000-2100lb of Atmospheric CO_2e is **added** per ton of raw material processed and deposited.
PM: 15-20lb./ton

When wood and vegetation is directly landfilled, the Carbon Process Footprint is **Positive**, 1,900-2050 lb. of Atmospheric CO_2e is **added** per ton of deposited material.
PM: 2-3lb./ton

*The above emissions values were calculated using published data from the US EPA and other sources.

Biochar Benefits

Biochar is the solid product remaining after the biomass is carbonized. Biochar is characterized by high porosity and a high-specific surface area. The porosity and surface area give biochar very favorable properties for adsorption of toxic substances and soil rehabilitation. Biochar sequesters carbon for thousands of years and is resistant to the microbial breakdown that is common with other types of organic matter.

Biochar has many uses, a few notable applications include, Micro-filters, Carbon fertilizer, Compost additive, Substitute for peat in potting soil, Plant protection, and a process to reduce particulate, Carbon Dioxide (CO_2), Methane (CH_4) and Nitrous Oxides (NO_x) emissions from other biomass processes.

CARBONATOR™ 500

Mobile Carbonizer

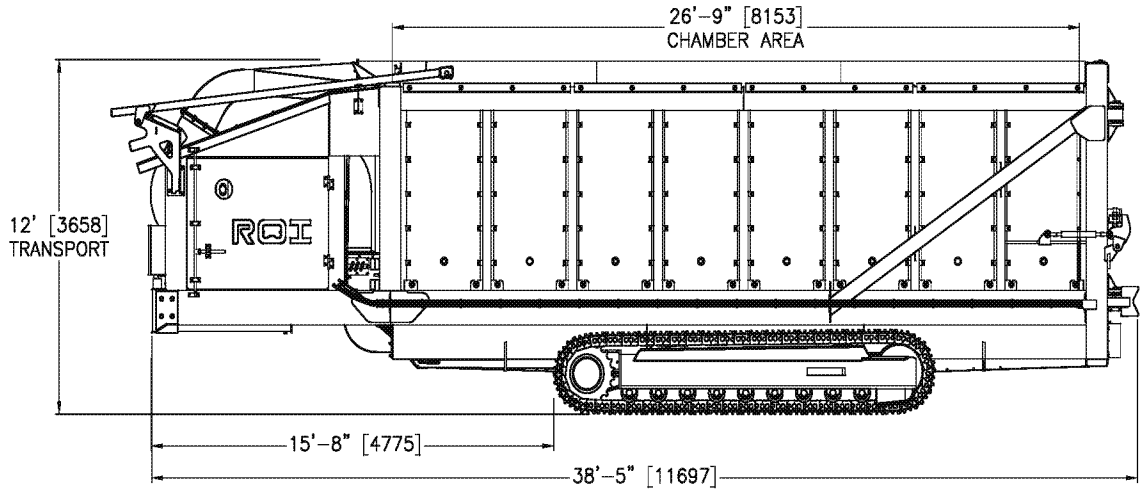

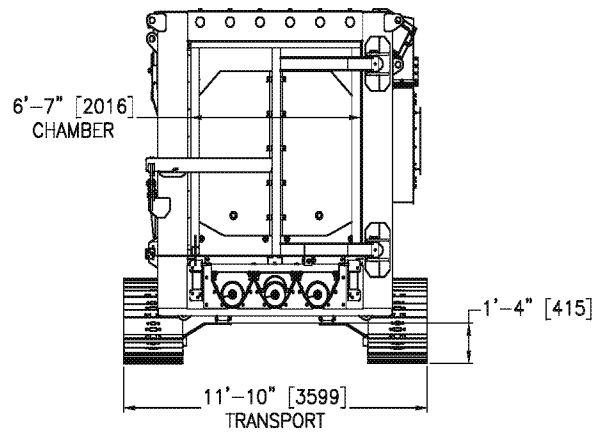

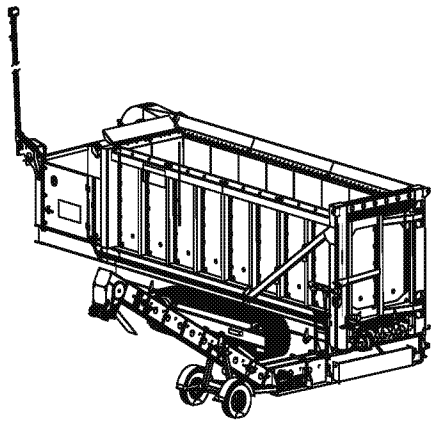

Patent Pending

CARBONATOR 500 Specifications:

Thermo-Ceramic Panels:
Bolt in easily replaceable panels rated to 1650 degrees C. (3000 degrees F.)

Blower:
Two hydrostatic driven blowers for maximum carbonizing control and efficiency.

Engine:
Caterpillar tier 2 / tier 4 (124-148hp.)

Tracks:
Berco B5 with two speed motors, 700mm (27.5") wide track pads.

Hydraulic System:
High pressure hydrostatic and open loop piston pumps for blowers and all other functions. 250 liter (55gallon) oil reservoir, oil cooler.

Char Handling System:
One rear carbonizing chamber access door. Three horizontal biochar augers that discharge out the rear of machine. Air cooled char troughs with water injection nozzles for instant quenching of char. Quick interchangeable grates for various size biochar and easy clean out of non-combustibles.

Electrical System:
IOAN PLC with radio remote control for all functions. Camera mounted on hydraulically operated arm to stream video to monitor in cab of machine feeding.

Total Weight:
39643-41500Kg (87400-91300lbs.)

Fuel Tank:
465 Liters (123 gallons)

Optional:
Heat exchanger for water or oil, ORC electric generating module, Automatic propane ignition system, available stationary with electric drives.

ROI
Radical / Original Innovation

P.O. Box 348 Chester, NH 03036
Phone: (603) 244-7091 www.roi-equipment.com