EPA Certification Test Report

The following models are EPA certified under the following attached test report:	**F1150/i1150**
	Model #
Wood Stoves	F1150
Wood Inserts	i1150
Wood Fireplaces	N/A
Pellet Stoves	N/A
Pellet Inserts	N/A

Full US Environmental Protection Agency ("EPA") certification test reports have been reported to the EPA. Test reports may contain sensitive, confidential business information which has been specifically excluded and/or redacted from this publicly posted test report.

© FPI FIREPLACE PRODUCTS INTERNATIONAL LTD
Published November 14, 2019
E&OE

Fireplace Products International, Ltd.

Project # 19-496
Model: F1150
AKA: I1150
Type: Wood-Fired Room Heater
August 14, 2019

ASTM E3053 Standard Test Method for Determining Particulate Matter Emissions from Wood Heaters Using Cordwood Test Fuel (EPA ALT-125)

Contact: Mr. Julian Mills
6988 Venture Street
Delta, BC VG4 1H4
jmills@regency-fire.com
(604)-946-5155

Prepared by: Sebastian Button,
Laboratory Supervisor

11785 SE Highway 212 – Suite 305
Clackamas, OR 97015-9050
(503) 650-0088
WWW.PFSTECO.COM

This page intentionally left blank.

Contents

Affidavit 3
Introduction 4
Notes 4
Wood Heater Identification and Testing 5
Test Procedures and Equipment 6
Results 7
Summary Table 7
Test Run Narrative 8
Run 1 8
Run 2 8
Run 3 8
Test Conditions Summary 9
Appliance Operation and Test Settings 9
Settings & Run Notes 9
Appliance Description 10
Appliance Dimensions 10
Test Fuel Properties 13
Sampling Locations and Descriptions 14
Sample Points 14
Sampling Methods 15
Analytical Methods Description 15
Calibration, Quality Control and Assurances 15
Appliance Sealing and Storage 15
Sealing Label 15
Sealed Unit 16
List of Appendices 17

ED_005996_00000513-00004

Affidavit

PFS-TECO was contracted by Fireplace Products International Ltd. (FPI) to provide testing services for the F1150 Wood-Fired Room Heater per ASTM E3053, *Standard Test Method for Determining Particulate Matter Emissions from Wood Heaters Using Cordwood Test Fuel*, which was approved for use under EPA ALT-125. All testing and associated procedures were conducted at PFS-TECO's Portland Laboratory beginning on 7/22/2019 and ending on 7/24/2019. PFS-TECO's Portland Laboratory is located at 11785 SE Highway 212 – Suite 305, Clackamas, Oregon 97015. Testing procedures followed ASTM E3053, with variances as described in EPA ALT-125. Particulate sampling was performed per ASTM E2515, *Standard Test Method for Determination of Particulate Matter Emissions Collected by a Dilution Tunnel,* with the exception of caveats described in EPA ALT-125. A copy of EPA ALT-125 is included in Appendix A for reference, as required by the approval letter.

PFS-TECO is accredited by the U.S. Environmental Protection Agency for the certification and auditing of wood heaters pursuant to subpart AAA of 40 CFR Part 60, New Source Performance Standards for Residential Wood Heaters and subpart QQQQ of 40 CFR Part 60, Standards of Performance for New Hydronic Heaters and Forced Air Furnaces, Methods 28R, 28WHH, 28 WHH-PTS, and all methods listed in Sections 60.534 and 60.5476. PFS-TECO holds EPA Accreditation Certificate Numbers 4 and 4M (mobile). PFS-TECO is accredited by IAS to ISO 17020:2012 "Criteria for Bodies Performing Inspections", and ISO 17025:2005 "Requirements for Testing Laboratories." PFS-TECO is also accredited by Standards Council of Canada to ISO 17065:2012 "Requirements for Bodies Operating Product Certification Systems."

The following people were associated with the testing, analysis and report writing associated with this project.

Sebastian Button, Laboratory Supervisor

Introduction

FPI-Regency Fireplaces Products of Delta, BC, contracted with PFS-TECO to perform EPA certification testing on F1150 Wood-Fired Room Heater. All testing was performed at PFS-TECO's Portland Laboratory. All testing was performed by Sebastian Button.

Notes

- Prior to start of testing, 50 hours of conditioning was performed per ASTM E3053.
- Prior to start of testing, the dilution tunnel was cleaned with a steel brush.
- Front filters were changed on sample train A at one hour for all 3 test runs.
- A total of 3 test runs were completed. Test runs were performed in accordance with ASTM E3053. For the three test runs used in the weighted average, no anomalies occurred. See the Run Narrative section for further detail on each run.

ED_005996_00000513-00006

Wood Heater Identification and Testing

- Appliance Tested: ***F1150***
- Serial Number: ***Un-serialized Prototype – PFS Tracking Number 0031***
- Manufacturer*:* ***FPI-Regency Fireplace Products***
- Catalyst: ***No***
- Heat exchange blower: ***Integral***
- Type: ***Wood Stove***
- Style: ***Free Standing***
- Date Received: ***Thursday, July 18, 2019***
- Testing Period – Start: ***Monday, July 22, 2019***
  Finish: ***Wednesday, July 24, 2019***
- Test Location: ***PFS-TECO Portland Laboratory***
  11785 SE HWY 212 - Suite 305, Clackamas, OR 97015
- Elevation: ***~131 Feet above sea level***
- Test Technician(s): ***Sebastian Button***

Test Procedures and Equipment

All Sampling and analytical procedures were performed by Sebastian Button. All procedures used are directly from ASTM E3053 and ASTM E2515. See the list below for equipment used. See Appendix C submitted with this report for calibration data.

Equipment List:

Equipment ID#	Equipment Description
041	Rice Lake 3'x3' floor scale w/digital weight indicator
050	Digiweigh DWP12i Platform Scale
053	APEX XC-60 Digital Emissions Sampling Box A
054	APEX XC-60 Digital Emissions Sampling Box B
055	APEX Ambient sampling box
057	California Analytical ZRE CO2/CO/O2 IR ANALYZER
064	Digital Barometer
109A/B	Troemner 100mg/200mg Audit Weights
107	Sartorius Analytical Balance
051	10 lb audit weight
090	Dewalt Tape Measure
092	Digital Calipers
095	Anemometer
111	Microtector
115	Delmhorst Wood Moisture Meter
SA17187	Gas Analyzer Calibration Span Gas
CC170624	Gas Analyzer Calibration Mid Gas

Results

The weighted average emissions rate for the 3 run test series was measured to be **1.71 g/hr** with a Higher Heating Value efficiency of **70.3%.** The average CO emission rate for the 3 tests was **1.40 g/min.** The FPI F1150 Wood-Fired Room Heater meets the 2020 cordwood PM emission standard of ≤ 2.5 g/hr per CFR 40 part 60, §60.532 (c).

Detailed individual run data can be found in Appendix A submitted with this report.

Summary Table

	High Fire Test	Low Fire Test	Medium Fire Test
Date	7/22/2019	7/23/2019	7/24/2019
Run Number	1	2	3
PM Emission Rate (g/hr)	3.92	0.92	1.39
Burn Rate (kg/hr)	2.86	0.94	1.19
Heat Output (BTU/hr)	39,101	12,777	15,942
HHV Efficiency (%)	67.9%	71.3%	70.5%
LHV Efficiency (%)	72.6%	76.3%	75.4%
CO Emissions (g/MJ output)	2.97	4.14	4.37
CO Emissions (g/kg dry fuel)	40.27	58.87	61.52
CO Emissions (g/min)	2.04	0.93	1.22
1st Hour Emission Rate (g/hr)	4.45	2.55	3.64
Weighting Factor (%)	20%	40%	40%
Weighted particulate emission average of 3 test runs: 1.71 grams per hour.			
Weighted average HHV efficiency of 3 test runs: 70.3%.			
Average CO emission rate for 3 test runs: 1.40 grams per minute			

Test Run Narrative

Run 1

Run 1 was performed on 7/22/2019 as a high fire test run per ASTM E3053. Emissions sampling began from a cold start ignition of kindling and start-up fuel. The test fuel load was loaded 32 minutes into the test. Testing was completed when 90% of the test fuel load was consumed. Total test time was 98 minutes, main test fuel load burn time was 66 min. The particulate emissions rate from kindling ignition to test completion was 3.92 g/hr. The burn rate of the test fuel load was 2.86 kg/hr. The main test load portion of the run had an overall HHV efficiency of 67.9%. The train A front filter was changed at 1 hr. All test results were appropriate and valid. There were no anomalies and all test criteria were met.

Run 2

Run 2 was performed on 7/23/2019 as a low fire test run per ASTM E3053. The overall test duration was 284 minutes. The burn rate for the test run was 0.94 kg/hr. The particulate emissions rate for the test run was 0.92 g/hr. The run had an overall HHV efficiency of 71.3%. The train A front filter was changed at 1 hr. All test results were appropriate and valid. There were no anomalies and all test criteria were met.

Run 3

Run 3 was performed on 7/24/2019 as a medium fire test run per ASTM E3053. The overall test duration was 223 minutes. The burn rate for the test run was 1.19 kg/hr, therefore the medium fire category requirements were met, less than the mid-point of the high and low burn rates (1.90 kg/hr). The particulate emissions rate for the test run was 1.39 g/hr. The run had an overall HHV efficiency of 70.5%. The train A front filter was changed at 1 hr. There were no anomalies and all criteria were met.

Test Conditions Summary

Testing conditions for all runs fell within allowable specifications of ASTM E3053 and ASTM E2515. A summary of facility conditions, fuel burned, and run times is listed below.

Runs	Ambient (°F)		Relative Humidity (%)		Average Barometric Pressure (In. Hg.)	Preburn Fuel Weight (lbs)	Test Fuel Weight (lbs)	Test Fuel Moisture (%DB)	Test Run Time (Min)
	Pre	Post	Pre	Post					
1	76	83	36.6	31.4	29.95	4.06[1]	9.57	22.1%	98[2]
2	77	79	44.5	31.9	29.99	9.51	11.96	21.5%	284
3	77	78	38.1	27.5	30.13	9.5	11.81	20.7%	223

[1]This is the weight of the kindling and startup fuel

[2]Total test time was 98 min, high fire test load burn duration was 66 min.

Appliance Operation and Test Settings

The appliance was operated according to procedures as described in the Operations Manual, found in Appendix B submitted with this report. Detailed run information can be found in Appendix A submitted with this report.

Settings & Run Notes

	Pre-Burn Air Setting	Test Run Air and Fan Settings
Run 1	N/A – Cold Start Ignition	Air control set to high fire test setting, blower off for first 15 min, then set to high.
Run 2	Air control set to High Fire Setting in accordance with ASTM E3053	Air control set to low fire test setting, blower off for first 15 min, then set to low.
Run 4	Air control set to High Fire Setting in accordance with ASTM E3053	Air control set to medium fire test setting, blower off for first 15 min, then set to low.

Appliance Description

Model(s): F1150

Additional Models Discussion: In addition to the tested model, this design is offered as the I1150. The difference between the two models is that the F1150 is a free-standing design, while the I1150 is designed to be a fireplace insert. Both models use an identical design in all aspects that may affect emissions or air control and are presumed to have the same emissions performance as the test specimen provided for certification.

Appliance Type: Wood-Fired Room Heater

Firebox Volume: 0.98 ft^3

Air Introduction System: Primary Air enters the firebox from the front bottom of the appliance and is channeled up the sides on the appliance and down through the air wash, as well as through a pilot air opening in the front of the firebox. Primary air is controlled via a damper arm located below the ashlip which moves left (open) to right (closed). Secondary air is pulled through a fixed opening in to rear bottom of the appliance and channeled up through 3 secondary air tubes. Dimensions on all these features can be found in Appendix D.

Baffles: A 9.50" x 16.0" x 0.50" vermiculite panel rests on top of the secondary air tubes.

Refractory Insulation: The firebox is lined with 1" thick firebrick.

Flue Outlet: 6-inch exhaust outlet located on the top of the appliance.

Catalytic Combustor: N/A

Fan: The F1150 is equipped from the factory with a convection fan that attached to the rear of the appliance.

Appliance Dimensions

F1150 Unit Dimensions

Height	Width	Depth	Firebox Volume
32"	24"	17.5"	0.98 ft^3

Appliance design drawings can be found in Appendix D submitted with the CBI copy of this report.

Appliance Front

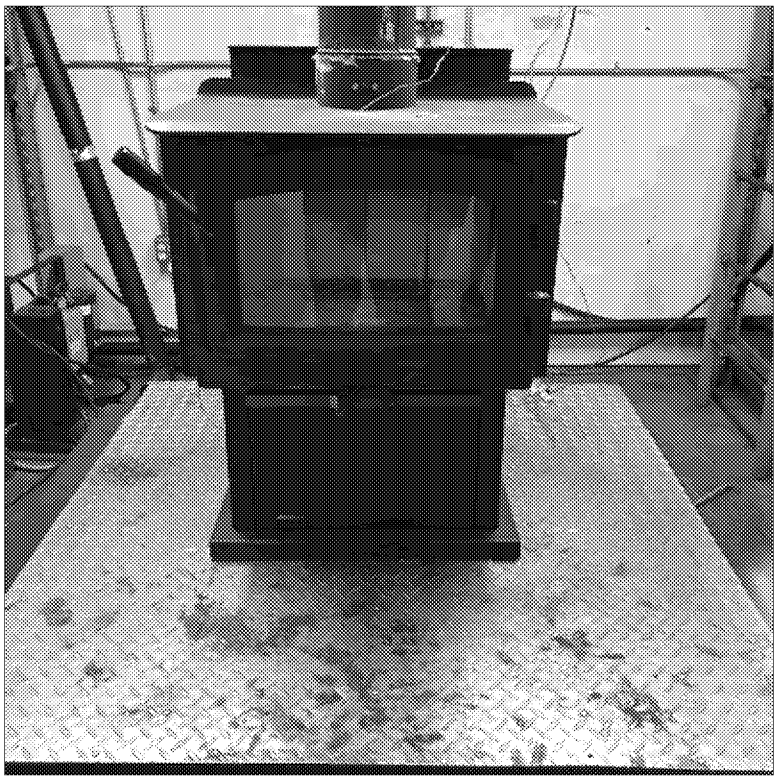

Appliance Left

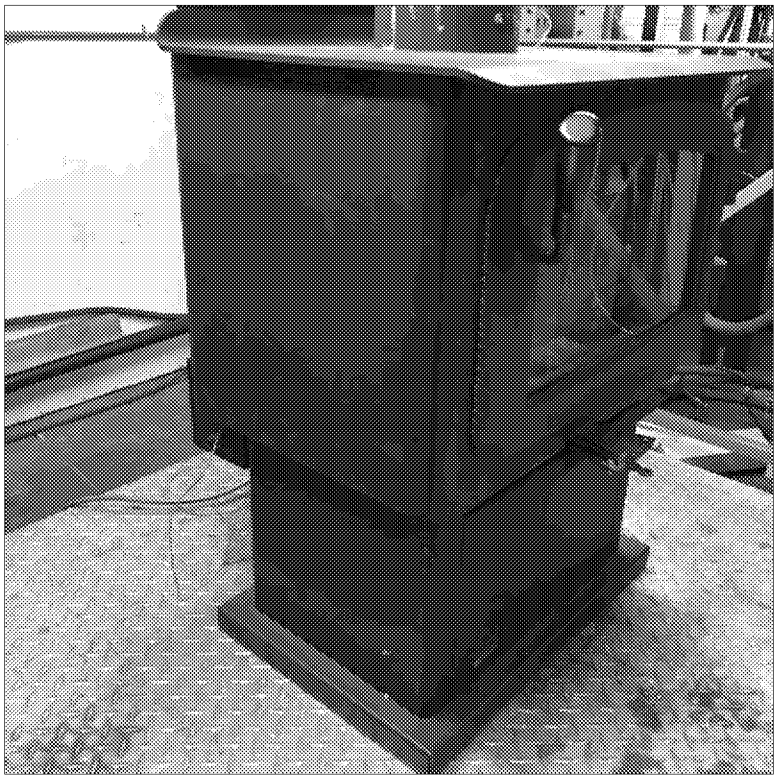

Appliance Right

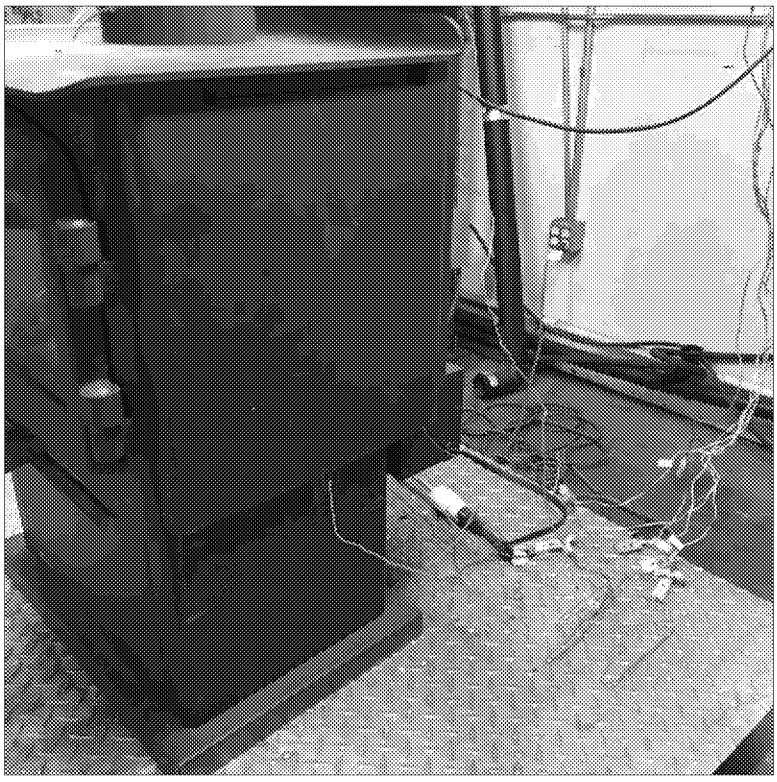

Appliance Rear

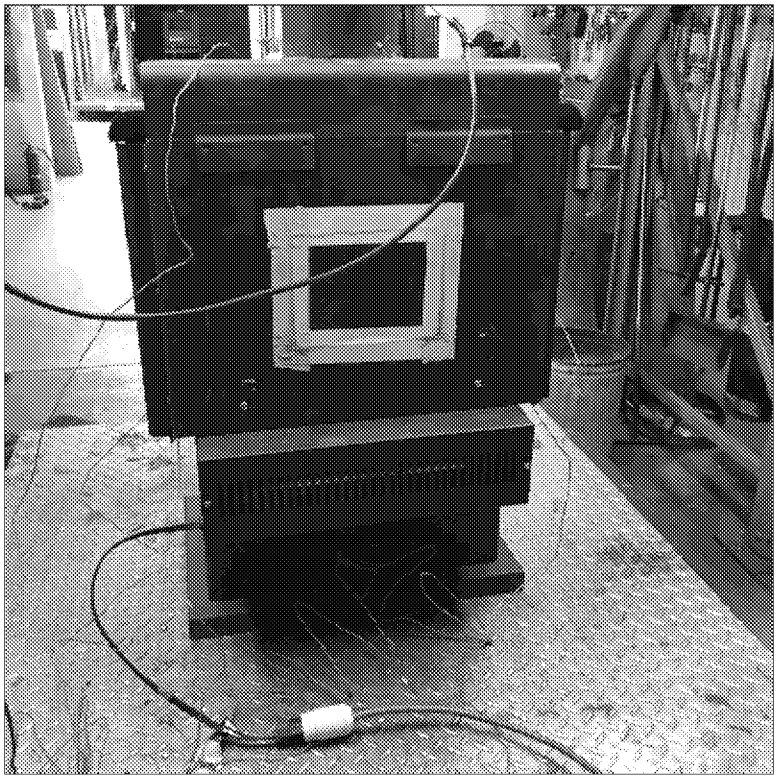

Test Fuel Properties

Test fuel used was Maple cordwood, split and air-dried to the specified moisture content range. Typical fuel loads are pictured below:

Typical Kindling Load

Typical Startup Load

Typical High Fire Load

Typical Low Fire Load

Sampling Locations and Descriptions

Sample ports are located 16.5 feet downstream from any disturbances and 1 foot upstream from any disturbances. Flow rate traverse data was collected 12 feet downstream from any disturbances and 5.5 feet upstream from any disturbances. (See below).

Sample Points

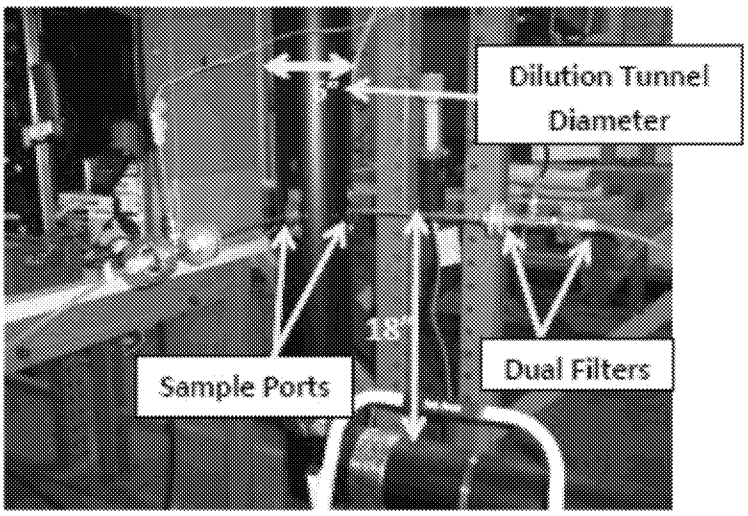

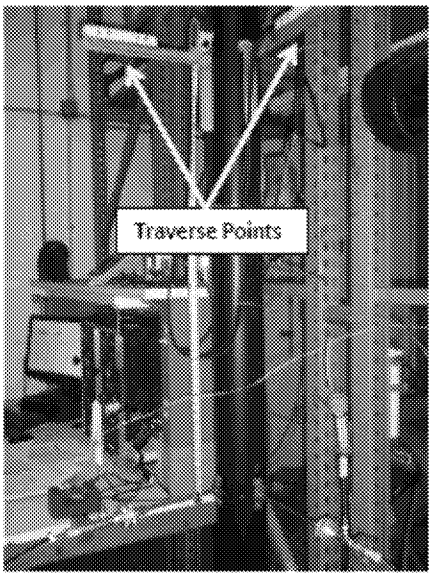

Sampling Methods

ASTM E2515 was used in collecting particulate samples. The dilution tunnel is 6 inches in diameter. All sampling conditions per ASTM E2515 were followed. No alternate procedures were used with the exception of caveats described in ALT-125: Pall TX40 Emfab filters were used, filter temperatures were maintained between 80 and 90°F for all tests, filters were weighed in pairs where applicable, and no sampling intervals fell outside of proportional rates of +/- 10%.

Analytical Methods Description

All sample recovery and analysis procedures followed ASTM E2515 procedures. At the end of each test run, filters, O-Rings and probes were removed from their housings, dessicated for a minimum of 24 hours, and then weighed at 6 hour intervals to a constant weight per ASTM E2515-11 Section 10.

Calibration, Quality Control and Assurances

Calibration procedures and results were conducted per EPA Method 28R, ASTM E2515-11 and ASTM E3053. Test method quality control procedures (leak checks, volume meter checks, stratification checks, proportionality results) followed the procedures outlined.

Appliance Sealing and Storage

Upon completion of testing, the appliance was secured with metal strapping and the seal below was applied, the appliance was then returned to the manufacturer's location at: 6988 Venture St, Delta, BC V4G 1H4, Canada, for archival.

Sealing Label

ATTENTION:

THIS SEAL IS NOT TO BE BROKEN WITHOUT PRIOR AUTHORIZATION FROM THE UNITED STATES ENVIRONMENTAL PROTECTION AGENCY.

THIS APPLIANCE HAS BEEN SEALED INACCORDANCE WITH REQUIREMNTS OF 40CFR PART 60 SUBPART AAA §60.535 (a)(2)(vii)

REPORT #_____ DATE SEALED_____

MANUFACTURER_____ MODEL #_____

Sealed Unit

List of Appendices

The following appendices have been submitted electronically in conjunction with this report:

Appendix A – Test Run Data, Technician Notes, Sample Analysis, and Alternate Test Method Approval

Appendix B – Labels and Manuals

Appendix C –Equipment Calibration Records

Appendix D – Design Drawings (CBI Report Only)

Appendix E – Manufacturer QAP (CBI Report Only)

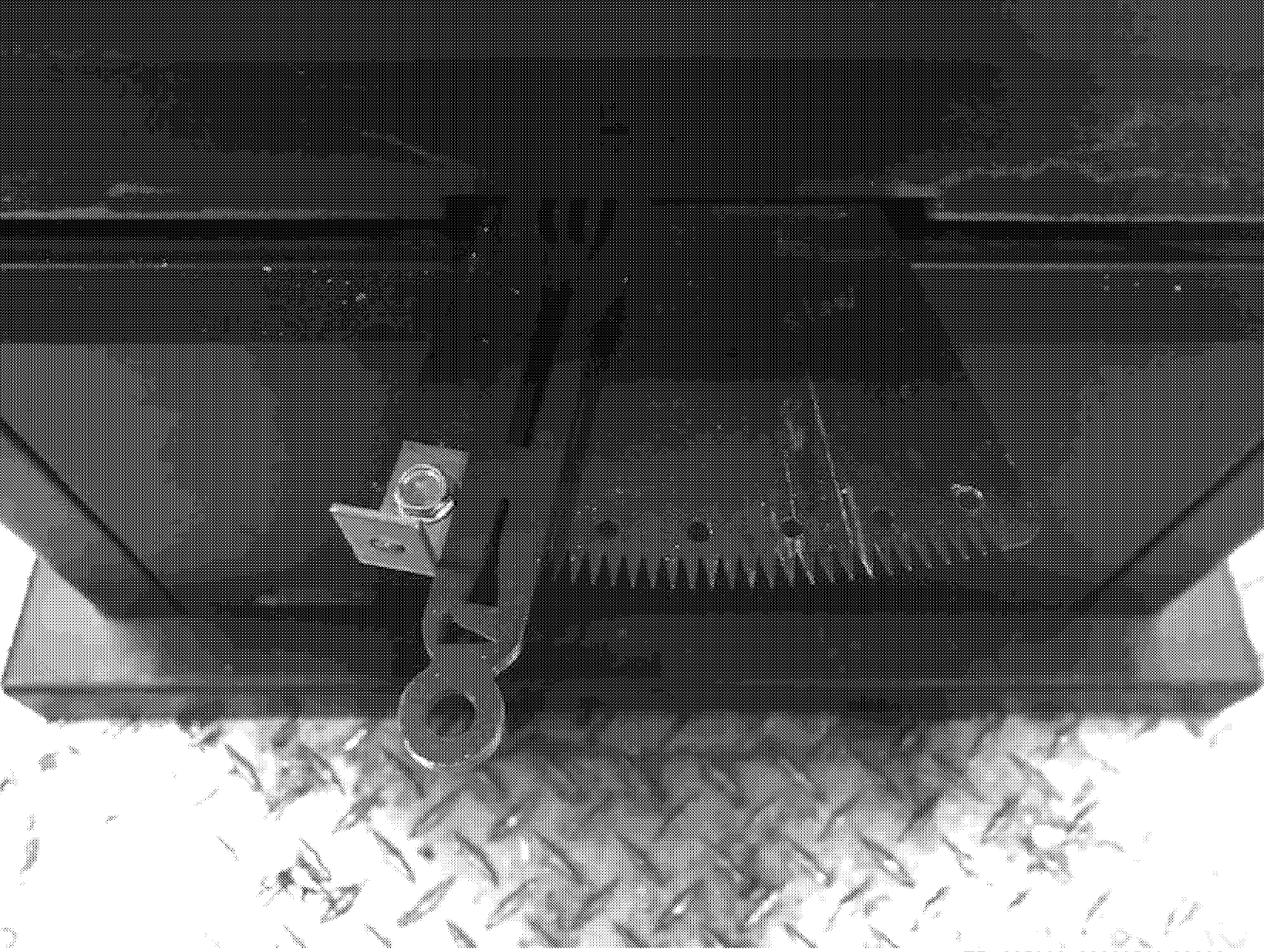

ED_005996_00000513-00020

8

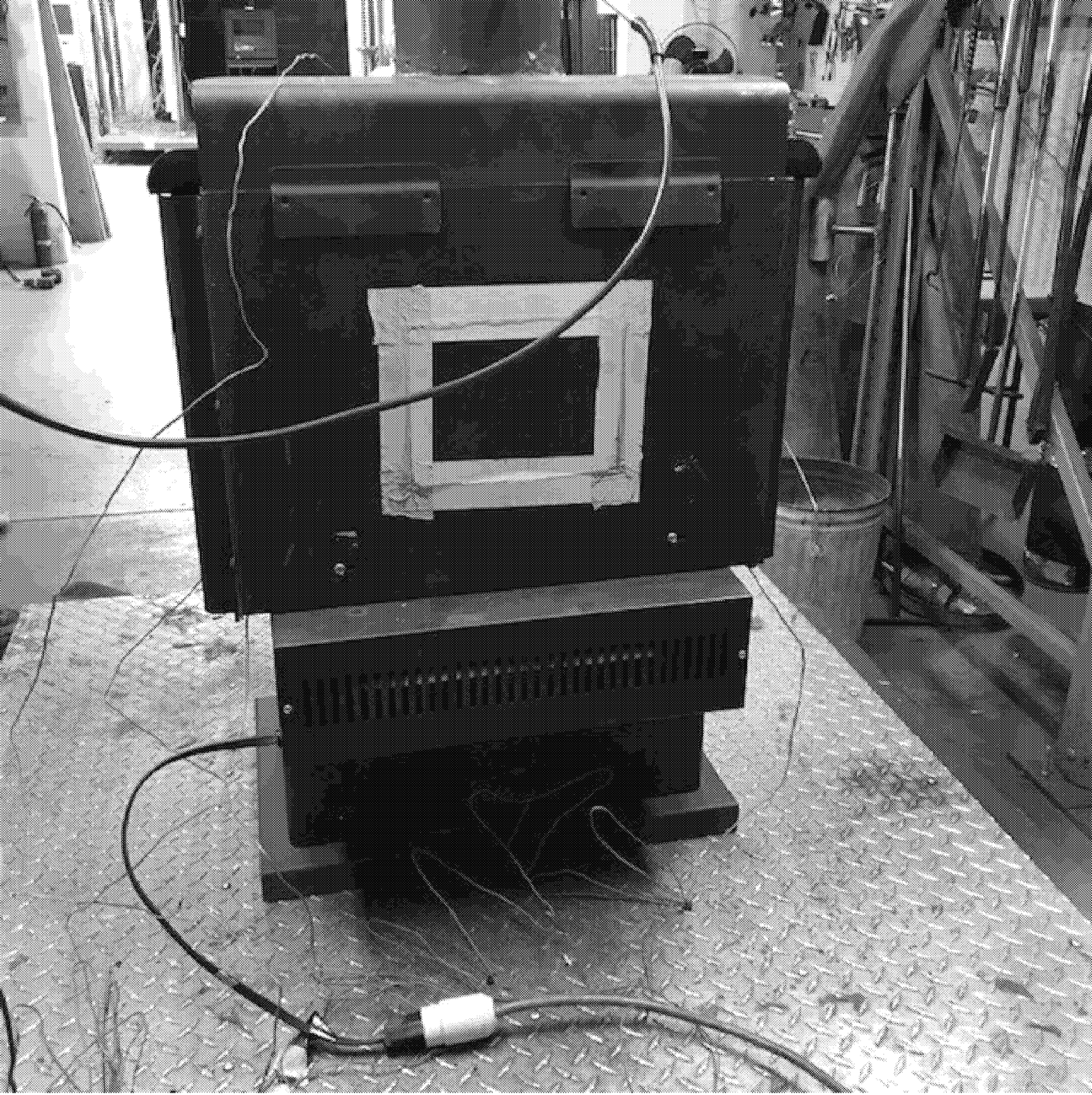

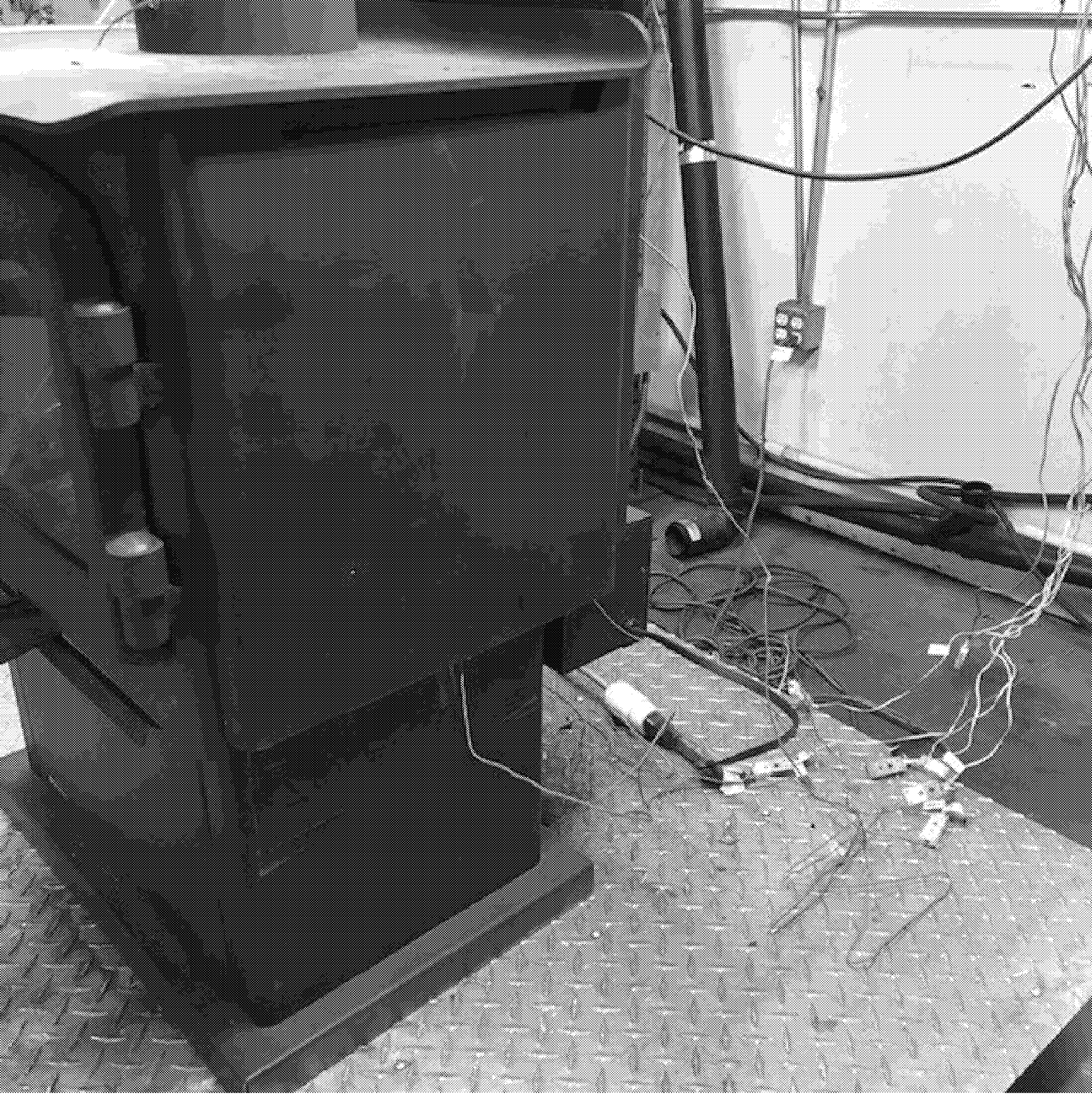

WOOD HEATER TESTING SUMMARY

SECTION 1 – Model Identification	
Model Name(s)/Number(s)	F1150 / I1150
Manufacturer	FPI - Regency Fireplaces Products
Address 1	6988 Venture St.
Address 2	Delta, BC V4G 1H4
Appliance Category(s) (Free-standing, Insert, etc.)	Fireplace Insert
Usable Firebox Volume - ft^3	0.98
Catalytic/Non-Cat	Non-Cat
Convection Air Fan (No, Standard, Optional)	Optional

SECTION 1B – Laboratory Information	
Testing Laboratory	PFS-TECO
Address 1	11785 SE Hwy 212 Ste 305
Address 2	Clackamas, OR 97015
ISO/Accreditation Info	ISO 17025
Dates Tested	7/22/2019 - 7/24/2019
Test Methods/Standards	ASTM E3053 (ALT-125), ASTM E2515
Dilution Tunnel Inside Diameter - in.	6.00
Filter Diameter - mm	47
Filter Material	Pall Type TX40

SECTION 2 – Test Conditions Summary

Test Run #	1	2	3	
Date Tested	7/22/2019	7/23/2019	7/24/2019	
Test Run Category (L, M, H)	High Fire	Low Fire	Medium Fire	
Average Barometric Pressure - in Hg	29.95	29.99	30.13	
Max. Observed Ambient Temp - °F	84	80	80	
Min. Observed Ambient Temp - °F	76	76	76	
Max. Observed Filter Temp - °F	87	87	86	
Test Fuel Load				
Cordwood Fuel Species	Maple, Hard	Maple, Hard	Maple, Hard	
Specific Gravity (from Table 1)	0.6	0.6	0.6	
Higher Heating Value - Btu/lb (from Annex A1)	8587	8587	8587	
Nom. Test Fuel Load Piece Length - in.	17	17	17	
Number of Test Fuel Pieces	5	5	5	
Test Fuel Weight				
Kindling - As Fired lb	1.54	N/A	N/A	
Kindling Wt. - As % of Test Fuel Load	16%	N/A	N/A	
Kindling Moisture - % DB	10%	N/A	N/A	
Kindling - kg DB	0.64	N/A	N/A	
SU Fuel - As Fired lb	2.52	N/A	N/A	
SU Fuel Wt. - As % of Test Fuel Load	26%	N/A	N/A	
SU Fuel Moisture - % DB	22%	N/A	N/A	
SU Fuel - kg DB	0.94	N/A	N/A	
Test Fuel Load - As Fired lb	9.57	11.96	11.81	
Ave. Test Fuel Load MC % DB	22.1%	21.5%	20.7%	
Test Fuel Load - kg DB	3.56	4.46	4.44	
Test Fuel Loading Density - lb/ft3	9.77	12.20	12.05	
Residual SU Fuel Wt. - As Fired lb	1.10	N/A	N/A	
Residual SU Fuel Wt. - As % of Test Fuel Load	11%	N/A	N/A	
Test Run Duration - minutes	98	284	223	
Test Run Duration - h	1.63	4.73	3.72	
Run Duration of High Fire Load Only - minutes	66	N/A	N/A	
Run Duration of High Fire Load Only - h	1.10	N/A	N/A	
Test Fuel Load Wt. at End of Test - As Fired lb	0.9	0	0	
Total Fuel Burned - kg DB	4.22	4.46	4.44	
% Test Fuel Load Wt. at End of Test	9.4%	0.0%	0.0%	

SECTION 3 – Test Run Results Summary

Test Run #	1	2	3	
Date Tested	7/22/19	7/23/19	7/24/19	
Test Run Category	High Fire	Low Fire	Medium Fire	
Burn Rate - kg/h DB	2.86	0.94	1.19	
Heat Output - Btu/h	39,101	12,777	15,942	
Average Dilution Tunnel Flow Rate - dscfm	187.21	191.70	192.69	
Average Sample Flow Rates - dscfm				
Train 1	0.147	0.149	0.150	
Train 2	0.144	0.148	0.146	
Total PM Emissions - g				
Train 1	6.01	4.35	5.50	
Train 2	6.80	4.38	4.85	
Average	6.405	4.366	5.174	
PM Emission Train Precision - %	6.2%	0.4%	6.3%	
PM Emission Train Precision - g/kg	0.09	0.00	0.07	
PM Emission Rate - g/h	3.92	0.92	1.39	
Total CO Emissions - g	135	264	273	
CO Emissions Rate - g/h	122	56	73	
Overall Efficiency - CSA B415.1-10				
% HHV Basis	68%	71%	71%	
% LHV Basis	73%	76%	75%	

SECTION 4 - Weighted Average Summary

Test Run Category	High Fire	Low Fire	Medium Fire
Burn Rate - kg/h DB	2.86	0.94	1.19
PM Emission Rate - g/h	3.92	0.92	1.39
CO Emissions Rate - g/h	122.5	55.7	73.4
Overall Efficiency - CSA B415.1-10			
% HHV Basis	68%	71%	71%
% LHV Basis	73%	76%	75%
Heat Output - Btu/h	39100	12800	15900
Category Weighting	20%	40%	40%

ASTM E 3053 Weighted Averages			
PM Emission Rate - g/h	1.7		
CO Emissions Rate - g/h (Arithmetic Average)	83.9		
CO Emissions Rate - g/min (Arithmetic Average)	1.4		
Overall Efficiency - CSA B415.1-10			
% HHV Basis	70%		
% LHV Basis	75%		
Heat Output Range - Btu/h	12800	to	39100

Conditioning Data

Client:	FPI	Job #:	19-496
Model:	F1150	Tracking #:	0031
Date(s):		Technician:	SJB

		Average:	300.2	78.7	N/A
Elapsed Time (hrs)	**Scale Reading (lbs)**	**Weight Change (lbs)**	**Flue (°F)**	**Ambient (°F)**	**Catalyst Exit (°F)**
0	15.8	-	412	78	N/A
1	10.7	-5.1	206	79	N/A
2	5.7	-5.0	255	79	N/A
3	2.3	-3.4	241	78	N/A
4	0.5	-1.8	207	78	N/A
5	7.1	6.6	410	79	N/A
6	2.8	-4.3	314	78	N/A
7	1.5	-1.3	214	78	N/A
8	0.8	-0.7	207	78	N/A
9	0.2	-0.6	180	78	N/A
10	3.6	3.4	485	79	N/A
11	1.3	-2.3	263	77	N/A
12	0.5	-0.8	224	79	N/A
13	10.8	10.3	591	82	N/A
14	4.3	-6.5	406	82	N/A
15	1.9	-2.4	252	83	N/A
16	1.1	-0.8	205	82	N/A
17	0.5	-0.6	187	82	N/A
18	9.2	8.7	493	78	N/A
19	1.9	-7.3	350	79	N/A
20	1.0	-0.9	245	79	N/A
21	0.3	-0.7	213	78	N/A
22	14.7	14.4	360	75	N/A
23	5.8	-8.9	409	78	N/A
24	2.5	-3.3	286	78	N/A
25	1.6	-0.9	243	77	N/A
26	0.8	-0.8	222	77	N/A
27	0.3	-0.5	194	77	N/A
28	7.6	7.3	461	77	N/A
29	2.5	-5.1	287	77	N/A
30	5.1	2.6	589	77	N/A
31	2.2	-2.9	238	76	N/A
32	1.6	-0.6	198	76	N/A
33	11.8	10.2	415	83	N/A
34	3.2	-8.6	392	84	N/A
35	1.4	-1.8	254	82	N/A
36	0.7	-0.7	217	82	N/A
37	0.3	-0.4	182	82	N/A
38	5.2	4.9	365	79	N/A
39	2.1	-3.1	265	79	N/A
40	1.2	-0.9	212	79	N/A
41	0.6	-0.6	191	79	N/A
42	10.1	9.5	440	79	N/A
43	4.7	-5.4	354	79	N/A
44	1.8	-2.9	238	79	N/A
45	1.1	-0.7	198	79	N/A
46	0.4	-0.7	189	79	N/A
47	10.1	9.7	324	73	N/A
48	2.2	-7.9	382	76	N/A
49	5.8	3.6	250	75	N/A
50	9.6	3.8	396	76	N/A

Signature/Date: 7/25/2019

UNITED STATES ENVIRONMENTAL PROTECTION AGENCY
RESEARCH TRIANGLE PARK, NC 27711

FEB 2 8 2018

OFFICE OF
AIR QUALITY PLANNING
AND STANDARDS

Mr. Justin White
Hearthstone QHPP, Inc.
#17 Stafford Ave.
Morrisville, VT 05661

Dear Mr. White,

I am writing in response to your letter dated January 12, 2018, regarding wood heaters manufactured by Hearthstone QHPP, Inc. (Hearthstone). This response, dated February 28, 2018, supercedes our previous response (dated February 26, 2018) to correct an inaccuracy regarding required changes to ASTM E3053-17.

You are requesting to use an alternative test method, using cord wood, as referenced in section 60.532(c) of 40 CFR part 60, Subpart AAA, Standards of Performance for New Residential Wood Heaters (Subpart AAA) to meet the 2020 cord wood alternative compliance option. The 2020 cord wood alternative compliance option states that each affected wood heater manufactured or sold at retail for use in the United States on or after May 15, 2020, must not discharge into the atmosphere any gases that contain particulate matter in excess of 2.5 g/hr. Compliance must be determined by a cord wood test method approved by the Administrator along with the procedures in 40 CFR 60.534. You have requested approval to use the procedures and specifications found in ASTM Method E3053-17, a cord wood test method titled, "Standard Test Method for Determining Particulate Matter Emissions from Wood Heaters using Cordwood Test Fuel," in conjunction with ASTM E2515-11 and Canadian Standards Administration (CSA) Method CSA-B415.1-10, which are specified in 40 CFR 60.534.

We understand that Hearthstone is also requesting that the alternative method proposed above be approved to apply broadly to all wood heaters manufactured by Hearthstone meeting the requirements of Subpart AAA, from the approval date of this request until such time that Subpart AAA is revised or replaced to require a different cord wood certification method, providing all requirements of section 60.533 of Subpart AAA are met.

With the caveats set forth below, we approve your alternative test method request for certifying wood heaters using ASTM E3053-17 in conjunction with section 60.534 of Subpart AAA to meet the 2020 cord wood compliance option until such time that Subpart AAA is revised or replaced to require a different cord wood certification method. We also approve application of this alternative method to all wood heaters manufactured by Hearthstone meeting the requirements of Subpart AAA.

ED_005996_00000513-00031

As required in Subpart AAA, section 60.354(d), you or your approved test laboratory must also measure the first hour of particulate matter emissions for each test run using a separate filter in one of the two parallel sampling trains. These results must be reported separately and also included in the total particulate matter emissions per run. Also, as required by Subpart AAA, section 60.534(e), you must have your approved laboratory measure the efficiency, heat output, and carbon monoxide emissions of the tested wood heater using CSA-B415.1-10. For measurement of particulate matter emission concentrations, ASTM 2515-11 must be used.

The following change to ASTM E3053-17 must be followed:

1. Coal bed conditions prior to loading test fuel. The coal bed shall be a level plane without valleys or ridges for all test runs in the high, low, and medium burn rate categories.

The following changes to ASTM E2515-11 must be followed:

1. The filter temperature must be maintained between 80 and 90 degrees F during testing.

2. Filters must be weighed in pairs to reduce weighing error propagation; see ASTM 2515-11, Section 10.2.1 Analytical Procedure.

3. Sample filters must be Pall TX-40 or equivalent Teflon-coated glass fiber, and of 47 mm, 90 mm, 100 mm, or 110 mm in diameter.

4. Only one point is allowed outside the +/- 10 percent proportionality range per test run.

A copy of this letter must be included in each certification test report where this alternative test method is utilized.

It is reasonable that this alternative test method approval be broadly applicable to all wood heaters subject to the requirements of 40 CFR part 60, Subpart AAA. For this reason, we will post this letter as ALT-125 on our website at *http://www3.epa.gov/ttn/emc/approalt.html* for use by other interested parties. As noted earlier in this letter, this alternative method approval is valid until such time that Subpart AAA is revised or replaced to require a different cord wood certification method, and at such time, this alternative will be reconsidered and possibly withdrawn.

If you have additional questions regarding this approval, please contact Michael Toney of my staff at 919-541-5247 or toney.mike@epa.gov.

Sincerely,

Steffan M. Johnson, Group Leader
Measurement Technology Group

cc: Amanda Aldridge, EPA/OAQPS/OID
Adam Baumgart-Getz, EPA/OAQPS/OID
Rafael Sanchez, EPA/OECA
Michael Toney, EPA/OAQPS/AQAD

F1150 Emission Test Instructions

High Fire

Air settings on high - damper lever touching the left stop attached to the dial plate.

Kindling – 1.5lb

Startup fuel – 2.5lb

Test load – 5 pieces of wood, 17" long, moisture 21% - 22%

Start fire with 0.9lb kindling

Door closed at 2 – 3 minutes or when it starts smoking

At 0,2 – 0.3lb or when the fire is well established add the remainder of the kindling and few pieces of SU fuel, keep the door open for 1.5 – 2 min until the fire started well enough then close the door. The scale should read 1.8 – 1.9lb. Load more to the back.

Around 0.5lb add the remainder of the SU fuel, more to the back. Keep the door open until starts smoking.

At 1lb level the coals, zero the scale and load the test load. Load heavier pieces to the back and lightest to the front. Front bottom piece should be higher than the pilot hood and recessed as much possible to the back. Try to pack the load as tight as possible.

At 15 min turn on the fan on high setting

Stop the test at 1lb on the scale

Targeted Particulate Emission Rate – 4.5 – 5 g/h

Low Fire

Air settings **pos#8** – right side of the damper lever aligned with the white mark at pos#8

Test load for low fire – 5 pieces, MC – 21 – 22%

Start with the **high fire**, no sampling, following the same procedure as above.

Use 6 pieces of wood instead of 5 and load the heaviest to the front. Do not zero the scale

Fan on high at 15 min

At 2.8lb adjust the load bringing unburned wood to front.

When there are no more flames and stack temperature shows 420 – 450F rake the coals, zero the scale and load the test load.

Heavier pieces at the back, front bottom piece higher than the pilot hood and the whole load tight and as much as possible loaded to the back

At 6 minutes set the air to low at pos#8

At 15 min turn the fan on low.

Targeted Particulate Emission Rate – under 1 g/h

Medium Fire

Same as for the Low fire

Air set at 6 min to med setting – pos#11 (right side of the damper handle aligned with the white mark at pos#11)

Fan on Low at 15 min

Targeted Particulate Emission Rate – max 1.35 g/h

Sample Calculations – ASTM E3053 & E2515

Client: FPI
Model: F1150
Run: 1

Equations used to calculate the parameters listed below are described in this appendix. Sample calculations are provided for each equation. The raw data and printout results from a sample run are also provided for comparison to the sample calculations.

M_{Fldb} – Weight of test fuel load, dry basis, lb (kg)

M_{SUdb} – Weight of start-up fuel, dry basis, lb (kg)

M_{Kdb} - Weight of kindling, dry basis, lb (kg)

M_{FREHdb} - Total weight of all remaining fuel at end of high fire test run, lb (kg)

M_{TFBHdb} - Total weight of all fuel burned during high fire test run, lb (kg), dry basis

BR_H – Dry burn rate for high fire test run, from time when test fuel load is added to end of test run, lb/h (kg/h)

M_{TFBdb} - Total weight of fuel burned during low or medium fire test run, lb (kg), dry basis

BR - Dry burn rate for low and medium fire test runs, lb/h (kg/h)

V_s – Average gas velocity in the dilution tunnel, ft/sec

Q_{sd} – Average gas flow rate in dilution tunnel, dscf/hr

$V_{m(std)}$ – Volume of gas sampled, corrected to dry standard conditions, dscf

m_n – Total particulate matter collected, mg

C_s - Concentration of particulate matter in tunnel gas, dry basis, corrected to STP, g/dscf

E_T – Total particulate emissions, g

PR - Proportional rate variation

PM_{RH} - Particulate emission rate for high fire test run, g/hr

PM_{FH} - Particulate emission factor for high fire test run, g/dry kg of fuel burned

PM_R – Particulate emission rate for low or medium fire test run, g/hr

PM_F – Particulate emission factor for low or medium fire test run, g/dry kg of fuel burned

M_{Fldb} – Weight of test fuel load, dry basis, lb (kg)
ASTM E3053 equation (1)

$$M_{Fldb} = \Sigma((M_{FLnwb})(100/(100 + MC_{FLn})))$$

Where,

M_{FLnwb}	=	Weight of each test fuel piece, n, in test fuel load per 8.4.1, wet basis, lb (kg)
MC_{FLn}	=	Average fuel moisture of test fuel piece, n, in test fuel load, % dry basis
n	=	individual test fuel pieces that comprise the test fuel load, as applicable.

Sample Calculation:

n	M_{FLnwb}	MC_{FLn}	$(M_{FLnwb})(100/(100 + MC_{FLn}))$			
1	1.74	24.7	1.74 (100) / (100+ 24.7)) =		1.39	
2	1.97	21.9	1.97 (100) / (100+ 21.9)) =		1.62	
3	1.95	22.7	1.95 (100) / (100+ 22.7)) =		1.59	
4	2.52	20.3	2.52 (100) / (100+ 20.3)) =		2.10	
5	1.39	21.5	1.39 (100) / (100+ 21.5)) =		1.14	
6	0.00	NA	N/A		-	
7	N/A	N/A	N/A		-	
				SUM	7.84	lbs

M_{Fldb} = **7.84** lbs

M_{Fldb} = **3.56** kg

M_{SUdb} – Weight of start-up fuel, dry basis, lb (kg)
ASTM E3053 equation (2)

$$M_{SUdb} = (M_{SUwb})(100/(100 + MC_{SU}))$$

Where,

M_{SUwb} = Total weight of start-up fuel pieces, wet basis, lb (kg)

MC_{SU} = Average fuel moisture of the piece(s) from which start-up fuel was split, % dry basis

Sample Calculation:

M_{SUwb} = 2.52

MC_{SU} = 22.0

M_{SUdb} = 2.5 (100/(100+ 22.0)

M_{SUdb} = **2.07** lbs

= **0.94** kg

M_{Kdb} - Weight of kindling, dry basis, lb (kg)
ASTM E3053 equation (3)

$$M_{Kdb} = (M_{Kwb})(100/(100 + MC_K))$$

Where,

M_{Kwb} = Weight of kindling per 8.5.6, wet basis, lb (kg);

MC_K = Average moisture of kindling (may be assumed 10%), % dry basis.

Sample calculation:

M_{Kwb} = 1.54

MC_K = 10.0

M_{Kdb} = 1.54 (100/(100+ 10.0)

M_{Kdb} = **1.40** lbs

= **0.64** kgs

M_{FREHdb} - Total weight of all remaining fuel at end of high fire test run, lb (kg)
ASTM E3053 equation (4)

$$M_{FREHdb} = M_{RSUBdb} + M_{FLEHdb}$$

Where,

M_{RSUBdb} = Weight of residual start-up fuel bed when high fire test load added, lb (kg)

M_{FLEHdb} = Weight of unburned portion of test fuel load at the end of the high fire test run, lb (kg)

Sample calculation:

M_{RSUBdb} = 1.1

M_{FLEHdb} = 0.9

M_{FREHdb} = 1.10 + 0.9

M_{FREHdb} = **2.00** lbs

= **0.91** kg

M_{TFBHdb} - Total weight of all fuel burned during high fire test run, lb (kg), dry basis
ASTM E3053 equation (5)

$$M_{TFBHdb} = M_{Kdb} + M_{SUdb} + M_{FLdb} - M_{FREHdb}$$

Sample Calculation:

M_{Kdb} = 1.40

M_{SUdb} = 2.07

M_{FLdb} = 7.84

M_{FREHdb} = 2.00

M_{TFBHdb} = 1.40 + 2.07 + 7.84 - 2.00

= **9.31** lbs

= **4.22** kg

BR_H – Dry burn rate for high fire test run, from time when test fuel load is added to end of test run, lb/h (kg/h)

ASTM E3053 equation (6)

$$BR_H = 60\ (M_{FLdb} - M_{FLEHdb})/\theta_{H1}$$

Where,

θ_{H1} = Total duration of high fire test run, from time when test fuel load is added to end of test run, min.

Sample calculation:

M_{FLdb} = 7.84

M_{FLEHdb} = 0.90

θ_{H1} = 66

$$BR_H = \frac{60\ (\ 7.84\ -\ 0.90\ )}{66}$$

BR_H = **6.31** lb/hr

= **2.86** kg/hr

M_{TFBdb} - Total weight of fuel burned during low or medium fire test run, lb (kg), dry basis
ASTM E3053 equation (7)

$$M_{TFBdb} = M_{FLdb} - M_{FREdb}$$

Where,

M_{FLdb} = Total weight of fuel burned during low or medium fire test run, lb (kg), dry basis

M_{FREdb} = Weight of remaining fuel at end of low or medium fire test run, lb (kg)

Sample Calculation:

M_{FLdb} = N/A - Applicable to Low/Medium Fire Tests Only

M_{FREdb} = N/A - Applicable to Low/Medium Fire Tests Only

M_{TFBdb} = N/A - N/A

= **N/A** lbs

= **N/A** kg

BR - Dry burn rate for low and medium fire test runs, lb/h (kg/h)
ASTM E3053 equation (8)

$$BR = \frac{60\ M_{TFBdb}}{\theta}$$

Where,

θ = Total test run duration for low or medium fire test run, min.

Sample Calculation:

M_{TFBdb} = N/A - Applicable to Low/Medium Fire Tests Only
θ = N/A - Applicable to Low/Medium Fire Tests Only

$$BR = \frac{60 \times \text{N/A}}{\text{N/A}}$$

BR = **N/A** lb/hr
= **N/A** kg/hr

V_s – Average gas velocity in the dilution tunnel, ft/sec
ASTM E2515 equation (9)

$$v_s = F_P \times k_p \times C_p \times (\sqrt{\Delta P})_{avg} \times \sqrt{\frac{T_{s(avg)}}{P_s \times M_s}}$$

Where:

F_p	=	Adjustment factor for pitot tube center point reading = $\frac{V_{strav}}{V_{scent}}$, ASTM E2515 Equation (1)
v_{scent}	=	Dilution tunnel velocity calculated after the multi-point pitot traverse at the center, ft/sec
v_{strav}	=	Dilution tunnel velocity calculated after the multi-point pitot traverse, ft/sec
k_p	=	Pitot tube constant, 85.49
C_p	=	Pitot tube coefficient: 0.99, unitless
ΔP*	=	Velocity pressure in the dilution tunnel, in H_2O
T_s	=	Absolute average gas temperature in the dilution tunnel, °R; (°R = °F + 460)
P_s	=	Absolute average gas static pressure in dilution tunnel, = $P_{bar} + P_g$, in Hg
P_{bar}	=	Barometric pressure at test site, in. Hg
P_g	=	Static pressure of tunnel, in. H_20; (in Hg = in H_20/13.6)
M_s	=	**The dilution tunnel wet molecular weight; M_s = 28.78 assuming a dry weight of 29 lb/lb-mole

Sample calculation:

$$Fp = \frac{17.57}{19.53} = 0.899$$

$$V_s = 0.899 \times 85.49 \times 0.99 \times 0.285 \times \left(\frac{117.8 + 460}{\left(29.95 + \frac{-0.23}{13.6}\right) \times 28.78} \right)^{1/2}$$

V_s = **17.74** ft/s

*The ASTM test standard mistakenly has the square root of the average delta p instead of the average of the square root of delta p. The current EPA Method 2 is also incorrect. This was verified by Mike Toney at EPA.

**The ASTM test standard mistakenly identifies Ms as the dry molecular weight. It should be the wet molecular weight as indicated in EPA Method 2.

Q_{sd} – Average gas flow rate in dilution tunnel, dscf/hr
ASTM E2515 equation (3)

$$Q_{sd} = 3600 \times (1 - B_{ws}) \times v_s \times A \times \frac{T_{std}}{T_{s(avg)}} \times \frac{P_s}{P_{std}}$$

Where:

3600	=	Conversion from seconds to hours (ASTM method uses 60 to convert in minutes)
B_{ws}	=	Water vapor in gas stream, proportion by volume; assume 2%
A	=	Cross sectional area of dilution tunnel, ft^2
T_{std}	=	Standard absolute temperature, 528 °R
P_s	=	Absolute average gas static pressure in dilution tunnel, = P_{bar} + P_g , in Hg
$T_{s(avg)}$	=	Absolute average gas temperature in the dilution tunnel, °R; (°R = °F + 460)
P_{std}	=	Standard absolute pressure, 29.92 in Hg

Sample calculation:

$$Q_{sd} = 3600 \times (1 - 0.02) \times 17.74 \times 0.1963 \times \frac{528}{117.8 + 460} \times \frac{29.95 + \frac{-0.23}{13.6}}{29.92}$$

Q_{sd} = **11232.8** dscf/hr

$V_{m(std)}$ – Volume of Gas Sampled Corrected to Dry Standard Conditions, dscf
ASTM E2515 equation (6)

$$V_{m(std)} = K_1 V_m Y \frac{P_{bar} + \frac{\Delta H}{13.6}}{T_m}$$

Where:

K_1	=	17.64 °R/in. Hg
V_m	=	Volume of gas sample measured at the dry gas meter, dcf
Y	=	Dry gas meter calibration factor, dimensionless
P_{bar}	=	Barometric pressure at the testing site, in. Hg
ΔH	=	Average pressure differential across the orifice meter, in. H_2O
T_m	=	Absolute average dry gas meter temperature, °R

Sample Calculation:

Using equation for Train 1:

$$V_{m(std)} = 17.64 \times 14.382 \times 0.999 \times \frac{\left(29.95 + \frac{2.18}{13.6}\right)}{(92.1 + 460)}$$

$V_{m(std)}$ = **13.819** dscf

Using equation for Train 2:

$$V_{m(std)} = 17.64 \times 14.134 \times 0.996 \times \frac{\left(29.95 + \frac{2.12}{13.6}\right)}{(91.4 + 460)}$$

$V_{m(std)}$ = **13.557** dscf

Using equation for ambient train:

$$V_{m(std)} = 17.64 \times 19.08 \times 0.992 \times \frac{\left(\underline{29.95} + \frac{0.00}{13.6}\right)}{(80.3 + 460)}$$

$V_{m(std)}$ = **18.508** dscf

m_n – Total Particulate Matter Collected, mg
ASTM E2515 Equation (12)

$$m_n = m_p + m_f + m_g$$

Where:

m_p = mass of particulate matter from probe, mg

m_f = mass of particulate matter from filters, mg

m_g = mass of particulate matter from filter seals, mg

Sample Calculation:

Using equation for Train A (first hour):

m_n = 0.0 + 3.4 + 0.0

m_n = 3.4 mg

Using equation for Train A (post-first hour):

m_n = 0.0 + 0.9 + 0.3

m_n = 1.2 mg

Train A aggregate:

m_n = 3.4 + 1.2

m_n = **4.6** mg

Using equation for Train B:

m_n = 0 + 4.4 + 0.7

m_n = **5.1** mg

C_s - Concentration of particulate matter in tunnel gas, dry basis, corrected to STP, g/dscf
ASTM E2515 equation (13)

$$C_s = K_2 \times \frac{m_n}{V_{m(std)}}$$

Where:

K_2	=	Constant, 0.001 g/mg
m_n	=	Total mass of particulate matter collected in the sampling train, mg
$V_{m(std)}$	=	Volume of gas sampled corrected to dry standard conditions, dscf

Sample calculation:

For Train 1:

$$C_s = 0.001 \times \frac{4.6}{13.82}$$

C_s = **0.00033** g/dscf

For Train 2

$$C_s = 0.001 \times \frac{5.1}{13.56}$$

C_s = **0.00038** g/dscf

For Ambient Train

$$C_r = 0.001 \times \frac{0.1}{18.51}$$

C_r = **0.000005** g/dscf

E_T – Total Particulate Emissions, g
ASTM E2515 equation (15)

$$E_T = (c_s - c_r) \times Q_{std} \times \theta$$

Where:

C_s	=	Concentration of particulate matter in tunnel gas, g/dscf
C_r	=	Concentration particulate matter room air, g/dscf
Q_{std}	=	Average dilution tunnel gas flow rate, dscf/hr
θ	=	Total time of test run, minutes

Sample calculation:

For Train 1

E_T = (0.000333 - 0.000005) x 11232.8 x 98 /60

E_T = **6.01** g

For Train 2

E_T = (0.000376 - 0.000005) x 11232.8 x 98 /60

E_T = **6.80** g

Average

E = **6.41** g

Total emission values shall not differ by more than 7.5% from the total average emissions

7.5% of the average =	0.48
Train 1 difference =	0.40
Train 2 difference =	0.40

PR - Proportional Rate Variation

ASTM E2515 equation (16)

$$PR = \left[\frac{\theta \times V_{mi} \times V_s \times T_m \times T_{si}}{\theta_i \times V_m \times V_{si} \times T_{mi} \times T_s} \right] \times 100$$

Where:

θ	=	Total sampling time, min
θ_i	=	Length of recording interval, min
V_{mi}	=	Volume of gas sample measured by the dry gas meter during the "ith" time interval, dcf
V_m	=	Volume of gas sample as measured by dry gas meter, dcf
V_{si}	=	Average gas velocity in the dilution tunnel during the "ith" time interval, ft/sec
V_s	=	Average gas velocity in the dilution tunnel, ft/sec
T_{mi}	=	Absolute average dry gas meter temperature during the "ith" time interval, ^oR
T_m	=	Absolute average dry gas meter temperature, ^oR
T_{si}	=	Absolute average gas temperature in the dilution tunnel during the "ith" time interval, ^oR
T_s	=	Absolute average gas temperature in the dilution tunnel, ^oR

Sample calculation (for the first 1 minute interval of Train 1):

$$PR = \left(\frac{98 \times 0.096 \times 17.74 \times (82.0 + 460) \times (92.1 + 460)}{1 \times 14.382 \times 16.97 \times (117.8 + 460) \times (80.0 + 460)} \right) \times 100$$

PR = **66** %

PM_{RH} - Particulate emission rate for high fire test run, g/hr;
ASTM E3053 equation (9)

$$PM_{RH} = 60(E_{TH}/\theta_{H2})$$

Where,

E_{TH} = Total particulate emissions for high fire test run including kindling and start-up, g

θ_{H2} = Total duration of high fire test run, from ignition of kindling to end of test run, min.

Sample Calculation:

E_{TH} = 6.41

θ_{H2} = 98

PM_{RH} = 60(6.41 / 98)

PM_{RH} = **3.92** g/hr

PM_{FH} - Particulate emission factor for high fire test run, g/dry kg of fuel burned.

ASTM E3053 equation (10)

$$PM_{FH} = E_{TH}/M_{TFBHdb}$$

Sample Calculation:

E_{TH} = 6.41

M_{TFBHdb} = 4.22

PM_{FH} = 6.41 / 4.22

= **1.52** g/kg

PM_R - Particulate emission rate for low or medium fire test runs, g/hr
ASTM E3053 equation (12)

$$PM_R = 60(E_T/\theta)$$

Where,

E_T = Total particulate emissions for low or medium fire test runs from Test Method E2515, g

Sample Calculation:

E_T = N/A - Applicable to Low/Medium Fire Tests Only
θ = N/A - Applicable to Low/Medium Fire Tests Only

PM_R = 60(N/A / N/A)

PM_{RH} = **N/A** g/hr

PM_{FH} - Particulate emission factor for high fire test run, g/dry kg of fuel burned.
ASTM E3053 equation (13)

$$PM_F = E_T/M_{TFBdb}$$

Sample Calculation:

E_T = N/A - Applicable to Low/Medium Fire Tests Only
M_{TFBdb} = N/A - Applicable to Low/Medium Fire Tests Only

PM_{FH} = N/A / N/A
= **N/A** g/kg

Sample Calculations – ASTM E3053 & E2515

Client: FPI
Model: F1150
Run: 2

Equations used to calculate the parameters listed below are described in this appendix. Sample calculations are provided for each equation. The raw data and printout results from a sample run are also provided for comparison to the sample calculations.

M_{Fldb} – Weight of test fuel load, dry basis, lb (kg)

M_{SUdb} – Weight of start-up fuel, dry basis, lb (kg)

M_{Kdb} - Weight of kindling, dry basis, lb (kg)

M_{FREHdb} - Total weight of all remaining fuel at end of high fire test run, lb (kg)

M_{TFBHdb} - Total weight of all fuel burned during high fire test run, lb (kg), dry basis

BR_H – Dry burn rate for high fire test run, from time when test fuel load is added to end of test run, lb/h (kg/h)

M_{TFBdb} - Total weight of fuel burned during low or medium fire test run, lb (kg), dry basis

BR - Dry burn rate for low and medium fire test runs, lb/h (kg/h)

V_s – Average gas velocity in the dilution tunnel, ft/sec

Q_{sd} – Average gas flow rate in dilution tunnel, dscf/hr

$V_{m(std)}$ – Volume of gas sampled, corrected to dry standard conditions, dscf

m_n – Total particulate matter collected, mg

C_s - Concentration of particulate matter in tunnel gas, dry basis, corrected to STP, g/dscf

E_T – Total particulate emissions, g

PR - Proportional rate variation

PM_{RH} - Particulate emission rate for high fire test run, g/hr

PM_{FH} - Particulate emission factor for high fire test run, g/dry kg of fuel burned

PM_R – Particulate emission rate for low or medium fire test run, g/hr

PM_F – Particulate emission factor for low or medium fire test run, g/dry kg of fuel burned

M_{Fldb} – Weight of test fuel load, dry basis, lb (kg)
ASTM E3053 equation (1)

$$M_{Fldb} = \Sigma((M_{FLnwb})(100/(100 + MC_{FLn})))$$

Where,

M_{FLnwb}	=	Weight of each test fuel piece, n, in test fuel load per 8.4.1, wet basis, lb (kg)
MC_{FLn}	=	Average fuel moisture of test fuel piece, n, in test fuel load, % dry basis
n	=	individual test fuel pieces that comprise the test fuel load, as applicable.

Sample Calculation:

n	M_{FLnwb}	MC_{FLn}	$(M_{FLnwb})(100/(100 + MC_{FLn}))$		
1	2.21	21.7	2.21 (100) / (100+ 21.7)) =	1.82	
2	2.93	20.5	2.93 (100) / (100+ 20.5)) =	2.43	
3	2.16	21.6	2.16 (100) / (100+ 21.6)) =	1.78	
4	3.04	23.2	3.04 (100) / (100+ 23.2)) =	2.47	
5	1.62	20.1	1.62 (100) / (100+ 20.1)) =	1.35	
6	0.00	NA	N/A	-	
7	0.00		N/A	-	
			SUM	9.84	lbs

M_{Fldb} = **9.84** lbs

M_{Fldb} = **4.46** kg

M_{SUdb} – Weight of start-up fuel, dry basis, lb (kg)
ASTM E3053 equation (2)

$$M_{SUdb} = (M_{SUwb})(100/(100 + MC_{SU}))$$

Where,

M_{SUwb} = Total weight of start-up fuel pieces, wet basis, lb (kg)

MC_{SU} = Average fuel moisture of the piece(s) from which start-up fuel was split, % dry basis

Sample Calculation:

M_{SUwb} = N/A - Applicable to High Fire Tests Only

MC_{SU} = N/A - Applicable to High Fire Tests Only

M_{SUdb} = N/A (100/(100+ N/A)

M_{SUdb} = **N/A** lbs

= **N/A** kg

M_{Kdb} - Weight of kindling, dry basis, lb (kg)
ASTM E3053 equation (3)

$$M_{Kdb} = (M_{Kwb})(100/(100 + MC_K))$$

Where,

M_{Kwb} = Weight of kindling per 8.5.6, wet basis, lb (kg);

MC_K = Average moisture of kindling (may be assumed 10%), % dry basis.

Sample calculation:

M_{Kwb} = N/A - Applicable to High Fire Tests Only

MC_K = N/A - Applicable to High Fire Tests Only

M_{Kdb} = N/A (100/(100+ N/A)

M_{Kdb} = **N/A** lbs

= **N/A** kgs

M_{FREHdb} - Total weight of all remaining fuel at end of high fire test run, lb (kg)
ASTM E3053 equation (4)

$$M_{FREHdb} = M_{RSUBdb} + M_{FLEHdb}$$

Where,

M_{RSUBdb} = Weight of residual start-up fuel bed when high fire test load added, lb (kg)

M_{FLEHdb} = Weight of unburned portion of test fuel load at the end of the high fire test run, lb (kg)

Sample calculation:

M_{RSUBdb} = N/A - Applicable to High Fire Tests Only

M_{FLEHdb} = N/A - Applicable to High Fire Tests Only

M_{FREHdb} = N/A + N/A

M_{FREHdb} = **N/A** lbs

= **N/A** kg

M_{TFBHdb} - Total weight of all fuel burned during high fire test run, lb (kg), dry basis
ASTM E3053 equation (5)

$$M_{TFBHdb} = M_{Kdb} + M_{SUdb} + M_{FLdb} - M_{FREHdb}$$

Sample Calculation:

M_{Kdb} = N/A

M_{SUdb} = N/A

M_{FLdb} = N/A

M_{FREHdb} = N/A

M_{TFBHdb} = N/A + N/A + N/A - N/A

= **N/A** lbs

= **N/A** kg

BR_H – Dry burn rate for high fire test run, from time when test fuel load is added to end of test run, lb/h (kg/h)

ASTM E3053 equation (6)

$$BR_H = 60\ (M_{FLdb} - M_{FLEHdb})/\theta_{H1}$$

Where,

θ_{H1} = Total duration of high fire test run, from time when test fuel load is added to end of test run, min.

Sample calculation:

M_{FLdb} = N/A - Applicable to High Fire Tests Only

M_{FLEHdb} = N/A - Applicable to High Fire Tests Only

θ_{H1} = N/A - Applicable to High Fire Tests Only

$$BR_H = \frac{60\ (\ \text{N/A}\ -\ \text{N/A}\ )}{\text{N/A}}$$

BR_H = **N/A** lb/hr

= **N/A** kg/hr

M_{TFBdb} - Total weight of fuel burned during low or medium fire test run, lb (kg), dry basis
ASTM E3053 equation (7)

$$M_{TFBdb} = M_{FLdb} - M_{FREdb}$$

Where,

M_{FLdb} = Total weight of fuel burned during low or medium fire test run, lb (kg), dry basis

M_{FREdb} = Weight of remaining fuel at end of low or medium fire test run, lb (kg)

Sample Calculation:

M_{FLdb} = 9.84

M_{FREdb} = 0.00

M_{TFBdb} = 9.84 - 0.00

= **9.84** lbs

= **4.46** kg

BR - Dry burn rate for low and medium fire test runs, lb/h (kg/h)
ASTM E3053 equation (8)

$$BR = \frac{60\ M_{TFBdb}}{\theta}$$

Where,

θ = Total test run duration for low or medium fire test run, min.

Sample Calculation:

M_{TFBdb} = 9.84
θ = 284

$$BR = \frac{60 \times 9.84}{284}$$

BR = **2.08** lb/hr
= **0.94** kg/hr

V_s – Average gas velocity in the dilution tunnel, ft/sec
ASTM E2515 equation (9)

$$v_s = F_P \times k_p \times C_p \times (\sqrt{\Delta P})_{avg} \times \sqrt{\frac{T_{s(avg)}}{P_s \times M_s}}$$

Where:

F_p	=	Adjustment factor for pitot tube center point reading = $\frac{V_{strav}}{V_{scent}}$, ASTM E2515 Equation (1)
v_{scent}	=	Dilution tunnel velocity calculated after the multi-point pitot traverse at the center, ft/sec
v_{strav}	=	Dilution tunnel velocity calculated after the multi-point pitot traverse, ft/sec
k_p	=	Pitot tube constant, 85.49
C_p	=	Pitot tube coefficient: 0.99, unitless
ΔP*	=	Velocity pressure in the dilution tunnel, in H_2O
T_s	=	Absolute average gas temperature in the dilution tunnel, °R; (°R = °F + 460)
P_s	=	Absolute average gas static pressure in dilution tunnel, = $P_{bar} + P_g$, in Hg
P_{bar}	=	Barometric pressure at test site, in. Hg
P_g	=	Static pressure of tunnel, in. H_20; (in Hg = in H_20/13.6)
M_s	=	**The dilution tunnel wet molecular weight; M_s = 28.78 assuming a dry weight of 29 lb/lb-mole

Sample calculation:

$$Fp = \frac{18.08}{19.95} = 0.906$$

$$V_s = 0.906 \times 85.49 \times 0.99 \times 0.284 \times \left(\frac{99.5 + 460}{\left(29.99 + \frac{-0.21}{13.6}\right) \times 28.78} \right)^{1/2}$$

V_s = **17.57** ft/s

*The ASTM test standard mistakenly has the square root of the average delta p instead of the average of the square root of delta p. The current EPA Method 2 is also incorrect. This was verified by Mike Toney at EPA.

**The ASTM test standard mistakenly identifies Ms as the dry molecular weight. It should be the wet molecular weight as indicated in EPA Method 2.

Q_{sd} – Average gas flow rate in dilution tunnel, dscf/hr
ASTM E2515 equation (3)

$$Q_{sd} = 3600 \times (1 - B_{ws}) \times v_s \times A \times \frac{T_{std}}{T_{s(avg)}} \times \frac{P_s}{P_{std}}$$

Where:

3600	=	Conversion from seconds to hours (ASTM method uses 60 to convert in minutes)
B_{ws}	=	Water vapor in gas stream, proportion by volume; assume 2%
A	=	Cross sectional area of dilution tunnel, ft^2
T_{std}	=	Standard absolute temperature, 528 °R
P_s	=	Absolute average gas static pressure in dilution tunnel, = P_{bar} + P_g , in Hg
$T_{s(avg)}$	=	Absolute average gas temperature in the dilution tunnel, °R; (°R = °F + 460)
P_{std}	=	Standard absolute pressure, 29.92 in Hg

Sample calculation:

$$Q_{sd} = 3600 \times (1 - 0.02) \times 17.57 \times 0.1963 \times \frac{528}{99.5 + 460} \times \frac{29.99 + \frac{-0.21}{13.6}}{29.92}$$

Q_{sd} = **11502.3** dscf/hr

$V_{m(std)}$ – Volume of Gas Sampled Corrected to Dry Standard Conditions, dscf
ASTM E2515 equation (6)

$$V_{m(std)} = K_1 V_m Y \frac{P_{bar} + \frac{\Delta H}{13.6}}{T_m}$$

Where:

K_1	=	17.64 °R/in. Hg
V_m	=	Volume of gas sample measured at the dry gas meter, dcf
Y	=	Dry gas meter calibration factor, dimensionless
P_{bar}	=	Barometric pressure at the testing site, in. Hg
ΔH	=	Average pressure differential across the orifice meter, in. H_2O
T_m	=	Absolute average dry gas meter temperature, °R

Sample Calculation:

Using equation for Train 1:

$$V_{m(std)} = 17.64 \times 42.370 \times 0.999 \times \frac{\left(29.99 + \frac{2.24}{13.6}\right)}{(97.8 + 460)}$$

$V_{m(std)}$ = **40.361** dscf

Using equation for Train 2:

$$V_{m(std)} = 17.64 \times 42.082 \times 0.996 \times \frac{\left(29.99 + \frac{2.22}{13.6}\right)}{(96.2 + 460)}$$

$V_{m(std)}$ = **40.076** dscf

Using equation for ambient train:

$$V_{m(std)} = 17.64 \times 55.36 \times 0.992 \times \frac{\left(\underline{29.99} + \frac{0.00}{13.6}\right)}{(78.0 + 460)}$$

$V_{m(std)}$ = **53.989** dscf

m_n – Total Particulate Matter Collected, mg
ASTM E2515 Equation (12)

$$m_n = m_p + m_f + m_g$$

Where:

m_p = mass of particulate matter from probe, mg

m_f = mass of particulate matter from filters, mg

m_g = mass of particulate matter from filter seals, mg

Sample Calculation:

Using equation for Train A (first hour):

m_n = 0.0 + 1.9 + 0.0

m_n = 1.9 mg

Using equation for Train A (post-first hour):

m_n = 0.1 + 0.8 + 0.5

m_n = 1.4 mg

Train A aggregate:

m_n = 1.9 + 1.4

m_n = **3.3** mg

Using equation for Train B:

m_n = 0.1 + 1.9 + 1.3

m_n = **3.3** mg

C_s - Concentration of particulate matter in tunnel gas, dry basis, corrected to STP, g/dscf
ASTM E2515 equation (13)

$$C_s = K_2 \times \frac{m_n}{V_{m(std)}}$$

Where:

K_2	=	Constant, 0.001 g/mg
m_n	=	Total mass of particulate matter collected in the sampling train, mg
$V_{m(std)}$	=	Volume of gas sampled corrected to dry standard conditions, dscf

Sample calculation:

For Train 1:

$$C_s = 0.001 \times \frac{3.3}{40.36}$$

C_s = **0.00008** g/dscf

For Train 2

$$C_s = 0.001 \times \frac{3.3}{40.08}$$

C_s = **0.00008** g/dscf

For Ambient Train

$$C_r = 0.001 \times \frac{0.1}{53.99}$$

C_r = **0.000002** g/dscf

E_T – Total Particulate Emissions, g
ASTM E2515 equation (15)

$$E_T = (c_s - c_r) \times Q_{std} \times \theta$$

Where:

C_s	=	Concentration of particulate matter in tunnel gas, g/dscf
C_r	=	Concentration particulate matter room air, g/dscf
Q_{std}	=	Average dilution tunnel gas flow rate, dscf/hr
θ	=	Total time of test run, minutes

Sample calculation:

For Train 1

E_T = (0.000082 - 0.000002) x 11502.3 x 284 /60

E_T = **4.35** g

For Train 2

E_T = (0.000082 - 0.000002) x 11502.3 x 284 /60

E_T = **4.38** g

Average

E = **4.37** g

Total emission values shall not differ by more than 7.5% from the total average emissions

7.5% of the average =	0.33
Train 1 difference =	0.02
Train 2 difference =	0.02

PR - Proportional Rate Variation
ASTM E2515 equation (16)

$$PR = \left[\frac{\theta \times V_{mi} \times V_s \times T_m \times T_{si}}{\theta_i \times V_m \times V_{si} \times T_{mi} \times T_s} \right] \times 100$$

Where:

θ = Total sampling time, min

θ_i = Length of recording interval, min

V_{mi} = Volume of gas sample measured by the dry gas meter during the "ith" time interval, dcf

V_m = Volume of gas sample as measured by dry gas meter, dcf

V_{si} = Average gas velocity in the dilution tunnel during the "ith" time interval, ft/sec

V_s = Average gas velocity in the dilution tunnel, ft/sec

T_{mi} = Absolute average dry gas meter temperature during the "ith" time interval, ^{o}R

T_m = Absolute average dry gas meter temperature, ^{o}R

T_{si} = Absolute average gas temperature in the dilution tunnel during the "ith" time interval, ^{o}R

T_s = Absolute average gas temperature in the dilution tunnel, ^{o}R

Sample calculation (for the first 1 minute interval of Train 1):

$$PR = \left(\frac{284 \times 0.103 \times 17.57 \times (126.0 + 460) \times (97.8 + 460)}{1 \times 42.37 \times 17.76 \times (99.5 + 460) \times (77.0 + 460)} \right) \times 100$$

PR = **74** %

PM_{RH} - Particulate emission rate for high fire test run, g/hr;
ASTM E3053 equation (9)

$$PM_{RH} = 60(E_{TH}/\theta_{H2})$$

Where,

E_{TH} = Total particulate emissions for high fire test run including kindling and start-up, g

θ_{H2} = Total duration of high fire test run, from ignition of kindling to end of test run, min.

Sample Calculation:

E_{TH} = N/A - Applicable to High Fire Tests Only

θ_{H2} = N/A - Applicable to High Fire Tests Only

PM_{RH} = 60(N/A / N/A)

PM_{RH} = **N/A** g/hr

PM_{FH} - Particulate emission factor for high fire test run, g/dry kg of fuel burned.
ASTM E3053 equation (10)

$$PM_{FH} = E_{TH}/M_{TFBHdb}$$

Sample Calculation:

E_{TH} = N/A - Applicable to High Fire Tests Only

M_{TFBHdb} = N/A - Applicable to High Fire Tests Only

PM_{FH} = N/A / N/A

= **N/A** g/kg

PM_R - Particulate emission rate for low or medium fire test runs, g/hr
ASTM E3053 equation (12)

$$PM_R = 60(E_T/\theta)$$

Where,

E_T = Total particulate emissions for low or medium fire test runs from Test Method E2515, g

Sample Calculation:

E_T = 4.37
θ = 284

PM_R = 60(4.37 / 284)

PM_{RH} = **0.92** g/hr

PM_{FH} - Particulate emission factor for high fire test run, g/dry kg of fuel burned.
ASTM E3053 equation (13)

$$PM_F = E_T/M_{TFBdb}$$

Sample Calculation:

E_T = 4.37
M_{TFBdb} = 4.46

PM_{FH} = 4.37 / 4.46
= **0.98** g/kg

WOOD STOVE TEST DATA PACKET
ASTM E3053/E2515

Run 1 Data Summary

Client: FPI
Model: F1150
Job #: 19-496
Tracking #: 0031
Test Date: 7/22/2019

7/26/2019

Techician Signature | Date

ED_005996_00000513-00070

TEST RESULTS - ASTM E3053 / ASTM E2515

Client: FPI
Model: F1150
Run #: 1

Job #: 19-496
Tracking #: 0031
Technician: SJB
Date: 7/22/2019

Burn Rate (kg/hr):	2.86

	Ambient Sample	Sample Train A	Sample Train B	1st Hour Filter
Total Sample Volume (ft^3)	19.083	14.382	14.134	8.738
Average Gas Velocity in Dilution Tunnel (ft/sec)	17.74			
Average Gas Flow Rate in Dilution Tunnel (dscf/hr)	11232.8			
Average Gas Meter Temperature (°F)	80.3	92.1	91.4	87.6
Total Sample Volume (dscf)	18.508	13.819	13.557	8.465
Average Tunnel Temperature (°F)	117.8			
Total Time of Test (min)	98			
Total Particulate Catch (mg)	0.1	4.6	5.1	3.4
Particulate Concentration, dry-standard (g/dscf)	0.0000054	0.0003329	0.0003762	0.0004017
Total PM Emissions (g)	0.10	6.01	6.80	4.45
Particulate Emission Rate (g/hr)	0.06	3.68	4.16	4.45
Emissions Factor (g/kg)	-	1.42	1.61	-
Difference from Average Total Particulate Emissions (g)	-	0.40	0.40	-
Difference from Average Emissions Factor (g/kg)	-	0.09	0.09	-

Final Average Results	
Total Particulate Emissions (g)	6.41
Particulate Emission Rate (g/hr)	3.92
Emissions Factor (g/kg)	1.51
HHV Efficiency (%)	67.9%
LHV Efficiency (%)	72.6%
CO Emissions (g/min)	2.04

Quality Checks	Requirement	Observed	Result
Dual Train Precision	Each train within 7.5% of average emissions (in grams), or emission factors within 0.5 g/kg	See Above	OK
Filter Temps	>80 °F, <90 °F	Min: 80 / Max: 87	OK
Face Velocity	< 30 ft/min	8.2	OK
Leakage Rate	Less than 4% of average sample rate	0.002 cfm	OK
Ambient Temp	55-90 °F	Min: 76 / Max: 84	OK
Negative Probe Weight Evaluation	<5% of Total Catch	-2.2%	OK
Pro-Rate Variation	90% of readings between 90-110%; none greater than 120% or less than 80%	See Data Tabs	CHECK 10 MIN. INTERVAL PRO-RATES

B415.1 Efficiency Results

Manufacturer:	FPI
Model:	F1150
Date:	07/22/19
Run:	1
Control #:	19-496
Test Duration:	66
Output Category:	High

Test Results in Accordance with CSA B415.1-09

	HHV Basis	LHV Basis
Overall Efficiency	67.9%	72.6%
Combustion Efficiency	97.5%	97.5%
Heat Transfer Efficiency	69.6%	74.5%

Output Rate (kJ/h)	41,220	39,101	**(Btu/h)**
Burn Rate (kg/h)	3.04	6.70	**(lb/h)**
Input (kJ/h)	60,702	57,582	**(Btu/h)**

Test Load Weight (dry kg)	3.35	7.37	**dry lb**
MC wet (%)	18.08		
MC dry (%)	22.07		
Particulate (g)	6.41		
CO (g)	135		
Test Duration (h)	1.10		

Emissions	**Particulate**	**CO**
g/MJ Output	0.14	2.97
g/kg Dry Fuel	1.91	40.27
g/h	5.82	122.46
g/min	0.10	2.04
lb/MM Btu Output	0.33	6.90

Air/Fuel Ratio (A/F)	13.78

VERSION: **2.2** **12/14/2009**

HIGH FIRE FUEL LOAD DATA - ASTM E3053

Client:	FPI	Job #:	19-496
Model:	F1150	Tracking #	0031
Run #:	1	Technician:	SJB
		Date:	7/22/2019

Nominal Loading Density (lbs/ft^3, wet basis):	10		
Usable Firebox Volume (ft^3):	0.98		
Target Load Weight (lbs):	9.80		
Total Load Weight Range (lbs):	9.30	to	10.30
Core Load Weight Range (lbs):	4.40	to	6.40
Remainder Load Weight Range (lbs):	3.40	to	5.40
Core Load Piece Range (lbs):	1.50	to	2.50
Remainder Load Piece Range (lbs):	1.00	to	5.40
Max Allowable Kindling Weight (lbs):	1.91		
Max Allowable Start-up Fuel Weight (lbs):	2.87		

CORE LOAD DATA

				Fuel Piece Moisture Readings (%DB)					Dry Weight	
Piece #	Length (in)	Weight (lbs)	Within Spec?	1	2	3	Ave.	Within Spec?	lbs	kg
1	17.00	1.74	In Range	25.9	23.7	24.6	24.7	In Range	1.39	0.63
2	17.00	1.97	In Range	22.3	25.0	18.4	21.9	In Range	1.62	0.73
3	17.00	1.95	In Range	23.4	22.9	21.8	22.7	In Range	1.59	0.72
Core Load Wt. (lbs)		5.66	In Range							

REMAINDER LOAD DATA (1 to 3 Pieces)

				Fuel Piece Moisture Readings (%DB)					Dry Weight	
Piece #	Length (in)	Weight (lbs)	Within Spec?	1	2	3	Ave.	Within Spec?	lbs	kg
1	17.00	2.52	In Range	19.1	21.7	20.0	20.3	In Range	2.10	0.95
2	17.00	1.39	In Range	21.4	21.7	21.3	21.5	In Range	1.14	0.52
3			NA				NA	NA	NA	NA
Remainder Load (lbs)		3.91	In Range							

Total Load Weight (lbs):	9.57	In Range	
Core Load % of Total Weight:	59%	In Range	45-65%
Remainder % of Total Weight:	41%	In Range	35-55%
Total Load % of Target Weight:	98%	In Range	95-105%
Actual Fuel Loading Density (lb/ft3):	9.8		
Total Load Average Moisture Content (%DB):	22.1	In Range	19-25%
Total Load Average Moisture Content (%WB):	18.1		
Total Test Load Weight (dry basis):	7.84 lbs	3.56 kg	

KINDLING AND START-UP FUEL

		Kindling Moisture Readings (%DB)					Dry Weight	
Kindling Weight (lbs)	Within Spec?	1	2	3	Avg.	Within Spec?	lbs	kg
1.54	In Range	10	10	10	10.0	In Range	1.40	0.64

		Start-up Moisture Readings (%DB)					Dry Weight	
Start-up Fuel Wt. (lb)	Within Spec?	1	2	3	Avg.	Within Spec?	lbs	kg
2.52	In Range	21.6	20.9	23.4	22.0	In Range	2.07	0.94

TEST FUEL LOADING RANGE

Allowable Residual Start-up Fuel Range (lb):	1.0	to	1.9	
Actual Residual Start-up Fuel Weight (lb):		1.1		In Range

TEST END POINT

High Fire Test Run End Point Range:	0.9	to	1.1	lb
Actual Fuel Load Ending Weight (lb):		0.9		In Range

Total Weight All Fuel Added:	13.63 lbs, wet basis	Total Weight All Fuel Burned (dry basis):	9.31 lbs
	11.31 lbs, dry basis		4.22 kg
	5.13 kg, dry basis		

DILUTION TUNNEL & MISC. DATA - ASTM E3053 / E2515

Client:	FPI	Job #:	19-496
Model:	F1150	Tracking #:	0031
Run #:	1	Technician:	SJB
Test Start Time:	13:03	Date:	7/22/2019
Test Type:	High Fire		

Recording Interval (min):	1
Total Sampling Time (min):	98
High Fire Test Load Time (min):	32

Meter Box γ Factor:	0.999	(A)
Meter Box γ Factor:	0.996	(B)
Meter Box γ Factor:	0.992	(Ambient)

	Pre-Test	Post Test	Avg.
Barometric Pressure (in. Hg)	29.96	29.93	29.95
Relative Humidity (%)	36.6	31.4	
Room Air Velocity (ft/min)	0	0	
Scale Audit (lbs)	10.0	10.0	
Ambient Sample Volume:	19.083	ft^3	

Induced Draft Check (in. H_2O):	0
Smoke Capture Check (%):	100%
Date Flue Pipe Last Cleaned:	7/22/2019

Sample Train Post-Test Leak Checks

(A)	0.002	cfm @	-11	in. Hg
(B)	0.001	cfm @	-11	in. Hg
(Ambient)	0.002	cfm @	-14	in. Hg

DILUTION TUNNEL FLOW

Traverse Data

Point	dP (in H_2O)	Temp (°F)
1	0.062	80
2	0.082	80
3	0.076	80
4	0.052	80
5	0.060	80
6	0.078	80
7	0.072	80
8	0.056	80
Center	0.085	80

Static Pressure: -0.230 in. H_2O

Dilution Tunnel H_2O:	2.00	percent
Tunnel Diameter:	6	inches
Pitot Tube Cp:	0.99	[unitless]
Dilution Tunnel MW(dry):	29.00	lb/lb-mole
Dilution Tunnel MW(wet):	28.78	lb/lb-mole
Tunnel Area:	0.1963	ft^2
V_{strav}:	17.57	ft/sec
V_{scent}:	19.53	ft/sec
F_p:	0.899	[ratio]
Initial Tunnel Flow:	195.6	scf/min

TEST FUEL PROPERTIES

ASTM 3053-17 - Table A1.1 Fuel Properties by Fuel Species

Select Fuel Type	Species	%C	%H	%O	%Ash	MJ/kg	BTU/lb
	Ash, White	49.70	6.90	43.00	0.30	20.75	8927
	Beech	48.70	5.80	44.70	0.60	18.80	8088
	Birch, Sweet	49.80	6.50	43.40	0.30	20.12	8656
	Birch, Yellow	49.80	6.50	43.40	0.30	20.12	8656
	Doug Fir (Coast, Interior West/North)	48.73	6.87	43.90	0.50	19.81	8522
	Doug Fir (Interioir South)	48.73	6.87	43.90	0.50	19.81	8522
	Elm, Rock	50.40	6.60	42.30	0.70	20.49	8815
	Elm, Soft	50.40	6.60	42.30	0.70	20.49	8815
	Gum, Red	50.88	6.06	41.57	1.28	19.72	8478
	Larch, Western	50.54	6.36	42.40	0.70	17.58	7558
X	Maple, Hard	50.64	6.02	41.74	1.35	19.96	8587
	Maple, Sugar	50.64	6.02	41.74	1.35	19.96	8587
	Oak, Red	49.50	6.62	43.70	0.20	20.20	8690
	Oak, White	50.40	6.59	42.70	0.20	20.50	8819
	Pine, Southern	52.60	7.00	40.10	1.31	22.30	9587
	Pine, Southern Long Leaf	52.60	7.02	40.10	1.30	22.30	9594

WOODSTOVE PREBURN DATA

Client:	FPI	Job #:	19-496
Model:	F1150	Tracking #:	0031
Run #:	1	Technician:	SJB
		Date:	7/22/2019

High Fire Test Begins from Cold Start, No Preburn is Performed

BOX A TEST DATA - ASTM E3053 / ASTM E2515

Client: FPI
Model: F1150
Run #: 1

Job #: 19-496
Tracking #: 0031
Technician: SJB
Date: 7/22/2019

	Particulate Sampling Data							Fuel Weight (lb)		Temperature Data (°F)			
Elapsed Time (min)	Gas Meter (ft^3)	Sample Rate (cfm)	Dilution Tunnel dP (in H_2O)	Orifice dH (in H_2O)	Meter Temp (°F)	Meter Vacuum (in Hg)	Pro. Rate (%)	Scale Reading	Weight Change	Dilution Tunnel	Flue	Filter	Ambient
0	0.000		0.072	0.01	80	-0.13		0.9		80	78	80	76
1	0.096	0.096	0.079	2.16	80	0	66	0.7	-0.2	82	128	80	77
2	0.241	0.145	0.078	2.34	80	0	101	0.6	-0.1	93	272	80	77
3	0.390	0.149	0.078	2.32	80	-2.21	104	0.4	-0.2	94	306	80	77
4	0.538	0.148	0.084	2.30	80	0	99	0.3	-0.1	94	332	80	77
5	0.687	0.149	0.084	2.28	81	-0.85	100	0.2	-0.1	94	328	80	77
6	0.834	0.147	0.088	2.27	81	-2.6	96	1.3	1.1	96	299	80	77
7	0.983	0.149	0.076	2.28	81	-1.19	105	1.6	0.3	100	282	80	77
8	1.130	0.147	0.077	2.29	81	0	103	1.5	-0.1	95	265	80	77
9	1.279	0.149	0.075	2.28	81	-0.9	106	1.3	-0.2	95	292	80	77
10	1.425	0.146	0.082	2.28	81	-0.23	99	1.3	0	96	315	80	77
11	1.574	0.149	0.078	2.26	82	-1.44	103	1.2	-0.1	97	332	80	77
12	1.719	0.145	0.082	2.26	82	0	98	1.1	-0.1	99	364	80	77
13	1.868	0.149	0.084	2.23	82	-1.7	100	1.0	-0.1	100	378	80	77
14	2.013	0.145	0.084	2.23	82	-2.13	97	0.9	-0.1	100	368	80	77
15	2.161	0.148	0.082	2.23	83	-2.21	100	0.8	-0.1	100	362	80	77
16	2.306	0.145	0.078	2.22	83	0	101	0.7	-0.1	101	366	80	77
17	2.454	0.148	0.084	2.23	83	-0.98	99	0.6	-0.1	101	365	81	78
18	2.599	0.145	0.083	2.23	84	0	98	0.6	0	102	365	81	78
19	2.747	0.148	0.079	2.20	84	-2.32	103	2.3	1.7	109	381	81	78
20	2.891	0.144	0.082	2.20	84	-0.26	98	2.2	-0.1	108	367	81	78
21	3.039	0.148	0.078	2.19	85	-2.73	103	2.1	-0.1	106	356	81	78
22	3.183	0.144	0.087	2.18	85	-2.55	95	2.0	-0.1	105	364	81	78
23	3.330	0.147	0.076	2.18	85	-2.44	104	1.9	-0.1	106	373	81	78
24	3.474	0.144	0.083	2.16	86	-0.75	97	1.8	-0.1	106	384	81	78
25	3.621	0.147	0.080	2.19	86	-2.61	101	1.7	-0.1	108	408	81	78
26	3.765	0.144	0.077	2.16	86	-2.56	101	1.6	-0.1	109	422	81	78
27	3.910	0.145	0.084	2.15	87	-2.7	97	1.5	-0.1	111	437	81	78
28	4.055	0.145	0.090	2.16	87	-0.48	94	1.3	-0.2	112	439	81	79
29	4.200	0.145	0.078	2.15	87	-2.67	101	1.3	0	112	440	81	79
30	4.346	0.146	0.080	2.15	88	-2.72	100	1.2	-0.1	112	431	81	79
31	4.490	0.144	0.080	2.16	88	-2.64	99	1.1	-0.1	113	429	81	79
32	4.635	0.145	0.081	2.04	88	-0.02	101	9.9	8.8	131	449	81	79

BOX A TEST DATA - ASTM E3053 / ASTM E2515

Client: FPI
Model: F1150
Run #: 1

Job #: 19-496
Tracking #: 0031
Technician: SJB
Date: 7/22/2019

	Particulate Sampling Data							Fuel Weight (lb)		Temperature Data (°F)			
Elapsed Time (min)	Gas Meter (ft^3)	Sample Rate (cfm)	Dilution Tunnel dP (in H_2O)	Orifice dH (in H_2O)	Meter Temp (°F)	Meter Vacuum (in Hg)	Pro. Rate (%)	Scale Reading	Weight Change	Dilution Tunnel	Flue	Filter	Ambient
33	4.778	0.143	0.082	2.07	89	-2.34	98	9.3	-0.6	121	402	81	79
34	4.925	0.147	0.077	2.12	89	-2.06	103	9.2	-0.1	117	418	81	79
35	5.069	0.144	0.074	2.21	89	-1.95	103	9.1	-0.1	117	457	81	79
36	5.216	0.147	0.086	1.97	90	-3.46	98	8.9	-0.2	119	494	81	79
37	5.366	0.150	0.081	2.36	90	-1.49	103	8.7	-0.2	122	521	81	79
38	5.516	0.150	0.089	2.24	90	-2.53	98	8.5	-0.2	123	531	81	79
39	5.663	0.147	0.088	2.24	91	-2.38	97	8.2	-0.3	124	537	81	79
40	5.812	0.149	0.079	2.23	91	-2.59	104	8.1	-0.1	125	541	81	79
41	5.958	0.146	0.079	2.22	91	-2.51	102	7.9	-0.2	127	549	81	79
42	6.106	0.148	0.084	2.23	91	0	100	7.8	-0.1	128	556	81	80
43	6.253	0.147	0.080	2.22	92	0	102	7.5	-0.3	130	569	81	80
44	6.401	0.148	0.081	2.20	92	-0.81	102	7.3	-0.2	131	580	81	80
45	6.548	0.147	0.082	2.19	92	-0.64	101	7.1	-0.2	132	590	81	80
46	6.695	0.147	0.079	2.18	92	-2.66	103	6.9	-0.2	134	597	81	80
47	6.841	0.146	0.083	2.16	93	-2.62	99	6.7	-0.2	133	598	81	80
48	6.988	0.147	0.080	2.16	93	-2.34	102	6.4	-0.3	133	591	81	81
49	7.133	0.145	0.086	2.14	93	-0.62	97	6.2	-0.2	133	578	81	81
50	7.279	0.146	0.081	2.15	94	-2.72	100	6.0	-0.2	133	570	81	81
51	7.424	0.145	0.085	2.14	94	-0.53	97	5.9	-0.1	132	563	81	81
52	7.571	0.147	0.075	2.14	94	-2.07	105	5.7	-0.2	132	552	82	81
53	7.716	0.145	0.082	2.15	94	-1.38	99	5.5	-0.2	131	551	82	81
54	7.862	0.146	0.083	2.13	95	-2.57	99	5.4	-0.1	131	543	82	81
55	8.006	0.144	0.084	2.12	95	-1.74	97	5.2	-0.2	130	532	82	82
56	8.154	0.148	0.085	2.14	95	-2.49	99	5.1	-0.1	128	519	82	81
57	8.298	0.144	0.085	2.15	95	-2.61	96	4.9	-0.2	128	514	82	82
58	8.446	0.148	0.082	2.14	96	-1.02	100	4.8	-0.1	127	507	82	82
59	8.590	0.144	0.077	2.15	96	-2.71	101	4.7	-0.1	127	507	82	82
60	8.738	0.148	0.080	2.15	96	-2.2	102	4.5	-0.2	127	506	82	81
61	8.888	0.150	0.076	2.23	96	-2.43	106	4.4	-0.1	127	508	82	82
62	9.038	0.150	0.078	2.22	96	-0.04	104	4.2	-0.2	127	508	82	82
63	9.185	0.147	0.076	2.22	97	-1.4	103	4.1	-0.1	127	514	82	81
64	9.334	0.149	0.082	2.21	97	-1.71	101	3.9	-0.2	127	521	82	82
65	9.484	0.150	0.076	2.21	97	-0.17	105	3.8	-0.1	127	526	82	82

BOX A TEST DATA - ASTM E3053 / ASTM E2515

Client: FPI
Model: F1150
Run #: 1

Job #: 19-496
Tracking #: 0031
Technician: SJB
Date: 7/22/2019

	Particulate Sampling Data							Fuel Weight (lb)		Temperature Data (°F)			
Elapsed Time (min)	Gas Meter (ft^3)	Sample Rate (cfm)	Dilution Tunnel dP (in H_2O)	Orifice dH (in H_2O)	Meter Temp (°F)	Meter Vacuum (in Hg)	Pro. Rate (%)	Scale Reading	Weight Change	Dilution Tunnel	Flue	Filter	Ambient
66	9.631	0.147	0.076	2.19	97	-0.95	103	3.7	-0.1	128	530	82	82
67	9.780	0.149	0.083	2.18	97	-2.26	100	3.5	-0.2	128	535	82	82
68	9.926	0.146	0.082	2.18	98	-0.01	99	3.4	-0.1	129	536	82	82
69	10.074	0.148	0.081	2.14	98	-2.45	101	3.2	-0.2	129	537	82	82
70	10.219	0.145	0.081	2.15	98	-0.72	99	3.1	-0.1	129	540	82	83
71	10.366	0.147	0.085	2.13	98	-2.72	98	2.9	-0.2	130	552	83	82
72	10.511	0.145	0.080	2.10	98	-2.1	99	2.8	-0.1	130	564	83	83
73	10.657	0.146	0.087	2.10	98	-0.45	96	2.6	-0.2	131	558	83	83
74	10.802	0.145	0.082	2.23	99	-2.62	98	2.5	-0.1	131	547	83	83
75	10.952	0.150	0.076	2.25	99	-2.78	105	2.3	-0.2	130	548	83	83
76	11.100	0.148	0.085	2.23	99	-0.24	98	2.2	-0.1	130	544	83	83
77	11.250	0.150	0.084	2.23	99	-2.82	100	2.1	-0.1	129	533	83	84
78	11.398	0.148	0.075	2.23	99	-0.02	105	2.0	-0.1	129	524	83	83
79	11.548	0.150	0.079	2.25	99	-0.96	103	1.9	-0.1	129	513	83	83
80	11.694	0.146	0.077	2.24	100	-2.2	101	1.7	-0.2	128	498	83	83
81	11.846	0.152	0.081	2.24	100	-2.77	103	1.7	0	127	484	83	83
82	11.992	0.146	0.084	2.22	100	-0.02	97	1.7	0	126	473	83	84
83	12.143	0.151	0.080	2.23	100	-1.28	103	1.6	-0.1	125	466	83	83
84	12.290	0.147	0.083	2.22	100	-0.68	98	1.6	0	124	463	83	83
85	12.443	0.153	0.084	2.24	100	-0.02	101	1.5	-0.1	123	456	83	84
86	12.589	0.146	0.085	2.21	101	-0.06	96	1.4	-0.1	122	447	83	83
87	12.741	0.152	0.077	2.22	101	-2.83	105	1.4	0	121	442	83	83
88	12.888	0.147	0.084	2.24	101	-2.72	97	1.3	-0.1	120	438	83	82
89	13.038	0.150	0.080	2.23	101	-0.25	101	1.3	0	119	430	83	83
90	13.185	0.147	0.086	2.23	101	-0.1	96	1.2	-0.1	119	421	83	82
91	13.336	0.151	0.080	2.24	101	-1.64	102	1.2	0	118	416	84	82
92	13.484	0.148	0.079	2.22	101	-1.54	100	1.2	0	117	409	83	82
93	13.634	0.150	0.079	2.21	101	-2.44	102	1.1	-0.1	116	401	84	82
94	13.784	0.150	0.083	2.23	102	-2.6	99	1.1	0	115	398	83	82
95	13.932	0.148	0.081	2.21	102	-2.87	99	1.0	-0.1	115	395	84	82
96	14.083	0.151	0.082	2.21	102	-0.47	100	1.0	0	115	387	84	83
97	14.231	0.148	0.077	2.19	102	-0.35	101	1.0	0	114	385	84	83
98	14.382	0.151	0.083	2.23	102	-2.06	100	0.9	-0.1	114	384	84	83

BOX A TEST DATA - ASTM E3053 / ASTM E2515

Client: FPI
Model: F1150
Run #: 1

Job #: 19-496
Tracking #: 0031
Technician: SJB
Date: 7/22/2019

	Particulate Sampling Data							Fuel Weight (lb)		Temperature Data (°F)			
Elapsed Time (min)	Gas Meter (ft^3)	Sample Rate (cfm)	Dilution Tunnel dP (in H_2O)	Orifice dH (in H_2O)	Meter Temp (°F)	Meter Vacuum (in Hg)	Pro. Rate (%)	Scale Reading	Weight Change	Dilution Tunnel	Flue	Filter	Ambient
Avg/Tot	14.382	0.147	0.081	2.18	92	-1.52	100			118	452	82	80.3

BOX B TEST DATA - ASTM E3053 / ASTM E2515

Client: FPI
Model: F1150
Run #: 1

Job #: 19-496
Tracking #: 0031
Technician: SJB
Date: 7/22/2019

	Particulate Sampling Data							Flue Gas Data		
Elapsed Time (min)	Gas Meter (ft^3)	Sample Rate (cfm)	Orifice dH (in H_2O)	Meter Temp (°F)	Meter Vacuum (in Hg)	Pro. Rate (%)	Filter (°F)	Flue Draft (in H_2O)	CO_2 (%)	CO (%)
0	0.000		0.00	80	-1		86	0.000	0.00	0.01
1	0.096	0.096	2.14	80	-2.95	67	86	-0.040	1.20	0.18
2	0.237	0.141	2.08	80	-0.49	100	84	-0.060	4.53	0.12
3	0.380	0.143	2.19	80	-0.49	101	83	-0.060	8.15	0.28
4	0.526	0.146	2.18	80	-2.45	99	84	-0.060	8.79	0.27
5	0.668	0.142	2.17	80	-0.9	97	86	-0.070	7.57	0.11
6	0.813	0.145	2.15	80	-3.1	97	86	-0.050	4.36	0.18
7	0.954	0.141	2.18	80	-2.03	101	85	-0.050	2.15	0.25
8	1.099	0.145	2.16	80	-2.25	103	84	-0.050	3.39	0.33
9	1.239	0.140	2.15	81	-2.63	101	84	-0.050	5.30	0.26
10	1.384	0.145	2.15	81	-0.53	100	85	-0.060	6.40	0.18
11	1.525	0.141	2.15	81	-0.92	100	87	-0.080	6.07	0.13
12	1.670	0.145	2.14	81	-2.04	100	86	-0.070	7.01	0.06
13	1.811	0.141	2.13	82	-0.44	96	85	-0.060	8.00	0.04
14	1.953	0.142	2.13	82	-1.81	97	84	-0.080	6.46	0.12
15	2.094	0.141	2.11	82	-3.04	97	84	-0.060	5.90	0.12
16	2.236	0.142	2.12	82	-1.12	101	86	-0.070	6.30	0.06
17	2.380	0.144	2.12	83	-1.49	98	87	-0.070	5.85	0.10
18	2.519	0.139	2.12	83	-0.46	95	85	-0.070	5.65	0.12
19	2.664	0.145	2.09	83	-2.85	103	84	-0.070	5.74	0.08
20	2.806	0.142	2.22	84	-1.21	98	84	-0.060	4.26	0.17
21	2.954	0.148	2.21	84	-2.51	105	85	-0.060	4.71	0.19
22	3.097	0.143	2.19	84	-1.34	96	86	-0.070	5.34	0.18
23	3.244	0.147	2.19	85	-0.65	105	86	-0.070	5.97	0.08
24	3.387	0.143	2.19	85	-2.8	98	85	-0.070	6.46	0.10
25	3.534	0.147	2.19	85	-2.98	103	84	-0.070	7.64	0.11
26	3.677	0.143	2.18	86	-0.75	102	84	-0.060	7.84	0.07
27	3.824	0.147	2.18	86	-2.74	100	85	-0.060	8.51	0.09
28	3.967	0.143	2.18	86	-2.87	94	86	-0.070	8.43	0.09
29	4.113	0.146	2.18	87	-0.87	103	86	-0.070	8.15	0.03
30	4.257	0.144	2.15	87	-0.77	101	85	-0.070	6.68	0.08
31	4.401	0.144	2.15	87	-0.71	101	85	-0.070	6.90	0.10

BOX B TEST DATA - ASTM E3053 / ASTM E2515

Client: FPI
Model: F1150
Run #: 1

Job #: 19-496
Tracking #: 0031
Technician: SJB
Date: 7/22/2019

	Particulate Sampling Data							Flue Gas Data		
Elapsed Time (min)	Gas Meter (ft^3)	Sample Rate (cfm)	Orifice dH (in H_2O)	Meter Temp (°F)	Meter Vacuum (in Hg)	Pro. Rate (%)	Filter (°F)	Flue Draft (in H_2O)	CO_2 (%)	CO (%)
32	4.543	0.142	2.07	88	-1.65	100	84	-0.060	6.07	0.11
33	4.685	0.142	2.06	88	-1.6	99	84	-0.070	2.57	0.47
34	4.828	0.143	2.05	88	-1.51	102	85	-0.070	5.92	0.46
35	4.969	0.141	2.06	89	-2.51	103	86	-0.080	7.64	0.27
36	5.114	0.145	1.98	89	-3.6	98	86	-0.090	9.17	0.24
37	5.260	0.146	2.27	89	-2.04	102	86	-0.090	10.33	0.32
38	5.410	0.150	2.28	90	-2.64	100	84	-0.090	10.12	0.24
39	5.553	0.143	2.16	90	-0.57	96	85	-0.070	10.12	0.23
40	5.700	0.147	2.14	90	-2.94	104	86	-0.080	9.91	0.24
41	5.841	0.141	2.14	91	-0.66	100	86	-0.090	10.22	0.25
42	5.988	0.147	2.13	91	-0.52	101	86	-0.090	10.64	0.27
43	6.130	0.142	2.12	91	-2.96	100	85	-0.100	10.97	0.29
44	6.275	0.145	2.10	91	-2.6	102	85	-0.090	11.38	0.37
45	6.417	0.142	2.11	92	-0.81	99	84	-0.080	11.78	0.46
46	6.562	0.145	2.09	92	-0.58	103	84	-0.080	12.04	0.63
47	6.704	0.142	2.09	92	-1.15	98	84	-0.080	12.19	0.74
48	6.847	0.143	2.07	92	-1.83	101	86	-0.090	11.96	0.88
49	6.989	0.142	2.06	93	-2.87	97	86	-0.090	11.66	0.81
50	7.133	0.144	2.20	93	-1.75	101	87	-0.090	11.06	0.65
51	7.279	0.146	2.19	93	-0.73	100	86	-0.080	10.64	0.45
52	7.424	0.145	2.17	93	-0.93	105	86	-0.090	10.16	0.40
53	7.571	0.147	2.18	94	-0.74	102	85	-0.100	10.12	0.17
54	7.716	0.145	2.17	94	-1.3	100	84	-0.090	9.99	0.06
55	7.863	0.147	2.17	94	-3.2	101	84	-0.090	9.46	0.04
56	8.008	0.145	2.18	94	-2.57	99	85	-0.070	9.04	0.04
57	8.155	0.147	2.17	95	-3.27	100	86	-0.080	8.96	0.04
58	8.300	0.145	2.18	95	-0.74	100	87	-0.080	8.95	0.01
59	8.447	0.147	2.18	95	-1.15	105	87	-0.090	8.91	0.04
60	8.593	0.146	2.18	95	-1.55	102	86	-0.090	8.85	0.05
61	8.740	0.147	2.17	95	-1.4	105	86	-0.090	8.88	0.05
62	8.885	0.145	2.17	96	-2.14	102	86	-0.090	9.18	0.02
63	9.033	0.148	2.17	96	-2.38	106	85	-0.090	9.45	0.02

BOX B TEST DATA - ASTM E3053 / ASTM E2515

Client: FPI
Model: F1150
Run #: 1

Job #: 19-496
Tracking #: 0031
Technician: SJB
Date: 7/22/2019

	Particulate Sampling Data							Flue Gas Data		
Elapsed Time (min)	Gas Meter (ft^3)	Sample Rate (cfm)	Orifice dH (in H_2O)	Meter Temp (°F)	Meter Vacuum (in Hg)	Pro. Rate (%)	Filter (°F)	Flue Draft (in H_2O)	CO_2 (%)	CO (%)
64	9.178	0.145	2.19	96	-1.73	100	84	-0.080	9.78	0.07
65	9.326	0.148	2.18	96	-1.91	106	84	-0.090	9.81	0.05
66	9.471	0.145	2.17	96	-0.75	104	86	-0.080	9.96	0.05
67	9.619	0.148	2.16	97	-1.83	101	87	-0.080	9.97	0.04
68	9.764	0.145	2.17	97	-0.78	100	87	-0.090	10.27	0.09
69	9.911	0.147	2.17	97	-2.93	102	87	-0.080	10.58	0.06
70	10.056	0.145	2.16	97	-2.16	100	86	-0.080	10.59	0.06
71	10.204	0.148	2.16	97	-2.66	100	86	-0.080	11.47	0.23
72	10.347	0.143	2.13	97	-3.31	100	85	-0.090	11.79	0.32
73	10.495	0.148	2.15	98	-3.06	99	85	-0.080	11.68	0.30
74	10.639	0.144	2.15	98	-1.26	99	85	-0.090	10.89	0.14
75	10.787	0.148	2.15	98	-3.15	106	85	-0.090	10.23	0.17
76	10.930	0.143	2.14	98	-0.98	97	87	-0.090	9.98	0.13
77	11.078	0.148	2.13	98	-3.35	101	87	-0.090	9.76	0.06
78	11.222	0.144	2.14	98	-0.97	104	87	-0.080	9.25	0.05
79	11.369	0.147	2.13	98	-3.1	103	87	-0.090	8.33	0.11
80	11.512	0.143	2.13	99	-2.82	101	86	-0.080	7.39	0.08
81	11.660	0.148	2.13	99	-1.47	102	85	-0.070	6.97	0.07
82	11.803	0.143	2.12	99	-3.26	97	85	-0.080	6.76	0.06
83	11.951	0.148	2.12	99	-1.01	102	85	-0.070	6.58	0.09
84	12.094	0.143	2.14	99	-3.12	97	85	-0.090	6.60	0.07
85	12.242	0.148	2.13	99	-0.85	100	86	-0.070	6.75	0.04
86	12.385	0.143	2.13	99	-1.09	96	87	-0.090	6.01	0.11
87	12.533	0.148	2.13	100	-0.86	104	87	-0.070	5.81	0.15
88	12.676	0.143	2.13	100	-1.59	96	87	-0.070	5.87	0.16
89	12.824	0.148	2.12	100	-2.25	102	87	-0.070	5.46	0.13
90	12.967	0.143	2.13	100	-0.84	95	86	-0.060	5.33	0.16
91	13.115	0.148	2.13	100	-0.9	102	85	-0.060	5.03	0.20
92	13.259	0.144	2.14	100	-1	99	85	-0.070	4.86	0.25
93	13.407	0.148	2.12	100	-3.18	102	85	-0.070	4.92	0.24
94	13.551	0.144	2.14	100	-2.68	97	85	-0.070	4.67	0.28
95	13.699	0.148	2.14	100	-1.06	101	86	-0.070	4.75	0.25

BOX B TEST DATA - ASTM E3053 / ASTM E2515

Client: FPI
Model: F1150
Run #: 1

Job #: 19-496
Tracking #: 0031
Technician: SJB
Date: 7/22/2019

	Particulate Sampling Data							Flue Gas Data		
Elapsed Time (min)	Gas Meter (ft^3)	Sample Rate (cfm)	Orifice dH (in H_2O)	Meter Temp (°F)	Meter Vacuum (in Hg)	Pro. Rate (%)	Filter (°F)	Flue Draft (in H_2O)	CO_2 (%)	CO (%)
96	13.843	0.144	2.13	100	-2.8	97	87	-0.070	4.64	0.27
97	13.990	0.147	2.12	101	-0.8	102	86	-0.070	4.80	0.21
98	14.134	0.144	2.13	101	-2.48	97	86	-0.070	4.85	0.25
Avg/Tot	14.134	0.144	2.12	91	-1.80	100	85	-0.075	7.78	0.19

WOODSTOVE SURFACE TEMPERATURE DATA

Client: FPI
Model: F1150
Run #: 1

Job #: 19-496
Tracking #: 0031
Technician: SJB
Date: 7/22/2019

	Temperature Data (°F)						
Elapsed Time (min)	FB Left	FB Right	FB Back	FB Top	FB Bottom	Stove Surface Average	Catalyst Exit
0	79	79	80	78	79	79.0	N/A
1	80	80	82	81	79	80.4	N/A
2	81	83	94	94	79	86.2	N/A
3	84	91	112	125	79	98.2	N/A
4	91	101	125	153	79	109.8	N/A
5	99	110	134	163	80	117.2	N/A
6	108	120	140	161	80	121.8	N/A
7	117	127	144	157	81	125.2	N/A
8	124	133	149	159	81	129.2	N/A
9	132	138	154	164	82	134.0	N/A
10	139	144	161	174	83	140.2	N/A
11	149	150	170	185	83	147.4	N/A
12	158	156	180	196	84	154.8	N/A
13	169	164	191	207	85	163.2	N/A
14	180	173	202	215	86	171.2	N/A
15	193	182	214	216	87	178.4	N/A
16	205	191	227	223	88	186.8	N/A
17	216	201	239	224	89	193.8	N/A
18	226	210	250	234	91	202.2	N/A
19	234	219	259	237	93	208.4	N/A
20	242	228	263	232	94	211.8	N/A
21	248	235	269	230	95	215.4	N/A
22	254	240	277	231	97	219.8	N/A
23	259	245	286	238	99	225.4	N/A
24	265	250	294	241	100	230.0	N/A
25	271	255	303	258	102	237.8	N/A
26	279	262	310	264	104	243.8	N/A
27	288	269	317	275	106	251.0	N/A
28	298	279	322	287	107	258.6	N/A
29	308	290	328	293	109	265.6	N/A
30	319	300	335	291	111	271.2	N/A
31	329	309	342	294	112	277.2	N/A
32	339	316	349	300	116	284.0	N/A
33	347	323	352	282	118	284.4	N/A
34	351	326	352	284	119	286.4	N/A
35	353	327	352	288	121	288.2	N/A
36	354	329	353	298	123	291.4	N/A
37	355	331	355	321	125	297.4	N/A
38	356	335	358	328	126	300.6	N/A
39	357	337	361	340	128	304.6	N/A
40	360	340	364	352	129	309.0	N/A
41	363	344	367	357	130	312.2	N/A
42	367	348	371	374	132	318.4	N/A
43	371	351	375	389	133	323.8	N/A
44	376	356	378	399	135	328.8	N/A
45	381	361	382	420	136	336.0	N/A
46	386	366	387	425	138	340.4	N/A
47	392	371	351	464	138	343.2	N/A

WOODSTOVE SURFACE TEMPERATURE DATA

Client: FPI
Model: F1150
Run #: 1

Job #: 19-496
Tracking #: 0031
Technician: SJB
Date: 7/22/2019

	Temperature Data (°F)						
Elapsed Time (min)	FB Left	FB Right	FB Back	FB Top	FB Bottom	Stove Surface Average	Catalyst Exit
48	398	375	339	466	139	343.4	N/A
49	404	383	330	479	141	347.4	N/A
50	410	386	325	480	142	348.6	N/A
51	416	395	322	459	142	346.8	N/A
52	422	399	318	456	144	347.8	N/A
53	428	404	317	458	145	350.4	N/A
54	434	409	315	464	146	353.6	N/A
55	439	414	314	460	147	354.8	N/A
56	445	416	313	457	148	355.8	N/A
57	451	420	313	444	149	355.4	N/A
58	456	423	312	445	150	357.2	N/A
59	461	427	311	432	152	356.6	N/A
60	467	429	310	441	152	359.8	N/A
61	472	430	310	421	154	357.4	N/A
62	477	434	309	430	154	360.8	N/A
63	482	434	309	440	155	364.0	N/A
64	486	438	309	439	157	365.8	N/A
65	492	440	310	442	158	368.4	N/A
66	497	442	310	445	159	370.6	N/A
67	501	441	311	450	160	372.6	N/A
68	505	447	312	458	162	376.8	N/A
69	510	451	313	463	163	380.0	N/A
70	515	454	316	467	164	383.2	N/A
71	520	455	320	475	166	387.2	N/A
72	525	459	323	479	167	390.6	N/A
73	530	462	327	492	168	395.8	N/A
74	535	467	332	488	170	398.4	N/A
75	540	469	335	483	171	399.6	N/A
76	545	477	337	479	171	401.8	N/A
77	549	479	341	475	172	403.2	N/A
78	552	487	344	465	174	404.4	N/A
79	555	488	348	460	176	405.4	N/A
80	556	492	353	451	178	406.0	N/A
81	556	497	356	438	179	405.2	N/A
82	557	501	357	423	181	403.8	N/A
83	555	502	357	408	182	400.8	N/A
84	555	501	356	395	184	398.2	N/A
85	553	503	355	380	186	395.4	N/A
86	551	504	353	382	186	395.2	N/A
87	549	503	351	370	188	392.2	N/A
88	546	505	348	360	189	389.6	N/A
89	544	503	346	353	190	387.2	N/A
90	541	502	344	351	191	385.8	N/A
91	538	501	342	342	192	383.0	N/A
92	534	498	338	334	194	379.6	N/A
93	530	499	335	326	196	377.2	N/A
94	526	495	332	323	196	374.4	N/A
95	522	491	329	317	196	371.0	N/A

WOODSTOVE SURFACE TEMPERATURE DATA

Client: FPI
Model: F1150
Run #: 1

Job #: 19-496
Tracking #: 0031
Technician: SJB
Date: 7/22/2019

	Temperature Data (°F)						
Elapsed Time (min)	FB Left	FB Right	FB Back	FB Top	FB Bottom	Stove Surface Average	Catalyst Exit
96	518	490	327	314	197	369.2	N/A
97	513	486	324	304	198	365.0	N/A
98	510	483	322	301	199	363.0	N/A
Average	381	352	298	341	137	302	N/A

LAB SAMPLE DATA - ASTM E2515

Client: FPI
Model: F1150
Run #: 1

Job #: 19-496
Tracking #: 0031
Technician: SJB
Date: 7/22/2019

	Sample ID	Tare, mg	Total, mg	Final, mg	Catch, mg
Train A Filters - First Hour	T257	86.9	174.4	177.8	3.4
	T258	87.5			
Train A Filters - Remainder	T259	87.7	175.6	176.5	0.9
	T264	87.9			
Train A Probe	8A	116824.3	116824.3	116824.2	0.0*
Train A O-Rings	8A	3549.0	3549.0	3549.3	0.3
Train B Filters	T260	87.9	262.9	267.3	4.4
	T261	86.8			
	T263	88.2			
Train B Probe	8B	116826.2	116826.2	116826.2	0.0
Train B O-Rings	8B	3582.3	3582.3	3583.0	0.7
Background Filter	T262	88.5	88.5	88.6	0.1

**Negative value corrected to zero*

Placed in Dessicator on:	7/22 - 15:00

Train A Filters - First Hour	177.8	7/25 7:40	177.8	7/26 8:28				
Train A Filters - Remainder	176.4	7/25 7:39	176.5	7/26 8:28				
Train A Probe	116824.1	7/25 7:39	116824.2	7/26 8:28				
Train A O-Rings	3549.3	7/25 7:39	3549.3	7/26 8:28				
Train B Filters	267.2	7/25 7:39	267.3	7/26 8:28				
Train B Probe	116826.1	7/25 7:40	116826.2	7/26 8:28				
Train B O-Rings	3582.9	7/25 7:40	3583.0	7/26 8:29				
Background Filter	88.6	7/25 7:40	88.6	7/26 8:29				

1st hour Sub-Total, mg:	3.4
Remainder Sub-Total, mg:	1.2
Train 1 Aggregate, mg:	**4.6**
Train 2 Aggregate, mg:	**5.1**
Ambient Aggregate, mg:	0.1

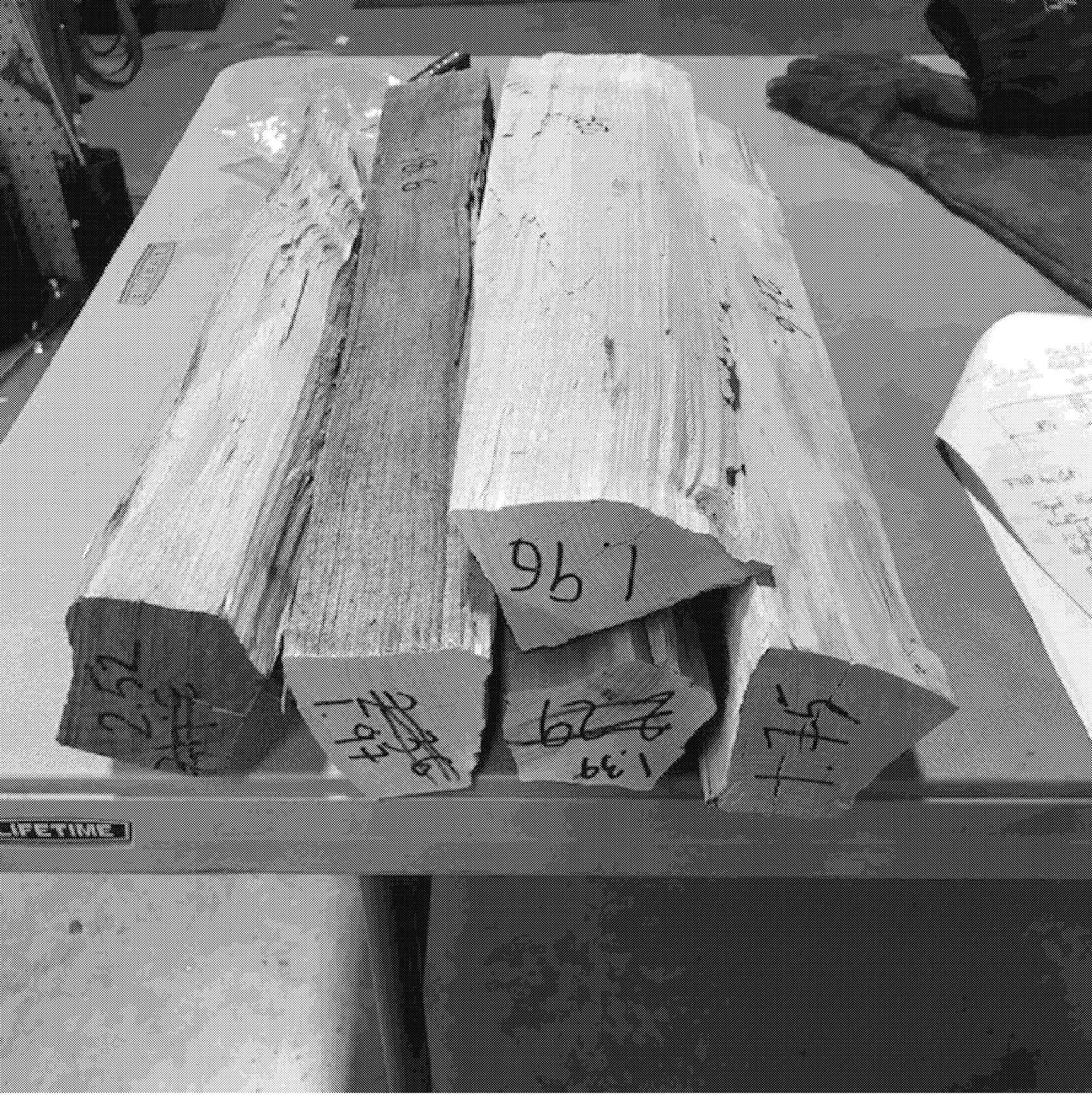
LIFETIME

4
0.22
5
10.22

ASTM E3053 Wood Heater Run Sheets

Client: FPI Job Number: 19-496 Tracking #: 0031
Model: F1150 Run Number: 1 Test Date: 7/22/2019

Wood Heater Run Notes

Pre-Test Notes
Pre-Test Start Time: N/A
Air Control Setting: N/A

Time	Notes
N/A	High fire test beings from cold start per ASTM E3053

Test Notes
Test Burn Start Time: 13:03
Air Control Setting: Full Open

Time	Notes
0 min	Started with 0.9 lbs of kindling, propane torch for 20 seconds, door left cracked open.
2 min	Door closed.
5 min	@0.2 lbs added remaining kindling and a couple start-up pieces, 1.4 lbs total
18 min	@0.5 lbs, added remaining start-up fuel, 1.7 lbs.
31 min	@1.1 lbs, leveled coal bed, zeroed scale, and loaded high fire fuel load, door closed in 40 seconds.
34 min	Changed front filter on both sample trains due to clogging.
46 min	Turned fan on high.
60 min	Changed 1-hr filter.
98 min	End of test.

Test Burn End Time: 14:41

Flue Gas Concentration Measurement

Calibration Gas Values: Span Gas CO_2 (%): 17.00 CO (%): 4.310
Mid Gas CO_2 (%): 10.00 CO (%): 2.51

Calibration Results:

	Pre Test			Post Test		
	Zero	Mid	Span	Zero	Mid	Span
Time	11:52	11:56	11:54	15:13	15:15	15:17
CO_2	0.00	10.06	17.00	-0.02	10.00	16.99
CO	0.000	2.484	4.310	-0.020	2.453	4.276

Flue Gas Probe Leak Check: Initial: No Leakage Final: No Leakage

Technician Signature: Date: 7/22/2019

ED_005996_00000513-00091

ASTM E3053 Wood Heater Run Sheets

Client: FPI | Job Number: 19-496 | Tracking #: 0031
Model: F1150 | Run Number: 1 | Test Date: 7/22/2019

Test Photos

Kindling Fuel Load

Start-up Fuel Load

High Fire Fuel Load

Residual Start-up Fuel Coal Bed

Technician Signature: _____ Date: 7/22/2019

ED_005996_00000513-00092

ASTM E3053 Wood Heater Run Sheets

Client: FPI Job Number: 19-496 Tracking #: 0031
Model: F1150 Run Number: 1 Test Date: 7/22/2019

High Fire Fuel Loaded

Residual High Fire Load Coal Bed

N/A

Low Fire Fuel Load

N/A

Low Fire Fuel Loaded

Technician Signature: Date: 7/22/2019

WOOD STOVE TEST DATA PACKET
ASTM E3053/E2515

Run 2 Data Summary

Client: FPI
Model: F1150
Job #: 19-496
Tracking #: 0031
Test Date: 7/23/2019

7/26/2019

Techician Signature | Date

ED_005996_00000513-00097

TEST RESULTS - ASTM E3053 / ASTM E2515

Client: FPI
Model: F1150
Run #: 2

Job #: 19-496
Tracking #: 0031
Technician: SJB
Date: 7/23/2019

Burn Rate (kg/hr):	0.94

	Ambient Sample	Sample Train A	Sample Train B	1st Hour Filter
Total Sample Volume (ft^3)	55.361	42.370	42.082	8.708
Average Gas Velocity in Dilution Tunnel (ft/sec)	17.57			
Average Gas Flow Rate in Dilution Tunnel (dscf/hr)	11502.3			
Average Gas Meter Temperature (°F)	78.0	97.8	96.2	84.3
Total Sample Volume (dscf)	53.989	40.361	40.076	8.499
Average Tunnel Temperature (°F)	99.5			
Total Time of Test (min)	284			
Total Particulate Catch (mg)	0.1	3.3	3.3	1.9
Particulate Concentration, dry-standard (g/dscf)	0.0000019	0.0000818	0.0000823	0.0002235
Total PM Emissions (g)	0.10	4.35	4.38	2.55
Particulate Emission Rate (g/hr)	0.02	0.92	0.93	2.55
Emissions Factor (g/kg)	-	0.97	0.98	-
Difference from Average Total Particulate Emissions (g)	-	0.02	0.02	-
Difference from Average Emissions Factor (g/kg)	-	0.00	0.00	-

Final Average Results	
Total Particulate Emissions (g)	4.37
Particulate Emission Rate (g/hr)	0.92
Emissions Factor (g/kg)	0.98
HHV Efficiency (%)	71.3%
LHV Efficiency (%)	76.3%
CO Emissions (g/min)	0.93

Quality Checks	Requirement	Observed	Result
Dual Train Precision	Each train within 7.5% of average emissions (in grams), or emission factors within 0.5 g/kg	See Above	OK
Filter Temps	>80 °F, <90 °F	Min: 83 / Max: 87	OK
Face Velocity	< 30 ft/min	8.4	OK
Leakage Rate	Less than 4% of average sample rate	0.002 cfm	OK
Ambient Temp	55-90 °F	Min: 76 / Max: 80	OK
Negative Probe Weight Evaluation	<5% of Total Catch	Probe Catch Not Negative	OK
Pro-Rate Variation	90% of readings between 90-110%; none greater than 120% or less than 80%	See Data Tabs	CHECK 10 MIN. INTERVAL PRO-RATES

B415.1 Efficiency Results

Manufacturer:	FPI
Model:	F1150
Date:	07/23/19
Run:	2
Control #:	19-496
Test Duration:	284
Output Category:	Low

Test Results in Accordance with CSA B415.1-09

	HHV Basis	LHV Basis
Overall Efficiency	71.3%	76.3%
Combustion Efficiency	96.4%	96.4%
Heat Transfer Efficiency	74.0%	79.1%

Output Rate (kJ/h)	13,469	12,777	**(Btu/h)**
Burn Rate (kg/h)	0.95	2.09	**(lb/h)**
Input (kJ/h)	18,892	17,921	**(Btu/h)**

Test Load Weight (dry kg)	4.48	9.87	**dry lb**
MC wet (%)	17.72		
MC dry (%)	21.53		
Particulate (g)	4.37		
CO (g)	264		
Test Duration (h)	4.73		

Emissions	Particulate	CO
g/MJ Output	0.07	4.14
g/kg Dry Fuel	0.97	58.87
g/h	0.92	55.72
g/min	0.02	0.93
lb/MM Btu Output	0.16	9.61

Air/Fuel Ratio (A/F)	21.72

VERSION: **2.2** **12/14/2009**

HIGH FIRE FUEL LOAD DATA - ASTM E3053

Client:	FPI	Job #:	19-496
Model:	F1150	Tracking #	0031
Run #:	2	Technician:	SJB
		Date:	7/23/2019

Nominal Loading Density (lbs/ft^3, wet basis):	10		
Usable Firebox Volume (ft^3):	0.98		
Target Load Weight (lbs):	9.80		
Total Load Weight Range (lbs):	9.30	to	10.30
Core Load Weight Range (lbs):	4.40	to	6.40
Remainder Load Weight Range (lbs):	3.40	to	5.40
Core Load Piece Range (lbs):	1.50	to	2.50
Remainder Load Piece Range (lbs):	1.00	to	5.40
Max Allowable Kindling Weight (lbs):	1.90		
Max Allowable Start-up Fuel Weight (lbs):	2.85		

CORE LOAD DATA

				Fuel Piece Moisture Readings (%DB)					Dry Weight	
Piece #	Length (in)	Weight (lbs)	Within Spec?	1	2	3	Ave.	Within Spec?	lbs	kg
1	17.00	1.68	In Range	20.7	19.7	18.8	19.7	In Range	1.40	0.64
2	17.00	1.88	In Range	21.3	20.0	19.9	20.4	In Range	1.56	0.71
3	17.00	1.66	In Range	19.2	24.3	18.6	20.7	In Range	1.38	0.62
Core Load Wt. (lbs)		5.22	In Range							

REMAINDER LOAD DATA (1 to 3 Pieces)

				Fuel Piece Moisture Readings (%DB)					Dry Weight	
Piece #	Length (in)	Weight (lbs)	Within Spec?	1	2	3	Ave.	Within Spec?	lbs	kg
1	17.00	1.38	In Range	23.6	26.8	19.7	23.4	In Range	1.12	0.51
2	17.00	1.34	In Range	25.4	22.3	21.9	23.2	In Range	1.09	0.49
3	17.00	1.57	In Range	19.2	24.3	18.6	20.7	In Range	1.30	0.59
Remainder Load (lbs)		4.29	In Range							

Total Load Weight (lbs):	9.51	In Range	
Core Load % of Total Weight:	55%	In Range	45-65%
Remainder % of Total Weight:	45%	In Range	35-55%
Total Load % of Target Weight:	97%	In Range	95-105%
Actual Fuel Loading Density (lb/ft3):	9.7		
Total Load Average Moisture Content (%DB):	21.2	In Range	19-25%
Total Load Average Moisture Content (%WB):	17.5		
Total Test Load Weight (dry basis):	7.85 lbs	3.56 kg	

KINDLING AND START-UP FUEL

		Kindling Moisture Readings (%DB)					Dry Weight	
Kindling Weight (lbs)	Within Spec?	1	2	3	Avg.	Within Spec?	lbs	kg
1.52	In Range	10	10	10	10.0	In Range	1.38	0.63

		Start-up Moisture Readings (%DB)					Dry Weight	
Start-up Fuel Wt. (lb)	Within Spec?	1	2	3	Avg.	Within Spec?	lbs	kg
2.55	In Range	21.9	19.8	18.7	20.1	In Range	2.12	0.96

TEST FUEL LOADING RANGE

Allowable Residual Start-up Fuel Range (lb):	1.0	to	1.9	
Actual Residual Start-up Fuel Weight (lb):		1.0		In Range

LOW & MEDIUM FIRE FUEL LOAD DATA - ASTM E3053

Client:	FPI	Job #:	19-496
Model:	F1150	Tracking #	0031
Run #:	2	Technician:	SJB
		Date:	7/23/2019

Nominal Loading Density (lbs/ft^3, wet basis):	12		
Usable Firebox Volume (ft^3):	0.98		
Target Load Weight (lbs):	11.76		
Total Load Weight Range (lbs):	11.17	to	12.35
Core Load Weight Range (lbs):	5.29	to	7.64
Remainder Load Weight Range (lbs):	4.12	to	6.47
Core Load Piece Range (lbs):	1.76	to	2.94
Remainder Load Piece Range (lbs):	1.18	to	3.53

CORE LOAD DATA

				Fuel Piece Moisture Readings (%DB)					Dry Weight	
Piece #	Length (in)	Weight (lbs)	Within Spec?	1	2	3	Ave.	Within Spec?	lbs	kg
1	17.00	2.21	In Range	22.9	18.7	23.4	21.7	In Range	1.82	0.82
2	17.00	2.93	In Range	19.8	18.9	22.8	20.5	In Range	2.43	1.10
3	17.00	2.16	In Range	23.7	22.4	18.6	21.6	In Range	1.78	0.81
Core Load Wt. (lbs)		7.30	In Range							

REMAINDER LOAD DATA (2 to 3 Pieces)

				Fuel Piece Moisture Readings (%DB)					Dry Weight	
Piece #	Length (in)	Weight (lbs)	Within Spec?	1	2	3	Ave.	Within Spec?	lbs	kg
1	17.00	3.04	In Range	19.6	25.7	24.3	23.2	In Range	2.47	1.12
2	17.00	1.62	In Range	21.6	20.1	18.6	20.1	In Range	1.35	0.61
3			NA				NA	NA	NA	NA
Remainder Load (lbs)		4.66	In Range							

Remainder Load Small/Large Piece Weight Ratio:	53%	In Range	≤ 67%
Total Load Weight (lbs):	11.96	In Range	
Core Load % of Total Weight:	61%	In Range	45-65%
Remainder % of Total Weight:	39%	In Range	35-55%
Total Load % of Target Weight:	102%	In Range	95-105%
Actual Fuel Loading Density (lb/ft3):	12.2		
Total Load Average Moisture Content (%DB):	21.5	In Range	19-25%
Total Load Average Moisture Content (%WB):	17.7		
Total Test Load Weight (dry basis):	9.84 lbs		4.46 kg

TEST FUEL LOADING RANGE

Allowable Charcoal Bed Weight Range (lb):	1.2	to	2.3	
Actual Charcoal Bed Wt. (lb):		1.8		In Range

TEST END POINT

Actual Fuel Load Ending Weight (lb):	0.0	Valid Test (≥90%)

Total Fuel Burned During Test Run:	12.0	lbs, wet basis
	9.8	lbs, dry basis
	4.46	kg, dry basis

DILUTION TUNNEL & MISC. DATA - ASTM E3053 / E2515

Client:	FPI	Job #:	19-496
Model:	F1150	Tracking #:	0031
Run #:	2	Technician:	SJB
Test Start Time:	11:28	Date:	7/23/2019
Test Type:	Low Fire		

Recording Interval (min):	1
Total Sampling Time (min):	284

	Pre-Test	Post Test	Avg.
Barometric Pressure (in. Hg)	30	29.97	29.99
Relative Humidity (%)	44.5	31.9	
Room Air Velocity (ft/min)	0	0	
Scale Audit (lbs)	10.0	10.0	
Ambient Sample Volume:		55.361	ft^3

Meter Box γ Factor:	0.999	(A)
Meter Box γ Factor:	0.996	(B)
Meter Box γ Factor:	0.992	(Ambient)

Induced Draft Check (in. H_2O):	0
Smoke Capture Check (%):	100%
Date Flue Pipe Last Cleaned:	7/22/2019

Sample Train Post-Test Leak Checks

(A)	0.001	cfm @	-11	in. Hg
(B)	0.002	cfm @	-12	in. Hg
(Ambient)	0.003	cfm @	-14	in. Hg

DILUTION TUNNEL FLOW

Traverse Data

Point	dP (in H_2O)	Temp (°F)
1	0.058	125
2	0.078	125
3	0.074	125
4	0.058	125
5	0.050	125
6	0.076	125
7	0.078	125
8	0.056	125
Center	0.082	125

Static Pressure: -0.210 in. H_2O

Dilution Tunnel H_2O:	2.00	percent
Tunnel Diameter:	6	inches
Pitot Tube Cp:	0.99	[unitless]
Dilution Tunnel MW(dry):	29.00	lb/lb-mole
Dilution Tunnel MW(wet):	28.78	lb/lb-mole
Tunnel Area:	0.1963	ft^2
V_{strav}:	18.08	ft/sec
V_{scent}:	19.95	ft/sec
F_p:	0.906	[ratio]
Initial Tunnel Flow:	186.3	scf/min

TEST FUEL PROPERTIES

ASTM 3053-17 - Table A1.1 Fuel Properties by Fuel Species

Select Fuel Type	Species	%C	%H	%O	%Ash	MJ/kg	BTU/lb
	Ash, White	49.70	6.90	43.00	0.30	20.75	8927
	Beech	48.70	5.80	44.70	0.60	18.80	8088
	Birch, Sweet	49.80	6.50	43.40	0.30	20.12	8656
	Birch, Yellow	49.80	6.50	43.40	0.30	20.12	8656
	Doug Fir (Coast, Interior West/North)	48.73	6.87	43.90	0.50	19.81	8522
	Doug Fir (Interioir South)	48.73	6.87	43.90	0.50	19.81	8522
	Elm, Rock	50.40	6.60	42.30	0.70	20.49	8815
	Elm, Soft	50.40	6.60	42.30	0.70	20.49	8815
	Gum, Red	50.88	6.06	41.57	1.28	19.72	8478
	Larch, Western	50.54	6.36	42.40	0.70	17.58	7558
X	Maple, Hard	50.64	6.02	41.74	1.35	19.96	8587
	Maple, Sugar	50.64	6.02	41.74	1.35	19.96	8587
	Oak, Red	49.50	6.62	43.70	0.20	20.20	8690
	Oak, White	50.40	6.59	42.70	0.20	20.50	8819
	Pine, Southern	52.60	7.00	40.10	1.31	22.30	9587
	Pine, Southern Long Leaf	52.60	7.02	40.10	1.30	22.30	9594

WOODSTOVE PREBURN DATA

Client: FPI
Model: F1150
Run #: 2

Job #: 19-496
Tracking #: 0031
Technician: SJB
Date: 7/23/2019

Recording Interval (min): 1
Run Time (min): 82

			Temperatures (°F)							
Elapsed Time (min)	Scale Reading (lbs)	Flue Draft (in H_2O)	FB Left	FB Right	FB Back	FB Top	FB Bottom	Stove Surface Average	Flue	Ambient
0	0.9	-0.017	73	73	74	73	73	73.2	73	72
1	0.8	-0.035	74	74	79	78	73	75.6	137	72
2	0.6	-0.068	76	78	96	91	73	82.8	268	72
3	0.4	-0.062	82	87	113	123	74	95.8	343	72
4	0.3	-0.064	90	99	124	157	74	108.8	352	72
5	1.9	-0.044	100	110	132	162	74	115.6	355	72
6	1.7	-0.067	110	121	138	169	75	122.6	417	72
7	1.4	-0.079	121	130	150	187	76	132.8	451	72
8	1.3	-0.074	134	142	164	211	76	145.4	438	72
9	1.1	-0.071	149	154	179	238	77	159.4	459	72
10	0.9	-0.081	164	169	197	257	78	173.0	476	73
11	0.6	-0.091	180	186	216	273	79	186.8	473	73
12	0.6	-0.083	196	202	236	286	80	200.0	466	73
13	0.5	-0.070	210	219	252	291	82	210.8	454	73
14	2.0	-0.082	223	234	266	289	83	219.0	474	73
15	1.7	-0.078	234	250	275	303	85	229.4	528	73
16	1.5	-0.089	246	263	284	327	87	241.4	527	73
17	1.3	-0.091	258	277	293	349	89	253.2	541	73
18	1.1	-0.084	271	290	304	376	91	266.4	543	73
19	9.7	-0.081	285	303	317	393	94	278.4	599	73
20	10.4	-0.091	299	316	328	376	96	283.0	471	73
21	10.1	-0.094	310	328	335	368	98	287.8	453	74
22	10.0	-0.079	316	334	341	364	100	291.0	471	74
23	9.9	-0.084	320	340	347	373	102	296.4	476	74
24	9.8	-0.090	324	344	351	383	104	301.2	490	74
25	9.6	-0.086	326	348	354	401	107	307.2	505	74
26	9.4	-0.096	329	352	358	399	109	309.4	523	74
27	9.2	-0.091	333	357	361	412	110	314.6	543	74
28	9.0	-0.086	337	363	365	432	112	321.8	556	74
29	8.8	-0.078	341	369	369	446	114	327.8	565	74
30	8.5	-0.101	345	376	373	460	116	334.0	574	74
31	8.4	-0.094	351	382	377	474	118	340.4	581	74
32	8.1	-0.087	356	388	383	495	120	348.4	589	74
33	7.8	-0.103	362	396	351	523	121	350.6	606	75
34	7.6	-0.091	369	403	338	531	123	352.8	603	75
35	7.4	-0.097	376	411	329	545	124	357.0	605	75
36	7.1	-0.097	384	417	325	563	126	363.0	612	75
37	6.9	-0.094	392	425	321	565	127	366.0	597	75
38	6.7	-0.089	400	435	320	553	128	367.2	583	75
39	6.5	-0.087	408	441	320	552	130	370.2	581	75
40	6.3	-0.094	416	447	319	554	131	373.4	582	75
41	6.2	-0.100	424	452	320	561	133	378.0	568	75
42	6.0	-0.095	431	458	320	552	134	379.0	558	76
43	5.7	-0.085	438	462	321	548	135	380.8	547	76

WOODSTOVE PREBURN DATA

Client: FPI
Model: F1150
Run #: 2

Job #: 19-496
Tracking #: 0031
Technician: SJB
Date: 7/23/2019

Recording Interval (min): 1
Run Time (min): 82

			Temperatures (°F)							
Elapsed Time (min)	Scale Reading (lbs)	Flue Draft (in H_2O)	FB Left	FB Right	FB Back	FB Top	FB Bottom	Stove Surface Average	Flue	Ambient
44	5.7	-0.087	445	466	321	547	136	383.0	539	76
45	5.5	-0.085	451	470	323	536	138	383.6	535	76
46	5.4	-0.077	456	472	323	526	139	383.2	520	76
47	5.3	-0.075	461	475	323	515	140	382.8	506	76
48	5.2	-0.069	465	479	323	505	142	382.8	495	76
49	5.0	-0.078	469	481	322	494	143	381.8	493	76
50	5.0	-0.064	472	480	321	486	146	381.0	486	76
51	4.8	-0.074	474	481	320	479	146	380.0	483	76
52	4.7	-0.075	476	480	318	470	148	378.4	480	76
53	4.6	-0.066	478	482	317	473	150	380.0	479	76
54	4.5	-0.084	480	481	316	467	151	379.0	476	76
55	4.4	-0.097	482	481	314	468	154	379.8	475	76
56	4.3	-0.071	483	479	314	466	155	379.4	484	76
57	4.2	-0.087	484	483	313	473	157	382.0	492	76
58	4.0	-0.080	485	485	314	462	156	380.4	499	76
59	3.9	-0.082	488	485	314	471	157	383.0	505	76
60	3.8	-0.068	490	490	314	473	160	385.4	506	76
61	3.6	-0.077	492	492	315	472	160	386.2	504	77
62	3.5	-0.084	495	495	316	477	161	388.8	500	76
63	3.4	-0.084	498	496	317	476	162	389.8	494	76
64	3.3	-0.073	501	495	319	488	165	393.6	490	77
65	3.2	-0.082	503	496	320	488	165	394.4	483	77
66	3.1	-0.076	506	495	321	486	165	394.6	482	77
67	3.0	-0.085	508	495	324	483	167	395.4	479	77
68	3.0	-0.078	510	495	325	478	168	395.2	475	77
69	2.9	-0.079	511	493	326	472	169	394.2	470	76
70	2.8	-0.076	513	494	328	474	171	396.0	468	77
71	2.7	-0.085	514	497	332	490	171	400.8	552	77
72	2.5	-0.087	516	497	334	509	172	405.6	539	77
73	2.3	-0.081	517	499	336	508	172	406.4	535	77
74	2.2	-0.072	519	502	337	512	174	408.8	516	77
75	2.1	-0.075	522	504	337	502	174	407.8	496	77
76	2.1	-0.080	526	505	338	489	175	406.6	478	77
77	2.0	-0.079	528	505	337	485	176	406.2	459	76
78	2.0	-0.091	530	506	336	469	178	403.8	447	77
79	1.9	-0.067	532	506	336	460	178	402.4	438	77
80	1.9	-0.071	532	505	335	447	179	399.6	428	77
81	1.8	-0.076	532	504	334	439	181	398.0	421	77
82	1.8	-0.075	531	499	332	430	182	394.8	412	77

BOX A TEST DATA - ASTM E3053 / ASTM E2515

Client: FPI
Model: F1150
Run #: 2

Job #: 19-496
Tracking #: 0031
Technician: SJB
Date: 7/23/2019

	Particulate Sampling Data							Fuel Weight (lb)		Temperature Data (°F)			
Elapsed Time (min)	Gas Meter (ft^3)	Sample Rate (cfm)	Dilution Tunnel dP (in H_2O)	Orifice dH (in H_2O)	Meter Temp (°F)	Meter Vacuum (in Hg)	Pro. Rate (%)	Scale Reading	Weight Change	Dilution Tunnel	Flue	Filter	Ambient
0	0.000		0.079	0.00	77	-0.1		12.0		121	403	85	77
1	0.103	0.103	0.079	2.31	77	-0.85	74	11.9	-0.1	126	373	85	77
2	0.248	0.145	0.073	2.28	77	0	109	11.8	-0.1	125	411	85	77
3	0.395	0.147	0.088	2.24	77	0	101	11.7	-0.1	128	461	85	77
4	0.538	0.143	0.083	2.20	77	0	101	11.4	-0.3	129	496	85	77
5	0.684	0.146	0.071	2.20	77	0	112	11.2	-0.2	132	519	85	77
6	0.825	0.141	0.074	2.17	77	-2.22	106	11.1	-0.1	137	549	85	77
7	0.973	0.148	0.081	2.29	77	-1.75	106	10.9	-0.2	130	539	85	77
8	1.117	0.144	0.076	2.30	77	-1.24	106	10.7	-0.2	125	490	85	77
9	1.266	0.149	0.077	2.26	78	-2.52	108	10.6	-0.1	122	465	85	77
10	1.410	0.144	0.083	2.26	78	-2.53	101	10.4	-0.2	120	452	85	77
11	1.559	0.149	0.084	2.26	78	-1.31	103	10.2	-0.2	120	448	85	77
12	1.703	0.144	0.080	2.26	78	-2.49	102	10.2	0	119	445	85	77
13	1.852	0.149	0.075	2.25	79	-1.23	109	10.1	-0.1	119	444	85	77
14	1.996	0.144	0.078	2.26	79	-2.74	103	9.9	-0.2	119	450	85	77
15	2.145	0.149	0.085	2.25	79	-1.44	102	9.8	-0.1	118	453	85	77
16	2.288	0.143	0.087	2.25	79	0	97	9.7	-0.1	116	448	85	77
17	2.437	0.149	0.080	2.24	80	-0.97	105	9.5	-0.2	117	446	85	77
18	2.581	0.144	0.083	2.25	80	-1.58	100	9.3	-0.2	116	445	85	77
19	2.730	0.149	0.076	2.23	80	-1.18	108	9.2	-0.1	116	442	85	77
20	2.873	0.143	0.083	2.24	81	-0.14	99	9.1	-0.1	117	448	85	77
21	3.022	0.149	0.082	2.23	81	-1.05	104	9.0	-0.1	116	447	85	77
22	3.165	0.143	0.082	2.21	81	-2.24	100	8.8	-0.2	115	449	85	76
23	3.314	0.149	0.082	2.23	82	-0.04	104	8.7	-0.1	116	451	85	76
24	3.457	0.143	0.079	2.22	82	-0.08	101	8.5	-0.2	116	450	85	77
25	3.606	0.149	0.088	2.21	83	-0.22	100	8.4	-0.1	116	453	85	77
26	3.749	0.143	0.078	2.22	83	-0.75	102	8.3	-0.1	116	449	85	77
27	3.898	0.149	0.082	2.22	83	0	103	8.1	-0.2	115	443	85	77
28	4.041	0.143	0.078	2.21	84	0	101	8.0	-0.1	115	443	85	77
29	4.190	0.149	0.093	2.21	84	-2.4	97	7.9	-0.1	115	445	85	77
30	4.333	0.143	0.080	2.21	84	-0.25	100	7.7	-0.2	115	446	85	77
31	4.483	0.150	0.083	2.21	85	-1.67	103	7.5	-0.2	115	443	85	77
32	4.626	0.143	0.081	2.21	85	-1.29	99	7.4	-0.1	115	446	85	77

BOX A TEST DATA - ASTM E3053 / ASTM E2515

Client: FPI
Model: F1150
Run #: 2

Job #: 19-496
Tracking #: 0031
Technician: SJB
Date: 7/23/2019

	Particulate Sampling Data							Fuel Weight (lb)		Temperature Data (°F)			
Elapsed Time (min)	Gas Meter (ft^3)	Sample Rate (cfm)	Dilution Tunnel dP (in H_2O)	Orifice dH (in H_2O)	Meter Temp (°F)	Meter Vacuum (in Hg)	Pro. Rate (%)	Scale Reading	Weight Change	Dilution Tunnel	Flue	Filter	Ambient
33	4.775	0.149	0.085	2.21	85	-0.52	101	7.3	-0.1	115	447	85	77
34	4.918	0.143	0.086	2.20	86	-0.28	96	7.2	-0.1	116	448	85	77
35	5.067	0.149	0.085	2.21	86	-0.05	101	7.0	-0.2	115	450	85	77
36	5.211	0.144	0.081	2.20	86	-0.01	100	6.9	-0.1	115	452	85	77
37	5.359	0.148	0.083	2.19	87	-1.55	101	6.8	-0.1	115	452	85	77
38	5.503	0.144	0.083	2.19	87	-2.52	99	6.6	-0.2	116	453	85	77
39	5.652	0.149	0.074	2.21	87	-1.05	108	6.5	-0.1	115	452	85	78
40	5.795	0.143	0.078	2.19	88	-2.55	101	6.3	-0.2	116	457	85	77
41	5.944	0.149	0.079	2.19	88	-2.61	104	6.2	-0.1	116	458	85	77
42	6.087	0.143	0.078	2.20	88	-2.56	101	6.1	-0.1	116	455	85	78
43	6.236	0.149	0.079	2.16	88	0	104	5.9	-0.2	116	458	84	78
44	6.379	0.143	0.085	2.19	89	-1.23	96	5.8	-0.1	115	455	85	78
45	6.527	0.148	0.081	2.18	89	-0.51	102	5.6	-0.2	116	458	84	78
46	6.670	0.143	0.085	2.15	89	-0.21	96	5.4	-0.2	117	460	84	78
47	6.818	0.148	0.076	2.17	90	-0.27	105	5.2	-0.2	116	456	84	78
48	6.961	0.143	0.080	2.16	90	-0.8	99	5.2	0	115	457	85	78
49	7.108	0.147	0.082	2.15	90	-0.09	101	5.0	-0.2	115	453	84	78
50	7.252	0.144	0.084	2.14	90	-2.83	97	5.0	0	115	444	84	78
51	7.398	0.146	0.082	2.16	91	-2.37	100	4.9	-0.1	113	435	84	78
52	7.543	0.145	0.081	2.15	91	-2.93	100	4.8	-0.1	113	423	84	78
53	7.689	0.146	0.085	2.15	91	-1.41	98	4.8	0	112	412	84	78
54	7.834	0.145	0.082	2.15	91	-1.24	99	4.7	-0.1	112	406	84	78
55	7.979	0.145	0.075	2.15	92	-0.11	103	4.6	-0.1	111	399	84	78
56	8.125	0.146	0.082	2.14	92	-0.16	99	4.5	-0.1	110	390	84	78
57	8.270	0.145	0.084	2.15	92	-1.65	97	4.5	0	109	384	84	78
58	8.416	0.146	0.085	2.16	92	-2.56	97	4.4	-0.1	109	382	84	77
59	8.561	0.145	0.084	2.16	93	-0.14	97	4.4	0	108	378	84	77
60	8.708	0.147	0.083	2.16	93	-2.57	99	4.3	-0.1	108	374	84	77
61	8.865	0.157	0.074	2.30	93	-2.66	112	4.2	-0.1	107	373	83	78
62	9.015	0.150	0.075	2.31	93	-1.49	106	4.1	-0.1	108	370	85	78
63	9.167	0.152	0.086	2.32	93	-0.02	100	4.1	0	107	369	86	78
64	9.314	0.147	0.085	2.30	94	-2.51	97	4.0	-0.1	107	360	86	78
65	9.467	0.153	0.076	2.30	94	-2.62	107	4.0	0	106	355	86	78

BOX A TEST DATA - ASTM E3053 / ASTM E2515

Client: FPI
Model: F1150
Run #: 2

Job #: 19-496
Tracking #: 0031
Technician: SJB
Date: 7/23/2019

	Particulate Sampling Data							Fuel Weight (lb)		Temperature Data (°F)			
Elapsed Time (min)	Gas Meter (ft^3)	Sample Rate (cfm)	Dilution Tunnel dP (in H_2O)	Orifice dH (in H_2O)	Meter Temp (°F)	Meter Vacuum (in Hg)	Pro. Rate (%)	Scale Reading	Weight Change	Dilution Tunnel	Flue	Filter	Ambient
66	9.615	0.148	0.079	2.31	94	-1.28	102	3.9	-0.1	106	348	85	78
67	9.769	0.154	0.088	2.31	94	-1.79	100	3.9	0	104	345	85	78
68	9.917	0.148	0.079	2.29	94	-2.15	102	3.7	-0.2	105	343	85	78
69	10.070	0.153	0.075	2.31	95	0	107	3.8	0.1	104	339	85	78
70	10.218	0.148	0.084	2.32	95	0	98	3.7	-0.1	104	336	85	78
71	10.370	0.152	0.083	2.31	95	-2.62	102	3.7	0	104	336	85	78
72	10.520	0.150	0.084	2.30	95	0	99	3.5	-0.2	103	334	85	78
73	10.671	0.151	0.078	2.30	95	-0.98	104	3.6	0.1	103	333	85	78
74	10.822	0.151	0.081	2.30	95	-0.07	102	3.5	-0.1	103	328	85	78
75	10.972	0.150	0.079	2.32	96	-2.5	102	3.5	0	103	328	85	78
76	11.123	0.151	0.077	2.29	96	-0.77	104	3.4	-0.1	103	329	85	78
77	11.271	0.148	0.080	2.29	96	-2.55	100	3.4	0	103	330	85	77
78	11.424	0.153	0.068	2.30	96	0	112	3.3	-0.1	102	329	85	78
79	11.572	0.148	0.089	2.29	96	0	95	3.3	0	102	326	85	78
80	11.725	0.153	0.083	2.28	96	-1.31	102	3.2	-0.1	101	327	85	77
81	11.873	0.148	0.081	2.27	96	-2.55	100	3.2	0	101	324	85	78
82	12.025	0.152	0.078	2.27	96	-1.43	104	3.1	-0.1	101	320	85	77
83	12.173	0.148	0.080	2.28	97	-2.69	100	3.1	0	100	314	85	78
84	12.324	0.151	0.081	2.28	97	-1.9	101	3.1	0	100	310	84	77
85	12.474	0.150	0.092	2.30	97	-2.66	94	3.0	-0.1	100	306	84	77
86	12.624	0.150	0.090	2.27	97	-1.92	96	3.0	0	100	306	84	77
87	12.776	0.152	0.078	2.28	97	-2.51	104	3.0	0	100	305	84	78
88	12.925	0.149	0.089	2.25	97	-0.05	95	2.9	-0.1	99	302	84	77
89	13.077	0.152	0.074	2.30	97	-2.61	107	3.0	0.1	99	303	84	77
90	13.224	0.147	0.079	2.27	97	-2.46	100	2.9	-0.1	99	303	84	77
91	13.377	0.153	0.084	2.28	98	0	101	2.8	-0.1	99	300	84	77
92	13.524	0.147	0.080	2.29	98	-2.69	99	2.8	0	99	299	84	77
93	13.678	0.154	0.077	2.25	98	-1.81	106	2.8	0	99	300	84	77
94	13.826	0.148	0.079	2.27	98	-0.02	100	2.7	-0.1	99	300	84	77
95	13.979	0.153	0.079	2.28	98	-2.69	104	2.7	0	98	301	84	77
96	14.126	0.147	0.075	2.27	98	-2.4	102	2.7	0	98	299	84	77
97	14.278	0.152	0.083	2.28	98	0	100	2.6	-0.1	98	301	84	77
98	14.426	0.148	0.077	2.29	98	-1.16	102	2.7	0.1	98	300	84	77

BOX A TEST DATA - ASTM E3053 / ASTM E2515

Client: FPI
Model: F1150
Run #: 2

Job #: 19-496
Tracking #: 0031
Technician: SJB
Date: 7/23/2019

	Particulate Sampling Data							Fuel Weight (lb)		Temperature Data (°F)			
Elapsed Time (min)	Gas Meter (ft^3)	Sample Rate (cfm)	Dilution Tunnel dP (in H_2O)	Orifice dH (in H_2O)	Meter Temp (°F)	Meter Vacuum (in Hg)	Pro. Rate (%)	Scale Reading	Weight Change	Dilution Tunnel	Flue	Filter	Ambient
99	14.578	0.152	0.077	2.27	98	-2.15	104	2.6	-0.1	98	300	84	77
100	14.729	0.151	0.077	2.29	99	-0.44	103	2.5	-0.1	98	300	84	78
101	14.878	0.149	0.082	2.27	99	0	99	2.5	0	98	300	84	78
102	15.030	0.152	0.081	2.28	99	-0.23	101	2.4	-0.1	98	298	84	78
103	15.177	0.147	0.084	2.29	99	0	96	2.4	0	98	298	84	78
104	15.330	0.153	0.080	2.27	99	-2.07	103	2.4	0	97	298	84	77
105	15.477	0.147	0.082	2.27	99	-0.44	98	2.4	0	98	297	84	77
106	15.631	0.154	0.088	2.27	99	-2.51	99	2.4	0	98	291	84	78
107	15.779	0.148	0.084	2.28	99	-0.74	97	2.3	-0.1	97	290	84	78
108	15.932	0.153	0.085	2.24	99	0	100	2.3	0	97	287	84	77
109	16.079	0.147	0.079	2.27	99	-1.2	99	2.3	0	97	284	84	77
110	16.231	0.152	0.082	2.25	99	-2.35	101	2.3	0	97	282	84	77
111	16.380	0.149	0.082	2.27	99	0	99	2.2	-0.1	97	280	84	78
112	16.531	0.151	0.087	2.25	99	-2.62	97	2.2	0	96	279	84	77
113	16.682	0.151	0.078	2.26	100	-0.21	102	2.2	0	96	276	84	77
114	16.832	0.150	0.084	2.28	100	-0.81	98	2.2	0	96	277	84	78
115	16.984	0.152	0.079	2.28	100	0	102	2.1	-0.1	96	276	84	78
116	17.131	0.147	0.077	2.26	100	-1.37	100	2.2	0.1	96	273	84	78
117	17.284	0.153	0.074	2.26	100	-1.38	106	2.1	-0.1	96	271	84	77
118	17.431	0.147	0.092	2.27	100	-1.05	92	2.1	0	96	270	84	77
119	17.585	0.154	0.076	2.28	100	-1.22	106	2.1	0	95	267	84	77
120	17.733	0.148	0.083	2.27	100	0	97	2.0	-0.1	95	267	84	77
121	17.886	0.153	0.078	2.27	100	-0.2	104	2.1	0.1	95	265	84	77
122	18.034	0.148	0.083	2.27	100	0	97	2.0	-0.1	95	266	84	77
123	18.185	0.151	0.085	2.25	100	-0.82	98	2.0	0	95	265	84	77
124	18.334	0.149	0.079	2.27	100	-0.05	100	2.0	0	95	267	84	77
125	18.485	0.151	0.085	2.26	100	-0.11	98	2.0	0	95	265	84	77
126	18.636	0.151	0.076	2.25	100	-0.14	104	2.0	0	95	262	84	78
127	18.786	0.150	0.083	2.27	100	-2.71	98	1.9	-0.1	95	263	84	78
128	18.938	0.152	0.082	2.27	100	-0.23	100	1.9	0	95	260	84	77
129	19.085	0.147	0.084	2.29	100	0	96	1.9	0	95	261	84	77
130	19.238	0.153	0.076	2.27	100	-2.64	105	1.8	-0.1	95	260	84	78
131	19.385	0.147	0.086	2.27	101	-0.2	95	1.9	0.1	94	257	84	78

BOX A TEST DATA - ASTM E3053 / ASTM E2515

Client: FPI
Model: F1150
Run #: 2

Job #: 19-496
Tracking #: 0031
Technician: SJB
Date: 7/23/2019

	Particulate Sampling Data							Fuel Weight (lb)		Temperature Data (°F)			
Elapsed Time (min)	Gas Meter (ft^3)	Sample Rate (cfm)	Dilution Tunnel dP (in H_2O)	Orifice dH (in H_2O)	Meter Temp (°F)	Meter Vacuum (in Hg)	Pro. Rate (%)	Scale Reading	Weight Change	Dilution Tunnel	Flue	Filter	Ambient
132	19.538	0.153	0.077	2.27	101	-2.63	104	1.9	0	95	257	84	78
133	19.686	0.148	0.075	2.26	101	-1.53	102	1.8	-0.1	95	255	84	78
134	19.839	0.153	0.078	2.27	101	-2.07	103	1.8	0	95	253	84	78
135	19.987	0.148	0.073	2.26	101	0	103	1.8	0	95	255	84	78
136	20.139	0.152	0.079	2.26	101	-1.71	102	1.8	0	94	256	84	77
137	20.287	0.148	0.074	2.27	101	-1.36	103	1.8	0	95	255	84	77
138	20.438	0.151	0.087	2.26	101	-2.73	97	1.8	0	94	256	84	78
139	20.589	0.151	0.083	2.25	101	-0.92	99	1.8	0	94	256	84	77
140	20.739	0.150	0.085	2.24	101	-1.56	97	1.7	-0.1	94	256	84	78
141	20.890	0.151	0.079	2.26	101	0	101	1.7	0	94	254	84	78
142	21.039	0.149	0.096	2.25	101	-2.7	91	1.7	0	94	254	84	78
143	21.190	0.151	0.086	2.26	101	-2.68	97	1.7	0	94	253	84	77
144	21.338	0.148	0.092	2.27	101	0	92	1.6	-0.1	94	252	84	77
145	21.490	0.152	0.079	2.28	101	-0.4	102	1.6	0	94	252	84	77
146	21.638	0.148	0.080	2.25	101	-0.11	99	1.6	0	94	251	84	78
147	21.792	0.154	0.077	2.25	101	-2.06	105	1.6	0	94	250	84	78
148	21.939	0.147	0.091	2.24	101	-0.76	92	1.6	0	94	250	84	78
149	22.091	0.152	0.079	2.26	101	-1.54	102	1.6	0	94	250	84	78
150	22.239	0.148	0.076	2.25	101	0	101	1.6	0	94	249	84	78
151	22.390	0.151	0.083	2.25	101	0	99	1.5	-0.1	94	249	84	78
152	22.539	0.149	0.087	2.25	101	-0.09	95	1.6	0.1	94	247	84	78
153	22.690	0.151	0.081	2.25	102	-1.31	100	1.5	-0.1	94	247	84	78
154	22.841	0.151	0.081	2.25	102	-0.67	100	1.5	0	93	244	84	78
155	22.990	0.149	0.075	2.25	102	-0.75	102	1.5	0	93	245	84	77
156	23.142	0.152	0.079	2.25	102	-2.14	102	1.5	0	93	244	84	77
157	23.289	0.147	0.083	2.25	102	-0.28	96	1.5	0	93	240	84	78
158	23.442	0.153	0.089	2.25	102	-1.36	96	1.4	-0.1	93	241	84	78
159	23.589	0.147	0.086	2.23	102	-1.17	94	1.4	0	93	239	84	78
160	23.743	0.154	0.083	2.24	102	-1.61	101	1.4	0	93	238	84	78
161	23.890	0.147	0.083	2.24	102	-1.65	96	1.4	0	93	239	84	78
162	24.043	0.153	0.086	2.23	102	-1.69	98	1.4	0	93	238	84	77
163	24.191	0.148	0.081	2.26	102	0	98	1.4	0	93	238	84	78
164	24.342	0.151	0.071	2.24	102	-0.03	107	1.4	0	93	238	84	78

BOX A TEST DATA - ASTM E3053 / ASTM E2515

Client: FPI
Model: F1150
Run #: 2

Job #: 19-496
Tracking #: 0031
Technician: SJB
Date: 7/23/2019

	Particulate Sampling Data							Fuel Weight (lb)		Temperature Data (°F)			
Elapsed Time (min)	Gas Meter (ft^3)	Sample Rate (cfm)	Dilution Tunnel dP (in H_2O)	Orifice dH (in H_2O)	Meter Temp (°F)	Meter Vacuum (in Hg)	Pro. Rate (%)	Scale Reading	Weight Change	Dilution Tunnel	Flue	Filter	Ambient
165	24.491	0.149	0.087	2.26	102	-0.01	95	1.2	-0.2	93	237	84	78
166	24.642	0.151	0.081	2.24	102	-2.16	100	1.3	0.1	93	237	84	78
167	24.793	0.151	0.079	2.26	102	-0.27	101	1.3	0	93	236	84	78
168	24.942	0.149	0.086	2.26	102	-0.12	96	1.3	0	93	236	84	78
169	25.095	0.153	0.086	2.25	102	-1.46	98	1.3	0	93	235	84	78
170	25.242	0.147	0.086	2.26	102	-0.96	94	1.3	0	93	235	84	78
171	25.394	0.152	0.074	2.25	102	-1.21	105	1.3	0	93	236	84	79
172	25.541	0.147	0.080	2.26	102	-1.09	98	1.3	0	93	234	84	79
173	25.694	0.153	0.083	2.25	102	-0.52	100	1.2	-0.1	93	233	84	78
174	25.842	0.148	0.081	2.23	102	0	98	1.2	0	93	234	84	78
175	25.995	0.153	0.082	2.24	102	-2.45	101	1.2	0	93	234	84	78
176	26.143	0.148	0.077	2.24	102	-0.73	100	1.2	0	93	233	84	79
177	26.295	0.152	0.073	2.27	102	0	106	1.2	0	93	232	84	78
178	26.443	0.148	0.083	2.26	102	-0.02	97	1.2	0	93	234	84	78
179	26.594	0.151	0.078	2.26	102	-1.07	102	1.2	0	93	232	84	78
180	26.744	0.150	0.077	2.26	102	0	102	1.1	-0.1	93	232	84	78
181	26.894	0.150	0.077	2.24	102	0	102	1.1	0	93	232	84	78
182	27.045	0.151	0.086	2.24	102	-2.72	97	1.1	0	93	232	84	78
183	27.195	0.150	0.077	2.26	102	-2.36	102	1.1	0	93	232	84	78
184	27.346	0.151	0.084	2.26	102	-2.69	98	1.1	0	93	231	84	78
185	27.493	0.147	0.076	2.25	102	-2.7	100	1.1	0	93	232	84	78
186	27.646	0.153	0.075	2.25	102	0	105	1.1	0	93	232	84	78
187	27.793	0.147	0.088	2.24	103	-0.02	93	1.0	-0.1	93	231	84	79
188	27.947	0.154	0.076	2.23	103	-1.31	105	0.9	-0.1	93	230	84	79
189	28.094	0.147	0.089	2.25	103	-0.06	93	1.0	0.1	93	229	84	79
190	28.247	0.153	0.076	2.25	103	-2.49	104	1.0	0	93	228	84	79
191	28.394	0.147	0.074	2.25	103	-2.69	101	0.9	-0.1	93	229	84	79
192	28.546	0.152	0.074	2.26	103	-2.2	105	1.1	0.2	93	228	84	79
193	28.694	0.148	0.085	2.25	103	-0.2	95	0.9	-0.2	93	228	84	79
194	28.846	0.152	0.079	2.23	103	-1.77	102	1.0	0.1	93	227	84	79
195	28.997	0.151	0.086	2.24	103	-1.93	97	0.9	-0.1	93	225	84	79
196	29.146	0.149	0.079	2.24	103	-0.27	100	0.9	0	93	226	84	79
197	29.298	0.152	0.083	2.25	103	-1.06	99	0.9	0	93	226	84	79

BOX A TEST DATA - ASTM E3053 / ASTM E2515

Client: FPI
Model: F1150
Run #: 2

Job #: 19-496
Tracking #: 0031
Technician: SJB
Date: 7/23/2019

	Particulate Sampling Data							Fuel Weight (lb)		Temperature Data (°F)			
Elapsed Time (min)	Gas Meter (ft^3)	Sample Rate (cfm)	Dilution Tunnel dP (in H_2O)	Orifice dH (in H_2O)	Meter Temp (°F)	Meter Vacuum (in Hg)	Pro. Rate (%)	Scale Reading	Weight Change	Dilution Tunnel	Flue	Filter	Ambient
198	29.445	0.147	0.074	2.24	103	-2.4	101	0.9	0	93	226	84	78
199	29.598	0.153	0.079	2.26	103	-0.1	102	0.9	0	93	228	84	78
200	29.744	0.146	0.081	2.24	103	-2.62	96	0.7	-0.2	93	227	84	79
201	29.899	0.155	0.081	2.25	103	-2.4	102	0.9	0.2	93	226	84	79
202	30.046	0.147	0.074	2.24	103	0	101	0.9	0	93	225	84	79
203	30.199	0.153	0.073	2.23	103	-0.96	106	0.9	0	93	225	84	79
204	30.347	0.148	0.075	2.23	103	-0.07	101	0.8	-0.1	93	224	84	79
205	30.498	0.151	0.078	2.25	103	-1.48	102	0.8	0	93	224	84	79
206	30.646	0.148	0.086	2.24	103	0	95	0.8	0	93	225	84	79
207	30.797	0.151	0.081	2.23	103	-2.28	100	0.8	0	93	224	85	79
208	30.948	0.151	0.074	2.25	103	-2.47	104	0.8	0	93	224	85	79
209	31.098	0.150	0.080	2.24	103	-2.7	100	0.8	0	92	223	85	79
210	31.249	0.151	0.091	2.24	103	0	94	0.7	-0.1	93	223	85	79
211	31.398	0.149	0.078	2.24	103	-0.44	100	0.8	0.1	93	224	85	79
212	31.549	0.151	0.081	2.23	103	-0.01	100	0.7	-0.1	93	223	85	79
213	31.697	0.148	0.077	2.25	103	-2.2	100	0.7	0	92	223	85	79
214	31.849	0.152	0.086	2.24	103	0	97	0.7	0	93	222	85	78
215	31.997	0.148	0.079	2.23	103	-1.23	99	0.7	0	92	224	85	79
216	32.151	0.154	0.072	2.24	104	0	108	0.6	-0.1	93	222	85	79
217	32.299	0.148	0.080	2.23	104	-0.01	98	0.7	0.1	93	222	85	79
218	32.451	0.152	0.082	2.24	104	-0.35	99	0.7	0	92	223	85	79
219	32.598	0.147	0.077	2.21	104	0	99	0.6	-0.1	92	222	85	79
220	32.750	0.152	0.088	2.26	104	-2.59	96	0.6	0	92	222	85	79
221	32.899	0.149	0.081	2.22	104	-2.59	98	0.6	0	92	221	85	79
222	33.050	0.151	0.077	2.22	104	-1.94	102	0.6	0	92	222	85	79
223	33.202	0.152	0.077	2.25	104	-0.81	103	0.6	0	92	221	85	79
224	33.351	0.149	0.086	2.26	104	-2.77	95	0.6	0	92	221	85	79
225	33.503	0.152	0.088	2.24	104	-2.4	96	0.6	0	92	221	85	79
226	33.650	0.147	0.081	2.25	104	-0.63	97	0.6	0	92	220	85	79
227	33.803	0.153	0.088	2.23	104	-2.49	97	0.4	-0.2	92	220	85	79
228	33.951	0.148	0.085	2.24	104	-1.87	95	0.5	0.1	92	219	85	79
229	34.104	0.153	0.082	2.25	104	-0.5	100	0.5	0	92	220	85	79
230	34.252	0.148	0.090	2.24	104	-2.25	92	0.4	-0.1	92	219	85	79

BOX A TEST DATA - ASTM E3053 / ASTM E2515

Client: FPI
Model: F1150
Run #: 2

Job #: 19-496
Tracking #: 0031
Technician: SJB
Date: 7/23/2019

	Particulate Sampling Data							Fuel Weight (lb)		Temperature Data (°F)			
Elapsed Time (min)	Gas Meter (ft^3)	Sample Rate (cfm)	Dilution Tunnel dP (in H_2O)	Orifice dH (in H_2O)	Meter Temp (°F)	Meter Vacuum (in Hg)	Pro. Rate (%)	Scale Reading	Weight Change	Dilution Tunnel	Flue	Filter	Ambient
231	34.405	0.153	0.086	2.23	104	-2.52	98	0.5	0.1	92	217	85	79
232	34.552	0.147	0.078	2.23	104	0	99	0.5	0	92	217	85	79
233	34.704	0.152	0.083	2.25	104	-1.07	99	0.5	0	92	216	85	79
234	34.853	0.149	0.077	2.22	104	-0.9	101	0.5	0	92	215	85	79
235	35.004	0.151	0.085	2.24	104	-0.14	97	0.3	-0.2	92	215	85	79
236	35.156	0.152	0.086	2.23	104	-0.2	97	0.4	0.1	92	216	85	79
237	35.305	0.149	0.076	2.23	104	-1.08	101	0.4	0	92	214	85	79
238	35.457	0.152	0.087	2.24	104	-1.47	97	0.4	0	92	214	85	79
239	35.604	0.147	0.082	2.24	104	0	96	0.4	0	92	215	85	79
240	35.757	0.153	0.080	2.26	104	0	101	0.4	0	92	213	85	79
241	35.905	0.148	0.086	2.23	104	-0.55	95	0.4	0	92	214	85	79
242	36.059	0.154	0.089	2.23	104	0	97	0.4	0	92	212	85	79
243	36.206	0.147	0.070	2.23	104	-0.3	104	0.4	0	92	214	85	79
244	36.359	0.153	0.081	2.23	104	-2.61	101	0.4	0	92	212	85	79
245	36.507	0.148	0.078	2.25	104	-2.02	99	0.4	0	92	210	85	79
246	36.658	0.151	0.076	2.23	104	-2.56	103	0.4	0	92	211	85	79
247	36.808	0.150	0.081	2.22	104	-0.62	99	0.3	-0.1	92	210	85	79
248	36.959	0.151	0.078	2.23	104	-0.18	101	0.3	0	92	209	85	79
249	37.110	0.151	0.093	2.22	104	-0.07	93	0.3	0	92	208	85	79
250	37.260	0.150	0.083	2.21	104	-0.49	98	0.3	0	92	207	85	79
251	37.411	0.151	0.083	2.25	105	-1.64	98	0.3	0	92	207	85	79
252	37.559	0.148	0.080	2.24	105	0	98	0.4	0.1	92	206	85	79
253	37.712	0.153	0.086	2.23	105	-2.49	98	0.3	-0.1	92	205	85	79
254	37.860	0.148	0.077	2.25	105	-1.99	100	0.3	0	92	203	85	79
255	38.013	0.153	0.070	2.23	105	-1.47	108	0.3	0	92	203	85	79
256	38.161	0.148	0.071	2.24	105	-0.46	104	0.3	0	92	203	85	79
257	38.314	0.153	0.074	2.24	105	-1.57	105	0.2	-0.1	92	202	85	79
258	38.461	0.147	0.090	2.26	105	0	92	0.2	0	92	202	85	79
259	38.613	0.152	0.079	2.24	105	-2.68	101	0.2	0	92	201	85	79
260	38.762	0.149	0.082	2.23	105	-1.88	97	0.3	0.1	92	200	85	80
261	38.913	0.151	0.084	2.23	105	-1.57	97	0.2	-0.1	92	199	85	79
262	39.065	0.152	0.082	2.24	105	-0.91	99	0.2	0	92	200	85	79
263	39.214	0.149	0.081	2.22	105	-0.4	98	0.2	0	92	199	85	79

BOX A TEST DATA - ASTM E3053 / ASTM E2515

Client: FPI
Model: F1150
Run #: 2

Job #: 19-496
Tracking #: 0031
Technician: SJB
Date: 7/23/2019

	Particulate Sampling Data							Fuel Weight (lb)		Temperature Data (°F)			
Elapsed Time (min)	Gas Meter (ft^3)	Sample Rate (cfm)	Dilution Tunnel dP (in H_2O)	Orifice dH (in H_2O)	Meter Temp (°F)	Meter Vacuum (in Hg)	Pro. Rate (%)	Scale Reading	Weight Change	Dilution Tunnel	Flue	Filter	Ambient
264	39.366	0.152	0.091	2.26	105	-2.71	94	0.2	0	92	199	85	79
265	39.513	0.147	0.083	2.22	105	-0.02	95	0.2	0	92	199	85	79
266	39.666	0.153	0.080	2.23	105	-2.08	101	0.2	0	92	198	85	80
267	39.813	0.147	0.088	2.21	105	-0.8	93	0.2	0	92	197	85	79
268	39.967	0.154	0.084	2.22	105	-2.68	99	0.2	0	92	198	85	79
269	40.115	0.148	0.076	2.23	105	-2.54	100	0.2	0	92	197	85	80
270	40.268	0.153	0.078	2.24	105	-0.13	102	0.1	-0.1	92	197	85	79
271	40.415	0.147	0.082	2.24	105	-2.68	96	0.1	0	92	196	85	79
272	40.567	0.152	0.081	2.24	105	-0.5	100	0.1	0	92	196	85	79
273	40.716	0.149	0.075	2.24	105	-0.02	102	0.1	0	92	195	85	79
274	40.868	0.152	0.079	2.25	105	-0.41	101	0.1	0	92	195	85	79
275	41.019	0.151	0.086	2.24	105	-2.15	96	0.1	0	92	194	85	79
276	41.168	0.149	0.082	2.22	105	-0.19	97	0.1	0	92	194	85	79
277	41.320	0.152	0.081	2.24	105	0	100	0.1	0	92	193	85	79
278	41.467	0.147	0.077	2.21	105	-2.69	99	0.1	0	92	192	85	79
279	41.620	0.153	0.079	2.25	105	-0.04	102	0.1	0	92	193	85	79
280	41.768	0.148	0.081	2.21	105	-0.48	97	0.1	0	92	192	85	79
281	41.922	0.154	0.084	2.22	105	-0.85	99	0.1	0	91	191	85	79
282	42.069	0.147	0.089	2.23	105	-1.02	92	0.1	0	91	190	85	79
283	42.223	0.154	0.075	2.23	105	-0.17	105	0.1	0	91	190	85	79
284	42.370	0.147	0.070	2.24	105	0	104	0.0	-0.1	91	189	85	79
Avg/Tot	42.370	0.149	0.081	2.24	98	-1.15	100			100	291	85	78.0

BOX B TEST DATA - ASTM E3053 / ASTM E2515

Client: FPI
Model: F1150
Run #: 2

Job #: 19-496
Tracking #: 0031
Technician: SJB
Date: 7/23/2019

	Particulate Sampling Data							Flue Gas Data		
Elapsed Time (min)	Gas Meter (ft^3)	Sample Rate (cfm)	Orifice dH (in H_2O)	Meter Temp (°F)	Meter Vacuum (in Hg)	Pro. Rate (%)	Filter (°F)	Flue Draft (in H_2O)	CO_2 (%)	CO (%)
0	0.000		0.00	76	-1		85	0.000	4.45	0.33
1	0.098	0.098	2.26	76	-1.38	71	84	-0.070	1.66	0.18
2	0.242	0.144	2.26	76	-0.52	109	83	-0.070	5.59	0.52
3	0.387	0.145	2.23	76	-3.05	100	84	-0.070	8.01	0.28
4	0.530	0.143	2.22	76	-2.82	101	86	-0.080	8.53	0.23
5	0.675	0.145	2.21	76	-2.91	112	86	-0.080	9.61	0.25
6	0.817	0.142	2.18	76	-2.65	107	85	-0.100	10.82	0.40
7	0.962	0.145	2.15	76	-1.24	104	84	-0.080	12.03	0.69
8	1.102	0.140	2.16	77	-2.72	103	84	-0.080	10.32	0.54
9	1.246	0.144	2.15	77	-1.14	105	84	-0.100	8.90	0.09
10	1.385	0.139	2.15	77	-0.9	98	86	-0.090	8.18	0.11
11	1.530	0.145	2.16	77	-1.87	101	86	-0.080	8.38	0.08
12	1.671	0.141	2.16	78	-2.22	101	85	-0.070	8.71	0.13
13	1.813	0.142	2.15	78	-2.82	105	84	-0.080	8.87	0.10
14	1.955	0.142	2.15	78	-0.61	103	84	-0.060	9.39	0.10
15	2.095	0.140	2.14	78	-0.57	97	84	-0.070	9.71	0.18
16	2.239	0.144	2.13	79	-1.51	98	86	-0.080	9.45	0.21
17	2.380	0.141	2.15	79	-3.01	100	86	-0.070	9.47	0.17
18	2.524	0.144	2.13	79	-0.81	100	85	-0.080	9.36	0.15
19	2.663	0.139	2.13	80	-0.79	101	84	-0.080	9.27	0.17
20	2.806	0.143	2.12	80	-1.7	100	84	-0.070	9.50	0.24
21	2.947	0.141	2.11	80	-0.83	99	84	-0.080	9.49	0.23
22	3.091	0.144	2.13	81	-1	101	84	-0.080	9.77	0.29
23	3.232	0.141	2.13	81	-0.78	99	85	-0.070	9.82	0.30
24	3.372	0.140	2.11	82	-1.57	100	86	-0.080	9.78	0.31
25	3.515	0.143	2.11	82	-1.71	96	86	-0.070	9.71	0.29
26	3.655	0.140	2.12	82	-0.87	100	85	-0.070	9.52	0.24
27	3.800	0.145	2.11	83	-1.28	101	84	-0.080	9.40	0.24
28	3.939	0.139	2.11	83	-2.23	99	84	-0.080	9.38	0.21
29	4.082	0.143	2.10	83	-2.7	93	84	-0.070	9.46	0.22
30	4.222	0.140	2.10	84	-1.93	98	84	-0.080	9.30	0.29
31	4.365	0.143	2.11	84	-2.69	99	86	-0.070	9.43	0.33

BOX B TEST DATA - ASTM E3053 / ASTM E2515

Client: FPI
Model: F1150
Run #: 2

Job #: 19-496
Tracking #: 0031
Technician: SJB
Date: 7/23/2019

	Particulate Sampling Data							Flue Gas Data		
Elapsed Time (min)	Gas Meter (ft^3)	Sample Rate (cfm)	Orifice dH (in H_2O)	Meter Temp (°F)	Meter Vacuum (in Hg)	Pro. Rate (%)	Filter (°F)	Flue Draft (in H_2O)	CO_2 (%)	CO (%)
32	4.508	0.143	2.20	84	-0.73	100	86	-0.080	9.73	0.37
33	4.654	0.146	2.19	85	-1.4	99	86	-0.070	9.82	0.43
34	4.798	0.144	2.19	85	-2.21	98	85	-0.070	9.88	0.41
35	4.943	0.145	2.19	85	-2.46	99	85	-0.080	10.07	0.44
36	5.087	0.144	2.20	86	-2.94	100	84	-0.080	10.03	0.41
37	5.232	0.145	2.18	86	-1.23	100	84	-0.070	10.19	0.42
38	5.376	0.144	2.18	86	-1.98	99	85	-0.080	10.17	0.43
39	5.519	0.143	2.17	87	-1.27	104	86	-0.070	10.05	0.50
40	5.665	0.146	2.19	87	-0.65	104	86	-0.080	10.23	0.48
41	5.809	0.144	2.16	87	-1.19	101	85	-0.080	10.36	0.51
42	5.955	0.146	2.16	87	-2.94	104	85	-0.090	10.22	0.60
43	6.098	0.143	2.17	88	-1.2	101	85	-0.080	10.54	0.57
44	6.245	0.147	2.16	88	-0.79	100	84	-0.080	10.13	0.48
45	6.387	0.142	2.14	88	-3.08	99	84	-0.060	10.48	0.52
46	6.533	0.146	2.16	88	-1.28	99	85	-0.080	10.53	0.60
47	6.675	0.142	2.15	89	-3.17	102	86	-0.070	10.87	0.75
48	6.821	0.146	2.15	89	-2.68	102	86	-0.070	10.59	0.63
49	6.962	0.141	2.13	89	-1.42	97	85	-0.080	10.03	0.36
50	7.109	0.147	2.14	89	-3.16	100	85	-0.070	9.21	0.09
51	7.251	0.142	2.15	90	-1.38	97	85	-0.070	8.58	0.09
52	7.397	0.146	2.13	90	-1.07	101	84	-0.060	7.93	0.09
53	7.540	0.143	2.15	90	-2.9	96	84	-0.070	7.43	0.10
54	7.686	0.146	2.14	91	-0.95	100	85	-0.070	7.09	0.10
55	7.829	0.143	2.13	91	-2.1	102	86	-0.060	6.87	0.10
56	7.974	0.145	2.14	91	-3.23	99	86	-0.070	6.77	0.10
57	8.118	0.144	2.14	91	-0.91	97	85	-0.060	6.42	0.13
58	8.262	0.144	2.13	91	-3.29	97	85	-0.070	6.46	0.09
59	8.407	0.145	2.14	92	-2.57	98	85	-0.070	6.33	0.14
60	8.550	0.143	2.13	92	-0.89	97	84	-0.060	6.33	0.15
61	8.696	0.146	2.14	92	-0.8	105	84	-0.070	6.47	0.16
62	8.842	0.146	2.26	92	-2.21	104	85	-0.070	6.63	0.15
63	8.992	0.150	2.26	92	-3.16	100	86	-0.070	6.85	0.13

BOX B TEST DATA - ASTM E3053 / ASTM E2515

Client: FPI
Model: F1150
Run #: 2

Job #: 19-496
Tracking #: 0031
Technician: SJB
Date: 7/23/2019

	Particulate Sampling Data							Flue Gas Data		
Elapsed Time (min)	Gas Meter (ft^3)	Sample Rate (cfm)	Orifice dH (in H_2O)	Meter Temp (°F)	Meter Vacuum (in Hg)	Pro. Rate (%)	Filter (°F)	Flue Draft (in H_2O)	CO_2 (%)	CO (%)
64	9.140	0.148	2.27	93	-2.84	99	86	-0.050	6.05	0.15
65	9.289	0.149	2.26	93	-0.76	105	85	-0.060	5.43	0.27
66	9.438	0.149	2.25	93	-1.92	103	85	-0.080	5.48	0.29
67	9.586	0.148	2.26	93	-1.71	97	84	-0.060	5.47	0.28
68	9.735	0.149	2.26	93	-1.7	103	84	-0.060	5.53	0.24
69	9.884	0.149	2.28	93	-1.48	105	84	-0.060	5.64	0.24
70	10.033	0.149	2.27	94	-2.41	99	85	-0.050	5.80	0.22
71	10.180	0.147	2.27	94	-3.2	99	86	-0.060	5.82	0.23
72	10.330	0.150	2.25	94	-3.19	100	86	-0.060	5.89	0.20
73	10.477	0.147	2.27	94	-1.5	102	85	-0.050	5.92	0.23
74	10.627	0.150	2.26	94	-3.26	102	85	-0.060	5.61	0.27
75	10.774	0.147	2.25	94	-2.12	101	84	-0.060	5.73	0.28
76	10.926	0.152	2.26	94	-0.88	106	84	-0.070	5.84	0.21
77	11.072	0.146	2.25	95	-0.91	100	84	-0.060	5.96	0.23
78	11.224	0.152	2.26	95	-0.78	112	86	-0.060	6.00	0.23
79	11.370	0.146	2.27	95	-2.97	94	86	-0.070	5.77	0.25
80	11.522	0.152	2.27	95	-0.82	102	86	-0.060	5.89	0.27
81	11.668	0.146	2.26	95	-2.78	99	85	-0.060	5.86	0.30
82	11.819	0.151	2.27	95	-0.79	104	84	-0.050	5.75	0.27
83	11.966	0.147	2.27	95	-1.11	100	84	-0.060	5.37	0.29
84	12.116	0.150	2.27	95	-3.02	101	84	-0.050	5.08	0.32
85	12.264	0.148	2.26	96	-0.88	94	85	-0.050	5.06	0.33
86	12.415	0.151	2.27	96	-0.79	97	86	-0.040	5.22	0.33
87	12.563	0.148	2.25	96	-2.86	102	86	-0.050	5.24	0.30
88	12.713	0.150	2.26	96	-1.31	97	85	-0.050	5.18	0.35
89	12.863	0.150	2.27	96	-0.79	106	84	-0.070	5.30	0.31
90	13.011	0.148	2.27	96	-3.09	101	84	-0.050	5.43	0.28
91	13.161	0.150	2.26	96	-0.88	99	84	-0.050	5.42	0.26
92	13.308	0.147	2.27	96	-1.82	100	85	-0.040	5.27	0.29
93	13.460	0.152	2.27	96	-1.45	105	86	-0.040	5.50	0.25
94	13.607	0.147	2.26	96	-1.39	100	86	-0.060	5.35	0.25
95	13.758	0.151	2.25	97	-3.36	103	85	-0.060	5.49	0.27

BOX B TEST DATA - ASTM E3053 / ASTM E2515

Client: FPI
Model: F1150
Run #: 2

Job #: 19-496
Tracking #: 0031
Technician: SJB
Date: 7/23/2019

	Particulate Sampling Data							Flue Gas Data		
Elapsed Time (min)	Gas Meter (ft^3)	Sample Rate (cfm)	Orifice dH (in H_2O)	Meter Temp (°F)	Meter Vacuum (in Hg)	Pro. Rate (%)	Filter (°F)	Flue Draft (in H_2O)	CO_2 (%)	CO (%)
96	13.906	0.148	2.26	97	-2.99	103	84	-0.060	5.32	0.28
97	14.058	0.152	2.25	97	-3.04	101	84	-0.060	5.51	0.27
98	14.204	0.146	2.26	97	-1.29	101	84	-0.050	5.61	0.25
99	14.357	0.153	2.27	97	-3.19	106	84	-0.040	5.57	0.24
100	14.503	0.146	2.26	97	-1.22	101	85	-0.060	5.50	0.26
101	14.654	0.151	2.27	97	-2.13	101	86	-0.060	5.42	0.27
102	14.802	0.148	2.27	97	-2.7	100	86	-0.050	5.36	0.26
103	14.952	0.150	2.27	97	-2.24	99	85	-0.060	5.46	0.26
104	15.100	0.148	2.25	97	-2.22	100	84	-0.050	5.49	0.28
105	15.251	0.151	2.25	97	-1.26	101	84	-0.050	5.19	0.29
106	15.400	0.149	2.25	98	-0.84	96	84	-0.050	5.16	0.32
107	15.550	0.150	2.26	98	-0.99	99	85	-0.050	4.91	0.36
108	15.701	0.151	2.27	98	-0.8	99	86	-0.050	4.78	0.34
109	15.848	0.147	2.27	98	-2.81	100	86	-0.060	4.87	0.34
110	15.999	0.151	2.24	98	-1.84	101	85	-0.040	4.66	0.37
111	16.146	0.147	2.27	98	-0.89	98	84	-0.050	4.70	0.39
112	16.298	0.152	2.26	98	-1.31	98	84	-0.050	4.79	0.40
113	16.446	0.148	2.27	98	-3.17	101	84	-0.050	4.87	0.37
114	16.598	0.152	2.25	98	-0.9	100	85	-0.040	4.72	0.38
115	16.745	0.147	2.26	98	-0.79	100	86	-0.070	4.80	0.39
116	16.897	0.152	2.24	98	-0.88	104	86	-0.060	4.90	0.41
117	17.044	0.147	2.26	98	-1.96	103	85	-0.050	4.74	0.48
118	17.195	0.151	2.26	98	-3.18	95	84	-0.040	4.84	0.44
119	17.343	0.148	2.27	98	-1.95	102	84	-0.050	4.63	0.43
120	17.494	0.151	2.27	98	-1.54	100	84	-0.050	4.77	0.43
121	17.642	0.148	2.26	98	-2.61	101	84	-0.050	4.97	0.44
122	17.793	0.151	2.26	98	-1.07	100	86	-0.050	4.73	0.44
123	17.943	0.150	2.27	98	-2.31	98	86	-0.040	4.86	0.45
124	18.092	0.149	2.25	99	-0.79	101	86	-0.050	4.86	0.46
125	18.243	0.151	2.27	99	-3.14	99	85	-0.040	4.77	0.43
126	18.390	0.147	2.27	99	-3.15	101	84	-0.040	4.74	0.45
127	18.542	0.152	2.26	99	-1.05	100	84	-0.030	4.83	0.47

BOX B TEST DATA - ASTM E3053 / ASTM E2515

Client: FPI
Model: F1150
Run #: 2

Job #: 19-496
Tracking #: 0031
Technician: SJB
Date: 7/23/2019

	Particulate Sampling Data							Flue Gas Data		
Elapsed Time (min)	Gas Meter (ft^3)	Sample Rate (cfm)	Orifice dH (in H_2O)	Meter Temp (°F)	Meter Vacuum (in Hg)	Pro. Rate (%)	Filter (°F)	Flue Draft (in H_2O)	CO_2 (%)	CO (%)
128	18.689	0.147	2.27	99	-0.75	98	84	-0.040	4.79	0.50
129	18.841	0.152	2.25	99	-0.81	100	85	-0.040	4.68	0.55
130	18.989	0.148	2.25	99	-1.68	102	86	-0.060	4.76	0.53
131	19.141	0.152	2.25	99	-1.71	99	86	-0.050	4.70	0.52
132	19.288	0.147	2.26	99	-0.77	101	85	-0.040	4.73	0.53
133	19.441	0.153	2.25	99	-0.91	106	84	-0.040	4.77	0.49
134	19.587	0.146	2.26	99	-1.88	99	84	-0.040	4.75	0.53
135	19.739	0.152	2.27	99	-1.33	107	84	-0.040	4.75	0.53
136	19.887	0.148	2.25	99	-3.14	100	85	-0.050	4.82	0.54
137	20.038	0.151	2.24	99	-1.27	106	86	-0.050	4.80	0.58
138	20.187	0.149	2.26	99	-1.02	96	86	-0.050	4.90	0.53
139	20.337	0.150	2.25	99	-3.27	99	85	-0.050	4.95	0.54
140	20.488	0.151	2.24	99	-1.27	98	84	-0.040	4.79	0.56
141	20.637	0.149	2.26	99	-1.1	101	84	-0.050	4.71	0.54
142	20.787	0.150	2.27	99	-2.67	92	84	-0.040	4.67	0.57
143	20.935	0.148	2.27	99	-0.87	96	84	-0.050	4.52	0.57
144	21.086	0.151	2.27	99	-3.22	95	86	-0.040	4.65	0.53
145	21.234	0.148	2.26	99	-3.18	100	87	-0.040	4.67	0.52
146	21.387	0.153	2.25	100	-2.53	103	86	-0.050	4.45	0.42
147	21.534	0.147	2.26	100	-3.15	101	85	-0.040	4.42	0.51
148	21.687	0.153	2.24	100	-1.61	96	84	-0.030	4.33	0.53
149	21.834	0.147	2.26	100	-0.87	99	84	-0.050	4.44	0.54
150	21.985	0.151	2.25	100	-2.99	104	84	-0.040	4.33	0.51
151	22.133	0.148	2.25	100	-3.21	97	86	-0.050	4.37	0.51
152	22.284	0.151	2.26	100	-3.26	97	87	-0.040	4.12	0.54
153	22.434	0.150	2.27	100	-3.21	100	86	-0.050	4.32	0.52
154	22.584	0.150	2.26	100	-2.77	100	85	-0.050	4.25	0.47
155	22.734	0.150	2.26	100	-1.13	104	84	-0.040	4.27	0.48
156	22.884	0.150	2.28	100	-2.88	101	84	-0.050	4.07	0.48
157	23.034	0.150	2.27	100	-1.37	99	84	-0.040	4.15	0.47
158	23.182	0.148	2.25	100	-1.64	94	85	-0.040	4.07	0.49
159	23.333	0.151	2.26	100	-2.85	98	86	-0.040	4.14	0.49

BOX B TEST DATA - ASTM E3053 / ASTM E2515

Client: FPI
Model: F1150
Run #: 2

Job #: 19-496
Tracking #: 0031
Technician: SJB
Date: 7/23/2019

	Particulate Sampling Data							Flue Gas Data		
Elapsed Time (min)	Gas Meter (ft^3)	Sample Rate (cfm)	Orifice dH (in H_2O)	Meter Temp (°F)	Meter Vacuum (in Hg)	Pro. Rate (%)	Filter (°F)	Flue Draft (in H_2O)	CO_2 (%)	CO (%)
160	23.481	0.148	2.25	100	-0.91	97	86	-0.050	4.12	0.47
161	23.634	0.153	2.25	100	-3.05	101	85	-0.040	4.19	0.50
162	23.781	0.147	2.25	100	-2.85	95	84	-0.030	4.19	0.49
163	23.934	0.153	2.25	100	-2.89	102	84	-0.050	4.34	0.50
164	24.081	0.147	2.26	100	-1.68	105	84	-0.040	4.30	0.50
165	24.232	0.151	2.25	100	-3.3	97	84	-0.040	4.28	0.48
166	24.381	0.149	2.26	100	-1.08	99	86	-0.040	4.28	0.50
167	24.532	0.151	2.27	100	-2.46	102	86	-0.040	4.25	0.48
168	24.681	0.149	2.25	100	-2.75	96	85	-0.050	4.27	0.53
169	24.832	0.151	2.26	100	-1.35	98	84	-0.040	4.21	0.53
170	24.982	0.150	2.26	100	-2.37	97	84	-0.030	4.28	0.52
171	25.132	0.150	2.27	100	-2.74	105	84	-0.060	4.37	0.53
172	25.282	0.150	2.26	100	-0.98	101	84	-0.040	4.35	0.51
173	25.430	0.148	2.24	100	-3.29	97	85	-0.040	4.04	0.48
174	25.581	0.151	2.26	100	-1.44	101	86	-0.040	4.11	0.47
175	25.729	0.148	2.26	100	-2.37	98	85	-0.040	4.18	0.46
176	25.882	0.153	2.25	100	-1.09	105	84	-0.030	4.02	0.45
177	26.029	0.147	2.26	100	-2.47	103	84	-0.050	4.15	0.48
178	26.182	0.153	2.26	100	-2.11	101	84	-0.030	4.24	0.48
179	26.329	0.147	2.26	100	-2.9	100	84	-0.030	4.15	0.45
180	26.481	0.152	2.26	100	-1.35	104	86	-0.030	4.19	0.45
181	26.629	0.148	2.26	100	-1	101	86	-0.040	4.03	0.48
182	26.780	0.151	2.26	100	-2.85	98	85	-0.040	4.00	0.49
183	26.929	0.149	2.26	100	-3.08	102	84	-0.030	4.12	0.46
184	27.080	0.151	2.26	101	-3.21	99	84	-0.030	4.17	0.47
185	27.230	0.150	2.26	101	-2.64	103	84	-0.040	4.20	0.48
186	27.380	0.150	2.25	101	-2.05	104	84	-0.040	4.14	0.51
187	27.530	0.150	2.25	101	-1.82	96	86	-0.040	4.13	0.50
188	27.678	0.148	2.24	101	-2.37	102	86	-0.030	4.16	0.48
189	27.829	0.151	2.27	101	-3.06	96	85	-0.040	4.12	0.54
190	27.977	0.148	2.26	101	-0.83	102	84	-0.040	4.02	0.47
191	28.130	0.153	2.25	101	-2.2	106	84	-0.030	4.16	0.48

BOX B TEST DATA - ASTM E3053 / ASTM E2515

Client: FPI
Model: F1150
Run #: 2

Job #: 19-496
Tracking #: 0031
Technician: SJB
Date: 7/23/2019

	Particulate Sampling Data							Flue Gas Data		
Elapsed Time (min)	Gas Meter (ft^3)	Sample Rate (cfm)	Orifice dH (in H_2O)	Meter Temp (°F)	Meter Vacuum (in Hg)	Pro. Rate (%)	Filter (°F)	Flue Draft (in H_2O)	CO_2 (%)	CO (%)
192	28.278	0.148	2.25	101	-1.72	103	84	-0.040	4.09	0.48
193	28.430	0.152	2.26	101	-1.45	99	85	-0.030	4.00	0.51
194	28.578	0.148	2.26	101	-2.33	100	86	-0.040	3.86	0.48
195	28.729	0.151	2.26	101	-3.24	97	86	-0.050	4.04	0.47
196	28.877	0.148	2.26	101	-0.87	100	85	-0.040	3.94	0.48
197	29.028	0.151	2.25	101	-0.84	99	84	-0.040	4.03	0.48
198	29.178	0.150	2.26	101	-0.78	104	84	-0.050	4.03	0.50
199	29.329	0.151	2.25	101	-3.11	102	84	-0.040	3.99	0.51
200	29.478	0.149	2.26	101	-1.07	99	84	-0.040	4.10	0.46
201	29.628	0.150	2.26	101	-0.8	100	86	-0.040	4.12	0.45
202	29.779	0.151	2.26	101	-1.07	105	86	-0.030	3.97	0.48
203	29.927	0.148	2.26	101	-3.08	104	85	-0.040	4.01	0.47
204	30.078	0.151	2.25	101	-1.61	104	84	-0.030	3.94	0.48
205	30.226	0.148	2.24	101	-2.28	100	84	-0.040	3.94	0.42
206	30.379	0.153	2.25	101	-0.75	99	84	-0.040	3.90	0.47
207	30.526	0.147	2.24	101	-3.11	98	84	-0.030	3.93	0.43
208	30.679	0.153	2.23	101	-3.18	106	86	-0.040	3.96	0.46
209	30.826	0.147	2.25	101	-1.88	98	86	-0.040	3.92	0.45
210	30.978	0.152	2.23	101	-1.88	95	85	-0.040	3.90	0.47
211	31.126	0.148	2.25	101	-1.46	100	85	-0.040	3.90	0.51
212	31.277	0.151	2.25	101	-3.18	100	84	-0.040	3.97	0.45
213	31.427	0.150	2.25	101	-0.88	102	84	-0.020	3.85	0.48
214	31.578	0.151	2.25	102	-1.75	97	84	-0.040	3.93	0.47
215	31.728	0.150	2.26	102	-0.73	101	86	-0.050	3.89	0.42
216	31.877	0.149	2.25	102	-1.35	105	86	-0.040	4.01	0.41
217	32.028	0.151	2.26	102	-0.77	101	85	-0.040	3.89	0.43
218	32.176	0.148	2.25	102	-1.37	98	85	-0.040	3.83	0.46
219	32.328	0.152	2.25	102	-1.51	103	84	-0.040	3.92	0.42
220	32.476	0.148	2.25	102	-1.93	94	83	-0.050	3.77	0.43
221	32.629	0.153	2.25	102	-0.74	101	84	-0.040	3.81	0.40
222	32.776	0.147	2.24	102	-3.11	100	85	-0.040	3.79	0.43
223	32.929	0.153	2.26	102	-1.57	104	86	-0.040	3.80	0.41

BOX B TEST DATA - ASTM E3053 / ASTM E2515

Client: FPI
Model: F1150
Run #: 2

Job #: 19-496
Tracking #: 0031
Technician: SJB
Date: 7/23/2019

	Particulate Sampling Data							Flue Gas Data		
Elapsed Time (min)	Gas Meter (ft^3)	Sample Rate (cfm)	Orifice dH (in H_2O)	Meter Temp (°F)	Meter Vacuum (in Hg)	Pro. Rate (%)	Filter (°F)	Flue Draft (in H_2O)	CO_2 (%)	CO (%)
224	33.076	0.147	2.24	102	-2.75	95	86	-0.040	3.75	0.39
225	33.228	0.152	2.25	102	-3.1	97	85	-0.050	3.87	0.41
226	33.376	0.148	2.25	102	-1.18	98	84	-0.040	3.81	0.38
227	33.527	0.151	2.24	102	-0.83	96	84	-0.040	3.70	0.40
228	33.677	0.150	2.24	102	-2.31	97	83	-0.040	3.66	0.37
229	33.828	0.151	2.25	102	-0.94	100	84	-0.040	3.69	0.39
230	33.979	0.151	2.28	102	-1.09	95	86	-0.040	3.64	0.38
231	34.127	0.148	2.26	102	-2.46	95	86	-0.030	3.46	0.37
232	34.278	0.151	2.25	102	-0.79	102	85	-0.030	3.51	0.39
233	34.426	0.148	2.25	102	-1.44	97	85	-0.050	3.41	0.40
234	34.578	0.152	2.24	102	-0.99	103	84	-0.050	3.55	0.38
235	34.726	0.148	2.25	102	-2.78	96	84	-0.040	3.47	0.43
236	34.879	0.153	2.25	102	-2.82	98	84	-0.040	3.37	0.42
237	35.027	0.148	2.25	102	-0.91	101	85	-0.040	3.39	0.39
238	35.179	0.152	2.26	102	-0.9	97	86	-0.030	3.17	0.39
239	35.326	0.147	2.24	102	-2.55	97	86	-0.030	3.36	0.38
240	35.478	0.152	2.24	102	-2.71	101	85	-0.040	3.31	0.34
241	35.627	0.149	2.24	102	-0.99	96	84	-0.030	3.26	0.37
242	35.778	0.151	2.24	102	-2.76	96	84	-0.020	3.16	0.31
243	35.929	0.151	2.24	102	-2.88	108	83	-0.040	3.17	0.37
244	36.079	0.150	2.24	102	-0.76	99	84	-0.040	3.17	0.37
245	36.229	0.150	2.25	102	-2.83	101	86	-0.030	3.07	0.35
246	36.377	0.148	2.25	102	-1.82	101	86	-0.040	3.10	0.38
247	36.529	0.152	2.24	102	-1.66	101	85	-0.030	2.99	0.35
248	36.677	0.148	2.24	102	-2.53	100	85	-0.030	2.86	0.36
249	36.830	0.153	2.24	102	-3.29	95	84	-0.050	3.03	0.32
250	36.978	0.148	2.24	103	-2.99	97	84	-0.030	2.93	0.34
251	37.131	0.153	2.23	103	-1.21	100	84	-0.030	3.03	0.32
252	37.278	0.147	2.25	103	-2.41	98	85	-0.040	3.00	0.33
253	37.430	0.152	2.23	103	-2.86	98	87	-0.040	2.85	0.35
254	37.578	0.148	2.25	103	-1.18	100	86	-0.030	2.86	0.33
255	37.729	0.151	2.24	103	-2.98	108	85	-0.050	2.83	0.32

BOX B TEST DATA - ASTM E3053 / ASTM E2515

Client: FPI
Model: F1150
Run #: 2

Job #: 19-496
Tracking #: 0031
Technician: SJB
Date: 7/23/2019

	Particulate Sampling Data							Flue Gas Data		
Elapsed Time (min)	Gas Meter (ft^3)	Sample Rate (cfm)	Orifice dH (in H_2O)	Meter Temp (°F)	Meter Vacuum (in Hg)	Pro. Rate (%)	Filter (°F)	Flue Draft (in H_2O)	CO_2 (%)	CO (%)
256	37.879	0.150	2.24	103	-1.78	106	85	-0.030	2.81	0.35
257	38.030	0.151	2.24	103	-2.94	105	84	-0.040	2.94	0.32
258	38.181	0.151	2.22	103	-0.85	95	83	-0.040	2.87	0.30
259	38.329	0.148	2.25	103	-3.33	99	84	-0.030	2.98	0.30
260	38.480	0.151	2.24	103	-1.58	99	85	-0.040	2.80	0.31
261	38.628	0.148	2.26	103	-0.74	96	87	-0.040	2.89	0.33
262	38.780	0.152	2.24	103	-1.69	100	86	-0.040	2.73	0.33
263	38.929	0.149	2.24	103	-3.21	99	85	-0.030	2.75	0.34
264	39.081	0.152	2.25	103	-2.29	95	84	-0.040	2.82	0.34
265	39.229	0.148	2.23	103	-0.86	97	84	-0.030	2.79	0.31
266	39.381	0.152	2.25	103	-2.92	101	83	-0.040	2.80	0.29
267	39.528	0.147	2.24	103	-2.62	93	84	-0.030	2.79	0.33
268	39.680	0.152	2.25	103	-2.13	99	86	-0.040	2.74	0.32
269	39.829	0.149	2.24	103	-2.6	102	87	-0.040	2.79	0.31
270	39.981	0.152	2.25	103	-0.73	103	85	-0.040	2.76	0.32
271	40.131	0.150	2.26	103	-1.51	99	85	-0.040	2.92	0.32
272	40.281	0.150	2.23	103	-1.7	99	84	-0.030	2.86	0.32
273	40.432	0.151	2.26	103	-0.95	104	84	-0.030	2.63	0.30
274	40.580	0.148	2.24	103	-0.89	99	84	-0.050	2.84	0.31
275	40.732	0.152	2.23	103	-1.84	98	85	-0.040	2.75	0.30
276	40.879	0.147	2.24	103	-1.42	97	87	-0.030	2.75	0.28
277	41.033	0.154	2.25	103	-0.79	102	86	-0.030	2.80	0.31
278	41.181	0.148	2.24	103	-2.26	100	85	-0.030	2.71	0.32
279	41.333	0.152	2.24	103	-2.75	102	85	-0.030	2.79	0.34
280	41.481	0.148	2.24	103	-3.19	98	84	-0.040	2.81	0.30
281	41.632	0.151	2.24	103	-1.77	98	83	-0.030	2.82	0.28
282	41.781	0.149	2.25	103	-0.87	94	84	-0.020	2.67	0.31
283	41.932	0.151	2.24	103	-2.05	104	85	-0.030	2.52	0.30
284	42.082	0.150	2.24	103	-1.17	107	86	-0.020	2.52	0.29
Avg/Tot	42.082	0.148	2.22	96	-1.90	100	85	-0.050	5.26	0.37

WOODSTOVE SURFACE TEMPERATURE DATA

Client: FPI
Model: F1150
Run #: 2

Job #: 19-496
Tracking #: 0031
Technician: SJB
Date: 7/23/2019

	Temperature Data (°F)						
Elapsed Time (min)	FB Left	FB Right	FB Back	FB Top	FB Bottom	Stove Surface Average	Catalyst Exit
0	530	497	354	394	185	392.0	N/A
1	529	498	372	384	188	394.2	N/A
2	526	493	382	379	189	393.8	N/A
3	521	487	388	399	191	397.2	N/A
4	513	479	392	416	193	398.6	N/A
5	505	473	395	429	193	399.0	N/A
6	497	467	399	457	195	403.0	N/A
7	488	462	404	478	200	406.4	N/A
8	481	457	410	478	204	406.0	N/A
9	476	453	416	480	207	406.4	N/A
10	470	449	420	472	211	404.4	N/A
11	465	445	423	472	213	403.6	N/A
12	461	444	424	477	215	404.2	N/A
13	457	442	426	464	217	401.2	N/A
14	453	439	427	470	219	401.6	N/A
15	449	439	428	472	220	401.6	N/A
16	445	436	393	495	222	398.2	N/A
17	442	435	380	495	223	395.0	N/A
18	440	435	371	496	224	393.2	N/A
19	437	434	363	492	224	390.0	N/A
20	435	433	358	495	225	389.2	N/A
21	433	434	352	498	225	388.4	N/A
22	430	435	348	501	224	387.6	N/A
23	429	433	345	507	225	387.8	N/A
24	427	434	342	514	224	388.2	N/A
25	425	437	341	508	224	387.0	N/A
26	422	436	339	501	224	384.4	N/A
27	421	435	338	509	222	385.0	N/A
28	420	437	337	504	222	384.0	N/A
29	418	437	335	500	221	382.2	N/A
30	417	438	334	496	221	381.2	N/A
31	416	439	334	496	220	381.0	N/A
32	414	441	334	498	219	381.2	N/A
33	413	442	334	505	218	382.4	N/A
34	412	443	333	505	219	382.4	N/A
35	412	443	334	505	218	382.4	N/A
36	411	446	335	504	217	382.6	N/A
37	410	447	335	514	217	384.6	N/A
38	410	448	336	509	216	383.8	N/A
39	410	450	338	512	216	385.2	N/A
40	410	452	338	520	214	386.8	N/A
41	410	454	339	518	214	387.0	N/A
42	410	454	340	522	213	387.8	N/A
43	411	455	342	522	213	388.6	N/A
44	411	458	343	531	212	391.0	N/A
45	412	460	344	529	212	391.4	N/A
46	412	460	345	533	211	392.2	N/A
47	414	463	346	540	211	394.8	N/A

WOODSTOVE SURFACE TEMPERATURE DATA

Client: FPI
Model: F1150
Run #: 2

Job #: 19-496
Tracking #: 0031
Technician: SJB
Date: 7/23/2019

	Temperature Data (°F)						
Elapsed Time (min)	FB Left	FB Right	FB Back	FB Top	FB Bottom	Stove Surface Average	Catalyst Exit
48	414	464	347	536	210	394.2	N/A
49	416	466	348	539	210	395.8	N/A
50	417	468	348	528	210	394.2	N/A
51	419	469	350	527	209	394.8	N/A
52	421	468	349	523	210	394.2	N/A
53	422	466	349	514	209	392.0	N/A
54	423	468	350	497	209	389.4	N/A
55	424	466	350	491	209	388.0	N/A
56	424	465	349	480	208	385.2	N/A
57	425	462	349	472	208	383.2	N/A
58	425	460	348	464	208	381.0	N/A
59	425	458	346	455	208	378.4	N/A
60	425	454	345	451	208	376.6	N/A
61	424	453	343	441	208	373.8	N/A
62	423	451	342	437	208	372.2	N/A
63	423	450	340	431	207	370.2	N/A
64	421	447	338	424	207	367.4	N/A
65	421	445	337	422	207	366.4	N/A
66	419	444	335	411	207	363.2	N/A
67	418	442	333	406	208	361.4	N/A
68	417	439	331	398	207	358.4	N/A
69	415	434	329	398	207	356.6	N/A
70	414	434	326	396	207	355.4	N/A
71	413	431	324	390	207	353.0	N/A
72	412	427	323	393	207	352.4	N/A
73	411	424	321	390	207	350.6	N/A
74	410	424	319	382	206	348.2	N/A
75	409	422	317	382	206	347.2	N/A
76	409	419	315	384	206	346.6	N/A
77	408	417	313	377	205	344.0	N/A
78	408	414	311	383	205	344.2	N/A
79	407	414	309	380	205	343.0	N/A
80	407	411	307	376	205	341.2	N/A
81	407	409	306	366	205	338.6	N/A
82	408	407	303	364	205	337.4	N/A
83	408	408	302	358	204	336.0	N/A
84	409	405	300	358	204	335.2	N/A
85	409	402	300	355	204	334.0	N/A
86	408	403	299	349	204	332.6	N/A
87	408	401	299	350	204	332.4	N/A
88	407	399	297	350	204	331.4	N/A
89	405	399	297	346	203	330.0	N/A
90	405	397	297	344	203	329.2	N/A
91	404	396	297	348	204	329.8	N/A
92	403	395	297	342	203	328.0	N/A
93	402	394	298	344	204	328.4	N/A
94	402	393	298	345	204	328.4	N/A
95	401	393	299	342	204	327.8	N/A

WOODSTOVE SURFACE TEMPERATURE DATA

Client: FPI
Model: F1150
Run #: 2

Job #: 19-496
Tracking #: 0031
Technician: SJB
Date: 7/23/2019

	Temperature Data (°F)						
Elapsed Time (min)	FB Left	FB Right	FB Back	FB Top	FB Bottom	Stove Surface Average	Catalyst Exit
96	401	392	299	345	204	328.2	N/A
97	400	391	300	347	204	328.4	N/A
98	400	390	301	347	204	328.4	N/A
99	400	389	302	344	204	327.8	N/A
100	400	386	303	344	204	327.4	N/A
101	400	387	304	340	205	327.2	N/A
102	400	388	305	339	205	327.4	N/A
103	401	385	306	339	205	327.2	N/A
104	400	385	307	342	205	327.8	N/A
105	400	385	309	337	205	327.2	N/A
106	401	382	310	336	205	326.8	N/A
107	400	383	311	328	205	325.4	N/A
108	400	384	311	323	205	324.6	N/A
109	400	381	313	327	205	325.2	N/A
110	400	382	314	323	206	325.0	N/A
111	400	381	315	317	206	323.8	N/A
112	399	381	316	316	206	323.6	N/A
113	399	380	317	314	207	323.4	N/A
114	399	379	318	309	207	322.4	N/A
115	399	379	319	312	207	323.2	N/A
116	399	379	320	307	208	322.6	N/A
117	399	379	320	305	208	322.2	N/A
118	398	376	321	304	208	321.4	N/A
119	398	378	323	302	208	321.8	N/A
120	398	378	323	300	209	321.6	N/A
121	397	379	324	301	209	322.0	N/A
122	397	378	324	300	210	321.8	N/A
123	396	378	326	298	210	321.6	N/A
124	396	378	326	291	210	320.2	N/A
125	396	374	328	293	211	320.4	N/A
126	396	379	328	292	211	321.2	N/A
127	396	379	329	290	211	321.0	N/A
128	396	378	329	289	212	320.8	N/A
129	396	378	329	291	212	321.2	N/A
130	396	378	330	288	212	320.8	N/A
131	396	379	330	286	213	320.8	N/A
132	396	377	331	282	213	319.8	N/A
133	396	376	330	283	213	319.6	N/A
134	396	376	330	280	214	319.2	N/A
135	397	376	330	283	214	320.0	N/A
136	397	376	331	282	215	320.2	N/A
137	397	374	331	280	215	319.4	N/A
138	397	374	330	281	215	319.4	N/A
139	397	376	331	274	216	318.8	N/A
140	398	374	330	276	216	318.8	N/A
141	398	371	330	278	216	318.6	N/A
142	398	375	329	278	216	319.2	N/A
143	399	374	328	280	217	319.6	N/A

WOODSTOVE SURFACE TEMPERATURE DATA

Client: FPI
Model: F1150
Run #: 2

Job #: 19-496
Tracking #: 0031
Technician: SJB
Date: 7/23/2019

	Temperature Data (°F)						
Elapsed Time (min)	FB Left	FB Right	FB Back	FB Top	FB Bottom	Stove Surface Average	Catalyst Exit
144	399	374	328	276	217	318.8	N/A
145	400	372	328	277	218	319.0	N/A
146	400	372	329	275	218	318.8	N/A
147	400	373	328	272	218	318.2	N/A
148	401	373	328	277	218	319.4	N/A
149	401	371	327	274	219	318.4	N/A
150	401	370	327	272	218	317.6	N/A
151	402	371	325	271	219	317.6	N/A
152	401	368	323	270	219	316.2	N/A
153	401	368	321	273	219	316.4	N/A
154	402	368	319	273	219	316.2	N/A
155	401	364	317	271	220	314.6	N/A
156	400	366	315	271	220	314.4	N/A
157	400	367	313	269	219	313.6	N/A
158	400	364	311	268	219	312.4	N/A
159	399	363	309	264	219	310.8	N/A
160	398	365	307	264	219	310.6	N/A
161	398	362	306	263	219	309.6	N/A
162	397	361	304	264	219	309.0	N/A
163	396	360	302	264	219	308.2	N/A
164	395	360	301	261	219	307.2	N/A
165	395	360	300	261	219	307.0	N/A
166	394	359	298	260	219	306.0	N/A
167	394	359	297	262	219	306.2	N/A
168	393	358	296	262	219	305.6	N/A
169	392	357	295	258	219	304.2	N/A
170	391	356	294	256	219	303.2	N/A
171	391	357	294	255	219	303.2	N/A
172	390	354	293	256	218	302.2	N/A
173	390	355	292	257	218	302.4	N/A
174	389	355	291	256	218	301.8	N/A
175	389	354	290	255	218	301.2	N/A
176	389	352	289	257	218	301.0	N/A
177	388	352	287	255	218	300.0	N/A
178	389	351	286	256	217	299.8	N/A
179	388	352	285	255	217	299.4	N/A
180	388	350	284	254	217	298.6	N/A
181	388	351	282	254	217	298.4	N/A
182	387	350	281	253	216	297.4	N/A
183	387	347	280	251	217	296.4	N/A
184	387	350	279	251	216	296.6	N/A
185	387	349	278	252	215	296.2	N/A
186	387	346	277	252	216	295.6	N/A
187	387	346	277	253	216	295.8	N/A
188	387	345	276	251	216	295.0	N/A
189	386	346	275	249	215	294.2	N/A
190	387	344	274	249	215	293.8	N/A
191	386	344	273	250	214	293.4	N/A

WOODSTOVE SURFACE TEMPERATURE DATA

Client: FPI
Model: F1150
Run #: 2

Job #: 19-496
Tracking #: 0031
Technician: SJB
Date: 7/23/2019

	Temperature Data (°F)						
Elapsed Time (min)	FB Left	FB Right	FB Back	FB Top	FB Bottom	Stove Surface Average	Catalyst Exit
192	386	343	272	250	214	293.0	N/A
193	385	345	271	244	214	291.8	N/A
194	385	345	270	250	214	292.8	N/A
195	385	343	269	249	213	291.8	N/A
196	385	342	268	248	213	291.2	N/A
197	385	344	267	246	213	291.0	N/A
198	385	343	267	248	213	291.2	N/A
199	384	342	266	245	212	289.8	N/A
200	384	344	266	248	212	290.8	N/A
201	384	342	265	242	211	288.8	N/A
202	384	341	264	243	211	288.6	N/A
203	383	340	264	245	211	288.6	N/A
204	383	341	263	246	211	288.8	N/A
205	382	340	262	242	211	287.4	N/A
206	383	340	262	243	211	287.8	N/A
207	382	339	261	245	210	287.4	N/A
208	382	340	260	241	210	286.6	N/A
209	381	339	260	242	210	286.4	N/A
210	381	338	259	241	210	285.8	N/A
211	381	338	259	238	209	285.0	N/A
212	381	338	258	242	209	285.6	N/A
213	380	337	257	241	209	284.8	N/A
214	380	336	257	240	208	284.2	N/A
215	380	337	256	240	208	284.2	N/A
216	380	332	255	241	209	283.4	N/A
217	379	335	255	237	208	282.8	N/A
218	379	333	254	241	208	283.0	N/A
219	379	334	253	240	208	282.8	N/A
220	379	333	253	240	208	282.6	N/A
221	378	332	252	239	207	281.6	N/A
222	378	331	252	240	207	281.6	N/A
223	378	333	251	236	207	281.0	N/A
224	377	332	251	238	207	281.0	N/A
225	377	332	250	237	207	280.6	N/A
226	377	332	250	238	207	280.8	N/A
227	376	332	250	237	206	280.2	N/A
228	376	332	249	236	206	279.8	N/A
229	375	331	249	234	206	279.0	N/A
230	375	332	248	236	206	279.4	N/A
231	374	329	248	234	206	278.2	N/A
232	373	329	247	234	206	277.8	N/A
233	372	328	247	232	205	276.8	N/A
234	371	327	247	232	205	276.4	N/A
235	371	327	246	235	205	276.8	N/A
236	370	328	246	233	205	276.4	N/A
237	369	324	246	234	205	275.6	N/A
238	368	326	245	229	204	274.4	N/A
239	366	325	244	231	204	274.0	N/A

WOODSTOVE SURFACE TEMPERATURE DATA

Client: FPI
Model: F1150
Run #: 2

Job #: 19-496
Tracking #: 0031
Technician: SJB
Date: 7/23/2019

	Temperature Data (°F)						
Elapsed Time (min)	FB Left	FB Right	FB Back	FB Top	FB Bottom	Stove Surface Average	Catalyst Exit
240	365	324	243	231	204	273.4	N/A
241	364	324	243	230	204	273.0	N/A
242	364	321	242	229	204	272.0	N/A
243	362	322	241	227	203	271.0	N/A
244	361	322	241	227	203	270.8	N/A
245	360	319	240	226	203	269.6	N/A
246	359	319	239	224	202	268.6	N/A
247	357	318	239	223	202	267.8	N/A
248	356	318	238	222	202	267.2	N/A
249	355	316	238	222	202	266.6	N/A
250	353	314	237	223	202	265.8	N/A
251	352	313	236	223	202	265.2	N/A
252	351	313	235	221	201	264.2	N/A
253	350	312	235	220	201	263.6	N/A
254	348	312	234	220	200	262.8	N/A
255	347	310	234	218	200	261.8	N/A
256	346	310	233	218	200	261.4	N/A
257	344	309	232	217	199	260.2	N/A
258	343	308	232	217	200	260.0	N/A
259	342	306	231	217	199	259.0	N/A
260	340	307	230	216	199	258.4	N/A
261	339	304	230	217	198	257.6	N/A
262	338	302	229	213	198	256.0	N/A
263	337	302	228	213	197	255.4	N/A
264	336	299	228	212	198	254.6	N/A
265	335	300	226	212	197	254.0	N/A
266	334	298	226	211	197	253.2	N/A
267	333	299	225	210	196	252.6	N/A
268	332	296	224	211	196	251.8	N/A
269	331	296	224	211	196	251.6	N/A
270	330	294	223	211	195	250.6	N/A
271	329	294	222	208	195	249.6	N/A
272	328	294	222	209	194	249.4	N/A
273	327	293	221	206	194	248.2	N/A
274	326	290	220	205	194	247.0	N/A
275	325	291	219	203	193	246.2	N/A
276	324	290	219	204	193	246.0	N/A
277	324	289	218	202	193	245.2	N/A
278	323	289	217	200	192	244.2	N/A
279	322	287	216	200	192	243.4	N/A
280	321	286	216	200	192	243.0	N/A
281	321	284	215	201	191	242.4	N/A
282	320	285	214	199	191	241.8	N/A
283	319	283	214	198	190	240.8	N/A
284	319	282	213	198	190	240.4	N/A
Average	395	377	299	321	209	320	N/A

LAB SAMPLE DATA - ASTM E2515

Client: FPI
Model: F1150
Run #: 2

Job #: 19-496
Tracking #: 0031
Technician: SJB
Date: 7/23/2019

	Sample ID	Tare, mg	Total, mg	Final, mg	Catch, mg
Train A Filters - First Hour	T265	89.1	89.1	91.0	1.9
Train A Filters - Remainder	T266	89.6	178.1	178.9	0.8
	T267	88.5			
Train A Probe	9A	116714.2	116714.2	116714.3	0.1
Train A O-Rings	9A	3580.1	3580.1	3580.6	0.5
Train B Filters	T268	88.2	176.0	177.9	1.9
	T269	87.8			
Train B Probe	9B	117920.3	117920.3	117920.4	0.1
Train B O-Rings	9B	3522.7	3522.7	3524.0	1.3
Background Filter	T270	88.2	88.2	88.3	0.1

Placed in Dessicator on:	7/23 - 16:30

Train A Filters - First Hour	91.0	7/25 7:49	91.0	7/26 8:34				
Train A Filters - Remainder	178.9	7/25 7:49	178.9	7/26 8:34				
Train A Probe	116714.2	7/25 7:50	116714.3	7/26 8:34				
Train A O-Rings	3580.5	7/25 7:50	3580.6	7/26 8:34				
Train B Filters	177.8	7/25 7:50	177.9	7/26 8:34				
Train B Probe	117920.3	7/25 7:50	117920.4	7/26 8:34				
Train B O-Rings	3523.8	7/25 7:50	3524.0	7/26 8:35				
Background Filter	88.3	7/25 7:50	88.3	7/26 8:35				

1st hour Sub-Total, mg:	1.9
Remainder Sub-Total, mg:	1.4
Train 1 Aggregate, mg:	**3.3**
Train 2 Aggregate, mg:	**3.3**
Ambient Aggregate, mg:	0.1

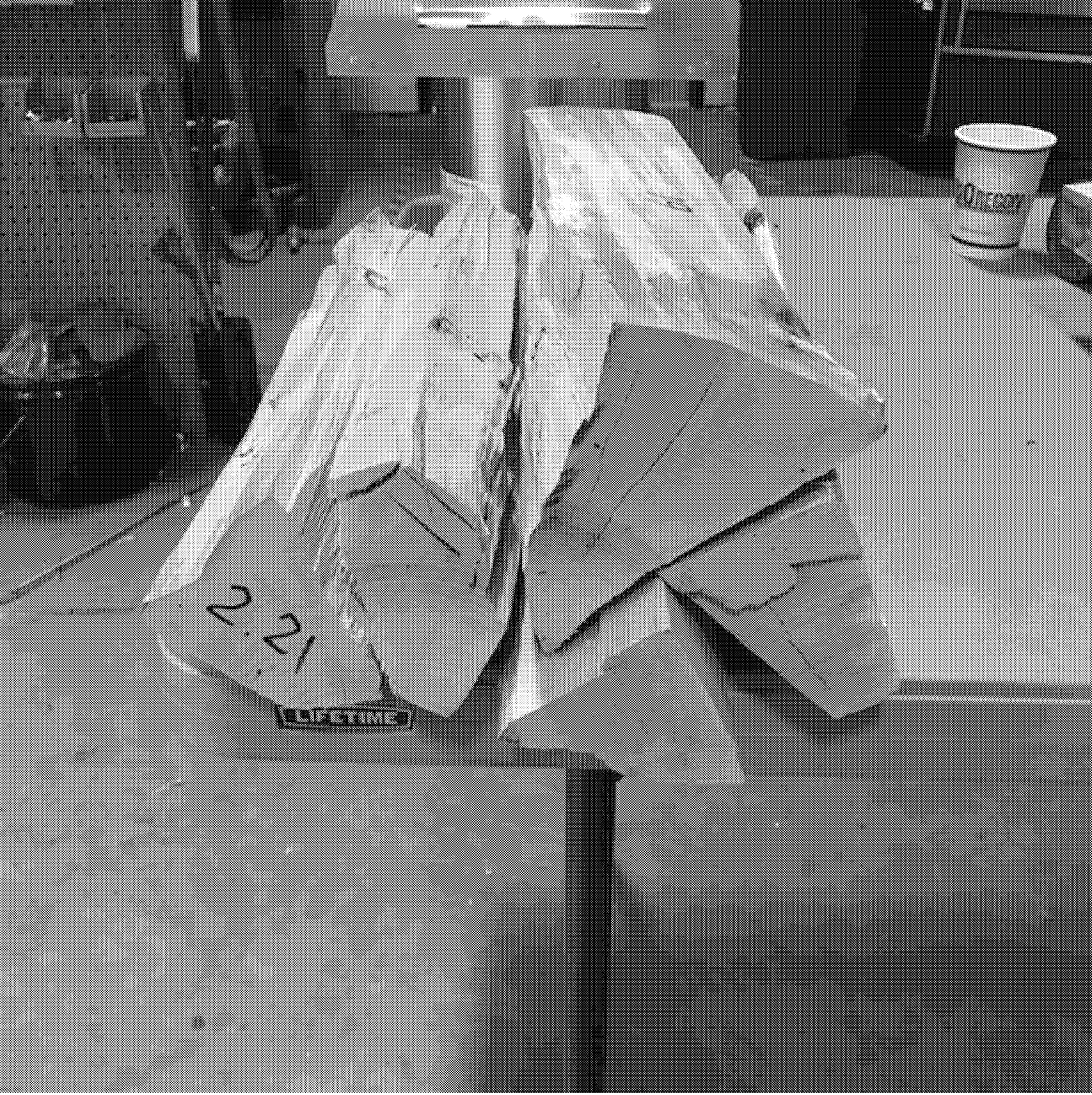
2.21

9W (5)

ASTM E3053 Wood Heater Run Sheets

Client: FPI | Job Number: 19-496 | Tracking #: 0031
Model: F1150 | Run Number: 2 | Test Date: 7/23/2019

Wood Heater Run Notes

Pre-Test Notes
Pre-Test Start Time: 10:04
Air Control Setting: Full Open

Time	Notes
0 min	Started with 0.9 lbs of kindling, propane torch for 20 seconds, door left cracked open.
2 min	Door closed.
4 min	@0.2 lbs added remaining kindling and a couple start-up pieces, 1.7 lbs total
13 min	@0.5 lbs, added remaining start-up fuel, 1.5 lbs.
18 min	@1.0 lbs, leveled coal bed and loaded high fire fuel load, door closed in 40 seconds.
32 min	Turned fan on high.
67 min	@3.0 lbs stirred fuel to ensure uniform charcoalization of coal bed
82 min	@1.7 lbs leveled coal bed, zeroed scale, and turned off fan in preparation of fuel loading.

Test Notes
Test Burn Start Time: 11:28
Air Control Setting: Low Fire Air Setting

Time	Notes
0 min	Loaded low fire test fuel, loading done at 30 seconds, door closed at 45 seconds.
6 min	Set air control to test setting.
15 min	Fan turn on to low setting.
60 min	Changed 1-hr filter.
284 min	End of test.

Test Burn End Time: 16:12

Flue Gas Concentration Measurement

Calibration Gas Values: Span Gas CO_2 (%): 17.00 CO (%): 4.310
Mid Gas CO_2 (%): 10.00 CO (%): 2.51

Calibration Results:

	Pre Test			Post Test		
	Zero	Mid	Span	Zero	Mid	Span
Time	9:55	9:59	9:57	16:35	16:37	16:39
CO_2	0.00	10.05	17.00	-0.01	9.89	16.98
CO	0.000	2.481	4.309	-0.020	2.429	4.287

Flue Gas Probe Leak Check: Initial: No Leakage Final: No Leakage

Technician Signature: Date: 7/24/2019

ED_005996_00000513-00135

ASTM E3053 Wood Heater Run Sheets

Client: FPI | Job Number: 19-496 | Tracking #: 0031
Model: F1150 | Run Number: 2 | Test Date: 7/23/2019

Test Photos

Kindling Fuel Load

Start-up Fuel Load

High Fire Fuel Load

Residual Start-up Fuel Coal Bed

Technician Signature: _____ Date: 7/24/2019

ED_005996_00000513-00136

ASTM E3053 Wood Heater Run Sheets

Client: FPI | Job Number: 19-496 | Tracking #: 0031
Model: F1150 | Run Number: 2 | Test Date: 7/23/2019

High Fire Fuel Loaded

Residual High Fire Load Coal Bed

Low Fire Fuel Load

Low Fire Fuel Loaded

Technician Signature: _____ Date: 7/24/2019

ED_005996_00000513-00137

WOOD STOVE TEST DATA PACKET
ASTM E3053/E2515

Run 3 Data Summary

Client: FPI
Model: F1150
Job #: 19-496
Tracking #: 0031
Test Date: 7/24/2019

7/26/2019

Techician Signature | Date

ED_005996_00000513-00141

TEST RESULTS - ASTM E3053 / ASTM E2515

Client: FPI
Model: F1150
Run #: 3

Job #: 19-496
Tracking #: 0031
Technician: SJB
Date: 7/24/2019

Burn Rate (kg/hr):	1.19

	Ambient Sample	Sample Train A	Sample Train B	1st Hour Filter
Total Sample Volume (ft^3)	43.553	33.523	32.510	8.672
Average Gas Velocity in Dilution Tunnel (ft/sec)	17.66			
Average Gas Flow Rate in Dilution Tunnel (dscf/hr)	11561.1			
Average Gas Meter Temperature (°F)	77.8	95.2	93.8	84.0
Total Sample Volume (dscf)	42.696	32.237	31.243	8.508
Average Tunnel Temperature (°F)	102.2			
Total Time of Test (min)	223			
Total Particulate Catch (mg)	0.1	4.2	3.6	2.7
Particulate Concentration, dry-standard (g/dscf)	0.0000023	0.0001303	0.0001152	0.0003173
Total PM Emissions (g)	0.10	5.50	4.85	3.64
Particulate Emission Rate (g/hr)	0.03	1.48	1.31	3.64
Emissions Factor (g/kg)	-	1.24	1.09	-
Difference from Average Total Particulate Emissions (g)	-	0.32	0.32	-
Difference from Average Emissions Factor (g/kg)	-	0.07	0.07	-

Final Average Results	
Total Particulate Emissions (g)	5.17
Particulate Emission Rate (g/hr)	1.39
Emissions Factor (g/kg)	1.16
HHV Efficiency (%)	70.5%
LHV Efficiency (%)	75.4%
CO Emissions (g/min)	1.22

Quality Checks	Requirement	Observed	Result
Dual Train Precision	Each train within 7.5% of average emissions (in grams), or emission factors within 0.5 g/kg	See Above	OK
Filter Temps	>80 °F, <90 °F	Min: 83 / Max: 86	OK
Face Velocity	< 30 ft/min	8.5	OK
Leakage Rate	Less than 4% of average sample rate	0.002 cfm	OK
Ambient Temp	55-90 °F	Min: 76 / Max: 80	OK
Negative Probe Weight Evaluation	<5% of Total Catch	Probe Catch Not Negative	OK
Pro-Rate Variation	90% of readings between 90-110%; none greater than 120% or less than 80%	See Data Tabs	CHECK 10 MIN. INTERVAL PRO-RATES

B415.1 Efficiency Results

Manufacturer:	FPI
Model:	F1150
Date:	07/24/19
Run:	3
Control #:	19-496
Test Duration:	223
Output Category:	Medium

Test Results in Accordance with CSA B415.1-09

	HHV Basis	LHV Basis
Overall Efficiency	70.5%	75.4%
Combustion Efficiency	96.1%	96.1%
Heat Transfer Efficiency	73.4%	78.5%

Output Rate (kJ/h)	16,806	15,942	**(Btu/h)**
Burn Rate (kg/h)	1.19	2.63	**(lb/h)**
Input (kJ/h)	23,827	22,602	**(Btu/h)**

Test Load Weight (dry kg)	4.44	9.78	**dry lb**
MC wet (%)	17.13		
MC dry (%)	20.67		
Particulate (g)	5.17		
CO (g)	273		
Test Duration (h)	3.72		

Emissions	**Particulate**	**CO**
g/MJ Output	0.08	4.37
g/kg Dry Fuel	1.17	61.52
g/h	1.39	73.44
g/min	0.02	1.22
lb/MM Btu Output	0.19	10.16

Air/Fuel Ratio (A/F)	20.27

VERSION: **2.2** **12/14/2009**

HIGH FIRE FUEL LOAD DATA - ASTM E3053

Client:	FPI	Job #:	19-496
Model:	F1150	Tracking #	0031
Run #:	3	Technician:	SJB
		Date:	7/24/2019

Nominal Loading Density (lbs/ft^3, wet basis):	10		
Usable Firebox Volume (ft^3):	0.98		
Target Load Weight (lbs):	9.80		
Total Load Weight Range (lbs):	9.30	to	10.30
Core Load Weight Range (lbs):	4.40	to	6.40
Remainder Load Weight Range (lbs):	3.40	to	5.40
Core Load Piece Range (lbs):	1.50	to	2.50
Remainder Load Piece Range (lbs):	1.00	to	5.40
Max Allowable Kindling Weight (lbs):	1.90		
Max Allowable Start-up Fuel Weight (lbs):	2.85		

CORE LOAD DATA

				Fuel Piece Moisture Readings (%DB)					Dry Weight	
Piece #	Length (in)	Weight (lbs)	Within Spec?	1	2	3	Ave.	Within Spec?	lbs	kg
1	17.00	1.80	In Range	22.4	18.6	19.4	20.1	In Range	1.50	0.68
2	17.00	1.66	In Range	20.4	19.7	18.3	19.5	In Range	1.39	0.63
3	17.00	1.68	In Range	20.1	20.2	18.6	19.6	In Range	1.40	0.64
Core Load Wt. (lbs)		5.14	In Range							

REMAINDER LOAD DATA (1 to 3 Pieces)

				Fuel Piece Moisture Readings (%DB)					Dry Weight	
Piece #	Length (in)	Weight (lbs)	Within Spec?	1	2	3	Ave.	Within Spec?	lbs	kg
1	17.00	1.77	In Range	19.4	24.8	20.4	21.5	In Range	1.46	0.66
2	17.00	1.53	In Range	27.4	19.2	19.6	22.1	In Range	1.25	0.57
3	17.00	1.06	In Range	24.6	23.9	23.7	24.1	In Range	0.85	0.39
Remainder Load (lbs)		4.36	In Range							

Total Load Weight (lbs):	9.50	In Range	
Core Load % of Total Weight:	54%	In Range	45-65%
Remainder % of Total Weight:	46%	In Range	35-55%
Total Load % of Target Weight:	97%	In Range	95-105%
Actual Fuel Loading Density (lb/ft3):	9.7		
Total Load Average Moisture Content (%DB):	20.9	In Range	19-25%
Total Load Average Moisture Content (%WB):	17.3		
Total Test Load Weight (dry basis):	7.86 lbs	3.56 kg	

KINDLING AND START-UP FUEL

		Kindling Moisture Readings (%DB)					Dry Weight	
Kindling Weight (lbs)	Within Spec?	1	2	3	Avg.	Within Spec?	lbs	kg
1.52	In Range	10	10	10	10.0	In Range	1.38	0.63

		Start-up Moisture Readings (%DB)					Dry Weight	
Start-up Fuel Wt. (lb)	Within Spec?	1	2	3	Avg.	Within Spec?	lbs	kg
2.51	In Range	18.7	19.8	20.6	19.7	In Range	2.10	0.95

TEST FUEL LOADING RANGE

Allowable Residual Start-up Fuel Range (lb):	1.0	to	1.9	
Actual Residual Start-up Fuel Weight (lb):		1.1		In Range

LOW & MEDIUM FIRE FUEL LOAD DATA - ASTM E3053

Client:	FPI	Job #:	19-496
Model:	F1150	Tracking #	0031
Run #:	3	Technician:	SJB
		Date:	7/24/2019

Nominal Loading Density (lbs/ft^3, wet basis):	12		
Usable Firebox Volume (ft^3):	0.98		
Target Load Weight (lbs):	11.76		
Total Load Weight Range (lbs):	11.17	to	12.35
Core Load Weight Range (lbs):	5.29	to	7.64
Remainder Load Weight Range (lbs):	4.12	to	6.47
Core Load Piece Range (lbs):	1.76	to	2.94
Remainder Load Piece Range (lbs):	1.18	to	3.53

CORE LOAD DATA

				Fuel Piece Moisture Readings (%DB)					Dry Weight	
Piece #	Length (in)	Weight (lbs)	Within Spec?	1	2	3	Ave.	Within Spec?	lbs	kg
1	17.00	2.63	In Range	20.6	18.6	24.8	21.3	In Range	2.17	0.98
2	17.00	2.03	In Range	19.6	20.6	23.6	21.3	In Range	1.67	0.76
3	17.00	2.00	In Range	18.7	20.7	22.1	20.5	In Range	1.66	0.75
Core Load Wt. (lbs)		6.66	In Range							

REMAINDER LOAD DATA (2 to 3 Pieces)

				Fuel Piece Moisture Readings (%DB)					Dry Weight	
Piece #	Length (in)	Weight (lbs)	Within Spec?	1	2	3	Ave.	Within Spec?	lbs	kg
1	17.00	3.43	In Range	20.0	19.8	18.9	19.6	In Range	2.87	1.30
2	17.00	1.72	In Range	19.2	26.8	18.2	21.4	In Range	1.42	0.64
3			NA				NA	NA	NA	NA
Remainder Load (lbs)		5.15	In Range							

Remainder Load Small/Large Piece Weight Ratio:	50%	In Range	≤ 67%
Total Load Weight (lbs):	11.81	In Range	
Core Load % of Total Weight:	56%	In Range	45-65%
Remainder % of Total Weight:	44%	In Range	35-55%
Total Load % of Target Weight:	100%	In Range	95-105%
Actual Fuel Loading Density (lb/ft3):	12.1		
Total Load Average Moisture Content (%DB):	20.7	In Range	19-25%
Total Load Average Moisture Content (%WB):	17.1		
Total Test Load Weight (dry basis):	9.79 lbs		4.44 kg

TEST FUEL LOADING RANGE

Allowable Charcoal Bed Weight Range (lb):	1.2	to	2.3	
Actual Charcoal Bed Wt. (lb):			1.7	In Range

TEST END POINT

Actual Fuel Load Ending Weight (lb):	0.0	Valid Test (≥90%)

Total Fuel Burned During Test Run:	11.8	lbs, wet basis
	9.8	lbs, dry basis
	4.44	kg, dry basis

DILUTION TUNNEL & MISC. DATA - ASTM E3053 / E2515

Client:	FPI	Job #:	19-496
Model:	F1150	Tracking #:	0031
Run #:	3	Technician:	SJB
Test Start Time:	11:22	Date:	7/24/2019
Test Type:	Medium Fire		

Recording Interval (min):	1
Total Sampling Time (min):	223

	Pre-Test	Post Test	Avg.
Barometric Pressure (in. Hg)	30.17	30.09	30.13
Relative Humidity (%)	38.1	27.5	
Room Air Velocity (ft/min)	0	0	
Scale Audit (lbs)	10.0	10.0	

Meter Box γ Factor:	0.999	(A)
Meter Box γ Factor:	0.996	(B)
Meter Box γ Factor:	0.992	(Ambient)

Ambient Sample Volume: 43.553 ft^3

Induced Draft Check (in. H_2O):	0
Smoke Capture Check (%):	100%
Date Flue Pipe Last Cleaned:	7/22/2019

Sample Train Post-Test Leak Checks

(A)	0.002	cfm @	-13	in. Hg
(B)	0.001	cfm @	-11	in. Hg
(Ambient)	0.002	cfm @	-14	in. Hg

DILUTION TUNNEL FLOW

Traverse Data

Point	dP (in H_2O)	Temp (°F)
1	0.058	130
2	0.078	130
3	0.080	130
4	0.056	130
5	0.062	130
6	0.080	130
7	0.082	130
8	0.058	130
Center	0.085	130

Static Pressure: -0.240 in. H_2O

Dilution Tunnel H_2O:	2.00	percent
Tunnel Diameter:	6	inches
Pitot Tube Cp:	0.99	[unitless]
Dilution Tunnel MW(dry):	29.00	lb/lb-mole
Dilution Tunnel MW(wet):	28.78	lb/lb-mole
Tunnel Area:	0.1963	ft^2
V_{strav}:	18.53	ft/sec
V_{scent}:	20.35	ft/sec
F_p:	0.911	[ratio]
Initial Tunnel Flow:	190.5	scf/min

TEST FUEL PROPERTIES

ASTM 3053-17 - Table A1.1 Fuel Properties by Fuel Species

Select Fuel Type	Species	%C	%H	%O	%Ash	MJ/kg	BTU/lb
	Ash, White	49.70	6.90	43.00	0.30	20.75	8927
	Beech	48.70	5.80	44.70	0.60	18.80	8088
	Birch, Sweet	49.80	6.50	43.40	0.30	20.12	8656
	Birch, Yellow	49.80	6.50	43.40	0.30	20.12	8656
	Doug Fir (Coast, Interior West/North)	48.73	6.87	43.90	0.50	19.81	8522
	Doug Fir (Interioir South)	48.73	6.87	43.90	0.50	19.81	8522
	Elm, Rock	50.40	6.60	42.30	0.70	20.49	8815
	Elm, Soft	50.40	6.60	42.30	0.70	20.49	8815
	Gum, Red	50.88	6.06	41.57	1.28	19.72	8478
	Larch, Western	50.54	6.36	42.40	0.70	17.58	7558
X	Maple, Hard	50.64	6.02	41.74	1.35	19.96	8587
	Maple, Sugar	50.64	6.02	41.74	1.35	19.96	8587
	Oak, Red	49.50	6.62	43.70	0.20	20.20	8690
	Oak, White	50.40	6.59	42.70	0.20	20.50	8819
	Pine, Southern	52.60	7.00	40.10	1.31	22.30	9587
	Pine, Southern Long Leaf	52.60	7.02	40.10	1.30	22.30	9594

WOODSTOVE PREBURN DATA

Client: FPI
Model: F1150
Run #: 3

Job #: 19-496
Tracking #: 0031
Technician: SJB
Date: 7/24/2019

Recording Interval (min): 1
Run Time (min): 79

			Temperatures (°F)							
Elapsed Time (min)	Scale Reading (lbs)	Flue Draft (in H_2O)	FB Left	FB Right	FB Back	FB Top	FB Bottom	Stove Surface Average	Flue	Ambient
0	0.9	0.007	74	74	74	73	73	73.6	73	72
1	0.8	-0.032	74	74	78	80	73	75.8	130	72
2	0.6	-0.053	76	77	89	88	74	80.8	199	72
3	0.5	-0.051	80	84	107	103	74	89.6	289	73
4	0.4	-0.036	86	94	118	124	74	99.2	263	73
5	0.3	-0.048	92	104	127	145	75	108.6	268	73
6	0.2	-0.057	99	114	137	163	75	117.6	287	73
7	1.8	-0.066	106	124	142	167	76	123.0	312	73
8	1.6	-0.076	112	133	150	193	77	133.0	399	73
9	1.4	-0.071	121	143	158	233	78	146.6	412	73
10	1.2	-0.073	131	155	169	280	78	162.6	431	73
11	1.0	-0.074	142	168	183	318	79	178.0	449	73
12	0.9	-0.085	155	183	196	352	80	193.2	456	73
13	0.6	-0.078	169	199	209	374	81	206.4	458	74
14	0.6	-0.074	183	216	223	398	82	220.4	457	73
15	0.5	-0.085	198	233	237	409	84	232.2	453	73
16	1.9	-0.089	213	248	250	394	86	238.2	504	74
17	1.7	-0.081	227	262	262	409	87	249.4	492	74
18	1.5	-0.085	242	275	274	438	89	263.6	491	74
19	1.4	-0.081	256	286	287	456	91	275.2	482	74
20	1.2	-0.069	270	297	299	458	93	283.4	477	74
21	1.1	-0.079	284	307	311	471	95	293.6	483	74
22	10.3	-0.079	298	317	324	477	99	303.0	537	75
23	10.2	-0.087	311	327	332	464	100	306.8	465	74
24	10.1	-0.076	321	336	338	466	102	312.6	463	75
25	10.0	-0.074	328	340	343	458	105	314.8	459	75
26	9.9	-0.083	334	344	347	445	106	315.2	447	75
27	9.6	-0.079	339	347	351	438	109	316.8	439	74
28	9.6	-0.083	344	345	353	434	111	317.4	435	74
29	9.5	-0.087	348	345	355	432	113	318.6	430	74
30	9.4	-0.078	353	345	357	427	115	319.4	433	74
31	9.3	-0.074	357	344	359	427	116	320.6	442	74
32	9.1	-0.079	361	344	361	435	118	323.8	457	74
33	9.0	-0.080	364	345	362	441	120	326.4	473	74
34	8.8	-0.093	368	344	365	451	122	330.0	486	74
35	8.7	-0.077	372	346	368	469	124	335.8	497	74
36	8.4	-0.083	377	349	371	480	125	340.4	521	75
37	8.1	-0.079	381	352	336	516	126	342.2	546	75
38	7.9	-0.088	386	356	324	522	127	343.0	550	75
39	7.7	-0.087	392	360	316	526	129	344.6	552	74
40	7.5	-0.088	397	364	311	549	129	350.0	557	74
41	7.2	-0.097	403	368	309	562	130	354.4	566	74
42	7.0	-0.101	409	374	308	570	131	358.4	573	75
43	6.7	-0.091	415	379	308	592	132	365.2	578	76

WOODSTOVE PREBURN DATA

Client: FPI
Model: F1150
Run #: 3

Job #: 19-496
Tracking #: 0031
Technician: SJB
Date: 7/24/2019

Recording Interval (min): 1
Run Time (min): 79

			Temperatures (°F)							
Elapsed Time (min)	Scale Reading (lbs)	Flue Draft (in H_2O)	FB Left	FB Right	FB Back	FB Top	FB Bottom	Stove Surface Average	Flue	Ambient
44	6.5	-0.099	421	381	309	608	133	370.4	586	76
45	6.2	-0.106	427	390	312	624	134	377.4	594	76
46	6.0	-0.105	432	394	314	639	134	382.6	598	76
47	5.7	-0.095	439	401	316	659	136	390.2	605	76
48	5.5	-0.097	445	406	319	663	136	393.8	597	76
49	5.2	-0.093	451	409	321	672	137	398.0	592	76
50	5.0	-0.096	458	417	324	678	138	403.0	586	76
51	4.8	-0.095	464	420	327	673	139	404.6	567	77
52	4.7	-0.091	471	427	330	651	140	403.8	550	77
53	4.4	-0.091	476	429	332	648	142	405.4	545	76
54	4.3	-0.097	482	441	333	631	143	406.0	538	77
55	4.2	-0.091	485	440	335	619	144	404.6	533	77
56	4.0	-0.080	489	446	337	619	145	407.2	530	77
57	3.8	-0.085	493	452	338	617	146	409.2	527	77
58	3.7	-0.102	497	454	339	609	148	409.4	526	77
59	3.5	-0.091	500	464	341	601	149	411.0	526	78
60	3.4	-0.088	503	468	342	603	151	413.4	525	77
61	3.3	-0.092	506	469	343	596	152	413.2	526	77
62	3.2	-0.077	508	472	343	588	153	412.8	519	77
63	3.1	-0.088	510	473	344	598	155	416.0	523	77
64	3.0	-0.093	513	479	345	602	157	419.2	519	77
65	2.8	-0.086	515	481	348	614	159	423.4	521	78
66	2.7	-0.064	517	484	349	613	161	424.8	518	77
67	2.5	-0.093	520	487	351	618	164	428.0	569	78
68	2.4	-0.092	524	491	355	631	165	433.2	540	77
69	2.3	-0.088	528	497	359	630	167	436.2	509	77
70	2.2	-0.071	532	499	362	616	169	435.6	489	78
71	2.2	-0.081	535	504	363	603	170	435.0	472	78
72	2.1	-0.076	536	502	363	580	171	430.4	462	78
73	2.1	-0.083	538	501	362	574	175	430.0	453	77
74	2.0	-0.078	539	499	360	559	176	426.6	446	77
75	2.0	-0.087	540	503	358	548	179	425.6	438	78
76	1.9	-0.065	539	499	357	538	181	422.8	428	78
77	1.9	-0.079	539	497	354	518	183	418.2	424	77
78	1.8	-0.079	536	494	352	513	184	415.8	421	77
79	1.8	-0.073	535	493	349	503	187	413.4	416	78

BOX A TEST DATA - ASTM E3053 / ASTM E2515

Client: FPI
Model: F1150
Run #: 3

Job #: 19-496
Tracking #: 0031
Technician: SJB
Date: 7/24/2019

	Particulate Sampling Data							Fuel Weight (lb)		Temperature Data (°F)			
Elapsed Time (min)	Gas Meter (ft^3)	Sample Rate (cfm)	Dilution Tunnel dP (in H_2O)	Orifice dH (in H_2O)	Meter Temp (°F)	Meter Vacuum (in Hg)	Pro. Rate (%)	Scale Reading	Weight Change	Dilution Tunnel	Flue	Filter	Ambient
0	0.000		0.081	0.02	77	-0.09		11.8		124	424	84	77
1	0.117	0.117	0.085	2.19	77	0	80	11.7	-0.1	126	391	85	78
2	0.264	0.147	0.081	2.15	77	-0.73	103	11.6	-0.1	125	431	85	78
3	0.404	0.140	0.084	2.13	77	-2.6	97	11.3	-0.3	131	497	85	77
4	0.550	0.146	0.083	2.27	77	-1.48	102	11.2	-0.1	135	542	85	77
5	0.694	0.144	0.083	2.27	77	-2.24	101	11.0	-0.2	138	568	85	77
6	0.841	0.147	0.082	2.26	77	-0.67	104	10.8	-0.2	140	590	84	77
7	0.984	0.143	0.082	2.22	77	-1.62	100	10.5	-0.3	134	565	84	78
8	1.130	0.146	0.079	2.20	77	-0.37	104	10.4	-0.1	130	525	84	77
9	1.274	0.144	0.084	2.21	78	0	99	10.2	-0.2	128	508	84	77
10	1.418	0.144	0.080	2.21	78	-2.68	102	10.0	-0.2	127	494	84	77
11	1.562	0.144	0.071	2.20	78	0	108	9.9	-0.1	126	489	84	77
12	1.707	0.145	0.081	2.20	78	-1.93	101	9.8	-0.1	122	486	84	76
13	1.852	0.145	0.081	2.19	79	-0.39	101	9.7	-0.1	125	479	83	76
14	1.995	0.143	0.091	2.20	79	-0.62	94	9.5	-0.2	125	482	83	77
15	2.142	0.147	0.077	2.18	79	-0.09	105	9.3	-0.2	124	487	83	76
16	2.285	0.143	0.084	2.19	79	-0.39	98	9.2	-0.1	122	488	83	77
17	2.432	0.147	0.082	2.17	80	-2.48	102	9.0	-0.2	123	487	83	77
18	2.573	0.141	0.079	2.19	80	-0.36	99	8.9	-0.1	123	490	84	77
19	2.720	0.147	0.080	2.18	80	-2.18	103	8.6	-0.3	122	486	85	77
20	2.861	0.141	0.083	2.18	81	0	97	8.6	0	122	485	85	76
21	3.008	0.147	0.090	2.16	81	-0.75	97	8.4	-0.2	122	491	86	77
22	3.149	0.141	0.079	2.18	81	-2.39	99	8.2	-0.2	122	490	86	78
23	3.296	0.147	0.071	2.16	82	-2.68	109	8.0	-0.2	123	491	85	78
24	3.438	0.142	0.076	2.18	82	-2.68	102	7.8	-0.2	123	496	85	77
25	3.585	0.147	0.086	2.16	82	0	99	7.7	-0.1	123	494	85	77
26	3.727	0.142	0.081	2.15	83	-2.51	98	7.5	-0.2	123	492	85	77
27	3.873	0.146	0.086	2.12	83	-1.76	98	7.4	-0.1	123	493	85	78
28	4.015	0.142	0.077	2.13	83	-1	101	7.2	-0.2	124	494	84	78
29	4.160	0.145	0.080	2.13	84	-1.84	101	7.0	-0.2	123	496	84	78
30	4.302	0.142	0.080	2.14	84	-1.59	99	6.8	-0.2	124	497	84	78
31	4.445	0.143	0.082	2.13	84	-2.53	98	6.7	-0.1	124	497	84	78
32	4.589	0.144	0.085	2.13	85	-2.62	97	6.5	-0.2	123	497	84	77

BOX A TEST DATA - ASTM E3053 / ASTM E2515

Client: FPI
Model: F1150
Run #: 3

Job #: 19-496
Tracking #: 0031
Technician: SJB
Date: 7/24/2019

	Particulate Sampling Data							Fuel Weight (lb)		Temperature Data (°F)			
Elapsed Time (min)	Gas Meter (ft^3)	Sample Rate (cfm)	Dilution Tunnel dP (in H_2O)	Orifice dH (in H_2O)	Meter Temp (°F)	Meter Vacuum (in Hg)	Pro. Rate (%)	Scale Reading	Weight Change	Dilution Tunnel	Flue	Filter	Ambient
33	4.732	0.143	0.074	2.13	85	-2.56	103	6.3	-0.2	124	500	84	78
34	4.878	0.146	0.077	2.13	85	0	103	6.1	-0.2	123	502	84	77
35	5.019	0.141	0.082	2.09	86	0	97	5.9	-0.2	126	500	83	78
36	5.165	0.146	0.078	2.10	86	-2.51	103	5.7	-0.2	125	499	83	78
37	5.305	0.140	0.089	2.10	86	-0.72	92	5.6	-0.1	124	499	83	78
38	5.450	0.145	0.088	2.08	87	-2.82	96	5.3	-0.3	123	497	83	77
39	5.593	0.143	0.079	2.22	87	-0.06	100	5.2	-0.1	124	499	83	79
40	5.743	0.150	0.073	2.20	87	-1.97	108	5.1	-0.1	122	500	83	78
41	5.886	0.143	0.076	2.20	87	-0.21	101	4.9	-0.2	123	495	83	78
42	6.036	0.150	0.080	2.21	88	-2.76	103	4.8	-0.1	122	497	83	79
43	6.180	0.144	0.075	2.20	88	-2.12	103	4.6	-0.2	122	493	83	79
44	6.329	0.149	0.081	2.22	88	-1.59	102	4.5	-0.1	123	498	83	78
45	6.473	0.144	0.081	2.21	89	-0.03	98	4.3	-0.2	121	495	83	79
46	6.622	0.149	0.087	2.20	89	-0.43	98	4.2	-0.1	122	493	83	79
47	6.765	0.143	0.075	2.19	89	-2.61	102	4.1	-0.1	121	491	83	79
48	6.915	0.150	0.081	2.20	89	-0.02	103	3.9	-0.2	122	492	83	79
49	7.058	0.143	0.079	2.21	90	-2.13	99	3.8	-0.1	120	496	83	79
50	7.208	0.150	0.083	2.21	90	-0.13	101	3.6	-0.2	123	494	84	79
51	7.351	0.143	0.080	2.20	90	-0.28	98	3.6	0	121	495	85	79
52	7.501	0.150	0.082	2.19	90	-0.85	102	3.3	-0.3	119	492	85	79
53	7.644	0.143	0.088	2.19	91	-0.26	93	3.4	0.1	120	489	85	78
54	7.793	0.149	0.094	2.20	91	-0.08	94	3.2	-0.2	120	485	85	78
55	7.937	0.144	0.079	2.17	91	-0.08	99	3.1	-0.1	119	485	85	79
56	8.086	0.149	0.079	2.21	91	0	103	3.0	-0.1	119	481	85	79
57	8.230	0.144	0.075	2.19	92	-2.82	102	2.9	-0.1	120	476	85	79
58	8.379	0.149	0.084	2.20	92	-1.41	99	2.8	-0.1	120	470	85	79
59	8.523	0.144	0.080	2.18	92	-0.18	98	2.8	0	117	465	85	79
60	8.672	0.149	0.083	2.18	92	-0.17	100	2.7	-0.1	118	458	84	79
61	8.827	0.155	0.089	2.36	93	0	100	2.6	-0.1	116	452	83	79
62	8.982	0.155	0.080	2.36	93	0	105	2.5	-0.1	116	446	84	79
63	9.132	0.150	0.078	2.38	93	0	103	2.5	0	115	440	84	79
64	9.284	0.152	0.077	2.37	93	0	105	2.4	-0.1	114	431	84	79
65	9.437	0.153	0.086	2.35	93	-0.38	100	2.3	-0.1	114	428	84	80

BOX A TEST DATA - ASTM E3053 / ASTM E2515

Client: FPI
Model: F1150
Run #: 3

Job #: 19-496
Tracking #: 0031
Technician: SJB
Date: 7/24/2019

	Particulate Sampling Data							Fuel Weight (lb)		Temperature Data (°F)			
Elapsed Time (min)	Gas Meter (ft^3)	Sample Rate (cfm)	Dilution Tunnel dP (in H_2O)	Orifice dH (in H_2O)	Meter Temp (°F)	Meter Vacuum (in Hg)	Pro. Rate (%)	Scale Reading	Weight Change	Dilution Tunnel	Flue	Filter	Ambient
66	9.588	0.151	0.082	2.34	94	-0.64	101	2.3	0	113	421	84	79
67	9.741	0.153	0.089	2.37	94	-0.19	98	2.2	-0.1	112	418	84	79
68	9.890	0.149	0.080	2.34	94	0	101	2.1	-0.1	113	414	84	79
69	10.046	0.156	0.085	2.35	94	-2.53	102	2.2	0.1	111	403	84	79
70	10.195	0.149	0.078	2.37	94	-0.06	102	2.1	-0.1	110	398	84	79
71	10.350	0.155	0.082	2.33	94	-0.99	103	2.1	0	110	391	84	79
72	10.499	0.149	0.082	2.34	95	-2.56	99	2.1	0	108	388	83	78
73	10.651	0.152	0.084	2.34	95	0	100	2.0	-0.1	108	379	83	78
74	10.804	0.153	0.075	2.35	95	-1.31	106	2.0	0	108	374	83	78
75	10.955	0.151	0.074	2.33	95	-0.11	105	1.9	-0.1	107	366	83	78
76	11.109	0.154	0.072	2.36	95	0	109	1.9	0	107	364	83	78
77	11.257	0.148	0.076	2.36	95	-2.47	102	1.9	0	106	359	83	78
78	11.412	0.155	0.081	2.34	96	-0.43	103	1.9	0	104	356	83	79
79	11.562	0.150	0.087	2.35	96	-2.45	96	1.9	0	105	351	83	78
80	11.717	0.155	0.076	2.34	96	-0.4	106	1.8	-0.1	105	347	83	79
81	11.865	0.148	0.083	2.36	96	-0.18	97	1.8	0	103	342	84	79
82	12.018	0.153	0.074	2.35	96	0	106	1.8	0	103	338	85	78
83	12.171	0.153	0.075	2.35	96	-1.18	106	1.7	-0.1	102	338	85	79
84	12.322	0.151	0.084	2.34	96	-0.94	98	1.7	0	103	334	85	78
85	12.476	0.154	0.082	2.34	96	-0.88	102	1.7	0	102	333	85	78
86	12.624	0.148	0.082	2.35	97	-2.61	97	1.7	0	102	331	85	78
87	12.779	0.155	0.070	2.33	97	0	110	1.7	0	101	332	85	78
88	12.929	0.150	0.084	2.33	97	0	97	1.6	-0.1	101	330	85	78
89	13.084	0.155	0.085	2.31	97	-2.09	100	1.6	0	102	327	85	78
90	13.233	0.149	0.073	2.34	97	-0.25	104	1.5	-0.1	101	323	85	78
91	13.385	0.152	0.080	2.35	97	0	101	1.6	0.1	100	322	85	79
92	13.537	0.152	0.080	2.34	97	0	101	1.6	0	100	318	85	78
93	13.689	0.152	0.086	2.33	97	-0.98	98	1.5	-0.1	100	315	85	78
94	13.843	0.154	0.076	2.34	97	-0.68	105	1.5	0	100	311	85	78
95	13.992	0.149	0.085	2.32	97	0	96	1.5	0	99	307	84	78
96	14.146	0.154	0.093	2.34	98	-1.72	95	1.5	0	100	303	84	78
97	14.296	0.150	0.081	2.33	98	-1.2	99	1.5	0	99	304	84	78
98	14.451	0.155	0.090	2.34	98	0	97	1.4	-0.1	98	301	84	78

BOX A TEST DATA - ASTM E3053 / ASTM E2515

Client: FPI
Model: F1150
Run #: 3

Job #: 19-496
Tracking #: 0031
Technician: SJB
Date: 7/24/2019

	Particulate Sampling Data							Fuel Weight (lb)		Temperature Data (°F)			
Elapsed Time (min)	Gas Meter (ft^3)	Sample Rate (cfm)	Dilution Tunnel dP (in H_2O)	Orifice dH (in H_2O)	Meter Temp (°F)	Meter Vacuum (in Hg)	Pro. Rate (%)	Scale Reading	Weight Change	Dilution Tunnel	Flue	Filter	Ambient
99	14.600	0.149	0.078	2.35	98	-1.95	100	1.4	0	97	297	84	77
100	14.754	0.154	0.078	2.33	98	-2.74	103	1.4	0	98	297	84	78
101	14.906	0.152	0.085	2.33	98	-2.07	98	1.4	0	97	295	84	78
102	15.058	0.152	0.085	2.32	98	-0.69	98	1.4	0	98	292	84	77
103	15.212	0.154	0.084	2.32	98	-2.67	99	1.3	-0.1	96	291	84	78
104	15.361	0.149	0.078	2.32	98	-1.84	100	1.3	0	96	289	84	78
105	15.515	0.154	0.083	2.33	98	0	100	1.3	0	95	287	84	77
106	15.665	0.150	0.086	2.34	98	0	96	1.3	0	96	287	84	78
107	15.820	0.155	0.070	2.31	99	-1.05	109	1.3	0	96	285	84	78
108	15.969	0.149	0.078	2.35	99	0	100	1.3	0	96	284	83	78
109	16.122	0.153	0.071	2.34	99	0	107	1.3	0	96	280	83	78
110	16.275	0.153	0.090	2.33	99	-2.43	95	1.3	0	95	279	83	78
111	16.427	0.152	0.088	2.34	99	-0.46	96	1.2	-0.1	95	277	83	78
112	16.581	0.154	0.081	2.35	99	-1.56	101	1.2	0	94	277	83	78
113	16.730	0.149	0.087	2.34	99	-2.2	94	1.2	0	95	277	83	78
114	16.885	0.155	0.080	2.34	99	-2.44	102	1.2	0	95	273	83	78
115	17.035	0.150	0.089	2.35	99	-1.59	94	1.2	0	95	272	83	78
116	17.190	0.155	0.084	2.34	99	0	100	1.2	0	94	271	83	78
117	17.340	0.150	0.078	2.32	99	-2.45	100	1.1	-0.1	95	270	83	77
118	17.492	0.152	0.081	2.33	99	-0.98	100	1.1	0	95	268	84	77
119	17.647	0.155	0.075	2.32	99	-2.46	106	1.1	0	94	269	85	78
120	17.798	0.151	0.073	2.33	99	-1.09	104	1.1	0	94	266	85	78
121	17.951	0.153	0.081	2.34	99	-1.03	100	1.1	0	94	265	86	77
122	18.100	0.149	0.091	2.34	99	-0.65	92	1.1	0	93	265	86	78
123	18.257	0.157	0.082	2.34	99	-0.14	102	1.1	0	94	263	86	78
124	18.407	0.150	0.088	2.33	99	-2.13	94	1.0	-0.1	93	262	85	78
125	18.561	0.154	0.085	2.35	100	-1.62	98	1.0	0	93	262	85	78
126	18.711	0.150	0.075	2.33	100	-2.23	102	1.0	0	93	261	85	78
127	18.865	0.154	0.078	2.34	100	-2.08	102	1.0	0	92	260	85	77
128	19.018	0.153	0.080	2.35	100	-2.61	101	1.0	0	93	260	85	78
129	19.169	0.151	0.083	2.34	100	-2.22	97	1.0	0	93	257	85	78
130	19.323	0.154	0.080	2.34	100	-2.07	101	1.0	0	93	257	85	78
131	19.473	0.150	0.085	2.34	100	0	96	0.9	-0.1	92	254	85	78

BOX A TEST DATA - ASTM E3053 / ASTM E2515

Client: FPI
Model: F1150
Run #: 3

Job #: 19-496
Tracking #: 0031
Technician: SJB
Date: 7/24/2019

	Particulate Sampling Data							Fuel Weight (lb)		Temperature Data (°F)			
Elapsed Time (min)	Gas Meter (ft^3)	Sample Rate (cfm)	Dilution Tunnel dP (in H_2O)	Orifice dH (in H_2O)	Meter Temp (°F)	Meter Vacuum (in Hg)	Pro. Rate (%)	Scale Reading	Weight Change	Dilution Tunnel	Flue	Filter	Ambient
132	19.629	0.156	0.080	2.34	100	0	102	0.9	0	92	255	84	78
133	19.778	0.149	0.080	2.35	100	-0.86	98	0.9	0	92	253	84	78
134	19.932	0.154	0.072	2.34	100	0	107	0.9	0	92	251	84	78
135	20.083	0.151	0.075	2.33	100	-1.47	102	0.9	0	91	253	84	77
136	20.236	0.153	0.087	2.32	100	-2.61	96	0.9	0	92	253	84	77
137	20.391	0.155	0.087	2.34	100	0	98	0.9	0	91	250	84	78
138	20.540	0.149	0.085	2.33	100	-0.04	95	0.9	0	92	248	84	78
139	20.695	0.155	0.080	2.34	100	-2.49	102	0.8	-0.1	91	247	84	77
140	20.846	0.151	0.084	2.35	100	-2.31	97	0.8	0	91	245	84	78
141	21.001	0.155	0.074	2.34	100	-2.24	106	0.7	-0.1	91	244	84	77
142	21.150	0.149	0.081	2.33	100	0	97	0.8	0.1	91	245	84	77
143	21.303	0.153	0.077	2.32	100	0	102	0.8	0	90	244	84	78
144	21.457	0.154	0.076	2.31	100	-2.62	104	0.8	0	90	243	83	77
145	21.609	0.152	0.075	2.33	100	-1.05	103	0.8	0	90	243	83	78
146	21.762	0.153	0.081	2.35	100	-0.96	100	0.9	0.1	90	241	83	77
147	21.912	0.150	0.079	2.33	100	-2.53	99	0.8	-0.1	91	240	83	77
148	22.068	0.156	0.091	2.33	100	-2.57	96	0.7	-0.1	91	238	84	77
149	22.218	0.150	0.087	2.32	100	-2.6	94	0.7	0	91	239	85	78
150	22.372	0.154	0.093	2.35	100	0	94	0.7	0	91	240	86	77
151	22.523	0.151	0.085	2.35	100	-2.6	96	0.7	0	91	238	86	78
152	22.677	0.154	0.080	2.33	101	-2.46	101	0.7	0	91	239	86	77
153	22.830	0.153	0.080	2.33	101	-0.42	100	0.7	0	91	237	86	78
154	22.980	0.150	0.076	2.34	101	0	101	0.7	0	91	236	86	78
155	23.135	0.155	0.079	2.35	101	0	102	0.7	0	91	235	85	78
156	23.285	0.150	0.081	2.35	101	-2.63	98	0.7	0	90	235	85	78
157	23.441	0.156	0.075	2.34	101	-1.11	106	0.6	-0.1	91	233	85	78
158	23.591	0.150	0.091	2.33	101	0	92	0.6	0	90	231	85	78
159	23.744	0.153	0.084	2.34	101	-2.61	98	0.6	0	91	229	85	78
160	23.896	0.152	0.075	2.34	101	-0.64	103	0.6	0	90	229	85	78
161	24.049	0.153	0.084	2.34	101	-0.55	98	0.6	0	90	229	85	78
162	24.203	0.154	0.079	2.34	101	0	101	0.6	0	90	228	85	77
163	24.353	0.150	0.087	2.32	101	-0.27	94	0.6	0	90	227	84	77
164	24.508	0.155	0.071	2.33	101	-2.6	108	0.6	0	90	227	84	78

BOX A TEST DATA - ASTM E3053 / ASTM E2515

Client: FPI
Model: F1150
Run #: 3

Job #: 19-496
Tracking #: 0031
Technician: SJB
Date: 7/24/2019

	Particulate Sampling Data							Fuel Weight (lb)		Temperature Data (°F)			
Elapsed Time (min)	Gas Meter (ft^3)	Sample Rate (cfm)	Dilution Tunnel dP (in H_2O)	Orifice dH (in H_2O)	Meter Temp (°F)	Meter Vacuum (in Hg)	Pro. Rate (%)	Scale Reading	Weight Change	Dilution Tunnel	Flue	Filter	Ambient
165	24.658	0.150	0.081	2.33	101	-1.76	98	0.6	0	89	226	84	77
166	24.814	0.156	0.081	2.34	101	-1.54	101	0.6	0	89	226	84	77
167	24.964	0.150	0.076	2.36	101	-2.44	101	0.5	-0.1	89	227	84	78
168	25.117	0.153	0.078	2.33	101	-2.4	101	0.5	0	89	224	84	78
169	25.271	0.154	0.085	2.34	101	0	98	0.5	0	89	224	84	77
170	25.422	0.151	0.082	2.33	101	-2.43	98	0.4	-0.1	89	223	84	78
171	25.577	0.155	0.083	2.34	101	-2.59	100	0.5	0.1	89	223	84	77
172	25.726	0.149	0.075	2.34	101	-1.72	101	0.5	0	89	222	84	78
173	25.882	0.156	0.082	2.34	101	0	101	0.4	-0.1	89	221	84	78
174	26.033	0.151	0.086	2.34	101	0	95	0.5	0.1	88	219	84	78
175	26.186	0.153	0.082	2.35	101	-2.53	99	0.5	0	89	220	83	78
176	26.338	0.152	0.083	2.33	101	-2.49	98	0.5	0	89	219	83	78
177	26.491	0.153	0.096	2.33	101	-1.85	91	0.5	0	89	218	83	78
178	26.646	0.155	0.085	2.34	101	0	98	0.4	-0.1	89	218	83	78
179	26.795	0.149	0.081	2.34	101	-0.04	97	0.4	0	89	218	83	78
180	26.951	0.156	0.076	2.34	101	-1.41	105	0.4	0	88	217	83	78
181	27.102	0.151	0.079	2.33	101	-0.68	99	0.4	0	89	217	83	78
182	27.257	0.155	0.079	2.33	101	-1.42	102	0.4	0	88	217	83	78
183	27.407	0.150	0.083	2.35	101	-1.88	96	0.4	0	88	216	83	77
184	27.560	0.153	0.079	2.33	101	-2	101	0.4	0	89	215	83	77
185	27.714	0.154	0.080	2.33	101	-2.26	101	0.4	0	89	215	83	78
186	27.866	0.152	0.083	2.33	101	0	98	0.3	-0.1	89	214	83	78
187	28.020	0.154	0.082	2.34	102	-2.61	99	0.3	0	89	213	83	78
188	28.170	0.150	0.084	2.34	102	-1.56	95	0.4	0.1	88	213	84	78
189	28.326	0.156	0.076	2.34	102	-0.65	104	0.3	-0.1	88	211	85	78
190	28.476	0.150	0.083	2.34	102	-1.49	96	0.3	0	88	213	85	78
191	28.630	0.154	0.081	2.34	102	-1.18	100	0.2	-0.1	89	211	86	78
192	28.782	0.152	0.075	2.33	102	0	102	0.3	0.1	89	212	86	78
193	28.935	0.153	0.079	2.34	102	-0.15	100	0.3	0	88	211	86	77
194	29.090	0.155	0.072	2.34	102	-2.46	107	0.3	0	88	212	86	77
195	29.239	0.149	0.077	2.33	102	0	99	0.3	0	88	211	85	77
196	29.395	0.156	0.080	2.33	102	0	102	0.3	0	88	211	85	77
197	29.545	0.150	0.085	2.32	102	-1.94	95	0.3	0	88	209	85	77

BOX A TEST DATA - ASTM E3053 / ASTM E2515

Client: FPI
Model: F1150
Run #: 3

Job #: 19-496
Tracking #: 0031
Technician: SJB
Date: 7/24/2019

	Particulate Sampling Data							Fuel Weight (lb)		Temperature Data (°F)			
Elapsed Time (min)	Gas Meter (ft^3)	Sample Rate (cfm)	Dilution Tunnel dP (in H_2O)	Orifice dH (in H_2O)	Meter Temp (°F)	Meter Vacuum (in Hg)	Pro. Rate (%)	Scale Reading	Weight Change	Dilution Tunnel	Flue	Filter	Ambient
198	29.700	0.155	0.081	2.35	102	-2.44	100	0.3	0	88	209	85	77
199	29.851	0.151	0.082	2.35	102	-2.54	97	0.2	-0.1	88	209	85	78
200	30.004	0.153	0.076	2.33	102	-2.6	102	0.2	0	88	209	85	77
201	30.158	0.154	0.080	2.33	102	0	100	0.2	0	88	207	85	77
202	30.309	0.151	0.076	2.34	102	-2.2	101	0.2	0	88	205	85	78
203	30.464	0.155	0.079	2.34	102	0	102	0.2	0	88	205	85	78
204	30.614	0.150	0.075	2.34	102	-2.6	101	0.2	0	88	205	84	77
205	30.770	0.156	0.082	2.34	102	-1.57	101	0.2	0	88	205	84	77
206	30.920	0.150	0.081	2.34	102	-0.61	97	0.1	-0.1	87	204	84	77
207	31.074	0.154	0.084	2.33	102	-2.52	98	0.2	0.1	87	203	84	77
208	31.227	0.153	0.077	2.35	102	-2.67	102	0.1	-0.1	87	203	84	77
209	31.379	0.152	0.075	2.34	102	0	102	0.1	0	88	202	84	78
210	31.533	0.154	0.070	2.35	102	-0.41	107	0.1	0	88	201	84	78
211	31.683	0.150	0.092	2.32	102	-0.39	91	0.1	0	87	200	84	78
212	31.839	0.156	0.085	2.33	102	-1.47	99	0.1	0	88	199	84	78
213	31.990	0.151	0.077	2.35	102	-0.99	100	0.1	0	87	199	84	78
214	32.144	0.154	0.088	2.36	102	-2.51	96	0.1	0	87	201	84	78
215	32.295	0.151	0.083	2.34	102	-2.05	97	0.1	0	87	200	84	78
216	32.453	0.158	0.073	2.34	102	0	108	0.1	0	87	200	84	77
217	32.608	0.155	0.076	2.35	102	-1.65	104	0.1	0	87	199	84	77
218	32.758	0.150	0.076	2.34	102	-0.99	100	0.1	0	87	198	84	77
219	32.913	0.155	0.093	2.33	102	-2.09	94	0.1	0	87	198	84	77
220	33.064	0.151	0.079	2.33	102	-2.62	99	0.1	0	87	198	84	78
221	33.220	0.156	0.076	2.33	102	0	104	0.1	0	87	198	84	78
222	33.370	0.150	0.084	2.35	102	0	95	0.1	0	87	196	84	78
223	33.523	0.153	0.075	2.33	102	0	103	0.0	-0.1	87	195	83	78
Avg/Tot	33.523	0.150	0.081	2.29	95	-1.18	100			102	327	84	77.8

BOX B TEST DATA - ASTM E3053 / ASTM E2515

Client: FPI
Model: F1150
Run #: 3

Job #: 19-496
Tracking #: 0031
Technician: SJB
Date: 7/24/2019

	Particulate Sampling Data							Flue Gas Data		
Elapsed Time (min)	Gas Meter (ft^3)	Sample Rate (cfm)	Orifice dH (in H_2O)	Meter Temp (°F)	Meter Vacuum (in Hg)	Pro. Rate (%)	Filter (°F)	Flue Draft (in H_2O)	CO_2 (%)	CO (%)
0	0.000		0.00	76	-1		86	0.000	5.14	0.30
1	0.110	0.110	2.16	76	-0.55	78	85	-0.070	2.03	0.21
2	0.256	0.146	2.15	76	-2.23	105	84	-0.090	6.55	0.38
3	0.396	0.140	2.15	76	-2.19	100	84	-0.090	10.32	0.17
4	0.539	0.143	2.13	76	-1.41	103	85	-0.080	11.29	0.23
5	0.683	0.144	2.27	76	-3.07	104	86	-0.100	11.56	0.23
6	0.828	0.145	2.26	76	-2.37	105	86	-0.090	11.86	0.19
7	0.973	0.145	2.24	77	-1.23	105	85	-0.090	12.15	0.17
8	1.116	0.143	2.22	77	-2.83	105	84	-0.090	11.14	0.27
9	1.261	0.145	2.23	77	-1.91	103	84	-0.080	9.90	0.06
10	1.405	0.144	2.22	77	-3.14	105	85	-0.090	9.36	0.07
11	1.552	0.147	2.23	77	-2.54	113	86	-0.070	9.51	0.06
12	1.694	0.142	2.24	77	-0.58	102	86	-0.090	9.59	0.08
13	1.841	0.147	2.22	78	-1.91	106	85	-0.080	9.34	0.09
14	1.984	0.143	2.23	78	-3.09	97	84	-0.100	9.59	0.10
15	2.130	0.146	2.22	78	-2.98	108	84	-0.080	9.93	0.06
16	2.272	0.142	2.21	79	-1.89	100	85	-0.080	10.02	0.09
17	2.419	0.147	2.21	79	-1.18	105	86	-0.070	10.19	0.14
18	2.561	0.142	2.22	79	-0.51	103	86	-0.080	10.21	0.19
19	2.707	0.146	2.20	80	-3.1	105	85	-0.080	10.14	0.16
20	2.849	0.142	2.21	80	-2.28	100	85	-0.090	10.53	0.18
21	2.996	0.147	2.21	80	-2.13	100	84	-0.080	10.72	0.25
22	3.138	0.142	2.19	81	-1.97	103	84	-0.080	10.69	0.28
23	3.284	0.146	2.20	81	-0.81	111	85	-0.080	10.74	0.46
24	3.428	0.144	2.19	81	-2.59	106	86	-0.070	10.82	0.51
25	3.572	0.144	2.20	82	-2.45	100	86	-0.090	11.21	0.59
26	3.715	0.143	2.18	82	-3.21	102	85	-0.080	11.21	0.69
27	3.859	0.144	2.18	82	-0.67	100	85	-0.090	11.19	0.69
28	4.003	0.144	2.16	83	-0.75	105	85	-0.090	10.97	0.64
29	4.146	0.143	2.17	83	-2.92	102	84	-0.070	10.89	0.64
30	4.291	0.145	2.16	83	-2.58	104	84	-0.080	10.79	0.74
31	4.433	0.142	2.16	84	-2.37	100	85	-0.070	11.06	0.83

BOX B TEST DATA - ASTM E3053 / ASTM E2515

Client: FPI
Model: F1150
Run #: 3

Job #: 19-496
Tracking #: 0031
Technician: SJB
Date: 7/24/2019

	Particulate Sampling Data							Flue Gas Data		
Elapsed Time (min)	Gas Meter (ft^3)	Sample Rate (cfm)	Orifice dH (in H_2O)	Meter Temp (°F)	Meter Vacuum (in Hg)	Pro. Rate (%)	Filter (°F)	Flue Draft (in H_2O)	CO_2 (%)	CO (%)
32	4.579	0.146	2.17	84	-3	101	86	-0.090	10.86	0.94
33	4.721	0.142	2.16	84	-1.63	106	86	-0.080	11.31	1.01
34	4.867	0.146	2.16	84	-3.05	106	86	-0.090	11.25	1.15
35	5.008	0.141	2.15	85	-1.65	100	85	-0.070	11.45	1.22
36	5.153	0.145	2.15	85	-2.57	105	85	-0.080	11.47	1.26
37	5.294	0.141	2.14	85	-3.03	95	84	-0.080	11.12	1.09
38	5.440	0.146	2.15	86	-2.11	99	84	-0.100	11.27	1.06
39	5.581	0.141	2.14	86	-2.44	101	85	-0.090	11.27	0.97
40	5.727	0.146	2.15	86	-2.43	109	86	-0.080	11.07	1.08
41	5.868	0.141	2.14	87	-0.64	103	86	-0.080	10.96	0.98
42	6.012	0.144	2.13	87	-1.86	102	86	-0.080	10.98	0.98
43	6.155	0.143	2.13	87	-3.2	105	85	-0.090	10.85	0.92
44	6.296	0.141	2.13	88	-3.18	99	85	-0.080	10.71	0.76
45	6.441	0.145	2.13	88	-3.19	102	84	-0.090	10.70	0.78
46	6.582	0.141	2.12	88	-0.71	96	84	-0.080	10.52	0.81
47	6.728	0.146	2.13	88	-2.6	107	85	-0.100	10.84	0.76
48	6.869	0.141	2.11	89	-2.78	99	86	-0.080	10.65	0.72
49	7.014	0.145	2.11	89	-3.03	103	86	-0.080	10.93	0.68
50	7.154	0.140	2.11	89	-0.71	97	86	-0.090	10.68	0.62
51	7.299	0.145	2.12	89	-2.99	103	85	-0.080	10.54	0.53
52	7.440	0.141	2.10	90	-2.11	98	85	-0.080	10.31	0.34
53	7.585	0.145	2.12	90	-0.97	97	84	-0.080	10.28	0.25
54	7.728	0.143	2.11	90	-0.71	93	84	-0.080	10.52	0.34
55	7.871	0.143	2.10	90	-1.5	101	85	-0.080	10.27	0.20
56	8.014	0.143	2.11	90	-2.43	101	86	-0.080	9.79	0.19
57	8.156	0.142	2.10	91	-0.74	103	86	-0.080	9.84	0.17
58	8.300	0.144	2.11	91	-1.11	99	86	-0.070	9.57	0.08
59	8.441	0.141	2.09	91	-1.54	99	85	-0.070	9.37	0.09
60	8.587	0.146	2.12	91	-1.01	101	85	-0.080	9.18	0.05
61	8.729	0.142	2.09	92	-0.74	94	84	-0.080	8.97	0.09
62	8.876	0.147	2.19	92	-0.73	103	85	-0.080	8.61	0.08
63	9.020	0.144	2.18	92	-0.93	102	85	-0.070	8.40	0.04

BOX B TEST DATA - ASTM E3053 / ASTM E2515

Client: FPI
Model: F1150
Run #: 3

Job #: 19-496
Tracking #: 0031
Technician: SJB
Date: 7/24/2019

	Particulate Sampling Data							Flue Gas Data		
Elapsed Time (min)	Gas Meter (ft^3)	Sample Rate (cfm)	Orifice dH (in H_2O)	Meter Temp (°F)	Meter Vacuum (in Hg)	Pro. Rate (%)	Filter (°F)	Flue Draft (in H_2O)	CO_2 (%)	CO (%)
64	9.168	0.148	2.18	92	-0.74	105	86	-0.080	7.86	0.07
65	9.311	0.143	2.18	92	-0.83	96	86	-0.060	7.90	0.05
66	9.459	0.148	2.18	93	-1.55	102	86	-0.070	7.59	0.07
67	9.603	0.144	2.19	93	-0.8	95	85	-0.080	7.78	0.07
68	9.751	0.148	2.18	93	-0.78	103	85	-0.080	7.61	0.11
69	9.894	0.143	2.18	93	-3.13	97	84	-0.060	7.49	0.11
70	10.043	0.149	2.18	93	-2.82	105	84	-0.080	6.95	0.10
71	10.187	0.144	2.17	93	-1.22	99	85	-0.070	6.81	0.11
72	10.335	0.148	2.19	93	-0.78	101	86	-0.070	6.77	0.17
73	10.479	0.144	2.18	94	-2.45	97	86	-0.070	6.34	0.19
74	10.627	0.148	2.17	94	-2.73	106	86	-0.060	6.02	0.21
75	10.770	0.143	2.17	94	-0.92	103	85	-0.060	5.90	0.20
76	10.919	0.149	2.17	94	-0.89	109	85	-0.070	5.80	0.20
77	11.062	0.143	2.18	94	-1.55	101	84	-0.060	5.54	0.27
78	11.211	0.149	2.17	94	-3.05	102	84	-0.060	5.63	0.25
79	11.355	0.144	2.19	94	-0.79	95	84	-0.060	5.80	0.31
80	11.503	0.148	2.18	95	-3.2	105	85	-0.060	5.77	0.30
81	11.647	0.144	2.18	95	-2.18	97	86	-0.060	5.66	0.33
82	11.796	0.149	2.18	95	-0.77	107	86	-0.060	5.66	0.33
83	11.940	0.144	2.19	95	-0.81	102	85	-0.060	5.53	0.32
84	12.089	0.149	2.19	95	-2.2	100	85	-0.060	5.65	0.35
85	12.233	0.144	2.19	95	-0.75	98	84	-0.060	5.53	0.42
86	12.381	0.148	2.19	95	-2.8	101	84	-0.080	5.71	0.40
87	12.526	0.145	2.18	95	-1.92	107	85	-0.060	5.70	0.36
88	12.674	0.148	2.19	95	-3.28	99	86	-0.050	5.52	0.37
89	12.819	0.145	2.18	96	-3.02	97	86	-0.050	5.58	0.40
90	12.967	0.148	2.18	96	-1.42	106	85	-0.050	5.28	0.49
91	13.112	0.145	2.18	96	-2.06	99	84	-0.060	5.20	0.53
92	13.260	0.148	2.18	96	-2.13	101	84	-0.060	5.19	0.54
93	13.405	0.145	2.19	96	-2.21	96	84	-0.060	4.85	0.45
94	13.553	0.148	2.18	96	-3.18	104	85	-0.060	4.49	0.50
95	13.698	0.145	2.19	96	-0.9	96	86	-0.050	4.64	0.48

BOX B TEST DATA - ASTM E3053 / ASTM E2515

Client: FPI
Model: F1150
Run #: 3

Job #: 19-496
Tracking #: 0031
Technician: SJB
Date: 7/24/2019

	Particulate Sampling Data							Flue Gas Data		
Elapsed Time (min)	Gas Meter (ft^3)	Sample Rate (cfm)	Orifice dH (in H_2O)	Meter Temp (°F)	Meter Vacuum (in Hg)	Pro. Rate (%)	Filter (°F)	Flue Draft (in H_2O)	CO_2 (%)	CO (%)
96	13.846	0.148	2.19	96	-1.26	94	86	-0.050	4.68	0.57
97	13.991	0.145	2.19	96	-2.18	99	86	-0.050	4.40	0.62
98	14.139	0.148	2.18	96	-3.24	95	85	-0.050	4.52	0.62
99	14.284	0.145	2.18	96	-0.8	100	84	-0.060	4.65	0.52
100	14.432	0.148	2.19	96	-2.91	103	84	-0.040	4.57	0.53
101	14.577	0.145	2.19	96	-0.76	96	84	-0.070	4.53	0.56
102	14.725	0.148	2.19	97	-1.04	98	85	-0.050	4.55	0.60
103	14.870	0.145	2.19	97	-0.76	96	86	-0.050	4.49	0.60
104	15.019	0.149	2.19	97	-2.38	103	86	-0.060	4.46	0.60
105	15.163	0.144	2.19	97	-3.22	96	85	-0.050	4.47	0.62
106	15.312	0.149	2.19	97	-0.74	98	84	-0.050	4.30	0.59
107	15.457	0.145	2.19	97	-0.84	106	84	-0.040	4.21	0.56
108	15.605	0.148	2.19	97	-1.51	102	84	-0.040	4.19	0.59
109	15.750	0.145	2.19	97	-0.98	105	84	-0.050	4.39	0.58
110	15.898	0.148	2.19	97	-0.83	95	86	-0.050	4.19	0.53
111	16.043	0.145	2.19	97	-1.74	94	86	-0.050	4.03	0.50
112	16.192	0.149	2.19	97	-0.75	101	85	-0.050	4.07	0.52
113	16.337	0.145	2.18	97	-0.8	95	84	-0.050	4.13	0.52
114	16.485	0.148	2.19	97	-1.7	101	84	-0.050	4.08	0.53
115	16.630	0.145	2.19	97	-0.88	94	84	-0.040	4.01	0.54
116	16.779	0.149	2.19	97	-1.68	99	84	-0.050	4.04	0.51
117	16.924	0.145	2.18	97	-0.75	100	86	-0.040	4.12	0.51
118	17.072	0.148	2.19	97	-1.31	100	86	-0.060	3.97	0.48
119	17.217	0.145	2.18	97	-0.8	102	85	-0.050	4.08	0.49
120	17.366	0.149	2.19	98	-2.03	106	84	-0.050	3.85	0.49
121	17.511	0.145	2.18	98	-1.64	98	84	-0.050	3.89	0.48
122	17.660	0.149	2.18	98	-2.21	95	84	-0.050	3.96	0.48
123	17.804	0.144	2.20	98	-3.16	97	85	-0.050	4.02	0.48
124	17.953	0.149	2.18	98	-2.73	96	86	-0.040	3.92	0.45
125	18.098	0.145	2.18	98	-3.01	95	86	-0.050	4.04	0.45
126	18.247	0.149	2.17	98	-1.13	104	85	-0.050	3.83	0.47
127	18.392	0.145	2.18	98	-2.77	100	84	-0.050	3.92	0.45

BOX B TEST DATA - ASTM E3053 / ASTM E2515

Client: FPI
Model: F1150
Run #: 3

Job #: 19-496
Tracking #: 0031
Technician: SJB
Date: 7/24/2019

	Particulate Sampling Data							Flue Gas Data		
Elapsed Time (min)	Gas Meter (ft^3)	Sample Rate (cfm)	Orifice dH (in H_2O)	Meter Temp (°F)	Meter Vacuum (in Hg)	Pro. Rate (%)	Filter (°F)	Flue Draft (in H_2O)	CO_2 (%)	CO (%)
128	18.541	0.149	2.18	98	-0.81	101	84	-0.040	3.74	0.45
129	18.685	0.144	2.18	98	-2.24	96	84	-0.040	3.70	0.43
130	18.834	0.149	2.19	98	-0.73	101	85	-0.040	3.77	0.46
131	18.979	0.145	2.18	98	-1.24	95	86	-0.050	3.68	0.46
132	19.128	0.149	2.17	98	-2.46	101	86	-0.050	3.90	0.42
133	19.273	0.145	2.18	98	-3.26	98	85	-0.050	3.77	0.44
134	19.422	0.149	2.18	98	-0.76	107	84	-0.040	3.72	0.45
135	19.567	0.145	2.17	98	-2.85	101	83	-0.040	3.81	0.42
136	19.716	0.149	2.18	98	-2.06	97	84	-0.040	3.65	0.44
137	19.860	0.144	2.19	98	-2.72	94	85	-0.050	3.68	0.43
138	20.010	0.150	2.18	98	-1.15	99	86	-0.050	3.61	0.37
139	20.154	0.144	2.18	98	-1.98	98	86	-0.040	3.51	0.36
140	20.304	0.150	2.18	98	-1.87	99	85	-0.050	3.42	0.36
141	20.448	0.144	2.17	98	-1.27	101	84	-0.050	3.39	0.35
142	20.598	0.150	2.18	98	-1.72	101	84	-0.050	3.50	0.35
143	20.742	0.144	2.18	98	-2.12	99	85	-0.040	3.41	0.35
144	20.892	0.150	2.18	98	-2.49	104	86	-0.040	3.38	0.34
145	21.037	0.145	2.18	98	-0.92	101	86	-0.050	3.55	0.30
146	21.186	0.149	2.18	98	-3.29	100	84	-0.050	3.33	0.33
147	21.330	0.144	2.18	98	-0.77	98	84	-0.040	3.33	0.31
148	21.480	0.150	2.19	98	-2.88	95	84	-0.040	3.24	0.33
149	21.624	0.144	2.17	98	-0.84	94	85	-0.030	3.28	0.32
150	21.774	0.150	2.19	98	-0.83	94	86	-0.050	3.39	0.31
151	21.918	0.144	2.17	99	-0.87	94	86	-0.040	3.17	0.29
152	22.068	0.150	2.18	99	-2.52	101	85	-0.040	3.35	0.28
153	22.212	0.144	2.18	99	-1.86	97	84	-0.040	3.11	0.30
154	22.362	0.150	2.19	99	-1.38	104	84	-0.050	3.22	0.30
155	22.506	0.144	2.19	99	-2.77	98	85	-0.050	3.14	0.34
156	22.656	0.150	2.19	99	-3.25	101	86	-0.050	3.18	0.30
157	22.800	0.144	2.19	99	-2.34	101	86	-0.040	2.97	0.33
158	22.949	0.149	2.19	99	-1.39	94	85	-0.060	2.94	0.32
159	23.094	0.145	2.18	99	-1.84	96	84	-0.030	2.99	0.29

BOX B TEST DATA - ASTM E3053 / ASTM E2515

Client: FPI
Model: F1150
Run #: 3

Job #: 19-496
Tracking #: 0031
Technician: SJB
Date: 7/24/2019

	Particulate Sampling Data							Flue Gas Data		
Elapsed Time (min)	Gas Meter (ft^3)	Sample Rate (cfm)	Orifice dH (in H_2O)	Meter Temp (°F)	Meter Vacuum (in Hg)	Pro. Rate (%)	Filter (°F)	Flue Draft (in H_2O)	CO_2 (%)	CO (%)
160	23.243	0.149	2.19	99	-0.8	104	84	-0.050	2.98	0.30
161	23.388	0.145	2.19	99	-1.04	96	84	-0.040	2.92	0.26
162	23.537	0.149	2.18	99	-2.98	101	86	-0.040	2.93	0.27
163	23.682	0.145	2.18	99	-1.82	94	86	-0.040	3.02	0.26
164	23.831	0.149	2.18	99	-2.9	107	85	-0.060	2.90	0.29
165	23.976	0.145	2.18	99	-3.11	97	84	-0.040	2.73	0.30
166	24.125	0.149	2.18	99	-0.86	100	84	-0.030	2.85	0.30
167	24.270	0.145	2.18	99	-3.17	100	84	-0.050	2.95	0.26
168	24.419	0.149	2.17	99	-2.22	102	86	-0.030	2.81	0.31
169	24.564	0.145	2.16	99	-2.11	95	86	-0.040	3.04	0.30
170	24.714	0.150	2.16	99	-2.57	100	85	-0.050	2.87	0.33
171	24.858	0.144	2.19	99	-2.25	95	84	-0.040	2.83	0.32
172	25.008	0.150	2.19	99	-2.72	105	84	-0.040	2.82	0.31
173	25.152	0.144	2.19	99	-0.74	96	84	-0.050	2.91	0.29
174	25.301	0.149	2.18	99	-1.79	97	86	-0.050	2.70	0.32
175	25.446	0.145	2.18	99	-0.76	97	86	-0.050	2.87	0.31
176	25.595	0.149	2.18	99	-1.42	99	85	-0.040	2.82	0.29
177	25.740	0.145	2.18	99	-3.21	89	84	-0.040	2.71	0.31
178	25.889	0.149	2.18	99	-2.48	98	84	-0.040	2.85	0.30
179	26.034	0.145	2.19	99	-2.22	97	85	-0.040	2.79	0.29
180	26.183	0.149	2.18	100	-3.26	103	86	-0.050	2.75	0.30
181	26.328	0.145	2.18	99	-1.77	99	86	-0.050	2.79	0.29
182	26.477	0.149	2.18	100	-2.95	101	85	-0.030	2.72	0.31
183	26.622	0.145	2.18	100	-1.49	96	84	-0.030	2.68	0.31
184	26.771	0.149	2.18	100	-0.98	101	84	-0.040	2.67	0.31
185	26.916	0.145	2.17	100	-2.24	98	85	-0.040	2.74	0.33
186	27.065	0.149	2.17	100	-1.1	99	86	-0.030	2.65	0.30
187	27.210	0.145	2.17	100	-0.84	97	86	-0.040	2.78	0.29
188	27.359	0.149	2.18	100	-2.98	98	85	-0.020	2.70	0.29
189	27.504	0.145	2.17	100	-1.61	100	84	-0.040	2.63	0.30
190	27.653	0.149	2.18	100	-2.76	98	84	-0.040	2.80	0.26
191	27.799	0.146	2.17	100	-1.44	98	84	-0.040	2.68	0.32

BOX B TEST DATA - ASTM E3053 / ASTM E2515

Client: FPI
Model: F1150
Run #: 3

Job #: 19-496
Tracking #: 0031
Technician: SJB
Date: 7/24/2019

	Particulate Sampling Data							Flue Gas Data		
Elapsed Time (min)	Gas Meter (ft^3)	Sample Rate (cfm)	Orifice dH (in H_2O)	Meter Temp (°F)	Meter Vacuum (in Hg)	Pro. Rate (%)	Filter (°F)	Flue Draft (in H_2O)	CO_2 (%)	CO (%)
192	27.947	0.148	2.19	100	-2.84	103	86	-0.040	2.74	0.27
193	28.093	0.146	2.18	100	-0.88	99	86	-0.020	2.73	0.29
194	28.241	0.148	2.18	100	-2.02	105	85	-0.040	2.79	0.28
195	28.387	0.146	2.18	100	-0.92	100	84	-0.050	2.52	0.28
196	28.535	0.148	2.17	100	-1.01	100	84	-0.040	2.55	0.30
197	28.681	0.146	2.18	100	-0.82	95	84	-0.030	2.71	0.27
198	28.829	0.148	2.19	100	-0.7	99	86	-0.040	2.54	0.30
199	28.975	0.146	2.18	100	-1.8	97	86	-0.040	2.60	0.29
200	29.124	0.149	2.18	100	-2.62	103	85	-0.040	2.63	0.30
201	29.270	0.146	2.17	100	-1.03	98	84	-0.040	2.64	0.28
202	29.418	0.148	2.17	100	-2.71	102	84	-0.040	2.53	0.30
203	29.564	0.146	2.17	100	-2.63	99	84	-0.030	2.60	0.28
204	29.712	0.148	2.18	100	-0.84	103	86	-0.040	2.60	0.30
205	29.859	0.147	2.17	100	-2.33	98	86	-0.050	2.51	0.31
206	30.007	0.148	2.18	100	-0.91	99	85	-0.040	2.65	0.26
207	30.153	0.146	2.17	100	-1.02	96	84	-0.030	2.64	0.26
208	30.301	0.148	2.17	100	-1.69	101	83	-0.040	2.64	0.26
209	30.448	0.147	2.17	100	-0.95	102	84	-0.040	2.53	0.29
210	30.595	0.147	2.18	100	-0.75	106	86	-0.030	2.58	0.28
211	30.743	0.148	2.18	100	-3.03	93	86	-0.040	2.60	0.26
212	30.890	0.147	2.18	100	-3.23	96	85	-0.030	2.58	0.24
213	31.037	0.147	2.18	100	-0.83	101	84	-0.050	2.50	0.27
214	31.184	0.147	2.17	100	-0.77	94	84	-0.020	2.49	0.31
215	31.332	0.148	2.18	100	-0.91	98	84	-0.040	2.39	0.30
216	31.479	0.147	2.17	100	-3.06	104	85	-0.040	2.42	0.30
217	31.626	0.147	2.18	100	-0.75	101	86	-0.040	2.52	0.28
218	31.773	0.147	2.16	100	-3.17	101	85	-0.040	2.41	0.30
219	31.921	0.148	2.16	100	-3.21	92	84	-0.030	2.45	0.25
220	32.068	0.147	2.18	100	-2.12	100	84	-0.040	2.55	0.24
221	32.216	0.148	2.19	100	-2.12	102	84	-0.040	2.42	0.27
222	32.362	0.146	2.18	100	-1.18	96	85	-0.030	2.43	0.28
223	32.510	0.148	2.18	100	-0.82	103	86	-0.040	2.30	0.30

BOX B TEST DATA - ASTM E3053 / ASTM E2515

Client: FPI
Model: F1150
Run #: 3

Job #: 19-496
Tracking #: 0031
Technician: SJB
Date: 7/24/2019

	Particulate Sampling Data							Flue Gas Data		
Elapsed Time (min)	Gas Meter (ft^3)	Sample Rate (cfm)	Orifice dH (in H_2O)	Meter Temp (°F)	Meter Vacuum (in Hg)	Pro. Rate (%)	Filter (°F)	Flue Draft (in H_2O)	CO_2 (%)	CO (%)
Avg/Tot	32.510	0.146	2.17	94	-1.85	100	85	-0.057	5.65	0.38

WOODSTOVE SURFACE TEMPERATURE DATA

Client: FPI
Model: F1150
Run #: 3

Job #: 19-496
Tracking #: 0031
Technician: SJB
Date: 7/24/2019

	Temperature Data (°F)						
Elapsed Time (min)	FB Left	FB Right	FB Back	FB Top	FB Bottom	Stove Surface Average	Catalyst Exit
0	534	491	374	486	188	414.6	N/A
1	533	493	393	456	193	413.6	N/A
2	530	489	403	458	193	414.6	N/A
3	524	481	410	489	195	419.8	N/A
4	518	473	417	523	196	425.4	N/A
5	511	468	423	558	199	431.8	N/A
6	505	462	430	584	201	436.4	N/A
7	500	457	436	600	204	439.4	N/A
8	495	454	443	596	208	439.2	N/A
9	492	450	448	599	211	440.0	N/A
10	489	449	453	583	214	437.6	N/A
11	487	448	456	593	217	440.2	N/A
12	485	445	458	578	218	436.8	N/A
13	482	443	460	579	220	436.8	N/A
14	480	441	462	576	222	436.2	N/A
15	478	438	463	574	223	435.2	N/A
16	476	438	426	599	224	432.6	N/A
17	475	437	411	602	225	430.0	N/A
18	473	435	400	603	224	427.0	N/A
19	473	435	393	602	225	425.6	N/A
20	471	434	387	602	225	423.8	N/A
21	470	434	383	602	224	422.6	N/A
22	469	435	380	607	224	423.0	N/A
23	469	434	378	607	223	422.2	N/A
24	469	435	377	615	223	423.8	N/A
25	468	437	375	612	223	423.0	N/A
26	469	435	374	627	222	425.4	N/A
27	468	440	373	625	221	425.4	N/A
28	469	439	373	627	221	425.8	N/A
29	470	440	373	629	220	426.4	N/A
30	471	442	372	621	219	425.0	N/A
31	471	442	371	626	220	426.0	N/A
32	472	443	372	621	220	425.6	N/A
33	473	445	372	626	220	427.2	N/A
34	474	445	372	630	218	427.8	N/A
35	476	447	373	637	218	430.2	N/A
36	477	452	374	643	217	432.6	N/A
37	478	450	374	643	217	432.4	N/A
38	479	453	375	640	218	433.0	N/A
39	481	457	377	648	216	435.8	N/A
40	483	457	378	637	216	434.2	N/A
41	484	458	379	643	216	436.0	N/A
42	486	457	381	643	215	436.4	N/A
43	487	459	382	635	215	435.6	N/A
44	489	465	383	641	214	438.4	N/A
45	491	464	386	638	214	438.6	N/A
46	493	468	388	638	214	440.2	N/A
47	494	469	389	643	214	441.8	N/A

WOODSTOVE SURFACE TEMPERATURE DATA

Client: FPI
Model: F1150
Run #: 3

Job #: 19-496
Tracking #: 0031
Technician: SJB
Date: 7/24/2019

	Temperature Data (°F)						
Elapsed Time (min)	FB Left	FB Right	FB Back	FB Top	FB Bottom	Stove Surface Average	Catalyst Exit
48	495	472	391	639	215	442.4	N/A
49	497	473	391	635	214	442.0	N/A
50	500	475	393	646	214	445.6	N/A
51	501	480	394	638	215	445.6	N/A
52	503	482	396	642	215	447.6	N/A
53	505	484	396	646	215	449.2	N/A
54	507	485	396	646	216	450.0	N/A
55	509	487	398	652	216	452.4	N/A
56	510	487	400	652	216	453.0	N/A
57	511	490	401	647	216	453.0	N/A
58	513	494	405	651	215	455.6	N/A
59	514	492	407	634	217	452.8	N/A
60	516	494	410	632	217	453.8	N/A
61	517	495	413	621	217	452.6	N/A
62	518	497	416	612	217	452.0	N/A
63	519	497	418	599	218	450.2	N/A
64	521	497	420	591	219	449.6	N/A
65	522	500	423	573	218	447.2	N/A
66	523	499	424	561	219	445.2	N/A
67	524	497	426	553	220	444.0	N/A
68	525	497	426	544	221	442.6	N/A
69	525	497	427	538	221	441.6	N/A
70	526	496	426	527	222	439.4	N/A
71	526	497	427	522	223	439.0	N/A
72	526	496	428	514	223	437.4	N/A
73	526	495	427	498	224	434.0	N/A
74	526	494	427	494	224	433.0	N/A
75	526	493	426	481	225	430.2	N/A
76	525	490	425	479	226	429.0	N/A
77	525	488	424	467	226	426.0	N/A
78	524	486	423	461	226	424.0	N/A
79	523	483	422	453	227	421.6	N/A
80	522	480	421	447	227	419.4	N/A
81	522	478	420	438	228	417.2	N/A
82	520	476	418	437	227	415.6	N/A
83	519	478	418	431	228	414.8	N/A
84	518	472	416	422	229	411.4	N/A
85	516	470	415	419	229	409.8	N/A
86	515	470	413	419	230	409.4	N/A
87	514	467	413	412	229	407.0	N/A
88	513	464	411	407	230	405.0	N/A
89	511	463	409	403	231	403.4	N/A
90	510	462	406	404	231	402.6	N/A
91	509	460	404	397	231	400.2	N/A
92	507	459	401	394	231	398.4	N/A
93	505	456	396	387	232	395.2	N/A
94	503	453	391	387	232	393.2	N/A
95	500	452	387	378	232	389.8	N/A

WOODSTOVE SURFACE TEMPERATURE DATA

Client: FPI
Model: F1150
Run #: 3

Job #: 19-496
Tracking #: 0031
Technician: SJB
Date: 7/24/2019

	Temperature Data (°F)						
Elapsed Time (min)	FB Left	FB Right	FB Back	FB Top	FB Bottom	Stove Surface Average	Catalyst Exit
96	499	450	382	379	233	388.6	N/A
97	496	449	377	376	233	386.2	N/A
98	494	444	371	370	233	382.4	N/A
99	491	440	367	372	233	380.6	N/A
100	489	438	363	368	233	378.2	N/A
101	486	435	360	363	233	375.4	N/A
102	484	435	357	354	233	372.6	N/A
103	481	432	354	357	232	371.2	N/A
104	478	428	351	349	233	367.8	N/A
105	477	424	348	353	233	367.0	N/A
106	474	421	344	350	233	364.4	N/A
107	472	421	341	341	233	361.6	N/A
108	470	418	337	343	233	360.2	N/A
109	468	417	334	344	233	359.2	N/A
110	466	416	330	338	232	356.4	N/A
111	464	413	327	338	232	354.8	N/A
112	462	409	324	335	232	352.4	N/A
113	460	407	321	335	232	351.0	N/A
114	458	405	318	332	231	348.8	N/A
115	456	403	315	332	231	347.4	N/A
116	454	403	312	330	231	346.0	N/A
117	452	401	309	328	230	344.0	N/A
118	450	399	306	322	230	341.4	N/A
119	449	396	304	323	230	340.4	N/A
120	447	396	301	318	230	338.4	N/A
121	444	393	298	317	228	336.0	N/A
122	442	394	296	315	229	335.2	N/A
123	441	392	295	311	227	333.2	N/A
124	438	390	293	311	227	331.8	N/A
125	437	390	291	310	226	330.8	N/A
126	435	387	288	312	226	329.6	N/A
127	433	386	286	311	226	328.4	N/A
128	431	384	285	306	225	326.2	N/A
129	429	384	283	303	224	324.6	N/A
130	427	381	282	305	224	323.8	N/A
131	426	380	281	305	223	323.0	N/A
132	423	378	279	301	222	320.6	N/A
133	422	375	278	303	221	319.8	N/A
134	420	376	276	298	222	318.4	N/A
135	419	375	274	302	221	318.2	N/A
136	417	373	273	297	220	316.0	N/A
137	415	374	272	295	219	315.0	N/A
138	413	371	271	296	219	314.0	N/A
139	412	369	269	294	218	312.4	N/A
140	409	370	268	291	217	311.0	N/A
141	407	368	267	291	217	310.0	N/A
142	406	366	266	289	216	308.6	N/A
143	404	366	264	286	215	307.0	N/A

WOODSTOVE SURFACE TEMPERATURE DATA

Client: FPI
Model: F1150
Run #: 3

Job #: 19-496
Tracking #: 0031
Technician: SJB
Date: 7/24/2019

	Temperature Data (°F)						
Elapsed Time (min)	FB Left	FB Right	FB Back	FB Top	FB Bottom	Stove Surface Average	Catalyst Exit
144	403	364	263	288	215	306.6	N/A
145	401	364	261	284	215	305.0	N/A
146	399	363	260	285	214	304.2	N/A
147	398	362	259	286	214	303.8	N/A
148	395	360	257	283	213	301.6	N/A
149	393	359	257	280	212	300.2	N/A
150	392	358	255	283	212	300.0	N/A
151	390	357	254	279	211	298.2	N/A
152	388	356	254	278	210	297.2	N/A
153	387	354	253	275	210	295.8	N/A
154	385	352	252	275	209	294.6	N/A
155	383	352	251	271	208	293.0	N/A
156	382	351	251	270	208	292.4	N/A
157	380	351	250	269	207	291.4	N/A
158	378	350	249	267	206	290.0	N/A
159	376	348	248	265	206	288.6	N/A
160	375	346	247	267	206	288.2	N/A
161	373	344	247	266	205	287.0	N/A
162	371	344	245	263	204	285.4	N/A
163	370	341	244	265	204	284.8	N/A
164	369	341	243	261	203	283.4	N/A
165	367	340	242	260	203	282.4	N/A
166	365	339	242	262	202	282.0	N/A
167	364	337	241	257	201	280.0	N/A
168	362	337	240	256	200	279.0	N/A
169	360	336	239	257	200	278.4	N/A
170	359	332	238	256	199	276.8	N/A
171	357	333	238	254	198	276.0	N/A
172	356	331	237	254	198	275.2	N/A
173	354	333	237	249	196	273.8	N/A
174	353	330	236	251	196	273.2	N/A
175	351	331	235	251	195	272.6	N/A
176	349	327	235	251	195	271.4	N/A
177	348	327	234	250	194	270.6	N/A
178	347	324	232	250	195	269.6	N/A
179	345	324	232	247	193	268.2	N/A
180	344	322	231	248	193	267.6	N/A
181	342	322	230	247	193	266.8	N/A
182	341	322	229	248	192	266.4	N/A
183	339	321	228	248	192	265.6	N/A
184	338	320	227	246	191	264.4	N/A
185	337	319	227	246	191	264.0	N/A
186	336	319	226	244	190	263.0	N/A
187	334	317	225	239	189	260.8	N/A
188	333	315	224	242	189	260.6	N/A
189	331	315	224	241	189	260.0	N/A
190	330	313	223	241	188	259.0	N/A
191	329	312	222	240	188	258.2	N/A

WOODSTOVE SURFACE TEMPERATURE DATA

Client: FPI
Model: F1150
Run #: 3

Job #: 19-496
Tracking #: 0031
Technician: SJB
Date: 7/24/2019

	Temperature Data (°F)						
Elapsed Time (min)	FB Left	FB Right	FB Back	FB Top	FB Bottom	Stove Surface Average	Catalyst Exit
192	328	313	221	241	188	258.2	N/A
193	327	313	221	241	187	257.8	N/A
194	325	310	220	236	187	255.6	N/A
195	324	309	219	239	187	255.6	N/A
196	323	309	218	236	186	254.4	N/A
197	322	310	218	237	185	254.4	N/A
198	320	307	217	236	185	253.0	N/A
199	320	307	217	235	185	252.8	N/A
200	318	306	216	233	184	251.4	N/A
201	317	305	215	233	184	250.8	N/A
202	316	304	215	233	183	250.2	N/A
203	315	304	214	232	183	249.6	N/A
204	314	303	214	231	183	249.0	N/A
205	313	302	213	231	183	248.4	N/A
206	312	301	213	230	182	247.6	N/A
207	311	300	212	229	182	246.8	N/A
208	310	299	212	229	182	246.4	N/A
209	309	299	212	228	181	245.8	N/A
210	308	298	211	227	181	245.0	N/A
211	307	298	211	225	180	244.2	N/A
212	306	294	210	221	180	242.2	N/A
213	305	295	210	222	179	242.2	N/A
214	304	295	209	223	179	242.0	N/A
215	303	295	208	223	179	241.6	N/A
216	302	294	208	222	178	240.8	N/A
217	301	294	207	223	178	240.6	N/A
218	300	294	207	221	178	240.0	N/A
219	299	293	206	221	178	239.4	N/A
220	299	291	206	218	177	238.2	N/A
221	298	291	206	220	177	238.4	N/A
222	297	290	205	218	177	237.4	N/A
223	296	290	205	219	177	237.4	N/A
Average	433	401	322	399	212	353	N/A

LAB SAMPLE DATA - ASTM E2515

Client: FPI
Model: F1150
Run #: 3

Job #: 19-496
Tracking #: 0031
Technician: SJB
Date: 7/24/2019

	Sample ID	Tare, mg	Total, mg	Final, mg	Catch, mg
Train A Filters - First Hour	T271	87.7	87.7	90.4	2.7
Train A Filters - Remainder	T272	87.2	175.0	175.7	0.7
	T273	87.8			
Train A Probe	10A	116820.5	116820.5	116820.6	0.1
Train A O-Rings	10A	3427.9	3427.9	3428.6	0.7
Train B Filters	T274	87.1	173.6	176.6	3.0
	T275	86.5			
Train B Probe	10B	117905.2	117905.2	117905.2	0.0
Train B O-Rings	10B	3568.6	3568.6	3569.2	0.6
Background Filter	T276	86.2	86.2	86.3	0.1

Placed in Dessicator on:	7/24 - 15:20

Train A Filters - First Hour	90.4	7/26 8:56	90.4	7/26 16:08				
Train A Filters - Remainder	175.7	7/26 8:56	175.7	7/26 16:08				
Train A Probe	116820.5	7/26 8:56	116820.6	7/26 16:08				
Train A O-Rings	3428.4	7/26 8:56	3428.6	7/26 16:08				
Train B Filters	176.6	7/26 8:56	176.6	7/26 16:09				
Train B Probe	117905.0	7/26 8:56	117905.2	7/26 16:09				
Train B O-Rings	3569.3	7/26 8:56	3569.2	7/26 16:09				
Background Filter	86.4	7/26 8:56	86.3	7/26 16:10				

1st hour Sub-Total, mg:	2.7
Remainder Sub-Total, mg:	1.5
Train 1 Aggregate, mg:	**4.2**
Train 2 Aggregate, mg:	**3.6**
Ambient Aggregate, mg:	0.1

1.77
1.53
1.89
1.66
1.08

HI
OK
LO
1.52
ZERO
TARE
STAB
ACC
LB
KG

3.43
2.01

ASTM E3053 Wood Heater Run Sheets

Client: FPI Job Number: 19-496 Tracking #: 0031
Model: F1150 Run Number: 3 Test Date: 7/24/2019

Wood Heater Run Notes

Pre-Test Notes
Pre-Test Start Time: 10:02
Air Control Setting: Full Open

Time	Notes
0 min	Started with 0.9 lbs of kindling, propane torch for 20 seconds, door left cracked open.
3 min	Door closed.
6 min	@0.2 lbs added remaining kindling and a couple start-up pieces, 1.7 lbs total
15 min	@0.5 lbs, added remaining start-up fuel, 1.5 lbs.
21 min	@1.1 lbs, leveled coal bed and loaded high fire fuel load, door closed in 40 seconds.
36 min	Turned fan on high.
64 min	@3.0 lbs stirred fuel to ensure uniform charcoalization of coal bed
79 min	@1.7lbs leveled coal bed, zeroed scale, and turned off fan in preparation of fuel loading.

Test Notes
Test Burn Start Time: 11:22
Air Control Setting: Medium Fire Air Setting

Time	Notes
0 min	Loaded medium fire test fuel, loading done at 30 seconds, door closed at 40 seconds.
6.5 min	Set air control to test setting.
15 min	Fan turn on to low setting.
60 min	Changed 1-hr filter.
223 min	End of test.

Test Burn End Time: 13:05

Flue Gas Concentration Measurement

Calibration Gas Values: Span Gas CO_2 (%): 17.00 CO (%): 4.310
Mid Gas CO_2 (%): 10.00 CO (%): 2.51

Calibration Results:

	Pre Test			Post Test		
	Zero	Mid	Span	Zero	Mid	Span
Time	10:16	10:19	10:18	15:21	15:24	15:25
CO_2	0.00	10.05	17.00	-0.06	9.94	16.86
CO	0.000	2.478	4.310	-0.012	2.458	4.281

Flue Gas Probe Leak Check: Initial: No Leakage Final: No Leakage

Technician Signature: _____ Date: 7/24/2019

ED_005996_00000513-00175

ASTM E3053 Wood Heater Run Sheets

Client: FPI | Job Number: 19-496 | Tracking #: 0031
Model: F1150 | Run Number: 3 | Test Date: 7/24/2019

Test Photos

Kindling Fuel Load

Start-up Fuel Load

High Fire Fuel Load

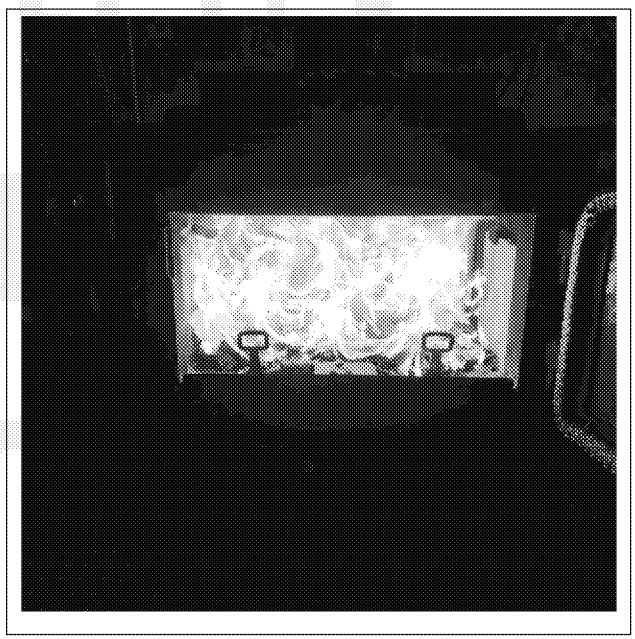

Residual Start-up Fuel Coal Bed

Technician Signature: _____ Date: 7/24/2019

ASTM E3053 Wood Heater Run Sheets

Client: FPI | Job Number: 19-496 | Tracking #: 0031
Model: F1150 | Run Number: 3 | Test Date: 7/24/2019

High Fire Fuel Loaded

Residual High Fire Load Coal Bed

Medium Fire Fuel Load

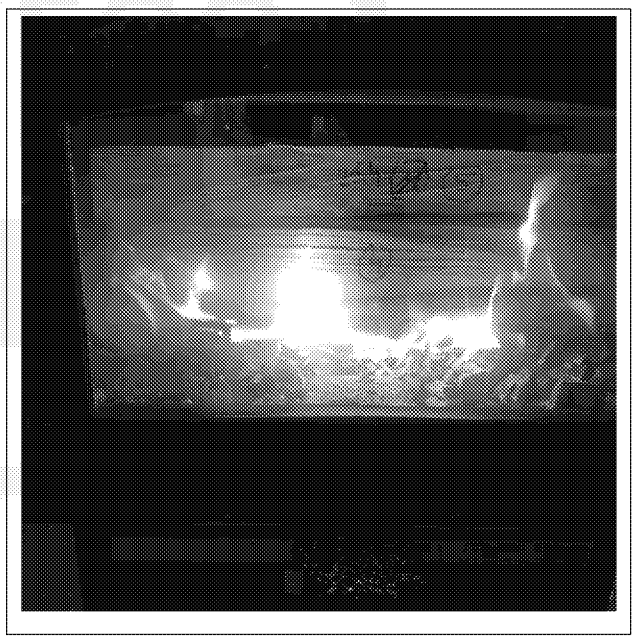

Medium Fire Fuel Loaded

Technician Signature: _____ Date: 7/24/2019

301
HI
OK
LO
2.51
ZERO
TARE
STAB
ACC
LB

ASTM E2515 - Filters

Sample	Weight 1	Weight 2	Weigth 3	Weight 4	Initial	Project	Run
T251	87.3	87.3	–	–	SB	19-480	#2
T252	87.0	86.8	–	–	SB	19-480	#3
T253	86.9	87.1	–	–	SB	19-480	#3
T254	87.5	87.5	–	–	SB	19-480	#3
T255	88.0	87.8	–	–	SB	19-480	#3
T256	87.8	87.9	–	–	SB	19-480	#3
T257	87.0	86.9	–	–	SB	19-496	#1
T258	87.5	87.5	–	–	SB		
T259	87.5	87.7	–	–	SB		
T260	87.8	87.9	–	–	SB		
T261	86.9	86.8	–	–	SB		
T262	88.4	88.5	–	–	SB		
T263	88.2	88.2	–	–	SB		
T264	87.9	87.9	–	–	SB		
T265	89.1	89.1	–	–	SB	19-496	#2
T266	89.7	89.6	–	–	SB		
T267	88.4	88.5	–	–	SB		
T268	88.2	88.2	–	–	SB		

Weight 1 Date/Time:
6/14 - 1400
Weight 2 Date/Time:
6/17 - 8:00
Weight 3 Date/Time:
Weight 4 Date/Time:

Sample	Weight 1	Weight 2	Weigth 3	Weight 4	Initial	Project	Run
T269	87.7	87.8	–	–	SB	19-496	#2
T270	88.2	88.2	–	–	SB		
T271	87.7	87.7	–	–	SB	19-496	#3
T272	87.3	87.2	–	–	SB		
T273	87.8	87.8	–	–	SB		
T274	87.1	87.1	–	–	SB		
T275	86.6	86.5	–	–	SB		
T276	86.2	86.2	–	–	SB		
T277	86.8	86.8	–	–	SB		
T278	87.3	87.2	–	–	SB		
T279	87.2	87.1	–	–	SB		
T280	88.0	87.9	–	–	SB		
T281	87.9	88.0	–	–	SB		
T282	86.9	86.9	–	–	SB		
T283	86.9	86.8	–	–	SB		
T284	87.2	87.0	–	–	SB		
T285	87.2	87.2	–	–	SB		
T286	87.6	87.5	–	–	SB		

Weight 1 Date/Time:
6/14 - 14:00
Weight 2 Date/Time:
6/17 - 8:00
Weight 3 Date/Time:
Weight 4 Date/Time:

ASTM E2515 - Probes

Sample	Weight 1	Weight 2	Weigth 3	Weight 4	Initial	Project	Run
1A	115630.0	115630.2	–	–	SB	18-449	#1
1B	115903.7	115903.8	–	–	SB		
2A	116240.5	116240.5	–	–	SB	18-449	#2
2B	116330.5	116330.6	–	–	SB		
3A	116078.1	116078.1	–	–	SB	18-449	#3
3B	116340.8	116340.9	–	–	SB		
4A	116183.6	116183.8	–	–	SB	19-480	#1
4B	116365.8	116366.0	–	–	SB		
5A	116769.1	116769.7	116769.1	116769.3	SB	19-480	#2
5B	116876.8	116877.2	116876.8	116876.9	SB		

Weight 1 Date/Time:
6/10 - 7:00

Weight 2 Date/Time:
6/11 - 7:45

Weight 3 Date/Time:
6/13 - 8:30

Weight 4 Date/Time:
6/14 - 7:30

Sample	Weight 1	Weight 2	Weigth 3	Weight 4	Initial	Project	Run
6A	116544.8	116545.5	116545.3	–	SB	19-480	#3
6B	116117.9	116118.4	116118.4	–	SB		
7A	116740.8	116741.1	116741.2	–	SB	19-495	#1
7B	117288.9	117289.1	117289.0	–	SB	↓	↓
8A	116823.4	116824.4	116824.3	–	SB	19-496	#1
8B	116825.8	116826.3	116826.2	–	SB	↓	#1
9A	116714.4	116714.2	–	–	SB	19-496	#2
9B	117920.6	117920.1	117920.3	–	SB	↓	#2
10A	116820.7	116820.5	–	–	SB	19-496	#3
10B	117905.3	117905.2	–	–	SB	↓	#3

Weight 1 Date/Time:
6/13 - 8:30

Weight 2 Date/Time:
6/14 - 7:30

Weight 3 Date/Time:
6/17 - 7:00

Weight 4 Date/Time:

Sample	Weight 1	Weight 2	Weigth 3	Weight 4	Initial	Project	Run
11A	117035.5	117035.7	–	–	SB	19-509	#1
11B	117489.9	117489.9	–	–	SB	↓	#1
12A	116889.3	116889.1	–	–	SB	19-509	#2
12B	117957.1	117957.2	–	–	SB	19-509	#2
13A	117456.0	117455.8	–	–	SB	19-509	#3
13B	117054.7	117054.9	–	–	SB	19-509	#3
14A	116818.1	116817.8	116817.7	–	SB	19-509	#4
14B	116772.0	116771.7	116771.5	–	SB	19-509	#4
15A	117418.9	117418.8	–	–	SB	19-509	#5
15B	116905.2	116905.3	–	–	SB	19-509	#5

Weight 1 Date/Time:
7/22 - 7:00

Weight 2 Date/Time:
7/23 - 8:00

Weight 3 Date/Time:
7/24 - 8:00

Weight 4 Date/Time:

ASTM E2515 - O-Rings

Sample	Weight 1	Weight 2	Weigth 3	Weight 4	Initial	Project	Run
1A	3562.7	3562.8	–	–	SB	18-449	#1
1B	3551.3	3551.3	–	–	SB		
2A	3548.4	3548.5	–	–	SB	18-449	#2
2B	3566.9	3567.1	–	–	SB		
3A	3575.6	3575.7	–	–	SB	18-449	#3
3B	3564.0	3564.2	–	–	SB		
4A	3588.4	3588.5	–	–	SB	19-480	#1
4B	3576.1	3576.3	–	–	SB		
5A	3530.2	3530.2	–	–	SB	19-480	#2
5B	3526.8	3526.9	–	–	SB		

Weight 1 Date/Time:
6/10 - 7:00
Weight 2 Date/Time:
6/11 - 7:45
Weight 3 Date/Time:
Weight 4 Date/Time:

Sample	Weight 1	Weight 2	Weigth 3	Weight 4	Initial	Project	Run
6A	3611.1	3611.2	–	–	SB	19-480	#3
6B	3387.9	3387.8	–	–	SB		
7A	3570.0	3570.1	–	–	SB	19-495	#1
7B	3518.8	3519.0	–	–	SB		
8A	3548.8	3549.0	–	–	SB	19-496	#1
8B	3582.2	3582.3	–	–	SB		
9A	3579.9	3580.1	–	–	SB	19-496	#2
9B	3522.5	3522.7	–	–	SB		
10A	3427.7	3427.9	–	–	SB	19-496	#3
10B	3568.4	3568.6	–	–	SB		

Weight 1 Date/Time:
6/10 - 7:00
Weight 2 Date/Time:
6/13 - 8:30
Weight 3 Date/Time:
Weight 4 Date/Time:

Sample	Weight 1	Weight 2	Weigth 3	Weight 4	Initial	Project	Run
11A	3421.6	3422.2	3422.3	–	SB	19-509	#1
11B	4232.2	4232.8	4232.8	–	SB		
12A	3393.9	3394.0	–	–	SB	19-509	#2
12B	3403.9	3404.1	–	–	SB		
13A	3358.8	3359.0	–	–	SB	19-509	#3
13B	3443.2	3443.6	3443.6	–	SB		
14A	3364.1	3364.2	–	–	SB	19-509	#4
14B	3338.3	3338.5	–	–	SB		
15A	3567.9	3568.1	–	–	SB	19-509	#5
15B	3568.3	3568.7	3568.8	–	SB		

Weight 1 Date/Time:
7/22 - 7:15
Weight 2 Date/Time:
7/24 - 8:00
Weight 3 Date/Time:
7/25 - 7:00
Weight 4 Date/Time:

REGENCY®
FIREPLACE PRODUCTS

Cascades™ Series Freestanding Woodstove

Owners & Installation Manual

French Manual Download:
Manuel en Français:

www.regency-fire.com

MODEL: F1150

Tested by:

Tested & Listed By O-T-L Portland Oregon USA
OMNI-Test Laboratories, Inc.

0219WS027S

Installer: Please complete the details on the back cover and leave this manual with the homeowner.
Homeowner: Please keep these instructions for future reference.

920-130 **FPI FIREPLACE PRODUCTS INTERNATIONAL LTD. 6988 Venture St., Delta, BC Canada, V4G 1H4** 08.06.19

ED_005996_00000513-00185

Thank-you for purchasing a
REGENCY FIREPLACE PRODUCT.

The pride of workmanship that goes into each of our products will give you years of trouble-free enjoyment. Should you have any questions about your product that are not covered in this manual, please contact the **REGENCY DEALER** in your area.

"This wood heater has a manufacturer set minimum low burn rate that must not be altered. It is against federal regulations to alter this setting or otherwise operate this wood heater in a manner inconsistent with operating instructions in this manual." Failure to follow the manual details can lead to smoke and CO emissions spilling into the home. It is recommended to have monitors in areas that are expected to generate CO such as heater fueling areas.

"U.S. ENVIRONMENTAL PROTECTION AGENCY Certified to comply with 2020 particulate emission standards using cord wood." Model Regency F1150 - 1.7g/hr.

"This manual describes the installation and operation of the Regency F1150 wood heater. This heater meets the 2020 U.S. Environmental Protection Agency's cord wood emission limits for wood heaters. Under specific test conditions this heater has been shown to deliver heat at rates ranging from 12,800 BTU/hr. to 39,100 BTU/hr." Efficiency is determined using the B415 method resulting in lower and higher heat values. This heater generates the best efficiency when operated using well-seasoned wood and installed in the main living areas where the majority of the chimney is within the building envelope."

It is against federal regulation to operate this wood heater in a manner inconsistent with operating instructions in this manual.

CAUTION: BURN UNTREATED WOOD ONLY. OTHER MATERIALS SUCH AS WOOD PRESERVATIVES, METAL FOILS, COAL, PLASTIC, GARBAGE, SULPHUR OR OIL MAY DAMAGE THE STOVE.

"This heater is designed to burn natural wood only. Higher efficiencies and lower emissions generally result when burning air dried seasoned hardwoods, as compared to softwoods or to green or freshly cut hardwoods."

DO NOT BURN:

- Treated wood
- Coal
- Garbage
- Cardboard
- Solvents
- Colored Paper
- Trash
- **Lawn clippings or yard waste**
- **Materials containing rubber including tires**
- **Materials containing plastic**
- **Waste petroleum products , paints or paint thinners or asphalt products**
- **Materials containing asbestos**
- **Construction or demolition debris**
- **Railroad ties**
- **Manure or animal remains**
- **Saltwater driftwood or other previously salt water saturated materials**
- **Unseasoned wood**
- **Paper products, cardboard, plywood or particle board. The prohibition against burning these materials does not prohibit the use of fire starters made from paper, cardboard, saw dust, wax and similar substances for the purpose of starting a fire in a wood heater.**

Burning these materials may result in release of toxic fumes or render the heater ineffective and cause smoke.

The authority having jurisdiction (such as Municipal Building Department, Fire Department, Fire Prevention Bureau, etc.) should be consulted before installation to determine the need to obtain a permit.

This unit must be connected to either a listed factory built chimney suitable for use with solid fuels and conforming to, ULC629 in Canada or UL-103HT in the United States of America. or code approved masonry chimney with flue liner.

F1150 is tested and certified to ULC-S627-00 and UL1482-2011 (R2015).

SAVE THESE INSTRUCTIONS

NATIONAL FIREPLACE INSTITUTE NFI CERTIFIED

We recommend that our products be installed and serviced by professionals who are certified in the U.S. by the National Fireplace Institute® (NFI) or in Canada by Wood Energy Technical Training (WETT).

Wood Energy Technical Training

WARNING: Cancer and Reproductive Harm
www.P65Warnings.ca.gov
919-874

table of contents

safety label copy
Safety Label for F1150 4

dimensions
Unit Dimensions 5
Outside Air Dimensions 5

installation
Modular Installation Options 6
Room Air - Important 6
Stove Assembly Prior to Installation 7
Airmate Assembly for F1150 7
Rear Heat Deflector 7
Assembly for F1150 7
Side Shield Adjustment 7
Pedestal Assembly Installation 8
Logo Installation 8
Bottom Heat Shield and Legs Installation 8
Minimum Clearance to Combustible Materials 9
Minimum Alcove Clearance and Clearance to Combustible Materials 10
Floor Protection 10
Floor Protection (Corner Installation) 11
Step by Step Chimney and Connector Installation 12
Masonry Chimney 13
Masonry Fireplace 13
Factory Built Chimney 13
Combustible Wall Chimney Connector Pass-throughs 14
Mobile Home Installation 15
Mobile Home Kit - for Canada 16
Installing Outside Air from Pedestal Base 17
Installing Outside Air Using Bottom Heat Shield/Legs. 17
Recommended Heights For Woodstove Flue 18
Optional Outside Air Kit 19
Brick Installation 20
Removing Wooden Handle 21
Glass Installation 21
Wood Door & Handle Assembly 22
Fan Installation 23
Stainless steel smoke deflector installation 24
Brick Flue Baffle Removal / Installation 25
Seasoned Firewood 26

operation
Operating Instructions 26
Draft Control 26
Air Operating Handle 26
Fan Operation 28
Ash Disposal 28
Safety Precautions 28
Ash Drawer Operating Guidelines 28
Safety Guidelines and Warnings 28

maintenance
Maintenance 30
Creosote 30
Ways to Prevent and Keep Unit Free of Creosote 30
Door Gasket 30
Glass Maintenance 30
Wood Storage 30
Secondary Air Tube Removal / Installation 31
Latch Adjustment 31
Vertical Stainless Deflector Replacement 32

parts
Main Assembly 34
Bottom Shield and Legs 36
Pedestal Assembly 36
Complete Brick Kit 37

warranty
Warranty ....39 - 42

CAUTION: To avoid burns or wood splinters, when opening/closing the fuel door or adding wood to the fire, You should always wear appropriate protective gloves to protect your hands from the heat being emitted from this fireplace.

ED_005996_00000513-00187

safety decal

This is a copy of the label that accompanies each Regency Freestanding Woodstove (F1150). We have printed a copy of the contents here for your review.

NOTE: Regency units are constantly being improved. Check the label on the unit and if there is a difference, the label on the unit is the correct one.

Safety Label for F1150

duplicate serial number **530**

0219WS027S

LISTED SPACE HEATER, SOLID FUEL TYPE, ALSO SUITABLE FOR MOBILE HOME INSTALLATION / APPAREIL DE CHAUFFAGE AMBIANT HOMOLOGUÉ À COMBUSTIBLE SOLIDE, CONVENANT AUSSI POUR INSTALLATION DANS UNE MAISON MOBILE

DO NOT REMOVE THIS LABEL/ NE RETIREZ PAS CETTE ÉTIQUETTE

530

MODEL: REGENCY SMALL FREESTANDING STOVE - F1150
TESTED TO: ULC S627-00 / UL 1482-2011 (R2015)

U.S. ENVIRONMENTAL PROTECTION AGENCY CERTIFIED TO COMPLY WITH 2020 PARTICULATE EMISSION STANDARDS USING CORD WOOD." TESTED TO ASTM E3053. MODEL REGENCY F1150 – 1.7G /HR. THIS WOOD HEATER NEEDS PERIODIC INSPECTION AND REPAIR FOR PROPER OPERATION. CONSULT THE OWNER'S MANUAL FOR FURTHER INFORMATION. IT IS AGAINST FEDERAL REGULATIONS TO OPERATE THIS WOOD HEATER IN A MANNER INCONSISTENT WITH THE OPERATING INSTRUCTIONS IN THE OWNER'S MANUAL.
CERTIFIÉ CONFORME AUX NORMES 2020 DU U.S. ENVIRONMENTAL PROTECTION AGENCY EN MATIÈRE D'ÉMISSION DE PARTICULES DE BOIS AVEC DU BOIS DE CORDE". APPROUVÉ ASTM E3053. MODÈLE REGENCY F1150M – 1,7 G /H. CET APPAREIL DE CHAUFFAGE AU BOIS DOIT ÊTRE INSPECTÉ PÉRIODIQUEMENT ET RÉPARÉ POUR FONCTIONNER CORRECTEMENT. CONSULTER LE MANUEL D'INSTALLATION POUR PLUS D'INFORMATION. LA RÉGLEMENTATION FÉDÉRALE INTERDIT DE FAIRE FONCTIONNER UN TEL APPAREIL SI LES CONSIGNES D'UTILISATION CONTENUES DANS LE PRÉSENT MANUEL NE SONT PAS RESPECTÉES.

INSTALL AND USE ONLY IN ACCORDANCE WITH THE MANUFACTURER'S INSTALLATION AND OPERATING INSTRUCTIONS. CONTACT LOCAL BUILDING OR FIRE OFFICIALS ABOUT RESTRICTIONS AND INSTALLATION INSPECTION IN YOUR AREA. USE 150 MM (6 IN.) DIAMETER MINIMUM 24 MSG BLACK OR 26 MSG BLUED STEEL CONNECTOR WITH LISTED UL103 HT FACTORY-BUILT CHIMNEY SUITABLE FOR USE WITH SOLID FUELS OR MASONRY CHIMNEY.
SEE LOCAL BUILDING CODE AND MANUFACTURER'S INSTRUCTIONS FOR PRECAUTIONS REQUIRED FOR PASSING A CHIMNEY THROUGH A COMBUSTIBLE WALL OR CEILING. DO NOT PASS CHIMNEY CONNECTOR THROUGH COMBUSTIBLE WALL OR CEILING. DO NOT CONNECT THIS UNIT TO A CHIMNEY FLUE SERVING ANOTHER APPLIANCE.
INSTALLER ET UTILISER SEULEMENT SELON LES INSTRUCTIONS D'INSTALLATION ET D'UTILISATION DU FABRICANT. CONTACTER LES RESPONSABLES DU BÂTIMENT OU DU SERVICE-INCENDIE DE VOTRE RÉGION POUR CONNAÎTRE LES RESTRICTIONS ET EXIGENCES D'INSPECTION DANS VOTRE RÉGION. UTILISER UN CONNECTEUR D'UN DIAMÈTRE MINIMAL DE 150 MM (6 PO) 24 MSG EN ACIER NOIR OU 26 MSG EN ACIER BRONZÉ AVEC CHEMINÉE PRÉFABRIQUÉE HOMOLOGUÉE UL103 HT CONÇUE POUR UTILISATION AVEC COMBUSTIBLES SOLIDES OU UNE CHEMINÉE DE MAÇONNERIE.
VOIR LE CODE DU BÂTIMENT LOCAL ET LES INSTRUCTIONS DU FABRICANT CONCERNANT LES PRÉCAUTIONS EXIGÉES POUR INSTALLER UNE CHEMINÉE TRAVERSANT UN MUR OU PLAFOND EN MATÉRIAUX COMBUSTIBLES. NE FAITES PAS TRAVERSER LE CONNECTEUR DE CHEMINÉE DANS UN MUR OU PLAFOND EN MATÉRIAUX COMBUSTIBLES. NE RACCORDEZ PAS CE POÊLE À BOIS À UN CONDUIT DE CHEMINÉE DESSERVANT UN AUTRE APPAREIL.

MINIMUM ALCOVE CEILING HEIGHT: 2109 MM / 83" MAXIMUM ALCOVE DEPTH 915 MM / 36 IN.
MINIMUM CLEARANCES FOR HORIZONTAL CONNECTOR TO CEILING: 455 MM / 18"
THE SPACE BENEATH THE HEATER MUST NOT BE OBSTRUCTED. OPERATE ONLY WITH FIREBRICKS IN PLACE.
FOR USE WITH SOLID WOOD FUEL ONLY. USE OF OTHER FUELS MAY DAMAGE HEATER AND CREATE A HAZARDOUS CONDITION. DO NOT OBSTRUCT COMBUSTION AIR OPENINGS. OPERATE ONLY WITH FIREBRICKS IN PLACE. RISK OF SMOKE AND FLAME SPILLAGE, OPERATE ONLY WITH DOORS FULLY CLOSED. IF INSTALLED IN A MOBILE HOME OPERATE ONLY WITH DOORS FULLY CLOSED - OPEN FEED DOOR TO FEED FIRE ONLY. DO NOT USE GRATE OR ELEVATE FIRE. BUILD WOOD FIRE DIRECTLY ON HEARTH. DO NOT OVERFIRE - IF HEATER OR CHIMNEY CONNECTOR GLOWS YOU ARE OVERFIRING. INSPECT AND CLEAN CHIMNEY AND CONNECTOR FREQUENTLY. UNDER CERTAIN CONDITIONS OF USE CREOSOTE BUILDUP MAY OCCUR RAPIDLY. KEEP FURNISHINGS AND OTHER COMBUSTIBLE MATERIAL AWAY FROM HEATER. REPLACE GLASS ONLY WITH NEOCERAM GLASS. COMBUSTIBLE FLOOR MUST BE PROTECTED BY NON-COMBUSTIBLE MATERIAL EXTENDING BENEATH THE HEATER AND TO THE FRONT AND SIDES AS INDICATED OR TO THE NEAREST PERMITTED COMBUSTIBLE MATERIAL.
OPTIONAL COMPONENT: FAN PART #075-917, ELECTRICAL RATING: VOLTS 115, 60 HZ, 2 AMPS
DANGER: RISK OF ELECTRIC SHOCK. DISCONNECT POWER BEFORE SERVICING UNIT. DO NOT ROUTE POWER CORD UNDER OR IN FRONT OF APPLIANCE.
COMPONENTS REQUIRED FOR MOBILE HOME INSTALLATION: OUTSIDE AIR KIT
IN CANADA: LISTED ULCS 629 CHIMNEY. USE CHIMNEY COMPONENTS AS SPECIFIED IN INSTALLATION/INSTRUCTIONS
WARNING: ONLY USE LISTED REGENCY OPTIONS SUCH AS LEGS, AIRMATE, FAN AS SHOWN IN THE INSTALLATION MANUAL.
CAUTION: BURNING OF MATERIALS OTHER THAN SPECIFIED MAY CAUSE DAMAGE TO THE UNIT.
CAUTION: MOVING PARTS MAY CAUSE INJURY.
IN USA: LISTED UL 103 HT CHIMNEY
HAUTEUR MINIMALE DU PLAFOND DE L'ALCÔVE : 2108 MM / 83 PO PROFONDEUR MAXIMALE DE L'ALCÔVE : 915 MM / 36 PO
DÉGAGEMENT MINIMAL DU PLAFOND POUR UN CONNECTEUR HORIZONTAL : 455 MM / 18 PO.
L'ESPACE AU-DESSOUS DU POÊLE NE DOIT PAS ÊTRE OBSTRUÉ. UTILISER SEULEMENT AVEC LES BRIQUES RÉFRACTAIRES EN PLACE.
POUR UTILISATION AVEC BOIS SOLIDE SEULEMENT. L'UTILISATION D'AUTRES COMBUSTIBLES PEUT ENDOMMAGER LE POÊLE ET CRÉER UNE CONDITION DANGEREUSE. NE PAS OBSTRUER LES OUVERTURES D'AIR DE COMBUSTION. UTILISER SEULEMENT AVEC LA PORTE FERMÉE – OUVRIR LA PORTE DE CHARGEMENT POUR ALIMENTER LE FEU SEULEMENT. NE PAS UTILISER DE GRILLE À BÛCHES NI SURÉLEVER LE FEU. MONTER LE FEU DE BOIS DIRECTEMENT SUR L'ÂTRE. NE PAS SURCHAUFFER – SI LE POÊLE OU LE CONNECTEUR DE CHEMINÉE SE MET À ROUGIR, VOUS SURCHAUFFEZ. INSPECTEZ ET NETTOYEZ FRÉQUEMMENT LA CHEMINÉE ET LE CONNECTEUR. EN CERTAINES CONDITIONS D'UTILISATION, UN DÉPÔT DE CRÉOSOTE PEUT SE FORMER RAPIDEMENT. GARDEZ LES MEUBLES ET AUTRES MATÉRIAUX COMBUSTIBLES ÉLOIGNÉS DU POÊLE. REMPLACEZ LA VITRE SEULEMENT PAR DU VERRE EN NEOCERAM. LE PLANCHER COMBUSTIBLE DOIT ÊTRE PROTÉGÉ PAR DES MATÉRIAUX NON COMBUSTIBLES DÉPASSANT DU DESSOUS, DU DEVANT ET DES CÔTÉS DU POÊLE, TEL QU'INDIQUÉ, OU JUSQU'AU MATÉRIAU COMBUSTIBLE LE PLUS PRÈS PERMIS.
COMPOSANTS EN OPTION : VENTILATEUR, ALIMENTATION ÉLECTRIQUE : 115 VOLTS, 60 HZ, 2 AMP.
DANGER : RISQUE D'ÉLECTROCUTION. DÉCONNECTER L'ALIMENTATION ÉLECTRIQUE AVANT DE FAIRE L'ENTRETIEN DU POÊLE. NE PAS INSTALLER LE CORDON ÉLECTRIQUE SOUS OU DEVANT L'APPAREIL.
COMPOSANTS EXIGÉS POUR INSTALLATION DANS UNE MAISON MOBILE : KIT DE PRISE D'AIR EXTÉRIEUR.
AU CANADA : CHEMINÉE HOMOLOGUÉE ULCS 629. UTILISER LES PIÈCES DE LA CHEMINÉE TEL QUE SPÉCIFIÉ DANS LES CONSIGNES D'INSTALLATION. AUX ÉTATS-UNIS : CHEMINÉE HOMOLOGUÉE UL103HT.
AVERTISSEMENT : UTILISER SEULEMENT LES OPTIONS HOMOLOGUÉES PAR REGENCY COMME LES PATTES, LE DIFFUSEUR AIRMATE, LE VENTILATEUR COMME ILLUTRÉ DANS LE MANUEL D'INSTALLATION.
ATTENTION : COMBUSTION DE TOUT MATÉRIAU NON SPÉCIFIÉ PEUT ENDOMMAGER L'APPAREIL.
ATTENTION : LE DÉPLACEMENT DES PIÈCES PEUT ENTRAÎNER DES BLESSURES.

MINIMUM CLEARANCES TO COMBUSTIBLE MATERIALS
DÉGAGEMENTS MINIMUMS AUX MATÉRIAUX COMBUSTIBLES

F1150 WITH REAR DEFLECTOR OR AIRMATE

MEASURE FROM	HEATER	FLUE CENTER-LINE
RESIDENTIAL INSTALLATION USING SINGLE WALL CONNECTOR		
SIDEWALL	A 330 mm / 13 in	D 635 mm / 25 in
BACKWALL	B 267 mm / 10.5 in	E 433 mm / 17-1/6 in
CORNER	C 229 mm / 9 in	F 532 mm / 21 in
INSTALLATION USING LISTED DOUBLE WALL CONNECTOR - MOBILE HOME		
SIDEWALL	A 279 mm / 11 in	D 584 mm / 23 in
BACKWALL	B 127 mm / 5 in	E 294 mm / 11-9/16 in
CORNER	C 127 mm / 5 in	F 432 mm / 17 in
INSTALLATION USING LISTED DOUBLE WALL CONNECTOR - RESIDENTIAL CLOSE CLEARANCE		
SIDEWALL	A 279 mm / 11 in	D 584 mm / 23 in
BACKWALL	B 127 mm / 5 in	E 294 mm / 11-9/16 in
CORNER	C 127 mm / 5 in	F 432 mm / 17 in
INSTALLATION USING LISTED DOUBLE WALL CONNECTOR - ALCOVE		
SIDEWALL	G 279 mm / 11 in	I 584 mm / 23 in
BACKWALL	H 127 mm / 5 in	J 295 mm / 11-5/8 in

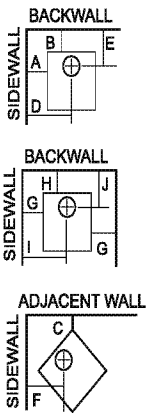

FLOOR PROTECTION*
PROTECTION DE PLANCHER*

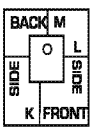

K 405 mm / 16 in
L 200 mm / 8 in
M 200 mm / 8 in

* In Canada, floor protection must extend 18" (450mm) to the front and 8" (200mm) to each side and back of the stove.

* Au Canada, la protection de plancher doit dépasser de 18 po (457 mm) à l'avant et de 8 po (200 mm) de chaque côté du poêle et derrière le poêle.

CAUTION

HOT WHILE IN OPERATION DO NOT TOUCH. KEEP CHILDREN, CLOTHING AND FURNITURE AWAY. CONTACT MAY CAUSE SKIN BURNS. READ NAMEPLATE AND INSTRUCTIONS.

ATTENTION

CHAUD EN COURS DE FONCTIONNEMENT. NE PAS TOUCHER. ÉLOIGNER LES ENFANTS, LES VÊTEMENTS ET LES MEUBLES DE L'APPAREIL. LE CONTACT AVEC L'APPAREIL PEUT OCCASIONNER DES BRÛLURES. LIRE CETTE ÉTIQUETTE ET LES CONSIGNES.

MANUFACTURED BY/ FABRIQUÉ PAR :
FPI FIREPLACE PRODUCTS INTERNATIONAL LTD.
6988 VENTURE ST.
DELTA, BC V4G 1H4

REGENCY

MADE IN CANADA / FABRIQUÉ AU CANADA

920-129

DATE OF MANUFACTURE
2019 ○ 2020 ○ 2021 ○ 2022 ○ 2023 ○
JAN ☐ FEB ☐ MAR ☐ APR ☐ MAY ☐ JUN ☐ JUL ☐ AUG ☐ SEPT ☐ OCT ☐ NOV ☐ DEC ☐

Unit Dimensions

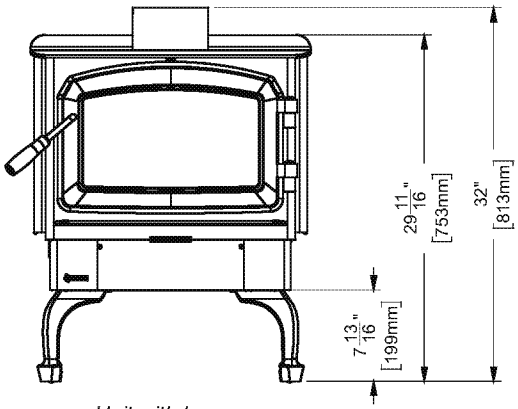

Unit with legs

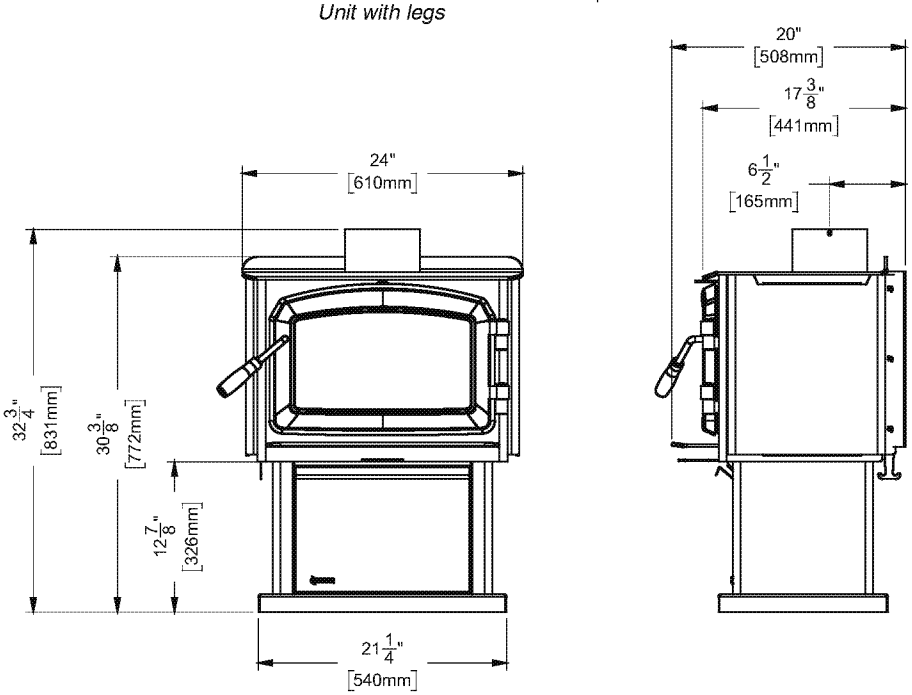

Unit with pedestal

Outside Air Dimensions

with pedestal

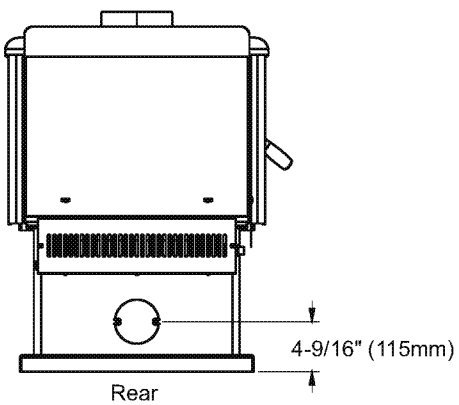

with bottom heat shield + legs

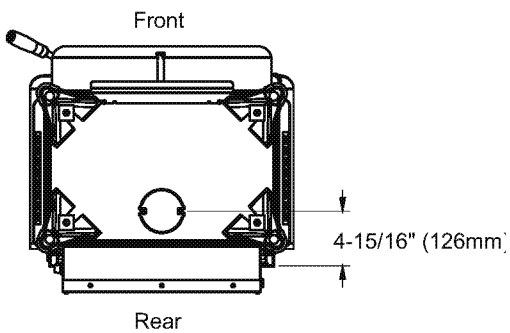

installation

1. Please read this entire manual before you install and use your new woodstove. Failure to follow instructions may result in property damage, bodily injury or even death. Be aware that local Codes and Regulations may override some items in this manual. Check with your local inspector.

2. Select a position for your Regency Stove. Consult the minimum clearance chart for your model and set the stove in place. For installation use listed double wall connector systems only.

3. To insure vertical alignment, suspend a plumb bob from the ceiling over the exact center of your stove flue and mark a spot on the ceiling to indicate the center of the chimney.

4. Check that the area above the ceiling is clear for cutting. Re-confirm the clearance from the stove to combustibles to insure that they are within the prescribed limits.

5. This woodstove must be connected to a UL 103 HT (ULC S629) listed chimney or a code approved masonry chimney with a flue liner.

   Space heater is to be connected to a factory built chimney conforming to CAN/ULC-5629 standard for 650C factory built chimneys. The chimney requirement is 6", refer to appropriate sections in this manual for specifics.

6. Install chimney according to chimney manufacturers instructions. The performance of your woodstove is governed to a very large part by the chimney system. Too short a chimney can cause difficult start-up, dirty glass, back smoking when door is open, and even reduced heat output.

CAUTION:
Do not alter or makeshift chimney or install. Install as per Manual.

Too tall a chimney may prompt excessive draft which can result in very short burn times and excessive heat output. The use of an inexpensive flue pipe damper may be helpful in reducing excessive draft.

CAUTION: The chimney should be the same size as the 6" flue outlet on the stove. The chimney must be listed as suitable for use with solid fuels. For other types of chimneys check with your local building code officials. Do not confuse a chimney with a type "B" Venting System used for gas appliances as suitable for a wood burning appliance. For Mobile Home installations refer to that section within this manual.

7. Mark the location of the pedestal base or legs on the floor, then move the stove aside and mark the position of the floor protector.

8. The floor protector must be of non-combustible material and must extend 16" (406mm) (USA)in front of the door opening and 8" (203mm) to the sides and rear of the unit. Some areas may require a larger size floor protector. See your local inspector. For outside air installation refer to Mobile Home installation instructions within this manual.

NOTE: In Canada, floor protection must extend 18" (450mm) to the front and 8" (203mm) to each side and back of the stove.

9. When the floor protection is complete, position the stove with the flue collar centered under the installed chimney.

Room Air - Important

For installation using room air for combustion, remove knockout from the pedestal.
Mobile home installations require the use of outside air.
Fresh air is important - if heater is starved for air caused by exhaust fans or icing, the unit will not operate properly. Adequate air is required.

On pedestal units there are two locations where outside air may be adapted to the unit. If using the bottom of the pedestal, do not remove knockout from the rear of the pedestal. Only remove rear knockout if outside air will be brought in from the rear.

Note: Once the knockout is removed there are two tabs remaining. Bend both tabs out for ease of installation of outside air kit.

10. In areas with frequent seismic activity, Regency recommends that your unit is secured to the floor by using the bolt down holes inside the pedestal (the same ones used in Mobile Home installations).

11. For residential installations 6" (single wall OK) double wall chimney, the chimney connector must be at least 24 gauge steel. Do not use galvanized pipe. For Mobile Home installation refer to the Mobile Home installation instructions within this manual.

12. **DO NOT CONNECT THIS UNIT TO A CHIMNEY SERVING ANOTHER APPLIANCE.**

13. A chimney connector cannot pass through an attic or roof space, closet or similar concealed space, or a floor, ceiling, wall or partition of combustible construction. In Canada, if passage through a wall, or partition of combustible construction is desired, the installation shall conform to CAN/CSA-B365, Installation Code for Solid-Fuel-Burning Appliances and Equipment.

14. Your Regency Woodstove is not to be connected to any air distribution duct.

IMPORTANT:
During the first few fires, a white film may develop on the glass front as part of the curing process. **The glass should be cleaned** or the film will bake on and become very difficult to remove. Use a non-abrasive cleaner and **NEVER** clean the glass while it is hot.

Modular Installation Options -WARNING: ONLY USE SPECIFIED COMPONENTS.

The following items are required when assembling your Regency Stove. F1150 unit - the Rear Heat Deflector is supplied with the stove, but if you choose not to use it you must use the Airmate instead.

Modular Part	See the Minimum Clearance to Combustible Materials chart in the Installation section of this manual.
F1150 Airmate OR Rear Heat Deflector	Convection heat with Airmate vs. Radiant Heat with Rear Heat Deflector. The Airmate pushes heat forward out into the room, the Rear Heat Deflector deflects the heat upward. Refer to the Installation sections within this manual.
OPTIONS:	
Blower/Fan	Adding the blower will increase the area heated by the stove, it can move warm air beyond the room where the stove.
Ash Drawer Kit	Adding the Ash Drawer Kit makes cleaning ashes out of the stove easier and cleaner (refer to Bottom Shield Ash Drawer Kit, Installation section).
Airmate	The Airmate pushes heat forward out into the room.
Outside Air Kit	Draw combustion air from the outside of dwelling.
Bottom heat shield + legs	Used instead of pedestal.
Pedestal	Used instead of heat shield and legs.
Mobile Home Kit for Canada	The Mobile Kit ensures direct connection to the outside for positive air flow.

ED_005996_00000513-00190

Stove Assembly Prior to Installation

The F1150 unit requires the pedestal (or heat shield and legs) to be attached to the base. The F1150 stove requires either the Airmate or Rear Heat Deflector on top of the stove. Clearances to combustible materials vary depending on whether the airmate or rear heat deflector is installed, so be sure to check the Minimum Clearances, Installation section.

Airmate Assembly for F1150

1. The airmate sits on top of the stove with the slots in the sides fitting over the curved deflector on the rear stove top. See diagram 1. Discard the Rear Heat Deflector that is supplied with the unit, it is not required if the airmate is installed.

2. Center the airmate and push it forward to the front of the stove. The back of the airmate should be level with the back and sides of the rear heat shield. See Diagrams 2 & 3.

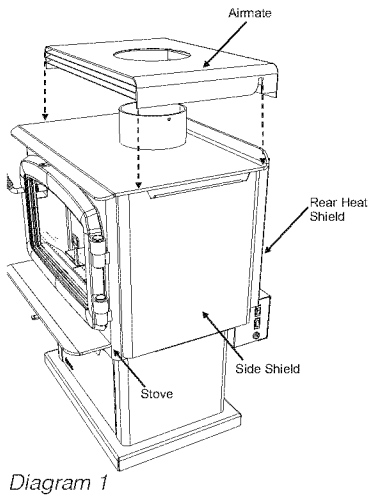

Diagram 1

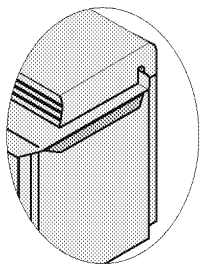

Diagram 2

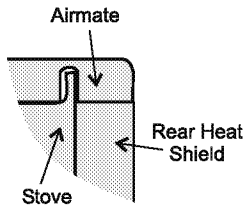

Diagram 3

Rear Heat Deflector Assembly for F1150

The rear heat deflector is supplied with the stove and must be installed unless the optional airmate has been selected. It stops the heat radiated from the flue collar from overheating the rear wall. The rear heat deflector is installed on top of the rear heat shield, as shown in Diagram 4.

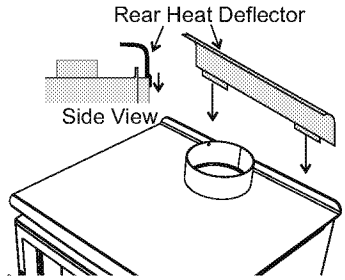

Diagram 4

Side Shield Adjustment

The left and right side shields are lowered for shipping and handling. It allows for a handhold on the top of the stove. Before placing the stove in its final position, the side shields must be raised.

Loosen the screws on the rear on the stove (3 per side), slide the side panel up as far as possible and then secure by tightening the screws.

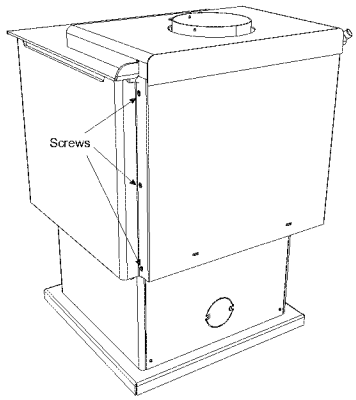

Pedestal Assembly Installation

1. For easier assembly, tip the stove on its back (onto a soft surface to prevent scratching) and remove the front cover.

   Hint: If you have chosen the Ash Drawer option, remove the ash dump cover plates before attaching the pedestal (refer to the Ashdrawer Kit Installation section).

2. Important: Remove the blanking plate if:
   a) you are not installing outside combustion air or
   b) outside air is to be brought in from the rear of the stove (see below).

3. Using the 4 supplied 5/16" bolts in the underside of the stove, insert the bolts loosely onto the threads located at all 4 corners of the base of the unit. Align the holes in the corners of the pedestal top with the corresponding bolts in the base of the stove. Tighten each bolt from inside the pedestal.

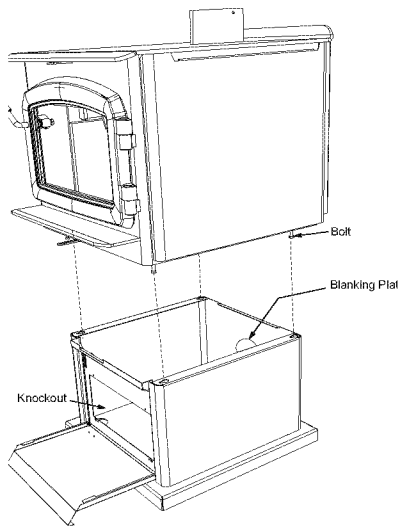

Shown with Classic door

Logo Installation

1. Push the Regency logo into the two holes in the front bottom left corner of the pedestal cover plate.

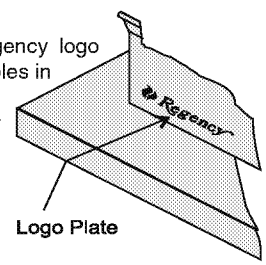

Note: Any paint touch up should be done prior to placing logo on pedestal.

2. If not using ash drawer, then the front cover must remain in place. If using ash drawer, then remove the front cover.

Bottom Heat Shield and Legs Installation

The instructions below apply to the painted cast leg. It will be easier to attach the legs to the stove if the stove is tipped on its back (preferably on a soft surface to prevent scratching). Ensure to be extremely careful when tipping stove.

Important: Prior to installing the bottom heat shield, remove the 4 inch blanking plate. See below.
This must be removed for combustion air to enter the appliance.

1. Remove the bolts from underside of the base of the pedestal (if installed) and discard. Also remove cover plate and put to the side.

2. Line up the heat shield with the bottom of the unit.

3. Start threading the bolt and washer (washers may be square/round) (supplied with the bottom shield) for about 1/4 of the way through the leg with the washers being underneath the legs. Ensure that the legs are properly aligned with heat shield and tighten the bolts.

4. Level the stove by adjusting the levelling bolts in the bottom of each leg.

5. Reinstall cover plate if not using ash drawer option.

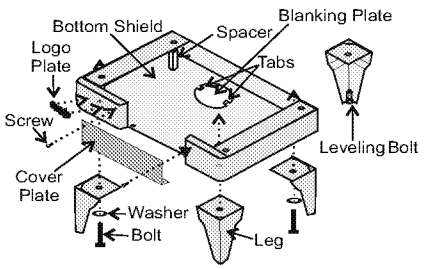

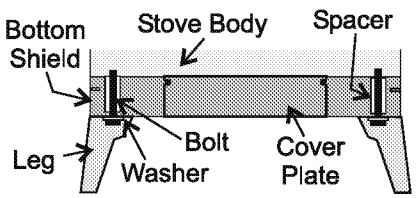

6. Install logo plate onto heat shield by placing in 2 holes as shown in diagram.

If you are installing outside combustion air, bend the tabs out 90 degrees. Pipe fresh air into the bottom shield by using a minimum 4" duct pipe with a mesh grill at the outside termination. Attach the pipe to the 2 tabs with screws.

Minimum Clearance to Combustible Materials

Please read the section below carefully as clearances depend on whether single wall or double wall pipe is installed on the stove.
Measurements "From Unit" are from the top plate of the stove to a side wall or to a corner, and from the rear heat shield to a back wall.

Clearances may only be reduced by means approved by the regulatory authority.

Note: Minimum ceiling height - 83" (2108mm)

Note: This clearance is also required for air space between the appliance and wall/ceiling.

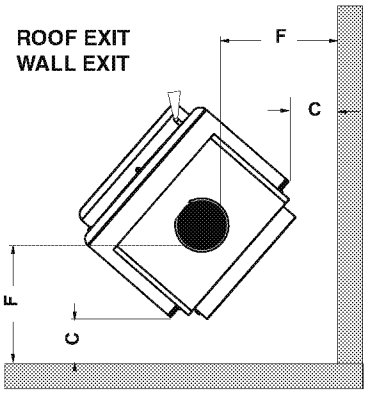

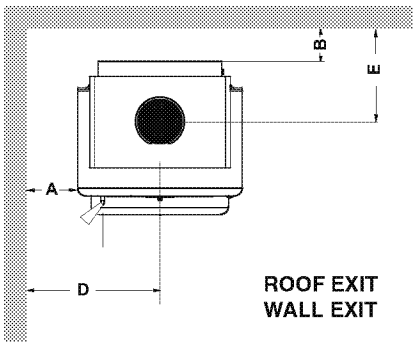

NOTE: Be aware that local Codes and Regulations may override some clearances listed in this manual. Check with your local inspector.

NOTE: Clearances to combustibles are for the safety of the property. To avoid overheating and damaging the appliance these clearances should be maintained for non-combustibles also.

Residential Installation "C" Vent (Single Wall Pipe)

		A	B	C	D	E	F
F1150	with Airmate or Rear Deflector	13" 330mm	10-1/2" 267mm	9" 229mm	25" 635mm	17-1/16" 433mm	21" 532mm

Residential Close Clearance (To be installed with required pipe components) Listed Double Wall Pipe

When the stove is installed as a close clearance residential unit, a listed double wall connector is required from the stove collar to the ceiling level.

		A	B	C	D	E	F
F1150	with Airmate or Rear Deflector	11" 279mm	5" 127mm	5" 127mm	23" 584mm	11-9/16" 294mm	17" 432mm

Mobile Home Close Clearance (To be installed with required pipe components) Listed Double Wall Pipe

When the stove is installed as a close clearance residential unit, a listed double wall connector is required from the stove collar to the ceiling level.
Refer to Mobile Home Installation in this manual.

		A	B	C	D	E	F
F1150	with Airmate or Rear Deflector	11" 279mm	5" 127mm	5" 127mm	23" 584mm	11-9/16" 294mm	17" 432mm

Minimum Alcove Clearance and Clearance to Combustible Materials

The Regency Freestanding models have been alcove approved and must be installed with a listed double wall connector to the ceiling level. Single wall pipe (C Vent) is not approved for alcoves.

Note: Minimum alcove ceiling height - 83" (2108mm)
Maximum depth of alcove - 36" (914mm)

NOTE: This clearance is also required for air space between the appliance and wall/ ceiling.

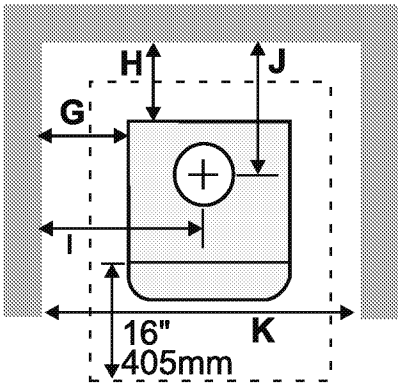

Unit	From Unit		From Flue Center-Line		From Wall
	G	H	I	J	K
F1150 with Airmate or Rear Deflector	11" (279mm)	5" (127mm)	23" (584mm)	11-5/8" (295mm)	46" (1168mm)

Floor Protection (Ember Protection Only Required)

A combustible floor must be protected by a non-combustible material (like tile, concrete board, or certified to UL-1618 Type 1 (or as defined by local codes).

Canada: Beneath the heater and extending to at least 18" (457mm) on the fuel loading side and at least 8" on the sides and back.

USA: Beneath the heater and extending to at least 16" (405mm) beyond the fuel loading side and ash removal opening and at least 8" (203mm) on the sides and back and under the chimney connector extending 2" (51mm) beyond each side for horizontal applications.

Where the appliance is installed less than 8" from a rear wall, the ember pad only needs to extend to the base of the wall based on the clearances noted in this manual.

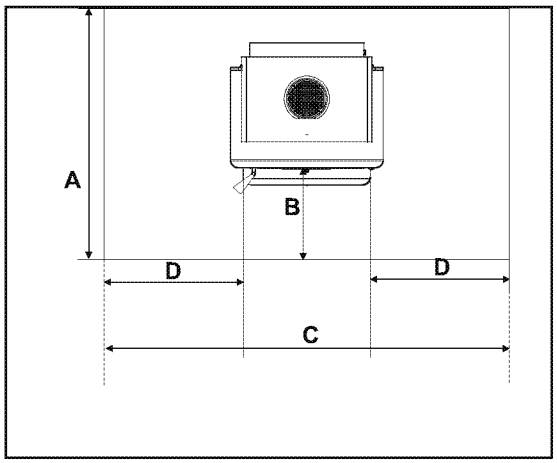

Minimum Overall Depth of Floor Protector					
Unit		Hearth Depth	Edge of Fuel door opening to edge of hearth	Hearth Width	Edge of Fuel Door Opening
		A	B	C	D
F1150	Canada	42" (1067mm)	18" (457mm)	33-11/16" (932mm)	8" (203mm)
	USA	40" (1016mm)	16" (406mm)	33-11/16" (932mm)	8" (203mm)

Floor Protection (Corner Installation)

A combustible floor must be protected by non-combustible material (like tile, concrete board, or certified to UL-1618 or as defined by local codes) extending beneath the heater and a minimum of 8" (203mm) from each side and minimum 16" (406mm)** from the front face of the stove and minimum 6" (152mm)** (or the rear clearance to combustibles whichever is smaller) from the rear of the stove.

When installed with horizontal venting, non-combustible floor protection must beneath the flue pipe and extend 2" (51mm) beyond each side.

Minimum Overall Width (X) of Floor Protector for all installations:

Stove	F1150	33-11/16"(856mm)

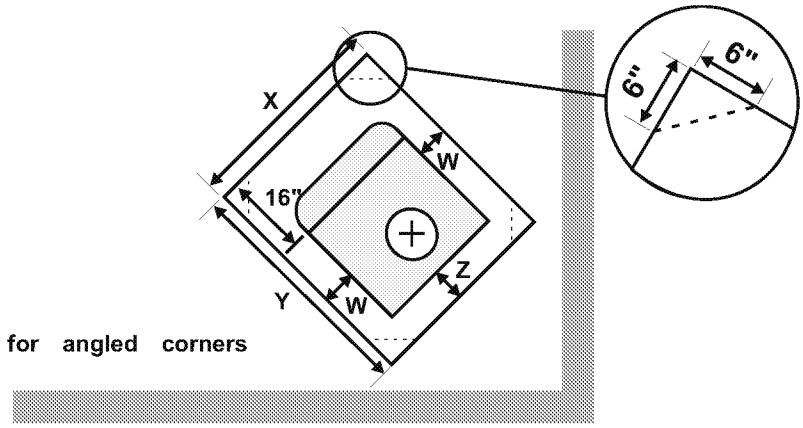

**NOTE: In Canada, floor protection must extend 18" (457mm) to the front and 8" (203mm) to back of the stove.

Minimum Overall Depth (Y) of Floor Protector			
Unit	Residential "C" Vent		From Edge of Fuel Door Opening
	Y	Z	W
F1150	Canada - 42" (1067mm) USA - 40" (1016mm)	**6" (152mm)	8" (203mm)

Minimum Overall Depth (Y) of Floor Protector - Corner Hearth Reference only when hearth pad is installed to rear wall at minimum pipe clearances.				
	Hearth Depth			
F1150	L	M	N	O
Residential Installation "C" Vent (Single Wall)				
Canada	33-11/16" (856mm)	57-3/16" (1453mm)	48-1/16" (1221mm)	24-1/4" (616mm)
USA	33-11/16" (856mm)	55-3/16" (1402mm)	46-11/16 (1186mm)	22-7/8" (581mm)
Residential Close Clearance (To be installed with required pipe components)				
Canada	33-11/16" (856mm)	51-1/2" (1308mm)	44-1/16" (1119mm)	20-1/4" (514mm)
USA	33-11/16" (856mm)	49-1/2" (1257mm)	42-11/16" (1084mm)	18-7/8" (479mm)

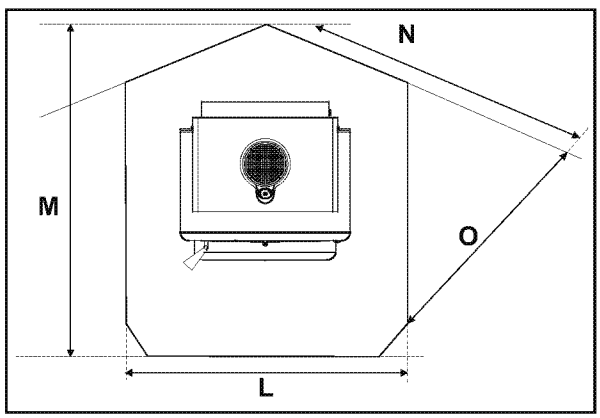

This stove may be connected to a lined masonry chimney or a listed factory built chimney suitable for use with solid fuels and conforming to ULC629 in Canada or UL-103HT in the USA. Do not connect it to a chimney serving another appliance. To do so will affect the safe operation of both appliances, and will void the stove warranty. You must comply with the local authority having jurisdiction and/or in Canada, CSA installation standard B365-M87.

The chimney connector must be 6" diameter, 24 MSG Black/Blue steel. Do not use aluminum or galvanized steel, they cannot properly withstand the extreme temperatures of a wood fire. The chimney connector between the stove and the chimney should be as short and direct as possible.

The chimney connector must be attached to either an approved masonry chimney or one of the listed factory built chimneys suitable for use with solid wood fuel. All joints must be tight and fastened with sheet metal screws.

⚠ WARNING

THE CHIMNEY CONNECTOR IS TO BE USED ONLY WITHIN THE ROOM, BETWEEN THE STOVE AND CEILING/ WALL. NEVER USE A CHIMNEY CONNECTOR TO PASS THROUGH AN ATTIC OR ROOF SPACE, CLOSET OR SIMILAR CONCEALED SPACE, OR A FLOOR, OR CEILING. AN EFFECTIVE VAPOR BARRIER MUST BE MAINTAINED AT THE LOCATION WHERE THE CHIMNEY OR COMPONENT PENETRATES TO THE EXTERIOR OF THE STRUCTURE. ALWAYS MAINTAIN THE MINIMUM CLEARANCES TO COMBUSTIBLES AS REQUIRED BY THE APPLICABLE BUILDING CODES.

Step by Step Chimney and Connector Installation

Note: These are a generic set of chimney installation instructions. Always follow the manufacturers own instructions explicitly. Check the Minimum Recommended Flue Heights section (Table 1).

1. With your location already established, cut and frame the roof hole. It is recommended that no ceiling support member be cut for chimney and support box installation. If it is necessary to cut them, the members must be made structurally sound.

2. Install radiant shield and support from above.

3. Stack the insulated pipe onto your finish support to a minimum height of 3 feet above the roof penetration, or 2 feet above any point within 10 feet measured horizontally. There must be at least 3 feet of chimney above the roof level.

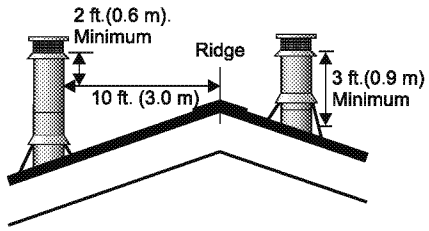

Note: Increasing the chimney height above this minimum level will sometimes help your unit to "breathe" better by allowing a greater draft to be created. This greater draft can decrease problems such as, difficult start-ups, back-smoking when door is open, and dirty glass. It might be sufficient to initially try with the minimum required height, and then if problems do arise add additional height at a later date.

4. Slide the roof flashing over your chimney and seal the flashing to the roof with roofing compound. Secure the flashing to your roof with nails or screws.

5. Place the storm collar over the flashing, sealing the joints with a silicone caulking.

6. Fasten the raincap with spark screens (if required) to the top of your chimney.

7. For optimum efficiency when installing into a masonry chimney, size accordingly, i.e. the 6" (152mm) flue dia. is 28.28 sq.in.

8. To complete your chimney installation, install the double wall connector pipe from the stove's flue collar to the chimney support device.

9. If you are using a horizontal connector, the chimney connector should be as high as possible while still maintaining the 18" (457mm) minimum distance from the horizontal connector to the ceiling.

10. **NOTE: Residential Close Clearance and Alcove installations require a listed double wall connector from the stove collar to the ceiling level.**

The diagrams below illustrate one way to install your unit into a standard ceiling or with a horizontal connector. Check with your dealer or installer for information on other options available to you.

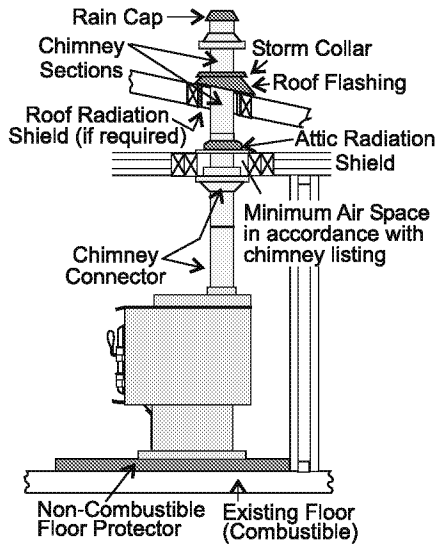

Standard Ceiling Installation

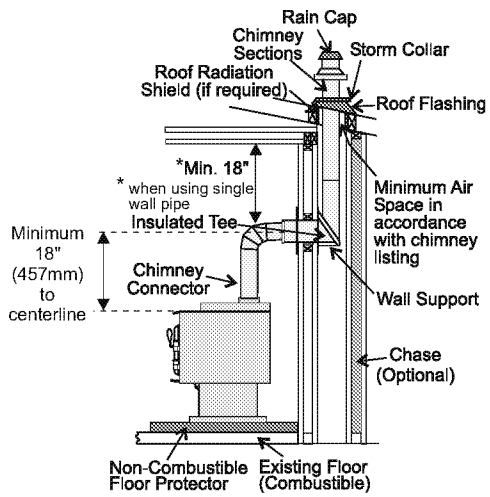

Horizontal Installation

Masonry Chimney

Ensure that a masonry chimney meets the minimum standards of the National Fire Protection Association (NFPA) by having it inspected by a professional. Make sure there are no cracks, loose mortar or other signs of deterioration and blockage. Have the chimney cleaned before the stove is installed and operated. When connecting the stove through a combustible wall to a masonry chimney, special methods are needed.

Ensure that an effective vapour barrier at the location where the chimney or other component penetrates to the exterior of the structure.

When referencing installation or connection to masonry fireplaces or chimneys, the masonry construction must or shall be code complying.

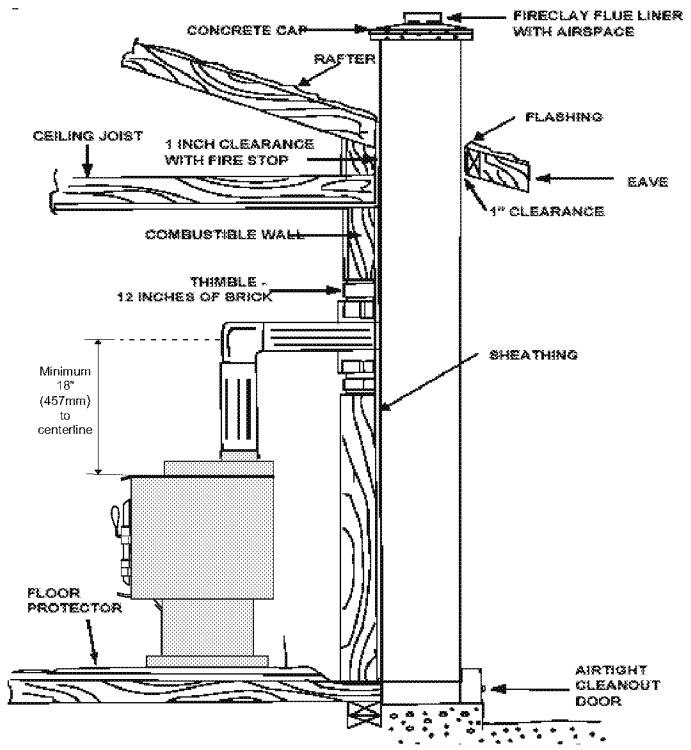

Masonry Fireplace

There are listed kits available to connect a stove to a masonry fireplace. The kit is an adapter that is installed at the location of the fireplace damper. The existing damper may have to be removed to allow installation.

Ensure that an effective vapour barrier at the location where the chimney or other component penetrates to the exterior of the structure.

This unit is designed to use either a 5.5" (140mm) or 6" (152mm) flue liner only in the confines of the masonry chimney as shown.

When referencing installation or connection to masonry fireplaces or chimneys, the masonry construction must or shall be code complying.

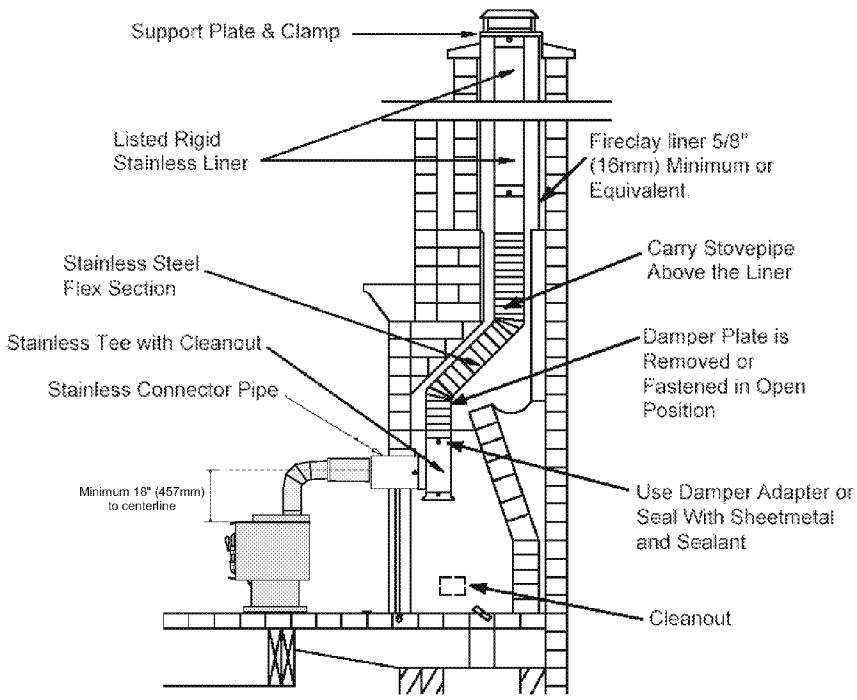

Factory Built Chimney

When a metal prefabricated chimney is used, the manufacturer's installation instructions must be followed. You must also purchase and install the ceiling support package or wall pass-through and "T" section package, firestops (where needed), insulation shield, roof flashing, chimney cap, etc. Maintain proper clearance to the structure as recommended by the manufacturer. The chimney must be the required height above the roof or other obstructions for safety and proper draft operation. The space heater is to be connected to a factory-built chimney conforming to CAN/ULC-S629, Standard for 650°C Factory-Built Chimneys.

Combustible Wall Chimney Connector Pass-throughs

Method A: 12" (304.8 mm) Clearance to Combustible Wall Member:

Using a minimum thickness 3.5" (89 mm) brick and a 5/8" (15.9 mm) minimum wall thickness clay liner, construct a wall pass-through. The clay liner must conform to ASTM C315 (Standard Specification for Clay Fire Linings) or its equivalent. Keep a minimum of 12" (304.8 mm) of brick masonry between the clay liner and wall combustibles. The clay liner shall run from the brick masonry outer surface to the inner surface of the chimney flue liner but not past the inner surface. Firmly grout or cement the clay liner in place to the chimney flue liner.

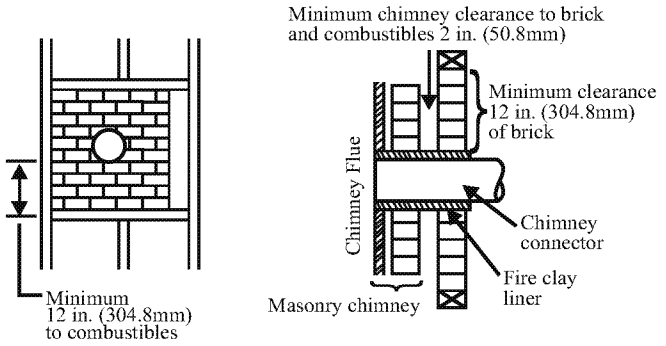

Method B: 9" (228.6 mm) Clearance to Combustible Wall Member:

Using a 6" (152.4 mm) inside diameter, listed, factory-built Solid-Pak chimney section with insulation of 1" (25.4 mm) or more, build a wall pass-through with a minimum 9" (228.6 mm) air space between the outer wall of the chimney length and wall combustibles. Use sheet metal supports fastened securely to wall surfaces on all sides, to maintain the 9" (228.6 mm) air space. When fastening supports to chimney length, do not penetrate the chimney liner (the inside wall of the Solid-Pak chimney). The inner end of the Solid-Pak chimney section shall be flush with the inside of the masonry chimney flue, and sealed with a non-water soluble refractory cement. Use this cement to also seal to the brick masonry penetration.

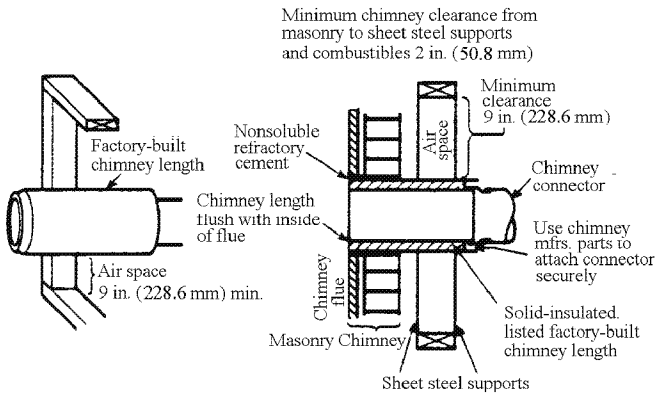

Method C: 6" (152.4 mm) Clearance to Combustible Wall Member:

Starting with a minimum 24 gage (.024" [.61 mm]) 6" (152.4 mm) metal chimney connector, and a minimum 24 gage ventilated wall thimble which has two air channels of 1" (25.4 mm) each, construct a wall pass-through. There shall be a minimum 6" (152.4 mm) separation area containing fiberglass insulation, from the outer surface of the wall thimble to wall combustibles. Support the wall thimble, and cover its opening with a 24-gage minimum sheet metal support. Maintain the 6" (152.4 mm) space. There should also be a support sized to fit and hold the metal chimney connector. See that the supports are fastened securely to wall surfaces on all sides. Make sure fasteners used to secure the metal chimney connector do not penetrate chimney flue liner.

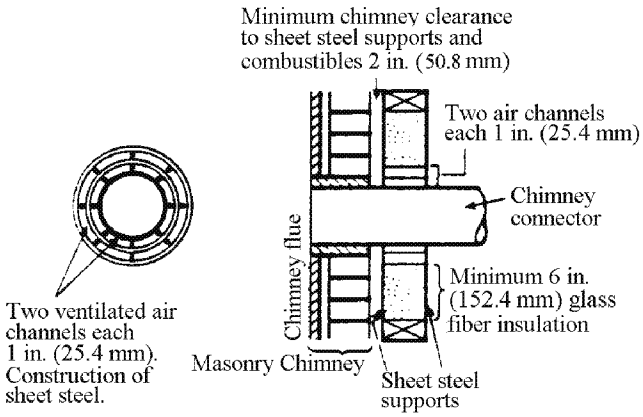

Method D: 2" (50.8 mm) Clearance to Combustible Wall Member:

Start with a solid-pak listed factory built chimney section at least 12" (304 mm) long, with insulation of 1" (25.4 mm) or more, and an inside diameter of 6" (2 inches [51 mm] larger than the 6" [152.4 mm] chimney connector). Use this as a pass-through for a minimum 24-gage single wall steel chimney connector. Keep solid-pak section concentric with and spaced 1" (25.4 mm) off the chimney connector by way of sheet metal support plates at both ends of chimney section. Cover opening with and support chimney section on both sides with 24 gage minimum sheet metal supports. See that the supports are fastened securely to wall surfaces on all sides. Make sure fasteners used to secure the metal chimney connector do not penetrate chimney flue liner.

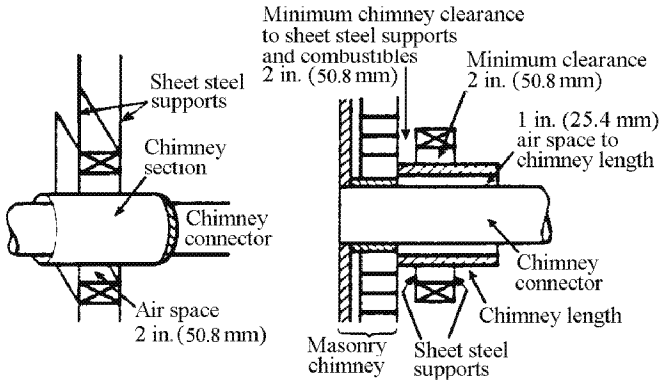

Mobile Home Installation

For Canadian Installations: see Outside Air Kit - Part # 846-502.
There are further requirements when installing this unit into a mobile home in Canada Only.

Once you have properly marked the position of your unit and the floor protection as outlined in the Residential Installation items #1 through #8, a supply of fresh air has to be supplied to your unit.

See Optional Outside Air Kit instructions in this manual.

Place your unit in position and secure it to the floor using two lag bolts 3/8" (10mm) x 3-1/2" (89mm) through the two holes inside the pedestal base. It is important to maintain the structural integrity of the Mobile Home floor, walls and roof when installing your unit.

For Mobile Home units installed in the U.S. the unit must be grounded using a #8 ground wire with approved termination and star washer.

CAUTION: At no time use unlabelled parts, or substitute parts made for another chimney system.

Install as per chimney manufacturer's installation instructions.

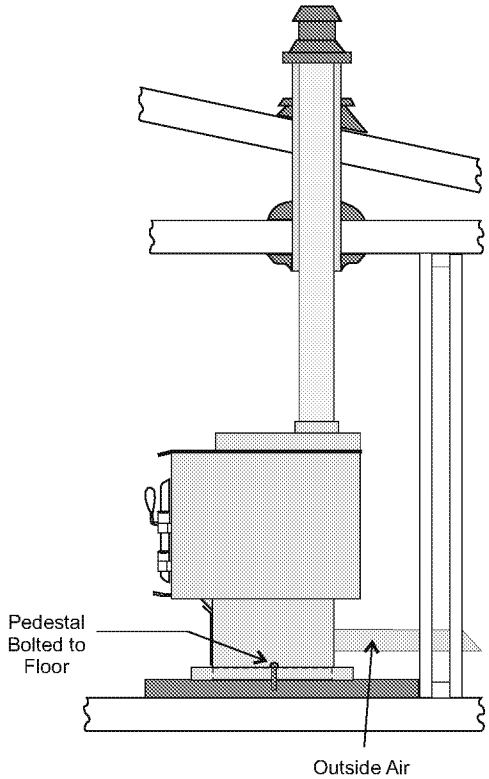

WARNING: Operate only with door fully closed - open feed door to feed fire only.

1. Identify the position of the outside air damper by the orientation of the metal handle that rests outside the galvanized pipe. The metal handle and the damper disc are in line with each other. This means that if the metal handle is in a horizontal position, the damper is flat and fully open.

2. Open the damper fully whenever you start a fire. This will allow the outside air to be drawn in the pedestal base eliminating any potential smoke escaping the stove and entering the room. (Negative air pressure)

In addition to standard installation instructions the following requirements are mandatory for installation in a mobile home.

1. The stove must be permanently bolted to the floor of the Mobile Home using the floor screws provided.

2. The stove must have a permanent outside air source for combustion.

3. The stove must be electrically grounded to the steel chassis of the Mobile Home.

4. A listed double-wall connector chimney system, roof thimble, spark arrestor and roof flashing kit suitable for use in Mobile Homes must be used.

5. If the chimney exits the Mobile Home at a location other than through the roof, and exits at a point 7ft. (2130mm) or less above the ground level on which the Mobile Home is positioned a guard or method of enclosing the chimney shall be fitted at the point of exit for a height up to 7ft. (2130mm).

6. The chimney shall be attached directly to the room heater and shall extend at least 3 ft. (914mm) above the part of the roof through which it passes. The top of the chimney should project at least 2ft. (610mm) above the highest elevation of any part of the Mobile Home within 10 ft. (3048mm) of the chimney.

7. The chimney system shall comply with Local Requirements.

8. Any openings in a chimney guard where required must not permit the entrance of 3/4" (19mm) diameter rod.

9. **CAUTION: THE STRUCTURAL INTEGRITY OF THE MOBILE HOME ROOF, FLOOR, WALLS AND CEILING MUST BE MAINTAINED.**

10. Check any other local building code as other local codes may apply.

11. **WARNING: DO NOT INSTALL IN A SLEEPING ROOM OF A MOBILE HOME.**

12. Use silicone to create an effective vapour barrier at the location where the chimney or other component penetrates to the exterior of the structure.

ED_005996_00000513-00199

Mobile Home Kit - for Canada

Note: The optional ashdrawer cannot be used when using the Mobile Home Kit.

The Mobile Home kit contains:

1 Bottom metal cover - only used when air is drawn from the floor.
1 Flex
1 Collar
1 Mobile home box
1 Square transition box (used when installing bottom heat shield/legs)
Screws

1. Lay unit on its back. Remove two front 7/16 bolts. Loosen rear two 7/16" bolts. See diagram 1.

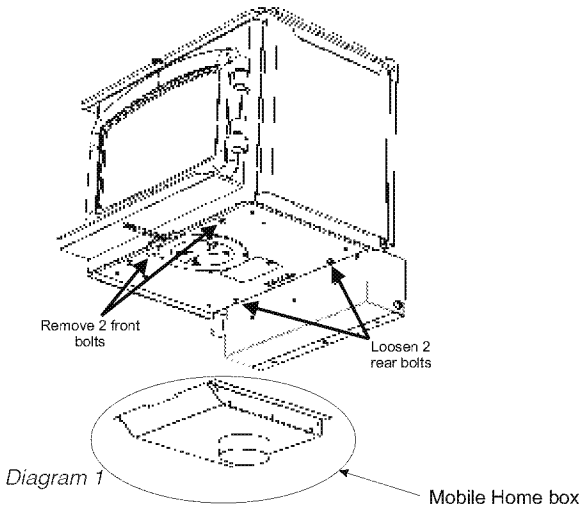

Diagram 1

2. Secure the Mobile Home box to the bottom of the firebox with the 4-7/16" bolts loosened and removed from step 1. See diagram 2.
If using outside air from the rear of the pedestal, follow instructions noted below. If using outside air from the pedestal base, follow instructions from step 10 to 16. For bottom heat shield/legs, follow instructions from step 17 to 22.

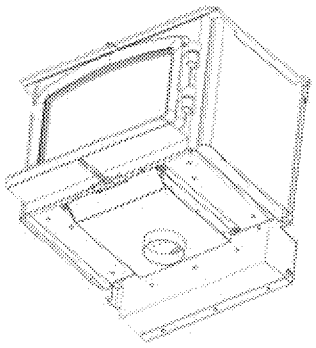

Diagram 2

3. Remove the 4" knock out from the rear pedestal.

4. Install rear collar to the rear pedestal using 4 screws.

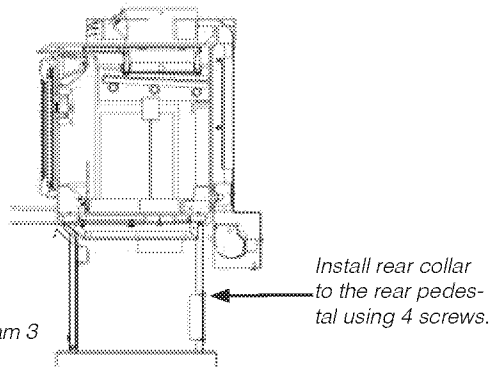

Diagram 3

5. Attach flex to rear pedestal using supplied screws.

6. Bring pedestal base near the base of the firebox and secure flex to Mobile Home box.

7. Secure pedestal base to firebox. See pedestal instructions.

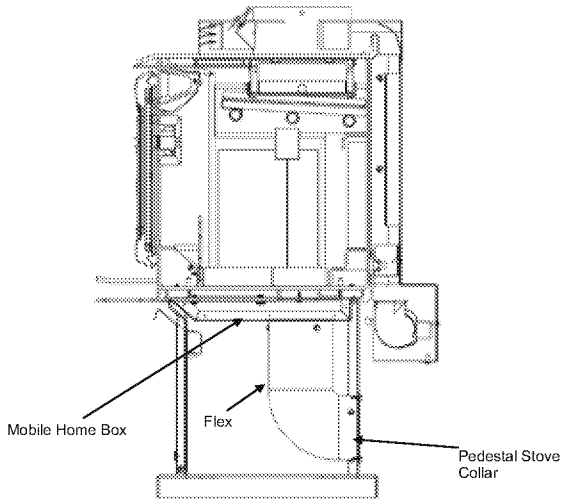

Diagram 4

8. Install blanking plate to the front of the pedestal with 4 screws.

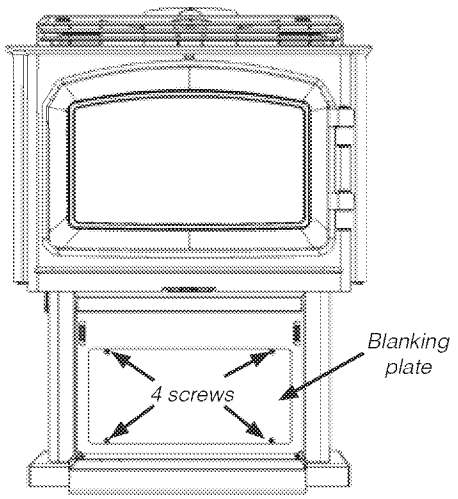

Diagram 5

9. Place unit into position and install the mandatory outside air kit. S «Mobile Home installation» section in this manual.

Installing Outside Air from Pedestal Base

If installing outside air from pedestal base, do not remove knock out from rear of pedestal. This must remain in place.

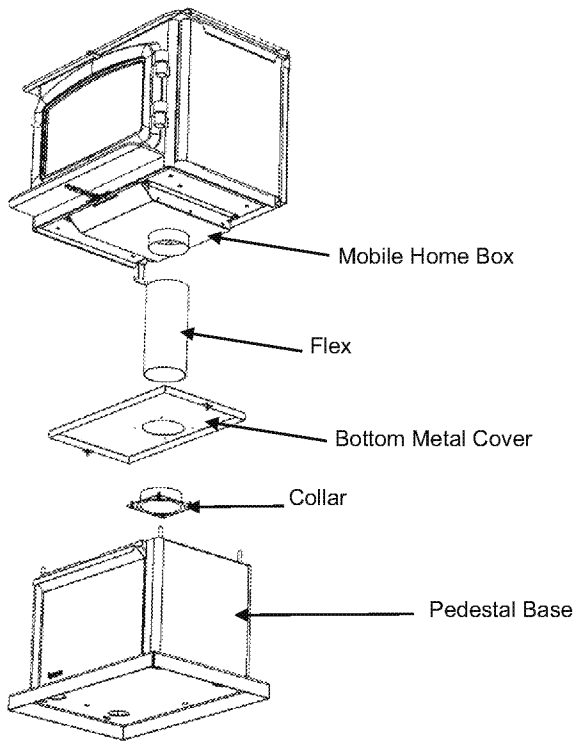

10. Secure collar to base of unit with 4 screws.

11. Install bottom metal cover over collar installed in step 10 and rest cover on pedestal base.

12. Secure flex to collar with supplied screws.

13. Bring pedestal base near the base of the firebox and secure flex to mobile home box with supplied screws.

14. Secure pedestal base to firebox. See pedestal instructions.

15. Install blanking plate to the front of the pedestal with 4 screws. Use picture from step 8.

16. Install the mandatory outside air kit. See «Mobile Home Installation» section in this manual. Place unit into its final position to complete install.

Installing Outside Air Using Bottom Heat Shield/ Legs

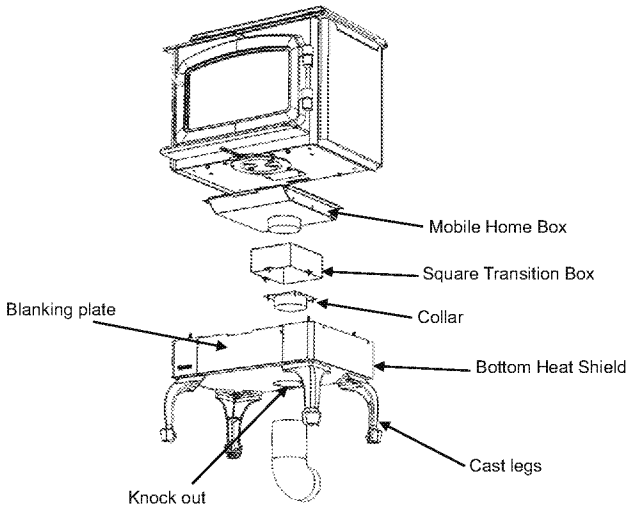

17. Remove knock out from the bottom heat shield and bend tabs left over when the knock out was removed over to the side.

18. Secure collar to base of bottom heat shield as shown with 4 screws.

19. Secure transition box on top of round collar installed in step 18 and secure with 3 screws.

20. Install blanking plate if not already installed.

21. See bottom heat shield/leg instructions.

22. Install the mandatory outside air kit. See «Mobile Home Installation» section in this manual. Place unit into its final position to complete install.

TABLE 1

MINIMUM RECOMMENDED FLUE HEIGHTS IN FEET (Measured from the top of the unit)							
ELEVATION (FT) ABOVE SEA LEVEL	# OF ELBOWS						
	0	2 x 15°	4 x 15°	2 x 30°	4 x 30°	2 x 45°	4 x 45°
0-1000	12.0	13.0	14.0	15.0	18.0	16.0	20.0
1000-2000	12.5	13.5	14.5	15.5	19.0	16.5	21.0
2000-3000	13.0	14.0	15.0	16.0	19.5	17.0	21.5
3000-4000	13.5	14.5	15.5	17.0	20.0	18.0	22.5
4000-5000	14.0	15.0	16.0	17.5	21.0	18.5	23.0
5000-6000	14.5	15.5	17.0	18.0	21.5	19.0	24.0
6000-7000	15.0	16.0	17.5	18.5	22.5	20.0	25.0
7000-8000	15.5	16.5	18.0	19.0	23.0	20.5	25.5
8000-9000	16.0	17.0	18.5	20.0	24.0	21.0	26.5
9000-10000	16.5	17.5	19.0	20.5	24.5	22.0	27.0

NOTE: No more than two offsets (four elbows) allowed. Two 45° elbows equal one 90° elbow.

Draft is the force which moves air from the appliance up through the chimney. The amount of draft in your chimney depends on the length of the chimney, local geography, nearby obstructions and other factors. Too much draft may cause excessive temperatures in the appliance and may cause damage. An uncontrollable burn or excessive temperature indicates excessive draft. Inadequate draft may cause back puffing into the room and plugging of the chimney. Inadequate draft will cause the appliance to leak smoke into the room through appliance and chimney connector joints. Ensure the heater is installed in areas that are not too close to neighbors or in valleys that would cause unhealthy air quality or nuisance conditions.

Recommended Heights For Woodstove Flue

Simple rules on draft. See Table 1.

1) At sea level minimum height is 12' straight.

2) Add the following vertical height to compensate for:
45 deg. elbow = 1 ft.
90 deg. elbow = 2 ft.
"T" = 3 ft.
Each foot of horizontal run = 2 ft.

3) Add 4% overall for each 1000' above sea level.

Example: a)
1-1/2 ft. of horizontal run = 3 ft.
one "T" = 3 ft.
Total Addition (at sea level) = 6 ft.

Example: b)
One 90 deg. elbow = 2 ft.
2 ft. of horizontal run = 4 ft.
one "T" = 3 ft.
Total Addition (at sea level) = 9 ft.

	Recommended Flue Height	
Elevation	**Example a)**	**Example b)**
0'	18'	21'
1000'	18.72'	21.84'
2000'	19.44'	22.68'
5000'	21.60'	25.20'
8000'	23.76'	27.72'

WARNING:
DO NOT INSTALL IN SLEEPING ROOM

CAUTION: The structural integrity of the mobile home floor, wall and ceiling/roof must be maintained.

Optional Outside Air Kit

The Outside Air Kit is an option for Freestanding Stoves. Outside air for combustion can be brought in either through the bottom of the pedestal or through the rear plate of the pedestal.

For both bottom and rear outside air the Pedestal Cover Plate must be installed. Loosen the 4 screws on the rear of the pedestal and slide the cover plate over them. Slide the plate to the left to center it and tighten down the 4 screws.

Damper Installation

NOTE: The damper cannot be installed if attaching outside air to the bottom of the appliance.

Supplied damper allows the combustion air to be closed off when unit is not in operation.

Install the damper within the round pipe in an easily accessible location.

1. Drill a 5/16" hole in the desired location.
2. Insert damper with threaded section out.
3. Install damper handle and secure with wing nut.

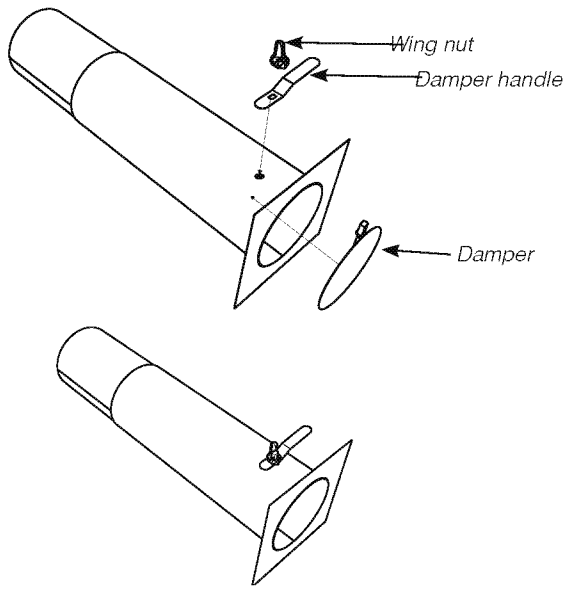

Completed Install

Outside Air Through Pedestal Rear

Remove the blanking plate from the rear of the pedestal and bend the two tabs out 90 degrees. Pipe fresh air into the pedestal area by using a minimum 4" metallic duct pipe with a mesh grill at the outside termination.

Fasten the pipe to the cover plate using the tabs and 2 screws.

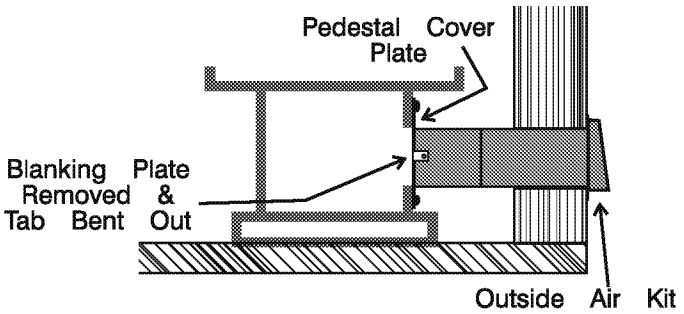

Side View

Outside Air Through Pedestal Bottom

Mark the position of your unit as outlined in the "General Information" and "Clearances to Combustibles" section of the manual. Pipe fresh air into the pedestal area by using a minimum 4" duct pipe with a mesh grill at the outside termination.

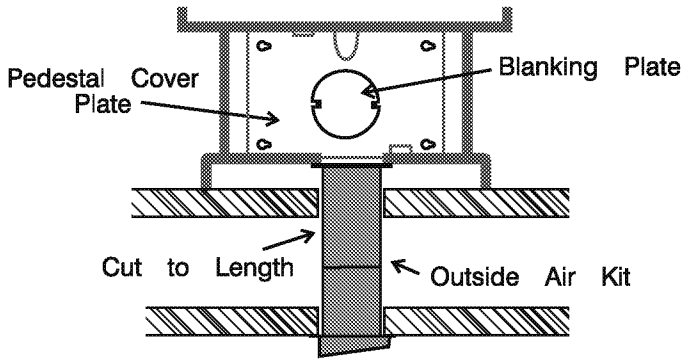

Rear View

Brick Installation

Firebrick is included to extend the life of your stove and radiate heat more evenly. Check to see that all firebricks are in their correct positions and have not become misaligned during shipping. Install all firebricks (if bricks were removed at install) per the diagram below and place in their correct positions.

Do not use a grate.

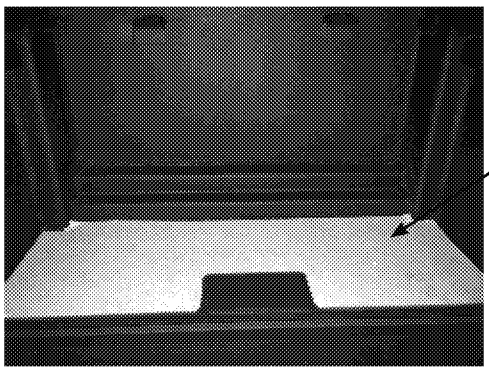

Order of firebrick install:

a) Rear Firebrick
b) Firebox floor - install brick over LyTherm Sheet
c) Right and left side Firebricks

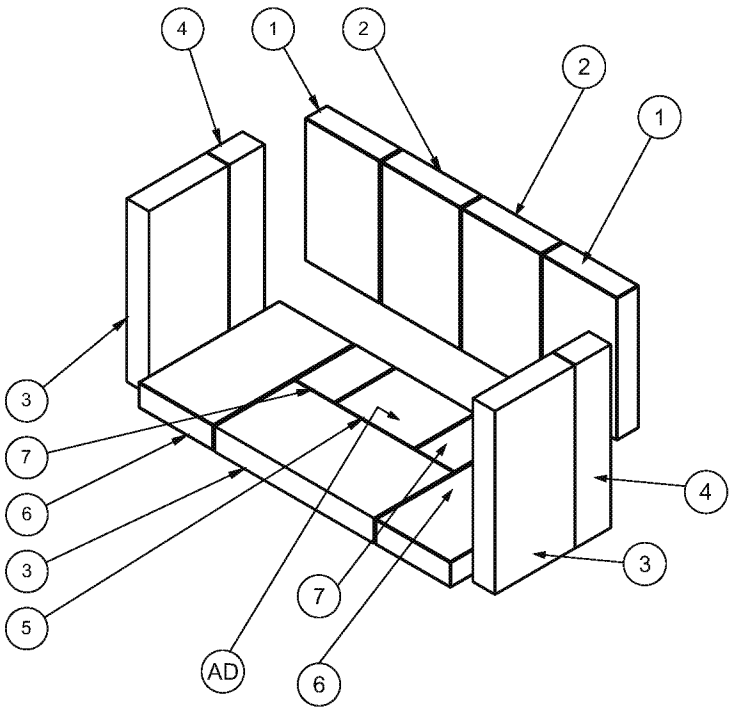

Fire bricks	
#	Size
1	4-1/4" x 7"
2	4-1/2" x 7"
3	9" x 4-1/2"
4	9" x 2"
5	3-1/2" x 4-1/2" (AD)
6	4-1/4" x 8"
7	3-1/2" x 2-1/4"
AD	Ashdump brick

NOTE: The "AD" brick covers the Ash Dump hole that is used if an Ash Drawer Kit is not installed.

Removing Wooden Handle

1. To remove the wooden door handle from unit, firstly locate 7/64" Allen key hole at the bottom of wooden handle.

2. Unscrew 7/64" Allen Key screw counterclockwise. Once the screw is completely loose, remove and drop the handle down off the door handle shaft and replace with new handle.

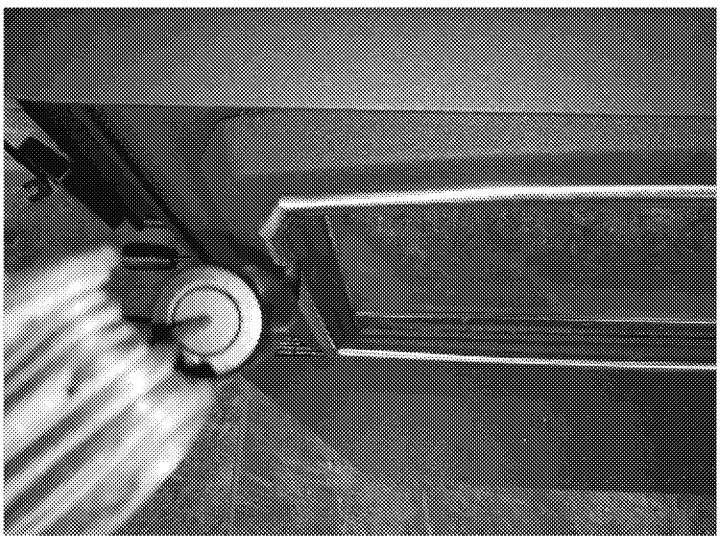

Glass Installation

Your Regency stove is supplied with 5 mm Neoceram ceramic glass that will withstand the highest heat that your unit will produce. In the event that you break your glass by impact, purchase your replacement from an authorized Regency dealer only.

Remove the door from the stove and remove the screws securing the glass retainer. Position the glass in the door, make sure that the glass gasketing will properly seal your unit, and replace the retainer, it should rest on the gasket not the glass. Tighten securely, but do not wrench down on the glass as this may cause the glass to break.

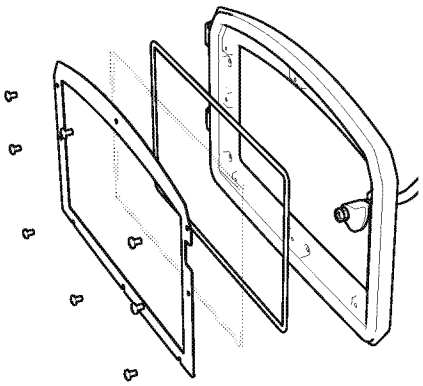

Shown with classic door

Wood Door & Handle Assembly

1. In preparation of installing the door handle, the nuts, cam, washers and spacer must be removed as shown in Diagram 1.

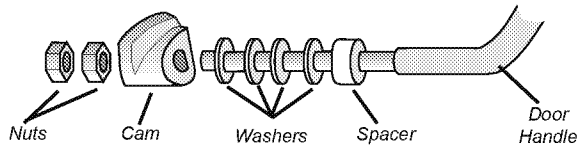

Diagram 1

LATCH ADJUSTMENT

The door latch may require adjustment as the door gasket material compresses over time. Removal of 1 or 2 washers will allow the latch to move closer to the door frame, causing a tighter seal. (Refer to Diagram 1)

2. Place the door onto the hinges and then place the door handle through the opening on the door, as shown in Diagram 2.

   Re-assemble and secure the door handle components in reverse order as removed in step 1, refer to Diagram 1.

3. Put the hinge cover caps on top of hinges to complete the door installation.

Note: The bottom of the door may scrape the ashlip. In this case place the spacers provided on the door hinges of the unit before placing the door.

4. Close door and ensure there is a tight seal. If door is too tight, a washer can be added. If the door is not creating a tight seal, a washer can be removed. Recheck door to ensure there is still a tight seal. Repeat steps if door seal is still not tight until a tight seal has been achieved. The handle should be approximately in the 8 o'clock position when door is fully closed.(Diagram 3)

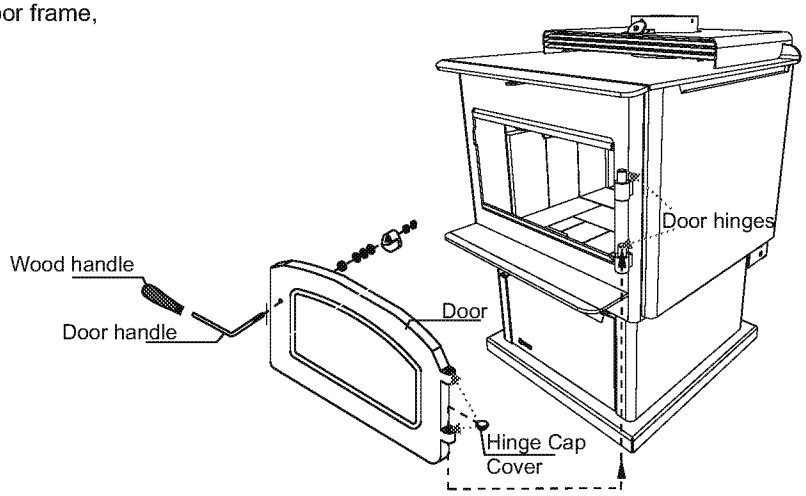

Diagram 2

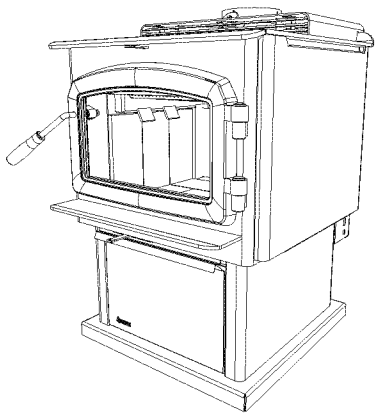

Diagram 3

FAN INSTALLATION (120V FAN)

1. Remove the two screws from the top of the fan housing.
2. Slide the fan up into the rear heat shield.
3. After aligning holes, secure the fan to the rear heat shield using the two screws removed earlier.

Note: The connection cord should not be in contact with any hot surfaces.

WARNING: FAN ASSEMBLY MUST BE DISCONNECTED FROM THE SOURCE OF ELECTRICAL SUPPLY BEFORE ATTEMPTING THE INSTALLATION.

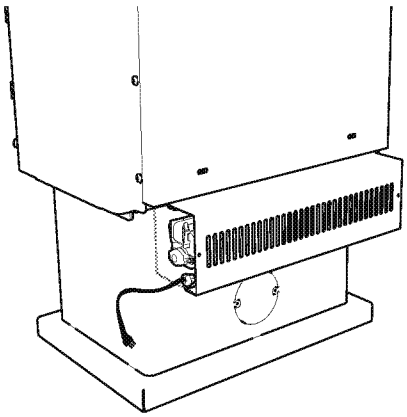

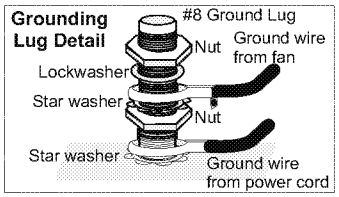

FAN OPERATION

The fan is controlled by a rheostat which allows control of the heat output.

The fan will turn on as the stove has come up to operating temperature. It will also shut the fan system off after the fire has gone out and the unit cooled to below a useful heat output range.

If the fan cycles on and off continuously the thermo switch sensor is not making contact with the stove body. Remove the fan, bend the bracket closer to the stove and re-install the fan.

The fan is to be operated in the <LOW> position when burning in the LOW - MED LOW heat output setting and on <HIGH> when burning in the MED-HIGH settings.

WARNING: Electrical Grounding Instructions
This appliance is equipped with a three pronged (grounding) plug for your protection against shock hazard and should be plugged directly into a properly grounded three-prong receptacle. Do not cut or remove the grounding prong from this plug.

CAUTION: Label all wires prior to disconnection when servicing controls. Wiring errors can cause improper and dangerous operation.

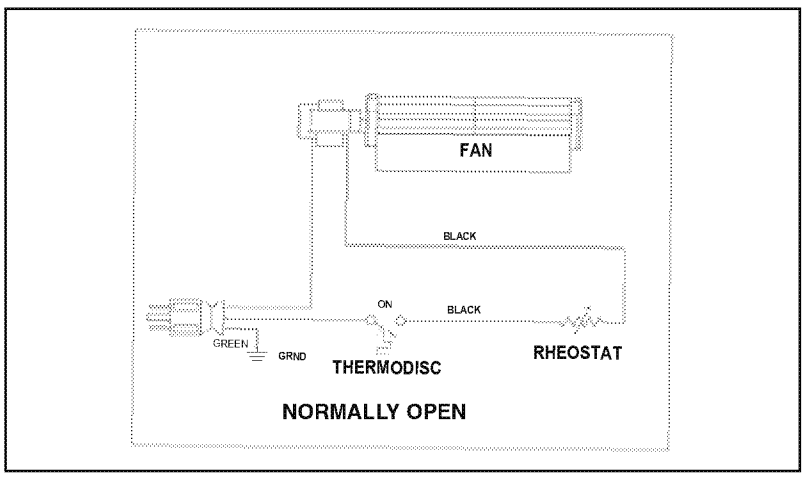

Wiring Diagram

Stainless steel smoke deflector installation

The stainless smoke deflector is located in the upper front area of the firebox. The deflector is held in place with 2 bolts
Prior to the first fire, ensure deflector is seated properly and secured with 2 hand tightened bolts which are accessible from behind the smoke deflector.

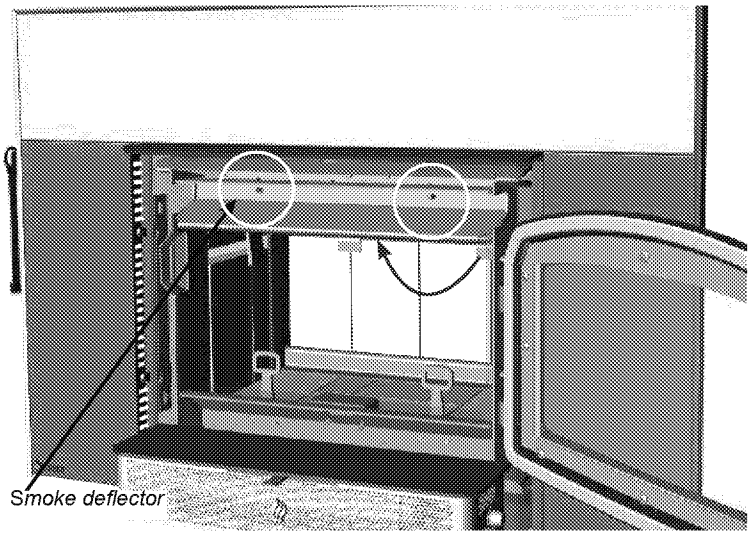

Smoke deflector is installed through the door opening in location shown in Diagram

To replace the deflector, loosen off both bolts and slide deflector downward, push deflector to the back wall of the unit and manoeuver out.
Install new deflector and hand tighten bolts.
Ensure positive location of the deflector prior to hand tightening.

WARNING: Operation of the unit with out proper installation of smoke deflector will void warranty.

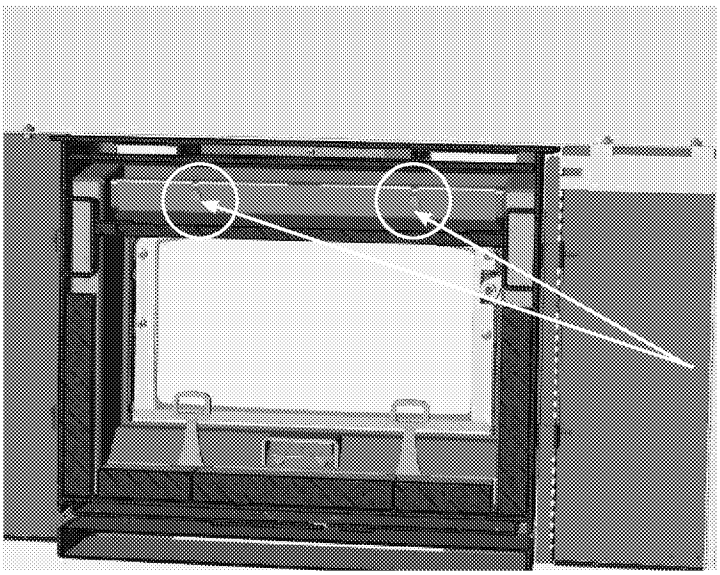

Ensure deflector is seated so bolts are seated at the bottom of the slot before tightening.

Smoke deflector installed with 2 bolts.

Note: *This is a cutaway view from the back of the unit*

Brick Flue Baffle Removal / Installation

The flue baffle system located in the upper area of the firebox is removable to make cleaning your chimney system easier. The brick baffle must be installed prior to your first fire. **Smoke spillage and draft problems may occur if the baffle is improperly positioned.** Check the position of the brick baffle on a occasion as it may get dislodged if too much fuel is forced into the firebox.

Note: Diagrams below are shown with front parts of the body as transparent to clearly show the install of the flue baffle.
It may be easier to complete this procedure if the smoke deflector is removed, if already installed see previous page for removal procedure.

1. Open the unit door.

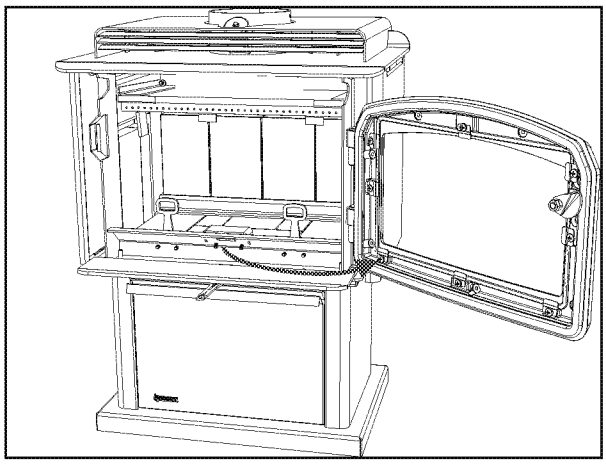

2. Remove front air tube if already installed.

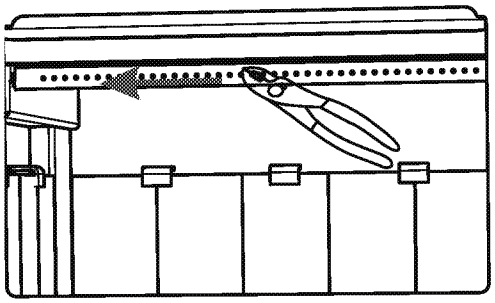

3. Install large centre baffle.

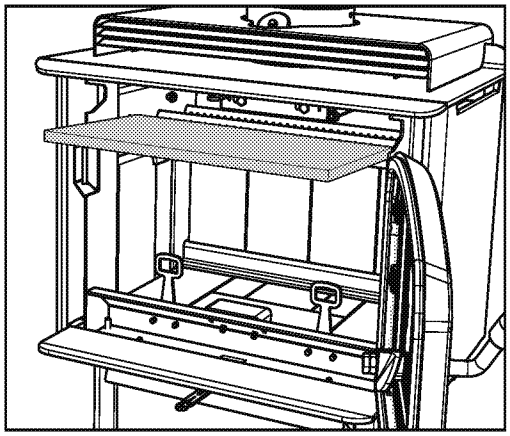

4. Install two smaller baffle pieces on either side.

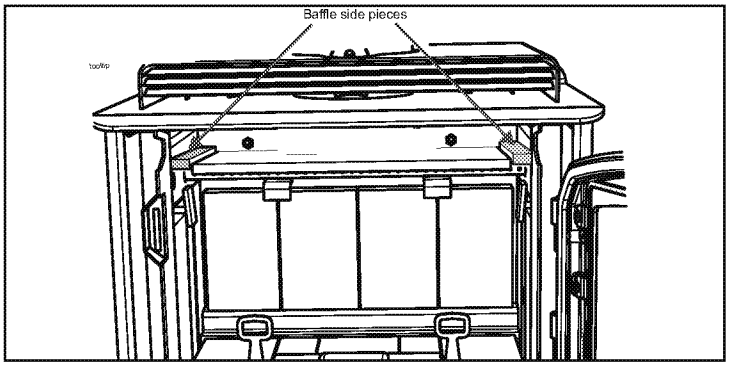

5. Reinstall front air tube.

6. Install baffle brackets on either side by slightly lifting baffles up and placing brackets in between baffles and the front air tube. The brackets will hold the baffles in position.

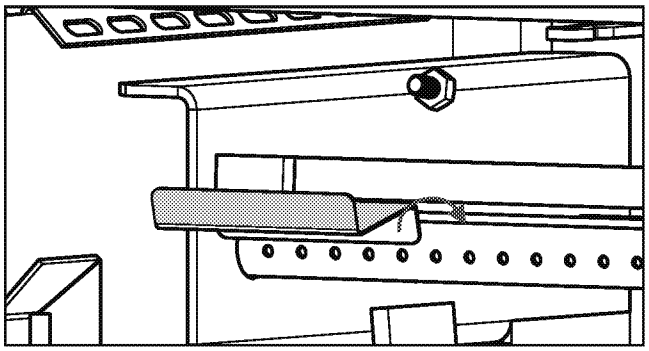

7. Slide left and right baffle cover plates on either side of baffles as shown.

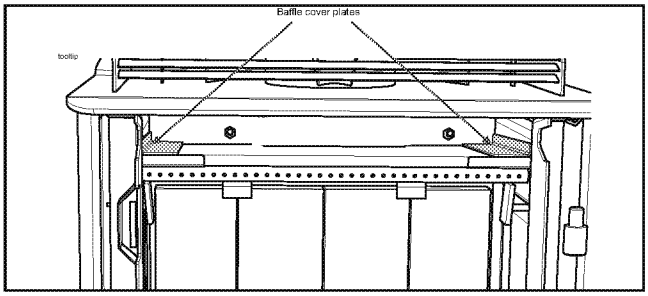

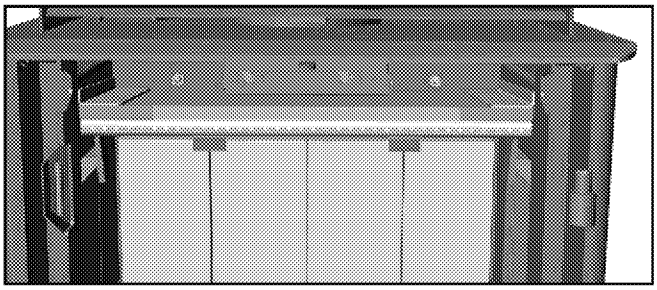

Baffle brackets and cover plates in final position

8. Reinstall smoke deflector.

9. Reverse steps to un-install the baffles.

Seasoned Firewood

Whether you burn wood in a fireplace, stove or insert, good quality firewood is the key to convenience, efficiency and safety. Wet wood and pieces that are not the right size and shape for your wood burner can be frustrating, burn inefficiently and deposit creosote that can fuel a dangerous chimney fire. Good planning, seasoning and storage of the firewood supply are essential to successful wood burning.

- Stack the wood in separate rows in an open location where the summer sun can warm it and breezes can carry away the moisture. Do not stack unseasoned wood tightly in an unvented storage area.
- Do not allow firewood to lie on the ground for more than a couple of days before stacking. Mould and rot can set in quickly.
- Stack the wood up off the ground on poles, lumber rails or pallets.
- The top of the pile can be covered to keep off rain, but do not cover the sides.

Softer woods like pine, spruce and poplar/aspen that is cut, split and stacked properly in the early spring maybe be ready for burning in the fall. Extremely hard woods like oak and maple, and large pieces of firewood, may take a minimum of a full year to dry enough. Drying may also take longer in damp climates

There are a few ways to tell if wood is dry enough to burn efficiently. Use as many indicators as possible to judge the dryness of the firewood your are considering. Here are ways to judge firewood moisture.

- Using a moisture meter, select the species of fuel and then penetrate the pins into a split piece. Ideal moisture and seasoned firewood should be less than 20% moisture content.
- Checks or cracks in the end grain can be an indication of dryness, but may not be a reliable indicator. Some wet wood has checks and some dry wood has no checks.
- The wood tends to darken from white or cream colour to grey or yellow as it dries.
- Two dry pieces banged together sound hollow; wet pieces sound solid and dull.
- Dry wood weighs much less than wet wood.
- Split a piece of wood. If the exposed surface feels damp, the wood is too wet to burn.

Operating Instructions

With your unit now correctly installed and safety inspected by your local authority, you are now ready to start a fire. Before establishing your first fire, it is important that you fully understand the operation of your draft control.

WARNING
Fireplace Stoves equipped with doors should be operated only with doors fully closed. If doors are left partly open, gas and flame may be drawn out of the fireplace stove opening, creating risks from both fire and smoke.

Draft Control

Both the primary and air wash drafts are controlled by the control slide located on the front left side of the unit, below the ashlip (when facing the unit). To increase your draft - slide to the left to open, and to decrease - slide to the right to close. The F1150 unit has a secondary draft system that continually allows combustion air to the induction ports at the top of the firebox.

Draft is the force which moves air from the appliance up through the chimney. The amount of draft in your chimney depends on the length of the chimney, local geography, nearby obstructions and other factors. Too much draft may cause excessive temperatures in the appliance. Inadequate draft may cause back puffing into the room and plugging of the chimney.

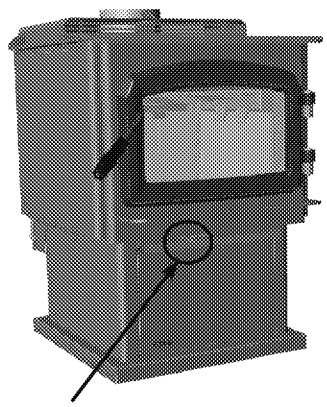

Primary Air Damper
Left - Open Right - Closed

WARNING: To build a fire in ignorance or to disregard the information contained in this section can cause serious permanent damage to the unit and void your warranty!!

Air Operating Handle

The F1150 is supplied with an air operating handle. The handle is used to adjust the air control for the desired heat output.

Install the operating handle storage bracket on the bottom right or left side screw that secures the side shield.

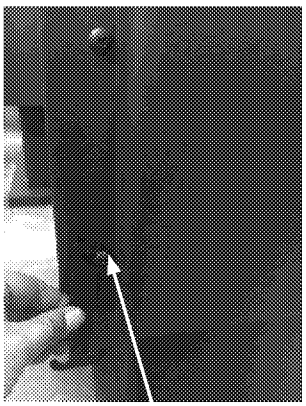

Loosen screw and insert storage bracket.

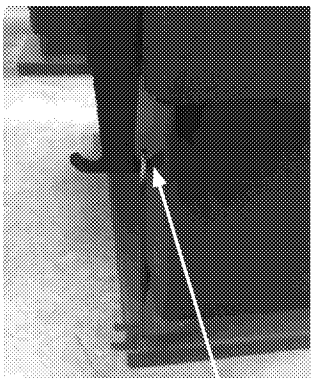

Hang operating handle after use

Using the operating handle:

Air control for heat output

First Fire

When your installation is completed and inspected you are ready for your first fire.

THIS UNIT IS DESIGNED TO BURN SEASONED CORDWOOD ONLY. COAL AND BRIQUETTES ARE NOT APPROVED.

1. Open firebox door and build a small fire using paper and dry kindling on the firebrick hearth, **DO NOT USE A GRATE. CAUTION: DO NOT BUILD FIRE TOO CLOSE TO GLASS.** Secure door on the firebox and wait a few minutes for a good updraft in the flue to establish the fire. (Leaving the door slightly open will help your fire start more rapidly.)

   CAUTION: Never leave unit unattended if door is left open. This procedure is for fire start-up only, as unit may overheat if door is left open for too long.

2. Add two or three seasoned logs to your fire. Form a trench in the ash bed to allow air to reach the rear of the firebox prior to closing the door.

3. From the start up of a cold stove, a medium to high firing rate must be maintained for 30 min. This ensures that the stove, and fuel are all stabilized at proper operating temperatures. Even though it is possible to have high temperatures within minutes after a fire has been started, if the fire is allowed to die down immediately it may go out. During re-fueling and rekindling of the cool fire, or a fire that has burned down to the charcoal phase, operate the stove at a medium to high firing rate for about 10 minutes to ensure to reach operating temperatures.

   WARNING: Never build a roaring fire in a cold stove. Always warm your stove up slowly!

NOTE: Always stir the coal approximately half way through a burn cycle to ensure proper charcoaling.

4. During the first few fires, keep the combustion rate at a moderate level and avoid a large fire. Only after 5 or 6 such fires can you operate the stove at its maximum setting, and only after the metal has been warmed.

5. For the first few days, the stove will give off an odour from the paint. This is to be expected as the high temperature paint becomes seasoned. Windows and/or doors should be left open to provide adequate ventilation while this temporary condition exists. Burning the stove at a very high temperature the first few times may damage the paint. Burn fires at a moderate level the first few days.

6. Do not place anything on the stove top during the curing process. This may result in damage to your paint finish.

7. During the first few days it may be more difficult to start the fire. As you dry out your firebrick and your masonry flue, your draft will increase.

8. For those units installed at higher elevations or into sub-standard masonry fireplaces, drafting problems may occur. Consult an experienced dealer or mason on methods of increasing your draft.

9. Some cracking and popping noises may be experienced during the heating up process. These noises will be minimal when your unit reaches temperature.

10. All fuel burning appliances consume oxygen during operation. It is important that you supply a source of fresh air to your unit while burning. A slightly opened window is sufficient for the purpose. If you also have a fireplace in your home, a downdraft may be created by your Regency Stove causing a draft down your chimney. If this occurs, slightly open a window near your unit.

WARNING: If the body of your unit, or any part of the chimney connector starts to glow, you are over firing. Stop loading fuel immediately and close the draft control until the glow has completely subsided.

11. If you have been burning your stove on a low draft, use caution when opening the door. After opening the damper, open the door a crack, and allow the fire to adjust before fully opening the door.

12. The controls of your unit or the air supply passages should not be altered to increase firing for any reason.

13. If you burn the unit too slowly or at too low a setting your unit will not be operating as efficiently as it can. An easy rule of thumb says that if your glass is clean, then your flue is clean and your exhaust is clean. Burn the stove hot enough to keep your glass clean and you won't need to clean your flue as often.

ED_005996_00000513-00211

Fan Operation

Automatic
To operate the fan - turn on the rheostat.

This will allow the fan to turn on as the stove has come up to operating temperature. It will also shut the fan system off after the fire has gone out and the unit cooled to below a useful heat output range.

Operate the fan in the low speed position when burning in the LOW-MED LOW heat output ranges and operate in the high setting for MED-HIGH to HIGH heat outputs.

Route power cord to either left or right behind unit.

Ash Disposal

During constant use, ashes should be removed every few days. The Ash Drawer option features a convenient ash dump for easy removal of ash, refer to Modular Installation Options section.

Safety Precautions

1. Do not allow ashes to build up to the loading doors! Only remove ashes when the fire has died down. Even then, expect to find a few hot embers.

2. Please take care to prevent the build-up of ash around the start-up air housing located inside the stove box, under the loading door lip.

3. Never start a fire if the ash plug and ash drawer are not in place. This will cause over firing which can cause excessive warping of the stove. Evidence of over firing can void the warranty on your stove.

4. The firebricks are brittle and can be damaged if the plug is replaced carelessly or pieces that are too large are forced through the hole.

Ash Drawer Operating Guidelines

1. Only clean ashes out of the stove when the unit has cooled down. Remove the plug by lifting on the handle using the tool provided. The plug may still be warm, use caution. Push the ashes down the hole into the ash drawer, the large pieces can be left in the firebox and burned during the next fire or removed through the door opening.

2. Always leave 1/2 to 1 inch of ash in the bottom of the firebox. This helps in easier starting and a more uniform burn of your fire. Replace ash plug when ashes have been removed.

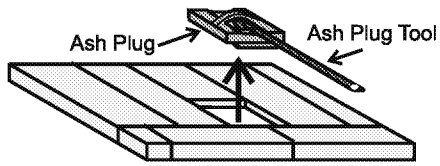

3. **Pedestal Units:**
   To remove the drawer, lift slightly and slide it out. When the drawer is completely out, slide the cover plate over the ash drawer and carry away.

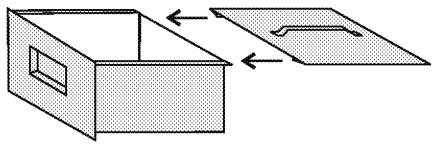

CAUTION: HOT WHILE IN OPERATION. KEEP CHILDREN, CLOTHING AND FURNITURE AWAY. CONTACT MAY CAUSE SKIN BURNS.

4. When emptying the ash drawer, make sure the ashes are cold. Ashes should be placed in a metal container with a tight fitting lid. The closed container of ashes should be placed on a non-combustible floor or on the ground, well away from all combustible materials, pending final disposal. If the ashes are disposed of by burial in soil or otherwise locally dispersed, they should be retained in the closed container until all cinders have thoroughly cooled. Other waste should not be placed in the ash container.

5. Before putting the ash drawer back into place, make sure the ash plug is back in place.

   Pedestal Units: make sure the cover lid is off.

Safety Guidelines and Warnings

CAUTION: Do not use chemicals for fluids to start fire.

1. **CAUTION:** Never use gasoline, gasoline type lantern fuels, kerosene, charcoal lighter fuel, or similar liquids to start or 'freshen up' a fire in your heater. Keep all such liquids well away from the heater while it is in use.

2. Keep the door closed during operation and maintain all seals in good condition.

3. Do not burn any quantities of paper, garbage, and never burn flammable fluids such as gasoline, naptha or engine oil in your stove.

4. If you have smoke detectors, prevent smoke spillage as this may set off a false alarm.

5. Do not overfire heater. If the chimney connector, flue baffle or the stove top begin to glow, you are over firing. Stop adding fuel and close the draft control. Over firing can cause extensive damage to your stove including warping and premature steel corrosion. Over firing will void your warranty.

6. Do not permit creosote or soot build-up in the chimney system. Check and clean chimney at regular intervals. Failure to do so can result in a serious chimney fire.

7. Your Regency stove can be very hot. You may be seriously burned if you touch the stove while it is operating, keep children, clothing and furniture away. Warn children of the burn hazard.

8. The stove consumes air while operating, provide adequate ventilation with an air duct or open a window while the stove is in use.

9. Do not connect this unit to a chimney flue serving another appliance.

10. Do not use grates or andirons or other methods for supporting fuel. Burn directly on the bricks.

11. Open the draft control fully for 10 to 15 seconds prior to slowly opening the door when refuelling the fire.

12. Do not connect your unit to any air distribution duct.

13. This heater is designed to burn natural wood only. Higher efficiencies and lower emissions generally result when burning air dried seasoned hardwoods, as compared to softwoods or to green or freshly cut hardwoods.

14. **WARNING: Do not operate without either the Ash Plug properly seated or the Ash Dump Plates screwed in place, excessive temperatures will result.**

15. **CAUTION: Do not operate with broken glazing.**

16. **WARNING: Do not use abrasive cleaners to clean the glass window.**

17. **WARNING: Avoid impact on glass doors such as striking or slamming shut.**

DO NOT BURN:

- Treated wood
- Coal
- Garbage
- Cardboard
- Solvents
- Colored Paper
- Trash
- Salt drift wood
- Cut lumber, plywood, mill ends
- Kiln dried wood

CAUTION: DO NOT BURN GARBAGE OR FLAMMABLE LIQUIDS SUCH AS GASOLINE, NAPTHA, OR ENGINE OIL. SOME FUELS COULD GENERATE CARBON MONOXIDE AND ARE VERY DANGEROUS.

CAUTION: DO NOT CONNECT TO, OR USE IN CONJUNCTION WITH ANY AIR DISTRIBUTION DUCT WORK UNLESS SPECIFICALLY APPROVED FOR SUCH INSTALLATION.

Maintenance

It is very important to carefully maintain your fireplace stove, including burning seasoned wood and maintaining a clean stove and chimney system. Have the chimney cleaned before the burning season and as necessary during the season, as creosote deposits may build up rapidly. Moving parts of your stove require no lubrication.

Creosote

When wood is burned slowly, it produces tar and other organic vapours combine with moisture to form creosote. The creosote vapours condense in the relatively cool chimney flue of a slow burning fire. As a result, creosote residue accumulates on the flue lining. When ignited, this creosote can result in an extremely hot fire.

The chimney connector and chimney should be inspected at least once every two months during the heating season to determine if creosote build up has occurred. If creosote has accumulated it should be removed to reduce the risk of chimney fire.

CAUTION: Things to remember in case of a chimney fire:

1. Close all draft and damper controls.

2. CALL THE FIRE DEPARTMENT.

Ways to Prevent and Keep Unit Free of Creosote

1. Burn stove with the draft control wide open for about 10-15 minutes every morning during burning season.

2. Burn stove with draft control wide open for about 10 - 15 minutes every time you apply fresh wood. This allows the wood to achieve the charcoal stage faster and burns up any unburned gas vapours which might otherwise be deposited within the system.

3. Only burn seasoned wood! Avoid burning wet or green wood. Seasoned wood has been dried at least one year.

4. A small hot fire is preferable to a large smouldering one that can deposit creosote within the system.

5. The chimney and chimney connector should be inspected at least once every two months during the heating season to determine is a creosote buildup has occurred.

6. **Have chimney system and unit cleaned by competent chimney sweeps twice a year during the first year of use and at least once a year thereafter or when a significant layer of creosote has accumulated (3 mm/1/8" or more) it should be removed to reduce the risk of a chimney fire.**

Door Gasket

If the door gasket requires replacement 7/8" diameter material must be used. Regency uses a gasket rope 7/8" (Part #846-570). A proper high temperature gasket adhesive is required. See your Regency Dealer.
The door catch may require adjustment as the door gasket compresses after a few fires. The door latch compression may require adjustment to renew seal. Removal of a shim, (see section in this manual), will allow the latch to be moved closer to the door frame, causing a tighter seal.

Glass Maintenance

Your Regency stove is supplied with 5mm Neoceram ceramic glass (Part #846-306) that will withstand the highest heat that your unit will produce. In the event that you break your glass by impact, purchase your replacement from an authorized Regency dealer only, and follow our step-by-step instructions for replacement (refer to Glass Replacement section).

Allow the stove to cool down before cleaning the glass. Cleaning the glass will prevent build up of carbon and allow full view of the fire.

WARNING: Do not clean the glass when it is hot.

WARNING: Do not use abrasive cleaners, a damp cloth and glass cleaner is effective.

WARNING: Do not use substitute materials.

WARNING: Do not abuse the glass door, such as striking of slamming shut.

WARNING: Do not operate with broken glass.

Wood Storage

Store wood under cover, such as in a shed, or covered with a tarp, plastic, tar paper, sheets of scrap plywood, etc., as uncovered wood can absorb water from rain or snow, delaying the seasoning process.

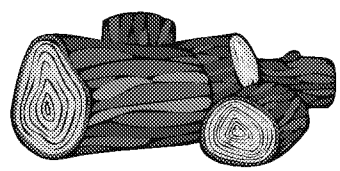

Secondary Air Tube Removal / Installation

1. Allow the stove to burn out and cool down, until cool to touch.

2. Open stove door to access secondary air tubes.

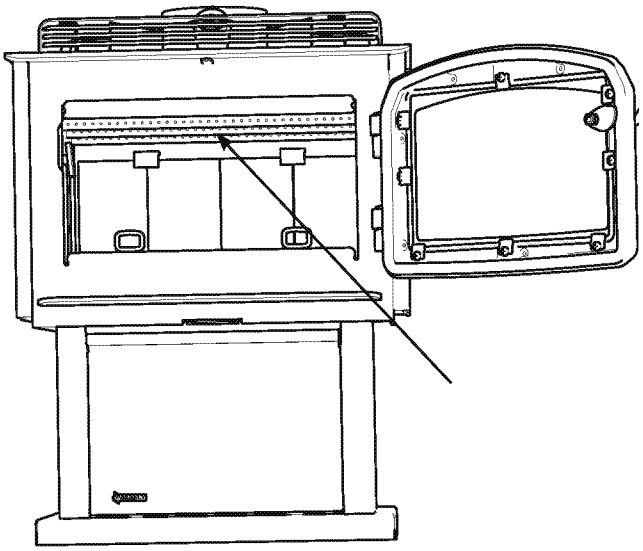

Secondary Air Tubes

3. Grasp secondary air tube firmly with vise grips, using a hammer tap vise grips from right to left until air tube is released from grip. Remove.

4. Remove top left and right metal retainers, followed by the fragile three piece C-Cast Baffles, then remove the remaining 2 tubes.

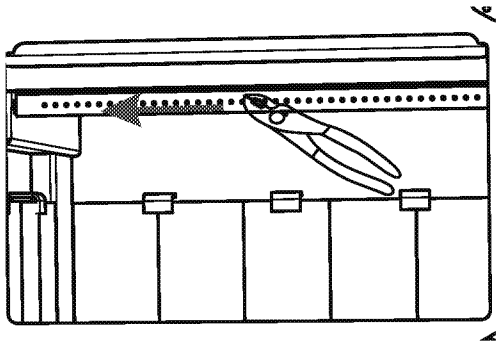

5. To reinstall or replace, first slide left side of tube into hole on left side air channel. Align tab on right side air channel with notch on right hand end of air tube. Firmly grip center of air tube with vise grips, use hammer to tap vise grips from left to right until the tube bottoms out into the air channel on right.

Latch Adjustment

The door latch may require adjustment as the door gasket material compresses after a few fires. Removal of the spacer washer, shown in the diagram below, will allow the latch to be moved closer to the door frame, causing a tighter seal. Remove and replace the nuts, washer and spacer as shown.

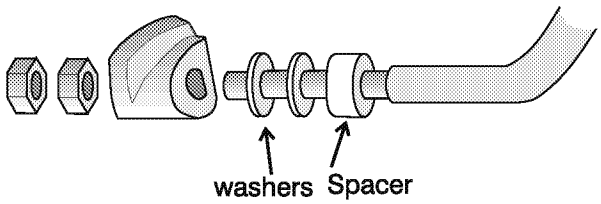

Vertical Stainless Deflector Replacement

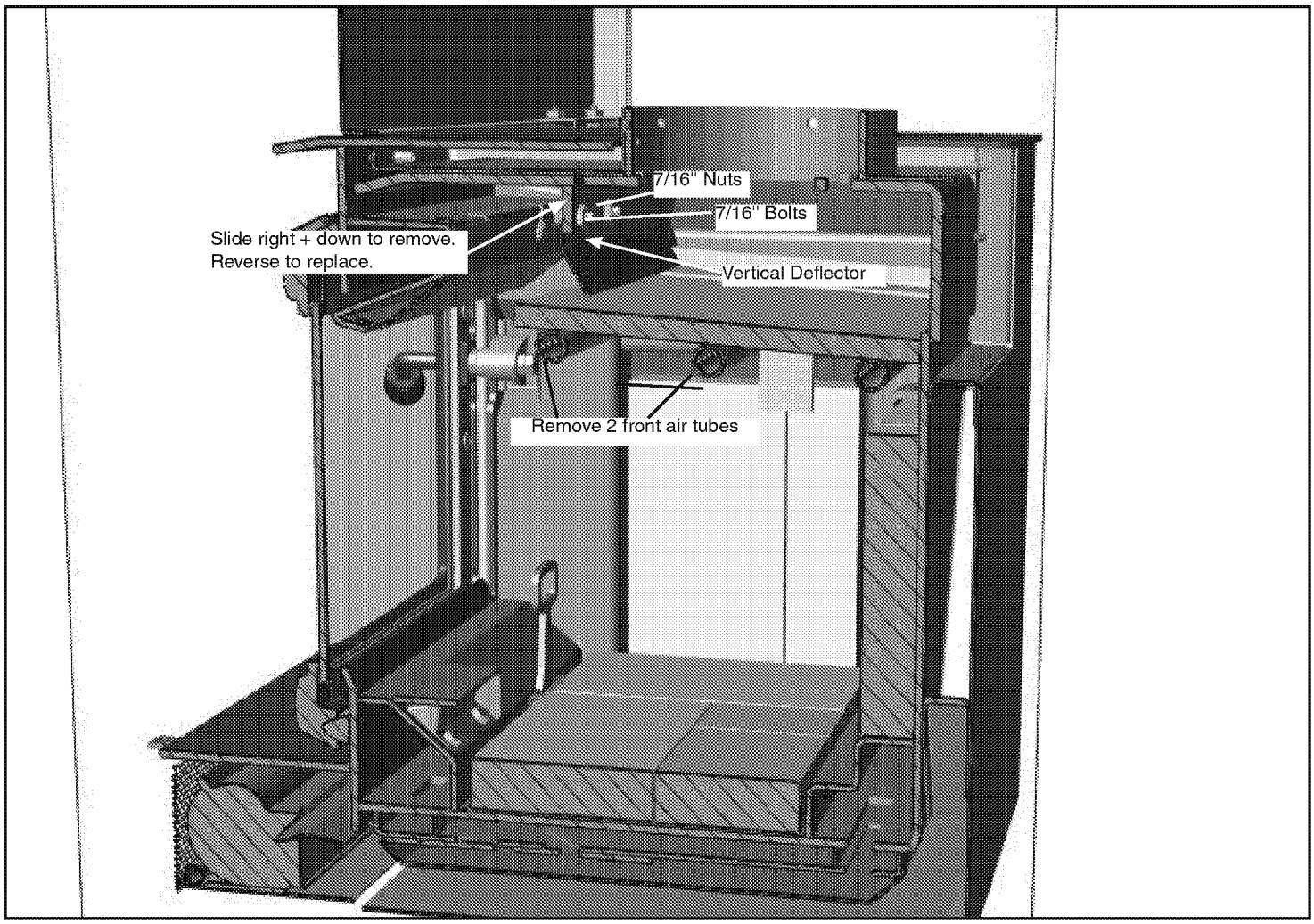

1. Remove 2 front secondary air tubes / vermiculite baffles as per page 21.
2. Loosen the two 7/16" bolts + nuts to remove / replace vertical baffle.
3. Repeat steps to install new vertical deflector.

NOTE: ENSURE BAFFLE IS PUSHED UP AS FAR AS POSSIBLE. TIGHT TO TOP OF FIREBOX.

Annual Maintenance	
Completely clean out entire unit	Annually
Inspect air tube, Catalytic Combustor and bricks	Replace any damaged parts.
Adjust door catch assembly	If unable to obtain a tight seal on the door - replace door gasket seal. Readjust door catch after new gasket installed.
Inspect condition and seal of: Glass Gasket Door Gasket	Perform paper test - replace gasket if required
Paper Test	Test the seal on the loading door with a paper bill. Place a paper bill in the gasket area of the door on a cold stove. Close the door. Try to remove the paper by pulling. The paper should not pull out easily, if it does, try adjusting the door latch, if that doesn't solve the problem replace the door gasket.
Check and lubricate door hinge + latch	Use only high temperature anti seize lube. (ie. never seize)
Check glass for cracks	Replace if required.
Clean blower motor	Disconnect power supply. Remove and clean blower. ***DO NOT LUBRICATE***
Inspect and clean chimney	Annual professional chimney cleaning recommended.

NOTE:

Chimney Cleaning

We highly recommend that the chimney cleaning be done by a professional as they will have the necessary tools such as a proper sized brush and special vacuum cleaner designed to deal with fine particles.

parts list

Main Assembly

	Part #	Description
1	075-070	Left Side Heat Shield
2	075-071	Right Side Heat Shield
3	075-040	Side Baffle Cover (Each)
4	075-058F	Draft Control Lever
5	075-052	Bracket Probe
6	815-557	Rear Air Deflector
7	075-955	Baffle Complete Set (Center + Sides)
8	033-953	3/4 OD x 19-1/4 Airtube 3 Per Unit (Each)
11	846-570	7/8" Door Gasket Repair Kit
12	846-306	Replacement Glass - Small (Size :9 1/8" X 15 5/8")
13	936-241	Tape 7/8 Window Adhesive Sold per foot (4 Feet required)
14	075-077F	Glass Retainer
15	021-973	Door Handle Assembly Complete
16	948-079BN	Hinge Cap Brush Nickel (Each)
17	948-146	Long Black Handle
18	850-241	Black Door - Complete
18	850-243	Black with Nickel Accent Door - Complete
19	075-917	Fan Assembly Complete
20	910-142	Fan Thermodisc
21	910-330	Fan Speed Controller
21	904-586	Fan Speed Controller Knob
22	075-912	Airmate
24	075-063F	Andiron (Each)
25	172-032	Heat Shield
26	075-037	SS Smoke Deflector
N/S	075-041	Baffle Holder (Each)
N/S	911-096	120 Volt Extension Cord
N/S	075-073F	Tool Hanger
N/S	948-223	Regency Logo Plate
N/S	911-221/P	Fan Motor Only With Squirrel cage
N/S	075-064	Andiron Bracket (Each)
N/S	106-129	Control Tool
N/S	075-021	Firebox Floor White Gasket

ED_005996_00000513-00218

Main Assembly

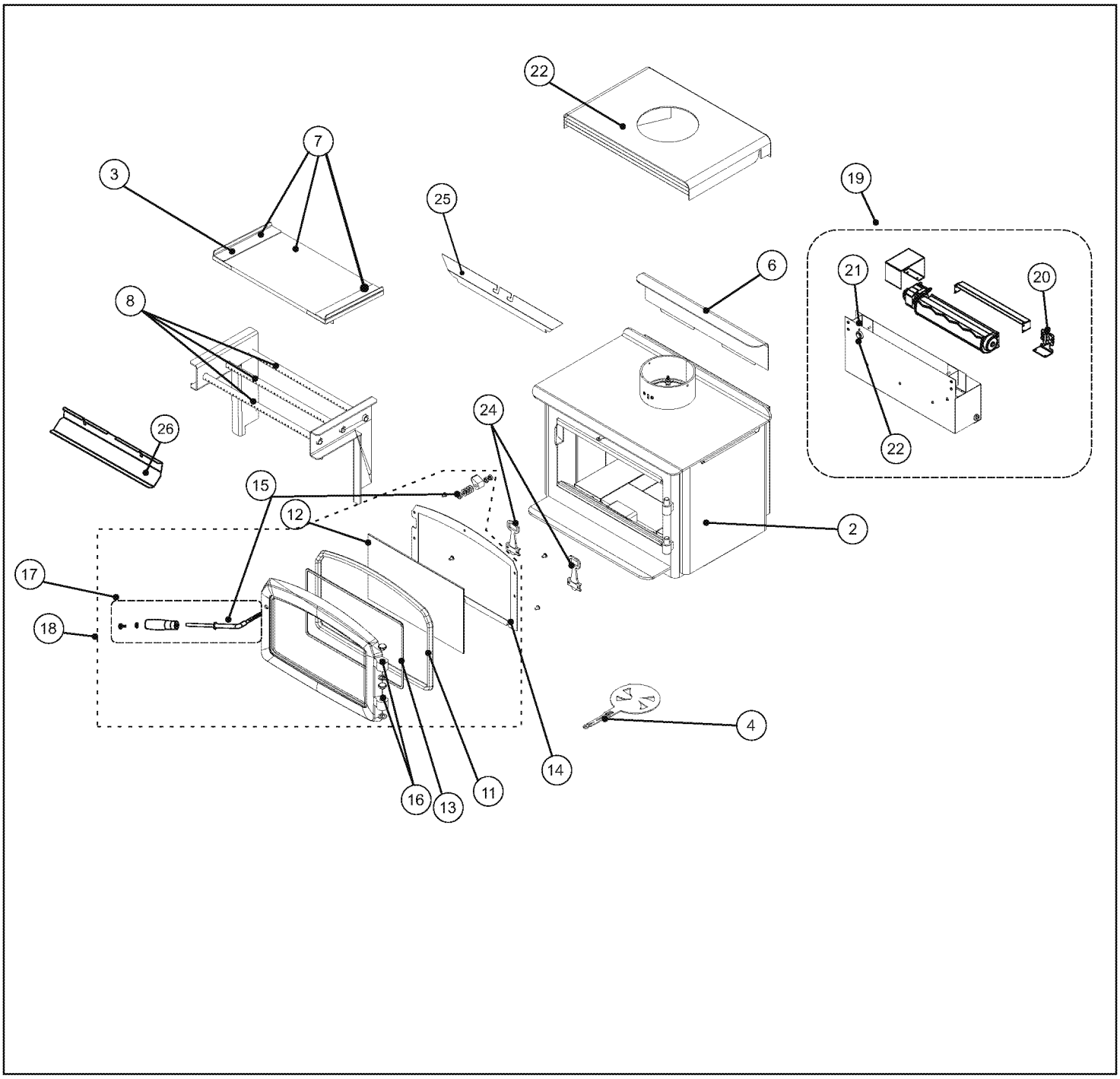

parts list

Bottom Shield and Legs

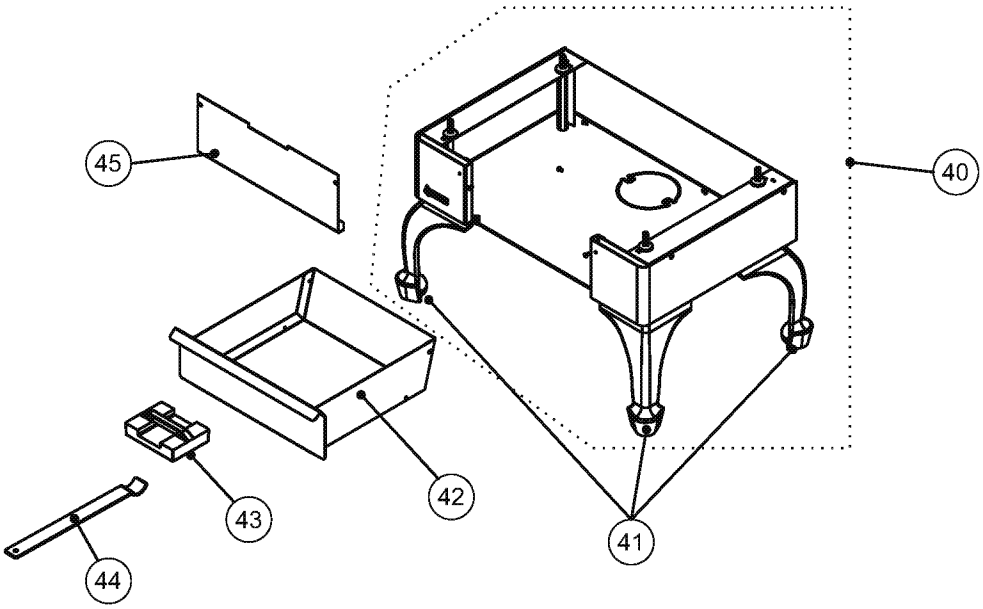

	part #	description
40	075-911	Bottom heat Shield
41	850-126	Black Cast legs (Set Of 4)
41	850-128	Nickel Cast legs (Set Of 4)
42	075-914	Ashdrawer Bottom Heat Shield
43	942-110	Ashplug
44	820-249	Ashplug Tool
45	075-079	Blanking Plate
N/S	905-008	5/16" x 6" Long Hex Head Bolt (Each)
N/S	820-468F	Metal Washer
N/S	820-456	Metal Spacer/Support Bracket (Each)

Pedestal Assembly

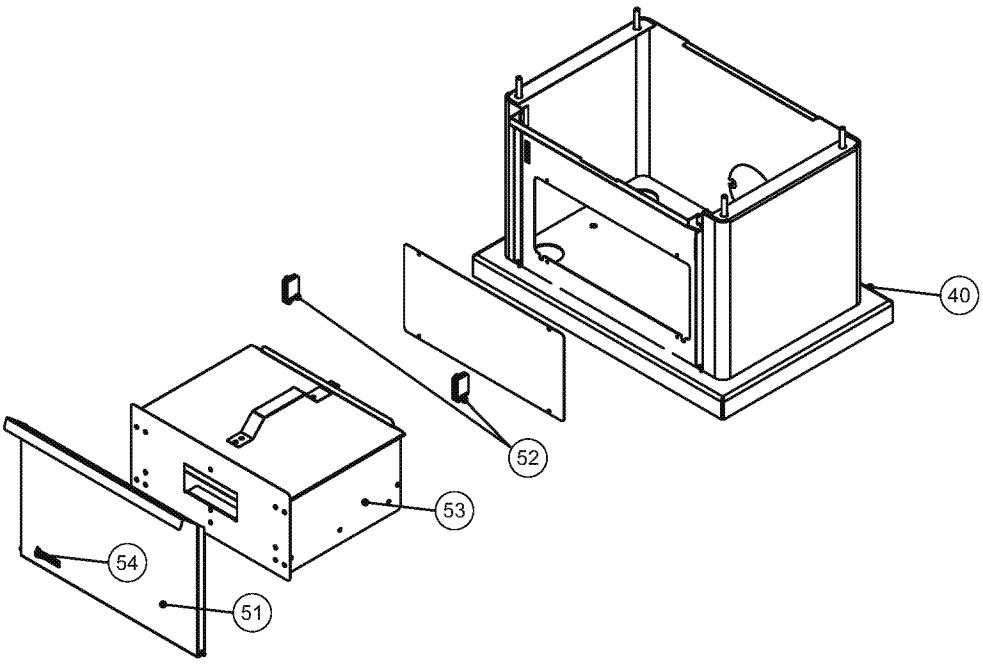

	part #	description
50	075-915	Pedestal Complete
51	075-069	Pedestal Door
52	904-257	Magnetic Catch (Each)
53	075-910	Ashdrawer
54	948-223	Regency Logo Plate
N/S	904-023	5/16 x 1-1/2 Hex Head Bolt (Each)

075-960 F1150S Complete Brick Kit

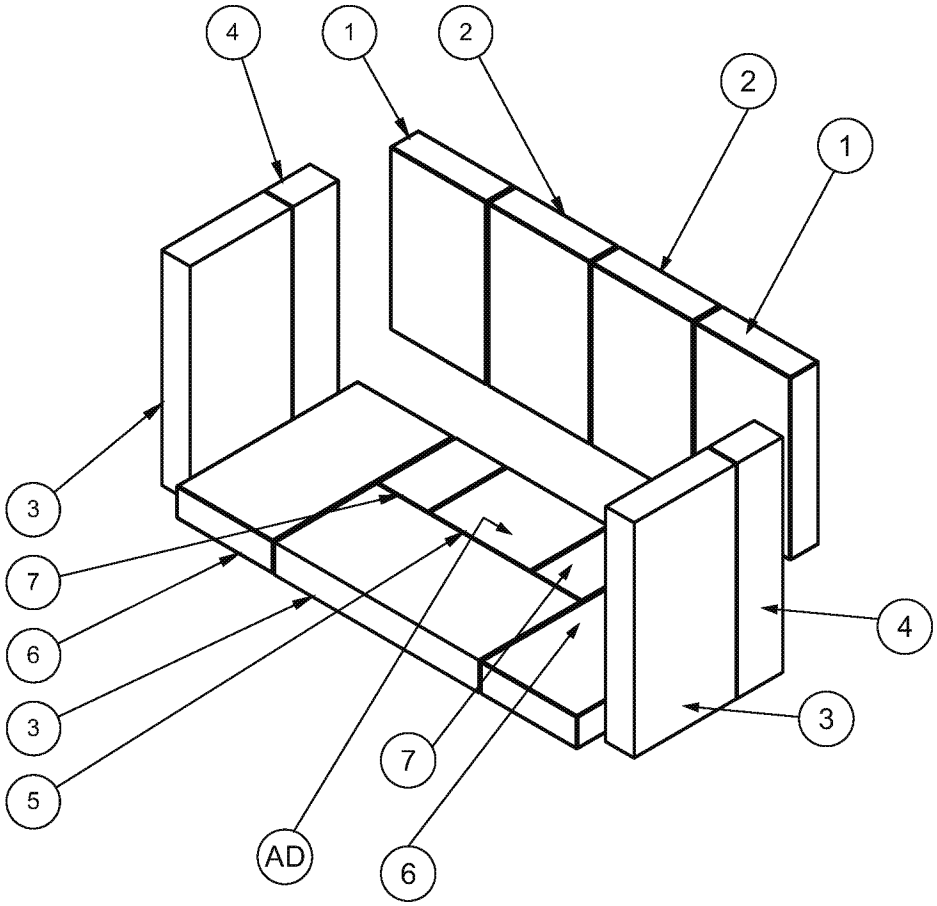

Fire bricks	
#	Size
1	4-1/4" x 7"
2	4-1/2" x 7"
3	9" x 4-1/2"
4	9" x 2"
5	3-1/2" x 4-1/2" (AD)
6	4-1/4" x 8"
7	3-1/2" x 2-1/4"
AD	Ashdump brick

notes

ED_005996_00000513-00222

Limited Lifetime Warranty

FPI Fireplace Products International Ltd. (for Canadian customers) and Fireplace Products U.S., Inc. (for U.S. customers) (collectively referred to herein as "FPI") extends this Limited Lifetime Warranty to the original purchaser of this appliance provided the product remains in the original place of installation. The items covered by this limited warranty and the period of such coverage is set forth in the table below.

Some conditions apply (see below).

The policy is not transferable, amendable, or negotiable under any circumstances.

Wood Products	Component Coverage					Labor Coverage
Components Covered	Limited Lifetime	5 years	2 years	1 year	Warranty	(Years)
Welded Firebox Steel	✓					5
All Stainless Steel Components, Smoke Deflectors, Heat Shields etc.	✓					3
Air Tubes	✓					3
Airmate	✓					3
Door handle and latch assembly, all hardware	✓					3
Glass Thermal Breakage Only	✓					3
Steel Faceplates, Accessory Housings	✓					3
All Plating	✓					3
Ash Drawer, Heatshields, Pedestal	✓					
All Baffles, Steel, Ceramic, Vermiculite C-Baffles	✓					
All castings, firebox, surrounds, doors, panels etc.		✓				3
All Electrical, Blower, wiring, switches etc.			✓			2
Glass - Crazing				✓		1
Catalyst Combustor					*10 Years Prorated	
Venting/Chimney				✓		1
Screens				✓		1

*See specific warranty details in regards to the catalyst combustor in unit manual.

Conditions:

Warranty protects against defect in manufacture or FPI factory assembled components only, unless herein specified otherwise.

Any part(s) found to be defective during the warranty period as outlined above will be repaired or replaced at FPI's option through an accredited distributor, dealer or pre-approved and assigned agent provided that the defective part is returned to the distributor, dealer or agent for inspection if requested by FPI. Alternatively, FPI may at its own discretion fully discharge all of its obligations under the warranty by refunding the verified purchase price of the product to the original purchaser. The purchase price must be confirmed by the original Bill of Sale.

The authorized selling dealer, or an alternative authorized FPI dealer if pre-approved by FPI, is responsible for all in-field diagnosis and service work related to all warranty claims. FPI is not responsible for results or costs of workmanship of unauthorized FPI dealers or agents in the negligence of their service work.
At all times FPI reserves the right to inspect reported complaints on location in the field claimed to be defective prior to processing or authorizing of any claim. Failure to allow this upon request will void the warranty.

All warranty claims must be submitted by the dealer servicing the claim, including a copy of the Bill of Sale (proof of purchase by you). All claims must be complete and provide full details as requested by FPI to receive consideration for evaluation. Incomplete claims may be rejected.

Replacement units are limited to one per warranty term. Airtube and baffle replacements are limited to one replacement per term.

Unit must be installed according to all manufacturers' instructions as per the manual.

All Local and National required codes must be met.

The installer is responsible to ensure the unit is operating as designed at the time of installation.

The original purchaser is responsible for annual maintenance of the unit, as outlined in the owner's manual. As outlined below, the warranty may be voided due to problems caused by lack of maintenance.

Repair/replacement parts purchased by the consumer from FPI after the original coverage has expired on the unit will carry a 90 day warranty, valid with a receipt only. Any item shown to be defective will be repaired or replaced at our discretion. No labor coverage is included with these parts.

Exclusions:
This Limited Lifetime Warranty does not extend to rust or corrosion of any kind due to: a lack of maintenance or improper venting, lack of combustion air provision, or exposure to corrosive chemicals (i.e. chlorine, salt, air, etc.).

This Limited Lifetime Warranty also does not extend to: paint, firebricks (rear, sides, or bottom), door gasketing, glass gasketing (or any other additional factory fitted gasketing), vermiculite floor bricks, andiron assemblies, and flue damper rods.

Malfunction, damage or performance based issues as a result of environmental conditions, location, chemical damages, downdrafts, installation error, installation by an unqualified installer, incorrect chimney components (including but not limited to cap size or type), operator error, abuse, misuse, use of improper fuels (such as unseasoned cordwood, mill-ends, construction lumber or debris, off-cuts, treated or painted lumber, metal or foil, plastics, garbage, solvents, cardboard, coal or coal products, oil based products, waxed cartons, compressed pre-manufactured logs, kiln dried wood), lack of regular maintenance and upkeep, acts of God, weather related problems from hurricanes, tornados, earthquakes, floods, lightning strikes/bolts or acts of terrorism or war, which result in malfunction of the appliance are not covered under the terms of this Limited Lifetime Warranty.

FPI has no obligation to enhance or modify any unit once manufactured (i.e. as products evolve, field modifications or upgrades will not be performed on existing appliances).

This warranty does not cover dealer travel costs for diagnostic or service work. All labor rates paid to authorized dealers are subsidized, pre-determined rates. Dealers may charge homeowner for travel and additional time beyond their subsidy.

Any unit showing signs of neglect or misuse will not be covered under the terms of this warranty policy and may void this warranty. This includes units with rusted or corroded fireboxes which have not been reported as rusted or corroded within three (3) months of installation/purchase.

Units which show evidence of being operated while damaged, or with problems known to the purchaser and causing further damages will void this warranty.

Units where the serial no. has been altered, deleted, removed or made illegible will void this warranty.

Minor movement, expansion and contraction of the steel is normal and is not covered under the terms of this warranty.

FPI is not liable for the removal or replacement of facings or finishing in order to repair or replace any appliance in the field.

Freight damages for products or parts are not covered under the terms of the warranty.

Products made or provided by other manufacturers and used in conjunction with the FPI appliance without prior authorization from FPI may void this warranty.

ED_005996_00000513-00224

Limitations of Liability:
The original purchaser's exclusive remedy under this warranty, and FPI's sole obligation under this warranty, express or implied, in contract or in tort, shall be limited to replacement, repair, or refund, as outlined above. IN NO EVENT WILL FPI BE LIABLE UNDER THIS WARRANTY FOR ANY INCIDENTAL OR CONSEQUENTIAL COMMERCIAL DAMAGES OR DAMAGES TO PROPERTY. TO THE EXTENT PERMITTED BY APPLICABLE LAW, FPI MAKES NO EXPRESS WARRANTIES OTHER THAN THE WARRANTY SPECIFIED HEREIN. THE DURATION OF ANY IMPLIED WARRANTY IS LIMITED TO DURATION OF THE EXPRESSED WARRANTY SPECIFIED ABOVE. IF IMPLIED WARRANTIES CANNOT BE DISCLAIMED, THEN SUCH WARRANTIES ARE LIMITED IN DURATION TO THE DURATION OF THIS WARRANTY.

Some U.S. states do not allow limitations on how long an implied warranty lasts, or allow exclusion or limitation of incidental or consequential damages, so the above limitations or exclusions may not apply to you.

Customers located outside the U.S. should consult their local, provincial or national legal codes for additional terms which may be applicable to this warranty.

How to Obtain Warranty Service:
Customers should contact the authorized selling dealer to obtain all warranty and service. In the event the authorized selling dealer is unable to provide warranty / service, please contact FPI by mail at the address listed below. Please include a brief description of the problem and your address, email and telephone contact information. A representative will contact you to make arrangements for an inspection and/or warranty service, by an alternative dealer.

Product Registration and Customer Support:
Thank you for choosing a Regency Fireplace. Regency strives to be a world leader in the design, manufacture, and marketing of hearth products. To provide the best support for your product, we request that you complete a product registration form at http://www.regency-fire.com/Customer-Care/Warranty-Registration.aspx within ninety (90) days of purchase.

ED_005996_00000513-00225

Product Registration and Customer Support:

Thank you for choosing a Regency Fireplace. Regency strives to be a world leader in the design, manufacture, and marketing of hearth products. To provide the best support for your product, we request that you complete a product registration form found on our Web Site under Customer Care within ninety (90) days of purchase.

For purchases made in **CANADA or the UNITED STATES**:
http://www.regency-fire.com/Customer-Care/Warranty-Registration.aspx

For purchases made in AUSTRALIA:
http://www.regency-fire.com.au/Customer-Care/Warranty-Registration.aspx

You may also complete the warranty registration form below to register your Regency Fireplace Product and mail and/or fax it back to us, and we will register the warranty for you. It is important you provide us with all the information below in order for us to serve you better.

Warranty Registration Form (or Register online immediately at the above Web Site):

Warranty Details	
Serial Number (required):	
Purchase Date (required) (mm/dd/yyyy):	
Product Details	
Product Model (required):	
Dealer Details	
Dealer Name (required):	
Dealer Address:	
Dealer Phone #:	
Installer:	
Date Installed (mm/dd/yyyy):	
Your Contact Details (required)	
Name:	
Address:	
Phone:	
Email:	

For purchases made in CANADA:

FPI Fireplace Products International Ltd.
6988 Venture St.
Delta, British Columbia
Canada, V4G 1H4

Phone: 604-946-5155
Fax: 1-866-393-2806

For purchases made in the UNITED STATES:

Fireplace Products U.S., Inc.
PO Box 2189 PMB 125
Blaine, WA
United States, 98231

Phone: 604-946-5155
Fax: 1-866-393-2806

For purchases made in AUSTRALIA:

Fireplace Products Australia Pty Ltd
1- 3 Conquest Way
Hallam, VIC
Australia, 3803

Phone: +61 3 9799 7277
Fax: +61 3 9799 7822

For fireplace care and tips and answers to most common questions please visit our Customer Care section on our Web Site. Please feel free to contact your selling dealer if you have any questions about your Regency product.

ED_005996_00000513-00226

ED_005996_00000513-00227

notes

ED_005996_00000513-00228

ED_005996_00000513-00229

notes

ED_005996_00000513-00230

ED_005996_00000513-00231

Installer: Please complete the following information

Dealer Name & Address: .....

.....

Installer: .....

Phone #: .....

Date Installed: .....

Serial No.: .....

Regency is a trademark of FPI Fireplace Products International Ltd.
© Copyright 2019, FPI Fireplace Products International Ltd. All rights reserved.

Printed in Canada

duplicate serial number | 530

0219WS027S

LISTED SPACE HEATER, SOLID FUEL TYPE, ALSO SUITABLE FOR MOBILE HOME INSTALLATION / APPAREIL DE CHAUFFAGE AMBIANT HOMOLOGUÉ À COMBUSTIBLE SOLIDE, CONVENANT AUSSI POUR INSTALLATION DANS UNE MAISON MOBILE

DO NOT REMOVE THIS LABEL/ NE RETIREZ PAS CETTE ÉTIQUETTE

530

MODEL: REGENCY SMALL FREESTANDING STOVE - F1150
TESTED TO: ULC S627-00 / UL 1482-2011 (R2015)

U.S. ENVIRONMENTAL PROTECTION AGENCY CERTIFIED TO COMPLY WITH 2020 PARTICULATE EMISSION STANDARDS USING CORD WOOD." TESTED TO ASTM E3053. MODEL REGENCY F1150 – 1.7G /HR. THIS WOOD HEATER NEEDS PERIODIC INSPECTION AND REPAIR FOR PROPER OPERATION. CONSULT THE OWNER'S MANUAL FOR FURTHER INFORMATION. IT IS AGAINST FEDERAL REGULATIONS TO OPERATE THIS WOOD HEATER IN A MANNER INCONSISTENT WITH THE OPERATING INSTRUCTIONS IN THE OWNER'S MANUAL.
CERTIFIÉ CONFORME AUX NORMES 2020 DU U.S. ENVIRONMENTAL PROTECTION AGENCY EN MATIÈRE D'ÉMISSION DE PARTICULES DE BOIS AVEC DU BOIS DE CORDE". APPROUVÉ ASTM E3053. MODÈLE REGENCY F1150M – 1,7 G /H. CET APPAREIL DE CHAUFFAGE AU BOIS DOIT ÊTRE INSPECTÉ PÉRIODIQUEMENT ET RÉPARÉ POUR FONCTIONNER CORRECTEMENT. CONSULTER LE MANUEL D'INSTALLATION POUR PLUS D'INFORMATION. LA RÉGLEMENTATION FÉDÉRALE INTERDIT DE FAIRE FONCTIONNER UN TEL APPAREIL SI LES CONSIGNES D'UTILISATION CONTENUES DANS LE PRÉSENT MANUEL NE SONT PAS RESPECTÉES.

INSTALL AND USE ONLY IN ACCORDANCE WITH THE MANUFACTURER'S INSTALLATION AND OPERATING INSTRUCTIONS. CONTACT LOCAL BUILDING OR FIRE OFFICIALS ABOUT RESTRICTIONS AND INSTALLATION INSPECTION IN YOUR AREA. USE 150 MM (6 IN.) DIAMETER MINIMUM 24 MSG BLACK OR 26 MSG BLUED STEEL CONNECTOR WITH LISTED UL103 HT FACTORY-BUILT CHIMNEY SUITABLE FOR USE WITH SOLID FUELS OR MASONRY CHIMNEY.
SEE LOCAL BUILDING CODE AND MANUFACTURER'S INSTRUCTIONS FOR PRECAUTIONS REQUIRED FOR PASSING A CHIMNEY THROUGH A COMBUSTIBLE WALL OR CEILING. DO NOT PASS CHIMNEY CONNECTOR THROUGH COMBUSTIBLE WALL OR CEILING. DO NOT CONNECT THIS UNIT TO A CHIMNEY FLUE SERVING ANOTHER APPLIANCE.
INSTALLER ET UTILISER SEULEMENT SELON LES INSTRUCTIONS D'INSTALLATION ET D'UTILISATION DU FABRICANT. CONTACTER LES RESPONSABLES DU BÂTIMENT OU DU SERVICE-INCENDIE DE VOTRE RÉGION POUR CONNAÎTRE LES RESTRICTIONS ET EXIGENCES D'INSPECTION DANS VOTRE RÉGION. UTILISER UN CONNECTEUR D'UN DIAMÈTRE MINIMAL DE 150 MM (6 PO) 24 MSG EN ACIER NOIR OU 26 MSG EN ACIER BRONZÉ AVEC CHEMINÉE PRÉFABRIQUÉE HOMOLOGUÉE UL103 HT CONÇUE POUR UTILISATION AVEC COMBUSTIBLES SOLIDES OU UNE CHEMINÉE DE MAÇONNERIE.
VOIR LE CODE DU BÂTIMENT LOCAL ET LES INSTRUCTIONS DU FABRICANT CONCERNANT LES PRÉCAUTIONS EXIGÉES POUR INSTALLER UNE CHEMINÉE TRAVERSANT UN MUR OU PLAFOND EN MATÉRIAUX COMBUSTIBLES. NE FAITES PAS TRAVERSER LE CONNECTEUR DE CHEMINÉE DANS UN MUR OU PLAFOND EN MATÉRIAUX COMBUSTIBLES. NE RACCORDEZ PAS CE POÊLE À BOIS À UN CONDUIT DE CHEMINÉE DESSERVANT UN AUTRE APPAREIL.

MINIMUM ALCOVE CEILING HEIGHT: 2109 MM / 83" MAXIMUM ALCOVE DEPTH 915 MM / 36 IN.
MINIMUM CLEARANCES FOR HORIZONTAL CONNECTOR TO CEILING: 455 MM / 18"
THE SPACE BENEATH THE HEATER MUST NOT BE OBSTRUCTED. OPERATE ONLY WITH FIREBRICKS IN PLACE.
FOR USE WITH SOLID WOOD FUEL ONLY. USE OF OTHER FUELS MAY DAMAGE HEATER AND CREATE A HAZARDOUS CONDITION. DO NOT OBSTRUCT COMBUSTION AIR OPENINGS. OPERATE ONLY WITH FIREBRICKS IN PLACE. RISK OF SMOKE AND FLAME SPILLAGE, OPERATE ONLY WITH DOORS FULLY CLOSED. IF INSTALLED IN A MOBILE HOME OPERATE ONLY WITH DOORS FULLY CLOSED - OPEN FEED DOOR TO FEED FIRE ONLY. DO NOT USE GRATE OR ELEVATE FIRE. BUILD WOOD FIRE DIRECTLY ON HEARTH. DO NOT OVERFIRE - IF HEATER OR CHIMNEY CONNECTOR GLOWS YOU ARE OVERFIRING. INSPECT AND CLEAN CHIMNEY AND CONNECTOR FREQUENTLY. UNDER CERTAIN CONDITIONS OF USE CREOSOTE BUILDUP MAY OCCUR RAPIDLY. KEEP FURNISHINGS AND OTHER COMBUSTIBLE MATERIAL AWAY FROM HEATER. REPLACE GLASS ONLY WITH NEOCERAM GLASS. COMBUSTIBLE FLOOR MUST BE PROTECTED BY NON-COMBUSTIBLE MATERIAL EXTENDING BENEATH THE HEATER AND TO THE FRONT AND SIDES AS INDICATED OR TO THE NEAREST PERMITTED COMBUSTIBLE MATERIAL.
OPTIONAL COMPONENT: FAN PART #075-917, ELECTRICAL RATING: VOLTS 115, 60 HZ, 2 AMPS
DANGER: RISK OF ELECTRIC SHOCK. DISCONNECT POWER BEFORE SERVICING UNIT. DO NOT ROUTE POWER CORD UNDER OR IN FRONT OF APPLIANCE.
COMPONENTS REQUIRED FOR MOBILE HOME INSTALLATION: OUTSIDE AIR KIT
IN CANADA: LISTED ULCS 629 CHIMNEY. USE CHIMNEY COMPONENTS AS SPECIFIED IN INSTALLATION/INSTRUCTIONS
WARNING: ONLY USE LISTED REGENCY OPTIONS SUCH AS LEGS, AIRMATE, FAN AS SHOWN IN THE INSTALLATION MANUAL.
CAUTION: BURNING OF MATERIALS OTHER THAN SPECIFIED MAY CAUSE DAMAGE TO THE UNIT.
CAUTION: MOVING PARTS MAY CAUSE INJURY.
IN USA: LISTED UL 103 HT CHIMNEY
HAUTEUR MINIMALE DU PLAFOND DE L'ALCÔVE : 2108 MM / 83 PO PROFONDEUR MAXIMALE DE L'ALCÔVE : 915 MM / 36 PO
DÉGAGEMENT MINIMAL DU PLAFOND POUR UN CONNECTEUR HORIZONTAL : 455 MM / 18 PO.
L'ESPACE AU-DESSOUS DU POÊLE NE DOIT PAS ÊTRE OBSTRUÉ. UTILISER SEULEMENT AVEC LES BRIQUES RÉFRACTAIRES EN PLACE.
POUR UTILISATION AVEC BOIS SOLIDE SEULEMENT. L'UTILISATION D'AUTRES COMBUSTIBLES PEUT ENDOMMAGER LE POÊLE ET CRÉER UNE CONDITION DANGEREUSE.
NE PAS OBSTRUER LES OUVERTURES D'AIR DE COMBUSTION. UTILISER SEULEMENT AVEC LA PORTE FERMÉE – OUVRIR LA PORTE DE CHARGEMENT POUR ALIMENTER LE FEU SEULEMENT. NE PAS UTILISER DE GRILLE À BÛCHES NI SURÉLEVER LE FEU. MONTER LE FEU DE BOIS DIRECTEMENT SUR L'ÂTRE. NE PAS SURCHAUFFER – SI LE POÊLE OU LE CONNECTEUR DE CHEMINÉE SE MET À ROUGIR, VOUS SURCHAUFFEZ. INSPECTEZ ET NETTOYEZ FRÉQUEMMENT LA CHEMINÉE ET LE CONNECTEUREN CERTAINES CONDITIONS D'UTILISATION, UN DÉPÔT DE CRÉOSOTE PEUT SE FORMER RAPIDEMENT. GARDEZ LES MEUBLES ET AUTRES MATÉRIAUX COMBUSTIBLES ÉLOIGNÉS DU POÊLE. REMPLACEZ LA VITRE SEULEMENT PAR DU VERRE EN NEOCERAM. LE PLANCHER COMBUSTIBLE DOIT ÊTRE PROTÉGÉ PAR DES MATÉRIAUX NON COMBUSTIBLES DÉPASSANT DU DESSOUS, DU DEVANT ET DES CÔTÉS DU POÊLE, TEL QU'INDIQUÉ, OU JUSQU'AU MATÉRIAU COMBUSTIBLE LE PLUS PRÈS PERMIS.
COMPOSANTS EN OPTION : VENTILATEUR, ALIMENTATION ÉLECTRIQUE : 115 VOLTS, 60 HZ, 2 AMP.
DANGER : RISQUE D'ÉLECTROCUTION. DÉCONNECTER L'ALIMENTATION ÉLECTRIQUE AVANT DE FAIRE L'ENTRETIEN DU POÊLE. NE PAS INSTALLER LE CORDON ÉLECTRIQUE SOUS OU DEVANT L'APPAREIL.
COMPOSANTS EXIGÉS POUR INSTALLATION DANS UNE MAISON MOBILE : KIT DE PRISE D'AIR EXTÉRIEUR.
AU CANADA : CHEMINÉE HOMOLOGUÉE ULCS 629. UTILISER LES PIÈCES DE LA CHEMINÉE TEL QUE SPÉCIFIÉ DANS LES CONSIGNES D'INSTALLATION.
AUX ÉTATS-UNIS : CHEMINÉE HOMOLOGUÉE UL103HT.
AVERTISSEMENT : UTILISER SEULEMENT LES OPTIONS HOMOLOGUÉES PAR REGENCY COMME LES PATTES, LE DIFFUSEUR AIRMATE, LE VENTILATEUR COMME ILLUTRÉ DANE LE MANUEL D'INSTALLATION.
ATTENTION : COMBUSTION DE TOUT MATÉRIAU NON SPÉCIFIÉ PEUT ENDOMMAGER L'APPAREIL.
ATTENTION : LE DÉPLACEMENT DES PIÈCES PEUT ENTRAÎNER DES BLESSURES.

MINIMUM CLEARANCES TO COMBUSTIBLE MATERIALS
DÉGAGEMENTS MINIMUMS AUX MATÉRIAUX COMBUSTIBLES

F1150 WITH REAR DEFLECTOR OR AIRMATE

MEASURE FROM	HEATER	FLUE CENTER-LINE
RESIDENTIAL INSTALLATION USING SINGLE WALL CONNECTOR		
SIDEWALL	A 330 mm / 13 in	D 635 mm / 25 in
BACKWALL	B 267 mm / 10.5 in	E 433 mm / 17-1/6 in
CORNER	C 229 mm / 9 in	F 532 mm / 21 in
INSTALLATION USING LISTED DOUBLE WALL CONNECTOR - MOBILE HOME		
SIDEWALL	A 279 mm / 11 in	D 584 mm / 23 in
BACKWALL	B 127 mm / 5 in	E 294 mm / 11-9/16 in
CORNER	C 127 mm / 5 in	F 432 mm / 17 in
INSTALLATION USING LISTED DOUBLE WALL CONNECTOR - RESIDENTIAL CLOSE CLEARANCE		
SIDEWALL	A 279 mm / 11 in	D 584 mm / 23 in
BACKWALL	B 127 mm / 5 in	E 294 mm / 11-9/16 in
CORNER	C 127 mm / 5 in	F 432 mm / 17 in
INSTALLATION USING LISTED DOUBLE WALL CONNECTOR - ALCOVE		
SIDEWALL	G 279 mm / 11 in	I 584 mm / 23 in
BACKWALL	H 127 mm / 5 in	J 295 mm / 11-5/8 in

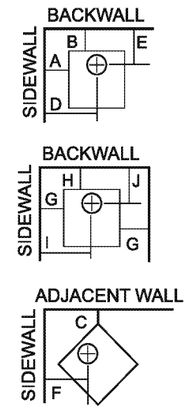

FLOOR PROTECTION*
PROTECTION DE PLANCHER*

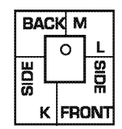

K 405 mm / 16 in
L 200 mm / 8 in
M 200 mm / 8 in

* In Canada, floor protection must extend 18" (450mm) to the front and 8" (200mm) to each side and back of the stove.

* Au Canada, la protection de plancher doit dépasser de 18 po (457 mm) à l'avant et de 8 po (200 mm) de chaque côté du poêle et derrière le poêle.

CAUTION

HOT WHILE IN OPERATION DO NOT TOUCH. KEEP CHILDREN, CLOTHING AND FURNITURE AWAY. CONTACT MAY CAUSE SKIN BURNS. READ NAMEPLATE AND INSTRUCTIONS.

ATTENTION

CHAUD EN COURS DE FONCTIONNEMENT. NE PAS TOUCHER. ÉLOIGNER LES ENFANTS, LES VÊTEMENTS ET LES MEUBLES DE L'APPAREIL. LE CONTACT AVEC L'APPAREIL PEUT OCCASIONNER DES BRÛLURES. LIRE CETTE ÉTIQUETTE ET LES CONSIGNES.

DATE OF MANUFACTURE
2019 2020 2021 2022 2023
JAN FEB MAR APR MAY JUN JUL AUG SEPT OCT NOV DEC

MANUFACTURED BY/ FABRIQUÉ PAR :
FPI FIREPLACE PRODUCTS INTERNATIONAL LTD.
6988 VENTURE ST.
DELTA, BC V4G 1H4

REGENCY FIREPLACE PRODUCTS

MADE IN CANADA / FABRIQUÉ AU CANADA

920-129

Part #: 920-129

Size: 6.95" H x 10.8" W (File at 100%)
Color: black on grey except for the items indicated as being printed in red.

Jun. 24/19: Created decal
July 11/19: Updated clearances
July 31/19: Updated as per Radu
Aug 6/19: Updated clearances

REGENCY®
FIREPLACE PRODUCTS

Cascades™ I1150 Wood Insert

Owners & Installation Manual

www.regency-fire.com

Tested by:
0219WN027S

Installer: Please complete the details on the back cover and leave this manual with the homeowner.
Homeowner: Please keep these instructions for future reference.

920-132 FPI FIREPLACE PRODUCTS INTERNATIONAL LTD. 6988 Venture St., Delta, BC Canada, V4G 1H4 08.01.19

Thank-you for purchasing a
REGENCY FIREPLACE PRODUCT.

The pride of workmanship that goes into each of our products will give you years of trouble-free enjoyment. Should you have any questions about your product that are not covered in this manual, please contact the **REGENCY DEALER** in your area.

"This wood heater has a manufacturer set minimum low burn rate that must not be altered. It is against federal regulations to alter this setting or otherwise operate this wood heater in a manner inconsistent with operating instructions in this manual." Failure to follow the manual details can lead to smoke and CO emissions spilling into the home. It is recommended to have monitors in areas that are expected to generate CO such as heater fueling areas.

"U.S. ENVIRONMENTAL PROTECTION AGENCY Certified to comply with 2020 particulate emission standards using cord wood." Model Regency I1150 – 1.7g /hr.

"This manual describes the installation and operation of the Regency I1150 wood heater. This heater meets the 2020 U.S. Environmental Protection Agency's cord wood emission limits for wood heaters. Under specific test conditions this heater has been shown to deliver heat at rates ranging from 12,800 BTU/hr to 39,100 BTU/hr." Efficiency is determined using the B415 method resulting in lower and higher heat values. This heater generates the best efficiency when operated using well-seasoned wood and installed in the main living areas where the majority of the chimney is within the building envelope.

It is against federal regulation to operate this wood heater in a manner inconsistent with operating instructions in this manual."

"This heater is designed to burn natural wood only. Higher efficiencies and lower emissions generally result when burning air dried seasoned hardwoods, as compared to softwoods or to green or freshly cut hardwoods."

DO NOT BURN:

- Treated wood
- Coal
- Garbage
- Cardboard
- Solvents
- Colored Paper
- Trash
- **Lawn clippings or yard waste**
- **Materials containing rubber including tires**
- **Materials containing plastic**
- **Waste petroleum products , paints or paint thinners or asphalt products**
- **Materials containing asbestos**
- **Construction or demolition debris**
- **Railroad ties**
- **Manure or animal remains**
- **Saltwater driftwood or other previously salt water saturated materials**
- **Unseasoned wood**
- **Paper products, cardboard, plywood or particle board. The prohibition against burning these materials does not prohibit the use of fire starters made from paper, cardboard, saw dust, wax and similar substances for the purpose of starting a fire in a wood heater.**

Burning these materials may result in release of toxic fumes or render the heater ineffective and cause smoke.

The authority having jurisdiction (such as Municipal Building Department, Fire Department, Fire Prevention Bureau, etc.) should be consulted before installation to determine the need to obtain a permit.

This unit must be connected to either a listed factory built chimney suitable for use with solid fuels and conforming to, ULC629 in Canada or UL-103HT in the United States of America. or code approved masonry chimney with flue liner.

I1150 is tested and certified to ULC S628-93, and UL1482-2011 (R2015).

SAVE THESE INSTRUCTIONS

NATIONAL FIREPLACE INSTITUTE NFI CERTIFIED

We recommend that our products be installed and serviced by professionals who are certified in the U.S. by the National Fireplace Institute® (NFI) or in Canada by Wood Energy Technical Training (WETT).

Wood Energy Technical Training

ED_005996_00000513-00235

table of contents

Copy of the Safety Label for I1150 4

Dimensions
with standard flue adaptor 5
with offset flue adaptor 6

Installation
Before Installing Your Insert 7
Chimney Specifications 7
Fireplace Specifications 7
Masonry And Factory Built Fireplace Clearances 8
Installing Your Insert 9
Installation Into a Masonry Fireplace 10
Installation Into a Factory Built Fireplace 10
Faceplate, Trim & Optional 11
Bottom Faceplate & Fan Support Installation 11
Fan / Blower 15
Brick Installation 16
Glass Replacement 17
Wood door & handle assembly 18
Stainless steel smoke deflector Installation 19
Seasoned wood 20
Primary air operating handle 20

Operation
Operating Instructions 21
Draft Control 21
First Fire 21
Ash Disposal 22
Safety Guidelines and Warnings 22

Maintenance
Maintenance 23
Creosote 23
Door Gasket 23
Glass Maintenance 23
Wood Storage 23
Secondary air tube removal / installation 24
Latch Adjustment 24
Removing Wooden Handle 24
Vertical Stainless Deflector Replacement 25

Parts
Main assembly 27
Brick panels 29
Faceplates 30

Warranty
Warranty 32

CAUTION: To avoid burns or wood splinters, when opening/closing the fuel door or adding wood to the fire, You should always wear appropriate protective gloves to protect your hands from the heat being emitted from this fireplace.

ED_005996_00000513-00236

safety decal

Copy of the I1150 Safety Decal

This is a copy of the label that accompanies each **I1150 Wood Insert**. We have printed a copy of the contents here for your review.

NOTE: Regency units are constantly being improved. Check the label on the unit and if there is a difference, the label on the unit is the correct one.

(Duplicate Serial #) 531

LISTED FACTORY BUILT FIREPLACE INSERT CERTIFIED FOR USE IN CANADA AND U.S.A. DO NOT REMOVE THIS LABEL / NE PAS ENLEVER CETTE ÉTIQUETTE

MODEL: I1150
TESTED TO:
0219WN027S **ULC S628-M93 / UL 1482-2011 (R2015)**

REGENCY 531

U.S. ENVIRONMENTAL PROTECTION AGENCY CERTIFIED TO COMPLY WITH 2020 PARTICULATE EMISSION STANDARDS USING CORD WOOD." TESTED TO ASTM E3053. MODEL REGENCY I1150 – 1.7G /HR. THIS WOOD HEATER NEEDS PERIODIC INSPECTION AND REPAIR FOR PROPER OPERATION. CONSULT THE OWNER'S MANUAL FOR FURTHER INFORMATION. IT IS AGAINST FEDERAL REGULATIONS TO OPERATE THIS WOOD HEATER IN A MANNER INCONSISTENT WITH THE OPERATING INSTRUCTIONS IN THE OWNER'S MANUAL.

INSTALL AND USE ONLY IN ACCORDANCE WITH THE MANUFACTURER'S INSTALLATION AND OPERATING INSTRUCTIONS. INSTALL AND USE ONLY IN MASONRY FIREPLACE OR FACTORY BUILT FIREPLACE. CONTACT LOCAL BUILDING OR FIRE OFFICIALS ABOUT RESTRICTIONS AND INSTALLATION INSPECTION IN YOUR AREA.

MINIMUM CLEARANCES TO COMBUSTIBLE MATERIALS (MEASURED FROM INSERT BODY)

ADJACENT SIDEWALL	A) 15in / 380mm
MANTEL	B) 20n / 510mm
TOP FACING	C) 14in / 355mm
SIDE FACING (to side surround)	D) 0.5in / 13mm

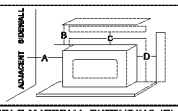

COMBUSTIBLE FLOOR MUST BE PROTECTED BY NON-COMBUSTIBLE MATERIAL EXTENDING (E) 16 IN / 405MM TO FRONT AND (G) 8IN / 205MM TO SIDES FROM FUEL DOOR. IN CANADA MUST EXTEND 18" TO FRONT.
THERMAL INSULATION WITH A R VALUE = 1.4 AT A DISTANCE OF 18" FROM FRONT OF DOOR OPENING FOR CANADA AND 16" FOR USA. IF UNIT RAISED 4.5" FROM FLOOR, NO THERMAL INSULATION IS REQUIRED.

COMPONENTS REQUIRED FOR INSTALLATION: 5.5" (140mm) or 6" (152mm)STAINLESS STEEL LINER LISTED CHIMNEY LINER.
OPTIONAL COMPONENT: FAN PART#172-917, ELECTRICAL RATING: VOLTS 115, 60 HZ, 0.6 AMPS
DANGER: RISK OF ELECTRIC SHOCK. DISCONNECT POWER BEFORE SERVICING UNIT.
DO NOT REMOVE BRICKS OR MORTAR IN MASONRY FIREPLACE. FOR USE WITH SOLID WOOD FUEL ONLY. DO NOT USE GRATE OR ELEVATE FIRE. DO NOT CONNECT THIS UNIT TO A CHIMNEY FLUE SERVING ANOTHER APPLIANCE. BUILD WOOD FIRE DIRECTLY ON HEARTH. OPERATE WITH FEED DOOR CLOSED, OPEN TO FEED FIRE ONLY. REPLACE GLASS ONLY WITH CERAMIC GLASS (5MM). INSPECT AND CLEAN CHIMNEY FREQUENTLY. UNDER CERTAIN CONDITIONS OF USE CREOSOTE BUILD-UP MAY OCCUR RAPIDLY. DO NOT OVERFIRE, IF INSERT GLOWS YOU ARE OVER-FIRING. CAUTION: MOVING PARTS MAY CAUSE INJURY. DO NOT OPERATE UNIT WITH A REMOVED PART OR PARTS.

CERTIFIÉ CONFORME AUX NORMES 2020 DE L'AGENCE AMÉRICAINE DE L'ENVIRONNEMENT EN MATIÈRE D'ÉMISSION DE PARTICULES DE BOIS ASSEMBLÉES (BOIS CORDÉ) SONT UTILISÉES. HOMOLOGUÉ AVEC LA ASTM E3053. MODÈLE REGENCY I1150 –1.7 G /H. CET APPAREIL DE CHAUFFAGE AU BOIS DOIT ÊTRE INSPECTÉ PÉRIODIQUEMENT ET REPARÉ POUR FONCTIONNER CORRECTEMENT. CONSULTER LE MANUEL D'INSTALLATION POUR PLUS D'INFORMATION. LA RÉGLEMENTATION FÉDÉRALE INTERDIT DE FAIRE FONCTIONNER UN TEL APPAREIL SI LES CONSIGNES D'UTILISATION CONTENUES DANS LE PRÉSENT MANUEL NE SONT PAS RESPECTÉES.

D'INSTALLATION ET D'UTILISATION DU FABRICANT. À INSTALLER ET À UTILISER UNIQUEMENT DANS UN FOYER EN MAÇONNERIE OU UN FOYER PRÉFABRIQUÉ.
CONTACTEZ LES AUTORITÉS LOCALES EN BÂTIMENT OU INCENDIE POUR CONNAÎTRE LES RESTRICTIONS D'INSTALLATION ET LES RÈGLES D'INSPECTION DANS VOTRE RÉGION.

DÉGAGEMENTS MINIMAUX AUX MATÉRIAUX COMBUSTIBLES (MESURES PRISES DEPUIS LE CAISSON DE L'ENCASTRABLE)

MUR LATÉRAL ADJACENT	A) 15 po / 380 mm
MANTEAU	B) 20 po / 510 mm
PAREMENT SUPÉRIEUR	C) 14 po / 355 mm
PAREMENT LATÉRAL	D) 0,5 po / 13 mm

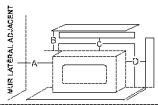

LE PLANCHER COMBUSTIBLE DOIT ÊTRE PROTÉGÉ PAR UN MATÉRIAU NON COMBUSTIBLE S'ÉTENDANT SUR (E) 16 PO / 405MM À L'AVANT ET SUR (G) 8 PO / 205MM ENTRE LES CÔTÉS ET LA PORTE DE CHARGEMENT DU COMBUSTIBLE. PROLONGEMENT SUR 18 PO À L'AVANT AU CANADA. ISOLATION THERMIQUE AVEC UNE VALEUR R = 1,4 À UNE DISTANCE DE 18 PO DEPUIS L'AVANT DE L'OUVERTURE DE LA PORTE AU CANADA ET 16 PO AUX ÉTATS-UNIS. SI L'APPAREIL EST SURÉLEVÉ À 4,5 PO DU SOL, AUCUNE ISOLATION THERMIQUE N'EST REQUISE.

PIÈCES OBLIGATOIRES POUR L'INSTALLATION : GAINE DE CHEMINÉE HOMOLOGUÉE EN ACIER INOXYDABLE DE 5,5 PO (140mm) ou 6 PO (152mm).
PIÈCE EN OPTION : VENTILATEUR PIÈCE N°172-917
CARACTÉRISTIQUES ÉLECTRIQUES : 115 VOLTS, 60 HZ, 0,6 AMPS.
DANGER : RISQUE D'ÉLECTROCUTION. DÉBRANCHER LE COURANT AVANT DE PROCÉDER À L'ENTRETIEN DE L'APPAREIL.
NE PAS RETIRER LES BRIQUES OU LE MORTIER DU FOYER EN MAÇONNERIE. À UTILISER AVEC UN COMBUSTIBLE SOLIDE EN BOIS SEULEMENT. NE PAS UTILISER DE GRILLE NI SURÉLEVER LE FEU. NE PAS CONNECTER CET APPAREIL À UN CONDUIT DE CHEMINÉE DESSERVANT UN AUTRE APPAREIL. FAIRE UN FEU DE BOIS DIRECTEMENT SUR L'ÂTRE. FAIRE FONCTIONNER L'APPAREIL AVEC LA PORTE DE CHARGEMENT FERMÉE. L'OUVRIR SEULEMENT POUR ALIMENTER LE FEU. REMPLACER LA VITRE SEULEMENT AVEC UNE VITRE EN CÉRAMIQUE (5MM). FAIRE INSPECTER ET RAMONER LA CHEMINÉE À INTERVALLES RÉGULIERS. ACCUMULATION RAPIDE DE CRÉOSOTE DANS CERTAINES CONDITIONS. NE PAS SURCHAUFFER : SI L'ENCASTRABLE EST ROUGEOYANT, L'APPAREIL SURCHAUFFE.
ATTENTION : LES PIÈCES AMOVIBLES PEUVENT ENTRAÎNER DES BLESSURES. NE PAS FAIRE FONCTIONNER L'APPAREIL SI UNE OU PLUSIEURS PIÈCES ONT ÉTÉ ENLEVÉES.

ATTENTION / DANGER

HOT WHILE IN OPERATION
DO NOT TOUCH. KEEP CHILDREN, CLOTHING AND FURNITURE AWAY.
CONTACT MAY CAUSE SKIN BURNS.
READ ABOVE INSTRUCTIONS.

APPAREIL CHAUD LORSQU'IL FONCTIONNE.
NE PAS TOUCHER. GARDER À DISTANCE DES ENFANTS, DES VÊTEMENTS ET DU MOBILIER.
TOUT CONTACT PEUT CAUSER DES BRÛLURES.
LIRE LES INSTRUCTIONS CI-DESSUS.

FABRIQUÉ PAR :
FPI FIREPLACE PRODUCTS INTERNATIONAL LTÉE.
6988 VENTURE ST.
DELTA, BC V4G 1H4

920-131

DATE OF MANUFACTURE / DATE DE FABRICATION
MADE IN CANADA / FAIT AU CANADA

JAN	FEB	MAR	APR	MAY	JUN	JUL	AUG	SEPT	OCT	NOV	DEC	
☐	☐	☐	☐	☐	☐	☐	☐	☐	☐	☐	☐	

2019	2020	2021	2022	2023
◯	◯	◯	◯	◯

with standard flue adaptor

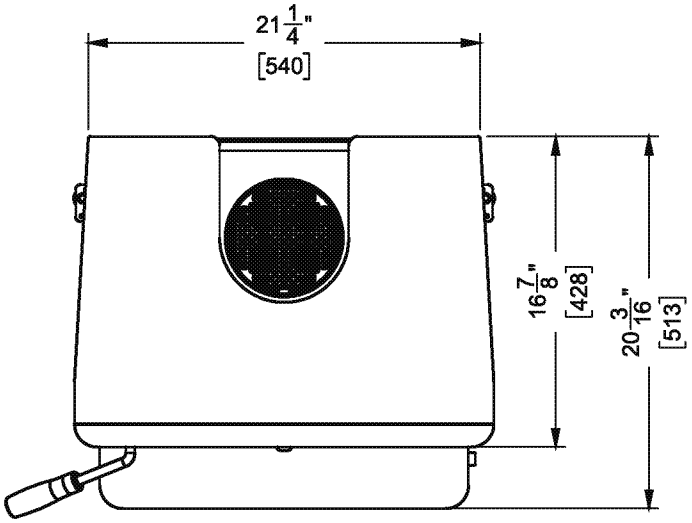

6" (152mm) Diameter
STANDARD FLUE ADAPTOR

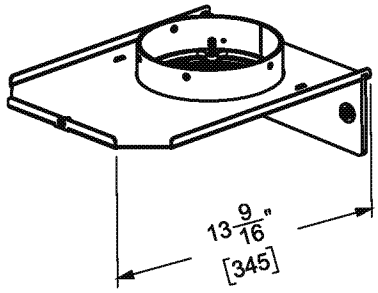

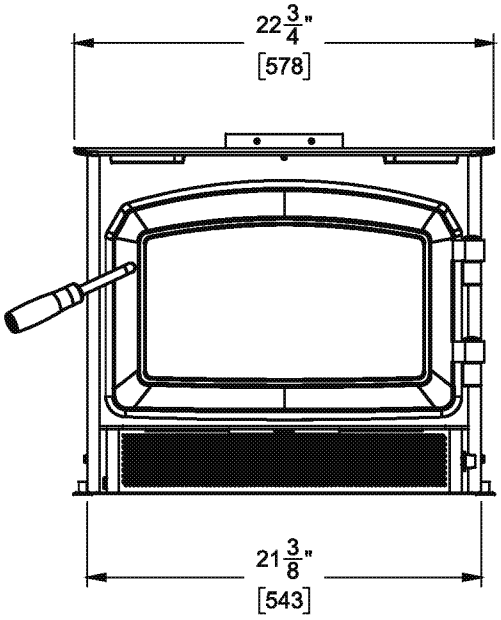

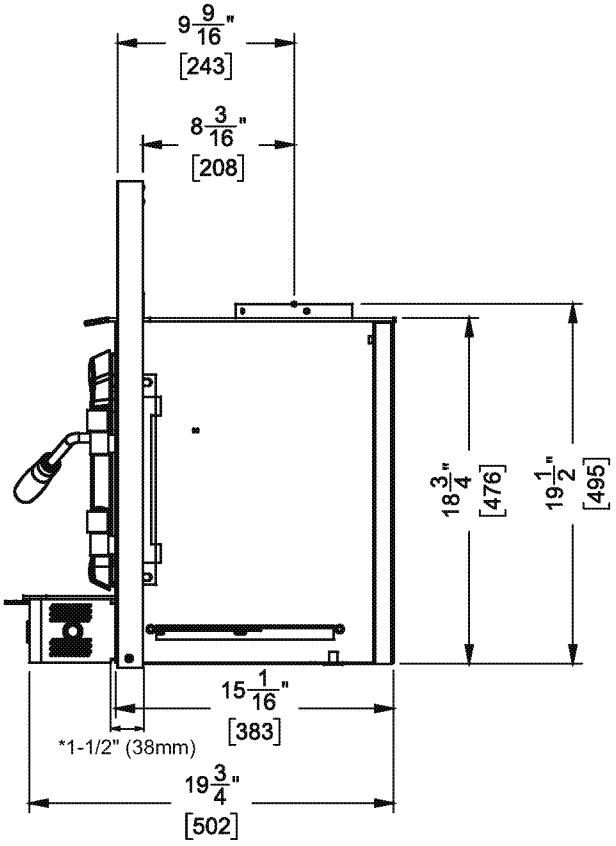

*Measurement from back of faceplate to fuel door opening

Regency Inserts are designed to use either a 5.5" (140mm) or 6" (152mm) flue.

dimensions

with offset flue adaptor

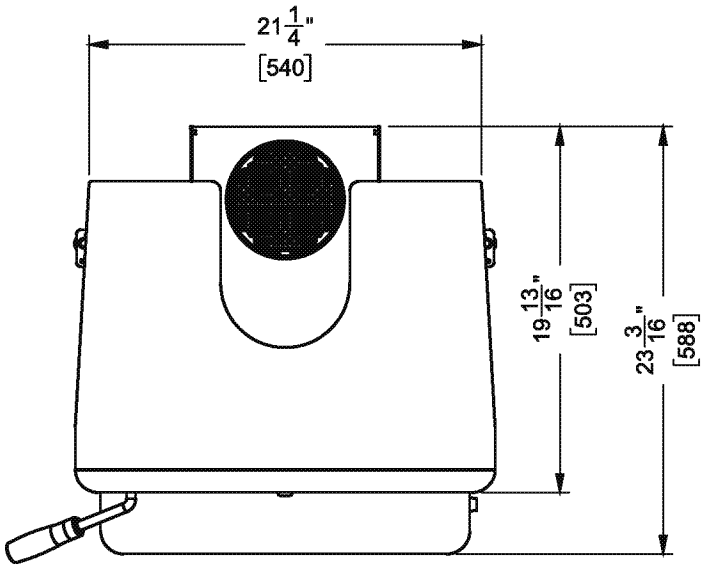

6" (152mm) Diameter
OFFSET FLUE ADAPTOR

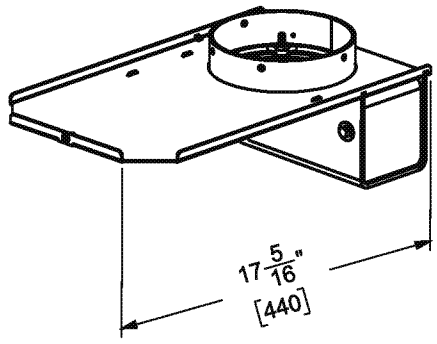

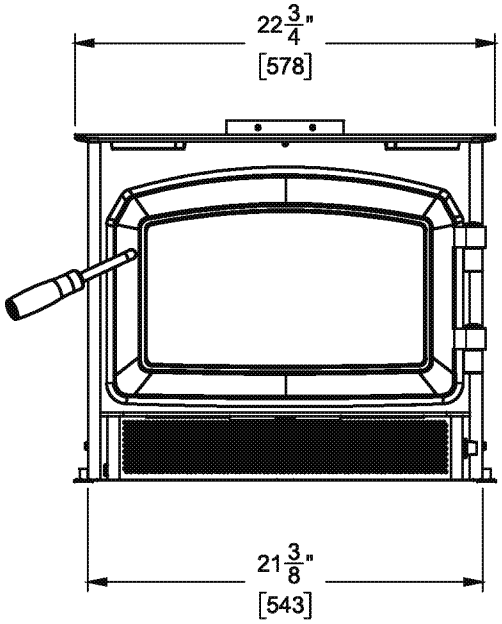

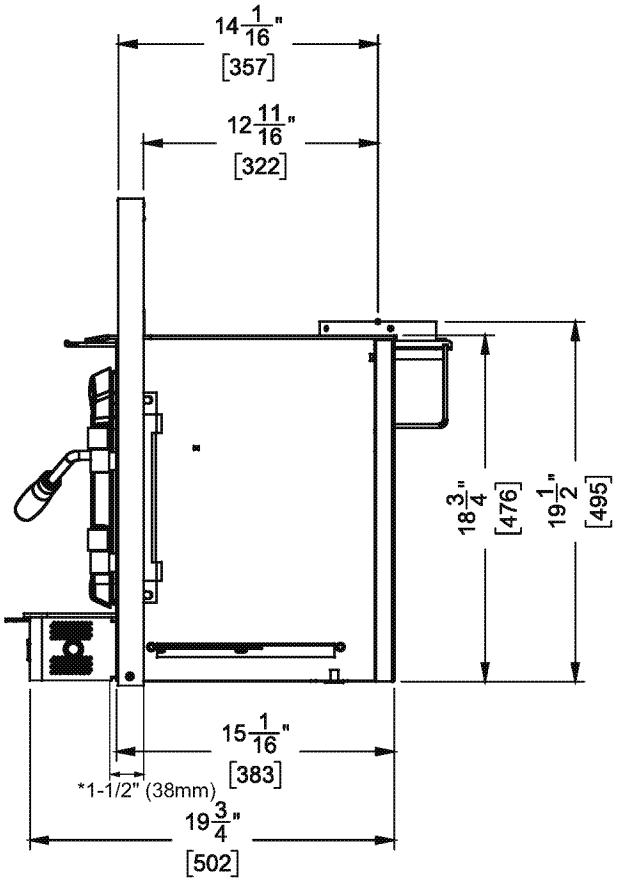

*Measurement from back of faceplate to fuel door opening

Regency Inserts are designed to use either a 5.5" (140mm) or 6" (152mm) flue.

Regency Inserts are constructed with the highest quality materials and assembled under strict quality control procedures that ensure years of trouble free and reliable performance.

It is important that you read this manual thoroughly and fully understand the installation and operating procedures. Failure to follow instructions may result in property damage, bodily injury or even death. The more you understand the way your Regency Insert operates, the more enjoyment you will experience from knowing that your unit is operating at peak performance.

Before Installing Your Insert

1. Read all instructions before installing and using your fireplace insert. Install and use only in accordance with manufacturer's installation and operating instructions.

2. Check your local building codes - Building Inspection Department. You may require a **permit before installing your insert. Be aware that local codes and regulations may override some items in the manual.**

   WARNING: Careless installation is the major cause of safety hazard. Check all local building and safety codes before installation of unit.

3. Notify your home insurance company that you plan to install a fireplace insert.

4. Your fireplace insert is heavy and requires two or more people to move it safely. The insert and surrounding structure can be badly damaged by mishandling.

5. If your existing fireplace damper control will become inaccessible once you have installed your Regency Insert, you should either remove or secure it in the open position.

6. Inspect your fireplace and chimney prior to installing your insert to determine that it is free from cracks, loose mortar or other signs of damage. If repairs are required, they should be completed before installing your insert. Do not remove bricks or mortar from your masonry fireplace.

7. Do not connect the insert to a chimney flue servicing another appliance or an air distribution duct.

WARNING: Cancer and Reproductive Harm
www.P65Warnings.ca.gov
919-874

Chimney Specifications

Before installing, check and clean your chimney system thoroughly. If in doubt about its condition, seek professional advice. Your Regency Insert is designed for installation into a masonry fireplace that is constructed in accordance with the requirements of "The Standard for Chimneys, Fireplaces, Vents, and Solid Fuel Burning Appliance", N.F.P.A. 211, the National Building Code of Canada, or the applicable local code requirements.

The appliance, when installed, must be electrically grounded in accordance with local codes or, in the absence of local codes, with the National Electrical Code, ANSI/NFPA 70, or the Canadian Electrical code, CSA C22.1.

Regency Inserts are designed to use either a 5.5" (140mm) or 6" (152mm) flue.

This insert must be connected to a code-approved masonry chimney or listed factory-built fireplace chimney with a direct flue connector into the first chimney liner section. The chimney size should not be less than or more than three times greater than the cross-sectional area of the flue collar.

Requirements for Installing Solid-fuel Inserts in Factory-built Fireplaces.

1. The insert must be tested and meet the requirements of UL 1482 (U.S.) and or ULC S628 (Canada) when tested in a masonry fireplace built per ULC S628.

2. The factory-built fireplace must be listed per UL 127 or ULC S610.

3. Clearances obtained from the masonry fireplace tests are also relevant for installation in factory-built fireplaces.

4. Installation must include a full height listed chimney liner type HT requirements (2100 degree F.) per UL 1777 (U.S.) or ULC S635 (Canada). The liner must be securely attached to the insert flue collar and the chimney top.

5. Means must be provided to prevent room air passage to the chimney cavity of the fireplace. This may be accomplished by sealing the damper area around the chimney liner, or sealing the fireplace front.

6. Alteration of the fireplace in any manner is not permitted with the following exceptions;

   a. external trim pieces which do not affect the operation of the fireplace may be removed providing they can be stored on or within the fireplace for re-assembly if the insert is removed.

   b. the chimney damper may be removed to install the chimney liner.

7. Circulating air chambers (i.e. in a steel fireplace liner or metal heat circulator) shall not be blocked.

8. Means must be provided for removal of the insert to clean the chimney flue.

9. Inserts that project in front of the fireplace must be supplied with appropriate supporting means.

10. Installer must mechanically attach the supplied label to the inside of the firebox of the fireplace into which the insert is installed.

"**WARNING**: This fireplace has been converted for use with a wood insert only and cannot be used for burning wood or solid fuels unless all original parts have been replaced, and the fireplace re-approved by the authority having jurisdiction."

Fireplace Specifications

Your fireplace opening requires the following minimum sizes:

Height:	19" (483mm)
Width:	23" (584mm)
Depth:	
(w/ standard flue adaptor)	13-3/4" (349mm)
(w/ offset flue adaptor)	16-1/2" (419mm)

Two faceplates are available to seal the fireplace opening:

Standard 38" (965mm)W x 26-3/8" (670 mm)H

Oversize 44" (1118mm) W x 30-3/8" (771mm) H

IMPORTANT:
During the first few fires, a white film may develop on the glass front as part of the curing process. **The glass should be cleaned** or the film will bake on and become very difficult to remove. Use a non-abrasive cleaner and **NEVER** clean the glass while it is hot.

Masonry And Factory Built Fireplace Clearances

The minimum required clearances to combustible materials when installed into a masonry or factory built fireplace are listed below.

Unit I1150	Adjacent Side Wall (to Side) A	Mantel ** (to Top of Unit) B	Top Facing (to Top of Unit) C	Side Facing D	Minimum Hearth Extension* E	Minimum Hearth Side Extension* F	To Top of Unit G
	15" (381mm)	15" (381mm) for 3-1/2" (89mm) mantel	14" (355mm)	1/2"(13mm) to side surround	16" (406mm) USA 18"(457mm) Canada	8" (203mm)	18-3/4"(476mm)
		20" (508mm) for 12"(305mm) mantel					

Note: Side and Top facing is a maximum of 1.5" thick.

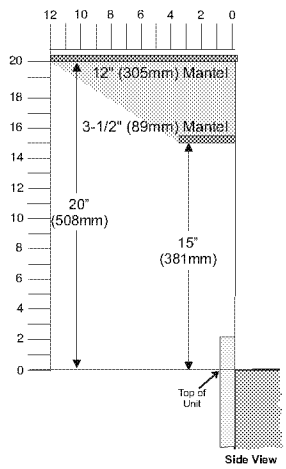

Clearances are critical.

**Mantel can be installed anywhere in shaded area or higher using the above scale.

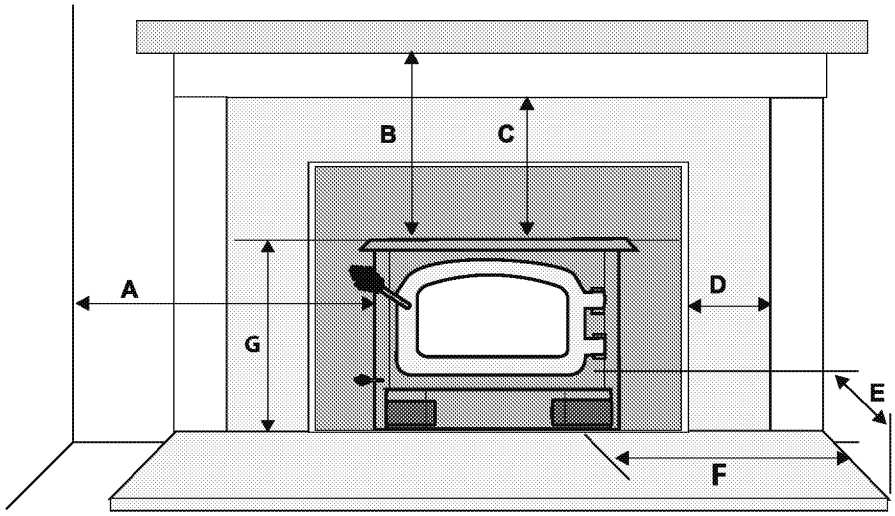

Clearance Diagram for installations

*Floor Protection

Thermal insulation/protection with a R value of 1.4 at a distance of 18" from door opening is required for Canada and 16" for USA.
If unit raised minimum 4.5" from hearth, no thermal protection is required.
Please check to ensure that your floor protection and hearth will meet the standards for clearance to combustibles. Your hearth extension must be made from a non-combustible material. Extending 16" for US and 18" for Canada—measured from the fuel loading door.

Installing Your Insert

SAFETY NOTE: The insert is very heavy and will require two or three people to move it into position. The insert can be made a little lighter by removing the cast iron door by opening it and lifting it off its hinges. Be sure to protect your hearth extension with a heavy blanket or carpet scrap during the installation.

NOTE: You will be required to purchase either the standard or offset 6" diameter (152mm) flue adaptor that is best suited for the specific installation.

List of Tools needed;
- Pull Rod (included with insert)
- 1/2" socket / ratchet
- 3/8 open face wrench

1. Install flex liner into existing chimney as per liner manufacturer's specifications. See Diagram 1.

2. Install the required flue adaptor onto the end of the flex liner. Secure the adaptor using 3 screws - 1 on the front, left and right side as shown in Diagram 2.

   Alignment of the flue adaptor can be critical during the install, it is recommended that the flex liner be left as compressed as possible. Before inserting the unit the adaptor should hang, when level, slightly above the required height.

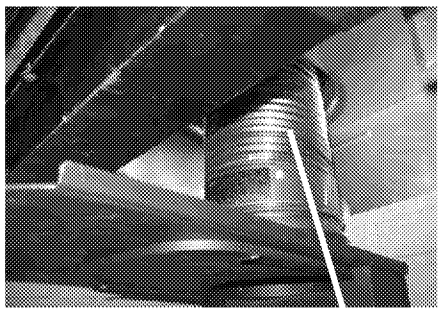

Diagram 1 *Flex Liner*

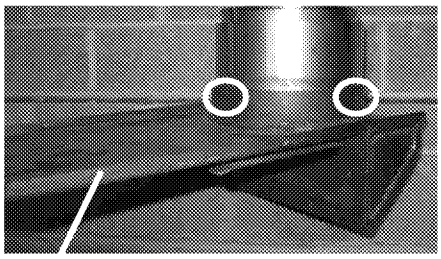

Flue Adaptor *Diagram 2*

Secure adaptor using 3 screws - 1 in the front and 1 each on the left and right side.

3. Install the unit by first setting the rear of the unit into the fireplace. See Diagram 3. Ensure that the unit is centered in the existing fireplace and lined up with the flue adaptor.

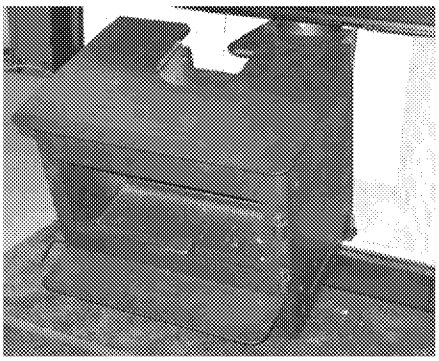

Diagram 3

4. Slide the unit back until the flue adaptor is slightly engaged.

5. At this point it is recommended to level the unit and ensure that the leveling bolts rest on the surface of the fireplace. This will keep the adaptor from binding as the unit is slid into position.

6. Insert the provided pull rod through the hole in the top center of the unit. Secure the threaded end into the flue adaptor as shown in Diagram 4. While sliding the unit into place pull on the rod to ensure that the flue adaptor is properly engaged. See Diagram 5.

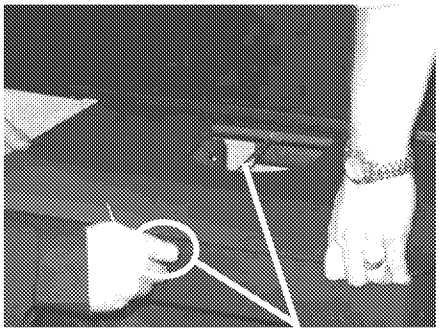

Diagram 4 *Pull Rod*

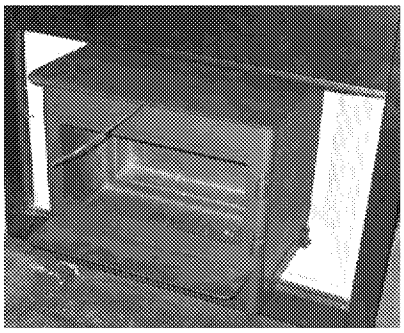

Pull Rod In Place

Diagram 5

7. Ensure that the unit is still level.

8. To complete the installation and to ensure a secure fit and connection of the flue adaptor to the insert, it is essential that the two bolts, flat washers and lock washers (supplied with packaged manual) be installed and tightened using a 1/2" socket as shown in Diagram 6. This prevents the possibility of creosote drip and exhaust gas leakage.

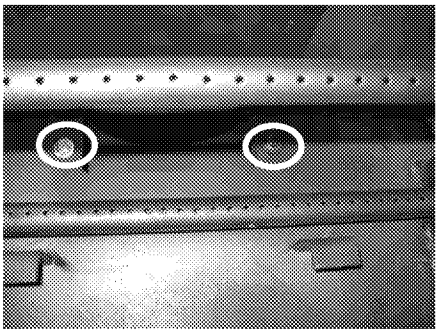

Diagram 6

9. Remove the pull rod from the top center of the fireplace. See Diagram 7.

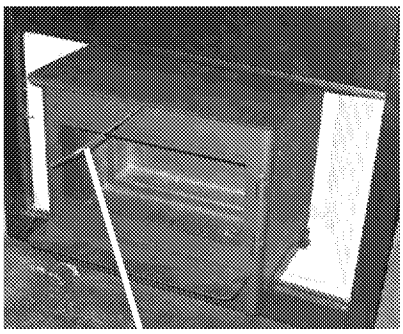

Pull Rod *Diagram 7*

NOTE: The pull rod should not be thrown away. It should be kept if the stove is ever needed to be removed from the fireplace.

10. Re-install the door if removed prior to installation.

ED_005996_00000513-00242

Installation Into a Masonry Fireplace

When referencing installation or connection to masonry fireplaces or chimneys, the masonry construction must or shall be code complying.

The insert must be installed as per the requirements of your local inspection authority.

In Canada this fireplace insert must be installed with a continuous chimney liner of 5.5" (140mm) or 6" (152mm) diameter extending from the fireplace insert to the top of the chimney. The chimney liner must conform to the Class 3 requirements of CAN/ULC-S635 or CAN/ULC-S640, Standard for Lining Systems for New Masonry Chimneys.

Installation Into a Factory Built Fireplace

1. When installed in a factory built fireplace, a full stainless steel rigid or flexible flue liner is mandatory, for both safety and performance purposes. When a flue or liner is in use, the insert is able to breathe better by allowing a greater draft to be created. The greater draft can decrease problems such as, difficult start-ups, smoking out the door, and dirty glass.

2. In order to position the flue liner, the existing rain cap must be removed from your chimney system. In most cases the flue damper should also be removed to allow passage of the liner.

3. In most cases opening the existing spark screens fully should give enough room for the insert installation. If it does not, remove and store.

4. If the floor of your fireplace is below the level of the fireplace opening, adjust the insert's levelling bolts to accommodate the difference. When additional shimming is required, use non-combustible masonry or steel shims.

5. Measure approximately the alignment of the flue liner with the position of the smoke outlet hole on the insert to check for possible offset. If an offset is required, use the appropriate offset adaptor in your installation.

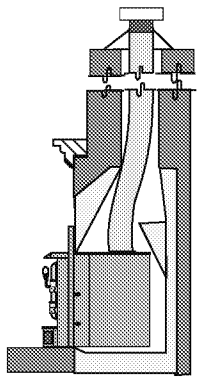

6. Once the above items have been checked, slide your insert into position after first positioning and securing the flue liner to the offset adaptor.

   Attach the rod to the adaptor and slide the adaptor onto the unit as the unit is slid into position. Ensure a positive connection.

   Secure the adaptor to the unit by using 2 bolts, flat washers, lock washers and one screw in the front.

   Re-install raincap at completion of installation.

Draft is the force which moves air from the appliance up through the chimney. The amount of draft in your chimney depends on the length of the chimney, local geography, nearby obstructions and other factors. Too much draft may cause excessive temperatures in the appliance and may cause damage. An uncontrollable burn or excessive temperature indicates excessive draft. Inadequate draft may cause back puffing into the room and plugging of the chimney. Inadequate draft will cause the appliance to leak smoke into the room through appliance and chimney connector joints. Ensure the heater is installed in areas that are not too close to neighbors or in valleys that would cause unhealthy air quality or nuisance conditions.

Faceplate, Trim & Optional Bottom Faceplate & Fan Support Installation

Regular Faceplate Dimensions (shown with bottom faceplate/fan support attached):

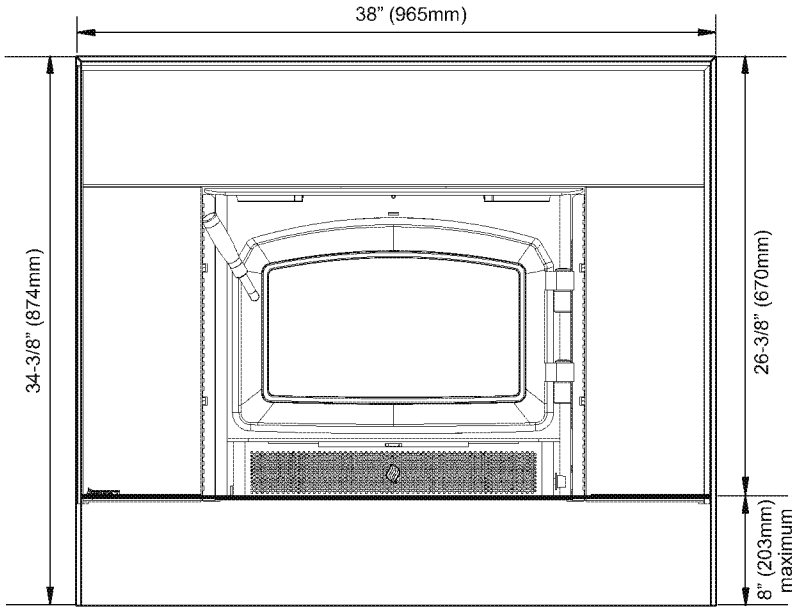

Oversize Faceplate Dimensions (shown with bottom faceplate/fan support attached):

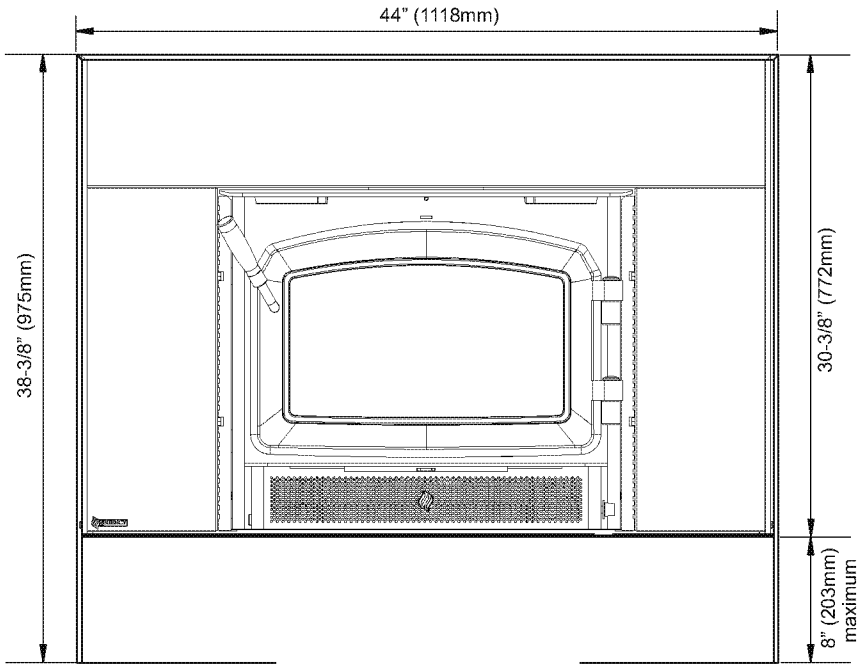

Regular/Oversize Faceplate Installation:

1) Thread the black 1/4" x 3/4" long hex bolts into the faceplate mounting bracket as shown in Diagram 1, leaving them approximately 1/4" out.

2) Fasten the faceplate mounting bracket to the side of the insert using 2 bolts for the top and bottom, see Diagram 1. Repeat for other side.

   NOTE: The bolt and washer come attached to the side of the insert and need to be removed and reused for fastening.

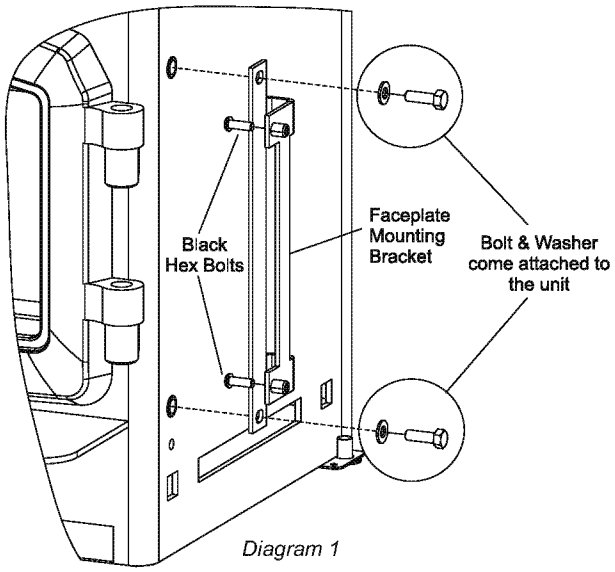

Diagram 1

3) Assemble the faceplate sides and top using the 1/4" x 1/2" long hex bolts, lock washers and nuts provided. Do not tighten. See Diagram 2.
   Install Digital Monitor Operating tool Bracket as shown. See diagram 2A. Tighten all of the bolts. The tool holder can then be slid into the tool bracket as shown.

Optional Regular/Oversize Bottom Faceplate Installation:

4) Position the assembled faceplate side and top to the insert. Ensure to align the draft rod into the opening of the faceplate as well as the side faceplate slots with the bolts in the mounting brackets as shown in Diagram 3.

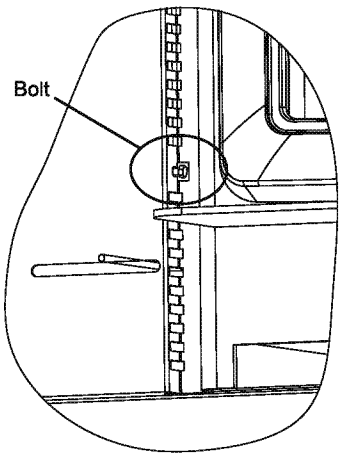

Diagram 3

5) Measure the height between the hearth and the bottom of the side faceplate.

6) Cut the bottom faceplate to the measured height using a metal cutting blade.

7) Remove the faceplate assembly from the insert and attach the cut bottom faceplate to the faceplate sides using the 1/4" x 1/2" long hex bolts, lock washers and nuts provided as shown in Diagram 4.

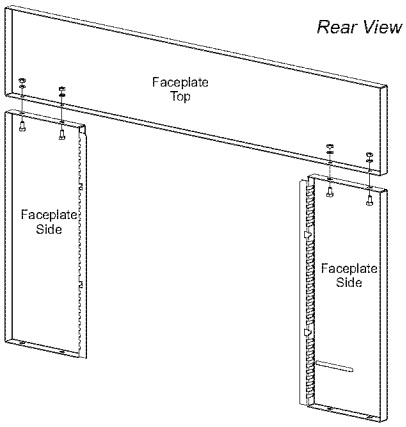

Diagram 2

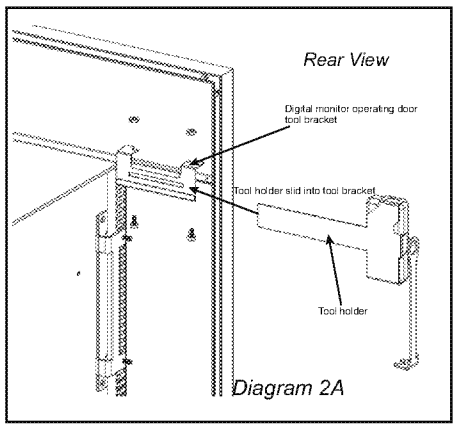

Diagram 2A

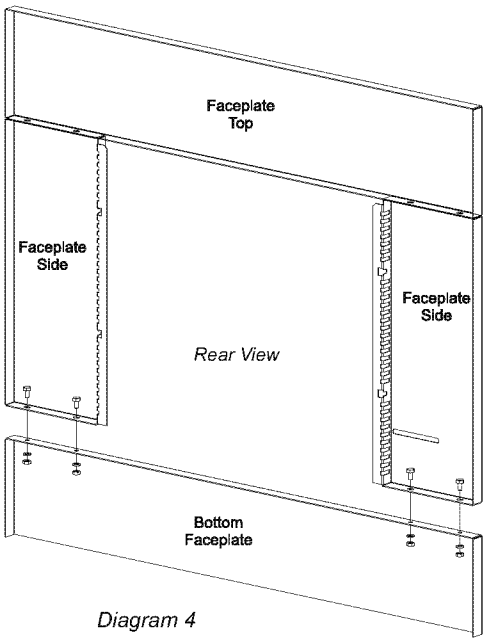

Diagram 4

If the insert is going to sit on the hearth proceed to "Faceplate Trim Installation" (step 8) otherwise continue on to "Bottom Faceplate Installation" (step 4).

Regular/Oversize Faceplate Trim Installation:

(Black Trim included with Regular/Oversize Faceplate or Bottom Faceplate)

8) Assemble the left and right side trim to the top trim using the trim clips provided as shown in Diagram 5.
NOTE: When using the optional bottom faceplate kit (part #171-928 for Regular or 171-930 for Oversize), the kit contains 2 long right/left black trims. These will need to be cut to size depending on the overall height of the faceplate prior to assembling the trims. Use a hack saw with a fine blade or cut off saw to cut the ends of the black trim. The right/left black trim that were supplied with the regular/oversize faceplate can be recycled as it is not required.

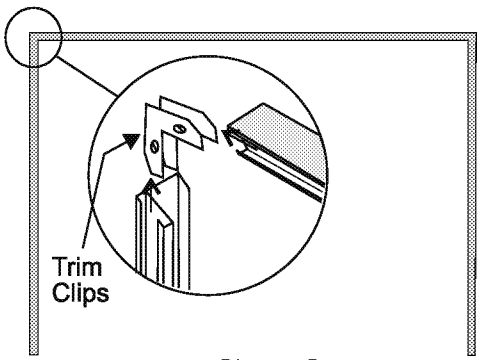

Diagram 5

9) Fit the trim assembly over the faceplate assembly. See Diagram 6.

10) Drill two 5/32" diameter holes through the trim and side panels and screw the trim to the panels using the self tapping screws provided as shown in Diagram 6.

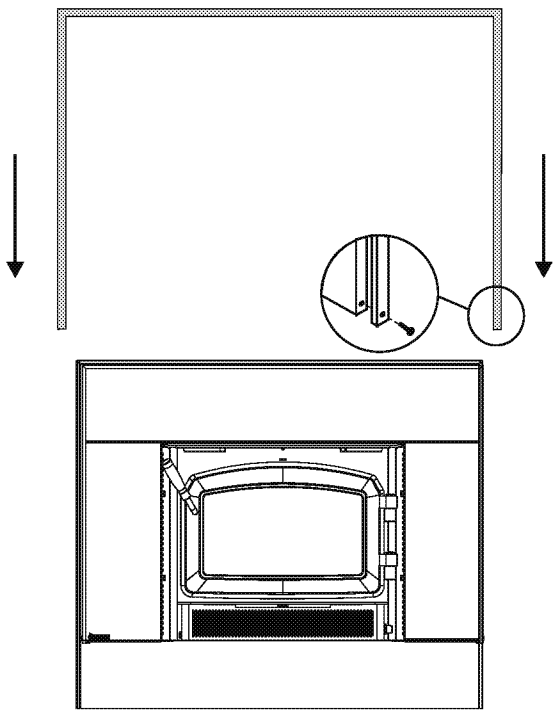

Diagram 6:
Shown with Optional Bottom Faceplate

11) Mount the completed faceplate / trim assembly to the insert. Ensure to align the side faceplate slots with the hex bolts in the mounting brackets and tighten to secure in place.

Fan Installation:

12) Install the fan assembly to ash lip of insert as shown in Diagram 7.

a) Align the fan with the offset clips on the bottom of the ashlip.

b) Slide the supports into the clips. The tension holding the clips in place may be adjusted by increasing or decreasing the offset spacing of the clips.

c) Ensure that the power cord is not in contact with any hot stove surfaces.

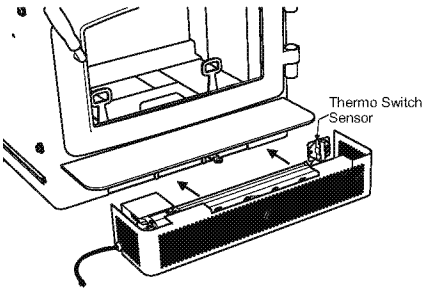

Diagram 7

Optional Fan Support / Bottom Faceplate Installation:

13) To install the optional fan support, measure the distance between the hearth and the bottom surface of the fan housing as shown in Diagram 8.

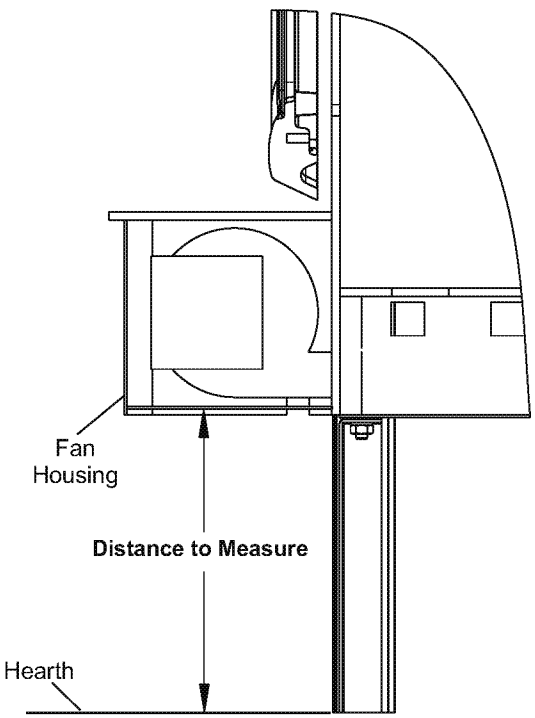

Diagram 8: Side View

14) Cut the bottom edge of the fan support and bottom faceplate (using a metal cutting blade) to the length measured in step 13.

15) Remove the fan assembly from the ash lip of the insert and position the fan support to the bottom of the fan assembly.

16) Drill 4 x 5/32" holes to the underside of the fan assembly using the holes in the fan support as a guide. See Diagram 9.

17) Secure the fan support to the fan assembly using 4 self tapping screws. See Diagram 9.

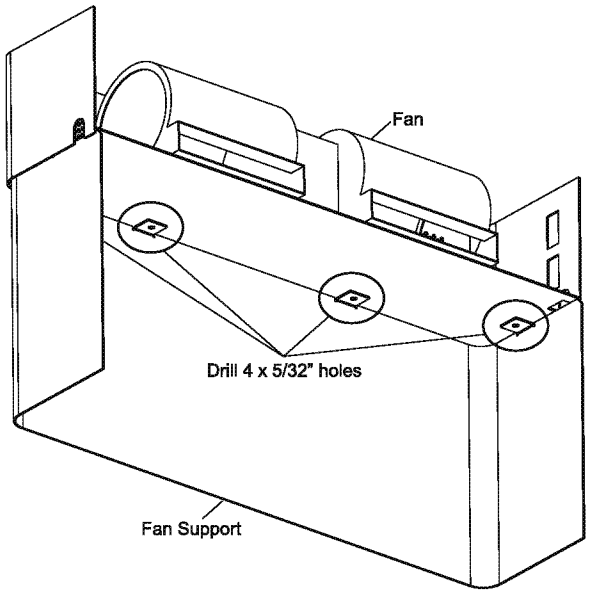

Diagram 9: Rear / Bottom View
Note: Fan not exactly as shown

18) Secure the bottom faceplate to the 3-sided faceplate using the 4 supplied bolts/washers.

19) Discard both side trims that were included with the regular/oversize faceplate and replace with the new extended trims supplied with the fan support/bottom faceplate. Cut to desired length.

20) Fit the trim assembly over the faceplate assembly. See Diagram 6.

21) Drill two 5/32" diameter holes through the trim and side panels and screw the trim to the panels using the self tapping screws provided as shown in Diagram 6.

22) Re-attach the fan/fan support assembly to the ash lip of the insert.

Completed Faceplate Assembly

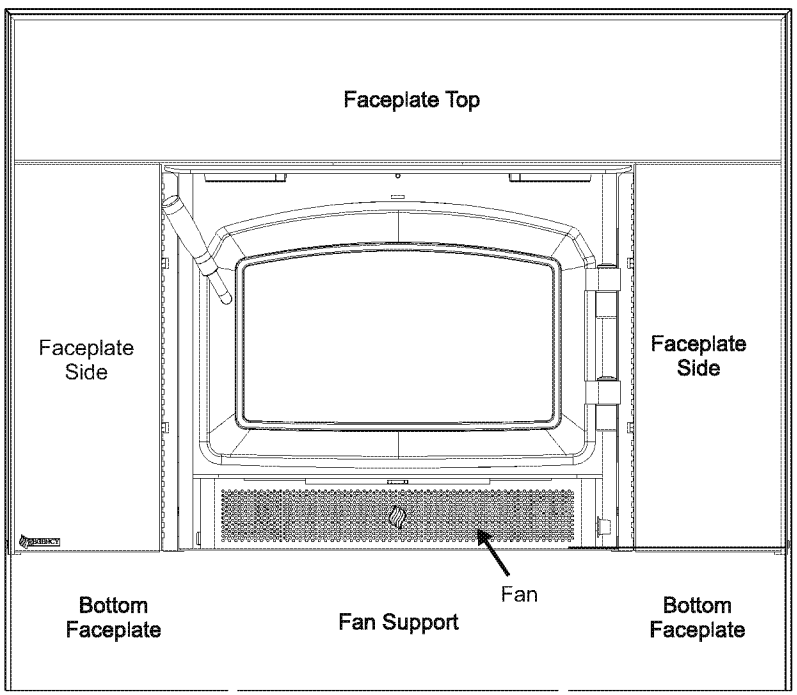

Fan / Blower

The fan should only be installed once the unit is in place in order to prevent any damage to the fan.

Installer: Please record unit serial number here before installing blower.

Serial No._____

Fan assembly for use only with the room heater marked to indicate such use.

FAN INSTALLATION (120V FAN)

Your fan should only be installed once the unit is in place in order to prevent any damage to the fan.

1) Align the fan support with the offset clip on the bottom of the ashlip.

2) Slide the supports into the clips. The tension holding the clips in place may be adjusted by increasing or decreasing the offset spacing of the clips.

3) Ensure that the power cord is not in contact with any hot stove surfaces.

WARNING: FAN ASSEMBLY MUST BE DISCONNECTED FROM THE SOURCE OF ELECTRICAL SUPPLY BEFORE ATTEMPTING THE INSTALLATION.

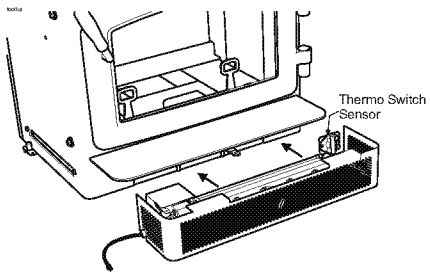

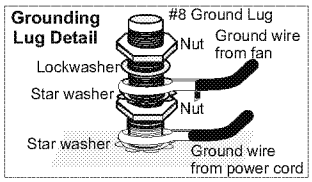

FAN OPERATION

The fan is controlled by a rheostat which allows control of the heat output.

The fan will turn on as the stove has come up to operating temperature. It will also shut the fan system off after the fire has gone out and the unit cooled to below a useful heat output range.

If the fan cycles on and off continuously the thermo switch sensor is not making contact with the stove body. Remove the fan, bend the bracket closer to the stove and re-install the fan.

The fan is to be operated in the <LOW> position when burning in the LOW - MED LOW heat output setting and on <HIGH> when burning in the MED-HIGH settings.

WARNING: Electrical Grounding Instructions
This appliance is equipped with a three pronged (grounding) plug for your protection against shock hazard and should be plugged directly into a properly grounded three-prong receptacle. Do not cut or remove the grounding prong from this plug.

CAUTION: Label all wires prior to disconnection when servicing controls. Wiring errors can cause improper and dangerous operation.

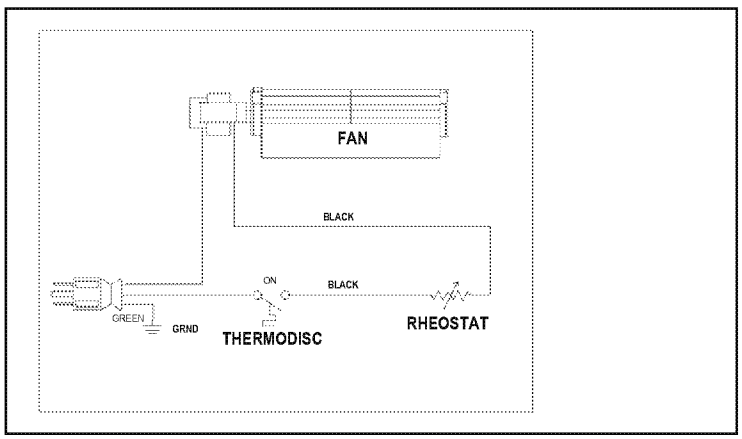

Wiring Diagram

Brick Installation

Firebrick is included to extend the life of your stove and radiate heat more evenly. Check to see that all firebricks are in their correct positions and have not become misaligned during shipping. Install all firebricks (if bricks were removed at install) per the Diagram below and place in their correct positions.
Do not use a grate.

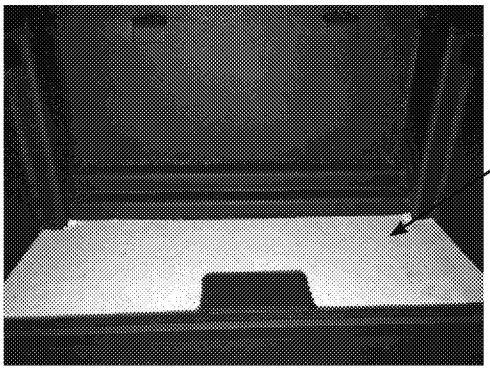

Order of firebrick install:

a) Rear Firebrick
b) Firebox floor - install brick over LyTherm Sheet
c) Right and left side Firebricks

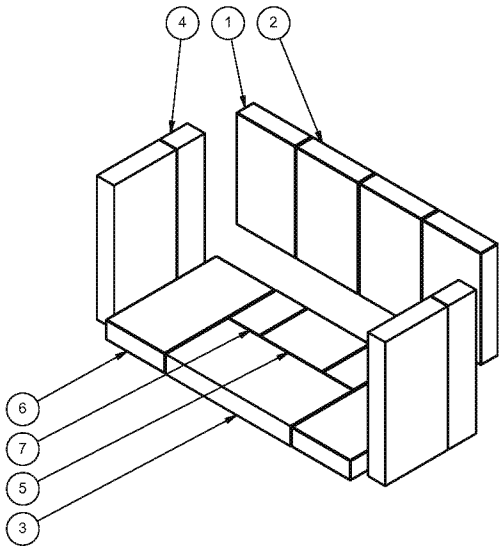

Fire bricks	
#	Size
1	4-1/4" x 7"
2	4-1/2" x 7"
3	9" x 4-1/2"
4	9" x 2"
5	3-1/2" x 4-1/2"
6	4-1/4" x 8"
7	3-1/2" x 2-1/4"

Glass Replacement

Your Regency stove is supplied with 5 mm Neoceram ceramic glass that will withstand the highest heat that your unit will produce. In the event that you break your glass by impact, purchase your replacement from an authorized Regency dealer only.

Remove the door from the stove and remove the screws securing the glass retainer. Position the glass in the door, make sure that the glass gasketing will properly seal your unit, and replace the retainer, it should rest on the gasket not the glass. Tighten securely, but do not wrench down on the glass as this may cause the glass to break.

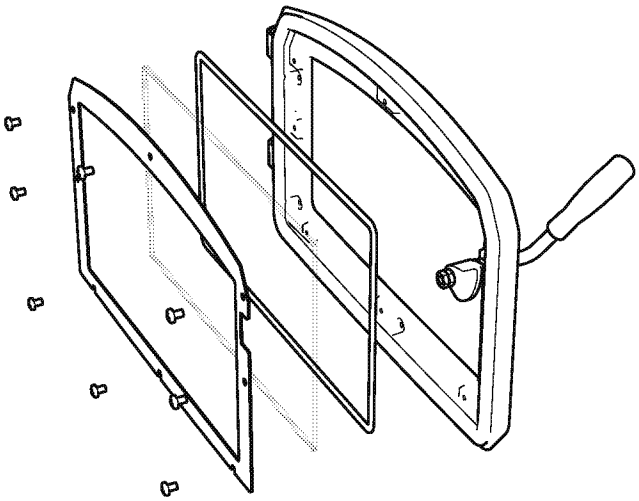

wood door & handle assembly

1. In preparation of installing the door handle, the nuts, cam, washers and spacer must be removed as shown in Diagram 1.

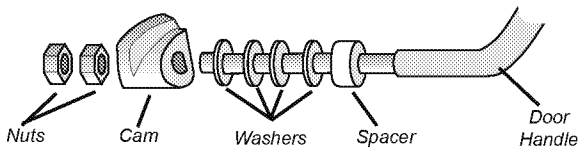

Diagram 1

LATCH ADJUSTMENT

The door latch may require adjustment as the door gasket material compresses over time. Removal of 1 or 2 washers will allow the latch to move closer to the door frame, causing a tighter seal. (Refer to Diagram 1)

2. Place the door onto the hinges and then place the door handle through the opening on the door, as shown in Diagram 2.

   Re-assemble and secure the door handle components in reverse order as removed in step 1, refer to Diagram 1.

3. Put the hinge cover caps on top of hinges to complete the door installation.

Note: The bottom of the door may scrape the ashlip. In this case place the spacers provided on the door hinges of the unit before placing the door.

4. Close door and ensure there is a tight seal. If door is too tight a washer can be removed. Recheck door to ensure there is still a tight seal. The handle should be approximately in the 8 o'clock position when door is fully closed. (Diagram 3)

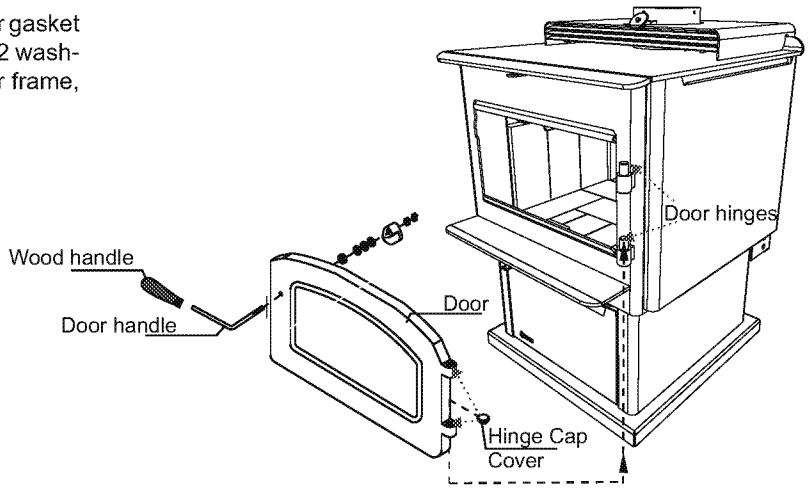

Diagram 2

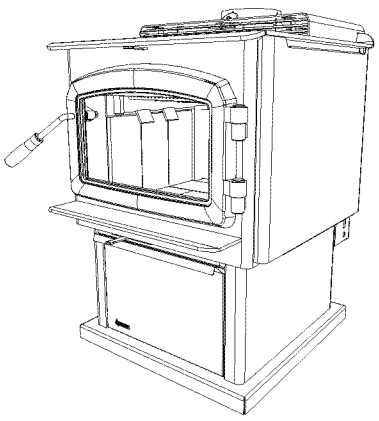

Diagram 3

Stainless steel smoke deflector installation

The stainless smoke deflector is located in the upper front area of the firebox. The deflector is held in place with 2 bolts
Prior to the first fire, ensure deflector is seated properly and secured with 2 hand tightened bolts which are accessible from behind the smoke deflector.

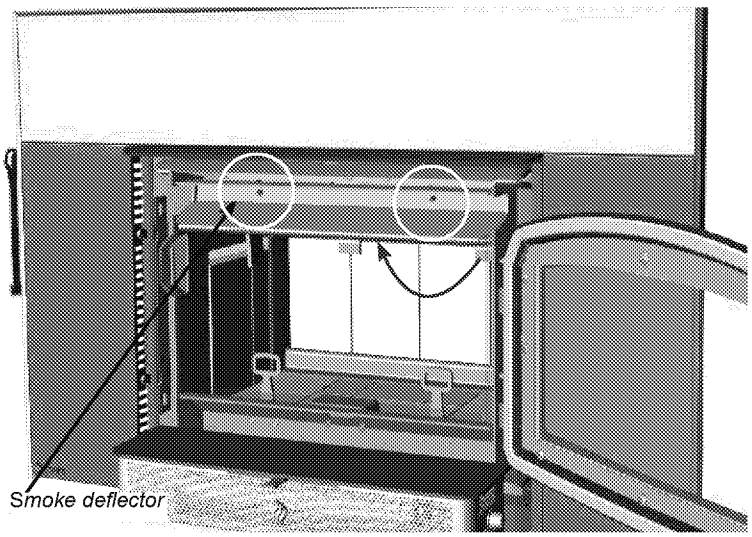

Smoke deflector is installed through the door opening in location shown in Diagram

To replace the deflector, loosen off both bolts and slide deflector downward, push deflector to the back wall of the unit and manoeuver out.
Install new deflector and hand tighten bolts.
Ensure positive location of the deflector prior to hand tightening.

WARNING: Operation of the unit with out proper installation of smoke deflector will void warranty.

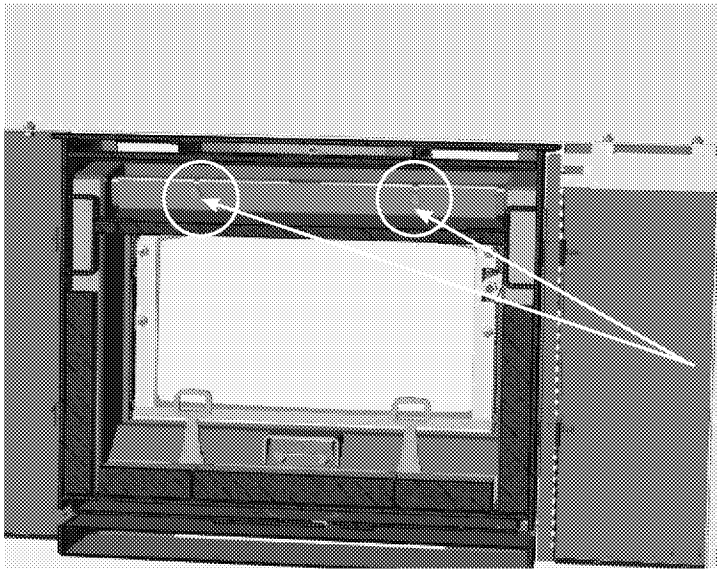

Ensure deflector is seated so bolts are seated at the bottom of the slot before tightening.

Smoke deflector installed with 2 bolts.

Note: *This is a cutaway view from the back of the unit*

seasoned wood

Whether you burn wood in a fireplace, stove or insert, good quality firewood is the key to convenience, efficiency and safety. Wet wood and pieces that are not the right size and shape for your wood burner can be frustrating, burn inefficiently and deposit creosote that can fuel a dangerous chimney fire. Good planning, seasoning and storage of the firewood supply are essential to successful wood burning.

- Stack the wood in separate rows in an open location where the summer sun can warm it and breezes can carry away the moisture. Do not stack unseasoned wood tightly in an unvented storage area.
- Do not allow firewood to lie on the ground for more than a couple of days before stacking. Mould and rot can set in quickly.
- Stack the wood up off the ground on poles, lumber rails or pallets.
- The top of the pile can be covered to keep off rain, but do not cover the sides.

Softer woods like pine, spruce and poplar/aspen that is cut, split and stacked properly in the early spring maybe be ready for burning in the fall. Extremely hard woods like oak and maple, and large pieces of firewood, may take a minimum of a full year to dry enough. Drying may also take longer in damp climates

There are a few ways to tell if wood is dry enough to burn efficiently. Use as many indicators as possible to judge the dryness of the firewood your are considering. Here are ways to judge firewood moisture.

- Using a moisture meter, select the species of fuel and then penetrate the pins into a split piece. Ideal moisture and seasoned firewood should be less than 20% moisture content.
- Checks or cracks in the end grain can be an indication of dryness, but may not be a reliable indicator. Some wet wood has checks and some dry wood has no checks.
- The wood tends to darken from white or cream colour to grey or yellow as it dries.
- Two dry pieces banged together sound hollow; wet pieces sound solid and dull.
- Dry wood weighs much less than wet wood.
- Split a piece of wood. If the exposed surface feels damp, the wood is too wet to burn.

primary air operating handle

The I1150 is supplied with a primary air operating handle. The handle is used to adjust the air control for the desired heat output.

Install the operating handle storage bracket on the top left side (facing back of unit) of the faceplate. Loosen the two 7/16" bolts and slide bracket in and retighten bolts. Diagrams below show bracket already installed.

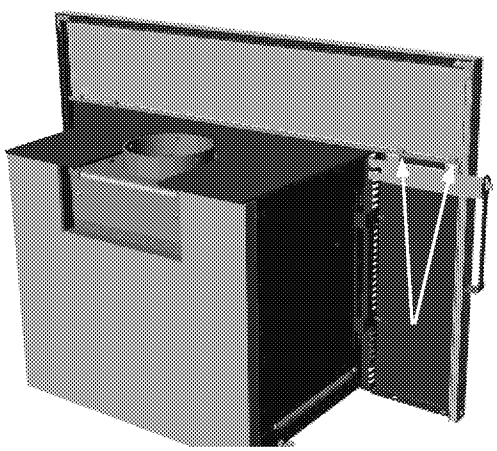

Loosen these two bolts and slide in the bracket.

ED_005996_00000513-00253

Operating Instructions

With your unit now correctly installed and safety inspected by your local authority, you are now ready to start a fire. Before establishing your first fire, it is important that you fully understand the operation of your draft control.

WARNING
Fireplace Stoves equipped with doors should be operated only with doors fully closed. If doors are left partly open, gas and flame may be drawn out of the fireplace stove opening, creating risks from both fire and smoke.

Draft Control

Both the primary and air wash drafts are controlled by the control slide located on the front left side of the unit (when facing the unit). To increase your draft —slide to the left to open, and to decrease—slide to the right to close. The I1150 unit has a secondary draft system that continually allows combustion air to the induction ports at the top of the firebox.

Draft is the force which moves air from the appliance up through the chimney. The amount of draft in your chimney depends on the length of the chimney, local geography, nearby obstructions and other factors. Too much draft may cause excessive temperatures in the appliance. Inadequate draft may cause back puffing into the room and plugging of the chimney.

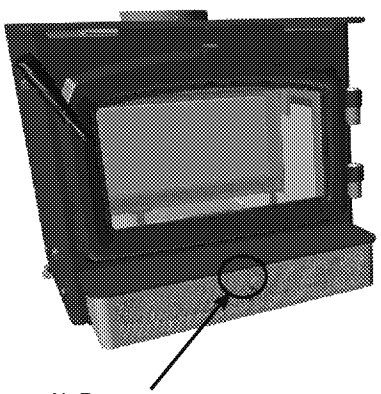

Primary Air Damper
Left - Open Right - Closed

WARNING: To build a fire in ignorance or to disregard the information contained in this section can cause serious permanent damage to the unit and void your warranty!

First Fire

When your installation is completed and inspected you are ready for your first fire.

THIS UNIT IS DESIGNED TO BURN SEASONED CORDWOOD ONLY. COAL AND BRIQUETTES ARE NOT APPROVED.

1. Open firebox door and build a small fire using paper and dry kindling on the firebrick hearth, **DO NOT USE A GRATE. CAUTION: DO NOT BUILD FIRE TOO CLOSE TO GLASS.** Secure door on the firebox and wait a few minutes for a good updraft in the flue to establish the fire. (Leaving the door slightly open will help your fire start more rapidly.)

   CAUTION: Never leave unit unattended if door is left open. This procedure is for fire start-up only, as unit may overheat if door is left open for too long.

2. Add two or three seasoned logs to your fire. Form a trench in the ash bed to allow air to reach the rear of the firebox prior to closing the door. Build fire slowly.

   WARNING: Never build a roaring fire in a cold stove. Always warm your stove up slowly!

3. During the first few fires, keep the combustion rate at a moderate level and avoid a large fire. Only after 5 or 6 such fires can you operate the stove at its maximum setting, and only after the metal has been warmed. Always build up the fire slowly.

4. For the first few days, the stove will give off an odour from the paint. This is to be expected as the high temperature paint becomes seasoned. Windows and/or doors should be left open to provide adequate ventilation while this temporary condition exists. Burning the stove at a very high temperature the first few times may damage the paint. Burn fires at a moderate level the first few days.

5. Do not place anything on the stove top during the curing process. This may result in damage to your paint finish.

6. During the first few days it may be more difficult to start the fire. As you dry out your firebrick and your masonry flue, your draft will increase.

7. For those units installed at higher elevations or into sub-standard masonry fireplaces, drafting problems may occur. Consult an experienced dealer or mason on methods of increasing your draft.

8. Some cracking and popping noises may be experienced during the heating up process. These noises will be minimal when your unit reaches temperature.

10. All fuel burning appliances consume oxygen during operation. It is important that you supply a source of fresh air to your unit while burning. A slightly opened window is sufficient for the purpose. If you also have a fireplace in your home, a downdraft may be created by your Regency Stove causing a draft down your chimney. If this occurs, slightly open a window near your unit.

WARNING: If the body of your unit, or any part of the chimney connector starts to glow, you are over firing. Stop loading fuel immediately and close the draft control until the glow has completely subsided.

11. If you have been burning your stove on a low draft, use caution when opening the door. Open the door a crack, and allow the fire to adjust before fully opening the door.

12. The controls of your unit or the air supply passages should not be altered to increase firing for any reason.

13. If you burn the unit too slowly or at too low a setting your unit will not be operating as efficiently as it can. An easy rule of thumb says that if your glass is clean, then your flue is clean and your exhaust is clean. Burn the stove hot enough to keep your glass clean, you won't need to clean your flue as often.

How to Light & Maintain a Wood Stove Fire

FAN OPERATION

Automatic
To operate the fan - turn on the rheostat.

This will allow the fan to turn on as the stove has come up to operating temperature. It will also shut the fan system off after the fire has gone out and the unit cooled to below a useful heat output range.

Operate the fan in the low speed position when burning in the LOW-MED LOW heat output ranges and operate in the high setting for MED-HIGH to HIGH heat outputs.

Route power cord to either left or right behind unit.

Ash Disposal

During constant use, ashes should be removed every few days.

Ashes should be placed in a metal container with a tight-fitting lid. The closed container of ashes should be placed on a noncombustible floor or on the ground, well away from all combustible materials, pending final disposal. If the ashes are disposed of by burial in soil or otherwise locally dispersed, they should be retained in the closed container until all cinders have thoroughly cooled.

Safety Precautions

1. Do not allow ashes to build up to the loading doors! Only remove ashes when the fire has died down. Even then, expect to find a few hot embers.
2. Please take care to prevent the build-up of ash around the start-up air housing located inside the stove box, under the loading door lip.
3. Never start a fire if the ash plug and ash drawer are not in place. This will cause over firing which can cause excessive warping of the stove. Evidence of over firing can void the warranty on your stove.
4. The firebricks are brittle and can be damaged if the plug is replaced carelessly or pieces that are too large are forced through the hole.

Safety Guidelines and Warnings

CAUTION: do not use chemicals as fluids to start fire.

1. **CAUTION:** Never use gasoline, gasoline type lantern fuels, kerosene, charcoal lighter fuel, or similar liquids to start or 'freshen up' a fire in your heater. Keep all such liquids well away from the heater while it is in use.
2. Keep the door closed during operation and maintain all seals in good condition.
3. Do not burn any quantities of paper, garbage, and never burn flammable fluids such as gasoline, naptha or engine oil in your stove.
4. If you have smoke detectors, prevent smoke spillage as this may set off a false alarm.
5. Do not overfire heater. If the chimney connector, flue baffle or the stove top begin to glow, you are over firing. Stop adding fuel and close the draft control. Over firing can cause extensive damage to your stove including warping and premature steel corrosion. Over firing will void your warranty.
6. Do not permit creosote or soot build-up in the chimney system. Check and clean chimney at regular intervals. Failure to do so can result in a serious chimney fire.
7. Your Regency stove can be very hot. You may be seriously burned if you touch the stove while it is operating, keep children, clothing and furniture away. Warn children of the burn hazard.
8. The stove consumes air while operating, provide adequate ventilation with an air duct or open a window while the stove is in use.
9. Do not connect this unit to a chimney flue serving another appliance.
10. Do not use grates or andirons or other methods for supporting fuel. Burn directly on the bricks.
11. Open the draft control fully for 10 to 15 seconds prior to slowly opening the door when refuelling the fire.
12. Do not connect your unit to any air distribution duct.
13. This heater is designed to burn natural wood only. Higher efficiencies and lower emissions generally result when burning air dried seasoned hardwoods, as compared to softwoods or to green or freshly cut hardwoods.
14. In the event of component failure, replace parts with only Regency listed parts.
15. Warning: do not abuse glass door such as striking or slamming shut.

CAUTION: HOT WHILE IN OPERATION. KEEP CHILDREN, CLOTHING AND FURNITURE AWAY. CONTACT MAY CAUSE SKIN BURNS.

DO NOT BURN:

- Treated wood
- Coal
- Garbage
- Cardboard
- Solvents
- Colored Paper
- Trash
- Salt drift wood
- Cut lumber, plywood, mill ends.

Burning treated wood, garbage, solvents, colored paper or trash may result in release of toxic fumes. Burning coal, cardboard, or loose paper can produce soot, or large flakes of char or fly ash, causing smoke spillage into the room.

CAUTION: DO NOT BURN GARBAGE OR FLAMMABLE LIQUIDS SUCH AS GASOLINE, NAPTHA OR ENGINE OIL. SOME FUELS COULD GENERATE CARBON MONOXIDE AND ARE VERY DANGEROUS.

CAUTION: DO NOT CONNECT TO, OR USE IN CONJUNCTION WITH ANY AIR DISTRIBUTION DUCT WORK UNLESS SPECIFICALLY APPROVED FOR SUCH INSTALLATION.

Cleaning & Maintaining Your Wood Stove

Maintenance

It is very important to carefully maintain your fireplace stove, including burning seasoned wood and maintaining a clean stove and chimney system. Have the chimney cleaned before the burning season and as necessary during the season, as creosote deposits may build up rapidly. Moving parts of your stove require no lubrication.

Creosote

When wood is burned slowly, it produces tar and other organic vapours combine with moisture to form creosote. The creosote vapours condense in the relatively cool chimney flue of a slow burning fire. As a result, creosote residue accumulates on the flue lining. When ignited, this creosote can result in an extremely hot fire.

The chimney connector and chimney should be inspected at least once every two months during the heating season to determine if creosote build up has occurred. If creosote has accumulated it should be removed to reduce the risk of chimney fire.

CAUTION: Things to remember in case of a chimney fire:

1. Close all draft controls.

2. CALL THE FIRE DEPARTMENT.

Ways to Prevent and Keep Unit Free of Creosote

1) Burn stove with the draft control wide open for about 10-15 minutes every morning during burning season.

2) Burn stove with draft control wide open for about 10-15 minutes every time you apply fresh wood. This allows the wood to achieve the charcoal stage faster and burns up any unburned gas vapours which might otherwise be deposited within the system.

3) **Only burn seasoned wood!** Avoid burning kiln dried, wet or green wood. Seasoned wood has been dried at least one year.

4) A small hot fire is preferable to a large smouldering one that can deposit creosote within the system.

5) The chimney and chimney connector should be inspected at least once every two months during the heating season to determine is a creosote buildup has occurred.

6) **Have chimney system and unit cleaned by competent chimney sweeps twice a year during the first year of use and at least once a year thereafter or when a significant layer of creosote has accumulated (3 mm/1/8" or more) it should be removed to reduce the risk of a chimney fire.**

Door Gasket

If the door gasket requires replacement 5/8" diameter material must be used. Regency uses a gasket rope 7/8" (Part #846-570). A proper high temperature gasket adhesive is required. See your Regency Dealer.
The door catch may require adjustment as the door gasket compresses after a few fires. The door latch compression may require adjustment to renew seal. Removal of a shim, (see section in this manual), will allow the latch to be moved closer to the door frame, causing a tighter seal.

Glass Maintenance

Your Regency stove is supplied with 5mm Neoceram ceramic glass (Part #846-306) that will withstand the highest heat that your unit will produce. In the event that you break your glass by impact, purchase your replacement from an authorized Regency dealer only, and follow our step-by-step instructions for replacement (refer to Glass Replacement section).

Allow the stove to cool down before cleaning the glass. Cleaning the glass will prevent build up of carbon and allow full view of the fire.
WARNING: Do not clean the glass when it is hot.
WARNING: Do not use abrasive cleaners, a damp cloth and glass cleaner is effective.

Wood Storage

Store wood under cover, such as in a shed, or covered with a tarp, plastic, tar paper, sheets of scrap plywood, etc., as uncovered wood can absorb water from rain or snow, delaying the seasoning process.

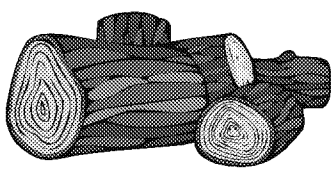

secondary air tube removal / installation

1. Allow the stove to burn out and cool down, until cool to touch.

2. Open stove door to access secondary air tubes.

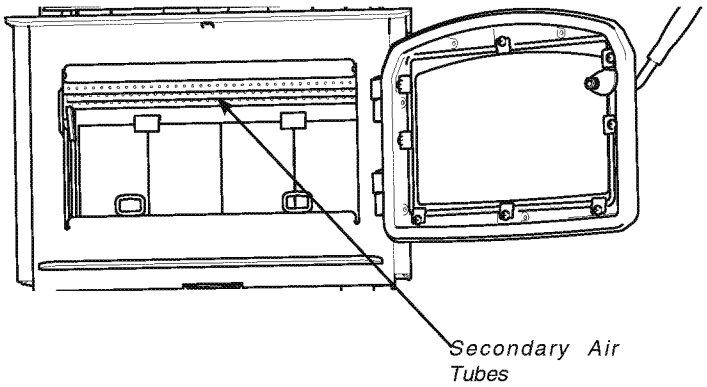

3. Grasp secondary air tube firmly with vise grips, using a hammer tap vise grips from right to left until air tube is released from grip. Remove.

4. Remove top left and right metal retainers, followed by the fragile three piece C-Cast Baffles, then remove the remaining 2 tubes.

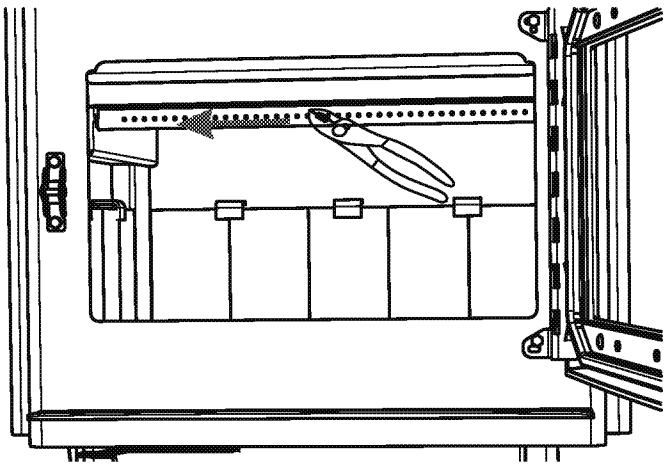

5. To reinstall or replace, first slide left side of tube into hole on left side air channel. Align tab on right side air channel with notch on right hand end of air tube. Firmly grip center of air tube with vise grips, use hammer to tap vise grips from left to right until the tube bottoms out into the air channel on right.

Latch Adjustment

The door latch may require adjustment as the door gasket material compresses after a few fires. Removal of the spacer washer, shown in the Diagram below, will allow the latch to be moved closer to the door frame, causing a tighter seal. Remove and replace the nuts, washer and spacer as shown.

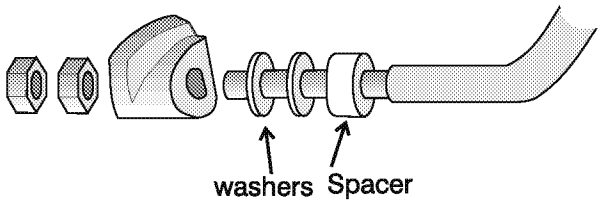

Removing Wooden Handle

1. To remove the wooden door handle from unit, firstly locate 7/64" Allen key hole at the bottom of wooden handle.

2. Unscrew 7/64" Allen key screw counterclockwise. Once the screw is completely loose, remove and drop the handle down off the door handle shaft and replace with new handle.

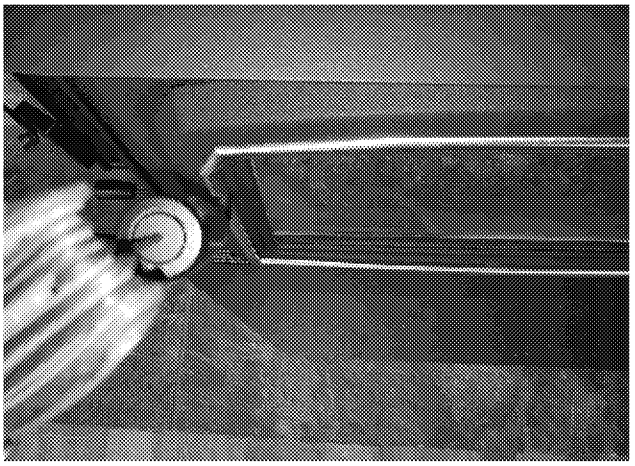

Vertical Stainless Deflector Replacement

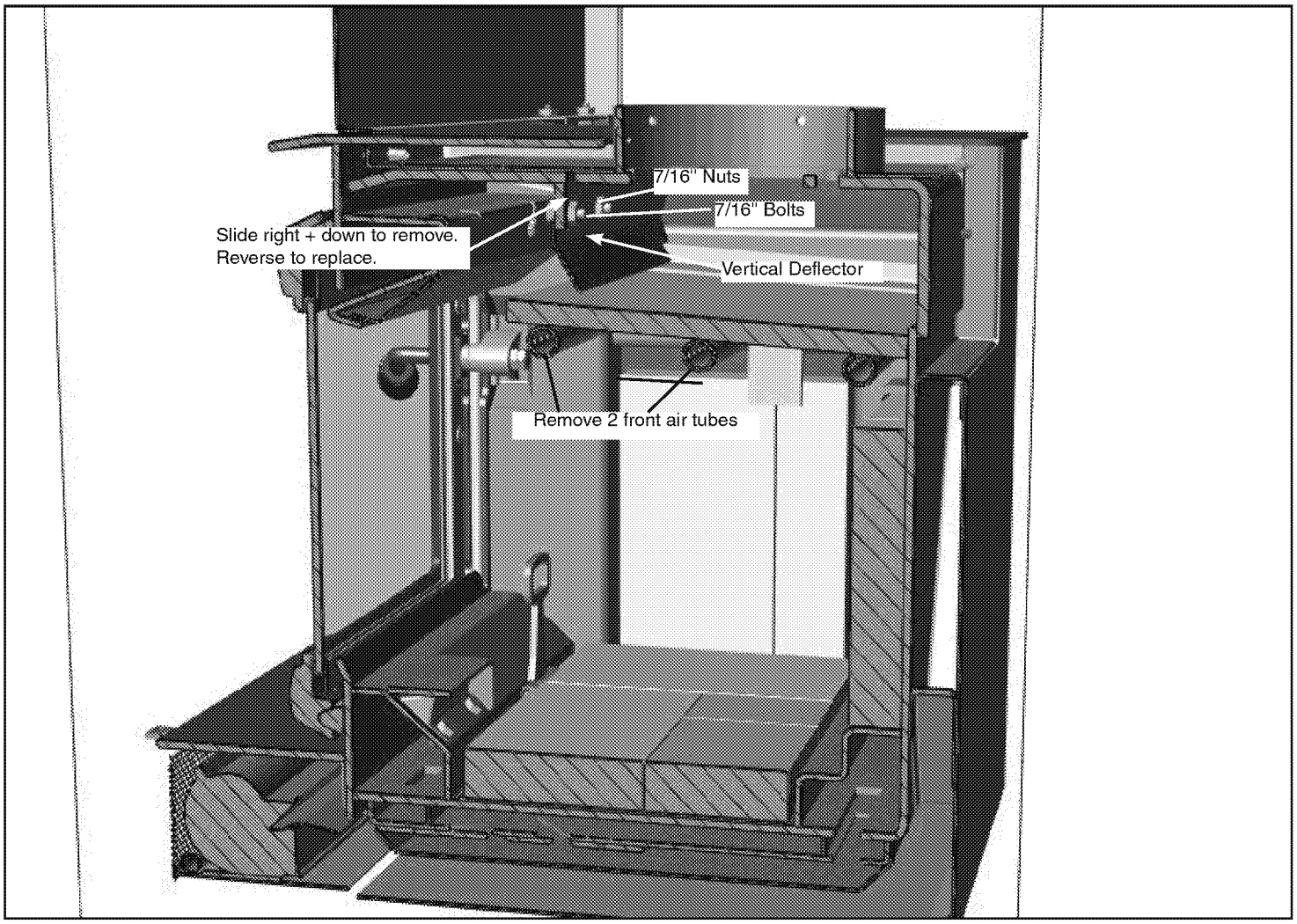

1. Remove 2 front secondary air tubes / vermiculite baffles as per page 21.
2. Loosen the two 7/16" bolts + nuts to remove / replace vertical baffle.
3. Repeat steps to install new vertical deflector.

NOTE: ENSURE BAFFLE IS PUSHED UP AS FAR AS POSSIBLE. TIGHT TO TOP OF FIREBOX.

Annual Maintenance	
Completely clean out entire unit	Annually
Inspect air tube and bricks	Replace any damaged parts.
Adjust door catch assembly	If unable to obtain a tight seal on the door - replace door gasket seal. Readjust door catch after new gasket installed.
Inspect condition and seal of: Glass Gasket Door Gasket	Perform paper test - replace gasket if required
Paper Test	Test the seal on the loading door with a paper bill. Place a paper bill in the gasket area of the door on a cold stove. Close the door. Try to remove the paper by pulling. The paper should not pull out easily, if it does, try adjusting the door latch, if that doesn't solve the problem replace the door gasket.
Check and lubricate door hinge + latch	Use only high temperature anti seize lube. (ie. never seize)
Check glass for cracks	Replace if required.
Clean blower motor	Disconnect power supply. Remove and clean blower. ***DO NOT LUBRICATE***
Inspect and clean chimney	Annual professional chimney cleaning recommended.

NOTE:

Chimney Cleaning

When cleaning the chimney system the air tubes, baffles should be removed for ease of cleaning. See manual for details on removal. We highly recommend that the chimney cleaning be done by a professional as they will have the necessary tools such as a proper sized brush and special vacuum cleaner designed to deal with fine particles.

main assembly

	Part #	Description
1	172-942	Flue Adapter Standard
1	172-946	Flue Adapter Offset
2	075-955	Baffle Set Complete
3	033-953	Air Tubes (Each)
4	172-917	Fan Kit Complete
5	910-330	Fan Speed Controller
6	910-586	Fan Control Knob
7	911-221/P	Replacement Fan Motor
8	910-142	Fan Thermodisc
9	021-973	Handle Assembly Complete
10	948-146	Wooden Door Handle
11	850-241	Complete Door - Black
11	850-243	Complete Door - Black with Nickel Accent
12	846-306	Replacement Glass - Includes Gasket (Size: 9-1/8" X 15-5/8")
13	936-241	Replacement Glass Gasket (Sold per foot - 4 Feet required)
14	846-570	Door Gasket Repair Kit
15	075-077F	Glass Retainer
16	948-920	Black Hinge Caps (Set of 2)
16	948-079BN	Nickel Hinge Cap (Each)
17	650-084	Door Spacer (Each)
18	075-064	Andiron Bracket (Each)
19	075-063F	Andiron (Each)
20	075-040	Side Baffle Cover (Each)
21	075-041	Baffle Holder (Each)
22	106-129	Control Tool
24	172-016	Control Tool Slide
25	075-062	Primary Air Cover Plate
26	075-037	SS Smoke Deflector
27	172-032	Heat Shield
N/S	911-096	120 Volt Power Cord
N/S	948-444	Regency Flame Logo Silver
N/S	075-021	Firebox Floor Gasket

main assembly

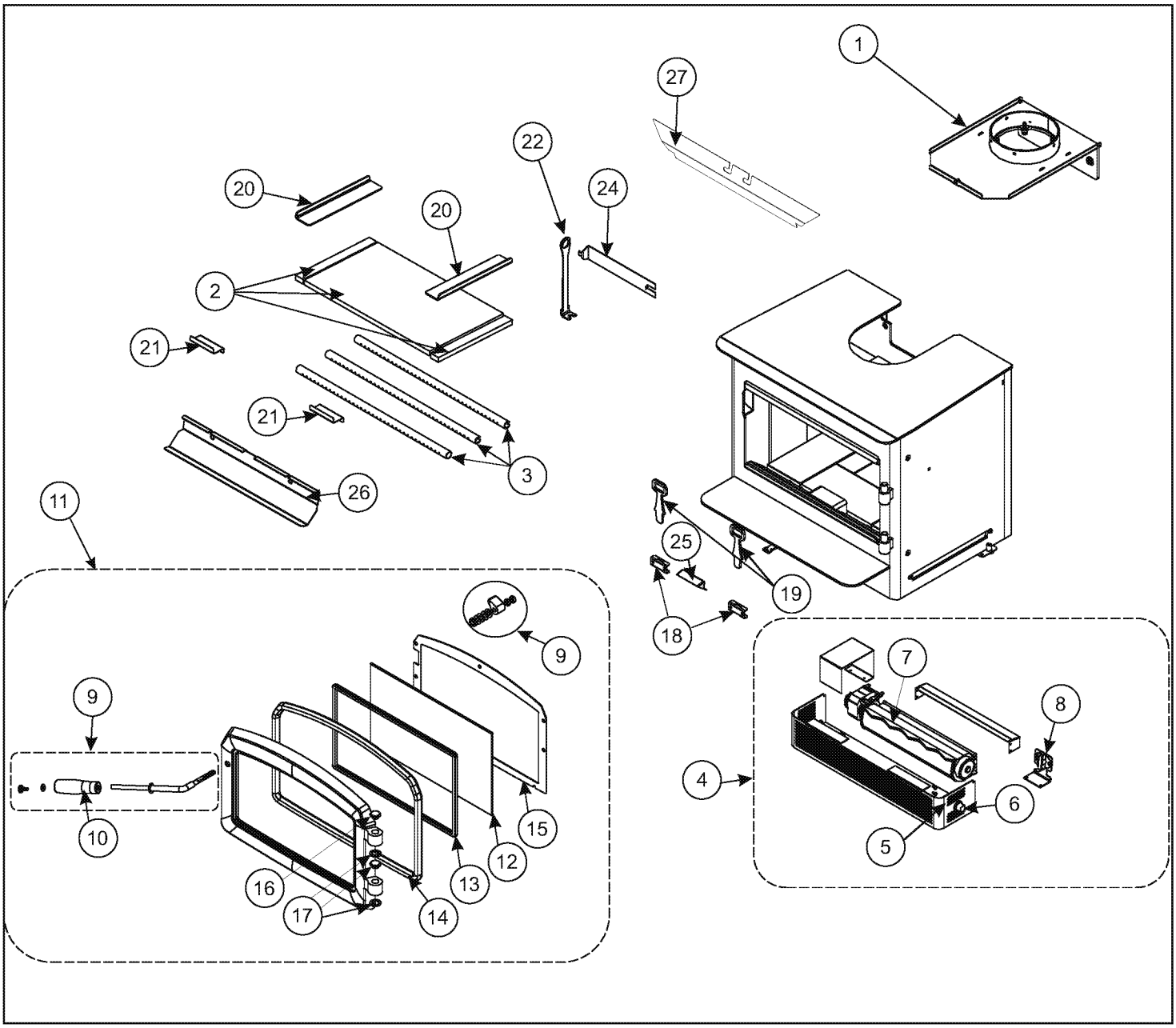

brick panels

172-960 I1150 Brick Kit Complete

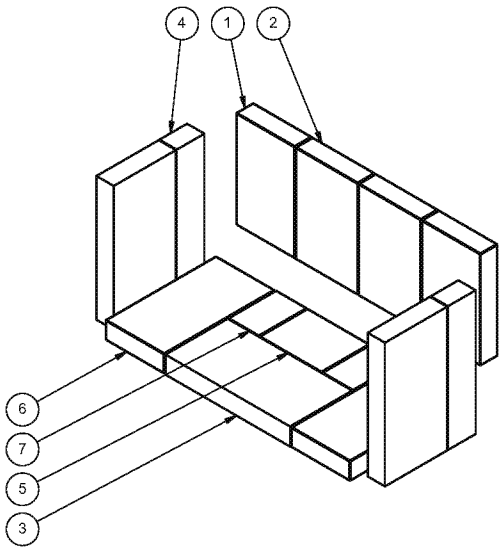

Fire bricks	
#	Size
1	4-1/4" x 7"
2	4-1/2" x 7"
3	9" x 4-1/2"
4	9" x 2"
5	3-1/2" x 4-1/2"
6	4-1/4" x 8"
7	3-1/2" x 2-1/4"

parts list

Faceplates

	Part #	Description
58)	172-920	Faceplate & Trim Set - Regular - Black
58)	172-922	Faceplate & Trim Set - Oversize - Black
59)	171-928	Bottom Piece and Fan Support - Regular
59)	171-930	Bottom Piece and Fan Support - Oversize
60)	*	Faceplate Right Side Regular / Oversize
61)	*	Faceplate Left Side Regular / Oversize
62)	*	Faceplate Top Regular / Oversize
64)	*	Bottom 1 Piece Faceplate
65)	*	Fan Support
N/S	171-570	Black Perimeter Trim Black Regular Faceplate
N/S	171-572	Black Perimeter Trim Black Oversize Faceplate
N/S	948-223	Regency Logo Plate
N/S	171-526	Faceplate Mounting Brackets (Each)
N/S	171-546	Faceplate Hardware Package

*Not available as a replacement part.

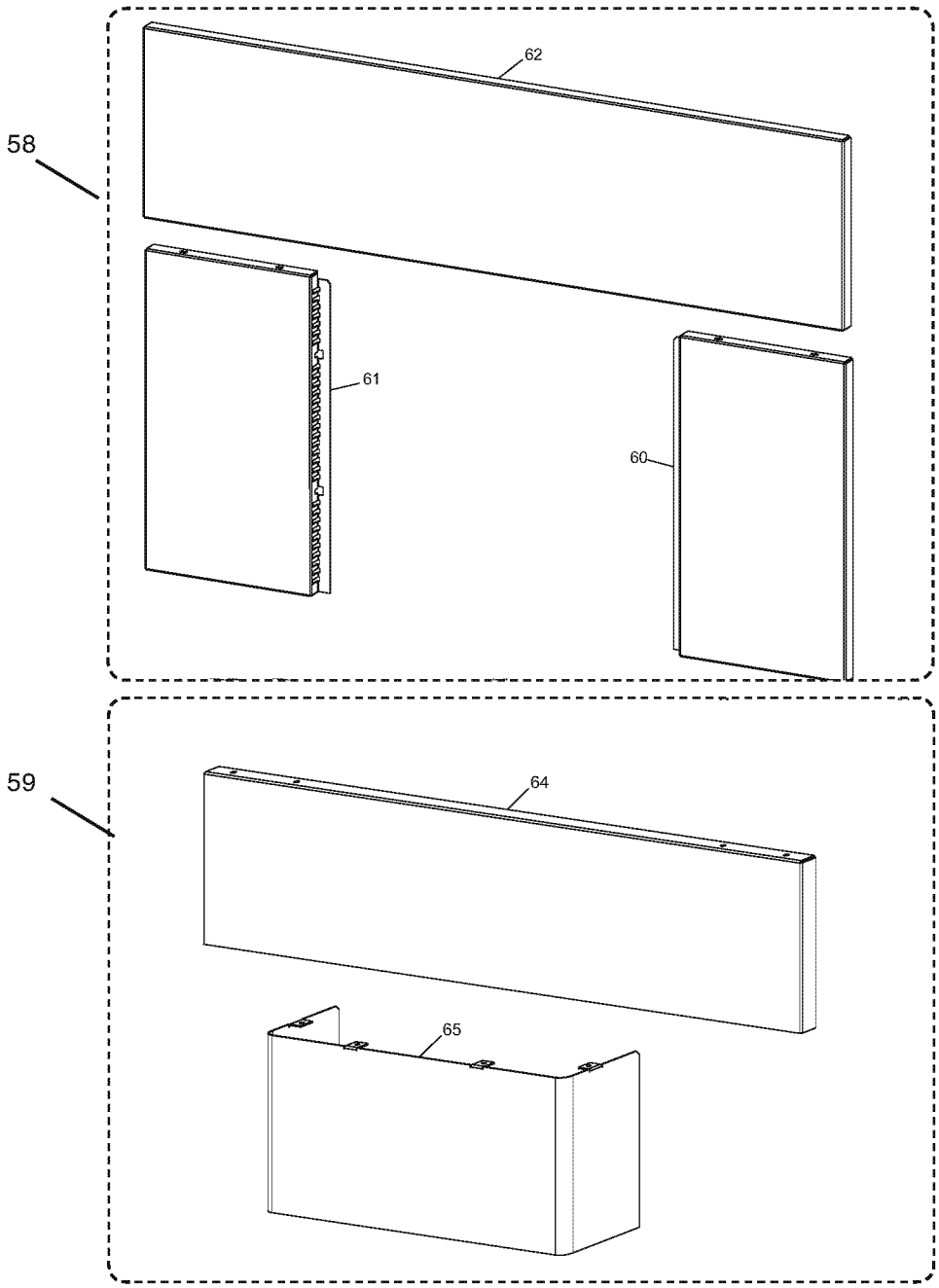

ED_005996_00000513-00263

ED_005996_00000513-00264

Limited Lifetime Warranty

FPI Fireplace Products International Ltd. (for Canadian customers) and Fireplace Products U.S., Inc. (for U.S. customers) (collectively referred to herein as "FPI") extends this Limited Lifetime Warranty to the original purchaser of this appliance provided the product remains in the original place of installation. The items covered by this limited warranty and the period of such coverage is set forth in the table below.

Some conditions apply (see below).

The policy is not transferable, amendable, or negotiable under any circumstances.

Wood Products	Component Coverage					Labor Coverage
Components Covered	Limited Lifetime	5 years	2 years	1 year	Warranty	(Years)
Welded Firebox Steel	✓					5
All Stainless Steel Components, Smoke Deflectors, Heat Shields etc.	✓					3
Air Tubes	✓					3
Airmate	✓					3
Door handle and latch assembly, all hardware	✓					3
Glass Thermal Breakage Only	✓					3
Steel Faceplates, Accessory Housings	✓					3
All Plating	✓					3
Ash Drawer, Heatshields, Pedestal	✓					
All Baffles, Steel, Ceramic, Vermiculite C-Baffles	✓					
All castings, firebox, surrounds, doors, panels etc.		✓				3
All Electrical, Blower, wiring, switches etc.			✓			2
Glass - Crazing				✓		1
Catalyst Combustor					*10 Years Prorated	
Venting/Chimney				✓		1
Screens				✓		1

*See specific warranty details in regards to the catalyst combustor in unit manual.

Conditions:

Warranty protects against defect in manufacture or FPI factory assembled components only, unless herein specified otherwise.

Any part(s) found to be defective during the warranty period as outlined above will be repaired or replaced at FPI's option through an accredited distributor, dealer or pre-approved and assigned agent provided that the defective part is returned to the distributor, dealer or agent for inspection if requested by FPI. Alternatively, FPI may at its own discretion fully discharge all of its obligations under the warranty by refunding the verified purchase price of the product to the original purchaser. The purchase price must be confirmed by the original Bill of Sale.

The authorized selling dealer, or an alternative authorized FPI dealer if pre-approved by FPI, is responsible for all in-field diagnosis and service work related to all warranty claims. FPI is not responsible for results or costs of workmanship of unauthorized FPI dealers or agents in the negligence of their service work.
At all times FPI reserves the right to inspect reported complaints on location in the field claimed to be defective prior to processing or authorizing of any claim. Failure to allow this upon request will void the warranty.

ED_005996_00000513-00265

All warranty claims must be submitted by the dealer servicing the claim, including a copy of the Bill of Sale (proof of purchase by you). All claims must be complete and provide full details as requested by FPI to receive consideration for evaluation. Incomplete claims may be rejected.

Replacement units are limited to one per warranty term. Airtube and baffle replacements are limited to one replacement per term.

Unit must be installed according to all manufacturers' instructions as per the manual.

All Local and National required codes must be met.

The installer is responsible to ensure the unit is operating as designed at the time of installation.

The original purchaser is responsible for annual maintenance of the unit, as outlined in the owner's manual. As outlined below, the warranty may be voided due to problems caused by lack of maintenance.

Repair/replacement parts purchased by the consumer from FPI after the original coverage has expired on the unit will carry a 90 day warranty, valid with a receipt only. Any item shown to be defective will be repaired or replaced at our discretion. No labor coverage is included with these parts.

Exclusions:
This Limited Lifetime Warranty does not extend to rust or corrosion of any kind due to: a lack of maintenance or improper venting, lack of combustion air provision, or exposure to corrosive chemicals (i.e. chlorine, salt, air, etc.).

This Limited Lifetime Warranty also does not extend to: paint, firebricks (rear, sides, or bottom), door gasketing, glass gasketing (or any other additional factory fitted gasketing), vermiculite floor bricks, andiron assemblies, and flue damper rods.

Malfunction, damage or performance based issues as a result of environmental conditions, location, chemical damages, downdrafts, installation error, installation by an unqualified installer, incorrect chimney components (including but not limited to cap size or type), operator error, abuse, misuse, use of improper fuels (such as unseasoned cordwood, mill-ends, construction lumber or debris, off-cuts, treated or painted lumber, metal or foil, plastics, garbage, solvents, cardboard, coal or coal products, oil based products, waxed cartons, compressed pre-manufactured logs, kiln dried wood), lack of regular maintenance and upkeep, acts of God, weather related problems from hurricanes, tornados, earthquakes, floods, lightning strikes/bolts or acts of terrorism or war, which result in malfunction of the appliance are not covered under the terms of this Limited Lifetime Warranty.

FPI has no obligation to enhance or modify any unit once manufactured (i.e. as products evolve, field modifications or upgrades will not be performed on existing appliances).

This warranty does not cover dealer travel costs for diagnostic or service work. All labor rates paid to authorized dealers are subsidized, pre-determined rates. Dealers may charge homeowner for travel and additional time beyond their subsidy.

Any unit showing signs of neglect or misuse will not be covered under the terms of this warranty policy and may void this warranty. This includes units with rusted or corroded fireboxes which have not been reported as rusted or corroded within three (3) months of installation/purchase.

Units which show evidence of being operated while damaged, or with problems known to the purchaser and causing further damages will void this warranty.

Units where the serial no. has been altered, deleted, removed or made illegible will void this warranty.

Minor movement, expansion and contraction of the steel is normal and is not covered under the terms of this warranty.

FPI is not liable for the removal or replacement of facings or finishing in order to repair or replace any appliance in the field.

Freight damages for products or parts are not covered under the terms of the warranty.

Products made or provided by other manufacturers and used in conjunction with the FPI appliance without prior authorization from FPI may void this warranty.

ED_005996_00000513-00266

Limitations of Liability:
The original purchaser's exclusive remedy under this warranty, and FPI's sole obligation under this warranty, express or implied, in contract or in tort, shall be limited to replacement, repair, or refund, as outlined above. IN NO EVENT WILL FPI BE LIABLE UNDER THIS WARRANTY FOR ANY INCIDENTAL OR CONSEQUENTIAL COMMERCIAL DAMAGES OR DAMAGES TO PROPERTY. TO THE EXTENT PERMITTED BY APPLICABLE LAW, FPI MAKES NO EXPRESS WARRANTIES OTHER THAN THE WARRANTY SPECIFIED HEREIN. THE DURATION OF ANY IMPLIED WARRANTY IS LIMITED TO DURATION OF THE EXPRESSED WARRANTY SPECIFIED ABOVE. IF IMPLIED WARRANTIES CANNOT BE DISCLAIMED, THEN SUCH WARRANTIES ARE LIMITED IN DURATION TO THE DURATION OF THIS WARRANTY.

Some U.S. states do not allow limitations on how long an implied warranty lasts, or allow exclusion or limitation of incidental or consequential damages, so the above limitations or exclusions may not apply to you.

Customers located outside the U.S. should consult their local, provincial or national legal codes for additional terms which may be applicable to this warranty.

How to Obtain Warranty Service:
Customers should contact the authorized selling dealer to obtain all warranty and service. In the event the authorized selling dealer is unable to provide warranty / service, please contact FPI by mail at the address listed below. Please include a brief description of the problem and your address, email and telephone contact information. A representative will contact you to make arrangements for an inspection and/or warranty service, by an alternative dealer.

Product Registration and Customer Support:
Thank you for choosing a Regency Fireplace. Regency strives to be a world leader in the design, manufacture, and marketing of hearth products. To provide the best support for your product, we request that you complete a product registration form at http://www.regency-fire.com/Customer-Care/Warranty-Registration.aspx within ninety (90) days of purchase.

ED_005996_00000513-00267

Product Registration and Customer Support:

Thank you for choosing a Regency Fireplace. Regency strives to be a world leader in the design, manufacture, and marketing of hearth products. To provide the best support for your product, we request that you complete a product registration form found on our Web Site under Customer Care within ninety (90) days of purchase.

For purchases made in **CANADA or the UNITED STATES**:
http://www.regency-fire.com/Customer-Care/Warranty-Registration.aspx

For purchases made in AUSTRALIA:
http://www.regency-fire.com.au/Customer-Care/Warranty-Registration.aspx

You may also complete the warranty registration form below to register your Regency Fireplace Product and mail and/or fax it back to us, and we will register the warranty for you. It is important you provide us with all the information below in order for us to serve you better.

Warranty Registration Form (or Register online immediately at the above Web Site):

Warranty Details	
Serial Number (required):	
Purchase Date (required) (mm/dd/yyyy):	
Product Details	
Product Model (required):	
Dealer Details	
Dealer Name (required):	
Dealer Address:	
Dealer Phone #:	
Installer:	
Date Installed (mm/dd/yyyy):	
Your Contact Details (required)	
Name:	
Address:	
Phone:	
Email:	

For purchases made in CANADA:

FPI Fireplace Products International Ltd.
6988 Venture St.
Delta, British Columbia
Canada, V4G 1H4

Phone: 604-946-5155
Fax: 1-866-393-2806

For purchases made in the UNITED STATES:

Fireplace Products U.S., Inc.
PO Box 2189 PMB 125
Blaine, WA
United States, 98231

Phone: 604-946-5155
Fax: 1-866-393-2806

For purchases made in AUSTRALIA:

Fireplace Products Australia Pty Ltd
1- 3 Conquest Way
Hallam, VIC
Australia, 3803

Phone: +61 3 9799 7277
Fax: +61 3 9799 7822

For fireplace care and tips and answers to most common questions please visit our Customer Care section on our Web Site. Please feel free to contact your selling dealer if you have any questions about your Regency product.

ED_005996_00000513-00268

ED_005996_00000513-00269

ED_005996_00000513-00270

notes

ED_005996_00000513-00271

ED_005996_00000513-00272

Installer: Please complete the following information

Dealer Name & Address: .....

.....

Installer: .....

Phone #: .....

Date Installed: .....

Serial No.: .....

Regency is a trademark of FPI Fireplace Products International Ltd.
© Copyright 2019, FPI Fireplace Products International Ltd. All rights reserved.

Printed in Canada

(Duplicate Serial #) **531**

LISTED FACTORY BUILT FIREPLACE INSERT DO NOT REMOVE THIS LABEL / NE PAS ENLEVER CETTE ÉTIQUETTE
CERTIFIED FOR USE IN CANADA AND U.S.A.
MODEL: I1150
TESTED TO:
0219WN027S ULC S628-M93 / UL 1482-2011 (R2015)

REGENCY **531**

U.S. ENVIRONMENTAL PROTECTION AGENCY CERTIFIED TO COMPLY WITH 2020 PARTICULATE EMISSION STANDARDS USING CORD WOOD." TESTED TO ASTM E3053. MODEL REGENCY I1150 – 1.7G /HR. THIS WOOD HEATER NEEDS PERIODIC INSPECTION AND REPAIR FOR PROPER OPERATION. CONSULT THE OWNER'S MANUAL FOR FURTHER INFORMATION. IT IS AGAINST FEDERAL REGULATIONS TO OPERATE THIS WOOD HEATER IN A MANNER INCONSISTENT WITH THE OPERATING INSTRUCTIONS IN THE OWNER'S MANUAL.

INSTALL AND USE ONLY IN ACCORDANCE WITH THE MANUFACTURER'S INSTALLATION AND OPERATING INSTRUCTIONS. INSTALL AND USE ONLY IN MASONRY FIREPLACE OR FACTORY BUILT FIREPLACE.
CONTACT LOCAL BUILDING OR FIRE OFFICIALS ABOUT RESTRICTIONS AND INSTALLATION INSPECTION IN YOUR AREA.

MINIMUM CLEARANCES TO COMBUSTIBLE MATERIALS
(MEASURED FROM INSERT BODY)

ADJACENT SIDEWALL	A) 15in / 380mm
MANTEL	B) 20n / 510mm
TOP FACING	C) 14in / 355mm
SIDE FACING (to side surround)	D) 0.5in / 13mm

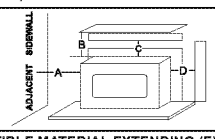

COMBUSTIBLE FLOOR MUST BE PROTECTED BY NON-COMBUSTIBLE MATERIAL EXTENDING (E) 16 IN / 405MM TO FRONT AND (G) 8IN / 205MM TO SIDES FROM FUEL DOOR. IN CANADA MUST EXTEND 18" TO FRONT.
THERMAL INSULATION WITH A R VALUE = 1.4 AT A DISTANCE OF 18" FROM FRONT OF DOOR OPENING FOR CANADA AND 16" FOR USA. IF UNIT RAISED 4.5" FROM FLOOR, NO THERMAL INSULATION IS REQUIRED.

COMPONENTS REQUIRED FOR INSTALLATION: 5.5" (140mm) or 6" (152mm)STAINLESS STEEL LINER LISTED CHIMNEY LINER.
OPTIONAL COMPONENT: FAN PART#172-917, ELECTRICAL RATING: VOLTS 115, 60 HZ, 0.6 AMPS
DANGER: RISK OF ELECTRIC SHOCK. DISCONNECT POWER BEFORE SERVICING UNIT.
DO NOT REMOVE BRICKS OR MORTAR IN MASONRY FIREPLACE. FOR USE WITH SOLID WOOD FUEL ONLY. DO NOT USE GRATE OR ELEVATE FIRE. DO NOT CONNECT THIS UNIT TO A CHIMNEY FLUE SERVING ANOTHER APPLIANCE. BUILD WOOD FIRE DIRECTLY ON HEARTH. OPERATE WITH FEED DOOR CLOSED, OPEN TO FEED FIRE ONLY. REPLACE GLASS ONLY WITH CERAMIC GLASS (5MM). INSPECT AND CLEAN CHIMNEY FREQUENTLY. UNDER CERTAIN CONDITIONS OF USE CREOSOTE BUILDUP MAY OCCUR RAPIDLY. DO NOT OVERFIRE, IF INSERT GLOWS YOU ARE OVER-FIRING.
CAUTION: MOVING PARTS MAY CAUSE INJURY. DO NOT OPERATE UNIT WITH A REMOVED PART OR PARTS.

CERTIFIÉ CONFORME AUX NORMES 2020 DE L'AGENCE AMÉRICAINE DE L'ENVIRONNEMENT EN MATIÈRE D'ÉMISSION DE PARTICULES DE BOIS LORSQUE DES PLANCHES DE BOIS ASSEMBLÉES (BOIS CORDÉ) SONT UTILISÉES. HOMOLOGUÉ AVEC LA ASTM E3053. MODÈLE REGENCY I1150 –1.7 G /H. CET APPAREIL DE CHAUFFAGE AU BOIS DOIT ÊTRE INSPECTÉ PÉRIODIQUEMENT ET RÉPARÉ POUR FONCTIONNER CORRECTEMENT. CONSULTER LE MANUEL D'INSTALLATION POUR PLUS D'INFORMATION. LA RÉGLEMENTATION FÉDÉRALE INTERDIT DE FAIRE FONCTIONNER UN TEL APPAREIL SI LES CONSIGNES D'UTILISATION CONTENUES DANS LE PRÉSENT MANUEL NE SONT PAS RESPECTÉES.

D'INSTALLATION ET D'UTILISATION DU FABRICANT. À INSTALLER ET À UTILISER UNIQUEMENT DANS UN FOYER EN MAÇONNERIE OU UN FOYER PRÉFABRIQUÉ.
CONTACTEZ LES AUTORITÉS LOCALES EN BÂTIMENT OU INCENDIE POUR CONNAÎTRE LES RESTRICTIONS D'INSTALLATION ET LES RÈGLES D'INSPECTION DANS VOTRE RÉGION.

DÉGAGEMENTS MINIMAUX AUX MATÉRIAUX COMBUSTIBLES
(MESURES PRISES DEPUIS LE CAISSON DE L'ENCASTRABLE)

MUR LATÉRAL ADJACENT	A) 15 po / 380 mm
MANTEAU	B) 20 po / 510 mm
PAREMENT SUPÉRIEUR	C) 14 po / 355 mm
PAREMENT LATÉRAL	D) 0,5 po / 13 mm

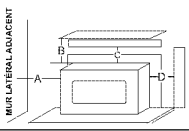

LE PLANCHER COMBUSTIBLE DOIT ÊTRE PROTÉGÉ PAR UN MATÉRIAU NON COMBUSTIBLE S'ÉTENDANT SUR (E) 16 PO / 405MM À L'AVANT ET SUR (G) 8 PO / 205MM ENTRE LES CÔTÉS ET LA PORTE DE CHARGEMENT DU COMBUSTIBLE. PROLONGEMENT SUR 18 PO À L'AVANT AU CANADA. ISOLATION THERMIQUE AVEC UNE VALEUR R = 1,4 À UNE DISTANCE DE 18 PO DEPUIS L'AVANT DE L'OUVERTURE DE LA PORTE AU CANADA ET 16 PO AUX ÉTATS-UNIS. SI L'APPAREIL EST SURÉLEVÉ À 4,5 PO DU SOL, AUCUNE ISOLATION THERMIQUE N'EST REQUISE.

PIÈCES OBLIGATOIRES POUR L'INSTALLATION : GAINE DE CHEMINÉE HOMOLOGUÉE EN ACIER INOXYDABLE DE 5,5 PO (140mm) ou 6 PO (152mm).
PIÈCE EN OPTION : VENTILATEUR PIÈCE N°172-917
CARACTÉRISTIQUES ÉLECTRIQUES : 115 VOLTS, 60 HZ, 0,6 AMPS.
DANGER : RISQUE D'ÉLECTROCUTION. DÉBRANCHER LE COURANT AVANT DE PROCÉDER À L'ENTRETIEN DE L'APPAREIL.
NE PAS RETIRER LES BRIQUES OU LE MORTIER DU FOYER EN MAÇONNERIE. À UTILISER AVEC UN COMBUSTIBLE SOLIDE EN BOIS SEULEMENT. NE PAS UTILISER DE GRILLE NI SURÉLEVER LE FEU. NE PAS CONNECTER CET APPAREIL À UN CONDUIT DE CHEMINÉE DESSERVANT UN AUTRE APPAREIL. FAIRE UN FEU DE BOIS DIRECTEMENT SUR L'ÂTRE. FAIRE FONCTIONNER L'APPAREIL AVEC LA PORTE DE CHARGEMENT FERMÉE, L'OUVRIR SEULEMENT POUR ALIMENTER LE FEU. REMPLACER LA VITRE SEULEMENT AVEC UNE VITRE EN CÉRAMIQUE (5MM). FAIRE INSPECTER ET RAMONER LA CHEMINÉE À INTERVALLES RÉGULIERS. ACCUMULATION RAPIDE DE CRÉOSOTE DANS CERTAINES CONDITIONS. NE PAS SURCHAUFFER : SI L'ENCASTRABLE EST ROUGEOYANT, L'APPAREIL SURCHAUFFE.
ATTENTION : LES PIÈCES AMOVIBLES PEUVENT ENTRAÎNER DES BLESSURES. NE PAS FAIRE FONCTIONNER L'APPAREIL SI UNE OU PLUSIEURS PIÈCES ONT ÉTÉ ENLEVÉES.

ATTENTION / DANGER

HOT WHILE IN OPERATION
DO NOT TOUCH. KEEP CHILDREN, CLOTHING AND FURNITURE AWAY.
CONTACT MAY CAUSE SKIN BURNS.
READ ABOVE INSTRUCTIONS.

APPAREIL CHAUD LORSQU'IL FONCTIONNE.
NE PAS TOUCHER. GARDER À DISTANCE DES ENFANTS, DES VÊTEMENTS ET DU MOBILIER.
TOUT CONTACT PEUT CAUSER DES BRÛLURES.
LIRE LES INSTRUCTIONS CI-DESSUS.

FABRIQUÉ PAR :
FPI FIREPLACE PRODUCTS
INTERNATIONAL LTÉE.
6988 VENTURE ST.
DELTA, BC V4G 1H4

920-131

DATE OF MANUFACTURE / DATE DE FABRICATION
MADE IN CANADA / FAIT AU CANADA

2019	2020	2021	2022	2023	JAN	FEB	MAR	APR	MAY	JUN	JUL	AUG	SEPT	OCT	NOV	DEC
○	○	○	○	○	☐	☐	☐	☐	☐	☐	☐	☐	☐	☐	☐	☐

Part #: 920-131
Colour: Black on grey, except for selected items which are printed red.
Size: File is at 100%. 4" W x 10.7" H (excluding tear off

June 24/19: Created decal
July 2/19: Updated 'D' clearance

Established 1974

QUALITY CONTROL SERVICES

LABORATORY EQUIPMENT • SALES • SERVICE • CALIBRATION • REPAIRS
2340 SE 11TH Ave. Portland, Oregon 97214 • Box 14831 Portland, Oregon 97293
(503) 236-2712 • FAX (503) 235-2535 • www.qc-services.com

ACCREDITED
CERTIFICATE #1550.01

PFS Teco
11785 SE Hwy 212 STE#305
Clackamas, OR 97015

Report Number: DIRI01A05026181218

A2LA ACCREDITED
CERTIFICATE OF CALIBRATION WITH DATA

INSTRUMENT INFORMATION

Item	Make	Model	Serial Number	Customer ID	Location
Scale	Rice Lake	IQ+355E-2A x 100(	A05026	#041	Lab
Units	**Readability**	**SOP**	**Cal Date**	**Last Cal Date**	**Cal Due Date**
lbs	0.1	QC033	12/18/18	6/13/18	12/2019

FUNCTIONAL CHECKS

SHIFT TEST	LINEARITY	REPEATABILITY	ENVIRONMENTAL CONDITIONS
Test Wt: 250 Tol: 1	Test Wt: HB44 Tol: HB44	Test Wt: 100 Tol: 1	☐ Good ☑ Fair ☐ Poor
As-Found: Pass:☑ Fail:☐	As-Found: Pass:☑ Fail:☐	As-Found: Pass:☑ Fail:☐	Temperature: 16.9°C
As-Left: Pass:☑ Fail:☐	As-Left: Pass:☑ Fail:☐	As-Left: Pass:☑ Fail:☐	

CALIBRATION DATA

Standard	As-Found	As-Left	Expanded Uncertainty
1000	999.3	1000.2	0.12
700	699.7	700.1	0.12
500	499.7	500.1	0.08
300	299.8	300.1	0.08
100	99.9	100.0	0.05
50	50.0	50.0	0.05

CALIBRATION STANDARDS

Item	Make	Model	Serial Number	Cal Date	Cal Due Date	NIST ID
Avoirdupois Cast W	Rice Lake	25 and 50lb	PWO990-CA	11/24/17	11/2019	20172265

Permanent Information Concerning this Equipment:
12 month calibration cycle. 2000lb platform.

Comments/Information Concerning this Calibration
12/18 - RH = 67%. Adjusted span.

Report prepared/reviewed by: ServiceTechDC **Date:** 12/28/18 **Technician:** R.Kauble
Signature:

THIS CERTIFICATE SHALL NOT BE REPRODUCED, EXCEPT IN FULL, WITHOUT THE APPROVAL OF QUALITY CONTROL SERVICES, INC.

The uncertainty is calculated according to the ISO Guide to the Expression of Uncertainty in Measurement and includes the uncertainty of standards used combined with the observed standard deviation of the unit under test. The uncertainty is expanded with a k factor of 2 for an approximate 95% level of confidence. Instruments listed above were calibrated using standards traceable to the National Institute of Standards and Technology (NIST). Calibration data reflect results at the time and location of calibration. Calibration data should be reviewed to insure that the instrument is performing to its required accuracy.

Member: National Conference of Standards Laboratories and Weights & Measures

PT ID: DIRI01

Established 1974

QUALITY CONTROL SERVICES

LABORATORY EQUIPMENT • SALES • SERVICE • CALIBRATION • REPAIRS
2340 SE 11TH Ave. Portland, Oregon 97214 • Box 14831 Portland, Oregon 97293
(503) 236-2712 • FAX (503) 235-2535 • www.qc-services.com

ACCREDITED
CERTIFICATE #1550.01

PFS Teco
11785 SE Hwy 212 STE#305
Clackamas, OR 97015

Report Number: DIRI0182484A0912013i181218

A2LA ACCREDITED
CERTIFICATE OF CALIBRATION WITH DATA

INSTRUMENT INFORMATION

Item	Make	Model	Serial Number	Customer ID	Location
Scale	Digiweigh	DWP12i 400x.01	82484A0912013i	#050	Lab
Units	**Readability**	**SOP**	**Cal Date**	**Last Cal Date**	**Cal Due Date**
lbs	0.01	QC033	12/18/18	6/13/18	12/2019

FUNCTIONAL CHECKS

SHIFT TEST	LINEARITY	REPEATABILITY	ENVIRONMENTAL CONDITIONS
Test Wt: 50 / Tol: 0.05	Test Wt: HB44 / Tol: HB44	Test Wt: 50 / Tol: 0.01	☐ Good ☑ Fair ☐ Poor
As-Found: Pass:☑ Fail:☐	As-Found: Pass:☑ Fail:☐	As-Found: Pass:☑ Fail:☐	
As-Left: Pass:☑ Fail:☐	As-Left: Pass:☑ Fail:☐	As-Left: Pass:☑ Fail:☐	Temperature: 16.4°C

CALIBRATION DATA

Standard	As-Found	As-Left	Expanded Uncertainty
400	399.99	399.99	0.058
300	300.00	300.00	0.058
200	200.03	200.03	0.058
100	100.01	100.01	0.012
50	50.00	50.00	0.012
20	20.00	20.00	0.012

CALIBRATION STANDARDS

Item	Make	Model	Serial Number	Cal Date	Cal Due Date	NIST ID
Avoirdupois Cast W	Rice Lake	25 and 50lb	PWO990-CA	11/24/17	11/2019	20172265

Permanent Information Concerning this Equipment:
12 month calibration cycle.

Comments/Information Concerning this Calibration
12/18 - RH = 64%. Adjusted span.

Report prepared/reviewed by: ServiceTechJC **Date:** 12/28/18 **Technician:** R.Kauble
Signature:

THIS CERTIFICATE SHALL NOT BE REPRODUCED, EXCEPT IN FULL, WITHOUT THE APPROVAL OF QUALITY CONTROL SERVICES, INC.

The uncertainty is calculated according to the ISO Guide to the Expression of Uncertainty in Measurement and includes the uncertainty of standards used combined with the observed standard deviation of the unit under test. The uncertainty is expanded with a k factor of 2 for an approximate 95% level of confidence. Instruments listed above were calibrated using standards traceable to the National Institute of Standards and Technology (NIST). Calibration data reflect results at the time and location of calibration. Calibration data should be reviewed to insure that the instrument is performing to its required accuracy.

Member: National Conference of Standards Laboratories and Weights & Measures

PT ID: DIRI01

Dry Gas Meter Calibration

Meter Manufacturer:	Apex
Model:	XC-60-ED
Lab ID #:	53
Serial #:	1902130
Calibration Date:	6/14/2019
Calibration Expiration:	12/14/2019
Barometric Pressure:	29.97 in. Hg

Reference Standard DGM	
Manufacturer:	Apex
Model:	SK25DA
Lab ID#:	47
Serial #:	1101001
Calibration Expiration Date:	3/13/2020
Calibration γ Factor:	0.998

Unit Under Test Previous Calibration	
Date	12/17/2018
γ Factor:	1.004
Allowable Deviation (±5%):	0.0502
Actual Deviation:	0.01
Result:	PASS

Calibration Data	Run 1	Run 2	Run 3
Standard DGM Initial Volume (L)	0.000	0.000	0.000
Standard DGM Final Volume (L)	147.373	142.005	143.359
Standard DGM Temperature (°F)	71.0	72.0	72.0
Standard DGM Pressure (in H_2O)	0.00	0.00	0.0
DGM Initial Volume (ft^3)	0.000	0.000	0.000
DGM Final Volume (ft^3)	5.227	5.114	5.224
DGM Temperature (°F)	78.0	85.0	91.0
DGM Pressure (in H_2O)	2.67	2.00	1.5
Time (min)	33.0	36.0	42.0
Net Volume for Standard DGM (ft^3)	5.204	5.015	5.063
Net Volume for DGM (ft^3)	5.227	5.114	5.224

Dry Gas Meter γ Factor	1.000	0.998	0.998
γ Factor Deviation From Average	1.000	0.998	0.998

Average Gas Meter γ Factor: 0.999

Calculations:

1. Deviation = |Average value for all runs - current run value|
2. $\gamma = [V_{std} \times (\gamma_{Std}) \times (P_{bar}+P_{std}/13.6) \times (T_{DGM} + 460)] / [V_{DGM} \times (T_{std} + 460) \times (P_{bar} + P_{DGM}/ 13.6)]$

Standard Reference Meter is calibrated to NIST traceable standards. Uncertainty of measurement is ±0.5%.

Dry Gas Meter Calibration

Meter Manufacturer:	Apex
Model:	XC-60-ED
Lab ID #:	54
Serial #:	1902133
Calibration Date:	6/14/2019
Calibration Expiration:	12/14/2019
Barometric Pressure:	29.97 in. Hg

Reference Standard DGM	
Manufacturer:	Apex
Model:	SK25DA
Lab ID#:	47
Serial #:	1101001
Calibration Expiration Date:	3/13/2020
Calibration γ Factor:	0.998

Unit Under Test Previous Calibration	
Date	12/17/2018
γ Factor:	1.000
Allowable Deviation (±5%):	0.05
Actual Deviation:	0.00
Result:	PASS

Calibration Data	Run 1	Run 2	Run 3
Standard DGM Initial Volume (L)	0.000	0.000	0.000
Standard DGM Final Volume (L)	139.967	143.359	139.656
Standard DGM Temperature (°F)	72.0	73.0	75.0
Standard DGM Pressure (in H_2O)	0.00	0.00	0.0
DGM Initial Volume (ft^3)	0.000	0.000	0.000
DGM Final Volume (ft^3)	5.098	5.242	5.114
DGM Temperature (°F)	92.0	93.0	95.0
DGM Pressure (in H_2O)	2.99	2.02	1.3
Time (min)	30.0	37.0	45.0
Net Volume for Standard DGM (ft^3)	4.943	5.063	4.932
Net Volume for DGM (ft^3)	5.098	5.242	5.114

Dry Gas Meter γ Factor	0.997	0.995	0.995
γ Factor Deviation From Average	0.997	0.995	0.995

Average Gas Meter γ Factor: 0.996

Calculations:

1. Deviation = |Average value for all runs - current run value|
2. $\gamma = [V_{std} \times (\gamma_{Std}) \times (P_{bar}+P_{std}/13.6) \times (T_{DGM} + 460)] / [V_{DGM} \times (T_{std} + 460) \times (P_{bar} + P_{DGM}/ 13.6)]$

Standard Reference Meter is calibrated to NIST traceable standards. Uncertainty of measurement is ±0.5%.

 Technician:

Dry Gas Meter Calibration

Meter Manufacturer:	Apex
Model:	Apex-AK-600
Lab ID #:	55
Serial #:	810016
Calibration Date:	6/14/2019
Calibration Expiration:	6/14/2020
Barometric Pressure:	29.95 in. Hg

Reference Standard DGM	
Manufacturer:	Apex
Model:	SK25DA
Lab ID#:	47
Serial #:	1101001
Calibration Expiration Date:	3/13/2020
Calibration γ Factor:	0.998

Unit Under Test Previous Calibration	
Date	6/15/2018
γ Factor:	0.999
Allowable Deviation (±5%):	0.04995
Actual Deviation:	0.01
Result:	PASS

Calibration Data	Run 1	Run 2	Run 3
Standard DGM Initial Volume (L)	0.000	0.000	0.000
Standard DGM Final Volume (L)	146.758	221.981	165.496
Standard DGM Temperature (°F)	75.0	76.0	77.0
Standard DGM Pressure (in H_2O)	0.00	0.00	0.0
DGM Initial Volume (ft^3)	0.000	0.000	0.000
DGM Final Volume (ft^3)	5.283	8.006	5.965
DGM Temperature (°F)	82.0	84.0	85.0
DGM Pressure (in H_2O)	0.00	0.00	0.0
Time (min)	27.0	41.0	30.0
Net Volume for Standard DGM (ft^3)	5.183	7.839	5.844
Net Volume for DGM (ft^3)	5.283	8.006	5.965

Dry Gas Meter γ Factor	0.992	0.992	0.992
γ Factor Deviation From Average	0.992	0.992	0.992

Average Gas Meter γ Factor: 0.992

Calculations:

1. Deviation = |Average value for all runs - current run value|
2. $\gamma = [V_{std} \times (\gamma_{Std}) \times (P_{bar}+P_{std}/13.6) \times (T_{DGM} + 460)] / [V_{DGM} \times (T_{std} + 460) \times (P_{bar} + P_{DGM}/ 13.6)]$

Standard Reference Meter is calibrated to NIST traceable standards. Uncertainty of measurement is ±0.5%.

Established 1974

QUALITY CONTROL SERVICES

LABORATORY EQUIPMENT • SALES • SERVICE • CALIBRATION • REPAIRS
2340 SE 11TH Ave. Portland, Oregon 97214 • Box 14831 Portland, Oregon 97293
(503) 236-2712 • FAX (503) 235-2535 • www.qc-services.com

ACCREDITED
Calibration Services
Certificate Number 1550.01
Laboratory code 115953

Report of Calibration

Firm: Dirigo Laboratories
Address: 11785 SE Hwy 212, Ste 305
City/State/Zip: Clackamas, OR 97015

Test Completed: 03/21/17
Submitted By: John Steiner
Traceable Number: 20170468

Test Item: 200mg and 100mg Individual Weights
Serial No.: Listed in Table

Manufacturer: Troemner

Material	Assumed Density	Range	Tolerance Class
Stainless Steel	7.95 g/cm^3	200mg & 100mg	ASTM Class 1

Method and Traceability
The procedure used for this calibration is NIST IR 6969 SOP 4 Double Substitution Weighing Design. Standards used for comparison are traceable to the National Institute of Standards and Technology (reports on file) and are part of a comprehensive measurement assurance program for ensuring continued accuracy and traceability within the level of uncertainty reported. The Traceable Number listed above is Traceable to National Standards through an unbroken chain of comparison each having stated uncertainties.

Standards Used:
100g to 1mg Working Standards Were Calibrated: 03/03/17 Due: 03/31/18 Standards ID: 723318
Mass Comparators Used: MET-05 **Tested by:** D. Thompson

Conventional Mass: "The conventional value of the result of weighing a body in air is equal to the mass of a standard, of conventionally chosen density, at a conventionally chosen temperature, which balances this body at this reference temperature in air of conventionally chosen density. International Recommendation 33 (OIML IR 33 1973, 1979). "Conventional Value of the Result of Weighing in Air" **(Previously known as "Apparent Mass vs. 8.0g/cm^3).**

Uncertainty Statement: The uncertainty conforms to the ISO Guide to the Expressions of Uncertainty in Measurement. Uncertainty as reported is based on a coverage factor k=2 for an approximate 95 percent level of uncertainty. Uncertainty components include the standard deviation of the process, the uncertainty of the standard used, an uncertainty component associated with the potential drift of the standard used, and the estimated uncertainty related to measuring and determining the air buoyancy effect.

Conventional Mass Values are listed on page 2 of this report.

Quality Control Services, Inc.
Metrology Laboratory Manager
E-mail dthompson@qc-services.com

Date: 03/21/17

Signature David S. Thompson

This document shall not be reproduced, except in full, without the written approval of Quality Control Services Mass Laboratory.

Member: National Conference of Standards Laboratories and Weights & Measures

QUALITY CONTROL SERVICES
LABORATORY EQUIPMENT • SALES • SERVICE • CALIBRATION • REPAIRS
2340 SE 11TH Ave. Portland, Oregon 97214 • Box 14831 Portland, Oregon 97293
(503) 236-2712 • FAX (503) 235-2535 • www.qc-services.com
Established 1974

ACCREDITED
Calibration Services
Certificate Number: 1550.01
Laboratory code: 115953

Report of Calibration

Firm: Dirigo Laboratories
Address: 11785 SE Hwy 212, Ste 305
City/State/Zip: Clackamas, OR 97015

Test Completed: 03/21/17
Submitted By: John Steiner
Traceable Number: 20170468

Test Item: 200mg and 100mg Individual Weights
Serial No.: Listed in Table

Manufacturer: Troemner

Laboratory Environment at time of test

Temperature °C	Pressure mmHg	Humidity %RH
21.967	753.44	49.44

Conventional Mass Value

Nominal Value	As Found grams	As Found Correction* (mg)	Uncertainty (mg)	Tolerance (mg)
200mg SN 1000101395	0.2000061	0.0061	0.0026	0.01
100mg SN 1000126267	0.1000046	0.0046	0.0028	0.01

*Correction is the difference between the conventional mass value of a weight and its nominal value.

Comments: These weights were new from the manufacturer and were within ASTM Class 1 tolerances As Found. No adjustments or changes were made so As Found values should be considered to be As Left values.

Accredited by the American Association for Laboratory Accreditation (A2LA) under Calibration Laboratory Code 115953 and Certificate Number 1550.01. This laboratory meets the requirements of ISO/IEC 17025:2005 *General Requirements for the Competence of Testing and Calibration Laboratories.* This laboratory also meets the requirements of ANSI/NCSL Z540-1-1994 and any additional program requirements in the field of calibration.

Quality Control Services, Inc.
Metrology Laboratory Manager
E-mail dthompson@qc-services.com

Date: 03/21/17

Signature David S. Thompson

This document shall not be reproduced, except in full, without the written approval of Quality Control Services Mass Laboratory.
Member: National Conference of Standards Laboratories and Weights & Measures

Established 1974

QUALITY CONTROL SERVICES

LABORATORY EQUIPMENT • SALES • SERVICE • CALIBRATION • REPAIRS
2340 SE 11TH Ave. Portland, Oregon 97214 • Box 14831 Portland, Oregon 97293
(503) 236-2712 • FAX (503) 235-2535 • www.qc-services.com

ACCREDITED
Calibration Services
Certificate Number: 1550.01
Laboratory code: 115953

Report of Calibration

Firm: Dirigo Laboratories
Address: 11785 SE Hwy 212, Ste 305
City/State/Zip: Clackamas, OR 97015

Test Completed: 01/15/16
Purchase Order: 1001
Traceable Number: 20152489

Test Item: 20lb and 10lb Individual Grip Handle Weights
Serial No.: Listed in Table

Manufacturer: Unknown

Laboratory Environment at time of test

Temperature °C	Pressure mmHg	Humidity %RH
21.448	760.64	44.58

Conventional Mass Value

Nominal Value	As Found pounds	As Found Correction* (mg)	Uncertainty (mg)	Tolerance (mg)
20lb #098	19.9995450	-206.4	6.4	910
10lb #097	10.0006510	295.3	5.1	450
10lb #051	10.0003421	155.2	5.1	450

*Correction is the difference between the conventional mass value of a weight and its nominal value.

Comments: These weights were received in good condition and were within NIST Handbook 105-1 Class F tolerances As Found. No adjustments or changes were made so As Found values should be considered to be As Left values.

Accredited by the American Association for Laboratory Accreditation (A2LA) under Calibration Laboratory Code 115953 and Certificate Number 1550.01. This laboratory meets the requirements of ISO/IEC 17025:2005 *General Requirements for the Competence of Testing and Calibration Laboratories.* This laboratory also meets the requirements of ANSI/NCSL Z540-1-1994 and any additional program requirements in the field of calibration.

Quality Control Services, Inc.
Metrology Laboratory Manager
E-mail dthompson@qc-services.com

Date: 01/15/16

Signature David S. Thompson

This document shall not be reproduced, except in full, without the written approval of Quality Control Services Mass Laboratory.

Member: National Conference of Standards Laboratories and Weights & Measures

Established 1974

QUALITY CONTROL SERVICES

LABORATORY EQUIPMENT • SALES • SERVICE • CALIBRATION • REPAIRS
2340 SE 11TH Ave. Portland, Oregon 97214 • Box 14831 Portland, Oregon 97293
(503) 236-2712 • FAX (503) 235-2535 • www.qc-services.com

ACCREDITED
CERTIFICATE #1550.01

PFS Teco
11785 SE Hwy 212 STE#305
Clackamas, OR 97015

Report Number: DIRI0134307497181218

A2LA ACCREDITED
CERTIFICATE OF CALIBRATION WITH DATA

INSTRUMENT INFORMATION

Item	Make	Model	Serial Number	Customer ID	Location
Balance	Sartorius	ENTRIS224-1S	34307497	#107	Lab
Units	**Readability**	**SOP**	**Cal Date**	**Last Cal Date**	**Cal Due Date**
g	0.0001	QC012	12/18/18	6/13/18	12/2019

FUNCTIONAL CHECKS

ECCENTRICITY
Test Wt: 100 Tol: 0.0003
As-Found: Pass: ☑ Fail: ☐
As-Left: Pass: ☑ Fail: ☐

LINEARITY
Test Wt: 50 x 4 Tol: 0.0002
As-Found: Pass: ☑ Fail: ☐
As-Left: Pass: ☑ Fail: ☐

STANDARD DEVIATION
Test Wt: 100 Tol: 0.0001

1. 100.0001	5. 100.0002	9. 100.0001
2. 100.0001	6. 100.0001	10. 100.0001
3. 100.0001	7. 100.0001	Result
4. 100.0001	8. 100.0002	0.00004

ENVIRONMENTAL CONDITIONS
☐ Good ☑ Fair ☐ Poor
Temperature: 21.3°C

A2LA ACCREDITED SECTION OF REPORT

Standard	As-Found	As-Left	Expanded Uncertainty
200	200.0002	200.0001	0.00014
100	100.0001	100.0001	0.00014
50	50.0003	50.0001	0.00014
20	20.0001	20.0001	0.00014
1	1.0001	1.0000	0.00014
0.1	0.1000	0.1000	0.00014

CALIBRATION STANDARDS

Item	Make	Model	Serial Number	Cal Date	Cal Due Date	NIST ID
Weight Set	R.L./Troemner	10kg to 1mg	G782	1/3/18	1/2019	20172421

Permanent Information Concerning this Equipment:
12 month calibration cycle.

Comments/Info Concerning this Calibration:
12/18 - RH = 56%. Adjusted span.

Report prepared/reviewed by: ServiceTech JC **Date:** 12/28/18 **Technician:** R.Kauble
Signature:

THIS CERTIFICATE SHALL NOT BE REPRODUCED WITHOUT THE APPROVAL OF QUALITY CONTROL SERVICES, INC.

The uncertainty is calculated according to the ISO Guide to the Expression of Uncertainty in Measurement and includes the uncertainty of standards used combined with the observed standard deviation and readability of the unit under test. The uncertainty is expanded with a k factor of 2 for an approximate 95% level of confidence. Instruments listed above were calibrated using standards traceable to the National Institute of Standards and Technology (NIST). Calibration data reflect results at the time and location of calibration. Calibration data should be reviewed to insure that the instrument is performing to its required accuracy. Calibrations comply with ISO/IEC 17025 and ANSI/Z540-1-1994 quality standards.

Member: National Conference of Standards Laboratories and Weights & Measures

PT ID: DIRI01

DICK MUNNS COMPANY
LIQUID & GAS FLOW CALIBRATION

ISO 17025 ACCREDITED
CL-122

CERTIFICATE OF CALIBRATION

CUSTOMER:	**PFS-TECO :** CLACKAMAS, OR	**CALIBRATION DATE:**	03/14/2019
PO NUMBER:	N/A	**CALIBRATION DUE:**	03/14/2020
INST. MANUFACTURER:	DWYER	**PROCEDURE:**	T.O.33K6-4-1769-1
INST. DESCRIPTION:	VELOMETER	**CALIBRATION FLUID:**	AIR @ 14.7 PSIA 70°F
MODEL NUMBER:	471	**RECEIVED CONDITION:**	WITHIN MFG. SPECS.
SERIAL NUMBER:	CP288559 (ID# 095)	**LEFT CONDITION:**	WITHIN MFG. SPECS.
RATED UNCERTAINTY:	SEE NOTES BELOW.	**AMBIENT CONDITIONS:**	762 mm HGA 43% RH 69°F
UNCERTAINTY GIVEN:	± .20% RD ; k=2	**CERTIFICATE FILE #:**	490265.2019

NOTES: ± 3% FS (0-500 / 0-1500) *** ± 4% F.S. (0-5000) ***± 5% F.S. (0-15000) *** ± 2 °F

NOTES CONT. : Q.MANUAL IM 1.5 REV 2017.1 DATED 7-18-2017

UUT INDICATED FT/MIN	DM.STD. ACTUAL FT/MIN	UUT INDICATED DEG. F	DM STD. ACTUAL DEG. F
64	65	0 TO 200°F	0 TO 200°F
110	112	43.4	43.5
206	210	69.0	68.9
498	509	99.4	99.2
503	505		
1049	1058		
1497	1514		
509	513		
3419	3460		
4992	5068		
5136	5235		
13928	14232		

STANDARDS USED:		
A220: 12" WIND TUNNEL 0 - 8000 FPM | CMC ± .203% RD | TRACE# 1520423238	DUE	05/23/2019
A24: HART SCIENTIFIC TEMP. STANDARD | ± .024 F | TRACE# 1520423238	DUE	03/07/2020

All instruments used in the performance of the shown calibration have traceability to the National Institute of Standards and Technology (NIST). The uncertainty ratio between the calibration standards (DM.STD.) used and the unit under test (UUT) is a minimum of 4:1, unless otherwise noted. Calibration has been performed per the shown procedure number, in accordance with ISO 10012:2003, ISO 17025:2005, ANSI/NCSL-Z-540.3, and/or MIL-STD-45662A. Test methods: API2530-92 & ASME MFC-3M-1989.

Dick Munns Company • 11133 Winners Circle • Los Alamitos, CA 90720
Phone (714) 827-1215 • Fax (714) 827-0823

This Calibration Certificate shall not be reproduced except in full without approval by DICK MUNNS COMPANY. The data shown applies only to the instrument being calibrated and under the stated conditions of calibration.

Date: 3/14/2019

Approved By:

Calibration Technician:

Model 1430 Microtector® Electronic Point Gage

Installation and Operating Instructions

Model 1430 Microtector® Portable Electronic Point Gage combines modern, solid-state integrated circuit electronics with a time-proven point gage manometer to provide fast, accurate pressure measurements.

SPECIFICATIONS AND FEATURES

- Accurate and repeatable to ± .00025 inches water column
- Pressure range: 0 - 2″ w.c., positive, negative, or differential pressures
- Non-toxic and inexpensive gage fluid consists of distilled water mixed with a small amount of fluorescein green color concentrate
- Convenient, portable, lightweight and self-contained, the unit requires no external power connections and is operated by a 1.5 volt penlight cell
- A.C. detector current eliminates point plating, fouling and erosion
- Micrometers are manufactured in accordance with ASME B89.1.13-2001, and are traceable to a standard at the National Institute of Standards and Technology
- Three-point mounting, dual leveling adjustment, and circular level vial assure rapid setup
- Durablock® precision-machined acrylic plastic gage body
- Sensitive 0 - 50 microamp D.C. meter acts as a detector and also indicates battery and probe condition
- Heavy 2″ thick steel base plate provides steady mounting
- Top-quality glass epoxy circuit board and solid-state, integrated circuit electronics
- Electronic enclosure of tough, molded styrene acrylonitrile provides maximum protection to components yet allows easy access to battery compartment
- Rugged sheet steel cover and carrying case protects the entire unit when not in use
- Accessories included are (2) 3-foot lengths Tygon® tubing, (2) 1/8″ pipe thread adapters and 3/4 oz. bottle of fluorescein green color concentrate with wetting agent

Maximum pressure: 100 psig with optional pipe thread connections.

Tygon® is a registered trademark of Saint-Gobain Corporation

DWYER INSTRUMENTS, INC.
P.O. BOX 373
MICHIGAN CITY, INDIANA 46361,U.S.A
Phone: 219/879-8000
Fax: 219/872-9057
www.dwyer-inst.com
e-mail: info@dwyer-inst.com

PRAXAIR
Making our planet more productive

DocNumber: 225861

Praxair Distribution, Inc.
5700 S. Alameda Street
Los Angeles CA 90058
Tel: 323-585-2154
Fax: 714-542-6689
PGVP ID: F22018

CERTIFICATE OF ANALYSIS / EPA PROTOCOL GAS

Customer & Order Information

PXPKG TUALATIN OR H
10450 SW TUALATIN SHERWOOD ROAD
TUALATIN OR 97062

Certificate Modification Date: 10/01/2018
Praxair Order Number: 70743165
Part Number: NI CD17CO8E-AS

Fill Date: 09/26/2018
Lot Number: 70086826911
Cylinder Style & Outlet: AS CGA 590
Cylinder Pressure and Volume: 1290 psig 140 ft3

Certified Concentration

ProSpec EZ Cert

Expiration Date:	10/01/2026	NIST Traceable
Cylinder Number:	SA17187	Expanded Uncertainty
17.00 %	Carbon dioxide	± 0.3 %
4.31 %	Carbon monoxide	± 0.6 %
16.99 %	Oxygen	± 0.2 %
Balance	Nitrogen	

Certification Information:

Certification Date: 10/01/2018 Term: 96 Months Expiration Date: 10/01/2026

This cylinder was certified according to the 2012 EPA Traceability Protocol, Document #EPA-600/R-12/531, using Procedure G1

Do Not Use this Standard if Pressure is less than 100 PSIG.

CO2 responses have been corrected for Oxygen IR Broadening effect. O2 responses have been corrected for CO2 interference

Analytical Data:

(R=Reference Standard, Z=Zero Gas, C=Gas Candidate)

1. **Component:** Carbon dioxide

Requested Concentration: 17 %
Certified Concentration: 17.00 %
Instrument Used: Horiba VIA-510 S/N 20C194WK
Analytical Method: NDIR
Last Multipoint Calibration: 09/21/2018

First Analysis Data:			Date 10/01/2018
Z: 0	R: 20.1	C: 17	Conc: 17
R: 20.1	Z: 0	C: 17	Conc: 17
Z: 0	C: 17.01	R: 20.11	Conc: 17.01
UOM: %		Mean Test Assay:	17 %

Reference Standard: Type / Cylinder #: GMIS / CC187238
Concentration / Uncertainty: 20.10 % ±0.24%
Expiration Date: 06/07/2026
Traceable to: SRM # / Sample # / Cylinder #: RGM#CC193512 / N/A / RGM#CC193512
SRM Concentration / Uncertainty: 26.99% / ±0.05%
SRM Expiration Date: 05/15/2023

Second Analysis Data:			Date
Z: 0	R: 0	C: 0	Conc: 0
R: 0	Z: 0	C: 0	Conc: 0
Z: 0	C: 0	R: 0	Conc: 0
UOM: %		Mean Test Assay:	%

2. **Component:** Carbon monoxide

Requested Concentration: 4.25 %
Certified Concentration: 4.31 %
Instrument Used: Horiba VIA-510 S/N UB9UCSYX
Analytical Method: NDIR
Last Multipoint Calibration: 09/21/2018

First Analysis Data:			Date 10/01/2018
Z: 0	R: 5	C: 4.31	Conc: 4.31
R: 5	Z: 0	C: 4.3	Conc: 4.3
Z: 0	C: 4.32	R: 5.01	Conc: 4.32
UOM: %		Mean Test Assay:	4.31 %

Reference Standard: Type / Cylinder #: GMIS / CC242633
Concentration / Uncertainty: 5.00 % ±0.543%
Expiration Date: 04/03/2025
Traceable to: SRM # / Sample # / Cylinder #: SRM 2642a / 51-D-23 / FF23106
SRM Concentration / Uncertainty: 7.859% / ±0.039%
SRM Expiration Date: 07/15/2019

Second Analysis Data:			Date
Z: 0	R: 0	C: 0	Conc: 0
R: 0	Z: 0	C: 0	Conc: 0
Z: 0	C: 0	R: 0	Conc: 0
UOM: %		Mean Test Assay:	%

3. **Component:** Oxygen

Requested Concentration: 17 %
Certified Concentration: 16.99 %
Instrument Used: OXYMAT 5E
Analytical Method: Paramagnetic
Last Multipoint Calibration: 09/04/2018

First Analysis Data:			Date 10/01/2018
Z: 0	R: 20.86	C: 16.99	Conc: 16.99
R: 20.86	Z: 0	C: 16.99	Conc: 16.99
Z: 0	C: 16.99	R: 20.86	Conc: 16.99
UOM: %		Mean Test Assay:	16.99 %

Reference Standard: Type / Cylinder #: GMIS / CC75874
Concentration / Uncertainty: 20.86 % ±0.111%
Expiration Date: 11/07/2025
Traceable to: SRM # / Sample # / Cylinder #: SRM 2659a / 71-E-19 / FF22331
SRM Concentration / Uncertainty: 20.863% / ±0.021%
SRM Expiration Date: 09/23/2021

Second Analysis Data:			Date
Z: 0	R: 0	C: 0	Conc: 0
R: 0	Z: 0	C: 0	Conc: 0
Z: 0	C: 0	R: 0	Conc: 0
UOM: %		Mean Test Assay:	%

Analyzed By Jose Vasquez

Certified By Danielle Burns

Information contained herein has been prepared at your request by qualified experts within Praxair Distribution, Inc. While we believe that the information is accurate within the limits of the analytical methods employed and is complete to the extent of the specific analyses performed, we make no warranty or representation as to the suitability of the use of the information for any purpose. The information is offered with the understanding that any use of the information is at the sole discretion and risk of the user. In no event shall the liability of Praxair Distribution, Inc., arising out of the use of the information contained herein exceed the fee established for providing such information.

PRAXAIR
Making our planet more productive

DocNumber: 223791

Praxair Distribution, Inc.
5700 S. Alameda Street
Los Angeles CA 90058
Tel: 323-585-2154
Fax: 714-542-6689
PGVP ID: F22018

CERTIFICATE OF ANALYSIS / EPA PROTOCOL GAS

Customer & Order Information

PXPKG TUALATIN OR H
10450 SW TUALATIN SHERWOOD ROAD
TUALATIN OR 97062

Certificate Modification Date: 09/05/2018
Praxair Order Number: 70716136
Part Number: NI CD10CO33E-AS

Fill Date: 08/31/2018
Lot Number: 70086824308
Cylinder Style & Outlet: AS CGA 590
Cylinder Pressure and Volume: 2000 psig 140 ft3

Certified Concentration

ProSpec EZ Cert

Expiration Date:	09/05/2026	NIST Traceable
Cylinder Number:	CC170624	Expanded Uncertainty
10.00 %	Carbon dioxide	± 0.3 %
2.51 %	Carbon monoxide	± 0.7 %
10.50 %	Oxygen	± 0.6 %
Balance	Nitrogen	

Certification Information:

Certification Date: 09/05/2018 Term: 96 Months Expiration Date: 09/05/2026

This cylinder was certified according to the 2012 EPA Traceability Protocol, Document #EPA-600/R-12/531, using Procedure G1.

Do Not Use this Standard if Pressure is less than 100 PSIG.

CO responses have been corrected for CO2 interference. CO2 responses have been corrected for Oxygen IR Broadening effect. O2 responses have been corrected for CO2 interference.

Analytical Data:

(R=Reference Standard, Z=Zero Gas, C=Gas Candidate)

1. **Component:** Carbon dioxide

Requested Concentration: 10 %
Certified Concentration: 10.00 %
Instrument Used: Horiba VIA-510 S/N 20C194WK
Analytical Method: NDIR
Last Multipoint Calibration: 08/20/2018

First Analysis Data:							Date 09/05/2018
Z:	0	R:	14.02	C:	10	Conc:	10
R:	14.02	Z:	0	C:	10	Conc:	10
Z:	0	C:	10	R:	14.02	Conc:	10
UOM:	%					Mean Test Assay:	10 %

Reference Standard: Type / Cylinder #: GMIS / CC141375
Concentration / Uncertainty: 14.02 % ±0.3%
Expiration Date: 06/11/2026
Traceable to: SRM # / Sample # / Cylinder #: SRM 1675b / 6-F-51 / CAL014538
SRM Concentration / Uncertainty: 13.963% / ±0.034%
SRM Expiration Date: 05/16/2022

Second Analysis Data:							Date
Z:	0	R:	0	C:	0	Conc:	0
R:	0	Z:	0	C:	0	Conc:	0
Z:	0	C:	0	R:	0	Conc:	0
UOM:	%					Mean Test Assay:	%

2. **Component:** Carbon monoxide

Requested Concentration: 2.5 %
Certified Concentration: 2.51 %
Instrument Used: Horiba VIA-510 S/N UB9UCSYX
Analytical Method: NDIR
Last Multipoint Calibration: 08/20/2018

First Analysis Data:							Date 09/05/2018
Z:	0	R:	2.48	C:	2.51	Conc:	2.51
R:	2.48	Z:	0	C:	2.51	Conc:	2.51
Z:	0	C:	2.51	R:	2.48	Conc:	2.51
UOM:	%					Mean Test Assay:	2.51 %

Reference Standard: Type / Cylinder #: GMIS / CC102045
Concentration / Uncertainty: 2.48 % ±0.448%
Expiration Date: 04/03/2025
Traceable to: SRM # / Sample # / Cylinder #: SRM 2641a / 52-D-30 / CAL017193
SRM Concentration / Uncertainty: 4.009% / ±0.017%
SRM Expiration Date: 07/15/2019

Second Analysis Data:							Date
Z:	0	R:	0	C:	0	Conc:	0
R:	0	Z:	0	C:	0	Conc:	0
Z:	0	C:	0	R:	0	Conc:	0
UOM:	%					Mean Test Assay:	%

3. **Component:** Oxygen

Requested Concentration: 10.5 %
Certified Concentration: 10.50 %
Instrument Used: OXYMAT 5E
Analytical Method: Paramagnetic
Last Multipoint Calibration: 09/04/2018

First Analysis Data:							Date 09/05/2018
Z:	0	R:	9.88	C:	10.49	Conc:	10.49
R:	9.88	Z:	0	C:	10.5	Conc:	10.5
Z:	0	C:	10.5	R:	9.88	Conc:	10.5
UOM:	%					Mean Test Assay:	10.5 %

Reference Standard: Type / Cylinder #: NTRM / DT0010402
Concentration / Uncertainty: 9.88 % ±0.4%
Expiration Date: 11/18/2022
Traceable to: SRM # / Sample # / Cylinder #: NTRM #170701 / N/A / NTRM #DT0010402
SRM Concentration / Uncertainty: 9.875% / ±0.04%
SRM Expiration Date: 11/18/2022

Second Analysis Data:							Date
Z:	0	R:	0	C:	0	Conc:	0
R:	0	Z:	0	C:	0	Conc:	0
Z:	0	C:	0	R:	0	Conc:	0
UOM:	%					Mean Test Assay:	%

Analyzed By Danielle Burns

Certified By Jose Vasquez

Information contained herein has been prepared at your request by qualified experts within Praxair Distribution, Inc. While we believe that the information is accurate within the limits of the analytical methods employed and is complete to the extent of the specific analyses performed, we make no warranty or representation as to the suitability of the use of the information for any purpose. The information is offered with the understanding that any use of the information is at the sole discretion and risk of the user. In no event shall the liability of Praxair Distribution, Inc., arising out of the use of the information contained herein exceed the fee established for providing such information.

Verification of Standardization

of

Tape Measure

by

Advanced Calibration Technologies
28111 S.E. Wally Road
Boring, OR 97009
1-800-259-5058

ACCREDITED
Calibration
Cert# 1342.01

Customer:	PFS Teco, Inc	Street:	11785 Southeast Highway 212 Suite 305
City:	Clackamas State: OR	Zip:	97015 Location: In House
Machine Manufacturer:	Dewalt	Model:	16' Tape Measure
Capacity:	0.000 - 192.000 inches 0.125 Divisions	Serial #:	090
Calibration Cycle:	12 Months	Lab ID#:	#090
Previous Calibration Date:	January 2019	Calibration Procedure:	Ad-Tek SR
Equipment Used:	Gauge Blocks S/N: ADGB002	Action Recommended:	
If Other, Explain:			

Verification Data

Purpose:
This method provides instructions for checking the critical dimensions of the equipment.
Tolerance:
Equipment shall meet the dimensional tolerances specified in the applicable test method.
Procedure:
Verified using manufacturer's procedures.

Actual Dimensions (inches)	Unit Under Test As Found (inches)	Unit Under Test As Left (inches)	Difference (inches)
0.0000	0.000	0.000	0.000
0.1250	0.050	0.050	-0.075
0.2500	0.250	0.250	0.000
0.5000	0.500	0.500	0.000
0.7500	0.750	0.750	0.000
1.0000	1.000	1.000	0.000
3.0000	3.000	3.000	0.000
5.0000	5.000	5.000	0.000
7.0000	7.000	7.000	0.000
9.0000	9.000	9.000	0.000
12.0000	12.000	12.000	0.000

The overall condition of the device as found:	Within Specification
The overall condition of the device as left:	Within Specification
The measurement of uncertainty (MU) was calculated to be:	0.00060

File No: PFS-101666-0119D0120-AH-SR-090

Temperature: 72.1°F Humidity: 41.1%

The equipment used in the verification of this instrument has been calibrated and is NIST traceable.
The uncertainty of calibration was estimated at the 95% confidence level, coverage factor (k=2).

Remarks:

This certificate of verification is issued as a statement of fact that on the date of verification the above instrument had an accuracy as indicated and was calibrated to meet the requirements of the manufacturer's specifications. This certificate should not be construed or regarded as a guarantee or warranty of any kind that the instrument will retain the same percentage of accuracy as determined on the date when the verification was performed and reported. Ad-Tek, Inc. hereby expressly disclaims any and all liability for damage or loss by all parties arising or resulting from deterioration, obsolescence, malfunction, subsequent calibration performed by another agency or substandard performance of said instrument.

This report and certificate of verification shall not be reproduced except in full, without the written approval of Ad-Tek, Inc.

Service Technician: Alisa Houser Date of Service: January 16, 2019

Technical Manager: Nicole Ostrowski Date Next Due: January 2020

We sincerely appreciate your business and thank you for selecting Advanced Calibration Technologies, Inc. for servicing your equipment.
To reschedule, please call (800) 259-5058. Thank You.

Verification of Standardization

of

Calipers

by

Advanced Calibration Technologies
28111 S.E. Wally Road
Boring, OR 97009
1-800-259-5058

ACCREDITED
Calibration
Cert# 1342.01

Customer:	PFS Teco, Inc	Street:	11785 Southeast Highway 212 Suite 305
City:	Clackamas State: OR	Zip:	97015 Location: In House
Machine Manufacturer:	General	Model:	6" Digital Caliper
Capacity:	0.0000 - 6.0000 inches 0.0005 Divisions	Serial #:	092
Calibration Cycle:	12 Months	Lab ID#:	092
Previous Calibration Date:	January 2018	Calibration Procedure:	Ad-Tek DC
Equipment Used:	Gauge Blocks S/N: ADGB002	Action Recommended:	
If Other, Explain:			

Verification Data

Purpose:

This method provides instructions for checking the critical dimensions of the inside diameter of the equipment.

Tolerance:

Equipment shall meet the dimensional tolerances specified by the manufacturer for the inside diameter.

Procedure:

Verified using the procedure to meet manufacturer's tolerance for inside diameter.

Actual Dimensions (inches)	Unit Under Test As Found (inches)	Unit Under Test As Left (inches)	Difference (inches)
0.0000	0.0000	0.0000	0.0000
0.0500	0.0500	0.0500	0.0000
0.1000	0.1000	0.1000	0.0000
0.1010	0.1010	0.1010	0.0000
0.1050	0.1050	0.1050	0.0000
0.1100	0.1100	0.1100	0.0000
0.1500	0.1500	0.1500	0.0000
0.5000	0.5000	0.5000	0.0000
1.0000	1.0000	1.0000	0.0000
3.0000	2.9995	2.9995	-0.0005
5.0000	4.9990	4.9990	-0.0010

The overall condition of the device as found:	Within Specification
The overall condition of the device as left:	Within Specification
The measurement of uncertainty (MU) was calculated to be:	0.00062

This certificate does not reflect measurements for inside jaws, step height, or depth.

File No: PFS-101666-0119D0120-AH-DC-092

Temperature: 68.2°F Humidity: 41.6%

The equipment used in the verification of this instrument has been calibrated and is NIST traceable.
The uncertainty of calibration was estimated at the 95% confidence level, coverage factor (k=2).

Remarks:

This certificate of verification is issued as a statement of fact that on the date of verification the above instrument had an accuracy as indicated and was calibrated to meet the requirements of the manufacturer's specifications. This certificate should not be construed or regarded as a guarantee or warranty of any kind that the instrument will retain the same percentage of accuracy as determined on the date when the verification was performed and reported. Ad-Tek, Inc. hereby expressly disclaims any and all liability for damage or loss by all parties arising or resulting from deterioration, obsolescence, malfunction, subsequent calibration performed by another agency or substandard performance of said instrument.

This report and certificate of verification shall not be reproduced except in full, without the written approval of Ad-Tek, Inc.

Service Technician: Alisa Houser Date of Service: January 15, 2019

Technical Manager: Nicole Ostrowski Date Next Due: January 2020

We sincerely appreciate your business and thank you for selecting Advanced Calibration Technologies, Inc. for servicing your equipment.
To reschedule, please call (800) 259-5058. Thank You.

ED_005996_00000513-00289

J-2000

owner's manual

DELMHORST®
INSTRUMENT CO.

WHEN ACCURACY IS THE POINT.™

Calibration complies with ISO/IEC 17025, ANSI/NCSL Z540-1, and 9001

ACCREDITED A2LA Certificate No. 1750.01 Calibration

Cert. No.: 4198-9765787

Traceable® Certificate of Calibration for Hand Held Barometer

Customer :PFS TECO Suite 305 ,11786 SE Highway 212 ,Clackamas ,OR-97015 ,U.S.A.

Instrument Identification:

Model: 4198, S/N: 80531676 Manufacturer: Control Company

Standards/Equipment:

Description	Serial Number	Due Date	NIST Traceable Reference
Digital Barometer	D4540001	09 Oct 2018	1000415948
Digital Thermometer	111879345	09 Apr 2019	4000-9377595

Certificate Information:

Technician: 57 Procedure: CAL-32 Cal Date: 29 Aug 2018 Cal Due Date: 29 Aug 2019

Test Conditions: 62.73%RH 23.92°C 1018mBar

Calibration Data:

Unit(s)	Nominal	As Found	In Tol	Nominal	As Left	In Tol	Min	Max	±U	TUR
°C	24.10	24.1	Y	23.51	23.9	Y	22.01	25.01	0.05	>4:1
mb/hPa	551.55	552	Y	551.62	546	Y	544	560	0.62	>4:1
mb/hPa	751.22	744	Y	748.87	746	Y	741	757	0.62	>4:1
mb/hPa	1015.90	1011	Y	1018.22	1017	Y	1010	1026	0.62	>4:1

This certificate indicates Traceability to standards provided by (NIST) National Institute of Standards and Technology and/or a National Standards Laboratory.

A Test Uncertainty Ratio of at least 4:1 is maintained unless otherwise stated and is calculated using the expanded measurement uncertainty. Uncertainty evaluation includes the instrument under test and is calculated in accordance with the ISO "Guide to the Expression of Uncertainty in Measurement : (GUM). The uncertainty represents an expanded uncertainty using a coverage factor k=2 to approximate a 95% confidence level. In tolerance conditions are based on test results falling within specified limits with no reduction by the uncertainty of the measurement. The results contained herein relate only to the item calibrated. This certificate shall not be reproduced except in full, without written approval of Control Company.

Nominal=Standard's Reading; As Left=Instrument's Reading; In Tol=In Tolerance; Min/Max=Acceptance Range; ± U=Expanded Measurement Uncertainty; TUR=Test Uncertainty Ratio; Accuracy=±(Max-Min)/2; Min=As Left Nominal(Rounded) – Tolerance; Max= As Left Nominal(Rounded) + Tolerance:

Nicol Rodriguez, Quality Manager

Aaron Judice, Technical Manager

Note :

Maintaining Accuracy:

In our opinion once calibrated your Hand Held Barometer should maintain its accuracy. There is no exact way to determine how long calibration will be maintained. Hand Held Barometer change little, if any at all, but can be affected by aging, temperature, shock, and contamination.

Recalibration:

For factory calibration and re-certification traceable to National Institute of Standards and Technology contact Control Company.

CONTROL COMPANY 12554 Galveston RD Suite B230 Webster TX USA 77598
Phone 281 482-1714 Fax 281 482-9448 sales@control3.com www.control3.com

Control Company is an ISO/IEC 17025:2005 Calibration Laboratory Accredited by (A2LA) American Association for Laboratory Accreditation, Certificate No. 1750.01.
Control Company is ISO 9001:2008 Quality Certified by DNV GL, Certificate No. CERT-01805-2006-AQ-HOU-RvA.
International Laboratory Accreditation Cooperation (ILAC) - Multilateral Recognition Arrangement (MRA).

Traceable® is a registered trademark of Control Company

© 2017 Control Company