Certification Test Report
Non-Confidential Business Information (Non-CBI)

Central Boiler, Inc.
Wood-Fired Hydronic Heater
Model: Classic Edge 360

Prepared for:	Central Boiler, Inc. 20502 160th Street Greenbush, MN 56726
Prepared by:	OMNI-Test Laboratories, Inc. 13327 NE Airport Way Portland, OR 97230 (503) 643-3788
Test Period:	12/9/19 – 12/20/19
Report Date:	January 21, 2020
Report Number:	0117WB040E

All data and information contained in this report are confidential and proprietary to Central Boiler, Inc. Its significance is subject to the adequacy and representative character of the samples and to the comprehensiveness of the tests, examinations, or surveys made. The contents of this report cannot be copied or quoted, except in full, without specific, written authorization from Central Boiler, Inc. and OMNI-Test Laboratories, Inc. No use of the OMNI-Test Laboratories, Inc. name, logo, or registered mark (O-TL) is permitted, except as expressly authorized by OMNI-Test Laboratories, Inc. in writing.

- Document Edition # 000 -

AUTHORIZED SIGNATORIES

This report has been reviewed and approved by the following authorized signatories:

Evaluator:

Bruce Davis, Technician
OMNI-Test Laboratories, Inc.

Reviewer:

Alex Tiegs, QA Administrator
OMNI-Test Laboratories, Inc.

TABLE OF CONTENTS

PREFACE ..... (3 pages)

1. INTRODUCTION/APPLIANCE DESCRIPTION/PHOTOGRAPHS/DRAWINGS 4
   - Introduction 5
   - Individual Run Summary 6
   - Appliance Description 8
   - Photographs 9
   - Test Equipment Schematic 13

2. QUALITY ASSURANCE/QUALITY CONTROL 14
   - Sample Analysis 16
   - Calibrations 30

3. OWNER'S MANUAL 50

4. TEST DATA BY RUN 121
   - Run 1 124
   - Run 2 144
   - Run 3 205
   - Run 4 263
   - Run 5 354
   - Run 6 432

5. TESTING PROCEDURES AND RESULTS 466

   Summary Tables
   - Table 1a – Data Summary Part A 467
   - Table 1b – Data Summary Part B 468
   - Table 1c – Hang Tag Information 469
   - Table 2b – Year-Round Use Weighting 470
   - Higher Heating Value Weighted Results 471
   - Test Results and Discussion 472

6. EXAMPLE CALCULATIONS 473

Section 1

Introduction/Appliance Description/Photographs/Drawings

INTRODUCTION

Central Boiler, Inc. retained OMNI-Test Laboratories, Inc. (*OMNI*) to perform certification emissions testing on the Classic Edge 360 boiler in accordance with U.S. EPA 40 CFR Part 60, Subpart QQQQ – Standards of Performance for New Residential Hydronic Heaters and Forced-Air Furnaces. The Classic Edge 360 furnace, when tested with Oak cordwood, meets the 2020 particulate matter emission limit of a weighted average 0.15 lbs/mmBtu heat output and a maximum emissions limit per individual category 0.15 lbs/mmBtu heat output.

Emissions (lb/mmbtu output)	
Heating Season	0.11
Year-Round Use	0.12

The testing was performed at *OMNI*'s testing facility in Portland, Oregon. The unit was received in good condition and logged in on December 6, 2019 then assigned and labeled with *OMNI* ID #2399. *OMNI* representatives Bruce Davis conducted the certification testing and completed all testing by December 20, 2019.

The unit was conditioned for 48 hours prior to testing by operating it at a Category III heat output rate.

The testing method used is composed of four distinct aspects:

- **Particulate Matter Emissions**: Particulate matter sampling using a dilution tunnel via ASTM E2618-13, and ASTM E2515-11
- **Delivered Efficiency**: Using entering and exiting water temperature differences along with measured flow rate to determine useful heat output.
- **Thermal Efficiency and CO Emissions**: Measured using sections 13.7 through 13.10 of CSA B415-10.
- **Operation**: As dictated by ASTM E2618, the appliance is brought to operating temperature before adding the test fuel charge, providing for a hot-to-hot test cycle with measurements taken under constant heat draw conditions within pre-determined ranges. There is no attempt to modulate heat demand to simulate an indoor thermostat cycling on and off in response to changes in the indoor environment.

Four test categories are used within the "Operation" scope:

- **Category I**: Heat Output less than 15% of Manufacturer's Rated Heat Output Capacity
- **Category II**: Heat Output 16 To 24% of Manufacturer's Rated Heat Output Capacity
- **Category III**: Heat Output 25 To 50% of Manufacturer's Rated Heat Output Capacity
- **Category IV**: Manufacturer's Rated Heat Output Capacity

This test report shall not be reproduced, except in full, without written approval from *OMNI*. The test results presented herein apply only to the specific appliance tested.

INDIVIDUAL RUN SUMMARIES – Certification Testing

Run 1 - Test procedures followed to produce a Category IV burn; heat draw was adjusted to approximately 149,000 BTU's. Observed burn rate was calculated at 9.44 kg/h. Emissions results were calculated using particulate sampling from Oak cordwood, on a hot to hot cycle. Heat demand water temperature set to call for heat at 165 degrees Fahrenheit and to go off demand mode at 185 degrees Fahrenheit. No additional sampling anomalies occurred; this test run was determined to be valid for inclusion in the weighted average.

Run 2 - Test procedures followed to produce a Category II burn; heat draw was adjusted to approximately 31,000 BTU's. Heat demand water temperature set to call for heat at 165 degrees Fahrenheit and to go off demand mode at 185 degrees Fahrenheit. Observed burn rate was calculated at 2.10 kg/h. Emissions results were calculated using particulate sampling from Oak cordwood, on a hot to hot cycle. Emission results were found to be in excess of 0.15 lb/mmbtu output, two additional tests were conducted (tests 3 and 5) to omit this result. There was no obvious reason for the result, it was deemed an anomaly.

Run 3 - Test procedures followed to produce a Category II burn; heat draw was adjusted to approximately 34,000 BTU's. Heat demand water temperature set to call for heat at 165 degrees Fahrenheit and to go off demand mode at 185 degrees Fahrenheit. Observed burn rate was calculated at 2.21 kg/h. Emissions results were calculated using particulate sampling from Oak cordwood, on a hot to hot cycle. No sampling anomalies occurred; this test run was determined to be valid for inclusion in the weighted average.

Run 4 - Test procedures followed to produce a Category I burn; heat draw was adjusted to approximately 20,000 BTU's. Heat demand water temperature set to call for heat at 165 degrees Fahrenheit and to go off demand mode at 185 degrees Fahrenheit. Observed burn rate was calculated at 1.30 kg/h. Emissions results were calculated using particulate sampling from Oak cordwood, on a hot to hot cycle. No sampling anomalies occurred; this test run was determined to be valid for inclusion in the weighted average.

Run 5 - Test procedures followed to produce a Category II burn; heat draw was adjusted to approximately 35,000 BTU's. Heat demand water temperature set to call for heat at 165 degrees Fahrenheit and to go off demand mode at 185 degrees Fahrenheit. Observed burn rate was calculated at 2.26 kg/h. Emissions results were calculated using particulate sampling from Oak cordwood, on a hot to hot cycle. No sampling anomalies occurred; this test run was determined to be valid for inclusion in the weighted average.

Run 6 - Test procedures followed to produce a Category III burn; heat draw was adjusted to approximately 67,000 BTU's. Heat demand water temperature set to call for heat at 165 degrees Fahrenheit and to go off demand mode at 185 degrees Fahrenheit. Observed burn rate was calculated at 4.36 kg/h. Emissions results were calculated using particulate sampling from Oak cordwood, on a hot to hot cycle. No sampling anomalies occurred; this test run was determined to be valid for inclusion in the weighted average.

APPLIANCE DESCRIPTION

The Classic Edge 360 is a wood fired outdoor hydronic heater. It is designed to heat and circulate water in a closed loop, supplying energy to an existing system. Its heavy gauge steel structure consists of a large, roughly rectangular firebox constructed of either carbon steel or titanium enhanced stainless steel and is surrounded by a water jacket with an integrated heat exchanger. The unit is well insulated and protected by an outer sheet metal skin designed for outdoor installation.

Combustion air is regulated by a blower and multiple dampers which supply air to various parts of the firebox. Airflow through the firebox is "downdraft." This means that when operating properly, this design gasifies the wood fuel in the upper portion of the firebox and burns this gas below the grate in the lower portion of the firebox. Flue gasses are routed through the heat exchanger and exit through an 8" flue opening at the rear of the unit.

The Classic Edge 360 responds to heat demand by cycling the combustion blower on and off depending on water temperature. Combustion air dampers actuate in response to combustion gas temperature in order to promote low emissions output and efficient operation. The water temperature set point is user adjustable.

Other features of the Classic Edge 360 include:

- Overtemperature protection
- Atmospheric pressure vent for water circuit
- Network-enabled temperature logging
- Gasification chamber access door

The firebox of the Classic Edge 360 is approximately 28.75" deep, 20.75" wide, and 29.75" high. Firebox volume is 9.98 ft^3. The dry weight of the unit is 1460 lb and the approximate capacity of the water jacket is 150 gallons.

Central Boiler, Inc.
Classic Edge 360

Appliance Front

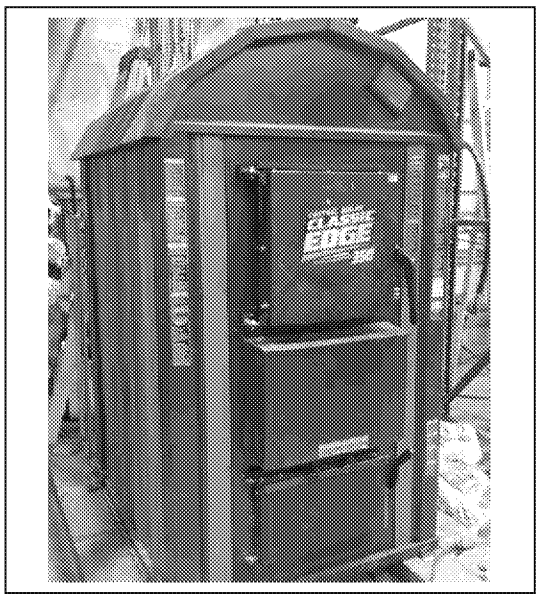

Appliance Right

Typical Preburn Fuel

Run 1 Fuel

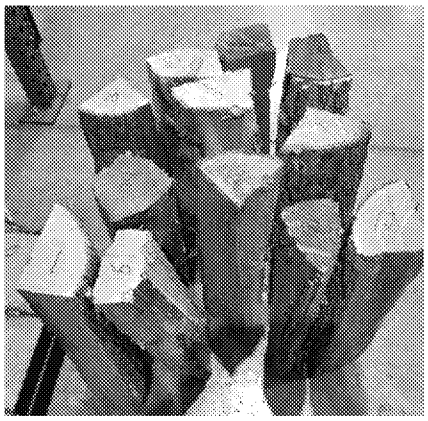

Run 1 Fuel – Loaded0

Run 2 Fuel

Run 2 Fuel – Loaded

Run 3 Fuel

Run 3 Fuel – Loaded

Run 4 Fuel

Run 4 Fuel – Loaded

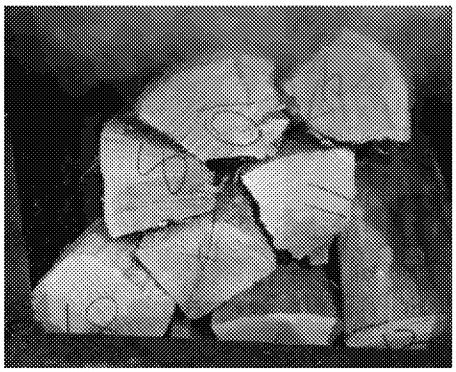

Run 5 Fuel

Run 5 Fuel – Loaded

Run 6 Fuel

Run 6 Fuel – Loaded

Test Equipment Schematic

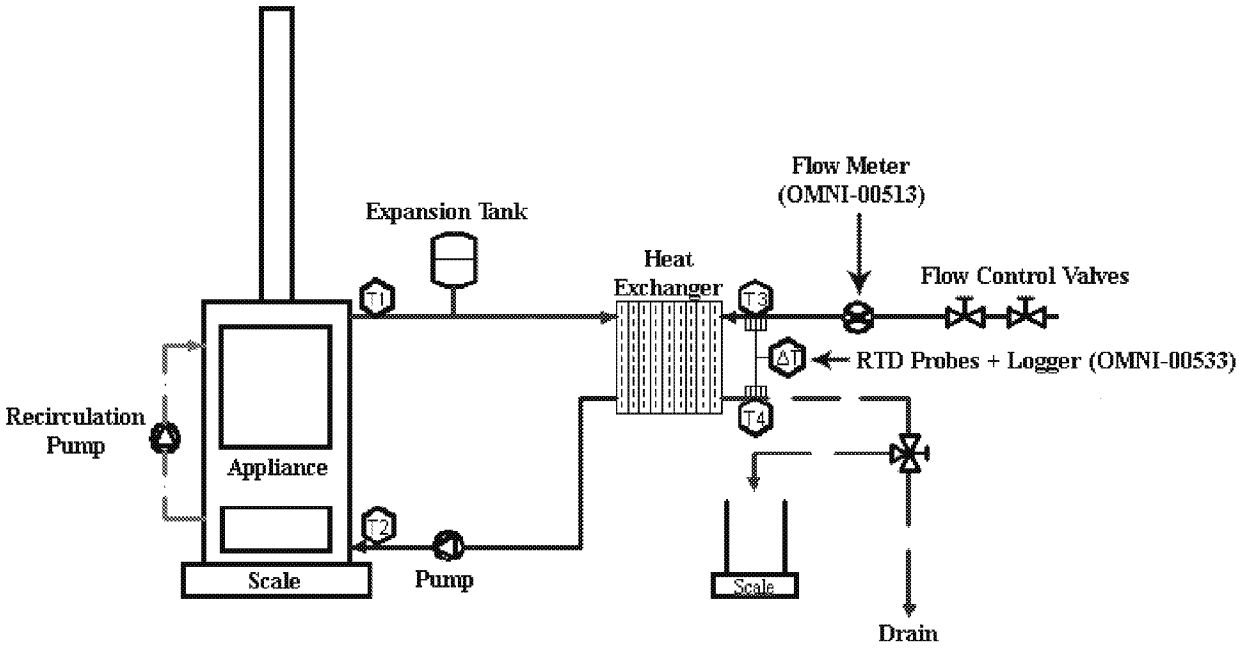

Section 2

Quality Assurance/Quality Control

QUALITY ASSURANCE/QUALITY CONTROL

OMNI follows the guidelines of ISO/IEC 17025, "General Requirements for the Competence of Testing and Calibration Laboratories," and the quality assurance/quality control (QA/QC) procedures found in *OMNI*'s Quality Assurance Manual.

OMNI's scope of accreditation includes, but is not limited to, the following:

- ANSI (American National Standards Institute) for certification of product to safety standards.
- To perform product safety testing by the International Accreditation Service, Inc. (formerly ICBO ES) under accreditation as a testing laboratory designated TL-130.
- To perform product safety testing as a "Certification Organization" by the Standards Council of Canada (SCC).
- Serving as a testing laboratory for the certification of wood heaters by the U.S. Environmental Protection Agency.

This report is issued within the scope of *OMNI*'s accreditation. Accreditation certificates are available upon request.

The manufacturing facilities and quality control system for the production of the Classic Edge 360 at Central Boiler's manufacturing facility were evaluated to determine if sufficient to maintain conformance with OMNI's requirements for product certification. OMNI has concluded that the manufacturing facilities, processes, and quality control system are adequate to produce the appliance congruous with the standards and model codes to which it was evaluated.

This report shall not be reproduced, except in full, without the written approval of OMNI-Test Laboratories, Inc.

Sample Analysis

Analysis Worksheets
Tared Filter, Probe, & O-Ring Data

OMNI-Test Laboratories, Inc.

ASTM E2618 Wood Heater Run Sheets

Client: Central Boiler Project Number: 0117WB040E Run Number: 1
Model: Edge 360 Tracking Number: 2399 Date: 12/9/19
Test Crew: B Davis
OMNI Equipment ID numbers: 637, 592, 283A

ASTM E2515 Lab Sheet

Assembled By: B Davis

Date/Time in Dessicator: 12/9/19

	Weighing #1	Weighing #2	Weighing #3	Weighing #4	Weighing #5
Date/Time:	12/13/19 0830	12/13/19 1046	12/19/19 0830		
R/H %:	22.1	13.5	15.1		
Temp:	69.4	72.8	71.9		
200 mg Audit:	199.9 ~~200.3~~	199.9	200.0		
2 g Audit:	2000.3	2000.3	2000.3		
100 g Audit:	99997.8	99997.9	99998.0		
Initials:	BD	BL	BL		

Train	Element	ID #	Tare (mg)	Weight (mg)	Weight (mg)	Weight (mg)	Weight (mg)	Weight (mg)
A (First Hour)	Front Filter	D930	117.9	119.1	119.2	✓		
	Rear Filter							
	Probe							
	O-Ring Set							
A (Remainder)	Front Filter	D931	118.9	128.4	128.2	✓		
	Rear Filter	D932	118.0	117.5	117.5	✓		
	Probe	OES 5	113569.9	113571.9	113571.3	113571.5 ✓		
	O-Ring Set	R901	3385.3	3386.3	3386.1	✓		
B	Front Filter	D933	119.3	129.4	129.4	✓		
	Rear Filter	D934	117.9	117.4	117.3	✓		
	Probe	9	115695.7	115696.5	115696.5	✓		
	O-Ring Set	R902	3299.5	3301.4	3301.4	✓		
BG	Filter	D935	119.0	119.0	119.0	✓		

Technician Signature: [signature] Date: 1/9/20

OMNI-Test Laboratories, Inc.

ASTM E2618 Wood Heater Run Sheets

Client: Central Boiler Project Number: 0117WB040E Run Number: 2
Model: Edge 360 Tracking Number: 2399 Date: 12/10/19
Test Crew: B Davis
OMNI Equipment ID numbers: 637, 592, 283A

ASTM E2515 Lab Sheet

Assembled By: B Davis

Date/Time in Dessicator: 12/11/19

	Weighing #1	Weighing #2	Weighing #3	Weighing #4	Weighing #5
Date/Time:	12/13/19 0830	12/17/19 1046	12/19/19 0830		
R/H %:	22.1	13.5	15.1		
Temp:	69.4	72.5	71.9		
200 mg Audit:	199.9	199.9	200.0		
2 g Audit:	2000.3	2000.3	2000.3		
100 g Audit:	99997.8	99997.9	99998.0		
Initials:	BL	BL	BL		

Train	Element	ID #	Tare (mg)	Weight (mg)	Weight (mg)	Weight (mg)	Weight (mg)	Weight (mg)
A (First Hour)	Front Filter	D936	118.1	118.5	118.3	✓		
	Rear Filter							
	Probe							
	O-Ring Set							
A (Remainder)	Front Filter	D937	118.1	144.3	143.6	143.6	✓	
	Rear Filter	D938	117.8	118.2	117.8	117.9	✓	
	Probe	11	114163	114190.4	114190.2	✓		
	O-Ring Set	R903	4119.4	4121.6	4121.4	✓		
B	Front Filter	D939	118.7	145.1	144.2	144.4	✓	
	Rear Filter	D940	117.5	116.9	116.8	✓		
	Probe	12	114283.7	114288.1	114287.8	114287.9	✓	
	O-Ring Set	R904	3421.0	3423.6	3423.2	3423.3	✓	
BG	Filter	D941	118.8	118.9	118.7	✓		

Technician Signature: [signature] Date: 1/9/20

ED_005996_00000511-00018

OMNI-Test Laboratories, Inc.

ASTM E2618 Wood Heater Run Sheets

Client: Central Boiler Project Number: 0117WB040E Run Number: 3
Model: Edge 360 Tracking Number: 2399 Date: 12/4/19
Test Crew: B Davis
OMNI Equipment ID numbers:

ASTM E2515 Lab Sheet

Assembled By: B Davis

Date/Time in Dessicator: 12/12/19

	Weighing #1	Weighing #2	Weighing #3	Weighing #4	Weighing #5
Date/Time:	12/13/19 0830	12/17/19 1046	12/19/19 0830		
R/H %:	22.1	13.5	15.1		
Temp:	68.4	72.8	71.9		
200 mg Audit:	199.9	199.9	200.0		
2 g Audit:	2000.3	2000.3	2000.3		
100 g Audit:	99997.8	99997.9	99997.0		
Initials:	BL	BL	BL		

Train	Element	ID #	Tare (mg)	Weight (mg)	Weight (mg)	Weight (mg)	Weight (mg)	Weight (mg)
A (First Hour)	Front Filter	D942	118.9	119.2	119.1	✓		
	Rear Filter		1					
	Probe							
	O-Ring Set							
A (Remainder)	Front Filter	D943	118.1	134.8	133.9	134.0	✓	
	Rear Filter	D944	117.5	117.3	117.3	✓		
	Probe	13	114321.4	114323.6	114323.5	✓		
	O-Ring Set	R905	4125.1	4127.3	4126.3	4126.2	✓	
B	Front Filter	D945	116.9	133.5	132.4	132.4	✓	
	Rear Filter	D946	116.9	116.9	116.9	✓		
	Probe	14	114547.8	114550.5	114549.8	114550.0	✓	
	O-Ring Set	R906	3362.2	3365.4	3363.9	3364.1	✓	
BG	Filter	D947	116.0	116.3	116.4	✓		

Technician Signature: [signature] Date: 1/9/20

OMNI-Test Laboratories, Inc.

ASTM E2618 Wood Heater Run Sheets

Client: Central Boiler Project Number: 0117WB040E Run Number: 4
Model: Edge 360 Tracking Number: 2399 Date: 12/16/19
Test Crew: D Davis
OMNI Equipment ID numbers:

ASTM E2515 Lab Sheet

Assembled By: B. Davis

Date/Time in Dessicator: 12/16/19 0840

	Weighing #1	Weighing #2	Weighing #3	Weighing #4	Weighing #5
Date/Time:	12/19/19 0840		1/2/20 0830	1/3/20 0820	
R/H %:	15.1	16.3	20.8	18.8	
Temp:	71.9	71.0	69.0	72.1	
200 mg Audit:	~~99998.1~~ 16	199.9	200.0	200.0	
2 g Audit:	~~199.9~~	~~199.9~~	2000.3	2000.3	
100 g Audit:	99998.1	99998.1	99998.0	99997.9	
Initials:	BL	K	BL	BL	

Train	Element	ID #	Tare (mg)	Weight (mg)	Weight (mg)	Weight (mg)	Weight (mg)	Weight (mg)
A (First Hour)	Front Filter	D948	117.2	116.9	116.9			
	Rear Filter							
	Probe							
	O-Ring Set							
A (Remainder)	Front Filter	D949	117.7	133.7	133.6			
	Rear Filter	D950	117.4	116.3	116.4			
	Probe	16	114266.3	114267.8	114267.7			
	O-Ring Set	R907	3297.0	3300.3	3299.7	3299.6		
B	Front Filter	D951	119.1	134.5	135.2	134.2	134.4	
	Rear Filter	D952	117.7	116.7	116.8			
	Probe	17	114562.0	114563.4	114563.2			
	O-Ring Set	R908	3393.8	3397.1	3396.4	3396.2		
BG	Filter	D953	117.9	118.1	118.0			

Technician Signature: Date:

ED_005996_00000511-00020

OMNI-Test Laboratories, Inc.

ASTM E2618 Wood Heater Run Sheets

Client: Central Boiler Project Number: 0117WB040E Run Number: 5
Model: Edge 360 Tracking Number: 2399 Date: 12/12/19
Test Crew: B Daus
OMNI Equipment ID numbers:

ASTM E2515 Lab Sheet

Assembled By: B Daus

Date/Time in Dessicator: 12/20/19

	Weighing #1	Weighing #2	Weighing #3	Weighing #4	Weighing #5
Date/Time:	12/23/19	1/2/20 0930	1/3/20 0920		
R/H %:	16.3	20.8	17.8		
Temp:	71.0	69.0	72.1		
200 mg Audit:	199.9	200.0	200.0		
2 g Audit:	~~199.9~~	2000.3	2000.3		
100 g Audit:	99998.1	99998.0	99997.9		
Initials:	K	AL	BG		

Train	Element	ID #	Tare (mg)	Weight (mg)	Weight (mg)	Weight (mg)	Weight (mg)	Weight (mg)
A (First Hour)	Front Filter	D954	118.8	118.9	118.8	✓		
	Rear Filter							
	Probe							
	O-Ring Set							
A (Remainder)	Front Filter	D955	117.6	135.9	135.2	135.2	✓	
	Rear Filter	D956	119.0	119.2	118.9	118.9	✓	
	Probe	67	117757.9	117759.5	117759.2	117759.3	✓	
	O-Ring Set	R909	3371.5 ~~118.7~~ AL	3373.3	3373.2	✓		
B	Front Filter	D957	118.7	134.5	134.1	134.2	✓	
	Rear Filter	D958	118.4	114.3	113.9	114.0	✓	
	Probe	68	116804.0	116805.2	116805.5	116805.4	✓	
	O-Ring Set	R910	4107.7	4115.0	4114.9	✓		
BG	Filter	D959	116.7	117.2	117.0	✓		

Technician Signature: B Daus Date: 1/9/20

ASTM E2618 Wood Heater Run Sheets

Client: Central Boiler Project Number: 0117WB040E Run Number: 6
Model: Edge 360 Tracking Number: 2399 Date: 12/21/19
Test Crew: BDAVS
OMNI Equipment ID numbers:

ASTM E2515 Lab Sheet

Assembled By: B Davis

Date/Time in Dessicator: 12/21/19 2305

	Weighing #1	Weighing #2	Weighing #3	Weighing #4	Weighing #5
Date/Time:	12/23/19	1/2/20 0830	1/3/20 0820		
R/H %:	16.3	20.8	18.8		
Temp:	71.0	69.0	72.1		
200 mg Audit:	199.9	200.0	200.0		
2 g Audit:	~~199.9~~	2000.3	2000.3		
100 g Audit:	99998.1	99998.0	99997.9		
Initials:	JK	JK	JC		

Train	Element	ID #	Tare (mg)	Weight (mg)	Weight (mg)	Weight (mg)	Weight (mg)	Weight (mg)
A (First Hour)	Front Filter	D 960	118.3	118.4	118.3	✓		
	Rear Filter							
	Probe							
	O-Ring Set							
A (Remai-nder)	Front Filter	D961	119.0	131.8	131.5	131.3	✓	
	Rear Filter	D962	119.9	119.9	119.8	✓		
	Probe	2	115016.7	115017.9	115018.0	✓		
	O-Ring Set	R911	4138.4	4140.4	4140.3	✓		
B	Front Filter	D963	120.1	132.7	132.4	132.2	✓	
	Rear Filter	D964	119.3	119.1	118.8	118.8	✓	
	Probe	3	116012.2	116012.9	116013.0	✓		
	O-Ring Set	R912	3344.5	3346.3	3346.2	✓		
BG	Filter	D945	120.0	120.1	120.1	✓		

Technician Signature: [signature] Date: 1/9/20

Tare Sheet: (check one) **Probes**_____ **47mm Filters** ✓ **100mm Filters**_____ **O-Ring Pair**_____

Prepared By: D Davis Balance ID #: OMNI-00637 Thermohygrometer ID #: OMNI-00592 Audit Weight ID #/Mass: OMNI-00283A / 200 mg

Placed in Dessicator: Date: 9/23/19 Time: 0825	Date: 9/24/19 Time: 0900 RH %: 17.9 T (°F): 75.5 Audit: 200.1	Date: 9/25/19 Time: 0955 RH %: 21.2 T (°F): 73.4 Audit: 200.0	Date: 9/26/19 Time: 10:13 RH %: 25.0 T (°F): 73.9 Audit: 200.1	Date: Time: RH %: T (°F): Audit:	Date Used	Project Number	Run No.
ID #							
D925	118.4	118.3	✓				
D926	118.1	118.0	✓				
D927	117.9	117.6	117.8 ✓				
D928	117.7	117.7	✓				
D929	117.6	117.6	✓				
D930	117.8	117.9	✓				
D931	119.1	118.9	✓				
D932	118.1	118.0	✓				
D933	119.2	119.3	✓				
D934	117.8	118.9	✓				
D935	118.9	119.0	✓				
D936	118.1	118.1	✓		12/10/19		2
D937	118.2	118.1	✓				
D938	117.8	117.8	✓				
D939	118.9	118.7	✓				
D940	117.5	117.5	✓				
D941	118.9	118.8	✓				
D942	118.7	118.9	✓		12/11/19		3
D943	118.1	118.1	✓				
D944	117.5	117.5	✓ ~~117.4~~	✓			
	Initials: DR	Initials: DR	Initials: DR	Initials:			

Final Technician Signature: D Davis Date: 11/19/19 Evaluator signature: K. J. Morgan

Control No. P-SFDP-0002.xls, Effective date: 2/1/2017

Tare Sheet: (check one) **Probes**_____ **47mm Filters** ✓ **100mm Filters**_____ **O-Ring Pair**_____

Prepared By: B Davis Balance ID #: Omni-00637 Thermohygrometer ID #: Omni-00592 Audit Weight ID #/Mass: Omni-00283A / 200 mg

Placed in Dessicator: Date: 12/4/19 Time: 10:45	Date: 12/5/19 Time: 1055 RH %: 92 T (°F): 71.2 Audit: 200.1	Date: 12/6/19 Time: 0827 RH %: 12.2 T (°F): 71.7 Audit: 200.0	Date: Time: RH %: T (°F): Audit:	Date: Time: RH %: T (°F): Audit:	Date Used	Project Number	Run No.
ID #							
D945	116.9	116.9	✓		12/11/19	0117W8040E	3
D946	117.0	116.9	✓		↓		↓
D947	116.0	116.0	✓		↓		↓
D948	117.4	117.2	✓		12/16		4
D949	117.8	117.7	✓		↓		↓
D950	117.5	117.4	✓		↓		↓
D951	119.3	119.1	✓		↓		↓
D952	117.8	117.7	✓		↓		↓
D953	118.0	117.9	✓		↓		↓
D954	118.9	118.8	✓		12/18/19		5
D955	117.7	117.6	✓		↓		↓
D956	119.1	119.0	✓		↓		↓
D957	118.9	118.7	✓		↓		↓
D958	118.5	118.4	✓		↓		↓
D959	116.9	116.7	✓		↓		↓
D960	118.5	118.3	✓				6
D961	119.2	119.0	✓				↓
D962	120.0	119.9	✓				↓
D963	120.0	120.1	✓				↓
D964	119.2	119.3	✓				↓
	Initials: DD	Initials: DD	Initials:	Initials:			

Final Technician Signature: [signature] Date: 12/6/19 Evaluator signature:_____

Control No. P-SFDP-0002.xls, Effective date: 2/1/2017

Tare Sheet: (check one) **Probes**_____ **47mm Filters** ✓ **100mm Filters**_____ **O-Ring Pair**_____

Prepared By: B Davis Balance ID #: omni-00637 Thermohygrometer ID #: omni-00392 Audit Weight ID #/Mass: omni-00283A / 200 mg

Placed in Dessicator: Date: 9/17/19 Time: 1320	Date: 12/19/19 Time: 0845 RH %: 15.1 T (°F): 71.9	Date: 12/20/19 Time: 0745 RH %: 19.4 T (°F): 73.0	Date: Time: RH %: T (°F):	Date: Time: RH %: T (°F):	Date Used	Project Number	Run No.
ID #	Audit: 200.0	Audit: 200.1	Audit:	Audit:			
D965	119.9	120.0	✓			0117WB040E	6
D966	119.8	120.0	✓				
D967	119.8	119.7	✓				
D968	119.1	119.1	✓				
D969	119.3	119.3	✓				
D970	119.1	119.0	✓				
D971	119.5	119.5	✓				
D972	119.2	119.3	✓				
D973	120.4	120.3	✓				
D974	118.7	118.6	✓				
D975	120.0	120.0	✓				
D976	119.7	119.6	✓				
D977	120.4	120.4	✓				
D978	119.7	119.7	✓				
D979	120.3	120.5	✓				
D980	118.9	119.1	✓				
D981	119.8	120.0	✓				
D982	119.4	119.6	✓				
D983	120.0	119.9	✓				
D984	118.9	119.0	✓				
	Initials: BL	Initials: BL	Initials:	Initials:			

Final Technician Signature: [signature] 12/20/19 Date: 12/20/19 Evaluator signature:_____

Control No. P-SFDP-0002.xls, Effective date: 2/1/2017

Tare Sheet: (check one) **Probes** ✓ **47mm Filters**____ **100mm Filters**____ **O-Ring Pair**____

Prepared By: B Davis Balance ID #: OMNI-00637 Thermohygrometer ID #: OMNI-00592 Audit Weight ID #/Mass: OMNI-00283A 1 100g

Placed in Dessicator: Date: 9/24/19 Time: 0815	Date: 12-4-19 Time: 0952 RH %: 14.4 T (°F): 72.8 Audit: 99998.0	Date: 12/5/19 Time: 0949 RH %: 10.2 T (°F): 72.1 Audit: 99998.0	Date: 12/6/19 Time: 0821 RH %: 12.2 T (°F): 71.7 Audit: 99998.1	Date: 12/9/19 Time: 0955 RH %: 12.3 T (°F): 71.7 Audit: 99998.0	Date Used	Project Number	Run No.
ID #							
OES5	113570.3	113570.0	113569.9		12/9/19	0117WB040E	1
9	115695.8	115695.5	115695.7		↓		↓
11	114186.5	114186.2	114186.3		12/10/19		2
12	114283.8	114283.5	114283.7		↓		↓
13	114321.5	114321.4			12/11/19		3
14	114548.0	114547.7	114548.0	114547.8	↓		↓
16	114266.4	114266.1	114266.3		12/16/19		4
17	114562.0	114562.0			↓		↓
67	117758.1	117757.7	117758.0	117757.9			5
68	116804.2	116803.8	116804.0				↓
	Initials: BD	Initials: BD	Initials: BC	Initials: BC			

Final Technician Signature: B D Date: 12/9/19 Evaluator signature:_____

Control No. P-SFDP-0002.xls, Effective date: 2/1/2017

Tare Sheet: (check one) **Probes** ✓ **47mm Filters**____ **100mm Filters**____ **O-Ring Pair**____

Prepared By: B Davis Balance ID #: omni-00637 Thermohygrometer ID #: omni-00592 Audit Weight ID #/Mass: omni-00283A / 100g

Placed in Dessicator: Date: 12/19/19 Time: 0820	Date: 12/19/19 Time: 0900 RH %: 15.1 T (°F): 71.9 Audit: 99998.1	Date: 12/20/19 Time: 0745 RH %: 19.4 T (°F): 73.0 Audit: 99998.0	Date: 1/2/20 Time: 0830 RH %: 20.5 T (°F): 69.0 Audit: 99998.0	Date: 1/3/20 Time: 0820 RH %: 18.0 T (°F): 72.1 Audit: 99997.9	Date Used	Project Number	Run No.
ID #							
2	115016.9	115016.7 ✓				0117WB040E	6
3	116012.2	116012.2 ✓					↓
OES 3	114769.1	114769.7	114768.8	114769.6	Not used		
4	114858.3	114859.1	114857.9	114858.6	Not used		
OES 4	114148.4	114148.6 ✓					
6	115349.6	115349.8 ✓			1/8/20		
OES 6	113710.7	113711.0	113710.3	113711.1	Not used		
7	114981.4	114982.2	114981.0	114981.6	Not used		
8	115598.2	115598.8	115598.0	115598.6	Not used		
15	114341.3	114341.5 ✓					
18	114402.5	114402.7 ✓					
20	114253.8	114254.3	114253.7	114254.2	Not used		
	Initials: BR	Initials: BR	Initials: BR	Initials:			

Final Technician Signature: [signature] Date: 1/3/20 Evaluator signature:_____

Tare Sheet: (check one) **Probes**_____ **47mm Filters**_____ **100mm Filters**_____ **O-Ring Pair** ✓

Prepared By: B Davis Balance ID #: OMNI-00637 Thermohygrometer ID #: OMNI-00592 Audit Weight ID #/Mass: OMNI-00283A / 5g

Placed in Dessicator: Date: 9/20/19 Time: 0815	Date: 12/4/19 Time: 10:00 RH %: 5.7 T (°F): 71.2	Date: 12/5/19 Time: 0944 RH %: 11.8 T (°F): 71.9	Date: 12-6-19 Time: 0902 RH %: 12.2 T (°F): 71.7	Date: Time: RH %: T (°F):	Date Used	Project Number	Run No.
ID #	Audit: 5000.1	Audit: 5000.0	Audit: 4999.9	Audit:			
R901	3385.3	3385.3 ✓			12/9/19	0117WB040E	1
R902	3299.5	3299.5 ✓			↓	↓	↓
R903	4119.3	4119.6	4119.4 ✓		12/10/19		2
R904	3421.0	3421.0 ✓			↓		↓
R905	4124.9	4125.1 ✓			12/11/19		3
R906	3362.0	3362.2 ✓			↓		↓
R907	3297.1	3297.0 ✓			12/16/19		4
R908	3393.8	3393.8 ✓			↓		↓
R909	3371.2	3371.5	3371.5 ✓		12/18/19		5
R910	4107.5	4107.7 ✓			↓	↓	↓
	Initials: BR	Initials: BR	Initials: BR	Initials:			

Final Technician Signature: BR Date: 12/6/19 Evaluator signature:_____

Control No. P-SFDP-0002.xls, Effective date: 2/1/2017

Tare Sheet: (check one) **Probes**_____ **47mm Filters**_____ **100mm Filters**_____ **O-Ring Pair**___

Prepared By: B Davis Balance ID #: omni-00637 Thermohygrometer ID #: omni-00592 Audit Weight ID #/Mass: omni-00583A / 5g

Placed in Dessicator: Date: 12/19/19 Time: 0800	Date: 12/19/19 Time: 0745 RH %: 13.1 T (°F): 71.9 Audit: 4999.9	Date: 12/20/19 Time: 0745 RH %: 19.4 T (°F): 73.0 Audit: 5000.0	Date: 1/2/20 0830 Time: 0830 RH %: 20.8 T (°F): 69 Audit: 4999.9	Date: 1/6/20 Time: 0835 RH %: 11.3 T (°F): 72.6 Audit: 5000.0	Date Used	Project Number	Run No.
ID #							
R911	4138.5	4138.4	–			0117WB040E	6
R912	3344.4	3344.5	–				↓
R913	4145.4	4145.5	–				
R914	3490.5	3490.5	–				
R915	3537.3	3537.3	–				
R916	3321.3	3321.5	–				
R917	3286.3	3286.4	–				
R918	3490.7	3490.7	–				
R919	3530.9	3531.1	–				
R920	3321.6	3321.8	–				
R921	3291.7	3292.0	3291.6	3291.7	–		
R922	3344.3	3344.5	–				
R923	3398.7	3398.9	–				
R924	4146.7	4146.8	–				
R925	3347.4	3347.8					
R926	3350.8	3350.8	–				
	Initials: BA	Initials: BA	Initials: BA	Initials: BA			

Final Technician Signature: B Davis Date: 1/6/20 Evaluator signature:_____

Control No. P-SFDP-0002.xls, Effective date: 2/1/2017

Calibrations

ID #	Equipment Name/Description	Attachment Type
637	Balance, Analytical - Mettler Instrument	Calibration Certificate
283A	Weight Standard set	Calibration Certificate
132	Weight Standard, 10 lb. - WeightMaker	Calibration Log
650	Barometer	Calibration Certificate
296-T59	DeWalt 16' Tape Measure	Calibration Log
340	Delmhorst Wood Moisture Meter	None*
592	Hygrometer/Thermometer, Digital - Omega	Calibration Certificate
353	Scale, Platform – Fuel Scale	Calibration Log
356	Scale, Pro-Dec (5000 lbs.) - Avery Weigh-Tronix	Calibration Certificate
410	Microtector	Calibration Certificate
413	Dry Gas Meter	Calibration Log
419	Infrared gas analyzer	Manual Cover
325	Sampling Box, Automated Emissions - Apex XC-60	Calibration Log
326	Sampling Box, Automated Emissions - Apex XC-60	Calibration Log
431	Wood Moisture Meter Calibrator	Calibration Log
513	Omega Low Flow Magmeter	Calibration Log
559	Dwyer Vaneometer	Manual

Certificate of Calibration

Certificate Number: **704810**

JJ Calibrations, Inc.
7007 SE Lake Rd
Portland, OR 97267-2105
Phone 503.786.3005
FAX 503.786.2994

OnSite

ACCREDITED
0723.01
Calibration

Omni-Test Laboratories
13327 NE Airport Way
Portland, OR 97230

PO: **190241**
Order Date: 07/10/2019
Authorized By: **N/A**

Property #: OMNI-00637
User: N/A
Department: N/A
Make: Mettler Toledo
Model: MS104TS/00
Serial #: B729400181
Description: Analytical Scale, 120g
Procedure: DCN 500887
Accuracy: ±0.0005g

Calibrated on: 07/10/2019
*Recommended Due: 01/10/2020
Environment: 21 °C 39 % RH
* As Received: Within Tolerance
* As Returned: Within Tolerance
Action Taken: Calibrated
Technician: 111

Remarks: * Many factors may cause the unit to drift out of calibration before the recommended due date. Any reported error is the absolute value between the reference and the unit. Uncertainties include the effects of the unit.

Standards Used

Std ID	Manufacturer	Model	Nomenclature	Due Date	Trace ID
723A	Rice Lake	Img-200g (Class 0)	Mass Set,	05/22/2020	694890

Measurement Data

Parameter / Measurement Description	Range Unit	Reference	Min	Max	*Error	UUT	Uncertainty Accredited = ✓
Before/After							
Force							
	g	10.00000	9.9995	10.0005	0.0000	10.0000 g	1.2E-05 ✓
	g	30.00000	29.9995	30.0005	0.0000	30.0000 g	1.3E-05 ✓
	g	60.00000	59.9995	60.0005	0.0001	60.0001 g	1.8E-05 ✓
	g	90.00000	89.9995	90.0005	0.0000	90.0000 g	2.1E-05 ✓
	g	120.00000	119.9995	120.0005	0.0001	119.9999 g	2.9E-05 ✓

JJ Calibrations, Inc. certifies that this instrument has been calibrated in accordance with the JJ Calibrations Quality Assurance Manual with the stated procedure using standards that are traceable to the National Institute of Standards and Technology (NIST), or other National Measurement Institutes (NMI's), or by using natural physical constants, intrinsic standards or ratio calibration techniques. The quality system and this certificate are in compliance with ANSI/NCSL Z540-1-1994, ISO/IEC 17025-2005, ISO 10012-1, the ISO 9000 family and QS 9000. The expanded uncertainties of measurements for this calibration are based upon 95% (2 sigma) confidence limits. Unless otherwise stated, a test accuracy ratio (TAR) of 4:1, if achievable, is maintained. The results reported herein apply only to the calibration of the item described above. This report may not be reproduced, except in full, without prior written consent of JJ Calibrations, Inc.
JJ Calibrations, Inc. quality system has been assessed and accredited to ISO/IEC 17025:2005.

Reviewer

3 Issued 07/12/2019 Rev # 15

Inspector

Certificate of Calibration

Certificate Number: **685888**

JJ Calibrations, Inc.
7007 SE Lake Rd
Portland, OR 97267-2105
Phone 503.786.3005
FAX 503.786.2994

Omni-Test Laboratories
13327 NE Airport Way
Portland, OR 97230

ACCREDITED 0723.01 Calibration

PO: **180188**
Order Date: 10/09/2018
Authorized By: **N/A**

Property #: OMNI-00283A
User: N/A
Department: N/A
Make: Troemner Inc
Model: 1mg-100g (Class F)
Serial #: 47883
Description: Mass Set, 21pc
Procedure: DCN 500901
Accuracy: Class F

Calibrated on: 10/26/2018
*Recommended Due: 10/26/2023
Environment: 20 °C 57 % RH
* As Received: Within Tolerance
* As Returned: Within Tolerance
Action Taken: Calibrated
Technician: **139**

Remarks: * Many factors may cause the unit to drift out of calibration before the recommended due date. Any reported error is the absolute value between the reference and the unit. Uncertainties include the effects of the unit.

This set meets Class F specifications.
Received and returned eight (8) masses in a black case secured by a rubber band.

Standards Used

Std ID	Manufacturer	Model	Nomenclature	Due Date	Trace ID
723A	Rice Lake	1mg-200g (Class 0)	Mass Set,	03/23/2019	668240
800A	Sartorius	MSA225W100DI	Analytical Balance	12/11/2018	663857

Measurement Data

Parameter Measurement Description	Range Unit	Reference	Min	Max	*Error	UUT	Uncertainty Accredited = ✓
Before/After							
Mass							
Dot	200 mg	200.00030	199.4603	200.5403	0.0500	200.0503 mg	6.2E-01 ✓
	1 g	1.00000880	0.9991088	1.0009088	0.0000000	1.0000088 g	1E-03 ✓
	2 g	2.00001470	1.9989147	2.0011147	0.0003250	2.0003397 g	1.3E-03 ✓
	5 g	5.00000840	4.9985084	5.0015084	0.0000400	4.9999684 g	1.7E-03 ✓
	10 g	10.0000100	9.998010	10.002010	0.000245	9.999765 g	2.3E-03 ✓
Dot	20 g	20.0000140	19.996014	20.004014	0.000990	20.001004 g	4.6E-03 ✓
	50 g	49.9999660	49.989966	50.009966	0.000595	49.999371 g	1.1E-02 ✓
	100 g	100.000000	99.98000	100.02000	0.00194	99.99806 g	2.3E-02 ✓

JJ Calibrations, Inc. certifies that this instrument has been calibrated in accordance with the JJ Calibrations Quality Assurance Manual with the stated procedure using standards that are traceable to the National Institute of Standards and Technology (NIST), or other National Measurement Institutes (NMI's), or by using natural physical constants, intrinsic standards or ratio calibration techniques. The quality system and this certificate are in compliance with ANSI/NCSL Z540-1-1994, ISO/IEC 17025-2005, ISO 10012-1, the ISO 9000 family and QS 9000. The expanded uncertainties of measurements for this calibration are based upon 95% (2 sigma) confidence limits. Unless otherwise stated, a test accuracy ratio (TAR) of 4:1, if achievable, is maintained. The results reported herein apply only to the calibration of the item described above. This report may not be reproduced, except in full, without prior written consent of JJ Calibrations, Inc.
JJ Calibrations, Inc. quality system has been assessed and accredited to ISO/IEC 17025:2005.

Reviewer

3 Issued 10/29/2018 Rev # 15

Inspector

SCALE WEIGHT CALIBRATION DATA SHEET

Weight to be calibrated: 10 pounds

ID Number: OMNI-00132

Standard Calibration Weight: 10 pounds

ID Number: OMNI-00255

Scale Used: MTW-150K

ID Number: OMNI-00353

Date: 2/23/2018 By: B. Davis

Standard Weight (A) (Lb.)	Weight Verified (B) (Lb.)	Difference (A - B)	% Error
10.0	10.0	0.0	0

*Acceptable tolerance is 1%.

This calibration is traceable to NIST using calibrated standard weights.

Technician signature: [signature] Date: 2/23/18

Certificate of Calibration

Certificate Number: **698278**

JJ Calibrations, Inc.
7007 SE Lake Rd
Portland, OR 97267-2105
Phone 503.786.3005
FAX 503.786.2994

Omni-Test Laboratories
13327 NE Airport Way
Portland, OR 97230

ACCREDITED
0723.01
Calibration

PO: **190231**
Order Date: 04/04/2019
Authorized By: **N/A**

Property #: OMNI-00650
User: N/A
Department: N/A
Make: Control Company
Model: 6530
Serial #: 181062211
Description: Thermohygrometer / Barometer
Procedure: 403406
Accuracy: ±3%RH, ±.4°C(0.8°F), ±4mbar(0.12inHg)

Calibrated on: 04/18/2019
*Recommended Due: 04/18/2020
Environment: 22 °C 53 % RH
* As Received: Within Tolerance
* As Returned: Within Tolerance
Action Taken: Calibrated
Technician: **146**

Remarks: * Many factors may cause the unit to drift out of calibration before the recommended due date. Any reported error is the absolute value between the reference and the unit. Uncertainties include the effects of the unit.

Standards Used

Std ID	Manufacturer	Model	Nomenclature	Due Date	Trace ID
847A	Fluke	RPM4	Reference Pressure Monitor	11/21/2019	688957
644A	Thunder Scientific	1200	Two Pressure Humidity Generator	07/30/2019	674006

Measurement Data

Parameter / Measurement Description	Range Unit	Reference	Min	Max	*Error	UUT	Uncertainty
Before/After							Accredited = ✓
Humidity							
	%	13.0	10	16	1	14 %	5.8E-01 ✓
	%	50.0	47	53	2	48 %	5.8E-01 ✓
	%	80.0	77	83	3	77 %	5.8E-01 ✓
Temperature							
	°C	20.00	19.6	20.4	0.4	19.6 °C	8.1E-02 ✓
	°C	35.00	34.6	35.4	0.4	34.6 °C	8.1E-02 ✓
	°C	50.00	49.6	50.4	0.2	49.8 °C	8.1E-02 ✓
Barometer							
	29 inHg	29.6210	29.501	29.741	0.009	29.630 inHg	8.1E-02 ✓

JJ Calibrations, Inc. certifies that this instrument has been calibrated in accordance with the JJ Calibrations Quality Assurance Manual with the stated procedure using standards that are traceable to the National Institute of Standards and Technology (NIST), or other National Measurement Institutes (NMI's), or by using natural physical constants, intrinsic standards or ratio calibration techniques. The quality system and this certificate are in compliance with ANSI/NCSL Z540-1-1994, ISO/IEC 17025-2005, ISO 10012-1, the ISO 9000 family and QS 9000. The expanded uncertainties of measurements for this calibration are based upon 95% (2 sigma) confidence limits. Unless otherwise stated, a test accuracy ratio (TAR) of 4:1, if achievable, is maintained. The results reported herein apply only to the calibration of the item described above. This report may not be reproduced, except in full, without prior written consent of JJ Calibrations, Inc.
JJ Calibrations, Inc. quality system has been assessed and accredited to ISO/IEC 17025:2005.

Reviewer

3 Issued 04/19/2019 Rev # 15

Inspector

OMNI Environmental Services, Inc.
OMNI-Test Laboratories, Inc.

Tape Measure Calibration Log

Place the calibrated 12" ruler under the tape measure and verify that each ½" (i.e. 1.5", 2", 2.5") between 0 and 36" is within 1/8".

Calibrated using OMNI-00281

Tape Measure Number	Description	Cal Dates				Technician Initials			
OMNI-00296-T55	Dewalt 16' Tape Measure	12/12/16	12/6/17	1/2/19		BR	BR	BR	
OMNI-00296-T56	Dewalt 25' Tape Measure	12/12/16				BR			
OMNI-00296-T59	Dewalt 25' Tape Measures	12/12/16				BR			
OMNI-00296-T58	Dewalt 25' Tape measure	3/9/17	4/3/18			BR	BR		
OMNI-00296-T40	Stanley FatMax Tape measurer 16'	11/17/17	1/2/19			NTS	BR		
OMNI-00296-T31	Stanley Powerlock Tape Measurer	11/22/17	1/2/19			NTS	BR		
OMNI-00296-T59	DeWalt 25' tape Measure	12/06/17	4/3/19			NTS	BR		
OMNI-00296-T54	DeWalt 25' tape Measure	12/06/17				NTS			
OMNI-00296-T56	DeWalt 25' tape Measure	12/06/17				NTS			
OMNI-00296-T55	DeWalt 25' tape Measure	12/06/17	4/3/18	4/3/19		NTS	BR	BR	
OMNI-00296-T47	Removed From Service, Numbers were wearing off.	1/2/19				BR			

VWR Temperature Hygrometer Calibration Procedure and Data Sheet

Frequency: Every Two Years

Step 1: Locate NIST traceable standard.

Step 2: Place unit to be calibrated, tracking No. OMNI-00592, inside OMNI desiccate box on the same shelf with the NIST traceable standard.

Step 3: After a period of not less than four hours record the temperature and humidity of both units in the spaces provide below.

Step 4: If the unit to be calibrated matches the NIST standard within ± 4%, it is acceptable. If not, the unit needs to be sent to a repair company or replaced.

Verification Data:

Date: ~~1/29/19~~ 1/29/19 pa Technician: B Davis

Time in desiccate: 0840 Recording time: 1415

NIST Standard Temperature: 70.2 °F NIST Standard Humidity: 14.6

Test Unit Temperature Reading: 69.9 °F Test Unit Humidity Reading: 12.1

Test unit OMNI- 00592 is X or was not ___ within acceptable limits.

Technician Signature: [signature]

Comments: A difference of 2.5% was found, with a full scale of 90% on the Instrument this gives a 2.77% deviation.

Calibration sheet For MTW-150K S/N MKW04072 (OMNI-00353)

Calibration Interval: 12 months

Parameter	Date	Omni reference weights used	Weight	Scale readout	Compliance	
Mass in Lbs.	12-11-08	00132	10 lb	10.0 lbs	✓	
	12-11-08	00132 255	20 lb	20.0 lbs	✓	
	12-11-08	00132, 255, 274	30 lb	30.0 lbs	✓	
	3/9/11	00132	10LBS	10LBS	X	SW
	3/9/11	132/255	10LBSx2	20LB	X	SW
	3/9/11	132/255/274	10LBSx3	30LB	X	SW
	8/10/2012	00132	10 lb	10.0 lb	✓	J. Clark
	8/10/2012	132, 255	20 lb	20.0 lb	✓	J. Clark
	8/10/2012	132, 255, 274	30 lb	30.0 lb	✓	J. Clark
	7/19/2013	00132	10 lb	10.0 lb	✓	J. Clark
	7/19/2013	132, 255	20 lb	20.0 lb	✓	J. Clark
	7/19/2013	132, 255, 274	30 lb	30.0 lb	✓	J. Clark
	7/8 9/2014	- 00132	10 lb	10.0 lb	✓	J. Clark
	7/9/2014	- 00132, - 00255	20 lb	20.0 lb	✓	J. Clark
	7/9/2014	-00132, -00255, -00274	30 lb	30.0 lb	✓	J. Clark
	7/13/2015	- 00132	10 lb	10.0 lb	✓	J. Clark
	7/13/2015	-00132, -00255	20 lb	20.0 lb	✓	↓
	7/13/2015	-00132, -00255, -00274	30 lb	30.0 lb	✓	↓
	7/26/2016	omni - 00283B	1 kg	2.2 lb	✓	B Davis
	7/26/2016	omni - 00274	10 lb	12.2 lb	✓	B Davis
	7/26/2016	omni - 00255	10 lb	22.2 lb	✓	B Davis
	8/14/17	omni - 00283B	1 kg	2.2 lbs	—	BD
	8/14/17	omni - 00274	+ 10.0	~~10.0~~ 12.2	✓	BD
	8/14/17	omni - 00255	+ 10.0	22.2	✓	BD
	8/31/18	Omni - 00283B	1 kg	2.2	—	BD
	8/31/18	omni - 00274	+ 10.0	12.2	—	BD
	8/31/18	omni - 00255	+ 10.0	22.2	—	BD
	10/24/19	omni - 00283B	1 kg	2.2 lbs	—	BD
	10/24/19	omni - 00274	+ 10.0	12.2 lbs	—	BD
	10/24/19	omni - 00255	+ 10.0	22.2 lbs	—	BD

QUALITY CONTROL SERVICES

Established 1974

LABORATORY EQUIPMENT • SALES • SERVICE • CALIBRATION • REPAIRS
2340 SE 11TH Ave. Portland, Oregon 97214 • Box 14831 Portland, Oregon 97293
(503) 236-2712 • FAX (503) 235-2535 • www.qc-services.com

A2LA ACCREDITED
CERTIFICATE #1550.01

OMNI-Test Laboratories, Inc.
13327 NE Airport Way
Portland, OR 97230

Report Number: OMNE03069076191031

A2LA ACCREDITED
CERTIFICATE OF CALIBRATION WITH DATA

INSTRUMENT INFORMATION

Item	Make	Model	Serial Number	Customer ID	Location
Scale	Weigh-Tronix	WI-125x5000x0.5lt	069076	356	Lab
Units	**Readability**	**SOP**	**Cal Date**	**Last Cal Date**	**Cal Due Date**
lbs	0.5	QC033	10/31/19	10/2/18	10/2020

FUNCTIONAL CHECKS

SHIFT TEST	LINEARITY	REPEATABILITY	ENVIRONMENTAL CONDITIONS
Test Wt: 1000 Tol: 2.5	Test Wt: HB44 Tol: HB44	Test Wt: 1000 Tol: 2.5	☐ Good ☑ Fair ☐ Poor
As-Found: Pass:☑ Fail:☐	As-Found: Pass:☑ Fail:☐	As-Found: Pass:☑ Fail:☐	Temperature: 19.3°C
As-Left: Pass:☑ Fail:☐	As-Left: Pass:☑ Fail:☐	As-Left: Pass:☑ Fail:☐	

CALIBRATION DATA

Standard	As-Found	As-Left	Expanded Uncertainty
1000	999.5	999.5	0.31
700	699.5	699.5	0.31
500	500.0	500.0	0.29
200	200.0	200.0	0.29
100	100.0	100.0	0.29
50	50.0	50.0	0.29

CALIBRATION STANDARDS

Item	Make	Model	Serial Number	Cal Date	Cal Due Date	NIST ID
Avoirdupois Cast W	Rice Lake	25 and 50lb	PWO990-CA	11/24/17	11/2019	20172265

Permanent Information Concerning this Equipment:

10/19 Old s/n 53719

Comments/Information Concerning this Calibration

10/19 RH= 27%. Used 4052 lbs of dead load to be able to walk scale up close to capacity. Accurate to 5052 lbs.

Report prepared/reviewed by: R.B. **Date:** 10-31-19 **Technician:** J. Colacchio
Signature:

THIS CERTIFICATE SHALL NOT BE REPRODUCED, EXCEPT IN FULL, WITHOUT THE APPROVAL OF QUALITY CONTROL SERVICES, INC.

The uncertainty is calculated according to the ISO Guide to the Expression of Uncertainty in Measurement and includes the uncertainty of standards used combined with the observed standard deviation of the unit under test. The uncertainty is expanded with a k factor of 2 for an approximate 95% level of confidence. Instruments listed above were calibrated using standards traceable to the National Institute of Standards and Technology (NIST). Calibration data reflect results at the time and location of calibration. Calibration data should be reviewed to insure that the instrument is performing to its required accuracy.

PT ID: OMNE03

Member: National Conference of Standards Laboratories and Weights & Measures

Certificate of Calibration

Certificate Number: **712014**

JJ Calibrations, Inc.
7724 SE Aspen Summit Drive
Portland, OR 97266-9217
Phone 503.786.3005
FAX 503.786.2994

Omni-Test Laboratories
13327 NE Airport Way
Portland, OR 97230

ACCREDITED
0723.01
Calibration

PO: **190268**
Order Date: **10/29/2019**
Authorized By: **N/A**

Property #: **OMNI-00410**
User: **N/A**
Department: **N/A**
Make: **Dwyer**
Model: **1430**
Serial #: **OMNI-00410**
Description: **Microtector**
Procedure: **500364**
Accuracy: **±0.00025" WC**

Calibrated on: **11/07/2019**
*Recommended Due: **11/07/2020**
Environment: **19** °C **38** % RH
* As Received: **Limited**
* As Returned: **Limited**
Action Taken: **Calibrated**
Technician: **53**

Remarks: * Many factors may cause the unit to drift out of calibration before the recommended due date. Any reported error is the absolute value between the reference and the unit. Uncertainties include the effects of the unit.

Previous limitation continued: Calibrated micrometer head only.

Standards Used

Std ID	Manufacturer	Model	Nomenclature	Due Date	Trace ID
541A	Select	E8FED2	Gage Block Set, 8pc	12/30/2019	689507

Measurement Data

Parameter / Measurement Description	Range Unit	Reference	Min	Max	*Error	UUT	Uncertainty Accredited = ✓
Before/After							
Length							
	Inch	0.1300	0.129	0.131	0.000	0.130 Inch	8.1E-03 ✓
	Inch	0.3850	0.384	0.386	0.000	0.385 Inch	8.1E-03 ✓
	Inch	0.6150	0.614	0.616	0.000	0.615 Inch	8.1E-03 ✓
	Inch	0.8700	0.869	0.871	0.000	0.870 Inch	8.1E-03 ✓
	Inch	1.0000	0.999	1.001	0.000	1.000 Inch	8.1E-03 ✓

This instrument has been calibrated in accordance with the JJ Calibrations Quality Assurance Manual and is traceable to either the SI or to National Institute of Standards and Technology (NIST). The quality system and this certificate are in compliance with ANSI/NCSL Z540-1-1994, ISO/IEC 17025-2017, ISO 10012-1, the ISO 9000 family and QS 9000. The expanded uncertainties of measurements for this calibration are based upon 95% (2 sigma) confidence limits. Unless stated in the comments, certificates reflect the "Simple Acceptance Rule" as specified by JCGM 106:2012. Unless otherwise stated, a test accuracy ration (TAR) of 4:1, if achievable, is maintained. The results reported herein apply only to the calibration of the item described above. This report may not be reproduced, except in full, without written approval of JJ Calibrations.

Reviewer

3 Issued 11/08/2019 Rev # 15

Inspector

ZRE NDIR/O_2

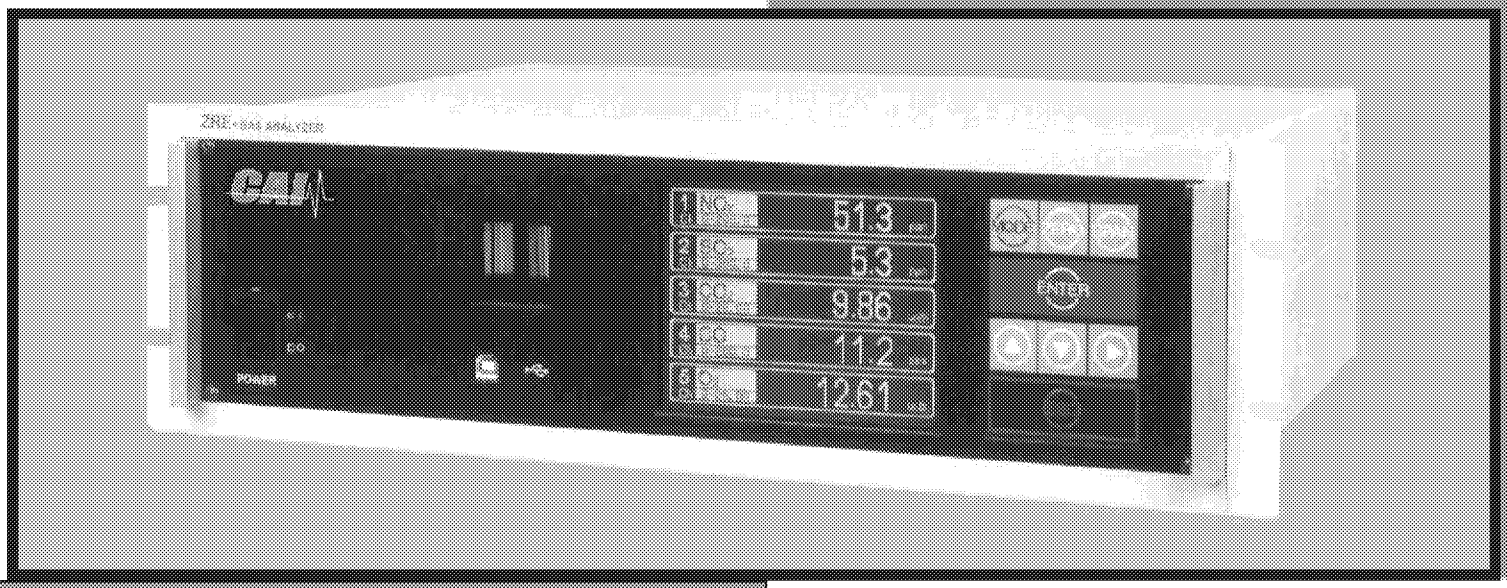

USER'S MANUAL

1312 West Grove Avenue
Orange, CA 92865-4134
Phone: 714-974-5560 Fax: 714-921-2531
www.gasanalyzers.com

Thermal Metering System Calibration
Y Factor

Manufacturer:	APEX
Model:	XC-60-EP
Serial Number:	606001
OMNI Tracking No.:	OMNI-00335
Calibrated Orifice:	☐ Yes

Average Gas Meter y Factor	Orifice Meter dH@
1.009	N/A

Calibration Date:	07/23/19	
Calibrated by:	B. Davis	
Calibration Frequency:	Six months	
Next Calibration Due:	1/23/2020	
Instrument Range:	1.000	cfm
Standard Temp.:	68	oF
Standard Press.:	29.92	"Hg
Barometric Press., Pb:	30.16	"Hg
Signature/Date:		7/23/19

Previous Calibration Comparision

Date	1/21/2019	Acceptable Deviation (5%)	Deviation
y Factor	1.022	0.0511	0.013
Acceptance	Acceptable		

Current Calibration

Acceptable y Deviation	0.020
Maximum y Deviation	0.004
Acceptable dH@ Deviation	N/A
Maximum dH@ Deviation	N/A
Acceptance	Acceptable

Reference Standard *			
Standard Calibrator	Model	Standard Test Meter	
	S/N	OMNI-00001	
	Calib. Date	14-Nov-18	
	Calib. Value	0.9981	y factor (ref)

Calibration Parameters	Run 1	Run 2	Run 3
Reference Meter Pressure ("H2O), Pr	0.00	0.00	0.00
DGM Pressure ("H2O), Pd	2.00	1.38	1.00
Initial Reference Meter	299.7	306.5	312.1
Final Reference Meter	306.4	312	320.9
Initial DGM	0	0	0
Final DGM	6.694	5.54	8.88
Temp. Ref. Meter (°F), Tr	78.0	78.0	78.0
Temperature DGM (°F), Td	88.0	89.0	89.0
Time (min)	34.0	34.0	62.5
Net Volume Ref. Meter, Vr	6.700	5.500	8.800
Net Volume DGM, Vd	6.694	5.54	8.88
Gas Meter y Factor =	**1.013**	**1.008**	**1.007**
Gas Meter y Factor Deviation (from avg.)	0.004	0.001	0.002
Orifice dH@	**N/A**	**N/A**	**N/A**
Orifice dH@ Deviation (from avg.)	N/A	N/A	N/A

where:

1. Deviation = |Average value for all runs - current run value|

** 2. y = [Vr x (y factor (ref)) x (Pb + (Pr/ 13.6)) x (Td + 460)]/ [Vd x (Pb + (Pd / 13.6)) x (Tr + 460)]

** 3. dH@ = 0.0317 x Pd / (Pb (Td + 460)) x [(Tr + 460) x time) / Vr]^2

* Reference calibration is traceable to NIST through NIST Test # 40674, Kimble ASTM E1272, or NIST traceable laboratory

** Equations come from EPA Method 5

The uncertainty of measurement is ±0.14 ft^3/min. This is based on the reference standard having a TAR (Test Accuracy Ratio) of at least 4:1.

Reviewed By 8/27/19

DIFFERENTIAL PRESSURE GAUGE CALIBRATION DATA SHEET

Instrument to be calibrated: Pressure Transducer

Maximum Range: 0-2" WC ID Number: OMNI-00335

Calibration Instrument: Digital Manometer ID Number: OMNI-00633

Date: 7/23/19 By: B. Davis

This form is to be used only in conjunction with Standard Procedure C-SPC.

Range of Calibration Point ("WC)	Digital Manometer Input ("WC)	Pressure Gauge Response ("WC)	Difference (Input - Response)	% Error of Full Span*
0-20% Max. Range 0 - 0.4	0.045	0.042	0.003	0.15
20-40% Max. Range 0.4 - 0.8	0.525	0.526	0.001	0.05
40-60% Max. Range 0.8 – 1.2	1.120	1.124	0.004	0.2
60-80% Max. Range 1.2 – 1.6	1.330	1.336	0.006	0.3
80-100% Max. Range 1.6 – 2.0	1.733	1.739	0.006	0.3

*Acceptable tolerance is 4%.

The uncertainty of measurement is ±0.4" WC. This is based on the reference standard having a TAR (Test Accuracy Ratio) of at least 4:1.

Technician signature: _____ Date: 7/23/19

Reviewed by: _____ Date: 08/27/19

Temperature Calibration
EPA Method 28R, ASTM 2515

Booth:	Temperature Monitor Type:	Equipment Number:
Mobile	National Instruments Logger	00335, 00336

Reference Meter Equipment Number: 00373	Calibration Due Date: 8/02/17

Calibration Performed By:	Date:	Ambient Temperature:	Barometric Pressure:
B. Davis	7/23/19	76	30.16

Input Temperature (F)	Ambient	Meter A	Meter B	Filter A	Filter B	Tunnel	FB Interior
0	1	1	1	1	1	0	0
100	101	101	101	101	101	100	100
300	301	301	302	301	301	300	300
500	501	501	501	501	501	500	500
700	701	701	701	701	701	700	700
1000	1001	1001	1001	1001	1001	1000	1000

Input (F)	FB Top	FB Bottom	FB Back	FB Left	FB Right	Imp A	Imp B	Cat	Stack
0	0	0	0	0	0	1	1	1	1
100	100	100	100	100	100	101	101	101	100
300	300	300	300	300	300	301	301	301	300
500	500	500	500	500	500	501	501	501	501
700	700	700	700	700	700	701	701	701	700
1000	1000	1000	1000	1000	1000	1001	1001	1001	1000
1500								1501	
2000								2001	

Technician signature: [signature] Date: 7/23/19

Reviewed By: [signature] Date: 08/27/19

Thermal Metering System Calibration
Y Factor

Manufacturer:	APEX
Model:	XC-60-EP
Serial Number:	606002
OMNI Tracking No.:	OMNI-00336
Calibrated Orifice:	☐ Yes

Average Gas Meter y Factor	Orifice Meter dH@
0.990	N/A

Calibration Date:	07/23/19	
Calibrated by:	B. Davis	
Calibration Frequency:	Six months	
Next Calibration Due:	1/23/2020	
Instrument Range:	1.000	cfm
Standard Temp.:	68	oF
Standard Press.:	29.92	"Hg
Barometric Press., Pb:	30.16	"Hg
Signature/Date:		7/23/19

Previous Calibration Comparision

Date	1/21/2019	Acceptable Deviation (5%)	Deviation
y Factor	0.995	0.04975	0.005
Acceptance	Acceptable		

Current Calibration

Acceptable y Deviation	0.020
Maximum y Deviation	0.001
Acceptable dH@ Deviation	N/A
Maximum dH@ Deviation	N/A
Acceptance	Acceptable

Reference Standard *			
Standard Calibrator	Model	Standard Test Meter	
	S/N	OMNI-00001	
	Calib. Date	14-Nov-18	
	Calib. Value	0.9981	y factor (ref)

Calibration Parameters	Run 1	Run 2	Run 3
Reference Meter Pressure ("H2O), Pr	0.00	0.00	0.00
DGM Pressure ("H2O), Pd	1.94	1.20	0.80
Initial Reference Meter	321	326.1	331.2
Final Reference Meter	326.003	331.1	336.6
Initial DGM	0	0	0
Final DGM	5.107	5.124	5.549
Temp. Ref. Meter (°F), Tr	78.0	78.0	78.0
Temperature DGM (°F), Td	88.0	88.0	89.0
Time (min)	23.8	29.0	38.0
Net Volume Ref. Meter, Vr	5.003	5.000	5.400
Net Volume DGM, Vd	5.107	5.124	5.549
Gas Meter y Factor =	**0.991**	**0.989**	**0.989**
Gas Meter y Factor Deviation (from avg.)	0.001	0.001	0.001
Orifice dH@	**N/A**	**N/A**	**N/A**
Orifice dH@ Deviation (from avg.)	N/A	N/A	N/A

where:

1. Deviation = |Average value for all runs - current run value|

** 2. y = [Vr x (y factor (ref)) x (Pb + (Pr/ 13.6)) x (Td + 460)]/ [Vd x (Pb + (Pd / 13.6)) x (Tr + 460)]

** 3. dH@ = 0.0317 x Pd / (Pb (Td + 460)) x [(Tr + 460) x time) / Vr]^2

* Reference calibration is traceable to NIST through NIST Test # 40674, Kimble ASTM E1272, or NIST traceable laboratory

** Equations come from EPA Method 5

The uncertainty of measurement is ±0.14 ft^3/min. This is based on the reference standard having a TAR (Test Accuracy Ratio) of at least 4:1.

Reviewed By 8/27/19

DIFFERENTIAL PRESSURE GAUGE CALIBRATION DATA SHEET

Instrument to be calibrated: Pressure Transducer

Maximum Range: 0-2" WC ID Number: OMNI-00336

Calibration Instrument: Digital Manometer ID Number: OMNI-00633

Date: 7/23/19 By: B. Davis

This form is to be used only in conjunction with Standard Procedure C-SPC.

Range of Calibration Point ("WC)	Digital Manometer Input ("WC)	Pressure Gauge Response ("WC)	Difference (Input - Response)	% Error of Full Span*
0-20% Max. Range 0 - 0.4	0.99	0.102	0.003	0.15
20-40% Max. Range 0.4 - 0.8	0.727	0.730	0.003	0.15
40-60% Max. Range 0.8 – 1.2	0.951	0.953	0.002	0.10
60-80% Max. Range 1.2 – 1.6	1.466	1.470	0.006	0.30
80-100% Max. Range 1.6 – 2.0	1.714	1.718	0.004	0.20

*Acceptable tolerance is 4%.

The uncertainty of measurement is ±0.4" WC. This is based on the reference standard having a TAR (Test Accuracy Ratio) of at least 4:1.

Technician signature: _____ Date: 7/23/19

Reviewed by: _____ Date: 08/27/19

Temperature Calibration
EPA Method 28R, ASTM 2515

Booth:	Temperature Monitor Type:	Equipment Number:
Mobile	National Instruments Logger	00335, 00336

Reference Meter Equipment Number: 00373	Calibration Due Date: 8/02/17

Calibration Performed By:	Date:	Ambient Temperature:	Barometric Pressure:
B. Davis	7/23/19	76	30.16

Input Temperature (F)	Ambient	Meter A	Meter B	Filter A	Filter B	Tunnel	FB Interior
0	1	1	1	1	1	0	0
100	101	101	101	101	101	100	100
300	301	301	302	301	301	300	300
500	501	501	501	501	501	500	500
700	701	701	701	701	701	700	700
1000	1001	1001	1001	1001	1001	1000	1000

Input (F)	FB Top	FB Bottom	FB Back	FB Left	FB Right	Imp A	Imp B	Cat	Stack
0	0	0	0	0	0	1	1	1	1
100	100	100	100	100	100	101	101	101	100
300	300	300	300	300	300	301	301	301	300
500	500	500	500	500	500	501	501	501	501
700	700	700	700	700	700	701	701	701	700
1000	1000	1000	1000	1000	1000	1001	1001	1001	1000
1500								1501	
2000								2001	

Technician signature: [signature] Date: 7/23/19

Reviewed By: [signature] Date: 08/27/19

Certificate of Calibration

Certificate Number: **707901**

JJ Calibrations, Inc.
7724 SE Aspen Summit Drive
Portland, OR 97266-9217
Phone 503.786.3005
FAX 503.786.2994

Omni-Test Laboratories
13327 NE Airport Way
Portland, OR 97230

PO: **190258**
Order Date: 09/03/2019
Authorized By: **N/A**

Property #: OMNI-00430
User: N/A
Department: N/A
Make: Delmhorst
Model: MCS-1
Serial #: OMNI 00430
Description: Moisture Calibrator
Procedure: Raw Data
Accuracy: Raw Data

Calibrated on: 09/09/2019
*Recommended Due: 09/09/2020
Environment: 22 °C 53 % RH
As Received: Other - See Remarks
As Returned: Other - See Remarks
Action Taken: Calibrated
Technician: **40**

Remarks: * Many factors may cause the unit to drift out of calibration before the recommended due date. Any reported error is the absolute value between the reference and the unit.

Data is provided for your determination of acceptability and reported measure value only.

Standards Used

Std ID	Manufacturer	Model	Nomenclature	Due Date	Trace ID
281A	Hewlett-Packard	3458A	Digital Bench Multimeter, 8.5	06/18/2020	700481

Measurement Data

Parameter / Measurement Description	Range Unit	Reference	Min	Max	*Error	UUT
Before/After						
Resistance						
12 %	120 MOhm	0.00000	0.0000	0.0000	120.5641	120.5641 MOhm
22 %	1.1 MOhm	0.0000000	0.000000	0.000000	1.100236	1.100236 MOhm

JJ Calibrations, Inc. certifies that this instrument has been calibrated in accordance with the JJ Calibrations Quality Assurance Manual with the stated procedure using standards that are traceable to the National Institute of Standards and Technology (NIST), or other National Measurement Institutes (NMI's), or by using natural physical constants, intrinsic standards or ratio calibration techniques. The quality system and this certificate are in compliance with ANSI/NCSL Z540-1-1994, ISO/IEC 17025-2005, ISO 10012-1, the ISO 9000 family and QS 9000. The expanded uncertainties of measurements for this calibration are based upon 95% (2 sigma) confidence limits. Unless otherwise stated, a test accuracy ratio (TAR) of 4:1, if achievable, is maintained. The results reported herein apply only to the calibration of the item described above. This report may not be reproduced, except in full, without prior written consent of JJ Calibrations, Inc.
JJ Calibrations, Inc. quality system has been assessed and accredited to ISO/IEC 17025:2005.

Reviewer

Issued 09/11/2019 Rev # 15

Inspector

Tektronix®

Certificate of Calibration

14956685

Instrument Identification

Company ID: 74857
OMNI-TEST
MICHAEL CASTILLO
13327 NE ARIPORT WAY
PORTLAND, OR 97230

PO Number: 190251

Instrument ID: **OMNI-00677**
Manufacturer: DWYER INSTRUMENTS
Description: ANEMOMETER VANE

Model Number: VT-200
Serial Number: 18200149

Certificate Information

Reason For Service: CALIBRATION
Type of Cal: NORMAL
As Found Condition: IN TOLERANCE
As Left Condition: IN TOLERANCE
Procedure: 33K6-4-1769-1 VELOCITY, TEMP, AND FLOW REV: 9/30/15
Remarks:

Technician: RYAN EDWARDS
Cal Date 04Sep2019
Cal Due Date: 04Sep2020
Interval: 12 MONTHS
Temperature: 23.0 C
Humidity: 61.0 %

Tektronix certifies the performance of the above instrument has been verified using test equipment of known accuracy, which is traceable to the International System of Units (SI), National Metrology Institutes (NIST, NPL, PTB), derived from ratio type measurements, compared to reference materials or recognized consensus standards. The policies and procedures comply with ANSI/NCSL Z540.1-1994.
The quality system complies with ISO9001.

This certificate shall not be reproduced, except in full, without the written consent of Tektronix.

Approved By: RYAN EDWARDS
Service Representative

Issue Date: 9/4/2019

Calibration Standards

NIST Traceable#	Inst. ID#	Description	Manufacturer	Model	Cal Date	Date Due
14717431	17021560	TEMP/HUM RECORDER	OMEGA	ITHX-SD	08Jun2019	08Jul2020
14942663	38-1005980	PITOT TUBE AIRFLOW SYSTEM	SYPRIS	AF12319/PX653	16Aug2019	16Feb2021
14468373	38-1007264	PLATINUM RESISTANCE THERMOMETER	HART SCIENTIFIC	1502A/5612	15Mar2019	15Mar2020

9639 Interocean Drive • Cincinnati, OH 45246 • Phone: 513-870-4730 • Fax: 513-874-7752

Tektronix®

Certificate of Calibration

14956685

Calibration Standards

NIST Traceable#	Inst. ID#	Description	Manufacturer	Model	Cal Date	Date Due
14330222	38-1018828	TEMP/HUMIDITY PROBE	VAISALA	HMP45A	30Jan2019	30Jan2020
14333248	38-1037024	BAROMETRIC TRANSDUCER	OMEGADYNE	PX02K1-28A5T	31Jan2019	31Jan2020
14302838	B0023974	DATA ACQUISITION/SWITCH UNIT	AGILENT	34970A	22Jan2019	22Feb2020
14550342	H058567	DIGITAL PRESSURE GAGE	MENSOR	2101	09Apr2019	09Jun2020

9639 Interocean Drive • Cincinnati, OH 45246 • Phone: 513-870-4730 • Fax: 513-874-7752

Section 3

Owner's Manual

Central Boiler, Inc.
20502 160th Street
Greenbush, MN 56726

Serial No: Date Manufactured:

Model: Classic Edge 360

U.S. ENVIRONMENTAL PROTECTION AGENCY Certified to comply with the 2020 particulate emission standards using cord wood.

Tested to: ASTM E2618-13, ASTM E2515-11, CAN/CSA-B415.1-10 (R2015)
Meets: EPA Step 2 Emission Level

Total Particulate Matter: 2.1 g/hr annual weighted average
0.12 lbs/Million Btu heat output

Thermal Output Rating: 0 - 148,625 Btu/hr

Firebox Volume: 10 cubic ft

Appliance needs periodic inspection and repair for proper operation. Consult owner's manual for further information. It is against federal regulations to operate this appliance in a manner inconsistent with operating instructions in the owner's manual.

p/n: 7000867

Tested & Listed By Portland Oregon USA

OMNI-Test Laboratories, Inc.

Report (rapport) # 0117WB036S (12/2014), 0117WB040E

Central Boiler
20502 160th Street
Greenbush, MN 56726

Serial No. (Numéro de série)	Model (Modèle)	Month/Year Manufactured (Date de fabrication)

Solid Fuel Only Models: Classic Edge 360 Outdoor Wood Furnace

Listed by OMNI-Test Laboratories to the applicable portions of the following standards: UL 2523-2018 Solid Fuel-Fired Hydronic Heating Appliances, Water Heaters and Boilers, CAN/CSA B415.1-10 (R2015) Performance Testing of Solid-Fuel-Burning Heating Appliances, CSA-B366.1-11 (R2015) Solid-Fuel-Fired Central Heating Appliance, ASTM E2618-13 Standard Test Method for Measurement of Particulate Emissions and Heating Efficiency of Solid Fuel-Fired Hydronic Heating Appliances, ASTM E2515-11 Standard Test Method for Determination of Particulate Matter Emissions Collected by a Dilution Tunnel.

For outdoor installations only; Category I Boiler.

May be connected to existing boiler system by qualified installer only.

Never fire appliance with water level below the FULL mark.

DO NOT ATTEMPT TO LIGHT A FIRE WHEN THERE IS GAS VAPOR PRESENT.

FOR SAFETY, KEEP FIREBOX DOOR LATCHED. Leaving the firebox door open may lead to a runaway fire.

THE APPLIANCE, CHIMNEY, AND AUXILIARY BURNER MUST BE KEPT IN GOOD CONDITION AND CLEANED WHEN NECESSARY.

THE HEAT EXCHANGER, FLUE PIPE, AND CHIMNEY MUST BE CLEANED REGULARLY TO REMOVE ACCUMULATED CREOSOTE AND ASH. ENSURE THAT THE HEAT EXCHANGER, FLUE PIPE, AND CHIMNEY ARE CLEANED AT THE END OF EACH HEATING SEASON TO MINIMIZE CORROSION DURING THE SUMMER MONTHS. THE APPLIANCE, FLUE PIPE, AND CHIMNEY MUST BE IN GOOD CONDITION. THESE INSTRUCTIONS ALSO APPLY IF A DRAFT INDUCER IS USED.

A POWER GENERATOR MAY BE USED IN EVENT OF POWER FAILURE TO PREVENT LINES FROM FREEZING.

DO NOT CONNECT THIS APPLIANCE TO CHIMNEY FLUE SERVING ANOTHER APPLIANCE.

Installation Clearances to Combustibles

44 in. (1.12 m) from the back, 48 in. (1.22 m) from the front, 12 in. (0.3 m) from the sides, 18 in. (0.46 m) from the chimney inspection cover

Do not store wood or other combustible material within installation clearances. Base - Noncombustible; concrete preferred for all models. Minimum recommended chimney length is 8 ft (two 4-ft sections, p/n 10508, supplied). Adjust flue draft between -0.010 and -0.030 in. WC (-2.490 and -7.470 Pa). Unsafe to adjust flue draft higher than -0.050 in. WC (-12.450 Pa). Maximum Circuit Breaker: 120 Volts, 50/60 Hz, 15 Amps. Maximum Auxiliary Outlet Load: 120 Volts, 50/60 Hz, 7 Amps.

Firebox Fuel

BURN WOOD ONLY; LOAD WITH CAUTION TO PREVENT DAMAGE TO APPLIANCE. DO NOT BURN GARBAGE, GASOLINE, NAPHTHA, ENGINE OIL, OR OTHER INAPPROPRIATE MATERIALS. DO NOT USE CHEMICALS OR FLUIDS TO START FIRE.

Refer to Owner's Manual for further instructions.

Modèles à combustible solide seulement : Chaudière Extérieure à Bois Classic Edge 360

La chaudière hydronique extérieure Classic Edge fabriquée par Central Boiler a été certifiée par les laboratoires OMNI-Test conforme aux sections applicables des normes suivantes : UL 2523-2018 Appareils de chauffage hydroniques, chauffe-eaux et chaudières à eau à combustibles solides, CAN/CSA B415.1-10 (R2015) Essais et rendement des appareils de chauffage à combustibles solides, CSA-B366.1-11 (R2015) Appareil de chauffage central à combustibles solides, ASTM E2618-13 Protocole d'essais standard destiné à mesurer les émissions de particules et le rendement thermique des appareils de chauffage hydroniques à combustibles solides, ASTM E2515-11 Protocole d'essais standard destiné à déterminer les émissions de particules recueillies par un tunnel de dilution.

Ne convient qu'à des installations extérieures; chaudières de catégorie I.

Peut être connecté à une chaudière existante uniquement par un installateur qualifié.

Ne démarrez jamais l'appareil si le niveau d'eau se situe en deçà du repère FULL (PLEIN).

N'ESSAYEZ PAS D'ALLUMER UN FEU EN PRÉSENCE DE VAPEURS DE GAZ.

À DES FINS DE SÉCURITÉ, GARDEZ FERMÉE LA PORTE DE LA CHAMBRE DE COMBUSTION. Si vous la laissez ouverte, cela peut provoquer un incendie incontrôlé.

L'APPAREIL ET LA CHEMINÉE DOIVENT ÊTRE, AU BESOIN, NETTOYÉS ET MAINTENUS EN BON ÉTAT.

L'ÉCHANGEUR THERMIQUE, LE CARNEAU DE FUMÉES ET LA CHEMINÉE DOIVENT ÊTRE NETTOYÉS RÉGULIÈREMENT AFIN D'ÉLIMINER LES ACCUMULATIONS DE CRÉOSOTE ET DE CENDRES. ASSUREZ-VOUS DE NETTOYER L'ÉCHANGEUR THERMIQUE, LE CARNEAU DE FUMÉES ET LA CHEMINÉE À LA FIN DE CHAQUE SAISON DE CHAUFFE AFIN DE MINIMISER LES RISQUES DE CORROSION DURANT LES MOIS CHAUDS. L'APPAREIL, LE CARNEAU DE FUMÉES ET LA CHEMINÉE DOIVENT ÊTRE EN BON ÉTAT. CES INSTRUCTIONS SONT ÉGALEMENT VALABLES SI LE SYSTÈME EST DOTÉ D'UN DISPOSITIF D'ASPIRATION.

EN CAS DE PANNE D'ÉLECTRICITÉ, POUR ÉVITER QUE LES CANALISATIONS NE GÈLENT, UNE GÉNÉRATRICE ÉLECTRIQUE PEUT ÊTRE UTILISÉE.

NE CONNECTEZ PAS CET APPAREIL À UNE CONDUITE DE CHEMINÉE DE CHEMINÉE SERVANT UN AUTRE.

Installation et Espace Libre jusqu'à des Matériaux Combustibles

112 cm (44 pouces) à partir de l'arrière / 122 cm (48 pouces) à partir du devant / 30 cm (12 pouces) à partir des côtés / à 46 cm (18 pouces) du raccord de cheminée

N'entreposez ni bois ni autre forme de combustible à l'intérieur de la zone de dégagement de l'installation. Base – non combustible; le béton est préféré pour tous les modèles. La longueur de cheminée recommandée s'élève à huit pieds (deux sections de quatre pieds, p/n 10508). Réglez le tirage du carneau entre -0,01 et -0,03 pouce de colonne d'eau (-2,490 et -7,470 Pa). Il est dangereux de régler le tirage sur une valeur supérieure à -0,05 pouce de colonne d'eau. Disjoncteur maximale : 120 V, 50/60 Hz, circuit 15 A. Charge maximale prise de courant auxiliaire : 120 V, 50/60 Hz, circuit 7 A.

Combustible pour chambre de combustion

NE BRÛLEZ QUE DU BOIS; CHARGEZ-LE AVEC PRÉCAUTION POUR ÉVITER D'ENDOMMAGER L'APPAREIL. NE PAS BRÛLER DE DÉCHETS, D'ESSENCE, DE NAPHTE, D'HUILE MOTEUR OU TOUT AUTRE PRODUIT INAPPROPRIÉ. NE PAS UTILISER DE PRODUITS CHIMIQUES OU DE LIQUIDES INFLAMMABLES POUR L'ALLUMAGE.

Pour des directives additionnelles, reportez-vous au manuel d'utilisation.

CENTRAL BOILER®

CLASSIC EDGE™

TITANIUM HDX SERIES

OUTDOOR WOOD FURNACE

OWNER'S MANUAL

CLASSIC EDGE 360

TITANIUM HDX SERIES

WARNING: If the information in this manual is not followed exactly, a fire or explosion may result causing property damage, personal injury or loss of life.

- **Do not store or use gasoline or other flammable vapors and liquids in the vicinity of this or any other appliance.**
- **WHAT TO DO IF YOU SMELL GAS**
  - **Do not try to light any appliance.**
  - **Do not touch any electrical switch.**
  - **Immediately call your gas supplier. Follow the supplier's instructions.**
  - **If you cannot reach your gas supplier, call the fire department.**
- **Installation and service must be performed by a qualified installer, service agency or the gas supplier.**

EM
C US
0117WB036S
0117WB040E

MADE IN U.S.A.

SAVE THESE INSTRUCTIONS

(p/n 9000723 - REV. A) - DRAFT

Central Boiler, Inc. • 20502 160th Street • Greenbush, MN 56726
CentralBoiler.com

The Classic Edge outdoor hydronic heater by Central Boiler is listed by OMNI-Test Laboratories to the applicable portions of the following standards: UL 2523-2018 Solid Fuel-Fired Hydronic Heating Appliances, Water Heaters and Boilers, CAN/CSA B415.1-10 (R2015) Performance Testing of Solid-Fuel-Burning Heating Appliances, CSA-B366.1-11 (R2015) Solid-Fuel-Fired Central Heating Appliance, ASTM E2618-13 Standard Test Method for Measurement of Particulate Emissions and Heating Efficiency of Solid Fuel-Fired Hydronic Heating Appliances, ASTM E2515-11 Standard Test Method for Determination of Particulate Matter Emissions Collected by a Dilution Tunnel.

The Classic Edge 360 includes two 4-foot stainless steel insulated chimney sections (6" in diameter, p/n 6500004). Use only stainless steel solid fuel chimneys specified by Central Boiler. Maximum draft is marked on nameplate.

French Owner's Manual is available at CentralBoiler.com/support or upon request from your dealer
(Manuel d'installation en français disponible sur demande auprès de votre revendeur)

CLASSIC EDGE 360 — Annual Efficiency Rating*: 88% (lower heating value), 82% (higher heating value)
Manufacturer's Rated Heat Output Capacity: 150,000 Btu/hr | Range**: 0 to 148,625 Btu/hr.
Water Capacity: 150 gal. | Weight: 1,460 lbs

*Performance is a product of the combustion rate, combustion efficiency and heat exchange efficiency with a single fuel load without refueling. Results vary based on wood species, wood quality, wood quantity and moisture content. Efficiencies are determined under the same test conditions using higher heating value, lower heating value and annual fuel utilization efficiency (AFUE).

- This heater meets the 2020 U.S. Environmental Protection Agency's cord wood emission limits for wood heaters sold after May 15, 2020. Under specific test conditions this heater has been shown to deliver heat at rates shown for the respective model above**.
- This wood heater has a manufacturer-set minimum low burn rate that must not be altered. This wood heater needs periodic inspection and repair for proper operation. It is against federal regulations to operate this wood heater in a manner inconsistent with operating instructions in this manual.
- DO NOT OVERFIRE THIS HEATER. Attempts to achieve heat output rates that exceed heater design specifications can result in permanent damage to the heater.
- Any person(s) operating a hydronic heater must comply with all applicable laws, including but not limited to local ordinances.
- Improper use or failure to maintain the hydronic heater may cause nuisance conditions. The person(s) operating a hydronic heater is/are responsible for operation in a manner that does not create a nuisance condition. Meeting the setback distance and stack height recommendations from the manufacturer and requirements in applicable State and local regulations may not always be adequate to prevent nuisance conditions in some areas due to terrain or other factors.
- Operating an outdoor furnace may not be suitable to some individuals' abilities or lifestyles. Be sure to review the Owner's Manual for the appliance with your dealer.

- Register at time of purchase for FREE 25 Year Limited Warranty -

Verify your warranty and check status of water samples at: CentralBoiler.com/w25

For parts and accessories, service or repairs, call your authorized Central Boiler dealer or heating contractor. Record the information below for future reference.

Model	Serial Number	Installation Date
Dealership Name		Phone Number
Owner Name		

Contents

How to Use This Guide

The guide is divided into sections to help with the operation and maintenance of the outdoor furnace. If questions arise that are not answered with this manual, consult with your authorized Central Boiler dealer.

Central Boiler Online Resources Iv
EPA Resources Iv
Labeling and Terminology 1

Important Precautionary Information 2
Foundation 4
Access to Ports on Outdoor Furnace 5
Ground Rod Kit 6
Furnace Installation - Connecting to Your Existing System 6
Outdoor Wood Furnace Best Burn Practices 8
Chimney Recommendations 8
Chimney Installation 8

Water Quality and Maintenance 11
Initial Water Treatment, Fill and Testing 11
Titanium Series Models - Water Samples 12
Water Sample Kit 12
When to Submit Water Sample 12
System Maintenance 13
Water Test Kits and Test Results 13
Post Heating Season Maintenance 14
Flushing the System 14

Wood Selection and Preparation 16

Operating Instructions 17
FireStar Combustion Controller 17
How the Classic Edge Works 17
Cold Start Firing 19
Adding Heat Load 21
Ash Removal Frequency 21
Adding Wood 21

Maintenance Schedule 26
Control Locations 27
Routine Maintenance 27
Maintenance Sections 28

Serviceable Items 40
Firebox Door Hinge / Latch Bearing Adjustment 40
Firebox Door Seal 40
Reaction Chamber Door Seal 42
Heat Exchanger Door Seal 43
Circuit Breaker 44
Airbox Seal 45
Air Charge Tube and Refractory Modules 46
Thermocouple 47
Heat Exchanger Door Insulation 48
Heat Exchanger Access Cover Insulation 49
Combustion Air Tube / Front Air Channel 50

Troubleshooting 52

General Information 61

Wiring Diagram 62

Water Sample Information - Titanium Series Models 63

CENTRAL BOILER ONLINE RESOURCES

Enter **CentralBoiler.com** in your browser or scan the code using any QR code reader app on your smartphone to access Central Boiler's library of information to help with installation, operation and maintenance of your Central Boiler outdoor furnace.

Detailed Furnace Installation Variations - https://www.CentralBoiler.com/explore/furnace-installation/

View and/or download PDFs to assist in installation of your outdoor furnace. Information and examples regarding pumps, foundations, chimneys and support structures, ThermoPEX piping, and example configurations for a variety of heating configurations.

Online Support Center

https://www.CentralBoiler.com/Support/

Enter your furnace serial number and find articles, answers, parts and more information.

Online Support Center

CentralBoiler.com/Support

Enter your serial number for information specific to your furnace.

Write your ***serial number*** here for future reference.

Videos to supplement the Owner's Manual are available at
www.youtube.com/centralboilerinc
Watch tips on initial startup, testing system water and more.

EPA RESOURCES

EPA's Burnwise Program - https://www.epa.gov/burnwise

How to Use a Moisture Meter Video - http://www.youtube.com/watch?v=jM2WGgRcnm0

EPA offers tips on how to properly use a moisture meter to test firewood before using in a wood-burning stove or fireplace. Wet wood can create excessive smoke which is wasted fuel.

Split, Stack, Cover and Store Video - http://www.youtube.com/watch?v=yo1--Zrh11s

EPA offers four simple steps to properly dry firewood before using in a wood-burning stove or fireplace. Wet wood can create excessive smoke which is wasted fuel. Burning dry, seasoned firewood with a moisture content of 20% or less can save money and help reduce harmful air pollution.

Resources to Help Burn Wood the Right Way - https://www.epa.gov/burnwise/resources-help-you-burn-wood-right-way-and-promote-burn-wise-program
Find tip sheets, brochure and flyers, and more information.

NOTE: The warranty can be voided by operating a residential hydronic heater in a manner inconsistent with the Owner's Manual.

INSTALLATIONS IN MASSACHUSETTS:

1. All installation components must be products approved in the Commonwealth of Massachusetts by the Gas and Plumbing Board.
2. The maximum run of tubing from the water heater to a fan coil is 50 linear feet.
3. Persons operating this hydronic heater are responsible for operation of the hydronic heater so as not to cause a condition of air pollution as defined in 310 CMR 7.01(1).

Labeling and Terminology

The outdoor furnace and this installation guide use the following terms and symbols to bring attention to the presence of hazards of various risk levels and important information concerning the use and maintenance of the outdoor furnace.

⚠ DANGER

This symbol and text indicate an imminently hazardous situation which, if ignored, will result in death or serious injury.

⚠ WARNING

This symbol and text indicate the presence of a hazard which can cause severe personal injury or death to an operator or bystander, or substantial property damage if ignored.

⚠ CAUTION

This symbol and text indicate the presence of a hazard which can cause minor personal injury or property damage if ignored.

NOTE: **Indicates supplementary information worthy of particular attention relating to installation, operation, or maintenance of the outdoor furnace but is not related to a hazardous condition.**

Be sure to follow all instructions and related precautions as they are meant for your safety and protection. Store this manual in a readily accessible location for future reference.

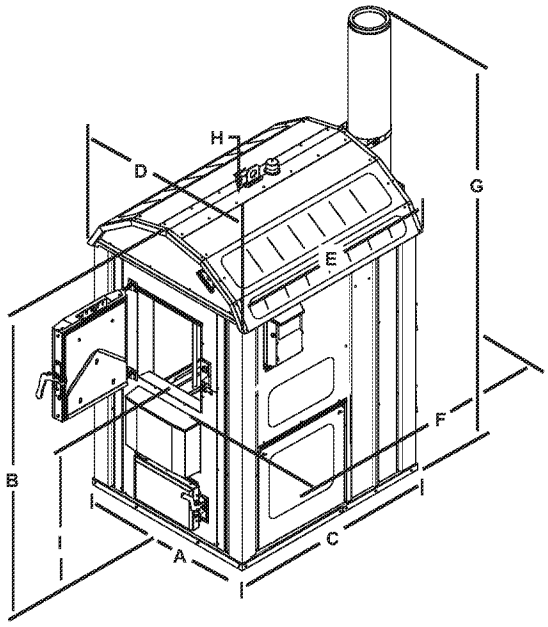

Classic Edge 360 Measurements

	A	B	C	D	E	F	G	H	I
in.	40.5	72	50.75	43	51.5	69	150	5	38
cm	103	183	129	109	131	175	381	13	97

- Measurement (F) is from firebox door to chimney inspection cover.
- Measurement (G) includes two 4 ft (1.2 m) chimney sections.
- All measurements are approximate

© 2020 Central Boiler

Important Precautionary Information

Be sure to read carefully and understand these precautions before, during and after the installation, operation and maintenance of the furnace.

NOTE: All operations must be in accordance with local and state codes which may differ from the information in this manual.

⚠ CAUTION

This outdoor furnace is not intended to be the only source of heat. In the event of a prolonged power failure, a generator may be used to prevent lines from freezing. Should the outdoor furnace be left unattended, run out of fuel or require service, an alternate heating source in the building being heated should be in place to prevent damage caused by freezing.

⚠ WARNING

This outdoor furnace and/or chimney is not intended or safety tested to be used or installed in a building where contents of that building could be damaged or where a financial loss could occur from smoke, soot, fire or water.

⚠ WARNING

The outdoor furnace vent cap must fit loosely on the vent opening. Do not force the cap down or try to seal it tightly onto the vent pipe. Do not extend or restrict the vent pipe or opening. DO NOT ALLOW THE OUTDOOR FURNACE TO BE PRESSURIZED.

© 2008 Central Boiler

⚠ WARNING

Be sure the outdoor furnace is filled with water before firing. Never fire the outdoor furnace when the water level is more than 1" (2.5 cm) below the FULL mark on the sight gauge. 1650XL Inhibitor Plus and Molyboost must be added before the initial fill (see Water Quality and Maintenance).

⚠ WARNING

Disconnect the electrical power to the outdoor furnace before replacing an electrical component.

⚠ WARNING

Do not attempt service inside the electrical control panel without first disconnecting the electrical power at the main power source.

NOTE: Any electrical installation should be done by a qualified installer in accordance with applicable codes.

⚠ WARNING

Allow the outdoor furnace to thoroughly cool and completely clean out the firebox before draining water from the outdoor furnace. If the water in the outdoor furnace ever boils, be sure to check the water level and restore to full. If water is added, the proper level of 1650XL Inhibitor Plus (p/n 1650) must be maintained.

⚠ WARNING

When cleaning the outdoor furnace, be careful not to spill any coals.

⚠ WARNING

ALWAYS store ash in a covered non-combustible container.

⚠ WARNING

Do not allow combustible materials (straw, hay or wood) near the outdoor furnace. Keep the perimeter of the outdoor furnace clear and clean.

⚠ WARNING

For fire safety, keep all combustible materials at least six feet (two meters) away from the outdoor furnace, especially around the door area. Debris of wood chips and other combustibles in the area may be easily ignited if a hot coal is spilled out of the firebox and left unnoticed.

⚠ WARNING

The firebox door must be closed and latched at all times except when filling the firebox with wood. Leaving the firebox door open may lead to a runaway fire. In the event of a runaway fire, close the firebox door. In the event of a chimney or soot fire, close the firebox door and make sure power is off to the outdoor furnace.

⚠ WARNING

All covers must be maintained at all times except during maintenance, inspection and service.

⚠ WARNING

When opening the firebox door, the door switch will shut off the primary air actuator motor while the firebox door is open. Do NOT disable the door switch.

NOTE: The prohibition against burning these materials does not prohibit the use of fire starters made from paper, cardboard, saw dust, wax and similar substances for the purpose of starting a fire in an affected wood heater.

NOTE: Do not use chemicals or fluids to start the fire. Use kindling or gas-fired wood ignition option to start an initial fire.

NOTE: The sight gauge valve should always be closed, except when checking water level. Water will automatically drain from the sight gauge tube when the valve is closed. Remember that this type of valve requires only 1/4 turn to open or close.

⚠ WARNING

This heater is designed to burn natural wood only. DO NOT BURN: unseasoned wood, treated wood, colored paper, cardboard, trash or garbage.

NOTE: Chloride or sulfurous gases can be generated if plastic or rubber is burned and will mix with the moisture from the wood and form hydrochloric or sulfuric acids in the firebox, creating corrosion.

NOTE: This outdoor furnace is not to be used with an automatic stoker.

⚠ CAUTION

This outdoor furnace is not to be connected to a chimney flue serving another appliance.

⚠ WARNING

When adding wood to the firebox, be careful not to get pinched between the wood and the door frame, or any part of the outdoor furnace. Use extreme care with large pieces of wood that may be difficult to handle.

Tools

Included with each new furnace are tools that are invaluable for maintenance and cleaning. Use the **maintenance tool** to clean the firebox and to remove ash from the Reaction Chamber. The maintenance tool is also used for cleaning the firebox and door frame. The **cleaning rod** can be used to break up heavy or solidified ash in the firebox. It is also used to clean the heat exchangers. The **Reaction Chamber cleaning tool** is used to clean ash from the Reaction Chamber.

Refer to the Maintenance section for more information.

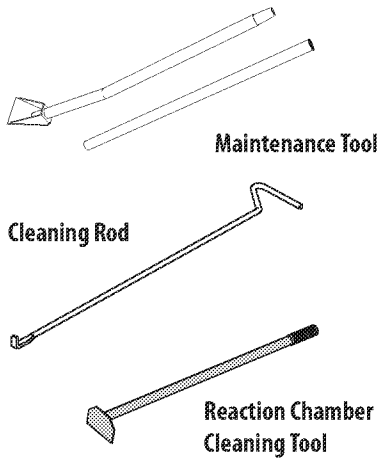

Foundation

The outdoor furnace may be installed directly on stable, level ground without the necessity of a foundation, although installing the outdoor furnace on a foundation offers many advantages. The outdoor furnace is less likely to move due to frost heaving. A foundation keeps the area directly around the outdoor furnace free of standing water and can help to keep unwanted pests out. It can also raise the furnace up to provide a more comfortable height of the firebox door opening.

If the ground is unstable, one option is to use patio blocks under the perimeter of the base. Another option is to pour a concrete foundation.

To install the outdoor furnace on a concrete foundation, refer to the illustration for dimensions and for the location of the hollowed-out area for each model. A 4" to 6" (10 to 15 cm) thick concrete slab works well; however, a thicker slab may be used to obtain the desired door opening height.

If the area for the concrete slab is unstable and/or affected by frost heaving, consider installing 2" closed-cell insulation beneath the front portion of the slab and under the area of the ground used for walking.

⚠ CAUTION

Do not use any combustible materials for the foundation.

NOTE: The installation surface or foundation must be noncombustible. The hot supply and return lines must also be protected from possible exposure to sunlight, fire or physical damage that may be caused by an occurrence outside the outdoor furnace enclosure. Foundations may consist of concrete, crushed rock or patio blocks.

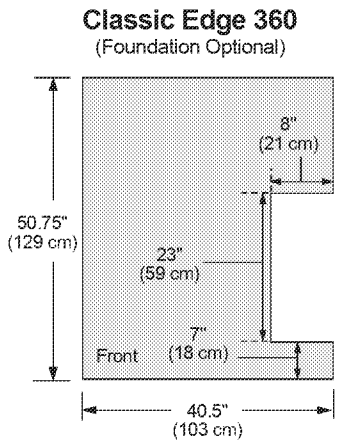

⚠CAUTION
Do not use any combustible materials for the foundation.

Outdoor furnace must be installed on a noncombustible surface or foundation that incorporates an enclosure that will prevent supply and return lines from possible exposure to sunlight, fire, or physical damage that may be caused by an occurrence outside the outdoor furnace enclosure. Foundation may consist of concrete, crushed rock, or patio blocks.

© 2020 Central Boiler

Access to Ports on Outdoor Furnace

Ports are provided that allow mounting circulation pumps on the outdoor furnace. Refer to the illustrations in this section for proper supply and return line and pump installations for your model.

NOTE: The Installation Guide provides more information on pump selection. For even more detailed information, see the Hydronic Component Selection Guide (p/n 2482), available from your Central Boiler dealer.

Classic Edge 360 Models – 1-Pump Configuration

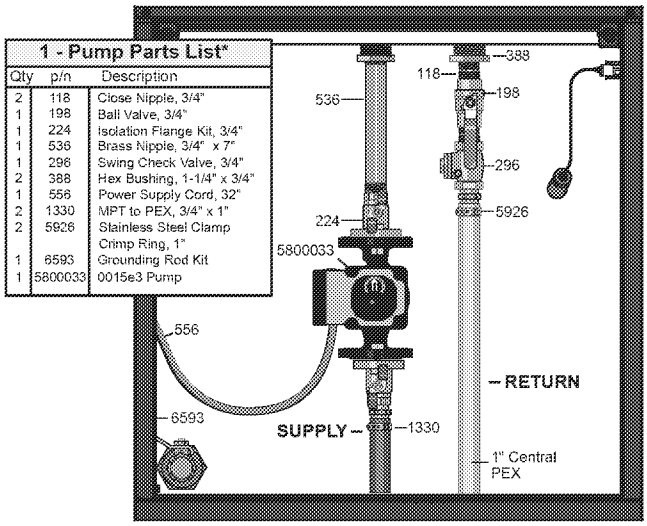

1 - Pump Parts List*		
Qty	p/n	Description
2	118	Close Nipple, 3/4"
1	198	Ball Valve, 3/4"
1	224	Isolation Flange Kit, 3/4"
1	536	Brass Nipple, 3/4" x 7"
1	296	Swing Check Valve, 3/4"
2	388	Hex Bushing, 1-1/4" x 3/4"
1	556	Power Supply Cord, 32"
2	1330	MPT to PEX, 3/4" x 1"
2	5926	Stainless Steel Clamp Crimp Ring, 1"
1	6593	Grounding Rod Kit
1	5800033	0015e3 Pump

*Parts and accessories sold separately.
Pump size may vary.
For illustration purposes only.

NOTE
Grounding Rod Kit (p/n 6593) must be installed with every furnace.

Classic Edge 360 Models – 2-Pump Configuration*

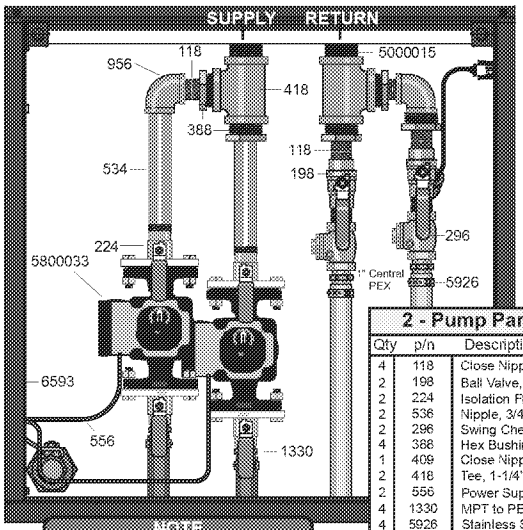

2 - Pump Parts List*		
Qty	p/n	Description
4	118	Close Nipple, 3/4"
2	198	Ball Valve, 3/4"
2	224	Isolation Flange Kits, 3/4"
2	536	Nipple, 3/4" x 7"
2	296	Swing Check Valve, 3/4"
4	388	Hex Bushing, 1-1/4" x 3/4"
1	409	Close Nipple, 1-1/4"
2	418	Tee, 1-1/4"
2	556	Power Supply Cord, 32"
4	1330	MPT to PEX, 3/4" x 1"
4	5926	Stainless Steel Clamp Crimp Ring, 1"
1	6593	Grounding Rod Kit
1	11157	Nipple, 1-1/4" x 3"
2	5000015	Nipple, 1-1/4" x 2-1/2"
2	5000016	90° Elbow, 1-1/4" FPT
2	5800033	0015e3 Pump

NOTE
Grounding Rod Kit (p/n 6593) must be installed with every furnace.

*Parts and accessories sold separately.
Pump size may vary. For illustration purposes only.

***Pump Extension Kit (p/n 2500164) required.**

Ground Rod Kit

The outdoor furnace must be electrically bonded to ground in accordance with the requirements of the authority having jurisdiction or, in absence of such requirements, with the National Electrical Code, ANSI/NFPA 70 and/or the Canadian Electrical Code Part 1, CSA C22.1 Electrical Code.

Install a Ground Rod Kit (p/n 6593) and connect it to the outdoor furnace.

1. In the water line trench near the outdoor furnace, drive the ground rod into the ground until the top of the ground rod is below the ground surface.
2. Route the ground wire from the ground rod under the outdoor furnace base and over to the frame of the outdoor furnace.
3. Secure the ground terminal with a cap screw (1/4" x 3/4"), star washer and nut. Secure the ground wire to the terminal; then secure the ground wire to the ground rod with the clamp. Tighten all hardware securely.

Detailed Furnace Installation Variations

Visit CentralBoiler.com to access a library of detailed illustrations for connecting to a wide variety of existing heating systems and for other heating options.

NOTE: A hole for the ground terminal has been pre-punched in the outdoor furnace base near the pumps.

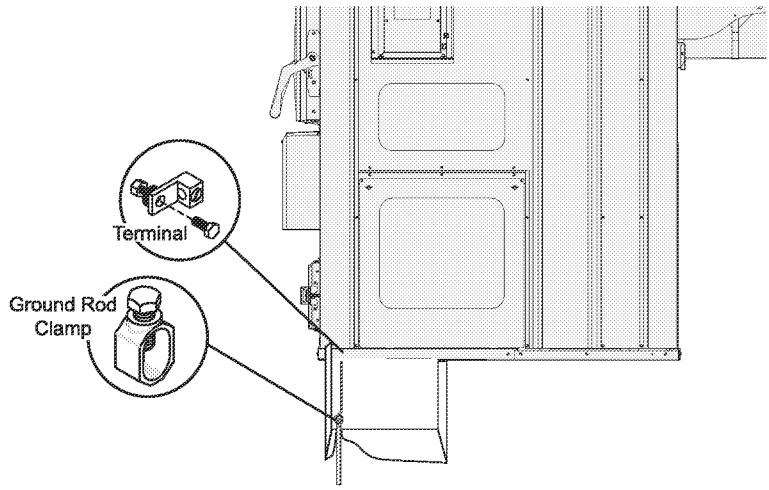

Furnace Installation - Connecting to Your Existing System

A common installation is to connect the outdoor furnace to an existing water heater and then to an existing forced air system. A water-to-air heat exchanger is mounted in the plenum or duct work of the existing furnace. Heated water from the outdoor furnace either continuously flows through the water-to-air heat exchanger or is diverted through a 3-way zone valve. When the thermostat senses the need for heat, the fan on the existing furnace forces air through the heat exchanger, transferring heat throughout the existing ductwork.

NOTE: There are numerous ways to connect to your heating system. Refer to the Central Boiler Outdoor Furnace Installation Guide for other installations.

Typical Installation

Connecting to Water Heater and Forced Air Furnace

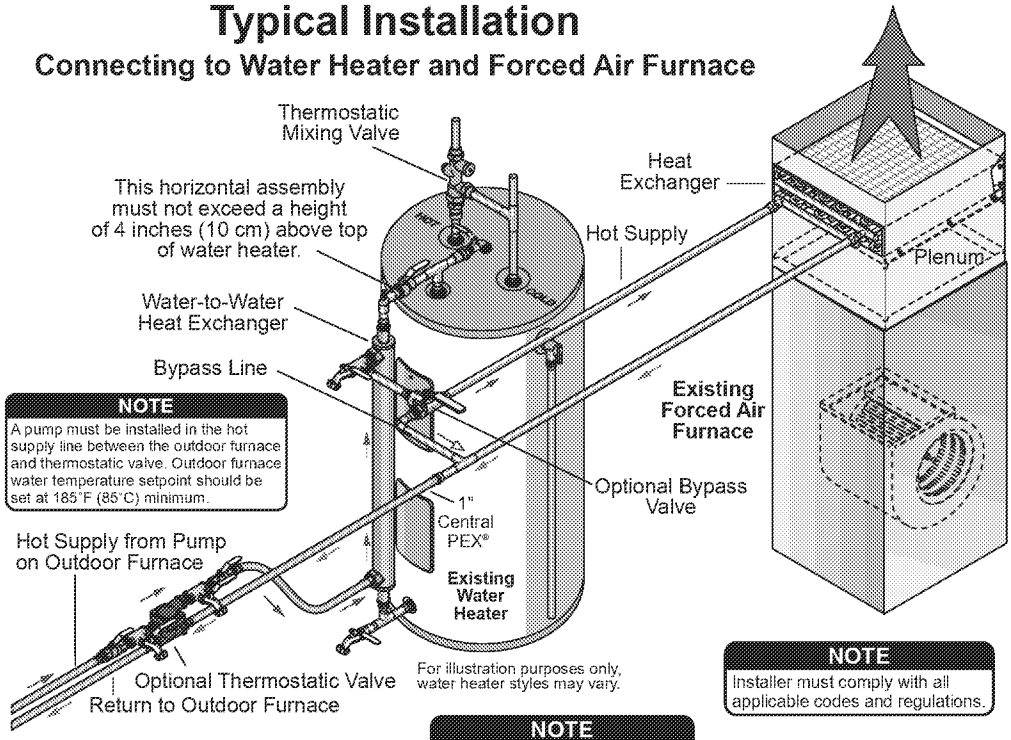

NOTE
A pump must be installed in the hot supply line between the outdoor furnace and thermostatic valve. Outdoor furnace water temperature setpoint should be set at 185°F (85°C) minimum.

NOTE
Installer must comply with all applicable codes and regulations.

NOTE: A certified electrician must do the electrical installation.

NOTE
Any electrical installation should be done by a qualified installer in accordance with applicable codes.

© 2014 Central Boiler

Remote Thermal Storage Installation

Connecting to Remote Thermal Storage Tank

NOTE
Installer must comply with all applicable codes and regulations.

For illustration purposes only; system components may vary.

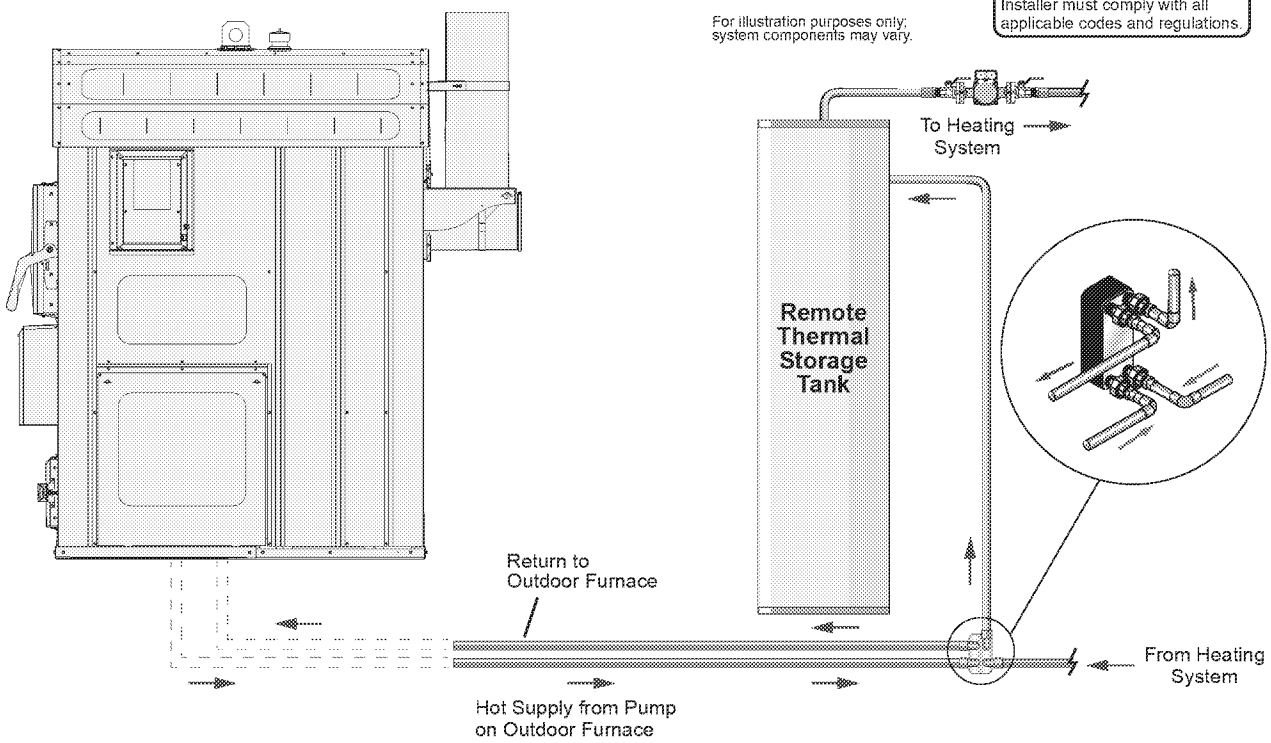

Outdoor Wood Furnace Best Burn Practices

1. Read and follow all operating instructions supplied by the manufacturer.
2. FUEL USED: Only those listed fuels recommended by the manufacturer of your unit. Never use the following: trash, plastics, gasoline, rubber, naphtha, household garbage, material treated with petroleum products (particle board, railroad ties and pressure treated wood), leaves, paper products, and cardboard.
3. LOADING FUEL: For a more efficient burn, pay careful attention to loading times and amounts. Follow the manufacturer's written instructions for recommended loading times and amounts.
4. STARTERS: Do not use lighter fluids, gasoline, or chemicals.
5. CHIMNEY RECOMMENDATIONS: In higher populated areas, extend the chimney to a height above the roofs of surrounding buildings.
6. Always remember to comply with all applicable state and local codes.

Be considerate of neighbors when operating your furnace. If you use your furnace in the summer months, be certain your chimney exhaust is not adversely affecting neighbors with open windows.

Chimney Recommendations

In higher populated areas, extend the chimney to a height above the roofs of surrounding buildings. Use Central Boiler Chimney Extensions when extending the chimney. When only the standard eight feet (2.4 m) of chimney are used, the sections must be secured at the connection joint with four (4) screws to stabilize the extension.

Chimney Installation

NOTE: Instructions for installing chimney sections and the chimney brace assembly are also provided with the furnace.

1. Remove the two slotted hex screws securing the Chimney Slide to the Chimney Support.
2. Remove the six self-tapping screws from the slot in the Chimney Brace Support. These screws are used to assemble the chimney sections.
3. Remove the single slotted hex screw securing the Chimney Strap to the Chimney Brace Support.
4. Install the rope seal at the bottom of the first chimney section; then assemble the chimney as shown.
5. Mount the Chimney Slide to the Chimney Support with two slotted hex screws. Do not tighten completely to allow the Chimney Slide to move.
6. Level the chimney front to back; then position the Chimney Slide against the chimney and completely tighten the two slotted hex screws.
7. Wrap the Chimney Strap around the chimney and secure with a slotted hex screw.
8. Secure the base of the chimney and the joint between the first two chimney sections with three self-tapping screws.

Chimney Section Installation and Chimney Brace Assembly

Illustration for reference only.
Refer to instructions provided with furnace for more information.

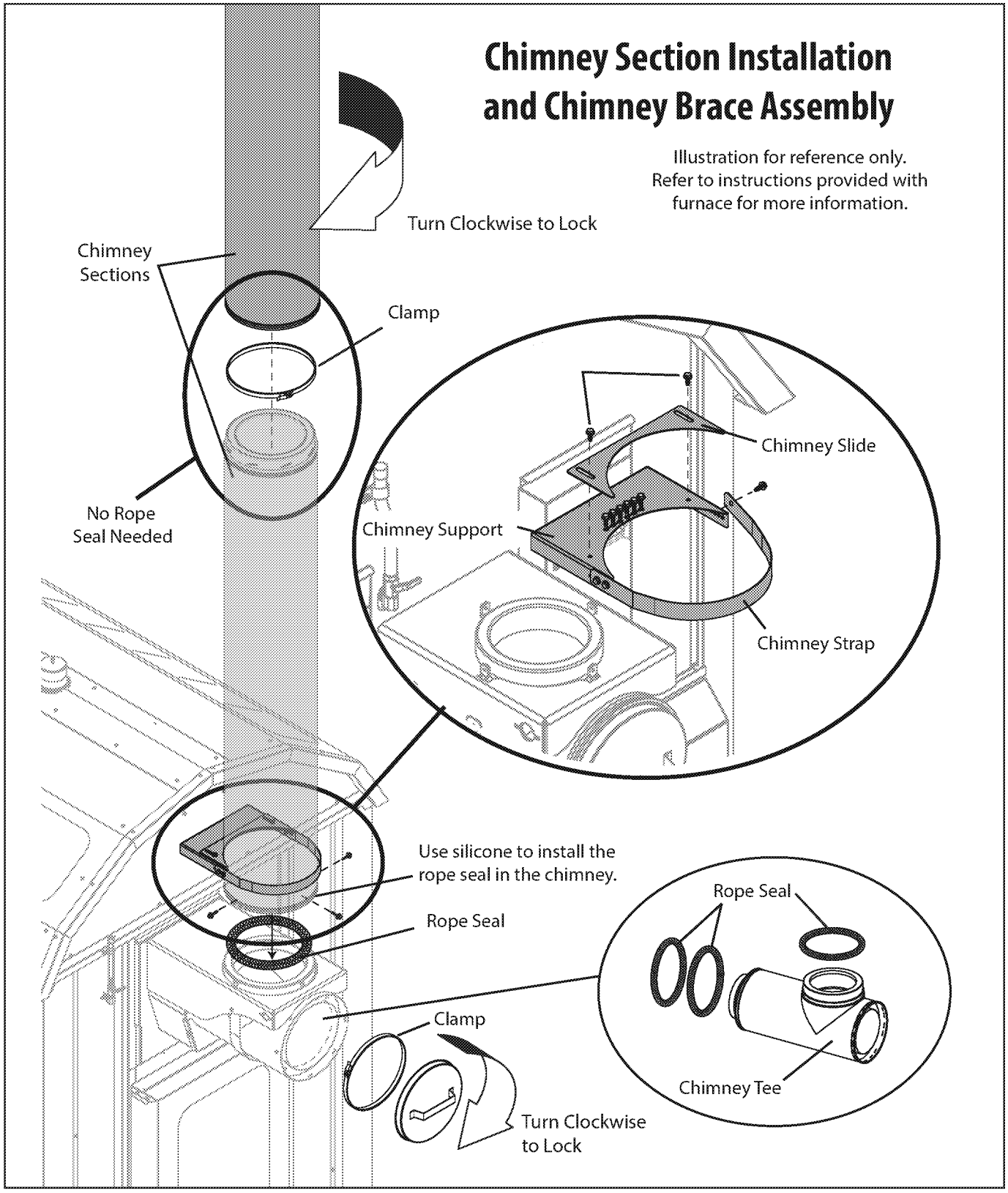

If extensions are added to the standard eight feet (2.4 m) of chimney, the chimney should be reinforced appropriately. The illustration shows chimney support recommendations when three or more sections are used. When adding sections of chimney, make sure that there is nothing within the fall zone of the chimney that could be damaged. If something is located within the fall zone and cannot be removed, guy wires or braces may need to be installed to prevent a falling chimney from causing damage.

NOTE: If more than three 4-foot (1.2-m) sections of chimney are used, a support (e.g., a pole, pipe or other structural support) may be installed from the ground that can withstand wind. Other reinforcement recommendations are shown.

NOTE: For chimney extensions or chimney replacement, use only genuine Central Boiler chimney components. Parts are available from an authorized Central Boiler dealer.

The installation of a spark arrestor is recommended, particularly where there are dry conditions or where there is combustible material near the unit, unless the installation of a spark arrestor is prohibited by local requirements.

NOTE: If the screen is left on the chimney cap, the spark arrestor should be inspected and cleaned as needed.

Use common sense to avoid potential fires, including exercising caution when disposing of ashes, cleaning and refueling. Keep all highly combustible materials (e.g., gasoline, propane, leaves, pine needles, etc.) away from an operating unit at all times. Take special precautions in windy conditions.

NOTE: You may need to increase the chimney height if conditions occur that force exhaust to low levels.

Chimney Reinforcement Recommendations

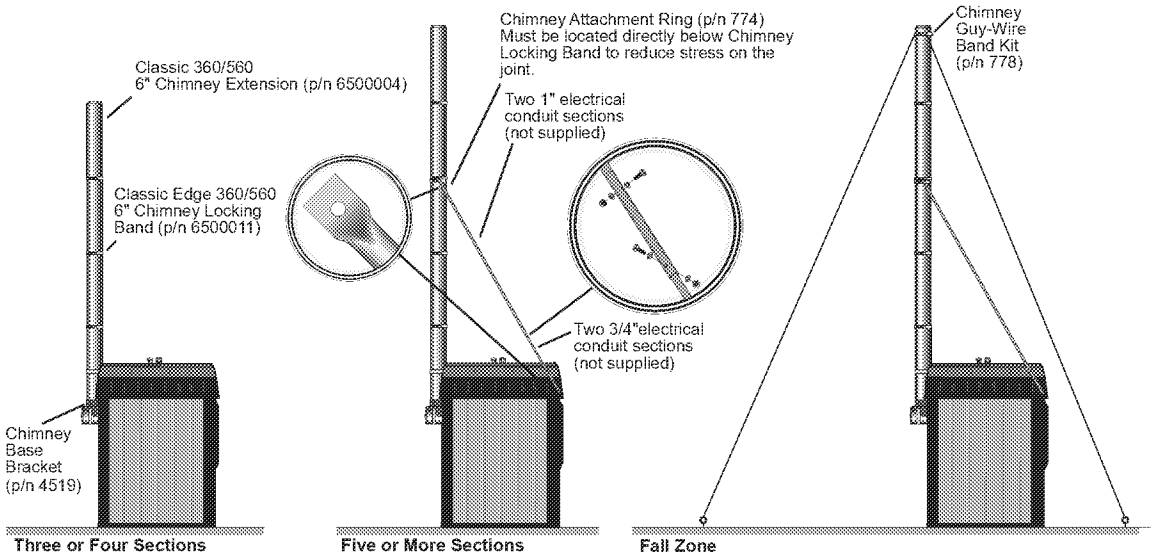

Three or Four Sections
When three or four sections of chimney are being used, a Chimney Base Bracket Kit (p/n 4519) is recommended.

Five or More Sections
When five or more sections of chimney are being used, a Chimney Base Bracket Kit (p/n 4519) and a Chimney Attachment Ring (p/n 774) are recommended.

Fall Zone
If objects are placed in the fall zone of the chimney, a Chimney Guy-Wire Band Kit (p/n 778) or additional bracing is recommended.

NOTE
- Additional bracing may be necessary in certain areas such as those subject to severe weather, winds, freezing rain, etc.
- Inspect all bracing bi-annually for integrity.

WATER QUALITY AND MAINTENANCE

INITIAL WATER TREATMENT, FILL AND TESTING

SEE HOW IT'S DONE
CentralBoiler.com > Support

The Installation and Initial Water Treatment Guide provided with the furnace provides step-by-step instructions for finalizing the installation which includes important information about adding water treatment and filling the outdoor furnace system for the first time (or any time the system has been completely drained and needs to be refilled). Refer to Finalizing the Installation.

Use the following information for your outdoor furnace model:

INITIAL 1650XL INHIBITOR PLUS TREATMENT AMOUNTS	
Classic Edge 360	1 unit

NOTE: If the system has a larger than normal water capacity, more 1650XL Inhibitor Plus should be added at a recommended rate of 7 oz. (207 ml) per 10 gallons (37.8 liters) of system water. One unit (1 gallon or 3.78 liters) of 1650XL Inhibitor Plus will treat 180 gallons (681 liters) of system water.

INITIAL MOLYBOOST TREATMENT AMOUNTS	
Classic Edge 360	15 oz.

NOTE: If the system has a larger than normal water capacity, more MolyBoost should be added at a recommended rate of 1 oz. (29.6 ml) per 10 gallons (37.8 liters) of system water.

NOTE: Remember that for Titanium Series stainless steel models, water treatment with 1650XL and MolyBoost is required. For non-stainless models, MolyBoost is optional.

NOTE: MolyBoost is an additive that enhances the corrosion protection properties of 1650XL Inhibitor Plus. When used with 1650XL Inhibitor Plus, it provides more protection than using 1650XL separately. MolyBoost does not provide adequate protection alone without 1650XL.

Titanium Series Models - Water Samples

Maintaining the corrosion inhibitor at a proper level is imperative to preventing corrosion failures. To qualify for the 25 year warranty, you must follow the instructions in the Owner's Manual and the Installation and Initial Water Treatment Guide concerning initial water treatment and maintenance. When the outdoor furnace is initially put into service, and once a year after that, you are required to submit a water sample to confirm proper maintenance and water treatment (see When to Submit Water Sample for more information). No warranty claim can be approved unless the outdoor furnace registration and the required water tests verifications are on file at Central Boiler.

NOTE: It is your responsibility as owner to ensure that your water sample information is accurate and that you submit your samples on a timely basis as required by the warranty for your stainless steel outdoor furnace. Failure to do so will result in a one year warranty.

Water Sample Kit

Your owner's packet contains a Water Sample Kit for submitting an initial water test. Additional Water Samples Kits are available from your Central Boiler dealer.

When to Submit Water Sample

INITIAL WATER SAMPLE: You are required to submit an initial water sample within 30 days of purchase of your outdoor furnace. EXCEPTION: if your outdoor furnace is not being installed within 30 days of purchase, you must email Central Boiler (service@centralboiler.com) with an estimated installation date, your name and your furnace serial number. When the furnace installation is complete, send the water sample **within 10 days of the initial fill**.

ANNUAL WATER SAMPLE: You are required to submit a water sample yearly prior to the anniversary date of your initial installation. Record the anniversary date below:

_____

DATE OF INSTALLATION

TO CHECK STATUS OF YOUR WATER SAMPLE: Check the status of your water sample at:

CentralBoiler.com/w25

You will need your serial number and postal code. Please allow 2-3 weeks for results to be available.

SYSTEM MAINTENANCE

An important part of outdoor furnace maintenance is controlling the quality of the water in the outdoor furnace.

Water Test Kits and Test Results

DATE	pH LEVEL	NITRITE LEVEL

Record the results of pH and nitrite level tests in the table above.
If additional space is needed, record on a separate sheet of paper.

It is very important to keep record of water test results (include the date, pH and nitrite level). If subsequent water tests indicate a pH that is too low and/or a nitrite level that is too high, the results should be verified using a new test kit.

The pH test strips and indicator have a varying shelf life that can affect their accuracy. Test kits should be stored in a dry area at room temperature to obtain maximum accuracy over a longer period of time.

The pH and nitrite levels of the water in the outdoor furnace will not decrease unless fresh water is added to the furnace and/or biological contamination is introduced. Biological contamination can occur if the furnace is not heated up to 185°F immediately after filling it with inhibitor and water as directed. The nitrite level of the water in the outdoor furnace will not increase unless 1650XL Inhibitor Plus is added. For example, if a water test in the fall of the year indicates a pH of 8.5 and a nitrite level of 2000 ppm and no water or 1650XL Inhibitor Plus is added, a water test the following spring must indicate a pH of at least 8.5 and a nitrite level of no more than 2000 ppm (or slightly less, due to evaporation).

NOTE: ANY time water is added to the system, it is extremely important to bring the water temperature up to operating temperature (185°F) as soon as possible, even if it is during the off-season. Failure to bring the water in the system up to operating temperature immediately after filling the system can allow bacteria present in the water to multiply and prevent the 1650XL Inhibitor Plus from providing adequate protection.

If the test indicates a significantly lower pH level or higher nitrite level, perform another test with a new test kit to verify the results. If the results are +10% different using a new test kit, it is an indication that either water or 1650XL Inhibitor Plus has been added to the system.

If a test is conducted and verified that indicates a high pH (above 9.5) and/or nitrite level (above 30 drops), DO NOT ADD MORE 1650XL INHIBITOR PLUS. Adding 1650XL Inhibitor Plus increases nitrite and pH levels. Use the following steps to obtain the correct nitrite and pH levels:

1. Drain the outdoor furnace until the water in the sight gauge reaches the bottom of the sight gauge; then add fresh water until it is 1 inch below the FULL mark on the sight gauge.
2. Circulate the water for 30 minutes. Test the water again and, if needed, add 1650XL Inhibitor Plus.
3. Bring the water temperature up to operating temperature (185°F), circulate for 24 hours and test the system water again.

POST HEATING SEASON MAINTENANCE

The water should be left in the outdoor furnace if the outdoor furnace is not being used for an extended period of time.

1. Refer to the Preventive Maintenance Schedule for a list of operations to perform.
2. Shut off the power supply to the outdoor furnace.
3. Place a cover over the chimney to keep rain from entering the outdoor furnace. Clean and oil the chimney flue to the firebox.
4. To prevent condensation in the firebox, one option is to keep a 60W light bulb on in the firebox during the non-heating season.

Flushing the System

If the system water is brown or orange, it is an indication that the 1650XL Inhibitor Plus level has not been maintained and corrosion is present in the water jacket. Sludge Conditioner (p/n 166 or 1660) can be used by circulating the recommended amount through the furnace **for one week** to help clean some of the corrosion from inside the water jacket before flushing and refilling.

Recommended amounts are:

Classic Edge 360, 1/2 unit

NOTE: 1 unit = 1/2 gallon if using p/n 1660 or 1 unit = 1 gallon if using p/n 166. Use one unit of Sludge Conditioner per 200 gallons of system water.

Draining Treated System Water

1650XL Inhibitor Plus is composed of common materials and is biodegradable. However, in keeping with good safety and environmental practices, the supplier recommends the following if draining treated system water becomes necessary:

You may drain the outdoor furnace to a home septic system. Central Boiler 1650XL Inhibitor Plus is biodegradable and can be properly treated in a residential septic system. If doing so, however, be careful not to overflow the septic system.

Do not drain the outdoor furnace in such a manner that the drain water could in any way contact surface water, stream, river, estuary (where a river meets a sea), lake, pond, ocean or other types of waters.

Do not drain to any location within 50 feet (15 meters) of any water well.

The water jacket should then be thoroughly flushed and the system refilled with the proper amount of 1650XL Inhibitor Plus and Molyboost added (see following section). Be sure to test the system water to verify the proper amount of 1650XL Inhibitor Plus.

1. De-energize the pump(s) and close the supply and return valves on the outdoor furnace. Remove the inspection panel and insulation covering the drain to gain access to the drain valve. Remove the cap and connect a hose to the drain.

2. Open the drain to drain the system; then flush the top of the firebox and bottom of the water jacket beneath the firebox using a wand placed in the vent.

⚠ CAUTION

Completely clean out the firebox before draining water from the outdoor furnace.

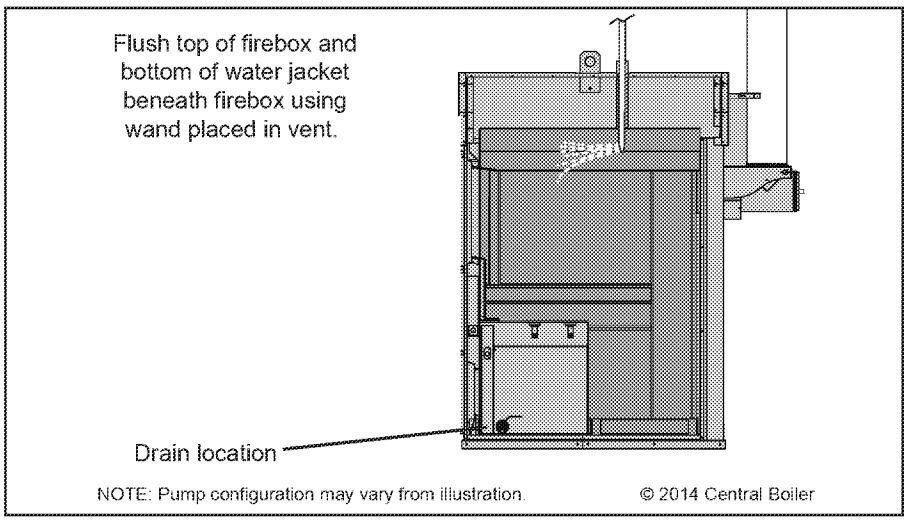

3. Close the drain valve securely and replace the cap on drain after flushing the outdoor furnace.

4. Add 1650XL Inhibitor Plus and Molyboost.

5. Fill the outdoor furnace following the procedure in Finalizing the Installation in the Installation Guide. Start the pump(s) and bring the water temperature up to operating temperature (185˚F) for two hours with the system circulating to thoroughly mix the 1650XL Inhibitor Plus.

NOTE: ANY time water is added to the system, it is extremely important to bring the water temperature up to operating temperature (185˚F) as soon as possible, even if it is during the off-season. Failure to bring the water in the system up to operating temperature immediately after filling the system can allow bacteria present in the water to multiply and prevent the 1650XL Inhibitor Plus from providing adequate protection.

6. Insulate the area using a mat of fiberglass insulation.

7. Install the inspection panel and secure with self-tapping screws.

Wood Selection and Preparation

Before You Start Operating Your Classic Edge Outdoor Wood Furnace

Be sure to read carefully and observe all of the information in the entire Owner's Manual.

If any questions arise that cannot be answered by the information in this manual, be sure to contact your dealer.

For the best results, it is best to burn seasoned split wood. However, it may be possible to burn some unsplit wood with the split wood depending on quality, size, moisture content and wood type. Properly seasoned wood has a moisture content of 20% or less. It is darker, has cracks in the end grain, and sounds hollow when smacked against another piece of wood. Most wood needs to be split to dry down to 20% within a year. Wood between 4" and 8" (10 and 20 cm) in diameter works well in most cases. Pieces of wood that are too large can reduce output capacity because they burn slower.

- Wood that works well in most cases:
  - Is between 4" and 8" (10 and 20 cm) in diameter
  - Is approximately 60-70% of the length of the firebox
  - Typically weighs 10-15 pounds per cubic foot for heavy heat loads
- Pieces of wood that are too large can reduce output capacity because they burn slower. Wood that is too long can cause bridging.
- Seasoned wood burns more efficiently, minimizes the amount of creosote formation and reduces emissions.
- Maintain a quantity of smaller, drier pieces of wood for relighting the fire if the wood load is burned very low or becomes completely empty.
- Green wood contains about 50% moisture by weight. Energy is required to heat the wood and evaporate the moisture - energy which could have been used to provide heat for the home. The illustration below shows that burning drier, seasoned wood provides more energy for heating your home compared with burning green, unseasoned wood that uses more energy to evaporate the moisture and provides less energy for heating your home.

NOTE: Do not store wood within the outdoor furnace installation clearances or within the spaces required for fueling, ash removal and other routine maintenance operations.

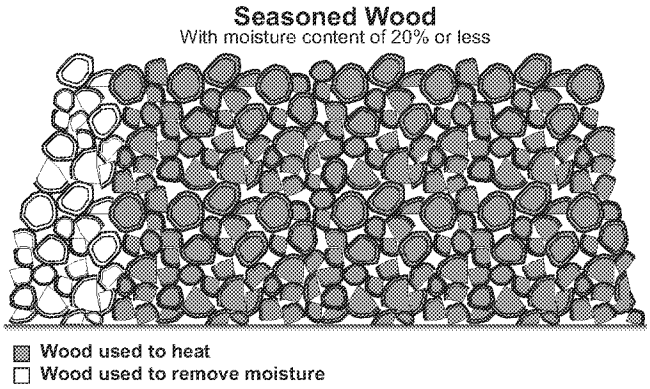

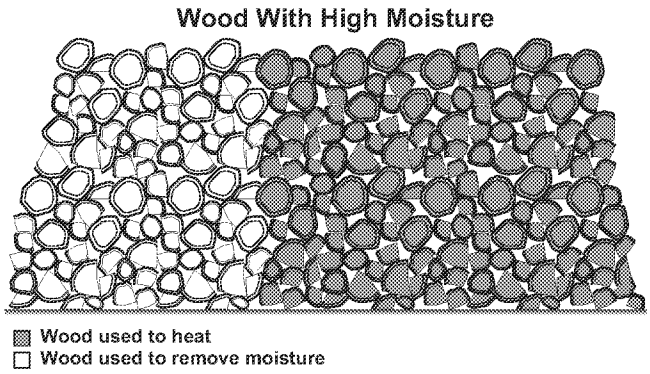

Operating Instructions

FIRESTAR COMBUSTION CONTROLLER

Refer to the FireStar Combustion Controller Operation Manual for information about the combustion controller.

How the Classic Edge Works

Because of its highly efficient and clean-burning design, the Classic Edge operates differently than other types of wood-burning devices. Understanding a few basic principles will help you operate the Classic Edge as it was designed, maximizing its performance, heat transfer and longevity.

NOTE: For proper operation, the fuel must match the heat load, the furnace must be maintained to ensure proper air flow, and the water temperature must be kept above 150˚F (66˚C).

1. The combustion air fan pressurizes the airbox located at the front of the outdoor furnace. Primary air flow, regulated by an actuator motor, flows into the firebox through combustion air outlets located on the front and sides near the bottom. Secondary air is regulated by a second actuator motor that allow air flow through the air charge tube. Combustion starts in the firebox near the bottom of the wood load.

Operating with Properly Seasoned Wood

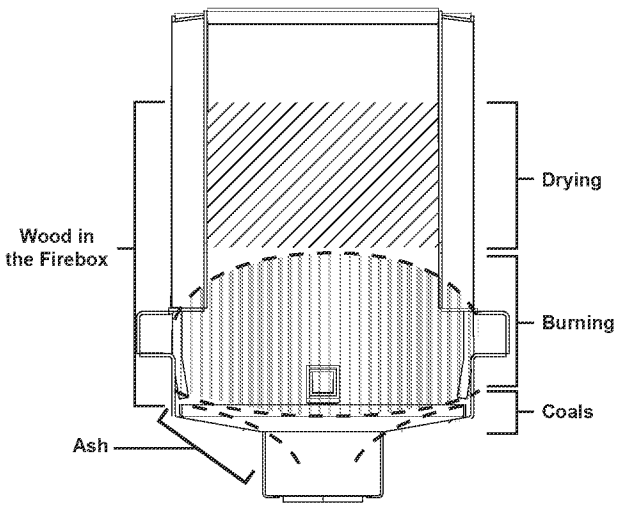

- Burns more efficiently
- Minimizes amount of wood used
- Reduces emissions
- Extends life of furnace
- Reduces bridging

Operating with Wood with Too Much Moisture

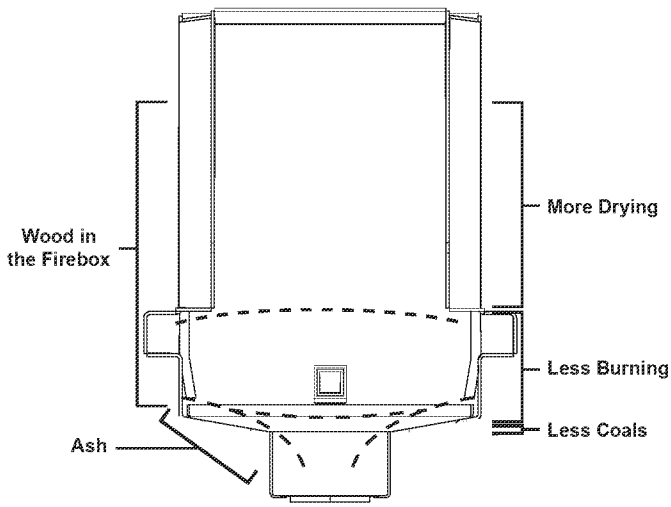

- Burns less efficiently
- Increases amount of wood used
- Lowers combustion rates
- Increases maintenance requirements
- Increases bridging

NOTE: When the volume of burning wood is greater than the volume of drying wood, the outdoor furnace operates more efficiently.

© 2019 Central Boiler

NOTE: The combustion air outlets must be visible (i.e., ash must be kept below the combustion air outlets as shown).

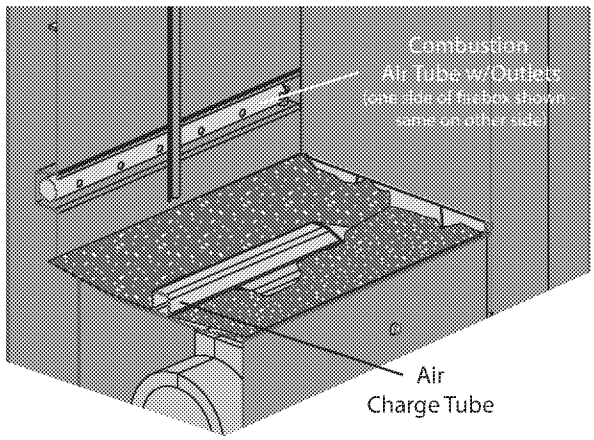

Keep the combustion air tube outlets open and clear of ash and coals to allow the furnace to operate properly.

2. Gasified fuel exits the bottom of the firebox alongside and under the air charge tube, through the mixing channel and down to the Fusion Combustor and Reaction Chamber™. Final combustion occurs in the Reaction Chamber where extremely high temperatures aid in complete combustion. The chimney creates a draft (negative pressure) which helps to draw exhaust gases from the furnace.

3. Heat is transferred to the water from the hot gases as they move through the firebox, the Reaction Chamber and the heat exchanger.

CORRECT
(Proper Flow)

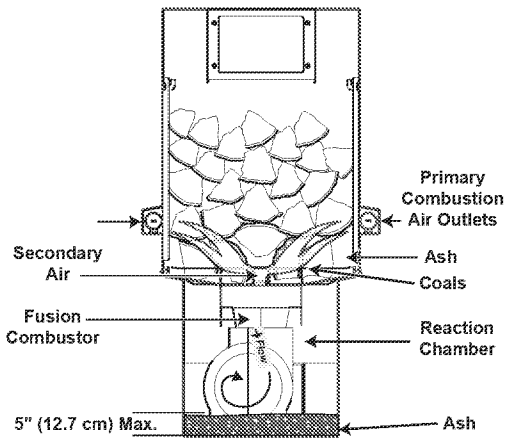

Front View

NOTE: The illustration shows the Classic Edge operating correctly with proper combustion air flow and with the wood properly loaded.

NOTE: A key point to remember about the operation of the Classic Edge is that as wood burns, the combustion gases flow down through the bottom of the firebox so the proper flow must be maintained as shown.

NOTE: Refer to the General Troubleshooting Information for more information on outdoor furnace operation and for conditions to avoid.

Cold Start Firing

NOTE: These procedures apply to initial firing or refueling the outdoor furnace from a cold start (water temperature below 100˚F or 38˚C) and/or no charcoal base left in the firebox).

Use small, dry kindling to establish a good fire on initial or cold startups.

⚠ CAUTION

Do not burn plastic, garbage, treated wood or fuels not listed for this outdoor furnace.

⚠ CAUTION

If the water in the outdoor furnace boils, be sure to check the water level and restore to full. Add 1650XL Inhibitor Plus (p/n 1650) as needed (see Water Quality and Maintenance).

NOTE: Before firing the outdoor furnace for the first time, make sure the proper amount of 1650XL Inhibitor Plus has been added and the water level is 1" below the full mark on the sight gauge, as the water will expand when heated.

1. Disconnect the heat load draw by turning off the pump(s).
2. Turn the controller on by pressing the **Power** button.

⚠ WARNING

When opening the firebox door, the door switch will shut off the primary air actuator motor while the firebox door is open. Do NOT disable the door switch.

3. The first time you fire the outdoor furnace, add very dry kindling to fill the firebox to a level approximately 15 inches (38 cm) from the bottom of the firebox. Smaller kindling is preferred. It should be staggered and able to ignite and burn quickly for the initial fire.

NOTE: For Ignition Assist, press the Ignition Air button on the FireStar combustion controller with the firebox door open to add air and help ignite a new load of wood.

4. To get the cleanest start-up, the kindling must first start to burn at the bottom and as close to center as possible. Place paper around the firebox with very small pieces of kindling on top. Light the paper and kindling. Once the paper and kindling are lit, close and latch the firebox door.

⚠ CAUTION

Do not leave the firebox door open while the fire is burning. Damage to the door seal and paint on the front of the outdoor furnace will result and it could cause a dangerous build-up of gas in the firebox.

Cold Start Initial Fire Up

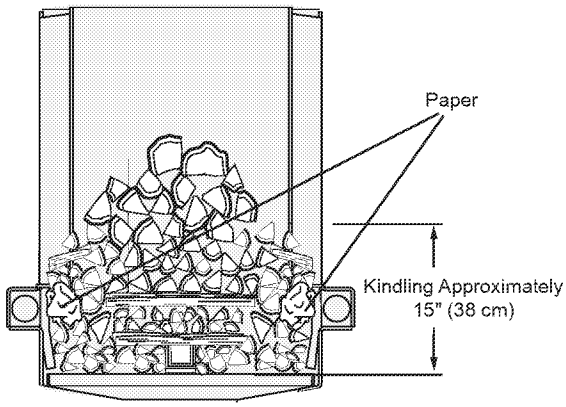

© 2019 Central Boiler

5. Allow the wood load to burn until the kindling turns to coals; then add enough kindling again to fill the firebox about 1/4 full. On top of the kindling, add 8-10 inches (20-25 cm) of dry, seasoned split wood. Close and latch the firebox door.

6. After the water temperature is above 150°F (66°C), proceed to Adding Heat Load.

Adding Heat Load

NOTE: During initial start-up, a considerable amount of moisture from condensation will collect inside the firebox and heat exchanger and may drip out of the Reaction Chamber door. This is normal and the moisture will evaporate after the first couple of fuel loads.

1. With no heat load draw in the system, monitor the operation of the outdoor furnace until the water temperature reaches the water temperature setpoint.

2. Turn on the pump(s); then start a heat load draw in the system by turning up the thermostat in the house. Monitor the outdoor furnace for one hour or until another cycle occurs (i.e., outdoor furnace goes from combustion to idle mode). If the water temperature drops and does not recover to the water temperature setpoint within one hour of starting the heat load draw, the heat load draw should be shut off, allowing the furnace to cycle to the idle mode again.

NOTE: The outdoor furnace will not operate satisfactorily if the heat load is higher than the output capacity of the outdoor furnace.

3. At this point, there should be glowing coals established in the bottom of the firebox. The firebox can be filled with dry, seasoned split wood.

Ash Removal Frequency

During the first week of operation, check the level of ash in the Reaction Chamber every two days. Ash needs to be removed from the Reaction Chamber before it obstructs the combustion air flow for efficient operation. Clean the Reaction Chamber before it becomes 1/2 full of ash (approximately 5" or 13 cm deep in any area of the Reaction Chamber).

Adding Wood

1. Unlatch the firebox door; then slightly open the firebox door and wait 10 seconds. Stay as far away as possible as the firebox door is opened because smoke and hot gases escaping through the firebox door opening could ignite. From a safe distance, observe the fuel load.

⚠ WARNING

Keep your face away and stay as far away as possible from the firebox door area when opening the door.

⚠ WARNING

Use extreme care when adding wood when wood or coals are already present. Very hot gases may be coming out of the firebox door opening.

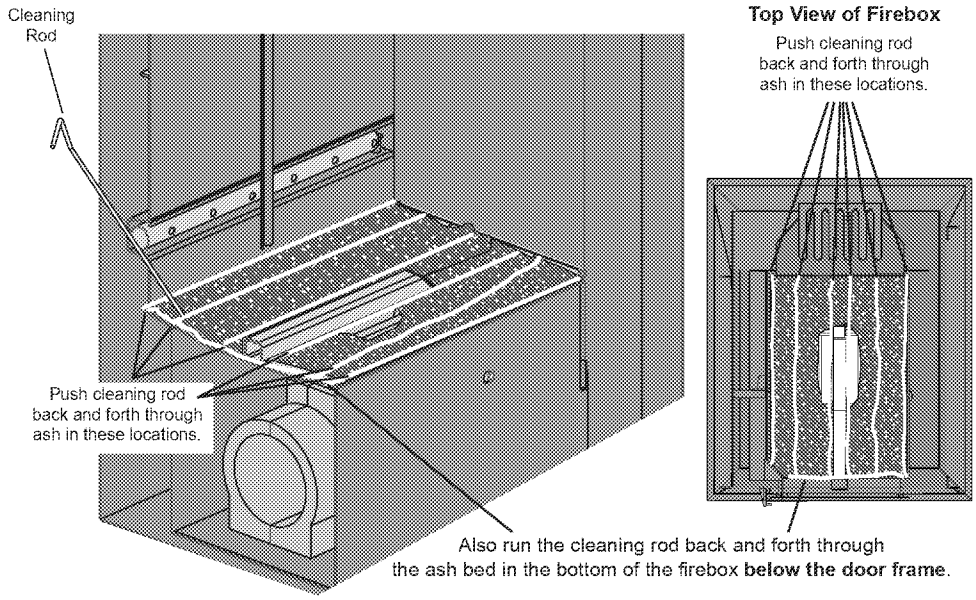

2. Using the illustration as a reference, push the cleaning rod through the ash, coals and remaining wood in the bottom of the firebox to loosen it up, including a pass on each side of the air charge tube. Also run the rod through the ash bed back and forth in the bottom of the firebox below the door frame.

NOTE: Neglecting to push the cleaning rod through the ash and coals as described in Step 3 each time before wood is loaded can cause the ash bed to deepen and become compacted. This can result in poor heat output and combustion because of restricted airflow. Compacted ash will not fall into the Reaction Chamber; it will need to be removed with a shovel.

OPERATING TIP

Run the cleaning rod through the coal bed every time before loading wood to help maintain proper air flow and optimize combustion.

3. Some ash in the bottom of the firebox (but not alongside the charge tube) is necessary for the proper operation of the outdoor furnace. Ash acts as an insulator, keeping the glowing coals in the bottom of the firebox hot enough to restart the fire. When using the cleaning rod, some of the ash will fall into the Reaction Chamber and some ash with coals will remain. The coals remaining around the mixing channel (the area alongside the air charge tube) will create a clean, efficient burn.

4. The combustion air outlets must be kept open and clear of ash and coals to allow the furnace to operate properly. If needed, remove enough ash to keep the combustion air outlets free of obstruction.

NOTE: It is important to understand that when the water temperature setpoint (185°F) is reached, the combustion air is shut off until the water temperature drops to the setpoint minus the differential setting. During this cycle-off time there will be no active fire in the firebox. If the firebox door is opened, the wood might begin to burn again but will be shut down when the door is closed if the water temperature is above the setpoint. If the door is opened and closed when the water temperature is below the setpoint the fan will cycle on again to achieve the setpoint even though the differential point has not been reached. If the combustion cycle is activated with the water temperature at least to the differential below setpoint and the fire is not actively burning when the door is closed, first confirm that proper operating and maintenance procedures are being performed before considering testing mechanical components.

5. When refilling the firebox, the new wood load will ignite quickly and burn more efficiently if these instructions are followed. This will prevent creosote buildup in the heat exchanger, air channels or primary elbow. The operating procedures will maintain good air flow and very efficient combustion.

DAILY

- Run the cleaning rod through the ash and coal bed and along both sides of the air charge tube as shown on previous page to keep ash loose. **Use care near the refractory mixing channel.** This will allow excess ash to flow down into the Reaction Chamber. If the coal bed/remaining wood is more than 4 inches deep, it may be necessary to use the cleaning rod to open a passage through the coals on each side of the air charge tube. **Air flow down past the air charge tube is essential for a good combustion rate to be maintained. To confirm adequate air flow, cautiously open the Reaction Chamber door to visually identify the combustion air flow while the furnace is in a burn cycle with the fan on.**

- To ensure the fire will maintain good combustion, it is important to refill the firebox when an adequate amount of the previous wood load is remaining (enough to provide enough heat and fire to dry and ignite the new wood load). If the coals burn out from under the new wood load and are unable to keep the fire going, there are not enough coals and wood left from the previous load. On Classic Edge Titanium HDX models with FireStar controller software version 6.7 or later, enabling the Easy Refire mode will help keep part of the wood load for a quicker, more efficient fire up after reloading. Easy Refire is enabled as default setting on version 6.72 and later.

- Be sure to fill the firebox with enough wood so there is adequate wood left the next time you load to dry and ignite the new wood.

- Keep in mind that burning dry, well-seasoned wood requires less coals to ignite the new wood load.

- Burning higher moisture wood or larger, unsplit wood will require that a larger amount of the previous wood load remain in the firebox to adequately ignite the new wood load. If there are not an adequate amount of coals or enough of the previous wood load to achieve a good hot fire and efficient combustion with Reaction Chamber temperatures, refer to Cold Start Firing.
- If the furnace is being used in the fall and spring or on heat loads much lower than the main heating season, use a 25% wood load or whatever amount will be needed for the period of time between normal reloading.

WEEKLY (or as needed)

- Clean the heat exchanger weekly (or as needed) to prevent air flow restriction. When the operating procedure outlined here is used, there will be no creosote formation in the Reaction Chamber or heat exchanger passage.
- Clean ash out of the Reaction Chamber channel as needed. It is best not to allow the Reaction Chamber to fill to a depth over 1/2 full.
- Inspect and clean the chimney tee as needed to prevent restriction.
- Clean and inspect the spark arrestor (if one is being used) as needed.
- Review the operation and maintenance, and refueling tips videos available on the Online Support Center.

NOTE: If the furnace has been operated without adequate airflow and efficient combustion, it may be necessary to inspect and clean the primary combustion air outlets, air channels, primary air elbow, heat exchanger, and Reaction Chamber.

NOTE: If the fire goes out or keeps going out, the pulse timer can be adjusted to a longer duration and shorter time periods between idle pulses.

⚠ WARNING

When adding wood to the firebox, be careful not to get pinched between the wood and the door frame or any part of the outdoor furnace. Use extreme care with large pieces of wood that may be difficult to handle.

7. Inspect the firebox for crusty deposits on the walls and in the corners and use the maintenance tool or similar type of tool to scrape and remove. Use the maintenance tool to remove any thick deposits from the inside front corners of the firebox, down each side and across the top, as shown.

8. Use the maintenance tool to keep the front combustion air outlets, and the combustion outlets on both air tubes free of any buildup.

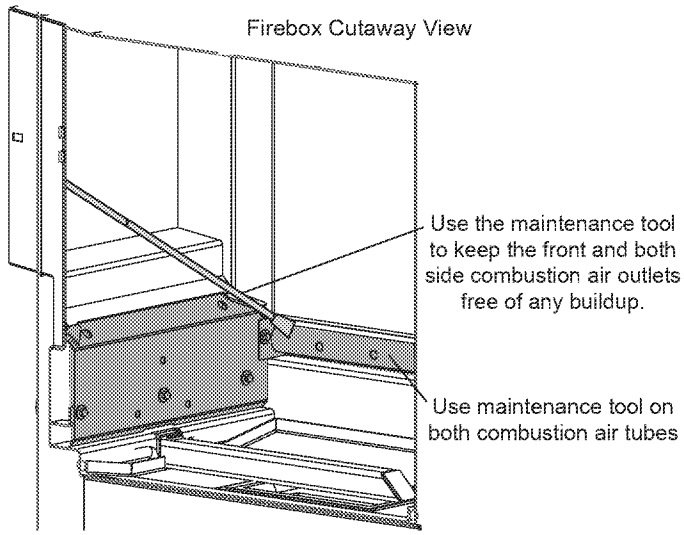

9. When loading, load the wood so that the combustion air outlets on the side of the firebox do not become blocked or restricted.

10. Close and latch the firebox door. **Do not use the firebox door to ram wood into the outdoor furnace. Do not operate the outdoor furnace with the firebox door open.** Combustion in the firebox cannot be controlled if the firebox door is left open or unlatched. If the firebox door is left open, an uncontrolled burn will result. To return to a controlled burn, close and latch the firebox door.

⚠ WARNING

The firebox door must be closed and latched at all times except when filling the firebox with wood or damage to gaskets, paint, etc., may occur. Leaving the firebox door open may lead to a runaway fire. In the event of a runaway fire, close the firebox door.

Maintenance Schedule

PREVENTIVE MAINTENANCE SCHEDULE

Regular maintenance and inspections can help extend the life of your outdoor furnace and prevent high-cost repairs. This table is meant to serve as a general guideline until you become acquainted with how the outdoor furnace operates with your specific application.

OPERATION	SERVICE INTERVAL: Before first operation of season	Daily	Weekly	Monthly	Semi-Annually	Post Season	Other	See Section Number
Check water level.	●	●						1
Remove ash.			C			●		3
Scrape firebox door frame; use cleaning rod in ash.		A				●		8
Inspect firebox door seal.		A				●		4
Inspect and lubricate door latch bushings.						●	G	4
Inspect chimney and chimney tee.	●		●			●		5
Check vent cap.	●							2
Clean heat exchangers.	●		C			●	F	6
Inspect rear access heat exchanger door latches, seal and insulation							H	6
Inspect Reaction Chamber and Fireball.	●		C			●		7
Inspect secondary air charge tube and refractory.						●		11
Inspect firebox and firebox ash area.	●	A				●		8
Inspect and clean combustion air outlets.	●		C			●	B	9
Inspect and clean the combustion fan and inlet screen.					D			10
Oil the combustion fan.						●		10
Check pH and nitrite levels of water.	●				D	●		E
Inspect primary and secondary combustion air elbows.						G		12
Perform a complete cleaning.				F		●		13

NOTE: Check daily for build-up of creosote in the lower corners and around the air outlets until experience shows how often cleaning is necessary.

- A Daily, or as needed.
- B Twice a week.
- C Weekly until interval for your application can be determined.
- D When new, after three months, then every six months thereafter.
- E Refer to **Testing Treated Water in the Outdoor Furnace** (Installation and Initial Water Treatment Guide).
- F Frequency will vary depending on heat load requirements, type of wood used and the moisture content of the wood.
- G Or as needed.
- H Whenever rear access heat exchanger door is opened.

Control Locations

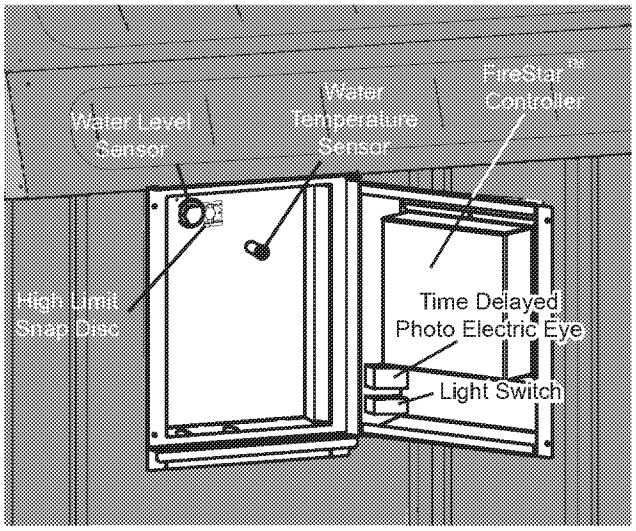

ROUTINE MAINTENANCE

⚠ CAUTION

Use only genuine Central Boiler Parts and Accessories if it ever becomes necessary to replace any component of the outdoor furnace.

Routine inspections and maintenance are essential to the proper operation and longevity of the outdoor furnace. The items indicated in the preventive maintenance schedule are intended to serve as a guideline. Actual intervals between inspections and maintenance may vary depending on a number of factors, including your heat load requirements, type of wood used, and outdoor temperatures.

NOTE: Proper maintenance of the firebox, Reaction Chamber, Fusion Combustor, heat exchanger, chimney transition box and chimney tee are essential for the outdoor furnace to function properly and for longevity.

⚠ CAUTION

Do not burn plastic, garbage, treated wood or fuels not listed for this outdoor furnace.

NOTE: Chloride or sulfurous gases can be generated if plastic or rubber is burned and will mix with the moisture from the wood to form hydrochloric or sulfuric acids in the firebox, creating corrosion.

Creosote - Formation and Need for Removal. When wood is burned slowly, it produces tar and other organic vapors, which combine with expelled moisture to form creosote. The creosote vapors condense in the relatively cool chimney flue of a slow-burning fire. As a result, creosote residue accumulates on the flue lining. When ignited this creosote makes an extremely hot fire.

NOTE: If the outdoor furnace is operated correctly, creosote will not form in the chimney.

The chimney connector and chimney should be inspected at least twice monthly during the heating season to determine if a creosote buildup has occurred, and to check for corrosion or condensation. If creosote has accumulated it should be removed to reduce the risk of a chimney fire.

⚠ WARNING

The chimney and chimney connector must be clean and in good condition.

MAINTENANCE SECTIONS

Refer to the Preventive Maintenance Schedule for the recommended intervals with which to perform these maintenance items.

Section 1 - Water Level

Open the sight gauge valve. The sight gauge tube will fill to indicate the level of water in the outdoor furnace. Be sure to close the sight gauge valve after checking water level. The sight gauge valve and tube will drain when the valve is closed.

Section 2 - Vent Cap

Check that the vent cap fits loosely on the vent opening. Check the vent cap copper tube for obstruction; clean with a pipe cleaner if needed.

⚠ WARNING

The outdoor furnace vent cap must fit loosely on the vent opening. Do not force the cap down or try to seal it tightly onto the vent pipe. Do not extend or restrict the vent pipe or opening. DO NOT ALLOW THE OUTDOOR FURNACE TO BE PRESSURIZED.

Section 3 - Ash

Refer to the Adding Wood section.

Section 4 - Firebox Door Seal and Bushings

Make sure the firebox door is properly latched and check the condition of the firebox door seal. If it is not sealing properly (indicated by a uniform indentation), replace the seal. If it is not sealing properly after replacing the seal, the firebox door may need to be adjusted. See Firebox Door Hinge/Latch Bearing Adjustment in Serviceable Items section.

Section 5 - Chimney Tee and Chimney

Remove the band clamp and chimney inspection cover. Inspect the chimney outlet and chimney for excessive creosote, ash or deposits and clean as necessary.

NOTE: The chimney inspection cover must fit tightly. Check and clean if necessary the groove for the cover to prevent air from leaking out. Leaking air caused by an improperly fitting cover can cause corrosion.

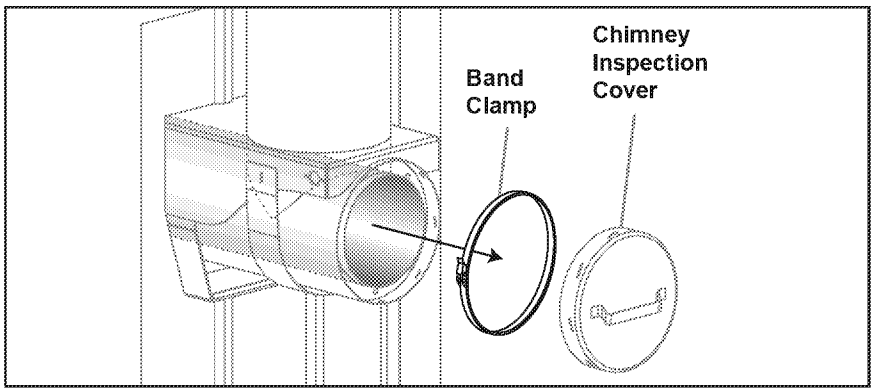

Section 6 - Heat Exchangers

NOTE: Inspect the heat exchangers weekly, and clean as needed, until the interval for your application can be determined. Frequency will vary depending on a number of factors including heat load requirements, type of wood used and the moisture content of the wood.

NOTE: The best time to clean the heat exchangers is prior to loading with wood when all that remains in the firebox is a glowing coal bed.

1. Press the **Power** button on the FireStar combustion controller to turn it off.

⚠ CAUTION

Be sure to turn off the FireStar combustion controller before doing this procedure.

2. Remove the chimney inspection cover. Inspect the area above the heat exchangers for any excessive ash buildup. Clean and remove any excessive ash accumulation.

3. Remove the heat exchanger access cover from the back of the furnace. Inspect the cover insulation and repair/replace as necessary.

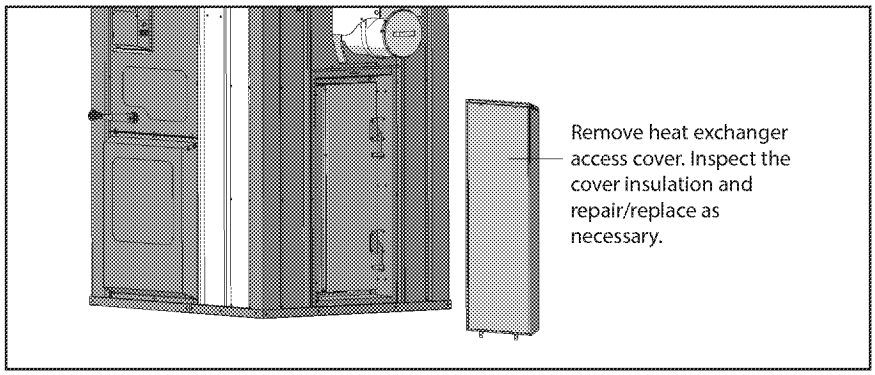

4. Carefully undo both latches on the hinged heat exchanger door. If any coals or wood remain in the firebox, slowly open the door making sure to stand off to the side when opening it.

⚠ CAUTION

Open the heat exchanger door slowly and stand off to the side when opening it.

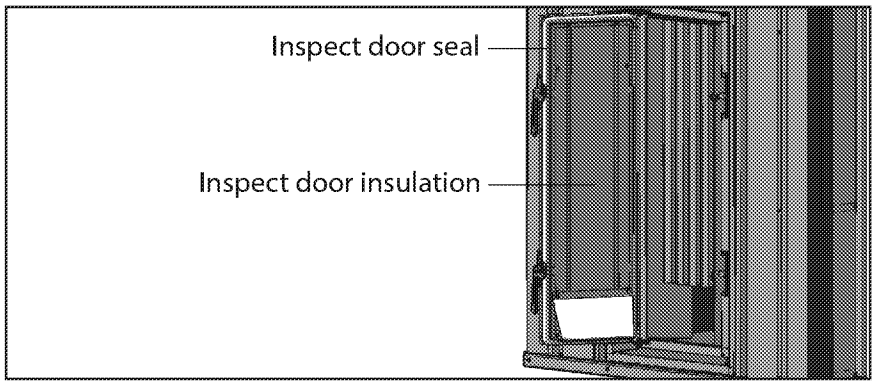

5. Inspect the door insulation and door seal. Repair/replace any defective seal or insulation.

6. Inspect the door frame edge for any buildup of creosote or ash. Use the maintenance tool to clean the door edges.

⚠ CAUTION

Always wear the appropriate personal protective gear when cleaning ash from the turbulators and the Reaction Chamber.

7. Remove each turbulator by gently pulling down and out. Clean each turbulator to remove any ash or buildup; then inspect for damage.

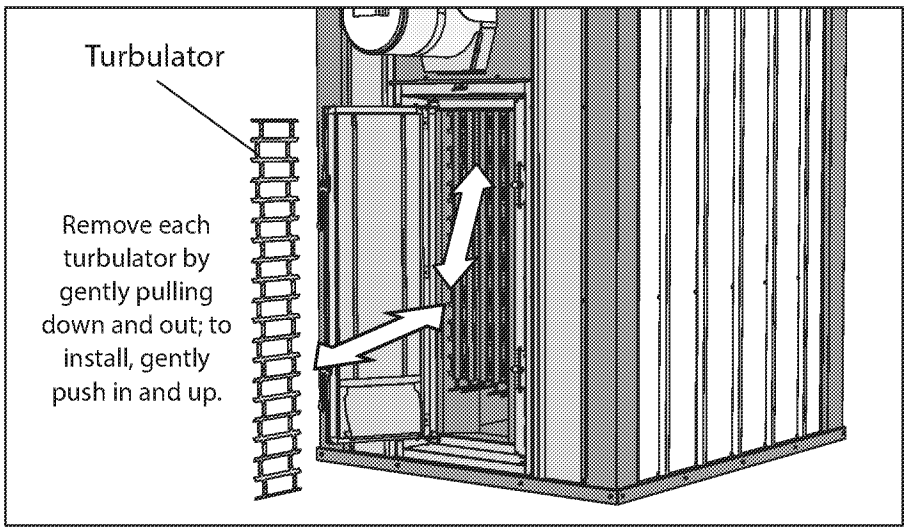

8. Inspect the heat exchangers for excessive buildup of creosote or ash. Use the scraping end of the maintenance tool to clean any accumulations from the sides of the heat exchanger sections. Angle the cleaning rod up to clean from the top of the exchangers and then down to the bottom between each folder of the exchanger.

The Flue Brush Kit (p/n 390) is an excellent option as an additional way to clean the exchangers.

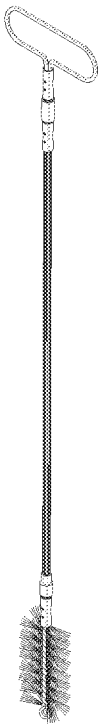

NOTE: If there is creosote buildup in the heat exchanger, it is caused by operating the furnace incorrectly. It is important to follow the recommended operation and maintenance procedures (see Operating Instructions).

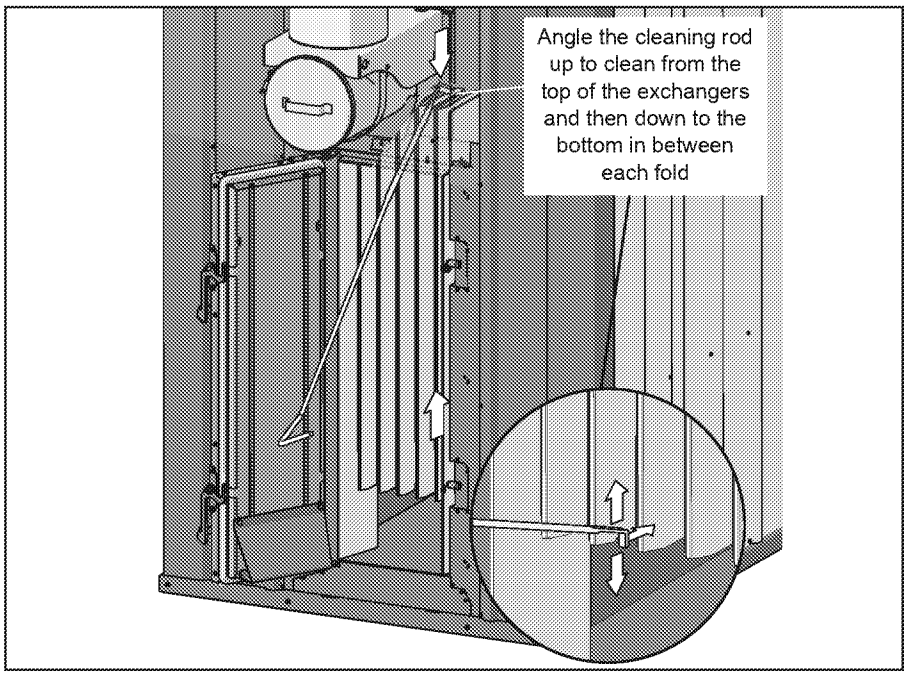

9. Using the maintenance tool and a shovel, clean any accumulated ash from beneath the heat exchanger. Dispose of ash properly.

10. Ensure that the door seal and frame are still clean of any debris or ash; then install each turbulator by gently pushing in and up.

11. Close and latch the heat exchanger door; then install the heat exchanger access cover and chimney inspection cover.

12. Press the **Power** button on the FireStar combustion controller to turn it on.

Section 7 - Reaction Chamber

1. Press the **Power** button on the FireStar combustion controller to turn it off.

⚠ CAUTION

Be sure to turn off the FireStar combustion controller before doing this procedure.

2. Unlatch and open the Reaction Chamber door.

3. Use the maintenance tool to pull the ash to the front of the furnace. Take care when pulling ash from each side of the Fusion Combustor not to move the refractory sections.

4. Use a small shovel to remove all of the ash and deposits from the Reaction Chamber. Take care not to damage the temperature sensor. You can also clean ash from the back of the furnace by opening the heat exchanger door.

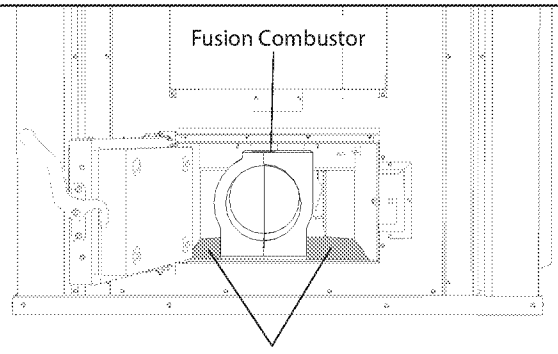

Carefully pull ash to the front of the Reaction Chamber on each side of the Fusion Combustor using the maintenance tool; then remove with small shovel.

NOTE: It is extremely important to clean ash from the entire Reaction Chamber area. If necessary, refer to section Heat Exchangers section for the procedure for removing ash from heat exchanger area.

⚠ CAUTION

Take care not to damage the temperature sensor when removing ash.

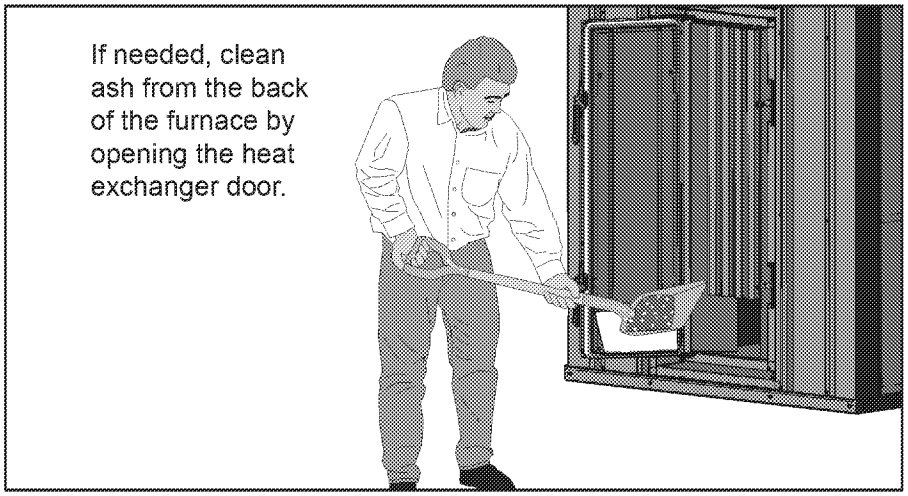

5. Close the Reaction Chamber door and secure the latch.

6. Press the **Power** button on the FireStar combustion controller to turn it on.

Section 8 - Firebox

⚠ WARNING

Remove all wood, coals and ash from the firebox.

1. Scrape the top and sides of the firebox and around the door frame area to remove any deposits; then inspect the surfaces of the firebox for any signs of corrosion, paying particular attention to the ash level and below.

NOTE: When scraping to clean inside the firebox, be sure to pay particular attention to the corners and to the seams.

2. If signs of corrosion are present, contact your dealer. Refer to the section Corrosion is Present in the Troubleshooting section.

3. A thin, tar-like creosote layer may form on the firebox walls and migrate toward the bottom of the firebox where it could collect into a thicker layer. Normally this layer will burn up as it collects on the bottom. If it migrates to the bottom of the firebox and does not burn up, it must be removed. Do not allow it to cover or restrict air flow through the combustion air outlets or bottom of the firebox. If larger, thick, dry deposits form on the walls in the firebox, they should be removed with the maintenance tool.

NOTE: Be aware that the hotter the fire, the less creosote is deposited, so weekly cleaning may be necessary in mild weather, even though monthly cleaning may be enough in coldest months.

Section 9 - Combustion Air Tubes

NOTE: If the combustion air tubes are becoming restricted by ash or creosote, it is caused by operating the furnace incorrectly. It is important to follow the recommended operation and maintenance procedures (see Adding Wood section).

Primary combustion air is supplied to the firebox through the combustion air outlets located in the front air channel and in the side combustion air tubes. Be sure to clean off any buildup around the combustion air tube holes and buildup that may collect around the combustion air tubes themselves.

The side combustion air tubes can be removed if necessary. To remove, lift the end of the tube closest to the back of the firebox up off of the retaining pin, then in and toward the back of the firebox. Install by reversing this procedure.

NOTE: If there is a large amount of buildup on the exterior of the combustion air tube, it may be necessary to first remove the buildup to make removal easier.

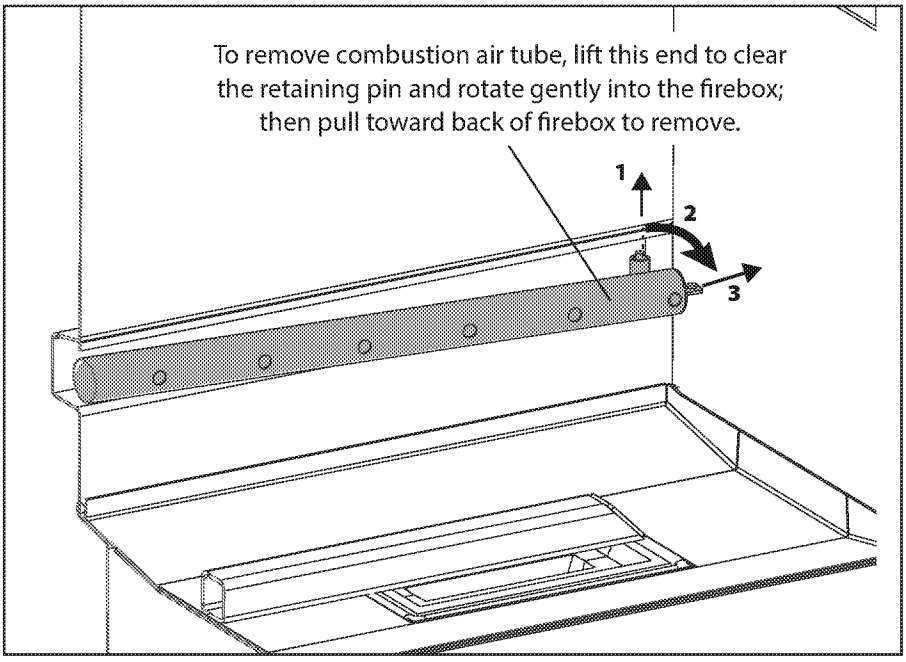

Section 10 - Combustion Air Fan

1. Disconnect power to the outdoor furnace.

⚠ WARNING

Do not proceed without testing that power is disconnected.

2. Remove the airbox access cover; then open the hinged airbox door. Inspect the combustion air fan inlet screen and fan wheel and clean if necessary. Make sure the air intake is clean and not obstructed.

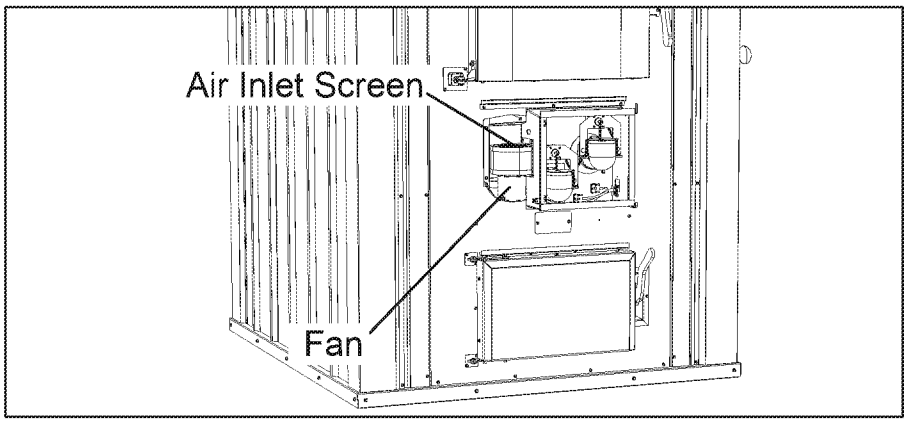

NOTE: Only if the decal on the fan housing indicates to oil the bearings at the end of each heating season, oil the combustion fan bearings using the following procedure.

4. If the decal on the fan housing indicates to oil the bearings, remove the bolts securing the combustion fan and remove the combustion fan. Hold the fan so the oil locations are upright; then apply 10 drops of SAE 20 non-detergent oil (e.g., 3-IN-ONE® Oil) in each location, as shown. Install the combustion fan and secure with bolts.

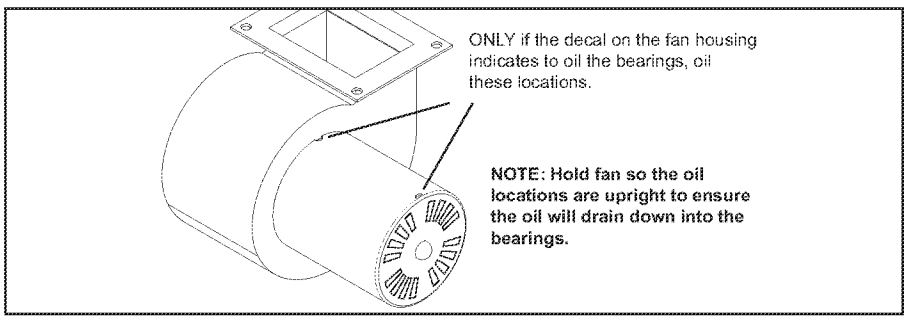

5. Close and secure the airbox door. Install the airbox access cover.

⚠ DANGER

Do not connect power or operate the outdoor furnace with the airbox access cover removed. The outer airbox cover must be installed and secured with screws.

Section 11 - Air Charge Tube and Refractory

Removing and inspecting the air charge tube and inspecting the refractory is best done after the outdoor furnace has been shut down and the firebox has been cleaned according to the Complete Firebox Cleaning Procedures.

NOTE: The air charge tube and refractory are wear items.

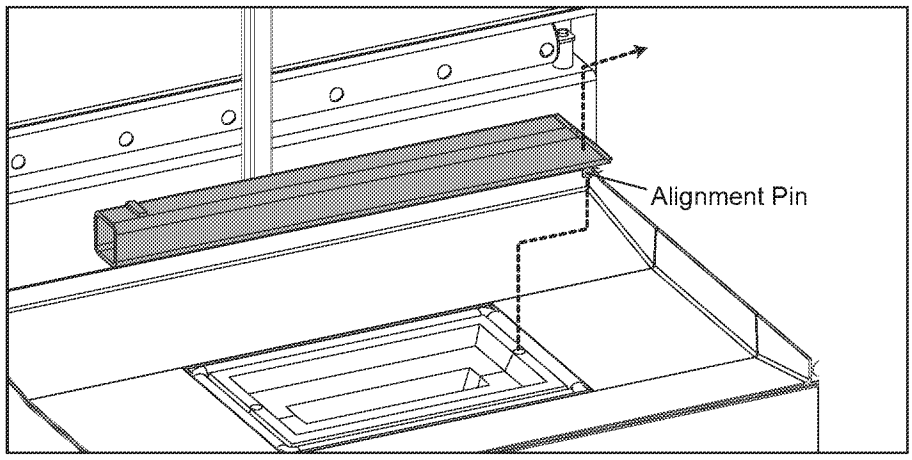

1. Remove the air charge tube by lifting and then sliding it toward the rear of the outdoor furnace. Inspect the mixing channel to see the area is not plugged.
2. Inspect each refractory module for damage. Small cracks and chips in the refractory are normal. If large pieces of the refractory modules are missing, contact your Central Boiler dealer.
3. Install the air charge tube making sure the alignment pin is seated in the alignment hole in the refractory modules.

Section 12 - Primary Air Elbow

1. Disconnect the electrical power to the outdoor furnace at the main power source.

⚠ WARNING

Do not proceed without testing that power is disconnected. Make sure the power cannot be reconnected while servicing the actuator motors (i.e., use lock out, tag out).

2. Remove the outer airbox cover; then open the airbox door.
3. Disconnect the actuator motor wiring harness.
4. Loosen the hose clamp securing the primary air elbow to the air tube; then remove the assembly from the airbox.

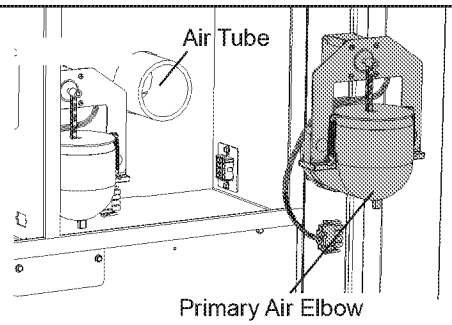

5. Inspect the elbow and clean out any build-up or blockage.

NOTE: A *small* amount of material in the elbow is normal and is not an indication of improper operation.

NOTE: If there is creosote buildup in the primary air elbow, it is caused by operating the furnace incorrectly. It is important to follow the recommended operation and maintenance procedures (see Adding Wood section).

6. Inspect the air tube for blockage or obstructions. To remove blockage or obstructions in the air tube, a screwdriver and a shop vac may be useful.

7. Install the primary air elbow over the air tube; then tighten the hose clamp.

8. Connect the actuator motor wiring harness.

9. Close and secure the airbox door. Install the outer airbox cover and secure with screws.

⚠ DANGER

Do not connect power or operate the outdoor furnace with the outer airbox cover removed. The outer airbox cover must be installed and secured with screws.

10. Connect the electrical power to the outdoor furnace at the main power source.

Section 13 - Complete Cleaning Procedures

The frequency for performing a complete cleaning will vary depending on a number of factors, including your heat load requirements, type of wood used, and the moisture of the wood.

NOTE: Proper maintenance of the firebox, Reaction Chamber, heat exchanger, chimney transition box and chimney tee are essential for the outdoor furnace to function properly and for longevity.

NOTE: It may be best to allow the wood and coals to burn out completely before this type of cleaning.

⚠ CAUTION

Always wear the appropriate personal protective gear (e.g., protective gloves, clothes, dust mask, etc.) when cleaning ash from the firebox and the Reaction Chamber, etc.

⚠ CAUTION

Clear the entire area surrounding the outdoor furnace of any combustible materials before performing these cleaning procedures.

⚠ WARNING

Be careful not to spill any coals or ash. Place coals and ash in a metal container with a tight-fitting metal lid.

NOTE: Refer to the illustration and clean the areas identified in the order shown. For each area in the illustration, refer to the corresponding maintenance section.

1. Press the **Power** button to turn the FireStar combustion controller off.

⚠ CAUTION

Be sure to turn off the FireStar combustion controller before doing this procedure.

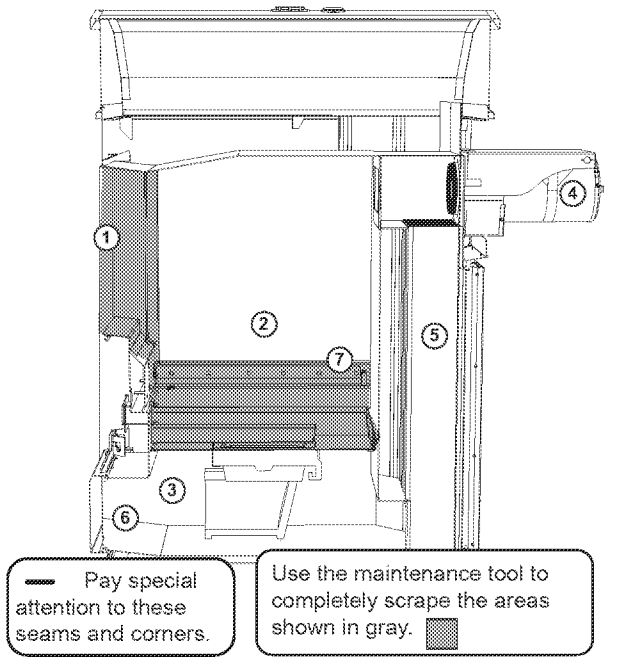

Clean ash and deposits from the areas identified in the order shown. Refer to the corresponding maintenance sections for detailed procedures.

(1) Door Frame (2) Firebox (3) Reaction Chamber (4) Chimney Tee
(5) Heat Exchangers (6) Reaction Chamber
(7) Combustion Air Outlets

© 2019 Central Boiler

Door Frame

Open the firebox door; then scrape the face and surface area of the door frame to remove any deposits.

Firebox

See Maintenance Section 8 - Firebox.

Chimney Tee

See Maintenance Section 3 - Chimney Tee.

Heat Exchangers

See Maintenance Section 6 - Heat Exchangers.

Reaction Chamber

See Maintenance Section 7 - Reaction Chamber.

Combustion Air Tubes / Air Charge Tube

See Maintenance Section 9 - Combustion Air Tubes and Maintenance Section 11 - Air Charge Tube and Refractory.

SERVICEABLE ITEMS

NOTE: These procedures should be performed by a qualified individual and in accordance with any and all federal, state/provincial and local codes and regulations. When performing work on an appliance observe all precautions in the literature, tags and labels attached to the appliance and other safety precautions that may apply. When working with electricity and electrical components, failure to follow precautions could result in property damage, personal injury or death.

NOTE: If any of these items are under warranty, remember that the warranty covers only the cost of the replacement part. Labor is not covered.

NOTE: Use only genuine Central Boiler parts and accessories if it ever becomes necessary to replace any component on the outdoor furnace.

FIREBOX DOOR HINGE / LATCH BEARING ADJUSTMENT

If the firebox door seal has been replaced and it is not sealing properly, the firebox door may need to be adjusted to close more tightly. When adjusting the firebox door, make sure it is not adjusted too tightly as damage to the firebox door, frame or door seal may result.

1. To tighten the hinges, loosen the inner adjustment nut and turn the outer nut in slightly; then tighten the inner adjustment nut securely. Adjust the top and bottom hinge for equal pressure when the door is latched.

2. To tighten the latch bearing, loosen the latch adjustment nut; then tap the latch bearing assembly in toward the firebox. Tighten the latch adjustment nut securely.

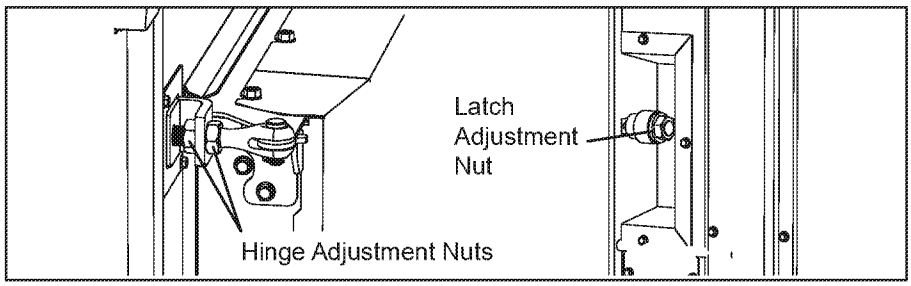

FIREBOX DOOR SEAL

The firebox door seal must be in good condition to ensure an airtight seal. If the outdoor furnace is operated with the door open or ajar, the firebox door seal may become damaged or brittle due to excessive temperatures. If replacement is necessary, use the following procedure:

⚠ WARNING

Remove all wood, coals and ash from the firebox.

1. Disconnect power to the outdoor furnace.

⚠ WARNING

Do not proceed without testing that power is disconnected. Make sure the power cannot be reconnected while testing components (i.e., use lock out, tag out).

2. Using a scraper, remove the firebox door seal on the inner side of the firebox door and clean any remaining silicone adhesive from the groove. Any residue left in the groove will interfere with the new silicone seal.

3. Apply a liberal amount of silicone sealant into the entire firebox door seal groove.

4. Starting at the center of the hinge side of the firebox door, insert the new silicone seal into the groove, pressing it firmly into the bead of silicone sealant. Make sure the seal is not stretched as it is pressed into the corners. Force the seal out to fill in the corners as shown.

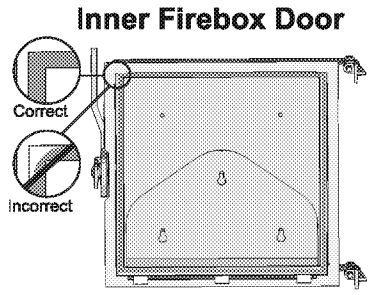

5. Scrape the face and surface area of the door frame to remove any deposits.

6. Close the firebox door. Make sure that pressure is felt as the latch is closed to ensure the seal is tight with the door frame.

7. Open the firebox door and check that there is an impression in the seal from the door frame. This mark must extend, with no gaps, around the entire perimeter of the firebox door seal. If needed, adjust the hinges and latch assembly.

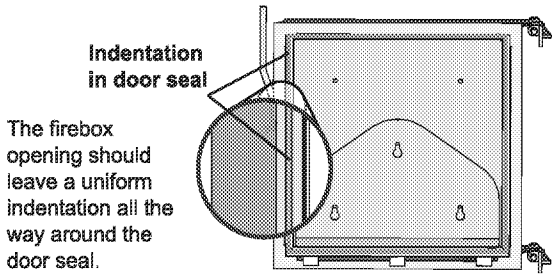

⚠ CAUTION

The firebox door seal will be damaged or destroyed if it is not installed properly.

REACTION CHAMBER DOOR SEAL

The Reaction Chamber door seal must be in good condition to ensure an airtight seal. If replacement is necessary due to the Reaction Chamber door seal becoming damaged or brittle, use the following procedure:

1. Disconnect power to the furnace.
2. Unlatch and open the Reaction Chamber door.
3. Use the maintenance tool to pull the ash to the front of the furnace; then use a small shovel to remove all of the ash and deposits from the Reaction Chamber. Take care not to damage the temperature sensor.

⚠ WARNING

Remove all ash from the Reaction Chamber.

4. Using a scraper, remove the Reaction Chamber door seal rope and clean any remaining silicone adhesive from the groove. Any residue left in the groove will interfere with the new seal.
5. Apply a liberal amount of silicone sealant into the entire Reaction Chamber door seal groove.
6. Starting at the center of the hinge side of the Reaction Chamber door, insert the new door seal rope into the groove, pressing it firmly into the bead of silicone sealant. Make sure the Reaction Chamber door seal rope is not stretched as it is pressed into the corners. Force the Reaction Chamber door seal rope out to fill in the corners as shown.

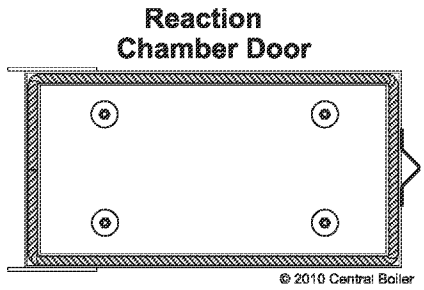

7. When the seal has been pressed into the groove all the way around the Reaction Chamber door, cut the end of the rope about one inch longer than required and press it tightly against the beginning end of the rope.
8. Close the Reaction Chamber door and secure the latch.

HEAT EXCHANGER DOOR SEAL

Heat Exchanger Door Seal Rope

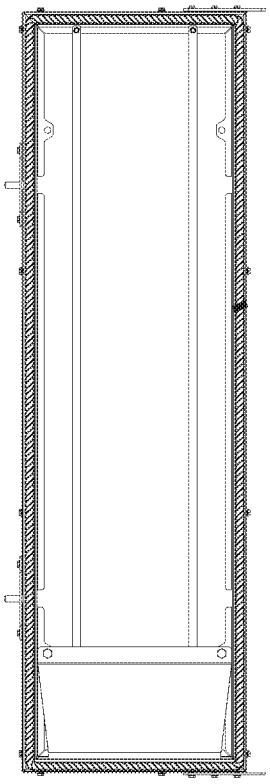

The heat exchanger door seal must be in good condition to ensure an airtight seal. If replacement is necessary due to the door seal becoming damaged or brittle, use the following procedure:

1. Press the **Power** button on the FireStar combustion controller to turn it off.

⚠ CAUTION

Be sure to turn off the FireStar combustion controller before doing this procedure.

2. Remove the heat exchanger access cover from the back of the furnace.
3. Carefully undo both latches on the heat exchanger door; then slowly open the door making sure to stand clear of the opening.

⚠ CAUTION

Open the heat exchanger door slowly and stand off to the side when opening it.

4. Using a scraper, remove the heat exchanger door seal rope and clean any remaining silicone adhesive from the groove. Any residue left in the groove will interfere with the new seal.
5. Apply a liberal amount of silicone sealant into the entire heat exchanger door seal groove.
6. Starting at the center of the hinge side of the heat exchanger door, insert the new door seal rope into the groove, pressing it firmly into the bead of silicone sealant. Make sure the door seal rope is not stretched as it is pressed into the corners. Force the door seal rope out to fill in the corners as shown.
7. When the seal has been pressed into the groove all the way around the heat exchanger door, cut the end of the rope about one inch longer than required and press it tightly against the beginning end of the rope.
8. Close the heat exchanger door and secure with latches. Install and secure the heat exchanger access cover.

CIRCUIT BREAKER

The circuit breaker is located in the pump access area and also serves as the furnace disconnect. If the circuit breaker trips (turns off), reset it by turning it on. If the circuit breaker continues to trip, a component may be faulty. It is possible to isolate a faulty component using the following procedure.

1. Disconnect power to the outdoor furnace.

⚠ WARNING

Do not proceed without testing that power is disconnected. Make sure the power cannot be reconnected while testing components (i.e., use lock out, tag out).

2. Remove the airbox access cover; then open the airbox door.
3. Disconnect the actuator motor harness and disconnect the fan harness.
4. To test for a faulty component, connect one component at a time (e.g., start with one of the actuator motors); then connect power to the outdoor furnace. If the circuit breaker trips, the component is likely faulty. If not, disconnect power to the outdoor furnace and repeat the procedure until all components have been tested.

⚠ CAUTION

Disconnect power to the outdoor furnace before disconnecting a component and before connecting a component.

5. Close and secure the airbox door. Install the airbox access cover.

⚠ DANGER

Do not connect power or operate the outdoor furnace with the outer airbox cover removed. The outer airbox cover must be installed and secured with screws.

AIRBOX SEAL

Replace the airbox seal if it becomes damaged or worn to maintain proper operation of the furnace. See your Central Boiler dealer for replacement seals.

NOTE: It is best to replace the entire seal. Over time, the seal will compress, and replacing it in sections may result in the old sections not sealing completely against the airbox door.

1. Disconnect power to the outdoor furnace.

⚠ WARNING

Do not proceed without testing that power is disconnected. Make sure the power cannot be reconnected while replacing the airbox seal.

2. Remove the airbox access cover; then open the airbox door. Using a scraper or similar tool, scrape off the existing seal from the airbox.
3. Clean off any remaining adhesive residue with alcohol or a suitable solvent.
4. Measure and cut replacement seal.

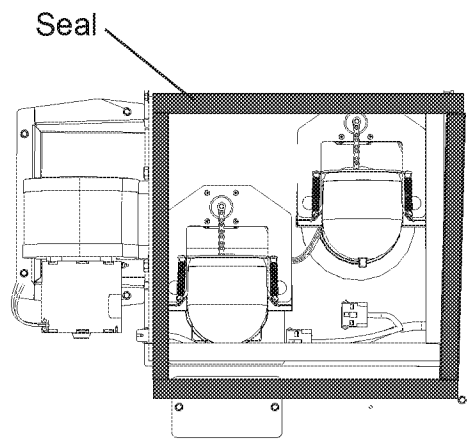

5. Remove the adhesive backing from the replacement seal and carefully apply the seal to the airbox as shown, making sure there are no gaps.
6. Close the airbox door and turn the furnace back on.
7. After the fan has started, use your hand to feel around the edges of the airbox door to check for leaks. A little air leakage, especially around the latches, is normal. If an excessive amount of air is felt, turn off the furnace; then check and repair/replace the seal if necessary.
8. Install the airbox access cover.

AIR CHARGE TUBE AND REFRACTORY MODULES

⚠ WARNING

Remove all wood, coals and ash from the firebox and allow the firebox to cool thoroughly before replacing the air charge tube and/or refractory.

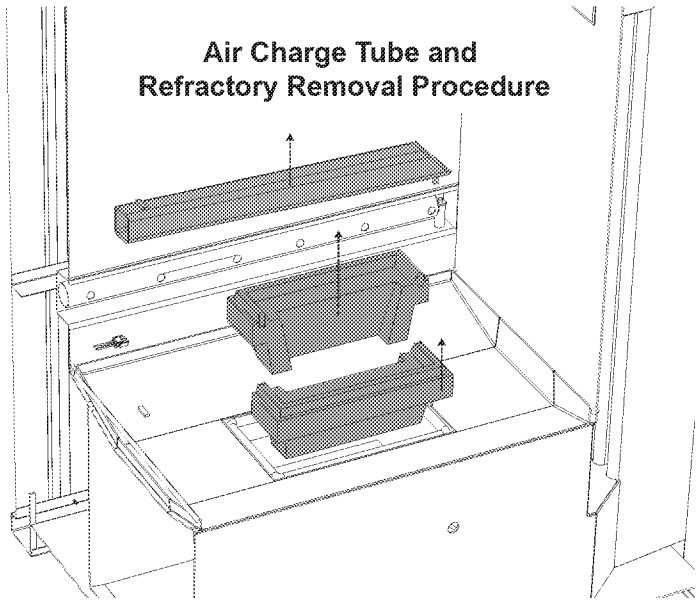

1. Remove the air charge tube by lifting it up and sliding it toward the back of the outdoor furnace.
2. Remove the rope gasket; then remove the existing refractory modules.
3. Ensure the area where the new refractory modules will be installed is clean and free of all debris. Install the new refractory modules; then install a new rope gasket on top of the refractory modules.
4. Install the new air charge tube by placing it in the opening at the front of the outdoor furnace as shown; then pull it toward the front of the outdoor furnace to secure it in place making sure the alignment pin fits into the alignment hole in the refractory modules.

THERMOCOUPLE

1. Disconnect power to the outdoor furnace.

⚠ WARNING

Do not proceed without testing that power is disconnected. Make sure the power cannot be reconnected while replacing the thermocouple.

2. Remove the pump access cover.
3. Disconnect the thermocouple connector; then remove the mastic tape from the thermocouple.
4. Remove the thermocouple.
5. Install the new thermocouple until the stop collar contacts the thermocouple tube.

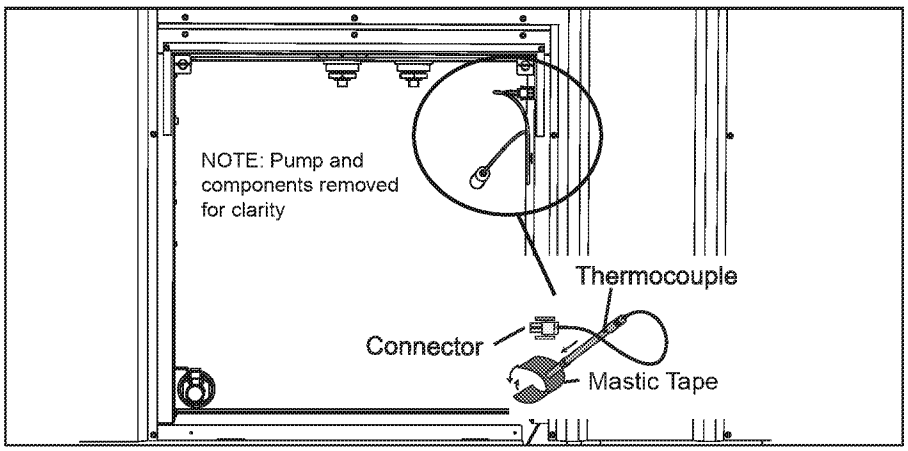

6. Secure the thermocouple with the mastic tape; then connect the thermocouple connector.
7. Install the pump access cover; then connect power to the furnace.

HEAT EXCHANGER DOOR INSULATION

NOTE: Insulation for the heat exchanger door is not standard fiberglass insulation. Use only the correct insulation when replacing or damage could occur. Contact your Central Boiler dealer for replacement insulation.

1. Press the **Power** button on the FireStar combustion controller to turn it off.
2. Remove all wood, coals and ash from the firebox and allow the firebox to cool thoroughly.

⚠ WARNING

Remove all wood, coals and ash from the firebox and allow the firebox to cool thoroughly before replacing the heat exchanger door insulation.

3. Remove the heat exchanger access cover from the back of the furnace.
4. Carefully undo both latches on the heat exchanger door; then slowly open the door making sure to stand clear of the opening.

⚠ CAUTION

Open the heat exchanger door slowly and stand off to the side when opening it.

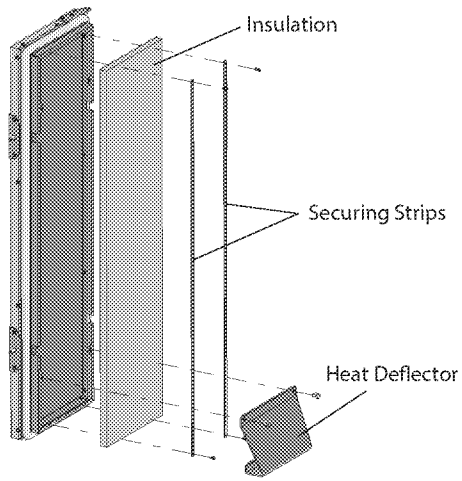

5. Swing the door open far enough to gain access to the inside of the door.
6. Wearing proper protective gear, use a brush or small broom to clean off any accumulated ash from the inside of the door.

7. Remove the heat deflector from the bottom of the door.
8. Remove the hardware and securing strips.
9. Carefully remove the insulation paying close attention to how the insulation is installed in the door and tucked into the edges of the door. This will aid in installation of the new insulation.
10. Before installing the new insulation, place it over the opening to make sure it is the correct size.
11. Place the new insulation inside the heat exchanger door with the reflective side facing out (toward you). Be careful not to tear the reflective material. Ensure that the edges of the new insulation are tucked into the edges of the door.
12. Install the securing strips. It may be necessary to adjust the insulation being careful not to tear it, after the securing strips are installed.
13. Install the heat deflector.
14. Check the insulation again to ensure that it is properly secured and attached to the inside of the heat exchanger door.
15. Carefully close and latch the heat exchanger door.

NOTE: The first few times the heat exchanger door is opened and closed after installing new insulation, it could seem more difficult to secure the latches. This is normal and once the insulation settles, securing the latches will be easier.

16. Install the heat exchanger access cover.

HEAT EXCHANGER ACCESS COVER INSULATION

NOTE: Be sure to check the temperature range for the spray adhesive. It may be necessary to replace the heat exchanger access cover insulation indoors to allow it to cure properly.

1. Remove the heat exchanger access cover from the back of the furnace.
2. Lay the cover on a piece of cardboard on a flat surface; then, wearing proper protective equipment, use a scraper to remove the insulation and any adhesive from the cover.
3. Test fit the new piece of insulation.
4. Using a good quality spray adhesive, follow the instructions on the can and apply the necessary amount to the inside of the cover.
5. Install the insulation in the cover, pressing down in multiple spots to ensure complete contact with the adhesive. Make sure the insulation is tucked all the way into the top of the cover.

6. Leave the cover on the flat surface until the adhesive cures according the adhesive manufacturer's instructions.

7. After the adhesive has cured, check to ensure the insulation has properly bonded to the cover; then install the heat exchanger access cover on the furnace.

COMBUSTION AIR TUBE / FRONT AIR CHANNEL

Press the **Power** button on the FireStar combustion controller to turn it off.

⚠ CAUTION

Be sure to turn off the FireStar combustion controller before doing this procedure.

⚠ WARNING

Remove all wood, coals and ash from the firebox and allow the firebox to cool thoroughly before working inside the firebox.

Combustion Air Tube

1. Lift the end of the tube closest to the back of the firebox up off of the retaining pin, then in and toward the back of the firebox. Install by reversing this procedure.

NOTE: If there is a large amount of buildup on the exterior of the combustion air tube, it may be necessary to first remove the buildup to make removal easier.

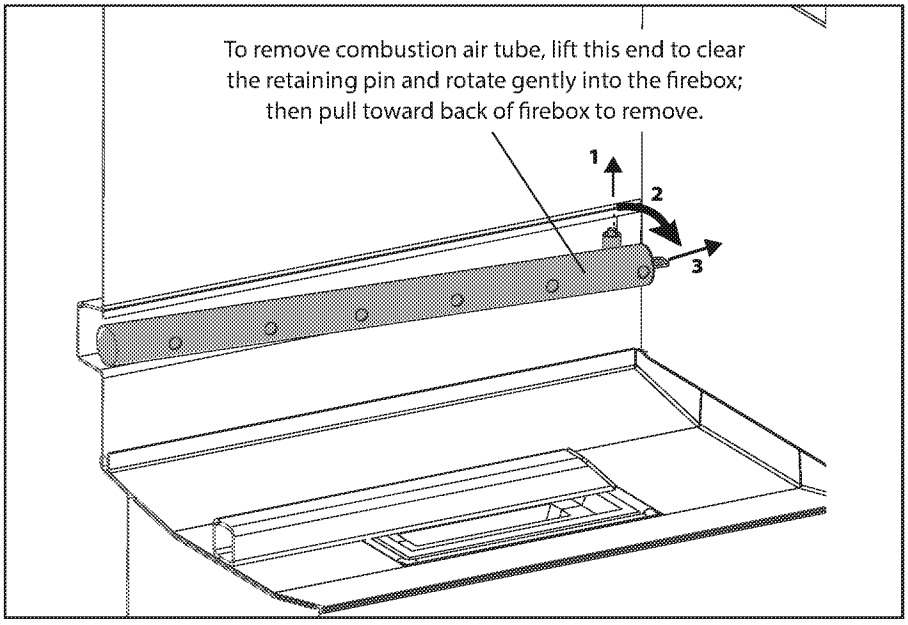

Front Air Channel

1. Remove the acorn nuts securing the front air channel and remove. Remove any ash or deposits from behind the air channel in the wall of the firebox.

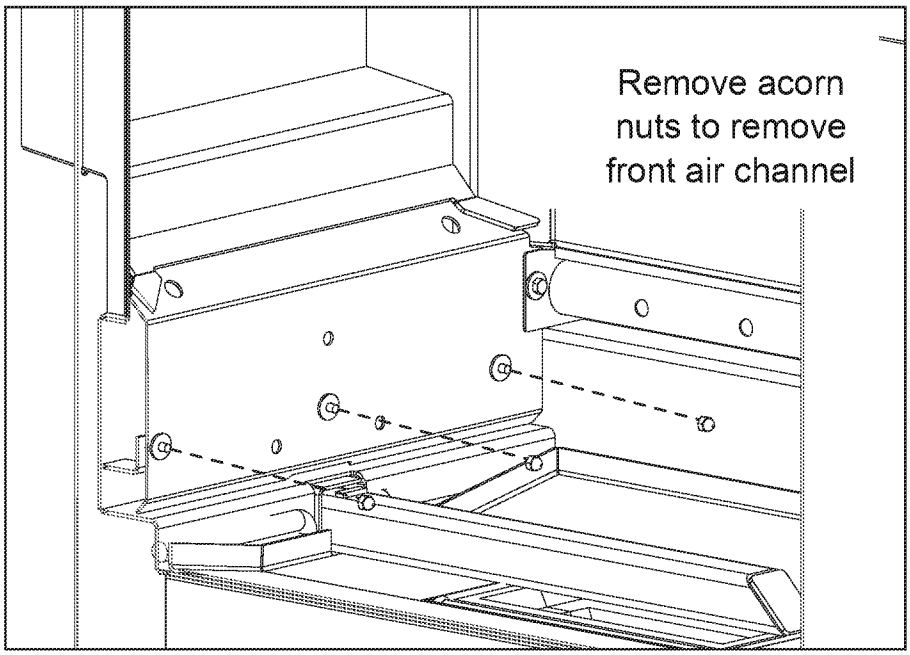

2. Install the new air channel. Apply a high-temperature, anti-seize compound to the stud threads; then secure with the acorn nuts and tighten securely.

TROUBLESHOOTING

GENERAL TROUBLESHOOTING INFORMATION

If the outdoor furnace is not operating the way it should, first review the information found in the Operation Instructions section, particularly the Adding Wood section.

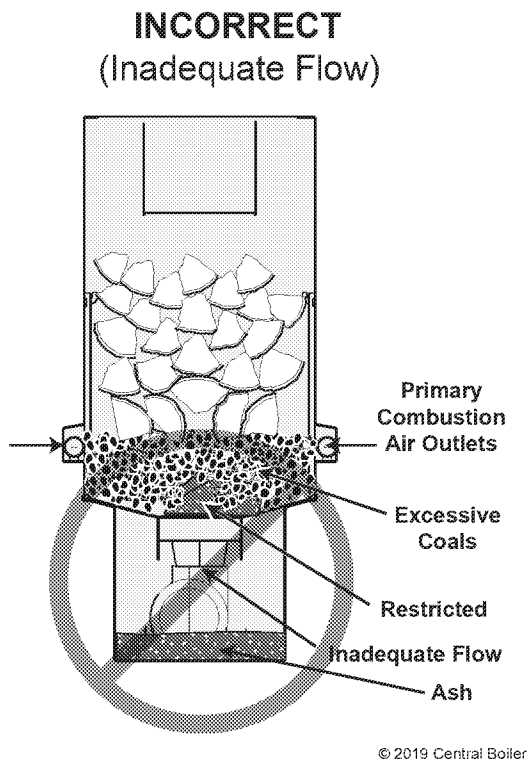

Is the Reaction Chamber full of ash?

The Reaction Chamber is where final combustion occurs. It is important that the Reaction Chamber remain unobstructed to allow final combustion to occur. It is not designed to be an ash collection area, although over time ash will gradually accumulate in the Reaction Chamber.

If ash builds up in the Reaction Chamber to a level that obstructs flow, the performance of the outdoor furnace will be affected, so the ash must be removed. A good rule is to clean the Reaction Chamber before it becomes 1/2 full (approximately 5" or 13 cm deep in any area of the Reaction Chamber).

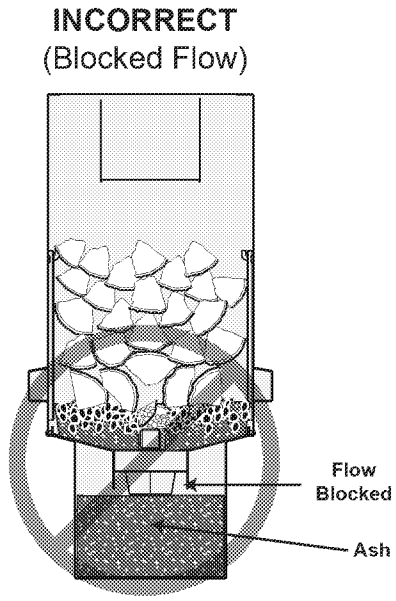

Are the air outlets plugged?

Primary combustion air is provided through the combustion air outlets in the firebox.If the air outlets are restricted or plugged, the furnace will not operate correctly. If it appears the combustion air outlets are plugged or restricted, refer to the Maintenance Sections for the Combustion Air Tubes and Air Charge Tube and Refractory. If after cleaning each combustion air outlet, air flow is still blocked, inspect the primary combustion air elbow. Refer to the Maintenance Section for Primary Air Elbow.

NOTE: If there is creosote buildup in the primary air elbow, it is caused by operating the furnace incorrectly. It is important to follow the recommended operation and maintenance procedures (see Adding Wood section).

Is there creosote and/or ash inside the airbox?

Creosote, ash, or even coals in the airbox is an indication that the outdoor furnace has not been maintained and/or operated properly. Especially important to the operation and efficiency of the outdoor furnace is unrestricted air flow throughout the entire system. Refer to Adding Wood for a detailed explanation of how to operate and maintain your Classic Edge.

One or more combustion air outlets are covered - If the level of coals and ash in the firebox is allowed to accumulate over the combustion air outlets, normal air flow can be blocked and could force coals and ash back into the airbox. Remove enough ash so the combustion air outlets are not covered. Review the Adding Wood section for more information.

TROUBLESHOOTING OTHER SITUATIONS

A. OUTDOOR FURNACE IS NOT OPERATING CORRECTLY

Review the information in the Adding Wood section, starting at step 5.

1. **Out of wood** - Add wood as necessary. Use correctly sized, seasoned wood.
2. **Mixing channel (area directly below the charge tube) or Fusion Combustor obstructed** - Inspect and clean as required.
3. **Combustion air outlets obstructed** - Clean as required to prevent the combustion air outlets from being obstructed.
4. **Combustion air fan obstructed or not running** - Check the screen over the fan inlet and the inside of the fan for any obstructions.
5. **Airbox leaking** - The airbox cover must be properly secured. Determine the cause and correct.
6. **Primary air actuator motor closed** - If the primary air actuator motor is not operating properly, determine the cause and correct.
7. **Reaction Chamber, heat exchanger or the chimney plugged** - If the Reaction Chamber, heat exchanger or chimney are plugged, determine the cause and correct.
8. **Door open** - If the display on the controller indicates Door Open, close the firebox door. Make sure the firebox door is properly latched and check the condition of the firebox door seal. If it is not sealing properly (indicated by a uniform indentation), replace the seal.
9. **Low water** - If the display on the controller indicates Low Water, the system senses a low water condition. Check the water level at the sight gauge and, if necessary, add water according to the Water Quality and Maintenance section. If adding water does not correct the problem, contact your Central Boiler dealer.

NOTE: If water needs to be added, it is very important to identify the cause of water loss and correct immediately. A leaky system or overheating commonly leads to dilution of the corrosion inhibitor and water jacket corrosion.

10. **Low water temperature for too long a period of time** - The display on the controller will indicate Fire Out and the controller will shut down the furnace if the water temperature has been too low for too long. Determine the cause of the water temperature being too low.
11. **Alarm condition** - Refer to the FireStar Combustion Controller Operation Manual.
12. **Chimney not drafting properly** - Draft is the force which moves air from the appliance up through the chimney. The amount of draft in your chimney depends on the length of the chimney, local geography, nearby obstructions and other factors. Draft occurs when the temperature in the chimney is high enough to cause a negative pressure that "pulls" the exhaust up and out the chimney.

    Proper draft is necessary for the Classic Edge to operate optimally. Too much draft may cause excessive temperatures in the appliance. Inadequate draft may cause backpuffing and plugging of the chimney.

    If poor draft is suspected, perform the following test: with the outdoor furnace and chimney at normal operating temperature, loosen the chimney inspection cover and pull it back about an inch. If exhaust comes out from around the cover, pressure in the chimney may be incorrect and adding more chimney sections may be required. However, due to many variables, even if exhaust does not come out from around the cover, the chimney might still not be drafting properly at all times. Due to a number of variables, poor draft can be an intermittent problem.

NOTE: A qualified installer may perform the following test to check for proper draft. Before performing the test, the outdoor furnace should be completely cleaned to ensure nothing obstructs exhaust flow through the system. Fire the furnace and allow it to reach normal operating temperature before performing the test.

- Drill a hole in the chimney inspection cover; then with the outdoor furnace and chimney at normal operating temperature, use a manometer to check draft. If flue draft is less than -0.05 in. WC (-12.45 Pa) add more chimney sections.
- After the test, fill the hole in the chimney inspection cover with high-temp silicone.

Perform test with bypass closed at normal operating temperature.

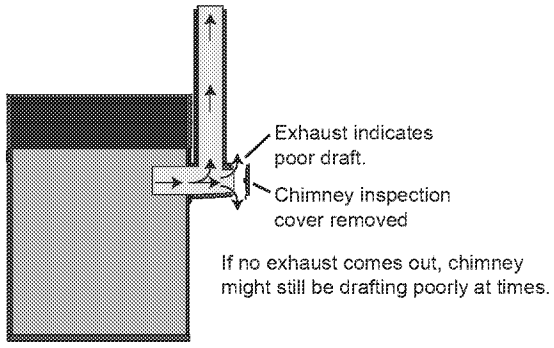

© 2015 Central Boiler

- If a spark arrestor is being used, make sure it is clean and unobstructed.
- Objects like buildings and trees in close proximity or nearby terrain (e.g., hills, valleys, etc.) can adversely affect air flow in the chimney. Adding chimney sections may overcome these factors.

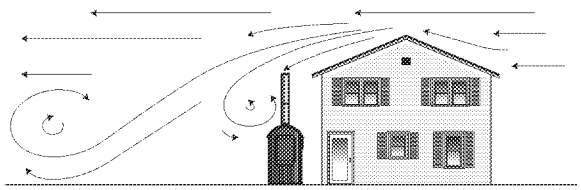

May cause poor draft.

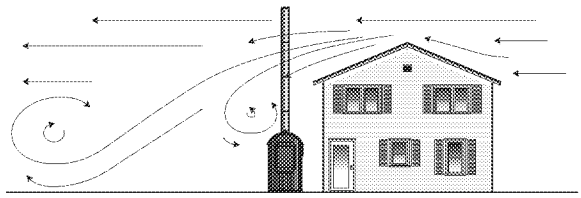

Allows for better draft.

© 2015 Central Boiler

B. FIRE GOES OUT OR KEEPS GOING OUT

Review the information in the Adding Wood section, starting at step 5.

C. BUILDING IS LOSING TEMPERATURE

Review the information in the Adding Wood section, starting at step 5.

1. **Circulation valve(s) closed** - Be sure the proper valves in the system are open to allow circulation.
2. **Circuit breaker off** - If there is a circuit breaker that supplies power to the outdoor furnace, check that it is on.
3. **Circuit breaker off** - Check that the circuit breaker switch (located in the pump compartment) is on. If the circuit breaker has tripped, determine the cause before resetting it.
4. **Circulation pump(s) not operating** - Check that circulation pumps are operating. If not, disconnect power to the pump. Close valves at the pump. Disassemble the pump and try to turn the pump shaft. If the shaft is stuck, replace the pump cartridge. Replace only the cartridge whenever possible. If necessary, replace the pump. Follow instructions supplied with the pump.
5. **Air in system** - Check for air in the water lines or heat exchangers. If you hear a gurgling sound in a heat exchanger, air is present in the system. Shut off the pump, wait 15 seconds and start the pump. If it is necessary to force air from lines, refer to Initial Start-up Procedures.
6. **Building(s) poorly insulated or uninsulated** - Poorly insulated or uninsulated buildings, buildings with uninsulated or poorly insulated ceilings, or a lack of proper insulation under radiant flooring can cause excessive fuel consumption and or heating problems.
7. **Supply and return lines installed incorrectly** - Make sure the hot supply line is connected to the correct fitting on the outdoor furnace and heat exchanger.
8. **Circulation pump(s) installed backwards** - Check that pump flow direction is correct. If not, shut off power to pump. If the flow is not in the correct direction, disconnect pump from water line and reverse pump mounting to correct flow direction. If the pump is not mounted on the outdoor furnace, check for proper pump mounting location.
9. **Underground supply and return lines insulated poorly** - Heat loss from poorly insulated underground supply and return lines is often indicated by an unusually high amount of snow melting above the lines when the ground temperature is 10° F (-12°C) or colder.
10. **Supply and return lines uninsulated** - Uninsulated supply and return lines in areas that are not intended to be heated (unheated crawl spaces, under mobile homes, etc.) may cause excessive heat loss. Insulate the supply and return lines.
12. **Poor water quality** - Water with high amounts of solids, sand or dirt can create deposits inside the wall of heat exchanger components, reducing the amount of heat output. If this condition is suspected, contact your Central Boiler dealer.
13. **New construction with radiant in-floor heat** - Bringing a cold concrete slab up to temperature the first time will take a considerable amount of time and wood; once warm, wood consumption will be reduced if the concrete slab and building are insulated properly.
14. **Heat load too large** - Re-evaluate the system and match heat load to the outdoor furnace.

D. SMOKE COMING FROM BETWEEN FIREBOX DOOR AND FRONT OF THE DOOR FRAME

1. **Door seal faulty or door frame obstructed** - If there is smoke coming from between the firebox door and the front of the door frame for more than a short time after reloading, scrape the face and surface area of the door frame to remove any deposits. Check the condition of the firebox door seal and replace if necessary.
2. **Door hinges and/or latch need adjusting** - Adjust the hinges and/or latch bearing.

E. OUTDOOR FURNACE IS OVERHEATING

1. **Air entering through the firebox door or smoke coming out of the firebox door when the door is closed** - Make sure the firebox door is properly latched and check the condition of the firebox door seal. If it is not sealing properly (indicated by a uniform indentation), replace the seal. If firebox door does not close tightly, adjust using the appropriate procedure (see Owner Serviceable Items).

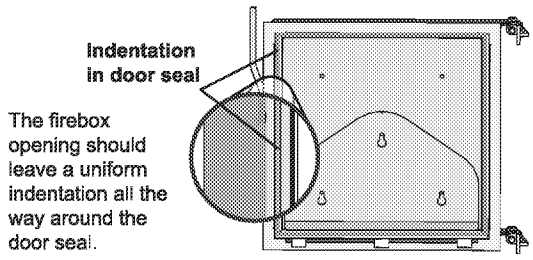

©2014 Central Boiler

NOTE: If the outdoor furnace is operated with the door open, the firebox door seal may be damaged.

2. **Actuator motor and/or air regulating disc stuck open or obstructed** - Remove any obstructions. Lubricate the chain with a high temperature dry film lubricant rated for chains. Be careful not to get lubricant on the actuator motor or motor shaft. If replacement is necessary, refer to Air Regulating Disc Gaps for the factory settings for the air regulating discs.

NOTE: If the outdoor furnace loses water from boiling, the problem should be identified and repaired immediately. Under normal operation, little or no water needs to be added. Adding water to the furnace may cause corrosion if not immediately treated with 1650XL Inhibitor Plus to the proper pH and nitrite levels. In addition, the amount of dissolved solids in the system (due to adding additional water) can cause problems.

3. **Water is not circulating** - Check to make sure the pump is operating and water is circulating continuously through the supply and return lines to keep water temperature uniform in the outdoor furnace.
4. **Circulation valve(s) closed** - Be sure the proper valves in the system are open to allow circulation.
5. **Pulse set to run too long and/or too often in a low heat draw situation** - Increase the time between idle pulses of air and/or decrease the amount of time the pulse is provided (see FireStar operating instructions).
6. **FireStar combustion controller set incorrectly** - Refer to FireStar Combustion Controller Operation Manual.

F. FREQUENT PUMP TROUBLE OR POOR WATER CIRCULATION

1. **Pump mounted incorrectly** - If the pump is not mounted on the outdoor furnace, it must be mounted at a minimum of four feet lower than the top water level in the outdoor furnace.

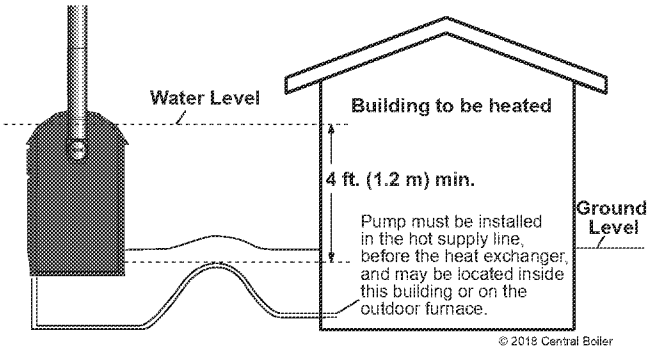

Make sure the pump motor is installed in a horizontal position. The junction box must not be located below the pump motor. If necessary, remove the four screws and rotate the pump body.

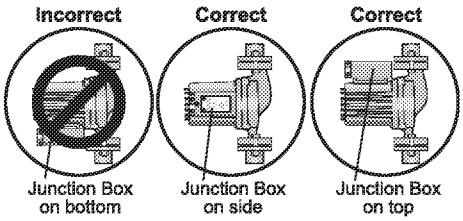

2. **Water will not circulate** - If the system has been drained and refilled, or if the system has been opened for any reason (e.g., replacement of pump, adding heat exchangers, repairing a leak), the system must be purged (see Initial Start-up Procedures).
3. **Poor water quality** - Water with high amounts of solids, sand or dirt can cause frequent pump failure. Use softened and/or filtered water.
4. **Deposits in water lines/heat exchanger walls** - If water high in silica or other mineral content has been used, material deposits may build up on the insides of the supply and return lines and on the heat exchanger walls. If this occurs, the system will need to be drained and then cleaned using Sludge Conditioner (p/n 166). The system must then be refilled with the proper amount of 1650XL Inhibitor Plus (p/n 1650) and fresh water.

G. BURNING AN EXCESSIVE AMOUNT OF WOOD

1. **High volume water heating** - High volume water heating (e.g., car wash, swimming pool, etc.) will require high wood consumption.
2. **Excessive heat loss** - See items 6-10 of Building is Losing Temperature.
3. **Supply and return line heat loss** - If not using ThermoPEX, supply and return lines buried in a wet, low-lying area may cause a large heat loss that will greatly increase wood consumption.
4. **High heat demand** - Concrete slabs (with radiant heat) that are poorly insulated or are exposed to water or cold outside temperatures will require increased wood consumption (see Hydronic Installations section). Bringing a cold concrete slab up to temperature the first time will take a considerable amount of time and wood; once warm, wood consumption will be reduced if the concrete slab and building are insulated properly. The following will also have a high heat demand: poorly insulated buildings, buildings with large amounts of glass windows/doors, buildings with overhead doors, greenhouses, uninsulated crawl spaces, outdoor air infiltration and air leaking through foundation.

H. VISIBLE EXHAUST COMING FROM CHIMNEY

Review the information in the Adding Wood section, starting at step 5.

There are conditions related to outside temperatures, humidity, fuel moisture, burn rate and other factors that can cause steam to be visible in the exhaust plume of combustion equipment, whether it is wood, gas or oil.

Seeing a white exhaust plume with moisture present is normal under many conditions and is not suggestive of poor combustion or high emissions.

Opacity is the amount of light which is blocked in an exhaust plume. It is a measurement that is usually stated as a percentage. For example, an opacity of 0% means that all light passes through while an opacity of 100% means that no light can pass through. Opacity measurements give an indication of the concentration of particles in an exhaust plume.

To read opacity correctly, observations should be made only when:

- The sun is shining and behind you,
- You are at least three times the distance of the chimney height away from the furnace, and
- The plume is traveling perpendicular to your position.

The observation should be conducted looking at the point of the plume where condensed water vapor (steam) is not present. Do not observe the plume itself but rather look through it at a contrasting background (such as green leaves or trees). There are many other important factors as well.

The amount of visible emissions can be reduced by burning seasoned wood, by making sure that your chimney meets the recommendations in this owner's manual and by loading the firebox to match your heat load. Once the water content of the wood has evaporated, the emissions become very transparent.

1. **Too much ash in firebox** - Refer to Routine Maintenance for ash removal.

I. CORROSION IS PRESENT - CALL DEALER

NOTE: To reduce condensation in the firebox, it is not recommended to set the temperature below 185˚F (85˚C).

1. **Burning garbage or plastic** -Do not burn garbage or plastic. It is likely unlawful and may damage the firebox in a very short period of time.

NOTE: Chloride or sulfurous gases can be generated if plastic or rubber is burned and will mix with the moisture from the wood to form hydrochloric or sulfuric acids in the firebox, creating corrosion.

2. **Firebox wasn't cleaned out at the end of the heating season** - Be sure to follow the post-heating season maintenance schedule which includes scraping out firebox and removing all ash.
3. **Cleaning rod not run through ash bed prior to loading wood** - It is important that you push the cleaning rod back and forth through the ash bed each time prior to loading wood to allow air flow and prevent the ashes from accumulating moisture. See Operating Instructions for more details.

GENERAL INFORMATION

Make note of these precautionary statements, also found on the outdoor furnace.

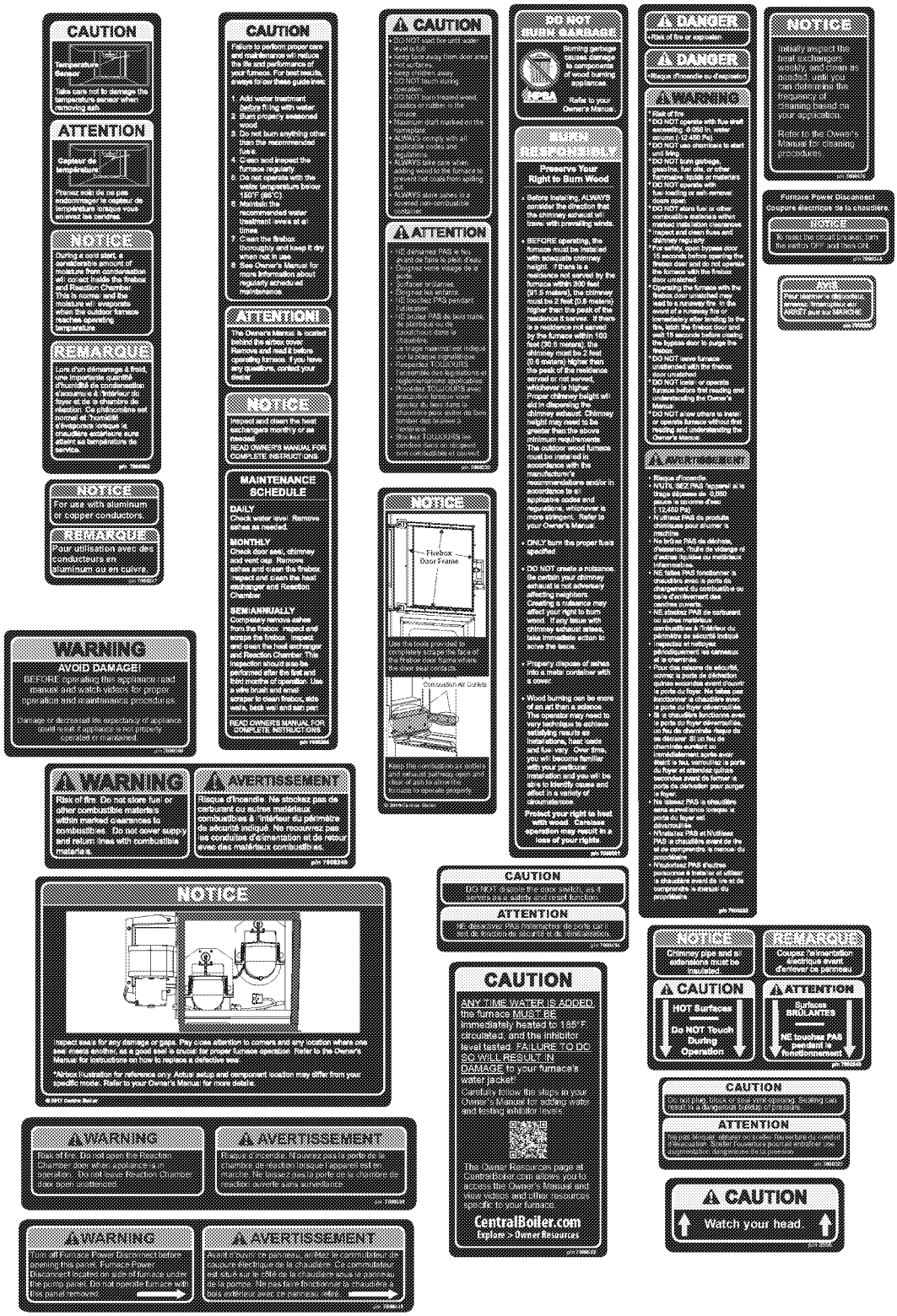

WIRING DIAGRAM

Classic Edge Wiring Diagram

MAIN HARNESS CONNECTOR 1

TERMINAL	WIRE COLOR & SIZE		DESTINATION
3	VIO	18GA	Auxiliary Temp 1
4	ORG	18GA	Auxiliary Temp 2
5	BRN	18GA	Water Temperature
8	PNK	18GA	Door Switch
9	RED	T/C	Reaction Temp -
10	YEL	T/C	Reaction Temp +
11	PNK/BLK	18GA	Reaction Door Open
12	VIO/BLK	18GA	Reaction Door Closed
13	GRY	18GA	Bypass Alarm Switch
14	BLU/BLK	18GA	Water Level Switch

MAIN HARNESS CONNECTOR 2

TERMINAL	WIRE COLOR & SIZE		DESTINATION
1	BLK/WHT	18GA	Primary Air Actuator
2	RED/WHT	18GA	Primary Air Actuator
3	BLU/WHT	18GA	Primary Air Actuator
4	GRN	18GA	Secondary Air Actuator
5	RED	18GA	Secondary Air Actuator
6	BLU	18GA	Secondary Air Actuator
8	BLK	16GA	120 VAC
9	GRN/WHT	18GA	Primary Air Actuator
11	YEL/BLK	18GA	+24VDC
12	GRN/BLK	18GA	DC Ground
13	BLK	18GA	Secondary Air Actuator
14	RED/BLK	18GA	+5VDC
15	GRN/YEL	16GA	Earth Ground
16	VIO	16GA	Combustion Fan

CONTROL PANEL 12 PIN CONNECTOR

TERMINAL	WIRE COLOR & SIZE		DESTINATION
1	BLK	16GA	120 VAC
2	GRN/YEL	16GA	Earth Ground
3	WHT	16GA	120 VAC Neutral
4	BLK	18GA	Secondary Air Actuator
5	GRN	18GA	Secondary Air Actuator
6	RED	18GA	Secondary Air Actuator
7	VIO	16GA	Combustion Fan
8	BLU/WHT	18GA	Primary Air Actuator
9	GRN/WHT	18GA	Primary Air Actuator
10	BLK/WHT	18GA	Primary Air Actuator
11	RED/WHT	18GA	Primary Air Actuator
12	BLU	18GA	Secondary Air Actuator

AIR BOX 12 PIN CONNECTOR

TERMINAL	WIRE COLOR & SIZE		DESTINATION
1	VIO	16GA	Combustion Fan
2	GRN/YEL	16GA	Earth Ground
3	WHT	16GA	120 VAC Neutral
4	BLK/WHT	18GA	Primary Air Actuator
5	GRN/WHT	18GA	Primary Air Actuator
6	RED/WHT	18GA	Primary Air Actuator
8	BLU	18GA	Secondary Air Actuator
9	GRN	18GA	Secondary Air Actuator
10	BLK	18GA	Secondary Air Actuator
11	RED	18GA	Secondary Air Actuator
12	BLU/WHT	18GA	Primary Air Actuator

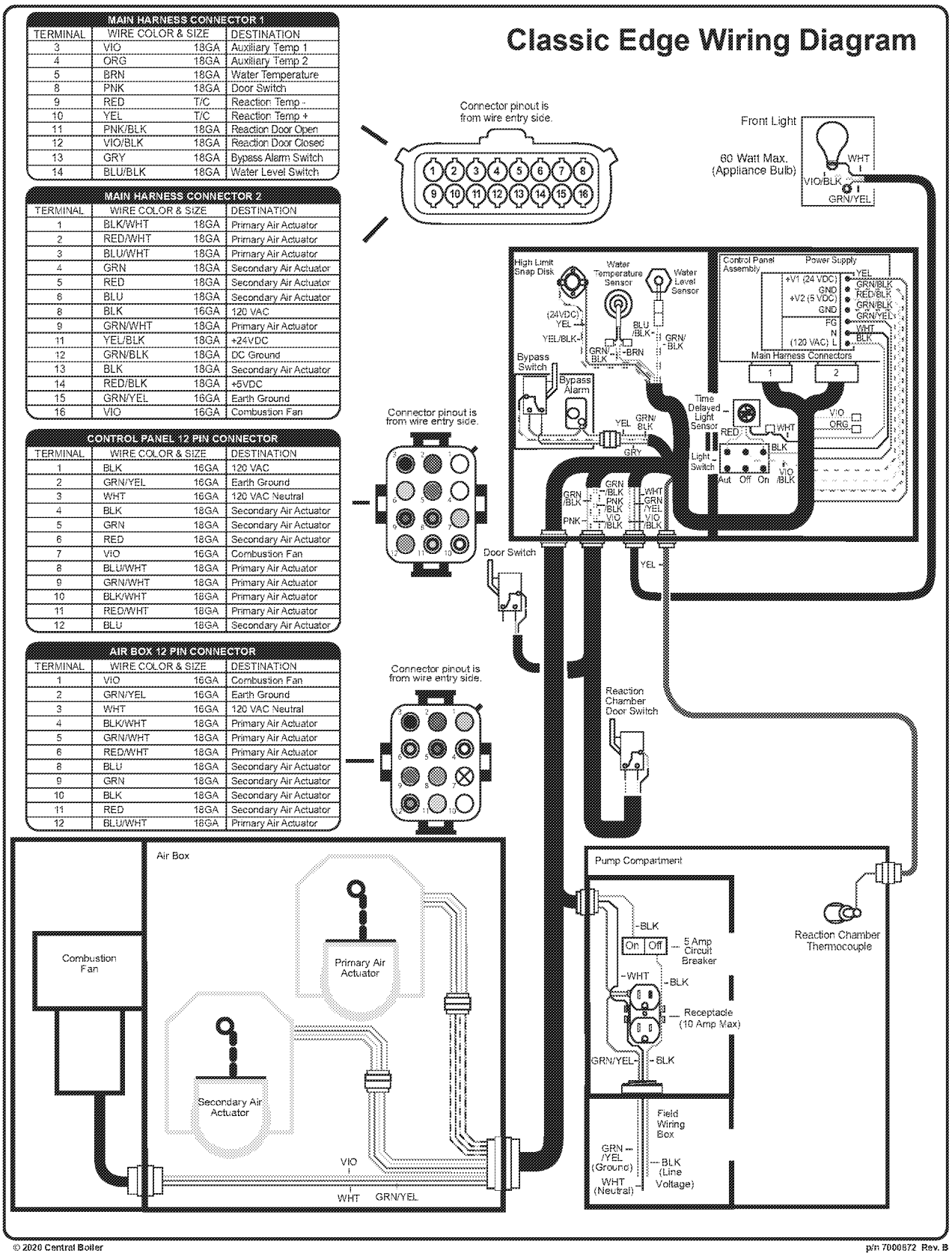

© 2020 Central Boiler p/n 7000872 Rev. B

WATER SAMPLE INFORMATION - TITANIUM SERIES MODELS

NOTE: It is your responsibility as owner to ensure that your water sample information is accurate and that you submit your samples on a timely basis as required by the warranty for your stainless steel outdoor furnace. Failure to do so will result in a one year warranty.

WATER SAMPLE LABEL INFORMATION

Use the Water Sample Kit provided in your owner's packet or include the water sample label information below when mailing water samples to Central Boiler.

NAME: _____

ADDRESS: _____

CITY: _____ STATE: _____ ZIP: _____

EMAIL: _____

PHONE: _____ FURNACE SERIAL # _____

DEALER: _____

DATE SAMPLE COLLECTED: _____

☐ NO ANTIFREEZE ADDED ☐ ANTIFREEZE ADDED

Please check ONE box

FOR LAB USE ONLY:

Moly pH Ni Date

MAILING LABEL

Use the Water Sample Kit provided in your owner's packet or send water samples to Central Boiler, Attn: Water Quality Department, 20502 160th Street, Greenbush, MN 56726.

FROM _____

_____

_____

CENTRAL BOILER, INC.
ATTN: WATER QUALITY DEPARTMENT
20502 160th Street
Greenbush, MN 56726

LIMITED WARRANTY - CLASSIC EDGE TITANIUM SERIES MODELS

Central Boiler, Inc. ("Central Boiler") warrants to the original owner, except (a) parts manufactured by others and excluded from warranty coverage below; and (b) parts or items specified below as covered by a limited one year warranty, Central Boiler Classic, Classic Edge and E-Classic Titanium Series furnaces against defects in workmanship and against corrosion failure of the firebox/water jacket assembly for a period of TWENTY-FIVE (25) YEARS from the date of original retail purchase, provided that the Limited Warranty Registration Form is completed and sent to Central Boiler within ten (10) days of the original owner taking possession of the furnace and the original owner strictly complies with the instructions for maintenance and water treatment contained in the Owner's Manual; otherwise this Limited Warranty shall be for a period of ONE (1) YEAR from the date of manufacture or one year from original retail purchase, if proof of purchase date can be provided.

If a failure of a warranty covered part occurs that is caused by a defect in workmanship or corrosion, at its option Central Boiler will (1) repair or replace (using new or refurbished replacement parts) the defective or failed part based on the date of original retail purchase at the following prorated scale:

First – Fifth year: Parts and labor will be covered at 100%
Sixth year: Parts will be covered at 70%
Seventh year: Parts will be covered at 60%
Eighth year: Parts will be covered at 50%
Ninth year: Parts will be covered at 40%
Tenth – Twentieth year: Parts will be covered at 15%
Twenty-first – Twenty-fifth: Parts will be covered at 10%

(2) exchange the furnace with a comparable model furnace that is new or which has been manufactured from new or serviceable used parts and is at least functionally equivalent to the original furnace, or (3) provide a discount off the retail purchase price of a new Central Boiler furnace of comparable model based on the pro-rated scale: Years 1-5 100%, years 6-7 at 50%, years 8-10 at 40%, years 11-15 at 30% and years 16-25 at 10%. A replacement furnace/part assumes the remaining warranty of the original furnace/part or ninety (90) days from the date of replacement or repair, whichever provides longer coverage. If a furnace or part is qualified for replacement under the provisions of this limited warranty, at Central Boiler's discretion, the furnace or part may be required to be returned to Central Boiler for inspection and recycling or disposal.

Because maintaining the corrosion inhibitor at a proper level is imperative to preventing corrosion failures, to qualify for the 25 year warranty the operator must comply with the instructions in the owner's manual for maintenance and water treatment and send a furnace water sample when the furnace is initially put into service and once each year thereafter to confirm proper maintenance and water treatment. No warranty claim can be approved unless the furnace registration and the required water test verifications are on file at Central Boiler.

Parts Manufactured By Others. Parts that are factory-installed by Central Boiler, but are manufactured by others, may be covered by their own manufacturer's warranty and are not covered by this limited warranty, except the FireStar™ combustion controller on the Classic, Classic Edge and E-Classic Titanium Series furnace is warranted against defects in workmanship for a period of two (2) years from the date of original retail purchase, provided that the Limited Warranty Registration Form is completed and sent to Central Boiler within ten (10) days of the original owner taking possession of the furnace; otherwise this limited warranty shall be for a period of ONE (1) YEAR from the date of original retail purchase. This limited warranty covers the controller part only; service calls, mileage, and labor to diagnose the problem and install a new part are not covered.

Parts Covered by a Limited One Year Warranty. The following parts are covered by a limited warranty for workmanship defects for one year: gaskets, seals, heat shields, paint, charge tube, firebox ash pan, combustors, aquastats, actuators, heat refractory, and firebrick. This limited warranty covers the part only; service calls, mileage, and labor to diagnose the problem and install a new part are not covered.

EXCLUSIONS AND LIMITATIONS - This Limited Warranty applies only to Central Boiler Classic, Classic Edge and E-Classic Titanium Series outdoor furnaces. This limited warranty covers only those defects or corrosion failures that arise as a result of normal use of the outdoor furnace and does not cover any other defects or problems, including those that arise as a result of: (a) improper maintenance (b) operation outside the furnace's specifications (see owner's manual), accident, abuse, misuse, misapplication, or parts that are not factory-installed; (c) service performed by anyone other than Central Boiler unless authorized by Central Boiler in writing; (d) modifications undertaken without the written permission of Central Boiler; or (e) if any Central Boiler serial number has been removed or defaced. This limited corrosion warranty will be void if the owner fails to maintain the proper amount of corrosion inhibitor in the system, fails to send water samples to Central Boiler as required, or burns materials in the firebox other than natural wood. This limited warranty excludes the cost of shipping, labor to remove or reinstall the furnace, plumbing labor and/or parts and the cost of alternative heat if the furnace is out of service for repairs. Warranty excludes replacement of water, inhibitors or other additives, and parts used in the system whether or not mounted on the furnace, such as pumps, valves, and piping.

Central Boiler is not liable for damage or repairs required as a consequence of faulty installations or applications by others or any event of force majeure. Central Boiler is not liable for incidents or accidents which can be prevented by the owner or that occur from the operation of the outdoor furnace. A backup heating system should be in place to prevent damage in case of failure to refuel the outdoor furnace or in the event that mechanical failure of the outdoor furnace or system occurs. Heat replacement representations found in Central Boiler promotional information should be used only as a guideline. Heat loss for all applications with all weather extremes and other heat variables must be considered when sizing an outdoor furnace for different applications.

THIS LIMITED WARRANTY AND REMEDIES SET FORTH ABOVE ARE EXCLUSIVE AND IN LIEU OF ALL OTHER WARRANTIES, REMEDIES AND CONDITIONS, WHETHER ORAL OR WRITTEN, EXPRESS OR IMPLIED. CENTRAL BOILER SPECIFICALLY DISCLAIMS ANY AND ALL IMPLIED WARRANTIES, INCLUDING, WITHOUT LIMITATION, WARRANTIES OF MERCHANTABILITY AND FITNESS FOR A PARTICULAR PURPOSE. IF CENTRAL BOILER CANNOT LAWFULLY DISCLAIM IMPLIED WARRANTIES UNDER THIS LIMITED WARRANTY, ALL SUCH WARRANTIES, INCLUDING WARRANTIES OF MERCHANTABILITY AND FITNESS FOR A PARTICULAR PURPOSE ARE LIMITED IN DURATION TO THE DURATION OF THIS WARRANTY. No Central Boiler dealer or employee is authorized to make any modification, extension, or addition to this limited warranty. CENTRAL BOILER IS NOT RESPONSIBLE FOR DIRECT, SPECIAL, INCIDENTAL OR CONSEQUENTIAL DAMAGES RESULTING FROM ANY BREACH OF WARRANTY OR CONDITION, OR UNDER ANY OTHER LEGAL THEORY. Some states and provinces do not allow the exclusion or limitation of incidental or consequential damages or exclusions or limitations on the duration of implied warranties or conditions, so the above limitations or exclusions may not apply to you. This warranty gives you specific legal rights, and you may also have other rights that vary by state or province.

OBTAINING WARRANTY SERVICE - To obtain warranty service, contact the Central Boiler dealer from whom you purchased your furnace or contact Central Boiler by telephone (800-248-4681) or mail (20502 160th Street, Greenbush, MN 56726). Please provide the dealer's name, original date of sale, model number and serial number in all communications. Central Boiler reserves the right to require the warranty service to be performed at a Central Boiler facility when deemed necessary by Central Boiler. All corrosion repairs will be performed at Central Boiler unless authorized by Central Boiler in writing.

Design Changes. Central Boiler reserves the right to change and improve the product design for improved performance without assuming responsibility to upgrade previously sold products.

©2019 Central Boiler

Section 4

Test Data by Run

Heater Seasoning Log

Model: Classic Edge 360 **Serial Number:** RD-0051

Wood Load

Date and Time	Wood Type and Moisture	Weight Added
10/14/2019	Oak/Ash Mix 17-19%	120lbs
10/15/2019	Oak/Ash mix 17-19%	115lbs
10/15/2019	Oak/Ash mix 17-19%	122lbs

Stack Temp

Date and Time	Reading, °F
10/14/2019 9:21AM	287
10/14/2019 10:25AM	285
10/14/2019 11:24AM	123°F
10/14/2019 12:25PM	182°F
10/14/2019 1:26PM	322°F
10/14/2019 2:21PM	178°F
10/14/2019 3:25PM	315°F
10/14/2019 4:30PM	195°F
10/14/2019 5:30PM	319°F
10/14/2019 6:29PM	192°F
10/14/2019 7:30PM	320°F
10/14/2019 8:32PM	180°F
10/14/2019 9:33PM	274°F
10/14/2019 10:31PM	182°F
10/14/2019 11:28PM	173°F
~~10/15~~	
10/15/2019 12:08AM	289°F
10/15/2019 1:30AM	203°F
10/15/2019 2:30AM	289°F
10/15/2019 3:28AM	179°F
10/15/2019 4:31AM	277°F

Stack Temp

Date and Time	Reading, °F
10/15/2019 5:32AM	223°F
10/15/2019 6:30AM	182°F
10/15/2019 7:00AM	327°F
10/15/2019 8:00AM	183°F
10/15/2019 9:00AM	307°F
10/15/2019 10:01AM	180°F
10/15/2019 11:14AM	307°F
10/15/2019 12:05PM	319°F
10/15/2019 1:03PM	171°F
10/15/2019 2:04PM	210°F
10/15/2019 3:04PM	329°F
10/15/2019 4:00PM	208°F
10/15/2019 5:00PM	312°F
10/15/2019 6:09PM	202°F
10/15/2019 7:01PM	182°F
10/15/2019 7:47PM	303°F
10/15/2019 8:43PM	220°F
10/15/2019 9:52PM	310°F
10/15/2019 10:45PM	201°F
10/15/2019 11:49PM	180°F
10/16/2019 12:40AM	303°F

Stack Temp

Date and Time	Reading, °F
10/16/2019 1:35AM	220°F
10/16/2019 2:45AM	200°F
10/16/2019 3:16AM	279°F
10/16/2019 4:12AM	220°F
10/16/2019 5:16AM	310°F
10/16/2019 6:19AM	230°F
10/16/2019 7:14AM	309°F
10/16/2019 8:33AM	179°F

Stack Temp

Date and Time	Reading, °F

Notes: Unit was loaded and run at a "medium" heat load as specified in the standard

Heater Seasoning Log

Model: Classic Edge 360 **Serial Number:** RD-0051

Wood Load		
Date and Time	Wood Type and Moisture	Weight Added
11/13/2019	Oak 18-20%	143 lbs

Stack Temp		Stack Temp		Stack Temp		Stack Temp	
Date and Time	Reading, °F	Date and Time	Reading, °F	Date and Time	Reading, °F	Date and Time	Reading, °F
11/13/2019 9:33Am	324°F	11/13/2019 8:09Am	327°F				
" 10:30Am	210°F	11/13/2019 9:03Am	201°F				
" 11:31Am	321°F						
" 12:30Pm	201°F						
" 1:35Pm	188°F						
" 2:27Pm	339°F						
" 3:31Pm	200°F						
" 4:28Pm	329°F						
" 5:34Pm	190°F						
" 6:43Pm	298°F						
" 7:36Pm	207°F						
" 8:38Pm	176°F						
" 9:24Pm	319°F						
" 10:24Pm	213°F						
" 11:59Pm	309°F						
" 12:41Am	238°F						
" 1:47Am	180°F						
" 2:45Am	331°F						
" 3:28Am	293°F						
" 5:20Am	309°F						
" 6:29Am	224°F						

Notes: Unit Was loaded and run at a "medium" heat load as specified in the Standard

Run 1

Hydronic Heating Appliances
Results

Manufacturer: Central Boiler
Model: Edge 360
Tracking No.: 2399
Project No.: 0117WB040E
Run: 1
Test Date: December 9, 2019

Burn Rate	**9.44 kg/hr dry**
Average Tunnel Temperature	112 degrees F
Average Gas Velocity in Dilution Tunnel - vs	8.1 feet/second
Average Gas Flow Rate in Dilution Tunnel - Qsd	20821 dscf/hour
Average Delta p	0.015 inches H20
Average Delta H	1.32 inches H20
Total Time of Test	283 minutes

PARTICULATE EMISSIONS RESULTS

First Hour:	**2.84** g/hr
	0.28 g/kg
	0.04 lb/mmBTU output
Complete Run:	**5.76** g/hr
	0.61 g/kg
	0.09 lb/mmBTU output

	SAMPLE TRAIN 1	SAMPLE TRAIN 2	AMBIENT SAMPLE TRAIN
Total Sample Volume - Vm	44.97 cubic feet	45.23 cubic feet	62.84 cubic feet
Average Gas Meter Temperature	79 degrees F	79 degrees F	67 degrees F
Total Sample Volume (Standard Conditions) - Vmstd	45.0 dscf	44.4 dscf	62.7 dscf
Total Particulates - mn	12.5 mg	12.2 mg	0 mg
Particulate Concentration (dry-standard)	0.00028 grams/dscf	0.00028 grams/dscf	0.000000 grams/dscf
Particulate Emissions	27.30 grams	27.01 grams	
Difference from Average	0.15 grams	0.15 grams	

Results Are Acceptable

	AVERAGE
Total Sample Volume - Vm	45.10 cubic feet
Average Gas Meter Temperature	79 degrees F
Total Sample Volume (Standard Conditions) - Vmstd	44.7 dscf
Particulate Concentration (dry-standard)	0.00028 grams/dscf
Particulate Emissions	27.15 grams
7.5% of the average particulate emissions	2.04 grams

ADDITIONAL ACCEPTANCE CRITERIA

Boiler Water Return Temperature >120 °F	**Acceptable**
Proportional Rate Variation >80%	**Acceptable**
90% of PR Values between 90-110%	**Acceptable**

	SAMPLE TRAIN 1 - FIRST HOUR
Total Sample Volume - Vm	9.44 cubic feet
Average Gas Meter Temperature	75 degrees F
Total Sample Volume (Standard Conditions) - Vmstd	9.52 dscf
Total Particulates - mn	1.3 mg
Particulate Concentration (dry-standard)	0.00014 grams/dscf
Particulate Emissions	2.84 grams
Burn Rate	10.14 (dry kg/hr)
Heat Output Rate	148277 BTU/hr

Hydronic Heating Appliances
Results

Manufacturer:	Central Boiler	Equipment Numbers:	
Model:	Edge 360		
Tracking No.:	2399		
Project No.:	0117WB040E		
Run #:	1		
Date:	12/9/19		

TRAIN 1 (First Hour emissions)

Sample Component	Reagent	Filter, Probe or Dish #	Weights		
			Final, mg	Tare, mg	Particulate, mg
B. Front filter catch	Filter	D930	119.2	117.9	1.3
C. Rear filter catch	Filter				0.0
D. Probe catch*	Probe				0.0
E. Filter seals catch*	Seals				0.0

Sub-Total	Total Particulate, mg:	1.3

TRAIN 1

Sample Component	Reagent	Filter, Probe or Dish #	Weights		
			Final, mg	Tare, mg	Particulate, mg
A. Front filter catch (remainder)	Filter	D931	128.2	118.9	9.3
B. Rear filter catch	Filter	D932	117.5	118.0	-0.5
C. Probe catch*	Probe	OES5	113571.5	113569.9	1.6
D. Filter seals catch*	Seals	R901	3386.1	3385.3	0.8

Sub-Total	Total Particulate, mg:	11.2
	Total Particulate, mg:	12.5

TRAIN 2

Sample Component	Reagent	Filter, Probe or Dish #	Weights		
			Final, mg	Tare, mg	Particulate, mg
A. Front filter catch	Filter	D933	129.4	119.3	10.1
B. Rear filter catch	Filter	D934	117.3	117.9	-0.6
C. Probe catch*	Probe	9	115696.5	115695.7	0.8
D. Filter seals catch*	Seals	R902	3301.4	3299.5	1.9

Total Particulate, mg:	12.2

AMBIENT

Sample Component	Reagent	Filter # or Probe #	Weights		
			Final, mg	Tare, mg	Particulate, mg
A. Front filter catch*	Filter	D899	119.0	119.0	0.0

Total Particulate, mg:	0.0

*Any particulate catch that results in a negative number, is assumed to be zero

Component	Equations:
A. Front filter catch	Final (mg) - Tare (mg) = Particulate, mg
B. Rear filter catch	Final (mg) - Tare (mg) = Particulate, mg
C. Probe catch	Final (mg) - Tare (mg) = Particulate, mg

Hydronic Heating Appliances
Fuel Moisture

Manufacturer:	Central Boiler
Model:	Edge 360
Tracking No.:	2399
Project No.:	0117WB040E
Technician:	B. Davis
Run #:	1
Test Date:	December 9, 2019

Wet Weight (lb)	% Moisture				
9.7	18.8	23.2	23.3	22.5	26.5
10.5	18.6	19.9	18.1	19.7	19.4
11.2	24.5	25.6	25.2	20.9	24.5
11.5	24.8	26.6	24.5	25.4	24.9
6.8	21	21	20.9	21	19.4
11.2	23.6	25.2	23.9	23.9	26.7
10.7	19.1	21.2	20.2	19.3	19.4
10.4	23.1	23.9	22.5	25	23.9
7.3	19.1	21.2	20.2	19.3	19.4
10.5	20.8	27	26.9	19.9	21.9
9.5	19.4	18.7	20.2	19.5	19.9
10.4	18.7	19.3	19.2	19.1	19.3

Total Weight of Load (lb): 119.7

Total Moisture of Load (%): 22.0

Equipment Numbers:

Hydronic Heating Appliances
Test Data

Run: 1

Manufacturer: Central Boiler
Model: Edge 360
Tracking No.: 2399
Project No.: 0117WB040E
Test Date: December 9, 2019
Technician: B. Davis
Beginning Clock Time: 16:26
Recording Interval: 1 min.
Total Sampling Time: 283 min.

Velocity Traverse Data	Pt.1	Pt.2	Pt.3	Pt.4	Pt.5	Pt.6	Pt.7	Pt.8	Pt.9	Pt.10	Pt.11	Pt.12	Center	
Initial dP	0.007	0.012	0.014	0.015	0.014	0.015	0.014	0.015	0.015	0.016	0.015	0.008	0.014	"H2O
Initial Temp.	111	111	111	112	112	112	113	113	113	113	113	114	112	oF

Air Velocity: Initial: <50 Final: <50 V_{strav} 7.87 ft/sec
Scale Audit: Pre: 10.0 Post: 10.0 Induced Draft: 0 V_{scent} 8.12 ft/sec
Pitot Tube Leak Test: Pre: 0 Post: 0 % Smoke Capture: 100 F_p 0.970
Flue Pipe Cleaned Prior to First Test in Series: Date: 9/17/2019

PM Control Module: 335, 336
Dilution Tunnel MW(dry): 29.00 lb/lb-mole
Dilution Tunnel MW(wet): 28.78 lb/lb-mole
Dilution Tunnel H2O: 2.00 percent
Dilution Tunnel Static: -0.167 "H2O
Pitot Tube Cp: 0.99

	(1)	(2)	(amb)
Meter Box Y Factor:	1.009	0.99	0.988

Barometric Pressure:	Begin	Middle	End	Average
	30.24	30.09	30.19	30.17 "Hg

Tunnel Velocity: 6.08 ft/sec.
Intial Tunnel Flow: 327.5 scfm
Average Tunnel Flow: 347.0 scfm
Tunnel Area: 0.785 ft2
Post-Test Leak Check (1): 0.000 cfm @ 6 in. Hg
Post-Test Leak Check (2): 0.000 cfm @ 6 in. Hg
Fuel Moisture (dry basis %): 22.0
Total Particulate (1): 12.5
Total Particulate (2): 12.2

Elapsed Time	Gas Meter Cubic Feet (1)	Gas Meter Cubic Feet (2)	Gas Meter Cubic Feet (amb)	Sample Rate, cfm (1)	Sample Rate, cfm (2)	Orifice dH (1)	Orifice dH (2)	Orifice dH (amb)	Meter oF (1)	Meter oF (2)	Meter oF (amb)	Meter Vac. in. Hg. (1)	Meter Vac. in. Hg. (2)	Dilution Tunnel Temp.	Dilution Tunnel dP	Pro. Rate (%) (1)	Pro. Rate (%) (2)	Fuel Weight, lb: Scale Reading	Fuel Weight, lb: Weight Change	Flow, gpm: Load Side Liquid Flow Rate	Flow, gpm: Boiler Side Liquid Flow Rate (optional)	Temperature Data, oF: Thermopile ΔT	Boiler to Heat Exch. Temp.	Heat Exch to Boiler Temp.	Inlet Load Temp.	Outlet Load Temp.	Stack	Filter (1)	Filter (2)	Ambient		Specific Heat of Inlet Water (BTU/lb-°F)	Mass Flow Rate of Inlet Water (lb/min)	Heat Output, Btu
0	0.000	0.000	0.000			1.22	1.04	0.25	71	71	69	1.87	1.30	111	0.016			119.7		3.16	15.3	108.4	163.3	142.4	53.2	161.6	359	70	71	69				
1	0.155	0.157		0.16	0.16	1.34	1.09	0.25	71	71	69	1.89	1.40	100	0.015	97	98	119.6	0.10	3.14	15.4	109.3	163.9	143.2	53.1	162.4	324	72	72	69		1.001	26.201	2866
2	0.314	0.316		0.16	0.16	1.33	1.07	0.25	71	71	69	1.92	1.40	107	0.014	104	103	118.5	1.06	3.26	15.5	108.9	163.2	143.1	53.1	162.1	352	73	73	69		1.001	27.170	2964
3	0.472	0.476		0.16	0.16	1.33	1.08	0.25	71	71	69	1.93	1.40	112	0.013	107	108	117.9	0.63	3.25	15.5	109.6	163.9	143.6	53.1	162.7	368	74	74	69		1.001	27.078	2971
4	0.629	0.637		0.16	0.16	1.33	1.08	0.25	71	71	69	1.92	1.40	113	0.015	99	101	117.4	0.55	3.20	15.5	110.6	165.0	144.3	53.1	163.7	373	74	74	69		1.001	26.677	2953
5	0.786	0.797		0.16	0.16	1.33	1.08	0.25	72	71	69	1.91	1.40	114	0.015	99	101	117.0	0.38	3.12	15.4	106.8	161.2	140.9	53.1	159.6	375	75	75	69		1.001	26.031	2777
6	0.944	0.957		0.16	0.16	1.33	1.07	0.25	72	72	69	1.91	1.40	113	0.015	100	100	116.5	0.44	3.18	15.4	109.4	164.6	142.9	53.1	162.5	373	75	75	69		1.001	26.514	2903
7	1.102	1.117		0.16	0.16	1.33	1.08	0.25	72	72	69	1.92	1.40	112	0.015	100	100	116.1	0.44	3.22	15.6	108.9	164.0	142.9	53.1	162.1	370	76	75	69		1.001	26.836	2927
8	1.260	1.277		0.16	0.16	1.33	1.07	0.25	72	72	69	1.92	1.40	113	0.015	100	100	115.6	0.48	3.18	15.4	107.7	162.5	141.6	53.0	160.7	371	76	76	69		1.001	26.515	2859
9	1.417	1.436		0.16	0.16	1.32	1.08	0.25	72	72	70	1.91	1.40	113	0.014	103	103	115.1	0.57	3.26	15.5	105.3	159.2	139.7	52.9	158.1	370	76	76	70		1.001	27.160	2862
10	1.574	1.597		0.16	0.16	1.32	1.08	0.25	72	72	70	1.91	1.40	112	0.015	99	101	114.6	0.46	3.22	15.5	107.2	161.1	141.3	52.8	160.0	369	76	76	70		1.001	26.838	2880
11	1.731	1.756		0.16	0.16	1.32	1.07	0.25	72	72	70	1.90	1.40	112	0.015	99	100	114.0	0.65	3.16	15.5	109.5	163.9	143.0	52.8	162.3	371	77	76	70		1.001	26.363	2891
12	1.888	1.916		0.16	0.16	1.32	1.07	0.25	72	72	70	1.91	1.40	111	0.014	102	104	113.8	0.16	3.15	15.4	110.2	164.8	143.7	52.8	163.1	366	77	76	70		1.001	26.308	2904
13	2.046	2.076		0.16	0.16	1.32	1.07	0.25	73	73	70	1.92	1.40	113	0.015	100	100	113.2	0.61	3.17	15.4	106.9	161.8	140.8	52.9	159.8	371	77	77	70		1.001	26.405	2826
14	2.202	2.234		0.16	0.16	1.31	1.06	0.25	73	73	70	1.91	1.40	114	0.012	110	111	112.7	0.43	3.05	15.4	107.4	162.1	141.8	53.0	160.3	374	77	77	70		1.001	25.395	2730
15	2.359	2.393		0.16	0.16	1.31	1.06	0.25	73	73	70	1.89	1.40	114	0.012	111	111	112.3	0.49	3.10	15.4	105.7	160.3	140.0	53.0	158.6	375	77	77	70		1.001	25.872	2738
16	2.515	2.552		0.16	0.16	1.31	1.06	0.25	73	73	69	1.89	1.40	114	0.015	98	100	111.7	0.55	3.26	15.6	103.4	157.6	138.4	53.0	156.4	376	77	77	69		1.001	27.171	2813
17	2.672	2.711		0.16	0.16	1.32	1.06	0.25	73	73	69	1.90	1.40	114	0.015	99	100	111.2	0.55	3.12	15.5	104.8	159.8	139.1	52.9	157.8	376	77	77	69		1.001	26.043	2733
18	2.830	2.870		0.16	0.16	1.31	1.06	0.25	73	73	69	1.90	1.40	113	0.015	100	100	110.6	0.55	3.20	15.5	106.6	160.7	141.0	52.9	159.5	376	77	77	69		1.001	26.676	2847
19	2.986	3.029		0.16	0.16	1.30	1.05	0.25	74	74	69	1.92	1.40	113	0.015	98	99	110.1	0.47	3.14	15.5	106.5	160.3	140.9	52.8	159.3	377	77	77	69		1.001	26.189	2792
20	3.143	3.188		0.16	0.16	1.30	1.06	0.25	74	74	69	1.90	1.40	113	0.013	106	107	109.7	0.42	3.24	15.4	104.1	158.4	138.5	52.7	156.8	377	77	77	69		1.001	26.989	2812
21	3.300	3.347		0.16	0.16	1.31	1.06	0.25	74	74	69	1.91	1.40	113	0.015	99	99	109.3	0.42	3.20	15.6	106.7	161.8	140.2	52.7	159.4	377	77	77	69		1.001	26.676	2851
22	3.456	3.506		0.16	0.16	1.31	1.06	0.25	74	74	68	1.91	1.40	113	0.014	102	103	108.8	0.48	3.26	15.4	104.9	159.3	139.0	52.6	157.5	377	77	77	68		1.001	27.197	2857
23	3.614	3.665		0.16	0.16	1.31	1.06	0.25	74	74	68	1.91	1.40	113	0.015	99	99	108.3	0.54	3.21	15.5	106.0	161.0	139.5	52.6	158.6	377	77	78	68		1.001	26.771	2840
24	3.770	3.825		0.16	0.16	1.31	1.06	0.25	74	74	68	1.90	1.40	113	0.015	98	100	107.8	0.44	3.20	15.5	105.4	160.4	139.0	52.5	157.9	377	77	78	68		1.001	26.692	2817
25	3.927	3.983		0.16	0.16	1.31	1.06	0.25	75	75	68	1.91	1.40	112	0.015	99	99	107.5	0.35	3.22	15.5	102.6	157.4	136.7	52.5	155.1	377	77	78	68		1.001	26.851	2759
26	4.064	4.142		0.16	0.16	1.31	1.06	0.25	75	75	68	1.90	1.40	112	0.015	99	99	107.1	0.44	3.20	15.6	105.0	158.4	139.4	52.5	157.5	377	77	78	68		1.001	26.689	2805
27	4.241	4.302		0.16	0.16	1.31	1.06	0.25	75	75	68	1.92	1.40	112	0.014	102	103	106.5	0.59	3.18	15.5	106.2	159.8	140.2	52.5	158.6	377	77	78	68		1.001	26.520	2819
28	4.398	4.461		0.16	0.16	1.31	1.06	0.25	75	75	68	1.92	1.40	112	0.014	102	103	106.1	0.38	3.26	15.5	106.4	160.2	140.4	52.4	158.8	377	77	78	68		1.001	27.163	2893
29	4.555	4.620		0.16	0.16	1.30	1.06	0.25	75	75	68	1.92	1.40	112	0.015	99	99	105.5	0.55	3.18	15.4	103.3	157.6	137.4	52.4	155.7	376	77	78	68		1.001	26.520	2743
30	4.712	4.780		0.16	0.16	1.31	1.06	0.25	75	75	68	1.91	1.40	112	0.015	99	100	105.2	0.38	3.14	15.4	103.9	157.5	138.2	52.4	156.3	376	77	78	68		1.001	26.200	2725
31	4.869	4.938		0.16	0.16	1.31	1.05	0.25	76	75	68	1.91	1.40	111	0.015	98	98	104.9	0.29	3.20	15.5	104.0	157.7	138.4	52.4	156.4	375	77	78	68		1.001	26.689	2778
32	5.026	5.098		0.16	0.16	1.31	1.06	0.25	76	76	68	1.90	1.40	111	0.014	102	103	104.3	0.61	3.23	15.5	103.9	159.0	137.7	52.4	156.4	375	77	78	68		1.001	26.951	2805
33	5.184	5.257		0.16	0.16	1.31	1.06	0.25	76	76	67	1.92	1.40	111	0.015	99	99	103.9	0.35	3.17	15.3	106.2	160.9	139.5	52.4	158.6	376	77	78	67		1.001	26.426	2809
34	5.341	5.416		0.16	0.16	1.30	1.06	0.25	76	76	67	1.91	1.40	111	0.015	98	99	103.3	0.56	3.14	15.4	104.1	157.9	138.3	52.4	156.5	376	77	78	67		1.001	26.211	2733
35	5.498	5.576		0.16	0.16	1.30	1.06	0.25	76	76	67	1.90	1.40	111	0.014	102	103	103.1	0.27	3.14	15.5	106.2	160.1	140.1	52.4	158.6	376	77	77	67		1.001	26.204	2785
36	5.655	5.735		0.16	0.16	1.31	1.06	0.25	76	76	67	1.91	1.40	111	0.015	98	99	102.6	0.50	3.22	15.4	104.1	157.5	138.4	52.4	156.4	375	77	77	67		1.001	26.853	2798
37	5.812	5.894		0.16	0.16	1.31	1.06	0.25	76	76	67	1.90	1.40	110	0.015	98	99	102.0	0.58	3.24	15.4	102.8	156.8	137.4	52.4	155.3	375	77	77	67		1.001	27.016	2781
38	5.970	6.054		0.16	0.16	1.31	1.06	0.25	77	76	67	1.92	1.40	111	0.015	99	100	101.7	0.34	3.24	15.5	104.3	158.7	138.3	52.5	156.8	377	77	77	67		1.001	27.017	2821
39	6.127	6.213		0.16	0.16	1.30	1.06	0.25	77	77	67	1.92	1.40	112	0.015	98	99	101.4	0.31	3.12	15.4	105.1	158.9	139.5	52.6	157.8	378	77	77	67		1.001	26.042	2741
40	6.284	6.372		0.16	0.16	1.31	1.06	0.25	77	77	67	1.92	1.40	111	0.016	95	96	100.8	0.54	3.20	15.5	104.8	159.5	139.0	52.7	157.5	378	77	77	67		1.001	26.701	2801
41	6.442	6.532		0.16	0.16	1.31	1.06	0.25	77	77	67	1.91	1.40	111	0.015	99	99	100.6	0.26	3.15	15.5	102.6	157.1	137.0	52.7	155.2	376	77	77	67		1.001	26.227	2693
42	6.599	6.691		0.16	0.16	1.31	1.06	0.25	77	77	67	1.92	1.40	110	0.015	98	99	99.9	0.70	3.20	15.5	103.3	157.9	137.7	52.7	156.0	375	77	77	67		1.001	26.689	2760
43	6.757	6.851		0.16	0.16	1.31	1.06	0.25	77	77	67	1.91	1.40	111	0.015	99	99	99.5	0.35	3.18	15.5	102.4	156.6	137.0	52.8	155.2	377	77	77	67		1.001	26.557	2723
44	6.915	7.010		0.16	0.16	1.30	1.05	0.25	77	77	67	1.91	1.40	111	0.015	99	99	99.2	0.32	3.28	15.4	104.0	158.9	138.1	52.7	156.8	377	77	77	67		1.001	27.339	2847
45	7.072	7.169		0.16	0.16	1.30	1.06	0.25	77	77	67	1.93	1.40	111	0.009	127	127	98.7	0.47	3.18	15.5	104.2	157.9	138.9	52.7	156.9	377	76	77	67		1.001	26.529	2768
46	7.229	7.329		0.16	0.16	1.31	1.06	0.25	77	77	67	1.92	1.40	112	0.015	98	99	98.3	0.46	3.10	15.5	101.6	155.7	136.5	52.6	154.2	379	76	77	67		1.001	25.884	2633

Elapsed Time	Particulate Sampling Data																	Fuel Weight, lb		Flow, gpm		Temperature Data, oF												
	Gas Meter Cubic Feet (1)	Gas Meter Cubic Feet (2)	Gas Meter Cubic Feet (amb)	Sample Rate, cfm (1)	Sample Rate, cfm (2)	Orifice dH (1)	Orifice dH (2)	Orifice dH (amb)	Meter oF (1)	Meter oF (2)	Meter oF (amb)	Meter Vac. in. Hg. (1)	Meter Vac. in. Hg. (2)	Dilution Tunnel Temp.	Dilution Tunnel dP	Pro. Rate (%) (1)	Pro. Rate (%) (2)	Scale Reading	Weight Change	Load Side Liquid Flow Rate	Boiler Side Liquid Flow Rate (optional)	Thermopile ΔT	Boiler to Heat Exch. Temp.	Heat Exch to Boiler Temp.	Inlet Load Temp.	Outlet Load Temp.	Stack	Filter (1)	Filter (2)	Ambient		Specific Heat of Inlet Water (BTU/lb-°F)	Mass Flow Rate of Inlet Water (lb/min)	Heat Output, Btu
47	7.386	7.459		0.16	0.16	1.31	1.05	0.25	77	77	67	1.93	1.40	112	0.015	98	99	97.9	0.36	3.20	15.5	100.7	157.6	136.5	52.6	153.3	378	76	77	67		1.001	26.684	2690
48	7.543	7.648		0.16	0.16	1.31	1.06	0.25	77	77	67	1.93	1.40	113	0.016	95	96	97.4	0.50	3.17	15.5	101.9	157.5	136.4	52.6	154.5	378	76	77	67		1.001	26.434	2697
49	7.702	7.808		0.16	0.16	1.31	1.06	0.25	78	77	67	1.92	1.50	113	0.014	103	103	97.0	0.36	3.18	15.4	102.4	157.6	136.3	52.7	155.1	378	76	77	67		1.001	26.517	2719
50	7.859	7.967		0.16	0.16	1.30	1.06	0.25	78	77	66	1.94	1.50	113	0.014	102	102	96.6	0.40	3.20	15.5	102.1	157.4	136.3	52.7	154.8	377	76	77	66		1.001	26.684	2728
51	8.016	8.126		0.16	0.16	1.31	1.05	0.25	78	77	66	1.93	1.50	112	0.014	101	102	96.3	0.36	3.20	15.4	103.2	157.1	136.1	52.6	155.8	377	76	77	66		1.001	26.654	2757
52	8.173	8.286		0.16	0.16	1.30	1.06	0.25	78	77	66	1.94	1.50	112	0.014	101	103	95.9	0.37	3.18	15.5	102.1	156.9	136.2	52.5	154.6	376	76	77	66		1.001	26.518	2711
53	8.331	8.444		0.16	0.16	1.31	1.05	0.25	78	77	66	1.93	1.50	112	0.014	102	102	95.5	0.40	3.14	15.5	102.3	156.7	136.1	52.5	154.8	375	76	76	66		1.001	26.184	2682
54	8.488	8.603		0.16	0.16	1.31	1.05	0.25	78	78	66	1.92	1.50	112	0.014	101	102	95.0	0.53	3.16	15.5	102.9	156.4	136.0	52.4	155.3	375	76	76	66		1.001	26.351	2715
55	8.647	8.763		0.16	0.16	1.31	1.05	0.25	78	78	66	1.93	1.50	112	0.014	103	103	94.5	0.47	3.18	15.4	102.5	156.4	135.9	52.3	154.8	374	76	76	66		1.001	26.518	2721
56	8.804	8.922		0.16	0.16	1.30	1.05	0.25	78	78	66	1.94	1.50	112	0.015	98	99	94.2	0.36	3.17	15.5	102.7	155.5	135.9	52.5	155.2	374	76	76	66		1.001	26.434	2718
57	8.962	9.081		0.16	0.16	1.31	1.05	0.25	78	78	66	1.92	1.50	111	0.015	99	99	93.7	0.47	3.12	15.4	102.1	154.9	135.8	52.6	154.7	373	76	76	66		1.001	26.017	2660
58	9.119	9.241		0.16	0.16	1.31	1.05	0.25	78	78	66	1.94	1.50	112	0.015	98	99	93.3	0.36	3.22	15.4	100.6	154.3	135.8	52.7	153.3	373	76	76	66		1.001	26.891	2708
59	9.277	9.399		0.16	0.16	1.31	1.05	0.25	78	78	66	1.94	1.50	111	0.014	102	101	92.8	0.55	3.18	15.5	101.3	156.3	135.5	52.6	153.9	373	75	76	66		1.001	26.532	2690
60	9.435	9.559		0.16	0.16	1.32	1.05	0.25	78	78	66	1.92	1.50	111	0.014	102	103	92.4	0.34	3.18	15.4	102.6	156.9	136.7	52.5	155.1	371	75	76	66		1.001	26.535	2725
61	9.595	9.718		0.16	0.16	1.32	1.05	0.25	78	78	66	1.90	1.50	111	0.015	100	99	92.0	0.40	3.22	15.5	102.5	156.7	136.7	52.4	154.9	370	76	76	66		1.001	26.858	2757
62	9.754	9.877		0.16	0.16	1.32	1.05	0.25	78	78	66	1.91	1.50	111	0.015	99	99	91.4	0.63	3.20	15.5	100.0	153.7	135.0	52.4	152.4	369	77	76	66		1.001	26.695	2674
63	9.912	10.038		0.16	0.16	1.31	1.05	0.25	78	78	66	1.91	1.50	110	0.014	102	103	91.3	0.05	3.12	15.5	101.4	155.2	136.1	52.3	153.7	368	77	76	66		1.001	26.054	2646
64	10.070	10.196		0.16	0.16	1.31	1.05	0.25	78	78	66	1.92	1.50	110	0.014	102	101	90.8	0.50	3.14	15.5	99.6	153.9	134.0	52.3	151.9	367	77	76	66		1.001	26.215	2613
65	10.229	10.355		0.16	0.16	1.32	1.06	0.25	78	78	66	1.91	1.50	110	0.014	103	102	90.4	0.46	3.15	15.5	98.7	153.1	133.5	52.3	151.0	367	77	76	66		1.001	26.248	2593
66	10.387	10.515		0.16	0.16	1.32	1.05	0.25	78	78	66	1.91	1.50	110	0.015	98	99	89.8	0.54	3.17	15.5	99.8	153.5	134.7	52.3	152.1	367	76	75	66		1.001	26.415	2638
67	10.545	10.674		0.16	0.16	1.33	1.05	0.25	78	78	66	1.90	1.50	111	0.015	99	99	89.6	0.23	3.14	15.5	100.5	154.6	135.2	52.3	152.8	367	76	75	66		1.001	26.210	2638
68	10.704	10.833		0.16	0.16	1.32	1.05	0.25	78	78	66	1.91	1.50	111	0.014	103	102	89.1	0.54	3.07	15.3	100.5	153.6	135.6	52.3	152.7	370	76	75	66		1.001	25.570	2572
69	10.863	10.993		0.16	0.16	1.32	1.05	0.25	78	78	66	1.92	1.50	112	0.015	99	99	88.6	0.47	3.09	15.5	100.7	154.5	135.5	52.3	152.9	371	76	75	66		1.001	25.730	2593
70	11.022	11.151		0.16	0.16	1.32	1.05	0.25	78	78	66	1.91	1.50	112	0.015	99	98	88.3	0.35	3.01	15.5	98.7	152.0	134.4	52.3	150.9	371	76	75	66		1.001	25.084	2478
71	11.180	11.311		0.16	0.16	1.31	1.06	0.25	78	78	66	1.90	1.50	112	0.016	95	96	87.9	0.40	1.98	15.5	101.7	154.2	142.9	52.4	154.1	371	76	75	66		1.001	16.520	1682
72	11.338	11.470		0.16	0.16	1.32	1.04	0.25	78	78	66	1.93	1.50	113	0.015	99	99	87.2	0.65	2.00	15.5	101.6	154.5	143.1	52.6	154.2	372	76	75	66		1.001	16.682	1697
73	11.497	11.628		0.16	0.16	1.32	1.05	0.25	78	78	66	1.91	1.50	113	0.014	103	102	87.0	0.23	2.19	15.4	101.2	154.6	141.5	52.7	153.9	373	75	75	66		1.001	18.300	1853
74	11.655	11.788		0.16	0.16	1.32	1.05	0.25	78	78	66	1.92	1.50	112	0.014	102	103	86.4	0.60	2.21	15.4	100.7	154.1	141.2	52.8	153.4	373	75	75	66		1.001	18.460	1860
75	11.814	11.946		0.16	0.16	1.32	1.04	0.25	78	78	66	1.92	1.50	112	0.016	96	95	86.1	0.23	2.56	15.5	102.1	156.0	140.6	52.8	154.9	371	75	75	66		1.001	21.367	2184
76	11.973	12.105		0.16	0.16	1.33	1.05	0.25	78	78	66	1.91	1.50	112	0.015	99	99	85.6	0.50	2.54	15.4	100.1	153.8	139.0	52.9	153.0	369	75	75	66		1.001	21.202	2124
77	12.132	12.265		0.16	0.16	1.32	1.04	0.25	78	78	66	1.91	1.50	111	0.016	96	96	85.2	0.47	2.58	15.6	102.1	155.7	140.9	52.9	155.0	367	76	75	66		1.001	21.522	2200
78	12.290	12.423		0.16	0.16	1.32	1.04	0.25	78	78	66	1.91	1.50	111	0.014	102	101	85.0	0.20	2.54	15.4	101.4	155.1	140.2	52.9	154.3	365	76	76	66		1.001	21.196	2151
79	12.449	12.582		0.16	0.16	1.31	1.05	0.25	78	78	66	1.92	1.50	111	0.014	103	102	84.3	0.71	2.52	15.5	101.1	154.6	140.0	53.0	154.0	364	76	76	66		1.001	21.032	2128
80	12.607	12.741		0.16	0.16	1.32	1.04	0.25	78	78	66	1.93	1.50	111	0.016	95	95	83.9	0.32	2.60	15.4	102.3	157.1	140.5	53.1	155.3	363	76	76	66		1.001	21.681	2220
81	12.766	12.899		0.16	0.16	1.32	1.04	0.25	78	78	66	1.92	1.50	111	0.014	103	101	83.7	0.26	2.44	15.4	101.7	155.9	140.8	53.3	155.0	364	76	76	66		1.001	20.383	2076
82	12.924	13.058		0.16	0.16	1.32	1.04	0.25	78	78	67	1.93	1.50	111	0.014	102	102	83.1	0.53	2.52	15.5	101.0	155.6	140.1	53.4	154.4	363	76	76	67		1.001	21.028	2126
83	13.083	13.216		0.16	0.16	1.32	1.04	0.25	79	78	67	1.91	1.50	111	0.014	102	101	82.7	0.46	2.56	15.5	101.9	156.0	141.2	53.4	155.3	362	76	76	67		1.001	21.351	2178
84	13.242	13.374		0.16	0.16	1.32	1.04	0.25	79	78	67	1.91	1.50	111	0.015	99	98	82.3	0.34	2.62	15.5	101.3	155.7	140.7	53.5	154.8	361	76	76	67		1.001	21.838	2215
85	13.401	13.533		0.16	0.16	1.32	1.04	0.25	79	78	67	1.91	1.50	112	0.014	103	102	81.9	0.42	2.58	15.5	101.2	155.6	140.6	53.5	154.7	360	76	76	67		1.001	21.509	2179
86	13.559	13.691		0.16	0.16	1.32	1.04	0.25	79	78	67	1.92	1.50	112	0.015	98	98	81.6	0.34	2.54	15.6	101.9	157.0	141.1	53.6	155.5	360	76	76	67		1.001	21.153	2159
87	13.718	13.850		0.16	0.16	1.32	1.04	0.25	79	78	67	1.92	1.50	112	0.015	99	99	81.1	0.47	2.52	15.4	103.0	157.8	142.2	53.6	156.6	360	76	76	67		1.001	21.039	2171
88	13.876	14.008		0.16	0.16	1.31	1.04	0.25	79	78	67	1.93	1.50	111	0.013	106	105	80.6	0.50	2.47	15.5	103.4	157.8	142.5	53.5	156.9	359	76	76	67		1.001	20.557	2128
89	14.034	14.166		0.16	0.16	1.32	1.04	0.25	79	78	67	1.92	1.50	112	0.016	95	95	80.2	0.42	2.44	15.5	101.9	156.1	141.5	53.5	155.4	359	76	76	67		1.001	20.383	2080
90	14.193	14.325		0.16	0.16	1.32	1.04	0.25	79	78	67	1.92	1.50	112	0.014	103	102	79.9	0.29	2.56	15.5	102.2	156.9	141.3	53.5	155.7	359	77	76	67		1.001	21.349	2185
91	14.351	14.483		0.16	0.16	1.32	1.04	0.25	79	78	67	1.91	1.50	112	0.016	95	95	79.5	0.43	2.60	15.5	104.4	159.6	142.8	53.4	157.8	360	77	77	67		1.001	21.676	2266
92	14.511	14.642		0.16	0.16	1.32	1.04	0.25	79	78	67	1.93	1.50	113	0.016	97	96	79.0	0.45	2.54	15.5	102.4	156.7	141.3	53.4	155.8	362	77	77	67		1.001	21.184	2172
93	14.670	14.799		0.16	0.16	1.32	1.03	0.25	79	78	67	1.93	1.50	113	0.015	99	97	78.6	0.39	2.58	15.5	104.4	158.8	143.1	53.3	157.7	364	77	77	67		1.001	21.507	2248
94	14.828	14.957		0.16	0.16	1.31	1.04	0.25	79	78	67	1.93	1.50	113	0.015	99	98	78.2	0.45	2.54	15.5	104.7	159.1	143.2	53.2	158.0	364	77	77	67		1.001	21.159	2222
95	14.986	15.116		0.16	0.16	1.32	1.03	0.25	79	79	67	1.94	1.50	113	0.015	99	99	77.7	0.46	2.48	15.5	103.3	157.5	142.1	53.2	156.5	364	77	77	67		1.001	20.703	2141
96	15.145	15.274		0.16	0.16	1.31	1.04	0.25	79	79	67	1.93	1.50	113	0.014	103	101	77.4	0.30	2.56	15.6	105.0	159.4	143.3	53.2	158.2	364	77	77	67		1.001	21.352	2245
97	15.303	15.433		0.16	0.16	1.32	1.04	0.25	79	79	67	1.93	1.50	113	0.016	95	95	77.0	0.45	2.52	15.5	105.3	159.8	143.6	53.3	158.6	365	77	77	67		1.001	21.029	2217
98	15.462	15.590		0.16	0.16	1.32	1.04	0.25	79	79	67	1.93	1.50	113	0.015	99	97	76.5	0.47	2.58	15.5	107.5	162.3	145.8	53.4	160.9	365	77	77	67		1.001	21.508	2315
99	15.620	15.748		0.16	0.16	1.32	1.04	0.25	79	79	67	1.92	1.50	113	0.015	99	98	76.0	0.49	2.56	15.5	105.4	160.0	144.1	53.5	158.9	366	77	77	67		1.001	21.355	2253
100	15.780	15.906		0.16	0.16	1.32	1.03	0.25	79	79	67	1.92	1.50	113	0.015	100	98	75.6	0.46	2.52	15.5	105.7	160.4	144.4	53.6	159.3	367	77	77	67		1.001	21.029	2225
101	15.938	16.064		0.16	0.16	1.32	1.03	0.25	79	79	68	1.93	1.50	114	0.016	95	95	75.5	0.13	2.58	15.5	106.1	160.8	144.9	53.6	159.7	368	77	77	68		1.001	21.510	2285
102	16.097	16.222		0.16	0.16	1.31	1.03	0.25	79	79	68	1.94	1.50	114	0.015	99	98	74.9	0.59	2.54	15.5	104.9	159.9	143.8	53.7	158.6	367	78	78	68		1.001	21.180	2224
103	16.255	16.379		0.16	0.16	1.32	1.03	0.25	79	79	68	1.92	1.50	114	0.015	99	97	74.2	0.64	2.54	15.5	104.9	160.6	143.3	53.7	158.5	367	78	78	68		1.001	21.192	2225
104	16.414	16.537		0.16	0.16	1.32	1.03	0.25	79	79	68	1.92	1.50	113	0.015	99	98	74.0	0.22	2.94	15.5	103.2	158.2	139.8	53.6	156.8	366	78	78	68		1.001	24.474	2528
105	16.572	16.695		0.16	0.16	1.32	1.03	0.25	79	79	67	1.94	1.50	113	0.015	99	98	73.5	0.46	2.91	15.4	107.7	162.3	143.8	53.5	161.2	365	78	78	67		1.001	24.285	2618
106	16.731	16.853		0.16	0.16	1.32	1.03	0.25	79	79	68	1.93	1.50	113	0.015	99	98	73.2	0.30	2.96	15.5	107.3	162.7	143.0	53.4	160.7	363	78	78	68		1.001	24.862	2671
107	16.890	17.011		0.16	0.16	1.32	1.03	0.25	79	79	68	1.92	1.50	113	0.016	96	95	72.9	0.37	2.99	15.5	105.9	161.3	141.6	53.3	159.2	361	78	78	68		1.001	24.908	2642
108	17.049	17.168		0.16	0.16	1.31	1.03	0.25	79	79	68	1.92	1.50	113	0.014	103	101	72.4	0.43	2.99	15.5	104.8	159.4	140.8	53.2	158.0	359	78	78	68		1.001	24.902	2613

Elapsed Time	Particulate Sampling Data																	Fuel Weight, lb		Flow, gpm		Temperature Data, oF												
	Gas Meter Cubic Feet (1)	Gas Meter Cubic Feet (2)	Gas Meter Cubic Feet (amb)	Sample Rate, cfm (1)	Sample Rate, cfm (2)	Orifice dH (1)	Orifice dH (2)	Orifice dH (amb)	Meter oF (1)	Meter oF (2)	Meter oF (amb)	Meter Vac. in. Hg. (1)	Meter Vac. in. Hg. (2)	Dilution Tunnel Temp.	Dilution Tunnel dP	Pro. Rate (%) (1)	Pro. Rate (%) (2)	Scale Reading	Weight Change	Load Side Liquid Flow Rate	Boiler Side Liquid Flow Rate (optional)	Thermopile ΔT	Boiler to Heat Exch. Temp.	Heat Exch to Boiler Temp.	Inlet Load Temp.	Outlet Load Temp.	Stack	Filter (1)	Filter (2)	Ambient		Specific Heat of Inlet Water (BTU/lb-°F)	Mass Flow Rate of Inlet Water (lb/min)	Heat Output, Btu
109	17.208	17.327		0.16	0.16	1.32	1.03	0.25	79	79	68	1.92	1.50	113	0.014	103	102	72.1	0.37	2.97	15.5	106.5	161.4	141.9	53.2	159.7	359	78	78	68		1.001	24.745	2639
110	17.366	17.484		0.16	0.16	1.31	1.03	0.25	79	79	68	1.92	1.50	113	0.015	99	97	71.6	0.51	2.97	15.5	105.7	160.7	141.4	53.1	158.9	358	78	78	68		1.001	24.741	2619
111	17.525	17.642		0.16	0.16	1.31	1.03	0.25	79	79	68	1.93	1.50	113	0.014	103	101	71.2	0.35	3.03	15.5	104.0	158.8	139.9	53.1	157.1	358	78	78	68		1.001	25.225	2627
112	17.683	17.800		0.16	0.16	1.32	1.03	0.25	79	79	68	1.92	1.50	113	0.014	102	101	70.9	0.37	3.01	15.3	102.5	156.9	138.9	53.1	155.6	358	78	78	68		1.001	25.061	2573
113	17.842	17.958		0.16	0.16	1.32	1.03	0.25	79	79	68	1.92	1.50	113	0.015	99	98	70.4	0.47	2.99	15.5	104.4	159.2	140.1	53.0	157.5	358	78	78	68		1.001	24.898	2603
114	18.000	18.117		0.16	0.16	1.32	1.07	0.25	79	79	68	1.93	1.60	113	0.015	99	99	70.1	0.29	2.97	15.5	104.8	159.4	140.4	53.0	157.8	357	78	78	68		1.001	24.734	2596
115	18.159	18.277		0.16	0.16	1.32	1.07	0.25	79	79	68	1.94	1.60	113	0.015	99	99	69.5	0.56	3.02	15.5	103.1	157.2	139.4	53.0	156.2	356	78	78	68		1.001	25.211	2603
116	18.319	18.438		0.16	0.16	1.32	1.07	0.25	79	79	68	1.92	1.60	113	0.015	100	100	69.1	0.39	3.03	15.5	106.6	161.8	141.7	53.0	159.6	356	78	78	68		1.001	25.267	2696
117	18.477	18.599		0.16	0.16	1.32	1.07	0.25	80	79	68	1.92	1.60	113	0.016	95	97	68.9	0.27	2.94	15.5	103.9	158.1	140.1	53.2	157.0	355	78	78	68		1.001	24.513	2549
118	18.636	18.759		0.16	0.16	1.32	1.06	0.25	80	79	68	1.92	1.60	112	0.016	96	96	68.3	0.53	2.91	15.5	102.4	157.2	138.8	53.3	155.7	355	78	78	68		1.001	24.258	2486
119	18.794	18.919		0.16	0.16	1.31	1.06	0.25	80	80	68	1.94	1.60	112	0.015	98	99	68.0	0.36	2.99	15.5	104.9	159.9	140.8	53.3	158.3	354	78	78	68		1.001	24.902	2616
120	18.953	19.080		0.16	0.16	1.31	1.07	0.25	80	80	68	1.93	1.60	112	0.015	99	100	67.5	0.46	3.03	15.4	103.1	158.3	139.3	53.3	156.4	353	78	78	68		1.001	25.226	2604
121	19.111	19.241		0.16	0.16	1.32	1.06	0.25	80	80	68	1.93	1.60	113	0.016	95	96	67.0	0.53	3.01	15.5	104.9	159.1	141.3	53.4	158.2	356	78	78	68		1.001	25.066	2632
122	19.270	19.401		0.16	0.16	1.32	1.06	0.25	80	80	68	1.94	1.60	113	0.015	99	99	66.6	0.35	3.01	15.6	103.9	158.4	140.4	53.3	157.2	358	78	79	68		1.001	25.069	2607
123	19.429	19.561		0.16	0.16	1.32	1.07	0.25	80	80	68	1.93	1.60	113	0.015	99	99	66.1	0.50	2.93	15.5	101.8	156.6	138.2	53.2	155.0	358	78	79	68		1.001	24.420	2489
124	19.588	19.722		0.16	0.16	1.32	1.06	0.25	80	80	68	1.93	1.60	112	0.015	99	100	65.8	0.33	2.89	15.4	101.1	155.5	137.7	53.2	154.3	358	78	79	68		1.001	24.095	2440
125	19.747	19.882		0.16	0.16	1.32	1.06	0.25	80	80	68	1.95	1.60	114	0.015	99	99	65.3	0.48	2.97	15.6	103.1	157.0	139.7	53.1	156.3	363	79	79	68		1.001	24.742	2555
126	19.905	20.041		0.16	0.16	1.31	1.06	0.25	80	80	69	1.95	1.60	115	0.014	102	102	64.8	0.49	2.89	15.5	106.9	162.0	142.3	53.1	160.0	376	79	79	69		1.001	24.094	2579
127	20.064	20.202		0.16	0.16	1.32	1.06	0.25	80	80	69	1.95	1.60	115	0.015	99	100	64.2	0.63	2.97	15.5	102.1	156.7	138.3	53.0	155.2	380	79	79	69		1.001	24.750	2531
128	20.222	20.362		0.16	0.16	1.31	1.06	0.25	80	80	68	1.94	1.60	116	0.015	99	99	63.8	0.41	2.97	15.4	106.5	161.1	142.0	53.0	159.5	381	79	79	68		1.001	24.730	2637
129	20.380	20.521		0.16	0.16	1.32	1.06	0.25	80	80	69	1.95	1.60	116	0.015	99	99	63.1	0.72	2.92	15.5	105.5	160.8	140.8	53.0	158.5	382	79	79	69		1.001	24.319	2570
130	20.539	20.682		0.16	0.16	1.32	1.05	0.25	80	80	68	1.95	1.60	116	0.015	99	100	62.6	0.46	2.99	15.5	102.0	156.1	138.3	53.0	155.0	382	79	79	68		1.001	24.902	2542
131	20.698	20.841		0.16	0.16	1.32	1.05	0.25	80	80	68	1.95	1.60	116	0.015	99	99	62.1	0.49	2.97	15.5	103.1	157.4	139.2	53.0	156.1	383	79	79	68		1.001	24.744	2555
132	20.857	21.000		0.16	0.16	1.32	1.05	0.25	80	80	68	1.95	1.60	117	0.015	99	99	61.6	0.51	2.97	15.5	105.5	160.3	141.0	52.9	158.4	384	79	79	68		1.001	24.746	2613
133	21.016	21.160		0.16	0.16	1.32	1.04	0.25	80	80	69	1.95	1.60	116	0.015	99	99	61.3	0.32	3.03	15.5	104.3	158.6	140.1	52.8	157.1	384	79	79	69		1.001	25.229	2634
134	21.174	21.318		0.16	0.16	1.30	1.04	0.25	80	80	69	1.94	1.60	116	0.015	99	98	60.6	0.70	2.95	15.5	104.5	158.5	140.1	52.7	157.2	384	79	79	69		1.001	24.584	2573
135	21.332	21.476		0.16	0.16	1.31	1.05	0.25	80	80	69	1.94	1.60	116	0.015	99	99	60.1	0.56	2.95	15.4	102.7	156.9	138.5	52.7	155.4	384	79	79	69		1.001	24.583	2527
136	21.491	21.636		0.16	0.16	1.31	1.04	0.25	80	80	69	1.95	1.60	116	0.016	96	95	59.5	0.57	2.97	15.6	102.7	156.9	138.6	52.7	155.4	384	79	79	69		1.001	24.741	2544
137	21.649	21.795		0.16	0.16	1.32	1.04	0.25	80	80	69	1.95	1.60	116	0.015	99	99	59.0	0.51	3.03	15.5	103.7	158.1	139.4	52.9	156.5	384	79	79	69		1.001	25.224	2618
138	21.808	21.954		0.16	0.16	1.32	1.04	0.25	80	80	69	1.94	1.60	116	0.015	99	99	58.5	0.46	3.01	15.5	105.7	160.3	141.1	52.9	158.6	383	79	79	69		1.001	25.066	2653
139	21.967	22.111		0.16	0.16	1.32	1.03	0.25	80	80	68	1.95	1.70	116	0.016	96	94	58.1	0.36	2.91	15.5	104.7	160.0	139.9	52.9	157.6	385	79	79	68		1.001	24.294	2547
140	22.126	22.270		0.16	0.16	1.31	1.04	0.25	80	80	68	1.95	1.60	114	0.014	103	102	57.4	0.74	2.99	15.5	103.8	158.5	139.3	52.9	156.7	387	79	79	68		1.001	24.940	2591
141	22.284	22.428		0.16	0.16	1.31	1.03	0.25	80	80	68	1.96	1.70	114	0.015	98	98	56.9	0.47	2.89	15.5	104.0	158.1	139.9	52.9	156.9	382	79	79	68		1.001	24.109	2510
142	22.443	22.585		0.16	0.16	1.31	1.03	0.25	80	80	68	1.96	1.70	115	0.015	99	97	56.4	0.50	2.97	15.5	105.6	160.5	140.9	52.9	158.4	385	79	79	68		1.001	24.741	2615
143	22.601	22.743		0.16	0.16	1.31	1.03	0.25	80	80	68	1.96	1.70	115	0.015	98	98	56.0	0.43	3.06	15.5	106.0	160.0	141.5	52.8	158.8	387	79	79	68		1.001	25.548	2712
144	22.759	22.900		0.16	0.16	1.32	1.03	0.25	80	80	68	1.94	1.70	115	0.014	102	101	55.6	0.41	2.97	15.4	105.1	158.8	140.9	52.7	157.8	388	78	79	68		1.001	24.740	2603
145	22.918	23.059		0.16	0.16	1.32	1.03	0.25	80	80	68	1.94	1.70	115	0.014	103	102	54.9	0.73	2.97	15.5	107.0	161.3	141.9	52.6	159.6	389	78	79	68		1.001	24.743	2649
146	23.076	23.215		0.16	0.16	1.32	1.02	0.25	81	80	68	1.94	1.70	115	0.014	102	100	54.5	0.33	2.99	15.5	106.8	161.4	141.4	52.6	159.4	390	78	79	68		1.001	24.905	2664
147	23.235	23.372		0.16	0.16	1.32	1.02	0.25	81	80	68	1.94	1.70	116	0.015	99	97	54.1	0.47	3.01	15.5	105.6	159.3	140.9	52.5	158.1	392	78	79	68		1.001	25.069	2650
148	23.394	23.529		0.16	0.16	1.31	1.02	0.25	81	80	68	1.95	1.70	115	0.014	102	101	53.4	0.64	2.99	15.4	103.9	157.9	139.2	52.5	156.3	393	78	79	68		1.001	24.905	2590
149	23.552	23.688		0.16	0.16	1.31	1.04	0.25	81	80	67	1.96	1.60	115	0.015	98	99	52.9	0.57	2.95	15.4	106.1	159.8	141.2	52.5	158.5	393	78	79	67		1.001	24.587	2612
150	23.711	23.847		0.16	0.16	1.31	1.04	0.25	81	80	67	1.96	1.60	115	0.016	96	95	52.5	0.38	2.95	15.5	108.1	161.5	143.1	52.4	160.5	393	78	79	67		1.001	24.585	2660
151	23.869	24.005		0.16	0.16	1.31	1.04	0.25	81	80	67	1.96	1.60	115	0.014	102	101	51.9	0.61	2.93	15.5	108.9	162.5	143.5	52.4	161.3	392	78	79	67		1.001	24.445	2665
152	24.027	24.164		0.16	0.16	1.32	1.04	0.25	81	80	67	1.95	1.60	115	0.016	95	95	51.5	0.36	3.02	15.4	107.8	161.7	142.5	52.5	160.3	391	77	79	67		1.001	25.142	2714
153	24.187	24.323		0.16	0.16	1.34	1.08	0.25	81	80	67	1.98	1.80	115	0.015	100	99	51.2	0.34	2.93	15.5	106.5	160.4	141.4	52.6	159.0	391	77	79	67		1.001	24.458	2607
154	24.346	24.484		0.16	0.16	1.33	1.08	0.25	81	80	67	1.98	1.80	115	0.016	96	97	50.7	0.48	2.93	15.4	106.5	160.8	141.7	52.7	159.2	391	77	78	67		1.001	24.427	2605
155	24.506	24.645		0.16	0.16	1.33	1.08	0.25	81	80	67	1.97	1.80	114	0.015	99	100	50.3	0.40	2.99	15.5	107.1	161.8	141.7	52.7	159.8	393	77	78	67		1.001	24.909	2671
156	24.666	24.808		0.16	0.16	1.33	1.08	0.25	81	80	67	1.97	1.80	114	0.015	99	101	49.7	0.57	3.03	15.6	103.8	157.4	139.7	52.7	156.5	387	77	78	67		1.001	25.235	2622
157	24.826	24.969		0.16	0.16	1.33	1.08	0.25	80	80	67	1.97	1.80	114	0.016	96	97	49.1	0.59	2.97	15.4	109.1	163.2	143.8	52.8	161.8	391	77	78	67		1.001	24.751	2703
158	24.985	25.131		0.16	0.16	1.33	1.09	0.25	81	80	67	1.98	1.80	115	0.015	99	100	48.6	0.48	2.97	15.5	106.5	160.9	141.5	52.8	159.2	392	77	78	67		1.001	24.756	2639
159	25.145	25.293		0.16	0.16	1.32	1.09	0.25	80	80	67	1.97	1.80	115	0.014	103	104	48.3	0.31	2.97	15.5	105.8	160.0	141.1	52.7	158.5	393	77	78	67		1.001	24.755	2623
160	25.304	25.455		0.16	0.16	1.32	1.08	0.25	81	80	67	1.99	1.80	116	0.015	99	100	47.9	0.45	2.91	15.5	107.0	160.6	142.3	52.6	159.6	393	77	78	67		1.001	24.273	2600
161	25.463	25.617		0.16	0.16	1.33	1.08	0.25	80	80	66	1.98	1.80	115	0.014	103	104	47.4	0.51	3.01	15.4	109.0	163.1	143.6	52.6	161.5	392	77	78	66		1.001	25.077	2736
162	25.623	25.778		0.16	0.16	1.33	1.08	0.25	80	80	66	1.98	1.80	115	0.015	100	100	46.8	0.56	2.97	15.5	107.2	160.7	142.4	52.5	159.7	392	77	78	66		1.001	24.753	2657
163	25.782	25.940		0.16	0.16	1.33	1.09	0.25	80	80	66	1.98	1.80	115	0.015	99	100	46.5	0.31	2.92	15.5	109.6	163.3	144.4	52.5	162.1	392	76	78	66		1.001	24.317	2669
164	25.942	26.103		0.16	0.16	1.34	1.08	0.25	80	80	66	1.97	1.80	115	0.014	103	105	45.9	0.56	3.00	15.4	108.8	163.1	143.0	52.5	161.2	390	76	78	66		1.001	25.012	2724
165	26.101	26.264		0.16	0.16	1.33	1.08	0.25	80	80	66	1.98	1.80	115	0.015	99	100	45.5	0.42	3.03	15.5	108.8	163.2	142.9	52.4	161.2	388	76	78	66		1.001	25.241	2749
166	26.261	26.426		0.16	0.16	1.33	1.09	0.25	80	80	66	1.99	1.80	114	0.015	100	100	45.2	0.34	2.93	15.4	108.3	162.4	142.8	52.5	160.8	387	76	78	66		1.001	24.432	2650
167	26.421	26.588		0.16	0.16	1.33	1.09	0.25	80	80	66	1.97	1.80	114	0.014	103	104	44.7	0.46	3.01	15.4	108.2	162.3	142.9	52.6	160.8	385	76	78	66		1.001	25.074	2716
168	26.581	26.750		0.16	0.16	1.34	1.08	0.25	80	80	66	1.98	1.80	114	0.015	100	100	44.3	0.42	3.06	15.4	107.8	162.3	142.3	52.7	160.5	384	76	78	66		1.001	25.721	2776
169	26.740	26.911		0.16	0.16	1.33	1.08	0.25	80	80	66	1.98	1.80	114	0.016	96	97	43.8	0.51	2.97	15.4	106.2	160.9	141.0	52.7	158.9	383	76	78	66		1.001	24.754	2631
170	26.900	27.073		0.16	0.16	1.32	1.08	0.25	80	80	66	1.97	1.80	113	0.015	100	100	43.3	0.50	2.91	15.5	109.2	163.6	143.8	52.7	161.9	380	76	77	66		1.001	24.268	2653

Elapsed Time	Particulate Sampling Data																	Fuel Weight, lb		Flow, gpm		Temperature Data, oF													
	Gas Meter Cubic Feet (1)	Gas Meter Cubic Feet (2)	Gas Meter Cubic Feet (amb)	Sample Rate, cfm (1)	Sample Rate, cfm (2)	Orifice dH (1)	Orifice dH (2)	Orifice dH (amb)	Meter oF (1)	Meter oF (2)	Meter oF (amb)	Meter Vac. in. Hg. (1)	Meter Vac. in. Hg. (2)	Dilution Tunnel Temp.	Dilution Tunnel dP	Pro. Rate (%) (1)	Pro. Rate (%) (2)	Scale Reading	Weight Change	Load Side Liquid Flow Rate	Boiler Side Liquid Flow Rate (optional)	Thermopile ΔT	Boiler to Heat Exch. Temp.	Heat Exch to Boiler Temp.	Inlet Load Temp.	Outlet Load Temp.	Stack	Filter (1)	Filter (2)	Ambient		Specific Heat of Inlet Water (BTU/lb-°F)	Mass Flow Rate of Inlet Water (lb/min)	Heat Output, Btu
171	27.059	27.235		0.16	0.16	1.32	1.08	0.25	80	80	66	1.99	1.80	114	0.014	103	104	42.9	0.38	2.93	15.5	107.6	162.5	142.4	52.8	160.4	377	76	77	66		1.001	24.430	2633
172	27.219	27.397		0.16	0.16	1.33	1.08	0.25	80	80	66	1.97	1.80	114	0.015	100	100	42.4	0.48	2.99	15.5	105.3	159.1	140.8	52.8	158.1	376	76	77	66		1.001	24.914	2627
173	27.378	27.558		0.16	0.16	1.33	1.08	0.25	80	80	66	1.99	1.80	114	0.015	99	100	42.0	0.42	3.01	15.5	107.2	160.8	142.4	52.7	159.9	375	76	77	66		1.001	25.078	2690
174	27.537	27.719		0.16	0.16	1.33	1.08	0.25	80	80	66	1.98	1.80	114	0.015	99	100	41.6	0.39	3.03	15.5	107.4	161.1	142.6	52.6	160.1	374	75	77	66		1.001	25.238	2714
175	27.697	27.881		0.16	0.16	1.33	1.08	0.25	80	80	66	1.97	1.80	114	0.017	94	94	41.2	0.39	2.97	15.5	105.4	159.7	140.7	52.6	158.0	372	75	77	66		1.001	24.750	2612
176	27.856	28.044		0.16	0.16	1.33	1.08	0.25	80	80	66	1.99	1.80	113	0.015	99	101	40.7	0.50	3.00	15.5	105.1	158.8	140.5	52.6	157.7	369	75	77	66		1.001	25.031	2635
177	28.016	28.205		0.16	0.16	1.33	1.08	0.25	80	80	66	1.97	1.80	113	0.014	103	103	40.2	0.51	2.99	15.5	105.8	160.2	140.7	52.6	158.4	367	75	77	66		1.001	24.922	2640
178	28.175	28.367		0.16	0.16	1.33	1.08	0.25	80	80	66	1.99	1.80	112	0.016	96	97	40.0	0.20	2.97	15.4	103.1	157.4	138.7	52.6	155.7	365	75	77	66		1.001	24.771	2557
179	28.336	28.529		0.16	0.16	1.33	1.08	0.25	80	80	66	1.98	1.80	112	0.014	104	104	39.5	0.50	2.99	15.5	105.2	159.4	140.5	52.6	157.8	363	75	77	66		1.001	24.922	2624
180	28.495	28.691		0.16	0.16	1.32	1.08	0.25	80	80	66	1.98	1.80	112	0.014	102	104	39.0	0.46	2.95	15.4	106.8	161.2	142.0	52.7	159.5	364	75	77	66		1.001	24.597	2631
181	28.655	28.851		0.16	0.16	1.33	1.07	0.25	80	79	66	1.98	1.80	112	0.015	99	99	38.4	0.60	3.01	15.6	105.2	159.9	140.2	52.7	157.8	362	75	77	66		1.001	25.079	2640
182	28.814	29.013		0.16	0.16	1.32	1.08	0.25	80	80	66	1.98	1.80	112	0.014	102	104	38.1	0.32	2.97	15.5	103.4	157.9	138.9	52.7	156.1	361	75	77	66		1.001	24.755	2563
183	28.973	29.175		0.16	0.16	1.32	1.07	0.25	80	79	66	1.99	1.80	112	0.016	96	97	37.6	0.55	2.97	15.5	104.4	157.9	140.5	52.7	157.2	361	76	77	66		1.001	24.751	2588
184	29.132	29.336		0.16	0.16	1.32	1.07	0.25	80	79	67	1.98	1.80	112	0.014	102	103	37.4	0.21	2.93	15.5	105.8	159.3	141.6	52.7	158.5	360	76	77	67		1.001	24.428	2588
185	29.292	29.496		0.16	0.16	1.32	1.07	0.25	80	79	67	2.00	1.80	112	0.013	107	106	36.8	0.56	2.85	15.4	104.4	158.0	140.5	52.7	157.2	358	76	77	67		1.001	23.786	2487
186	29.451	29.657		0.16	0.16	1.32	1.07	0.25	80	79	67	1.98	1.80	112	0.015	99	100	36.3	0.53	2.99	15.4	103.9	158.3	139.6	52.7	156.7	357	76	77	67		1.001	24.909	2592
187	29.610	29.819		0.16	0.16	1.33	1.07	0.25	80	79	67	1.98	1.80	112	0.015	99	100	36.0	0.27	3.01	15.5	103.5	158.0	139.1	52.7	156.2	355	76	77	67		1.001	25.070	2598
188	29.769	29.979		0.16	0.16	1.33	1.07	0.25	80	79	67	1.99	1.80	111	0.015	99	99	35.6	0.39	2.93	15.5	104.5	158.9	139.9	52.8	157.3	353	76	77	67		1.001	24.464	2560
189	29.929	30.140		0.16	0.16	1.33	1.07	0.25	80	79	67	1.99	1.80	111	0.015	99	100	35.1	0.51	2.95	15.5	102.4	156.6	138.3	52.7	155.2	352	76	77	67		1.001	24.578	2521
190	30.089	30.302		0.16	0.16	1.32	1.07	0.25	80	79	67	2.00	1.80	112	0.016	96	97	34.7	0.42	2.92	15.5	104.2	157.9	140.2	52.8	157.0	350	76	77	67		1.001	24.319	2536
191	30.248	30.462		0.16	0.16	1.33	1.06	0.25	80	79	67	1.98	1.80	111	0.016	96	96	34.4	0.33	2.93	15.5	104.2	158.3	140.3	52.9	157.1	348	76	77	67		1.001	24.457	2551
192	30.407	30.623		0.16	0.16	1.32	1.07	0.25	80	79	67	1.98	1.80	111	0.014	102	103	33.8	0.52	2.87	15.6	104.6	159.0	140.6	53.1	157.6	346	76	77	67		1.001	23.941	2506
193	30.566	30.784		0.16	0.16	1.32	1.07	0.25	80	79	67	2.00	1.80	111	0.014	102	103	33.4	0.40	2.97	15.5	100.7	155.3	137.2	53.1	153.8	343	76	77	67		1.001	24.746	2495
194	30.725	30.945		0.16	0.16	1.32	1.07	0.25	80	79	67	1.98	1.80	111	0.014	102	103	33.0	0.41	3.01	15.4	101.2	155.9	137.7	53.2	154.4	346	76	77	67		1.001	25.070	2540
195	30.884	31.106		0.16	0.16	1.32	1.07	0.25	80	79	67	2.02	1.80	112	0.015	99	100	32.5	0.49	3.01	15.5	99.9	154.2	136.7	53.2	153.1	351	77	77	67		1.001	25.080	2509
196	31.042	31.266		0.16	0.16	1.32	1.06	0.25	80	79	67	2.02	1.80	112	0.015	98	99	32.2	0.29	2.99	15.6	101.1	155.4	137.9	53.2	154.3	354	77	77	67		1.001	24.907	2520
197	31.201	31.427		0.16	0.16	1.32	1.06	0.25	80	79	67	2.01	1.80	113	0.015	99	100	31.6	0.65	2.91	15.4	101.0	155.6	137.8	53.3	154.3	357	77	77	67		1.001	24.259	2454
198	31.360	31.587		0.16	0.16	1.32	1.07	0.25	80	79	67	2.02	1.80	114	0.014	103	103	31.2	0.35	2.93	15.4	102.4	157.0	139.0	53.3	155.7	360	77	77	67		1.001	24.429	2505
199	31.519	31.748		0.16	0.16	1.31	1.07	0.25	80	79	67	2.03	1.80	114	0.015	99	100	30.4	0.83	2.99	15.5	100.7	155.0	137.5	53.2	153.9	363	77	78	67		1.001	24.906	2510
200	31.678	31.909		0.16	0.16	1.31	1.07	0.25	80	79	67	2.01	1.80	115	0.014	103	103	30.2	0.20	2.97	15.5	101.5	155.9	138.3	53.1	154.6	364	77	78	67		1.001	24.773	2517
201	31.836	32.070		0.16	0.16	1.31	1.07	0.25	80	79	67	2.01	1.80	114	0.015	98	100	29.7	0.53	2.92	15.5	101.9	156.7	138.3	53.1	155.0	364	77	78	67		1.001	24.316	2481
202	31.994	32.230		0.16	0.16	1.31	1.07	0.25	80	79	67	2.02	1.80	115	0.014	102	103	29.2	0.51	2.96	15.6	100.4	155.0	137.1	53.0	153.4	367	77	78	67		1.001	24.649	2478
203	32.153	32.391		0.16	0.16	1.32	1.07	0.25	80	80	67	2.01	1.80	115	0.015	99	100	28.8	0.34	2.92	15.5	100.1	154.4	137.0	53.0	153.1	368	77	78	67		1.001	24.370	2443
204	32.311	32.552		0.16	0.16	1.31	1.06	0.25	80	80	68	2.03	1.80	115	0.016	95	97	28.2	0.60	2.91	15.6	101.6	155.6	138.3	53.0	154.6	367	78	78	68		1.001	24.270	2469
205	32.469	32.712		0.16	0.16	1.31	1.06	0.25	80	80	67	2.02	1.80	115	0.015	98	99	28.0	0.25	2.97	15.5	101.5	156.0	138.0	53.0	154.5	365	78	78	67		1.001	24.751	2516
206	32.628	32.872		0.16	0.16	1.31	1.07	0.25	80	80	68	2.02	1.80	114	0.015	99	99	27.3	0.65	2.95	15.5	100.8	155.5	137.1	52.9	153.8	362	78	78	68		1.001	24.588	2483
207	32.786	33.034		0.16	0.16	1.31	1.06	0.25	80	80	67	2.03	1.80	114	0.016	95	97	27.1	0.25	2.89	15.5	100.3	154.5	137.0	52.9	153.3	361	78	78	67		1.001	24.105	2421
208	32.945	33.193		0.16	0.16	1.30	1.07	0.25	80	80	67	2.04	1.80	114	0.016	96	95	26.6	0.49	2.85	15.4	99.3	153.7	136.1	53.0	152.2	359	78	78	67		1.001	23.781	2363
209	33.102	33.354		0.16	0.16	1.31	1.06	0.25	80	80	68	2.03	1.80	114	0.014	101	103	26.1	0.45	2.91	15.5	104.1	158.5	140.3	53.1	157.2	358	78	78	68		1.001	24.259	2529
210	33.261	33.515		0.16	0.16	1.31	1.06	0.25	80	80	68	2.03	1.80	113	0.015	99	100	25.7	0.44	2.89	15.5	101.1	155.5	138.0	53.2	154.3	356	78	78	68		1.001	24.096	2439
211	33.419	33.675		0.16	0.16	1.31	1.06	0.25	80	80	68	2.02	1.80	113	0.016	95	96	25.2	0.50	2.95	15.6	100.8	155.0	138.0	53.3	154.1	354	78	78	68		1.001	24.587	2482
212	33.577	33.835		0.16	0.16	1.31	1.07	0.25	80	80	68	2.02	1.80	113	0.016	95	96	24.9	0.33	2.95	15.5	101.5	156.0	138.4	53.3	154.8	353	78	78	68		1.001	24.593	2500
213	33.736	33.996		0.16	0.16	1.31	1.06	0.25	80	80	68	2.04	1.80	113	0.014	102	103	24.6	0.27	2.92	15.4	99.2	153.8	136.5	53.3	152.5	353	78	78	68		1.001	24.334	2416
214	33.894	34.156		0.16	0.16	1.30	1.06	0.25	80	80	68	2.04	1.80	113	0.015	98	99	24.2	0.42	2.94	15.5	99.3	153.7	136.6	53.3	152.7	354	78	78	68		1.001	24.545	2441
215	34.051	34.316		0.16	0.16	1.30	1.06	0.25	80	80	68	2.03	1.80	113	0.014	101	102	23.8	0.35	2.92	15.5	99.5	154.0	136.8	53.3	152.8	353	78	78	68		1.001	24.364	2427
216	34.209	34.477		0.16	0.16	1.30	1.06	0.25	80	80	68	2.04	1.80	112	0.013	106	107	23.3	0.51	3.03	15.4	100.3	154.6	137.3	53.3	153.5	351	78	78	68		1.001	25.232	2533
217	34.367	34.638		0.16	0.16	1.30	1.06	0.25	80	80	68	2.04	1.80	112	0.014	102	103	22.8	0.46	2.97	15.5	100.4	154.7	137.5	53.2	153.6	350	78	78	68		1.001	24.749	2488
218	34.525	34.798		0.16	0.16	1.30	1.06	0.25	80	80	68	2.03	1.80	112	0.014	102	102	22.3	0.58	2.83	15.5	99.3	153.3	136.6	53.2	152.4	349	78	78	68		1.001	23.613	2347
219	34.683	34.958		0.16	0.16	1.31	1.07	0.25	80	80	68	2.04	1.80	112	0.014	102	102	22.3	0.01	2.93	15.5	99.7	154.3	136.6	53.1	152.8	348	78	78	68		1.001	24.422	2437
220	34.841	35.120		0.16	0.16	1.30	1.07	0.25	80	80	68	2.05	1.80	112	0.016	95	97	21.8	0.47	2.91	15.4	100.0	154.0	137.1	53.1	153.1	348	78	78	68		1.001	24.263	2430
221	34.999	35.279		0.16	0.16	1.29	1.06	0.25	80	80	68	2.05	1.80	112	0.014	102	102	21.3	0.50	2.79	15.5	100.1	154.5	137.6	53.0	153.1	348	78	78	68		1.001	23.287	2334
222	35.156	35.440		0.16	0.16	1.30	1.06	0.25	80	80	68	2.04	1.80	112	0.014	101	103	21.0	0.27	2.97	15.5	99.0	153.2	136.1	53.0	152.0	349	78	78	68		1.001	24.748	2454
223	35.315	35.601		0.16	0.16	1.37	1.07	0.25	80	80	68	2.12	1.80	112	0.015	99	100	20.4	0.66	2.93	15.4	99.4	153.1	136.5	53.0	152.4	349	78	78	68		1.001	24.415	2431
224	35.477	35.761		0.16	0.16	1.37	1.06	0.25	80	80	68	2.12	1.80	112	0.013	108	106	20.1	0.30	2.89	15.6	100.4	154.8	137.0	53.0	153.3	348	78	78	68		1.001	24.088	2421
225	35.639	35.921		0.16	0.16	1.37	1.06	0.25	80	80	68	2.11	1.80	112	0.014	104	102	19.7	0.33	3.00	15.4	100.3	154.9	136.6	52.9	153.2	348	78	78	68		1.001	25.025	2513
226	35.801	36.082		0.16	0.16	1.37	1.06	0.25	80	80	68	2.12	1.80	112	0.014	104	103	19.4	0.39	2.94	15.5	98.4	152.8	135.3	52.9	151.3	348	78	78	68		1.001	24.481	2413
227	35.963	36.242		0.16	0.16	1.36	1.06	0.25	80	80	68	2.14	1.80	112	0.014	104	102	19.1	0.23	2.95	15.5	98.6	153.2	135.4	52.9	151.6	349	79	78	68		1.001	24.581	2428
228	36.125	36.402		0.16	0.16	1.36	1.07	0.25	80	80	68	2.11	1.80	112	0.015	101	99	18.6	0.55	2.97	15.4	99.0	153.3	136.0	53.0	152.1	350	79	78	68		1.001	24.745	2454
229	36.286	36.563		0.16	0.16	1.36	1.07	0.25	80	80	68	2.13	1.80	112	0.014	104	103	18.2	0.35	3.01	15.5	98.8	153.6	135.7	53.1	151.9	351	79	79	68		1.001	25.067	2479
230	36.448	36.724		0.16	0.16	1.37	1.06	0.25	80	80	68	2.12	1.80	112	0.016	98	96	17.8	0.41	2.91	15.5	98.1	152.4	135.7	53.2	151.3	351	79	79	68		1.001	24.268	2382
231	36.610	36.884		0.16	0.16	1.37	1.06	0.25	80	80	68	2.12	1.80	112	0.016	98	96	17.4	0.37	2.79	15.5	100.7	154.8	138.8	53.3	154.0	350	79	78	68		1.001	23.289	2349
232	36.771	37.044		0.16	0.16	1.36	1.06	0.25	80	80	68	2.13	1.80	112	0.014	104	102	17.0	0.42	2.83	15.5	98.9	153.3	137.2	53.3	152.2	352	79	78	68		1.001	23.610	2338

Elapsed Time	Particulate Sampling Data																	Fuel Weight, lb		Flow, gpm		Temperature Data, oF												
	Gas Meter Cubic Feet (1)	Gas Meter Cubic Feet (2)	Gas Meter Cubic Feet (amb)	Sample Rate, cfm (1)	Sample Rate, cfm (2)	Orifice dH (1)	Orifice dH (2)	Orifice dH (amb)	Meter oF (1)	Meter oF (2)	Meter oF (amb)	Meter Vac. in. Hg. (1)	Meter Vac. in. Hg. (2)	Dilution Tunnel Temp.	Dilution Tunnel dP	Pro. Rate (%) (1)	Pro. Rate (%) (2)	Scale Reading	Weight Change	Load Side Liquid Flow Rate	Boiler Side Liquid Flow Rate (optional)	Thermopile ΔT	Boiler to Heat Exch. Temp.	Heat Exch to Boiler Temp.	Inlet Load Temp.	Outlet Load Temp.	Stack	Filter (1)	Filter (2)	Ambient		Specific Heat of Inlet Water (BTU/lb-°F)	Mass Flow Rate of Inlet Water (lb/min)	Heat Output, Btu
233	36.933	37.206		0.16	0.16	1.36	1.06	0.25	80	80	68	2.15	1.80	112	0.015	101	100	16.7	0.33	2.72	15.5	97.8	152.0	136.4	53.4	151.2	353	79	79	68		1.001	22.647	2218
234	37.095	37.365		0.16	0.16	1.36	1.06	0.25	80	80	68	2.14	1.80	112	0.015	101	98	16.2	0.44	2.19	15.5	99.4	153.3	140.3	53.4	152.8	355	79	79	68		1.001	18.278	1819
235	37.256	37.526		0.16	0.16	1.36	1.07	0.25	80	80	68	2.13	1.80	113	0.014	104	103	15.9	0.32	2.33	15.5	99.2	153.4	140.2	53.5	152.7	356	79	79	68		1.001	19.412	1927
236	37.418	37.687		0.16	0.16	1.36	1.06	0.25	80	80	69	2.13	1.80	112	0.016	98	96	15.6	0.28	2.23	15.5	99.6	153.7	140.6	53.6	153.1	357	79	79	69		1.001	18.609	1855
237	37.579	37.847		0.16	0.16	1.36	1.06	0.25	80	80	68	2.14	1.80	113	0.015	100	99	15.3	0.34	2.37	15.6	100.4	154.7	141.1	53.5	154.0	357	79	79	68		1.001	19.733	1984
238	37.740	38.007		0.16	0.16	1.36	1.06	0.25	80	80	68	2.15	1.80	112	0.014	104	102	14.9	0.44	2.30	15.5	100.6	155.1	141.2	53.6	154.2	355	79	79	68		1.001	19.198	1934
239	37.902	38.168		0.16	0.16	1.36	1.07	0.25	81	80	69	2.14	1.80	112	0.015	101	100	14.5	0.34	2.31	15.5	100.9	155.3	141.5	53.5	154.5	356	79	79	69		1.001	19.256	1946
240	38.063	38.329		0.16	0.16	1.35	1.06	0.25	81	80	68	2.16	1.80	113	0.015	100	100	14.2	0.36	2.34	15.5	100.5	154.7	141.2	53.5	154.0	355	79	79	68		1.001	19.488	1961
241	38.224	38.489		0.16	0.16	1.35	1.06	0.25	81	80	68	2.16	1.80	113	0.016	97	96	13.8	0.35	2.30	15.5	101.8	156.0	142.3	53.4	155.2	356	79	79	68		1.001	19.217	1959
242	38.385	38.649		0.16	0.16	1.35	1.07	0.25	81	80	68	2.15	1.80	112	0.013	107	106	13.4	0.44	2.38	15.6	101.4	155.8	141.9	53.5	154.9	355	79	79	68		1.001	19.812	2012
243	38.547	38.811		0.16	0.16	1.35	1.06	0.25	81	80	68	2.15	1.80	112	0.015	101	100	13.1	0.31	2.35	15.5	101.5	155.7	142.1	53.5	155.0	354	79	79	68		1.001	19.628	1994
244	38.708	38.971		0.16	0.16	1.35	1.06	0.25	81	80	69	2.16	1.80	112	0.014	103	102	12.7	0.31	2.28	15.5	101.3	155.9	141.9	53.6	154.9	353	79	79	69		1.001	19.034	1930
245	38.869	39.131		0.16	0.16	1.35	1.07	0.25	81	80	68	2.17	1.80	112	0.014	103	102	12.6	0.14	2.27	15.5	101.2	155.7	142.3	53.8	155.0	353	79	79	68		1.001	18.957	1921
246	39.030	39.293		0.16	0.16	1.35	1.07	0.25	81	81	69	2.15	1.80	113	0.013	107	107	12.1	0.51	2.33	15.5	101.6	156.3	142.5	53.8	155.4	353	79	79	69		1.001	19.465	1980
247	39.191	39.453		0.16	0.16	1.36	1.06	0.25	81	81	69	2.16	1.80	113	0.014	104	102	11.8	0.32	2.32	15.5	101.6	156.3	142.4	53.8	155.4	353	79	79	69		1.001	19.338	1967
248	39.351	39.613		0.16	0.16	1.35	1.06	0.25	81	81	69	2.18	1.80	113	0.015	99	99	11.4	0.37	2.33	15.5	102.5	157.0	143.1	53.7	156.2	354	79	79	69		1.001	19.411	1992
249	39.512	39.774		0.16	0.16	1.35	1.06	0.25	81	81	69	2.15	1.80	112	0.015	100	99	11.2	0.20	2.29	15.5	102.5	156.8	143.1	53.6	156.1	353	79	79	69		1.001	19.057	1959
250	39.674	39.934		0.16	0.16	1.35	1.06	0.25	81	81	69	2.16	1.80	112	0.015	101	99	10.8	0.42	2.31	15.5	102.5	156.6	143.1	53.5	156.0	352	79	79	69		1.001	19.255	1977
251	39.834	40.094		0.16	0.16	1.35	1.06	0.25	81	81	69	2.17	1.80	112	0.014	103	102	10.5	0.34	2.25	15.6	103.2	157.2	143.5	53.4	156.6	352	79	79	69		1.001	18.776	1940
252	39.995	40.255		0.16	0.16	1.35	1.06	0.25	81	81	69	2.18	1.80	112	0.016	97	96	10.2	0.27	2.31	15.5	103.1	157.3	143.2	53.3	156.4	352	79	79	69		1.001	19.259	1988
253	40.156	40.415		0.16	0.16	1.35	1.06	0.25	81	81	69	2.17	1.80	111	0.015	100	99	9.9	0.32	2.35	15.5	105.4	159.5	145.3	53.2	158.6	352	79	79	69		1.001	19.581	2066
254	40.316	40.576		0.16	0.16	1.35	1.06	0.25	81	81	69	2.18	1.80	111	0.015	99	99	9.4	0.50	2.35	15.5	106.9	161.0	146.4	53.1	160.0	352	79	79	69		1.001	19.586	2096
255	40.477	40.736		0.16	0.16	1.35	1.06	0.25	81	81	68	2.18	1.80	111	0.014	103	102	9.1	0.24	2.29	15.5	104.1	157.9	144.0	53.1	157.2	352	79	79	68		1.001	19.103	1992
256	40.638	40.897		0.16	0.16	1.35	1.06	0.25	81	81	68	2.18	1.80	110	0.015	100	99	8.9	0.23	2.35	15.5	104.3	157.9	144.0	53.0	157.2	351	79	78	68		1.001	19.583	2044
257	40.799	41.057		0.16	0.16	1.35	1.06	0.25	81	81	68	2.19	1.80	110	0.016	97	95	8.5	0.43	2.25	15.6	105.0	158.7	144.6	52.9	157.9	350	78	78	68		1.001	18.783	1975
258	40.960	41.217		0.16	0.16	1.35	1.06	0.25	81	81	68	2.17	1.80	110	0.014	103	102	8.2	0.31	2.33	15.4	105.1	158.7	144.7	53.0	158.0	348	78	78	68		1.001	19.416	2043
259	41.121	41.378		0.16	0.16	1.35	1.06	0.25	81	81	68	2.17	1.80	110	0.014	103	103	7.9	0.28	2.27	15.5	104.2	157.9	144.4	53.0	157.2	346	78	78	68		1.001	18.929	1975
260	41.282	41.538		0.16	0.16	1.35	1.06	0.25	81	81	68	2.17	1.80	109	0.015	100	98	7.5	0.42	2.29	15.5	104.5	158.3	144.5	53.2	157.7	344	78	78	68		1.001	19.096	1998
261	41.442	41.698		0.16	0.16	1.34	1.06	0.25	81	81	68	2.17	1.80	108	0.014	102	102	7.3	0.21	2.33	15.6	104.8	158.9	144.7	53.2	158.0	344	78	78	68		1.001	19.416	2038
262	41.603	41.860		0.16	0.16	1.35	1.06	0.25	81	81	67	2.18	1.80	108	0.015	100	100	7.0	0.30	2.56	15.5	104.1	158.4	142.5	53.2	157.2	344	77	78	67		1.001	21.524	2243
263	41.763	42.020		0.16	0.16	1.34	1.06	0.25	81	81	68	2.19	1.80	108	0.016	96	95	6.6	0.34	2.56	15.5	104.5	159.3	142.7	53.2	157.7	344	77	78	68		1.001	21.356	2234
264	41.924	42.180		0.16	0.16	1.34	1.06	0.25	81	81	67	2.18	1.80	108	0.014	103	102	6.4	0.21	2.50	15.5	104.4	158.7	142.7	53.1	157.5	345	77	78	67		1.001	20.871	2182
265	42.085	42.340		0.16	0.16	1.34	1.06	0.25	81	81	67	2.18	1.80	108	0.014	103	102	6.1	0.31	2.61	15.5	104.5	158.8	142.7	53.0	157.5	344	77	78	67		1.001	21.798	2281
266	42.245	42.501		0.16	0.16	1.34	1.06	0.25	81	81	67	2.19	1.80	108	0.016	96	96	5.9	0.22	2.63	15.5	104.2	158.3	142.4	53.0	157.1	344	77	77	67		1.001	21.966	2291
267	42.405	42.661		0.16	0.16	1.34	1.06	0.25	81	81	67	2.19	1.80	108	0.014	102	102	5.3	0.57	2.54	15.5	103.8	157.5	142.1	52.9	156.7	343	77	77	67		1.001	21.197	2203
268	42.566	42.822		0.16	0.16	1.34	1.07	0.25	81	81	67	2.19	1.80	108	0.014	103	102	5.0	0.27	2.54	15.5	104.7	158.6	142.7	52.8	157.5	344	77	77	67		1.001	21.198	2222
269	42.726	42.983		0.16	0.16	1.34	1.06	0.25	81	81	67	2.19	1.80	108	0.014	102	102	4.8	0.26	2.52	15.5	107.1	160.8	144.9	52.8	159.8	344	76	77	67		1.001	21.035	2256
270	42.887	43.143		0.16	0.16	1.34	1.06	0.25	81	81	67	2.18	1.80	108	0.015	100	98	4.5	0.28	2.58	15.5	104.7	158.3	142.7	52.7	157.4	345	76	77	67		1.001	21.521	2255
271	43.047	43.303		0.16	0.16	1.34	1.06	0.25	81	80	67	2.18	1.80	108	0.015	99	99	4.2	0.31	2.48	15.5	105.6	159.1	143.6	52.7	158.3	348	76	77	67		1.001	20.712	2190
272	43.208	43.464		0.16	0.16	1.35	1.06	0.25	81	80	67	2.19	1.80	108	0.014	103	103	3.8	0.41	2.54	15.5	104.6	158.1	142.7	52.6	157.2	351	76	77	67		1.001	21.198	2220
273	43.368	43.624		0.16	0.16	1.34	1.06	0.25	81	80	67	2.18	1.80	109	0.015	99	99	3.4	0.36	2.52	15.5	105.4	159.3	143.1	52.6	158.0	353	76	77	67		1.001	21.041	2220
274	43.529	43.784		0.16	0.16	1.34	1.06	0.25	81	80	66	2.19	1.80	109	0.014	103	102	3.3	0.14	2.60	15.5	105.4	159.2	143.1	52.6	157.9	354	76	77	66		1.001	21.657	2288
275	43.689	43.945		0.16	0.16	1.34	1.06	0.25	81	80	66	2.20	1.80	109	0.015	99	99	3.0	0.29	2.56	15.5	105.7	158.9	143.6	52.5	158.3	355	76	77	66		1.001	21.362	2261
276	43.850	44.105		0.16	0.16	1.35	1.06	0.25	81	80	66	2.19	1.80	109	0.014	103	102	2.6	0.32	2.50	15.4	105.0	159.0	142.7	52.6	157.6	355	76	77	66		1.001	20.878	2195
277	44.010	44.265		0.16	0.16	1.34	1.06	0.25	81	80	66	2.19	1.80	109	0.014	103	102	2.2	0.43	2.56	15.5	105.0	159.0	142.7	52.6	157.7	355	75	76	66		1.001	21.362	2246
278	44.170	44.426		0.16	0.16	1.35	1.06	0.25	81	80	66	2.18	1.80	109	0.014	103	103	2.0	0.20	2.58	15.5	103.7	157.7	141.8	52.8	156.5	356	75	76	66		1.001	21.524	2236
279	44.331	44.586		0.16	0.16	1.35	1.05	0.25	81	80	66	2.19	1.80	109	0.014	103	102	1.8	0.25	2.56	15.4	105.2	159.6	142.9	52.9	158.0	357	75	76	66		1.001	21.367	2250
280	44.492	44.745		0.16	0.16	1.35	1.06	0.25	81	80	66	2.18	1.90	110	0.016	97	95	1.3	0.50	2.58	15.6	104.1	157.8	142.6	52.9	157.1	362	75	76	66		1.001	21.554	2247
281	44.652	44.906		0.16	0.16	1.34	1.05	0.25	81	80	66	2.20	1.80	110	0.015	99	99	1.0	0.23	2.46	15.5	105.7	159.6	143.9	52.9	158.6	368	75	76	66		1.001	20.521	2171
282	44.813	45.065		0.16	0.16	1.34	1.05	0.25	81	80	66	2.19	1.80	110	0.014	103	102	0.6	0.47	2.63	15.5	104.9	159.0	143.1	53.0	157.9	370	75	76	66		1.001	21.969	2307
283	44.973	45.225	62.836	0.16	0.16	1.34	1.06	0.25	80	80	66	2.20	1.90	110	0.015	99	99	0.0	0.58	2.49	15.5	106.5	160.2	144.8	53.0	159.5	372	75	76	66		1.001	20.776	2215
	44.973	45.225	62.836			1.32	1.06	0.25	79	79	67			112	0.015					2.86	15.48	103.8	158.0	140.2	52.9	156.7		77.06	77.40		#DIV/0!			2479
																															TOTAL:			701543

TF_{avg}	152.491
TI_{avg}	152.822

OMNI-Test Laboratories

Manufacturer: Central Boiler
Model: Edge 360
Date: 12/09/19
Run: 1
Control #: 0117WB040E
Test Duration: 283
Output Category: IV

Technicians: _____

_____

_____

Test Results in Accordance with CSA B415.1-09

	HHV Basis	LHV Basis
Overall Efficiency	76.3%	82.2%
Combustion Efficiency	95.9%	95.9%
Heat Transfer Efficiency	80%	85.7%

Output Rate (kJ/h)	143,283	135,919	**(Btu/h)**
Burn Rate (kg/h)	9.44	20.80	**(lb/h)**
Input (kJ/h)	187,703	178,057	**(Btu/h)**

Test Load Weight (dry kg)	44.52	98.12	**dry lb**
MC wet (%)	18.03		
MC dry (%)	22.00		
Particulate (g)	27.3		
CO (g)	2,580		
Test Duration (h)	4.72		

Emissions	**Particulate**	**CO**
g/MJ Output	0.04	3.82
g/kg Dry Fuel	0.61	57.96
g/h	5.79	547.06
lb/MM Btu Output	0.09	8.87

Air/Fuel Ratio (A/F)	9.44

VERSION: 2.2 12/14/2009

VERSION: 2.2 12/14/2009

Manufacturer: Central Boiler
Model: Edge 360
Date: 12/9/2019
Run: 1
Control #: 0117WB040E
Test Duration: 283
Input Category: IV

Appliance Type: Non-Cat (Cat, Non

Temp. Units F (F or C)
Weight Units lb (kg or lb)

Fuel Data

			Oak	
Wood Moisture (% wet):	18.03	**HHV**	19,887	kj/kg
Load Weight (lb wet):	119.70	**%C**	50	
Burn Rate (dry kg/h):	9.44	**%H**	6.6	
Total Particulate Emissions:	27.3 g	**%O**	42.9	
		%ASH	0.5	

	Averages	**0.58**	**12.34**	**#DIV/0!**	**365.96**	**67.43**
					Temp. (ºF)	
Elapsed Time (min)	**Fuel Weight Remaining (lb)**	**Flue Gas Composition (%) CO**	**CO_2**	**O_2**	**Flue Gas**	**Room Temp**
0	119.7	0.0	13.3		359	69
1	119.6	0.2	5.0		324	69
2	118.5	0.1	8.9		352	69
3	117.9	0.0	17.4		368	69
4	117.4	0.0	16.8		373	69
5	117.0	0.0	16.5		375	69
6	116.5	0.0	14.6		373	69
7	116.1	0.0	16.0		370	69
8	115.6	0.0	14.5		371	69
9	115.1	0.0	16.5		370	70
10	114.6	0.0	14.4		369	70
11	114.0	0.0	16.2		371	70
12	113.8	0.0	14.7		366	70
13	113.2	0.0	14.9		371	70
14	112.7	0.0	15.7		374	70
15	112.3	0.0	15.7		375	70
16	111.7	0.0	15.6		376	69
17	111.2	0.0	15.6		376	69
18	110.6	0.0	15.6		376	69
19	110.1	0.0	15.5		377	69
20	109.7	0.0	15.3		377	69
21	109.3	0.0	15.3		377	69

22	108.8	0.0	15.2		377	68
23	108.3	0.0	15.1		377	68
24	107.8	0.0	15.0		377	68
25	107.5	0.0	15.0		377	68
26	107.1	0.0	15.0		377	68
27	106.5	0.0	14.9		377	68
28	106.1	0.0	14.9		377	68
29	105.5	0.0	14.8		376	68
30	105.2	0.0	14.7		376	68
31	104.9	0.0	14.7		375	68
32	104.3	0.0	14.7		375	68
33	103.9	0.0	14.6		376	67
34	103.3	0.0	14.7		376	67
35	103.1	0.0	14.8		376	67
36	102.6	0.0	14.8		375	67
37	102.0	0.0	14.8		375	67
38	101.7	0.0	14.7		377	67
39	101.4	0.0	14.7		378	67
40	100.8	0.0	14.6		378	67
41	100.6	0.0	14.7		376	67
42	99.9	0.0	14.5		375	67
43	99.5	0.0	14.4		377	67
44	99.2	0.0	14.4		377	67
45	98.7	0.0	14.4		377	67
46	98.3	0.0	14.3		379	67
47	97.9	0.0	14.6		378	67
48	97.4	0.0	14.3		378	67
49	97.0	0.1	14.2		378	67
50	96.6	0.1	13.8		377	66
51	96.3	0.1	13.6		377	66
52	95.9	0.1	13.5		376	66
53	95.5	0.1	13.5		375	66
54	95.0	0.1	13.4		375	66
55	94.5	0.2	13.2		374	66
56	94.2	0.2	13.2		374	66
57	93.7	0.2	13.2		373	66
58	93.3	0.2	13.0		373	66
59	92.8	0.3	12.8		373	66
60	92.4	0.3	12.7		371	66
61	92.0	0.3	12.5		370	66
62	91.4	0.3	12.5		369	66
63	91.3	0.3	12.3		368	66

64	90.8	0.3	12.4		367	66
65	90.4	0.3	12.6		367	66
66	89.8	0.5	12.3		367	66
67	89.6	0.7	12.2		367	66
68	89.1	0.4	12.7		370	66
69	88.6	0.4	12.7		371	66
70	88.3	0.4	12.7		371	66
71	87.9	0.5	12.5		371	66
72	87.2	0.4	12.5		372	66
73	87.0	0.4	12.5		373	66
74	86.4	0.5	12.4		373	66
75	86.1	0.5	12.0		371	66
76	85.6	0.6	11.8		369	66
77	85.2	0.5	11.9		367	66
78	85.0	0.5	11.7		365	66
79	84.3	0.6	11.6		364	66
80	83.9	0.6	11.7		363	66
81	83.7	0.6	12.3		364	66
82	83.1	0.6	12.1		363	67
83	82.7	0.8	11.8		362	67
84	82.3	1.1	11.5		361	67
85	81.9	0.9	11.5		360	67
86	81.6	0.8	11.4		360	67
87	81.1	0.8	11.6		360	67
88	80.6	1.0	11.4		359	67
89	80.2	0.9	11.5		359	67
90	79.9	0.8	11.5		359	67
91	79.5	0.8	11.6		360	67
92	79.0	0.4	12.3		362	67
93	78.6	0.4	12.1		364	67
94	78.2	0.4	12.1		364	67
95	77.7	0.5	12.1		364	67
96	77.4	0.4	12.2		364	67
97	77.0	0.4	12.1		365	67
98	76.5	0.4	12.2		365	67
99	76.0	0.4	12.4		366	67
100	75.6	0.3	12.4		367	67
101	75.5	0.3	12.2		368	68
102	74.9	0.4	12.1		367	68
103	74.2	0.5	12.0		367	68
104	74.0	0.5	11.9		366	68
105	73.5	0.7	11.6		365	67

106	73.2	0.8	11.4		363	68
107	72.9	0.8	11.2		361	68
108	72.4	0.7	11.4		359	68
109	72.1	0.7	11.5		359	68
110	71.6	0.7	11.4		358	68
111	71.2	0.8	11.2		358	68
112	70.9	0.8	11.5		358	68
113	70.4	0.7	11.5		358	68
114	70.1	0.7	11.4		357	68
115	69.5	0.8	11.3		356	68
116	69.1	1.0	11.0		356	68
117	68.9	0.9	11.3		355	68
118	68.3	0.9	11.2		355	68
119	68.0	1.0	11.1		354	68
120	67.5	1.0	11.2		353	68
121	67.0	0.6	11.9		356	68
122	66.6	0.5	12.2		358	68
123	66.1	0.5	12.2		358	68
124	65.8	0.6	12.1		358	68
125	65.3	0.1	15.8		363	68
126	64.8	0.0	16.2		376	69
127	64.2	0.0	15.8		380	69
128	63.8	0.0	15.4		381	68
129	63.1	0.0	15.1		382	69
130	62.6	0.0	15.0		382	68
131	62.1	0.0	14.9		383	68
132	61.6	0.0	14.8		384	68
133	61.3	0.0	14.8		384	69
134	60.6	0.0	14.8		384	69
135	60.1	0.0	14.8		384	69
136	59.5	0.0	14.7		384	69
137	59.0	0.0	14.6		384	69
138	58.5	0.0	14.7		383	69
139	58.1	0.0	16.4		385	68
140	57.4	0.0	15.6		387	68
141	56.9	0.0	14.8		382	68
142	56.4	0.0	15.5		385	68
143	56.0	0.0	15.7		387	68
144	55.6	0.0	15.5		388	68
145	54.9	0.0	15.5		389	68
146	54.5	0.0	15.4		390	68
147	54.1	0.0	15.2		392	68

148	53.4	0.0	15.4		393	68
149	52.9	0.0	15.3		393	67
150	52.5	0.0	15.1		393	67
151	51.9	0.0	14.8		392	67
152	51.5	0.0	14.7		391	67
153	51.2	0.0	14.6		391	67
154	50.7	0.0	14.5		391	67
155	50.3	0.0	14.7		393	67
156	49.7	0.0	14.0		387	67
157	49.1	0.0	14.6		391	67
158	48.6	0.0	14.6		392	67
159	48.3	0.0	14.5		393	67
160	47.9	0.0	14.4		393	67
161	47.4	0.1	14.1		392	66
162	46.8	0.1	14.0		392	66
163	46.5	0.2	13.7		392	66
164	45.9	0.4	13.2		390	66
165	45.5	0.6	12.9		388	66
166	45.2	0.6	12.7		387	66
167	44.7	0.5	12.8		385	66
168	44.3	0.6	12.4		384	66
169	43.8	0.8	12.0		383	66
170	43.3	1.3	11.3		380	66
171	42.9	1.2	11.3		377	66
172	42.4	1.6	11.0		376	66
173	42.0	1.4	11.1		375	66
174	41.6	1.5	10.9		374	66
175	41.2	1.6	10.6		372	66
176	40.7	1.4	10.5		369	66
177	40.2	1.4	10.4		367	66
178	40.0	1.4	10.2		365	66
179	39.5	1.4	10.3		363	66
180	39.0	1.4	10.5		364	66
181	38.4	1.3	10.4		362	66
182	38.1	1.4	10.5		361	66
183	37.6	1.3	10.5		361	66
184	37.4	1.4	10.2		360	67
185	36.8	1.4	10.0		358	67
186	36.3	1.3	9.9		357	67
187	36.0	1.4	9.9		355	67
188	35.6	1.4	9.8		353	67
189	35.1	1.3	9.7		352	67

190	34.7	1.2	9.6		350	67
191	34.4	1.2	9.5		348	67
192	33.8	1.2	9.4		346	67
193	33.4	1.2	9.4		343	67
194	33.0	1.7	10.4		346	67
195	32.5	1.4	11.0		351	67
196	32.2	1.5	11.0		354	67
197	31.6	1.4	11.1		357	67
198	31.2	1.2	11.5		360	67
199	30.4	1.2	11.5		363	67
200	30.2	1.2	11.4		364	67
201	29.7	1.1	11.5		364	67
202	29.2	0.8	12.1		367	67
203	28.8	0.9	11.7		368	67
204	28.2	1.0	11.4		367	68
205	28.0	1.0	11.2		365	67
206	27.3	1.0	11.1		362	68
207	27.1	1.1	11.0		361	67
208	26.6	1.2	10.7		359	67
209	26.1	1.2	10.8		358	68
210	25.7	1.3	10.5		356	68
211	25.2	1.3	10.4		354	68
212	24.9	1.2	10.4		353	68
213	24.6	1.1	10.9		353	68
214	24.2	1.0	10.7		354	68
215	23.8	1.1	10.4		353	68
216	23.3	1.1	10.4		351	68
217	22.8	1.2	10.3		350	68
218	22.3	1.3	10.2		349	68
219	22.3	1.3	10.2		348	68
220	21.8	1.4	10.2		348	68
221	21.3	1.2	10.5		348	68
222	21.0	1.3	10.4		349	68
223	20.4	1.2	10.3		349	68
224	20.1	1.4	10.2		348	68
225	19.7	1.3	10.3		348	68
226	19.4	1.3	10.3		348	68
227	19.1	1.2	10.6		349	68
228	18.6	1.0	10.7		350	68
229	18.2	0.9	10.9		351	68
230	17.8	0.9	10.9		351	68
231	17.4	1.0	10.8		350	68

232	17.0	0.9	10.9		352	68
233	16.7	0.7	11.0		353	68
234	16.2	0.6	11.1		355	68
235	15.9	0.7	11.0		356	68
236	15.6	0.7	10.9		357	69
237	15.3	0.6	10.8		357	68
238	14.9	0.8	10.8		355	68
239	14.5	0.8	10.8		356	69
240	14.2	0.9	10.7		355	68
241	13.8	0.6	10.7		356	68
242	13.4	0.6	10.7		355	68
243	13.1	0.7	10.4		354	68
244	12.7	0.7	10.2		353	69
245	12.6	0.6	10.6		353	68
246	12.1	0.6	10.7		353	69
247	11.8	0.6	10.7		353	69
248	11.4	0.7	10.5		354	69
249	11.2	0.7	10.5		353	69
250	10.8	0.7	10.3		352	69
251	10.5	0.8	10.3		352	69
252	10.2	0.8	10.2		352	69
253	9.9	0.7	10.3		352	69
254	9.4	0.7	10.3		352	69
255	9.1	0.7	10.2		352	68
256	8.9	0.9	10.2		351	68
257	8.5	0.9	9.9		350	68
258	8.2	1.0	9.5		348	68
259	7.9	1.1	9.4		346	68
260	7.5	1.1	9.2		344	68
261	7.3	1.6	10.0		344	68
262	7.0	1.3	10.1		344	67
263	6.6	1.4	10.0		344	68
264	6.4	1.4	10.0		345	67
265	6.1	1.3	9.8		344	67
266	5.9	1.3	9.7		344	67
267	5.3	1.2	9.6		343	67
268	5.0	1.2	9.7		344	67
269	4.8	1.2	9.7		344	67
270	4.5	1.2	10.2		345	67
271	4.2	1.0	10.5		348	67
272	3.8	0.8	10.6		351	67
273	3.4	0.8	10.5		353	67

274	3.3	0.8	10.6		354	66
275	3.0	0.8	10.6		355	66
276	2.6	0.7	10.6		355	66
277	2.2	0.7	10.6		355	66
278	2.0	0.7	10.7		356	66
279	1.8	0.7	10.5		357	66
280	1.3	0.1	12.7		362	66
281	1.0	0.1	12.7		368	66
282	0.6	0.1	12.5		370	66
283	0.0	0.2	12.5		372	66

OMNI-Test Laboratories, Inc.

ASTM E2618 Wood Heater Run Sheets

Client: Central Boiler Project Number: 0117WB040E Run Number: 1
Model: Edge 360 Tracking Number: 2399 Date: 12/9/19
Test Crew: B Davis
OMNI Equipment ID numbers: 594, 410 675, 335, 336, 356

Wood Heater Supplemental Data

Start Time: 16:44 Booth #: E3

Stop Time: 21:27

Stack Gas Leak Check:

Initial: good Final: good

Sample Train Leak Check:

A: 0.0 @ 8 "Hg
B: 0.0 @ 8 "Hg

Calibrations: Span Gas CO_2: 17.06 CO: 4.29

	Pre Test		Post Test	
	Zero	Span	Zero	Span
Time	1631	1631	2131	2131
CO_2	0.00	17.01	0.00	17.01
CO	0.00	4.28	0.00	4.26

Air Velocity (ft/min): Initial: <50 Final: <50
Scale Audit (lbs): Initial: 10.0 Final: 10.0
Pitot Tube Leak Test: Initial: good Final: good
Stack Diameter (in): 6"
Induced Draft: 0.0
% Smoke Capture: 100%
Flue Pipe Cleaned Prior to First Test in Series:
Date: 12/6/19 Initials: BR

	Initial	Middle	Ending
P_b (in/Hg)	30.24		30.19
RH (%)	25.0		27.9
Ambient (°F)	69		66

Tunnel Traverse

Microtector Reading	dP (in H_2O)	T(°F)
1	.009	111
2	.012	111
3	.014	111
4	.015	112
5	.014	112
6	.015	112
1	.014	113
2	.015	113
3	.015	113
4	.016	113
5	.015	113
6	Center .018	114
	.014	112

Background Filter Volume: 62.836

Tunnel Static Pressure (in H_2O):	
Beginning of Test	End of Test
-.187	-.187

Technician Signature: [signature] Date: 1/9/20

OMNI-Test Laboratories, Inc.

ASTM E2618 Wood Heater Run Sheets

Client: Central Boiler Project Number: 0117WB040E Run Number: 1
Model: Edge 360 Tracking Number: 2399 Date: 12/9/19
Test Crew: B Davis
OMNI Equipment ID numbers:

Wood Heater Run Notes

Air Control Settings

Primary:

Target Btu ≈ 150,000

Secondary: fixed

Tertiary/Pilot: n/A

Fan: Automatic

Preburn Notes

Time	Notes
Ø	Burned Approx. 130 lbs of fuel, the Tared 22.0 lbs and loaded fuel

Test Notes

Sketch test fuel configuration:

See photo

Start up procedures & Timeline:

Bypass: N/A
Fuel loaded by: 75 second
Door closed at: 75 seconds
Primary air: BTU draw set to ≈ 150,000

Notes:

Time	Notes
60	Changed front filter in tray A

Technician Signature: B D Date: 1/4/20

Run 2
Test was omitted from weighted calculations by conducting two additional category II tests and only using 2/3 of the results.
See tests 3 and 5

Hydronic Heating Appliances - Test Method ASTM 2618
Results

Manufacturer: Central Boiler
Model: Edge 360
Tracking No.: 2399
Project No.: 0117WB040E
Run: 2
Test Date: December 10, 2019

Burn Rate	**2.10 kg/hr dry**
Average Tunnel Temperature	78 degrees F
Average Gas Velocity in Dilution Tunnel - vs	7.4 feet/second
Average Gas Flow Rate in Dilution Tunnel - Qsd	20355 dscf/hour
Average Delta p	0.014 inches H20
Average Delta H	1.33 inches H20
Total Time of Test	1301 minutes

PARTICULATE EMISSIONS RESULTS

First Hour:	**0.42** g/hr
	0.13 g/kg
	0.03 lb/mmBTU output
Complete Run:	**3.10** g/hr
	1.48 g/kg
	0.22 lb/mmBTU output

	SAMPLE TRAIN 1	SAMPLE TRAIN 2	AMBIENT SAMPLE TRAIN
Total Sample Volume - Vm	208.40 cubic feet	210.25 cubic feet	296.38 cubic feet
Average Gas Meter Temperature	79 degrees F	78 degrees F	67 degrees F
Total Sample Volume (Standard Conditions) - Vmstd	208.2 dscf	206.2 dscf	295.8 dscf
Total Particulates - mn	31.7 mg	31.5 mg	0 mg
Particulate Concentration (dry-standard)	0.00015 grams/dscf	0.00015 grams/dscf	0.000000 grams/dscf
Particulate Emissions	67.22 grams	67.43 grams	
Difference from Average	0.11 grams	0.11 grams	

Results Are Acceptable

	AVERAGE
Total Sample Volume - Vm	209.33 cubic feet
Average Gas Meter Temperature	79 degrees F
Total Sample Volume (Standard Conditions) - Vmstd	207.2 dscf
Particulate Concentration (dry-standard)	0.00015 grams/dscf
Particulate Emissions	67.32 grams
7.5% of the average particulate emissions	5.05 grams

ADDITIONAL ACCEPTANCE CRITERIA

Boiler Water Return Temperature >120 °F	**Acceptable**
Proportional Rate Variation >80%	**Acceptable**
90% of PR Values between 90-110%	**Acceptable**

	SAMPLE TRAIN 1 - FIRST HOUR
Total Sample Volume - Vm	9.59 cubic feet
Average Gas Meter Temperature	74 degrees F
Total Sample Volume (Standard Conditions) - Vmstd	9.69 dscf
Total Particulates - mn	0.2 mg
Particulate Concentration (dry-standard)	0.00002 grams/dscf
Particulate Emissions	0.42 grams
Burn Rate	3.17 (dry kg/hr)
Heat Output Rate	31508 BTU/hr

Hydronic Heating Appliances
Results

Manufacturer:	Central Boiler	Equipment Numbers:	
Model:	Edge 360		
Tracking No.:	2399		
Project No.:	0117WB040E		
Run #:	2		
Date:	12/10/19		

TRAIN 1 (First Hour emissions)

Sample Component	Reagent	Filter, Probe or Dish #	Weights		
			Final, mg	Tare, mg	Particulate, mg
B. Front filter catch	Filter	D936	118.3	118.1	0.2
C. Rear filter catch	Filter				0.0
D. Probe catch*	Probe				0.0
E. Filter seals catch*	Seals				0.0

Sub-Total	Total Particulate, mg:	0.2

TRAIN 1 (Post First Hour Change-out)

Sample Component	Reagent	Filter, Probe or Dish #	Weights		
			Final, mg	Tare, mg	Particulate, mg
B. Front filter catch	Filter	D937	143.6	118.1	25.5
C. Rear filter catch	Filter	D938	117.9	117.8	0.1
D. Probe catch*	Probe	11	114190.2	114186.3	3.9
E. Filter seals catch*	Seals	R903	4121.4	4119.4	2.0

Sub-Total	Total Particulate, mg:	31.5
Train 1 Aggregate	Total Particulate, mg:	31.7

TRAIN 2

Sample Component	Reagent	Filter, Probe or Dish #	Weights		
			Final, mg	Tare, mg	Particulate, mg
A. Front filter catch	Filter	D939	144.4	118.7	25.7
B. Rear filter catch	Filter	D940	116.8	117.5	-0.7
C. Probe catch*	Probe	12	114287.9	114283.7	4.2
D. Filter seals catch*	Seals	R904	3423.3	3421.0	2.3

Total Particulate, mg:	31.5

AMBIENT

Sample Component	Reagent	Filter # or Probe #	Weights		
			Final, mg	Tare, mg	Particulate, mg
A. Front filter catch*	Filter	D941	118.7	118.8	0.0

Total Particulate, mg:	0.0

*Particulate catch that results in a negative number, is assumed to be zero for probes and seals, negative numbers for filters are assumed to be part of the seal weight.

Component	Equations:
A. Front filter catch	Final (mg) - Tare (mg) = Particulate, mg
B. Rear filter catch	Final (mg) - Tare (mg) = Particulate, mg
C. Probe catch	Final (mg) - Tare (mg) = Particulate, mg

Hydronic Heating Appliances
Fuel Moisture

Manufacturer:	Central Boiler
Model:	Edge 360
Tracking No.:	2399
Project No.:	0117WB040E
Technician:	B. Davis
Run #:	2
Test Date:	December 10, 2019

Wet Weight (lb)	% Moisture				
10.2	20.5	21.4	20.3	19.3	19.3
10.1	20.9	19.4	20.2	21.1	22.5
9.6	20.6	20.4	19.1	19.4	19.2
9.7	18.9	20.4	19.1	19.8	20.4
8.5	20.2	19.4	19.9	19.7	19.8
9.5	22.6	21.6	19.8	22.4	22.5
9.7	21	22.1	18.3	19.8	19.7
9	19.2	19.2	19.5	21.5	22.6
9.3	21.3	19.1	22.7	19.5	20.1
8.5	23.3	20.1	22.5	20.5	22.3
9.2	25.7	25.6	24.5	20.4	19.2
8.9	23.8	22.5	23.1	22.4	23.7
9.2	25.7	25.6	24.5	20.4	19.2

Total Weight of Load (lb): 121.4

Total Moisture of Load (%): 21.1

Equipment Numbers:

Hydronic Heating Appliances
Test Data

Run: 2

Manufacturer: Central Boiler
Model: Edge 360
Tracking No.: 2399
Project No.: 0117WB040E
Test Date: December 10, 2019
Technician: B. Davis
Beginning Clock Time: 14:39
Recording Interval: 1 min.
Total Sampling Time: 1301 min.

Velocity Traverse Data

	Pt.1	Pt.2	Pt.3	Pt.4	Pt.5	Pt.6	Pt.7	Pt.8	Pt.9	Pt.10	Pt.11	Pt.12	Center	
Initial dP	0.010	0.014	0.015	0.014	0.014	0.010	0.012	0.014	0.016	0.014	0.014	0.011	0.015	"H2O
Initial Temp.	71	71	71	71	71	71	71	71	71	71	71	71	71	oF

Air Velocity: Initial: <50 Final: <50 V_{straw} 7.57 ft/sec
Scale Audit: Pre: 10.0 Post: 10.0 Induced Draft: 0 V_{scent} 8.10 ft/sec
Pitot Tube Leak Test: Pre: 0 Post: 0 % Smoke Capture: 100 F_p 0.934
Flue Pipe Cleaned Prior to First Test in Series: Date:

PM Control Module: 335, 336
Dilution Tunnel MW(dry): 29.00 lb/lb-mole
Dilution Tunnel MW(wet): 28.78 lb/lb-mole
Dilution Tunnel H2O: 2.00 percent
Dilution Tunnel Static: -0.181 "H2O
Pitot Tube Cp: 0.99

	(1)	(2)	(amb)
Meter Box Y Factor:	1.009	0.99	0.988

Barometric Pressure:	Begin	Middle	End	Average	
	30.22	30.15	30.08	30.15	"Hg

Tunnel Velocity: 7.44 ft/sec.
Intial Tunnel Flow: 350.4 scfm
Average Tunnel Flow: 339.3 scfm
Tunnel Area: 0.785 ft2
Post-Test Leak Check (1): 0.000 cfm @ 10 in. Hg
Post-Test Leak Check (2): 0.000 cfm @ 8 in. Hg
Fuel Moisture (dry basis %): 21.1
Total Particulate (1): 31.7
Total Particulate (2): 31.5

Elapsed Time	Particulate Sampling Data: Gas Meter Cubic Feet (1)	Gas Meter Cubic Feet (2)	Gas Meter Cubic Feet (amb)	Sample Rate, cfm (1)	Sample Rate, cfm (2)	Orifice dH (1)	Orifice dH (2)	Orifice dH (amb)	Meter oF (1)	Meter oF (2)	Meter oF (amb)	Meter Vac. In. Hg. (1)	Meter Vac. In. Hg. (2)	Dilution Tunnel Temp.	Dilution Tunnel dP	Pro. Rate (%) (1)	Pro. Rate (%) (2)	Fuel Weight, lb: Scale Reading	Weight Change	Flow, gpm: Load Side Liquid Flow Rate	Boiler Side Liquid Flow Rate (optional)	Temperature Data, oF: Thermopile ΔT	Boiler to Heat Exch. Temp.	Heat Exch to Boiler Temp.	Inlet Load Temp.	Outlet Load Temp.	Stack	Filter (1)	Filter (2)	Ambient		Specific Heat of Inlet Water (BTU/lb-°F)	Mass Flow Rate of Inlet Water (lb/min)	Heat Output, Btu
0	0.000	0.000	0			1.10	0.89		71	70	67	1.9	1.3	95	0.014			121.4		0.58	15.52	109.93	168.64	165.29	58.08	168.01	301	69	69	67				
1	0.159	0.153		0.16	0.15	1.37	1.08	0.25	71	70	67	1.94	1.4	89	0.017	93	89	120.9	0.50	0.58	15.49	110.77	169.27	165.98	58.06	168.83	275	69	70	67		1.001	4.873	540
2	0.320	0.314		0.16	0.16	1.36	1.07	0.25	71	70	67	1.93	1.4	90	0.017	94	94	120.5	0.40	0.60	15.50	110.82	169.31	165.96	58.04	168.86	288	70	70	67		1.001	5.029	558
3	0.480	0.473		0.16	0.16	1.36	1.06	0.25	71	71	67	1.94	1.4	96	0.016	97	96	120.1	0.38	0.66	15.50	111.07	169.56	166.33	57.94	169.01	314	71	71	67		1.001	5.470	608
4	0.640	0.632		0.16	0.16	1.36	1.07	0.25	71	71	67	1.93	1.4	99	0.015	101	99	119.4	0.73	0.62	15.53	112.34	170.82	167.42	57.74	170.08	330	71	71	67		1.001	5.199	585
5	0.800	0.792		0.16	0.16	1.37	1.07	0.25	71	71	67	1.94	1.4	101	0.014	104	103	118.9	0.51	0.64	15.56	113.76	171.89	168.47	57.55	171.31	340	72	72	67		1.001	5.363	611
6	0.960	0.951		0.16	0.16	1.36	1.06	0.25	71	71	67	1.95	1.4	101	0.013	108	107	118.4	0.50	0.58	15.54	114.83	172.95	169.36	57.39	172.22	346	72	72	67		1.001	4.874	560
7	1.119	1.110		0.16	0.16	1.36	1.06	0.25	71	71	67	1.95	1.4	102	0.014	104	103	118.0	0.40	0.64	15.49	115.69	173.61	170.05	57.28	172.97	351	72	72	67		1.001	5.360	621
8	1.279	1.270		0.16	0.16	1.36	1.07	0.25	71	71	67	1.94	1.4	103	0.014	105	104	117.5	0.48	0.60	15.31	116.60	174.48	170.84	57.18	173.78	357	73	72	67		1.001	5.033	588
9	1.439	1.428		0.16	0.16	1.34	1.06	0.25	71	71	67	1.93	1.4	104	0.013	109	106	116.8	0.69	0.59	15.49	117.65	175.52	171.89	57.12	174.77	362	73	73	67		1.001	4.879	575
10	1.598	1.587		0.16	0.16	1.35	1.06	0.25	71	71	67	1.95	1.4	105	0.013	108	107	116.2	0.58	0.62	15.49	118.79	176.63	173.06	57.06	175.85	367	73	73	67		1.001	5.205	619
11	1.757	1.746		0.16	0.16	1.34	1.06	0.25	72	71	67	1.93	1.4	106	0.015	101	100	115.9	0.34	0.62	15.44	119.75	177.41	173.68	57.01	176.76	370	73	73	67		1.001	5.196	623
12	1.916	1.904		0.16	0.16	1.35	1.05	0.25	72	71	67	1.93	1.4	107	0.015	101	99	115.4	0.47	0.60	15.45	120.61	178.26	174.56	56.96	177.57	376	74	73	67		1.001	5.036	608
13	2.075	2.064		0.16	0.16	1.34	1.06	0.25	72	71	67	1.94	1.4	108	0.015	101	101	114.8	0.60	0.64	15.52	121.74	179.31	175.54	56.92	178.65	380	74	73	67		1.001	5.358	653
14	2.234	2.222		0.16	0.16	1.35	1.05	0.25	72	71	66	1.94	1.4	110	0.014	104	103	114.3	0.50	0.60	15.47	122.79	180.33	176.59	56.87	179.66	384	74	74	66		1.001	5.037	619
15	2.393	2.381		0.16	0.16	1.34	1.05	0.25	72	72	66	1.93	1.4	112	0.015	101	100	113.9	0.39	0.59	15.46	123.80	181.31	177.48	56.81	180.61	389	74	74	66		1.001	4.883	605
16	2.551	2.539		0.16	0.16	1.35	1.05	0.25	72	72	66	1.92	1.4	112	0.015	100	99	113.5	0.41	0.62	15.51	124.80	182.34	178.52	56.76	181.56	390	74	74	66		1.001	5.199	650
17	2.711	2.697		0.16	0.16	1.34	1.05	0.25	72	72	66	1.93	1.4	111	0.016	98	96	112.9	0.56	0.62	15.45	125.92	183.33	179.43	56.70	182.62	374	74	74	66		1.001	5.199	655
18	2.870	2.856		0.16	0.16	1.34	1.05	0.25	72	72	66	1.93	1.4	89	0.014	102	101	113.0	-0.04	0.61	15.36	126.81	184.06	180.24	56.66	183.47	333	73	73	66		1.001	5.045	641
19	3.030	3.015		0.16	0.16	1.34	1.05	0.25	72	72	66	1.92	1.4	83	0.015	99	97	112.9	0.04	0.60	15.47	127.10	184.14	180.37	56.59	183.69	309	72	72	66		1.001	5.013	638
20	3.189	3.173		0.16	0.16	1.34	1.05	0.25	73	72	66	1.91	1.4	79	0.015	98	97	112.9	0.04	0.64	15.54	127.39	184.33	180.51	56.49	183.88	295	72	72	66		1.001	5.366	684
21	3.348	3.333		0.16	0.16	1.34	1.05	0.25	73	72	66	1.9	1.4	77	0.015	98	98	112.9	-0.04	0.58	15.47	127.47	184.37	180.57	56.41	183.88	283	71	72	66		1.001	4.836	617
22	3.507	3.492		0.16	0.16	1.34	1.05	0.25	73	72	66	1.91	1.3	76	0.014	101	100	113.0	-0.02	0.62	15.47	127.64	184.30	180.61	56.34	183.98	272	71	71	66		1.001	5.205	665
23	3.666	3.651		0.16	0.16	1.34	1.06	0.25	73	73	66	1.89	1.3	75	0.015	98	97	112.9	0.11	0.61	15.49	127.61	184.26	180.49	56.26	183.87	262	71	71	66		1.001	5.044	644
24	3.825	3.811		0.16	0.16	1.34	1.05	0.25	73	73	66	1.89	1.4	75	0.015	98	97	112.8	0.02	0.61	15.48	127.62	184.23	180.43	56.21	183.83	255	70	71	66		1.001	5.045	645
25	3.985	3.970		0.16	0.16	1.34	1.05	0.25	73	73	66	1.91	1.4	75	0.015	98	97	112.9	-0.08	0.61	15.53	127.48	184.07	180.23	56.19	183.66	247	70	71	66		1.001	5.044	644
26	4.145	4.129		0.16	0.16	1.34	1.06	0.25	73	73	66	1.91	1.3	74	0.016	95	93	112.8	0.11	0.61	15.46	127.44	184.07	180.28	56.23	183.68	240	70	71	66		1.001	5.046	644
27	4.304	4.289		0.16	0.16	1.34	1.05	0.25	74	73	66	1.9	1.3	74	0.015	97	97	112.9	-0.10	0.59	15.52	127.14	183.93	180.18	56.39	183.53	234	70	70	66		1.001	4.877	621
28	4.464	4.448		0.16	0.16	1.35	1.05	0.25	74	73	66	1.9	1.4	73	0.015	98	96	112.9	0.03	0.64	15.47	126.83	183.84	180.10	56.60	183.43	229	70	70	66		1.001	5.369	682
29	4.624	4.608		0.16	0.16	1.34	1.06	0.25	74	73	66	1.91	1.4	73	0.014	101	100	113.0	-0.09	0.61	15.47	126.61	183.84	180.11	56.81	183.42	225	70	70	66		1.001	5.043	639
30	4.784	4.768		0.16	0.16	1.34	1.05	0.25	74	73	66	1.9	1.3	72	0.015	98	97	113.0	-0.03	0.62	15.63	126.20	183.59	179.89	57.02	183.22	223	69	70	66		1.001	5.204	657
31	4.944	4.927		0.16	0.16	1.34	1.05	0.25	74	74	66	1.9	1.3	72	0.014	101	99	112.9	0.05	0.59	15.49	125.83	183.35	179.68	57.23	183.06	218	69	70	66		1.001	4.883	615
32	5.103	5.087		0.16	0.16	1.33	1.06	0.25	74	74	66	1.89	1.3	71	0.016	94	94	112.9	0.00	0.61	15.50	125.40	183.23	179.54	57.43	182.83	214	69	70	66		1.001	5.043	633
33	5.263	5.247		0.16	0.16	1.33	1.05	0.25	74	74	66	1.91	1.3	71	0.014	101	100	112.8	0.09	0.62	15.54	125.07	183.17	179.47	57.60	182.67	210	69	69	66		1.001	5.200	651
34	5.422	5.406		0.16	0.16	1.34	1.05	0.25	74	74	66	1.91	1.4	71	0.014	100	99	113.0	-0.14	0.61	15.47	124.80	182.98	179.30	57.76	182.56	206	69	69	66		1.001	5.073	634
35	5.582	5.566		0.16	0.16	1.34	1.05	0.25	74	74	66	1.91	1.3	71	0.015	98	97	113.0	-0.06	0.61	15.53	124.53	182.75	179.10	57.90	182.44	202	69	69	66		1.001	5.042	629
36	5.742	5.725		0.16	0.16	1.34	1.05	0.25	75	74	66	1.89	1.4	71	0.015	97	96	112.9	0.12	0.62	15.46	124.19	182.50	178.86	58.01	182.20	198	69	69	66		1.001	5.162	642
37	5.902	5.884		0.16	0.16	1.34	1.06	0.25	75	74	67	1.91	1.4	72	0.015	98	96	113.0	-0.07	0.62	15.50	123.89	182.27	178.65	58.10	181.99	194	69	69	67		1.001	5.199	645
38	6.062	6.045		0.16	0.16	1.34	1.05	0.25	75	74	67	1.89	1.3	73	0.015	98	97	112.9	0.07	0.62	15.40	123.43	182.00	178.41	58.18	181.61	191	69	69	67		1.001	5.199	642
39	6.221	6.204		0.16	0.16	1.34	1.05	0.25	75	75	67	1.9	1.4	72	0.014	100	99	113.1	-0.18	0.62	15.45	123.22	181.80	178.18	58.18	181.40	187	69	69	67		1.001	5.201	642
40	6.381	6.363		0.16	0.16	1.34	1.05	0.25	75	75	67	1.91	1.4	71	0.015	97	96	112.7	0.40	0.60	15.52	123.05	181.51	177.85	58.06	181.11	183	69	69	67		1.001	5.035	620
41	6.542	6.524		0.16	0.16	1.35	1.05	0.25	75	75	67	1.9	1.3	71	0.015	98	97	112.8	-0.12	0.59	15.44	122.98	181.35	177.77	57.89	180.87	180	69	69	67		1.001	4.879	601
42	6.702	6.683		0.16	0.16	1.34	1.05	0.25	75	75	67	1.9	1.4	71	0.015	97	96	113.0	-0.15	0.61	15.47	122.89	180.92	177.29	57.76	180.65	176	69	69	67		1.001	5.044	621
43	6.862	6.843		0.16	0.16	1.34	1.06	0.25	75	75	66	1.9	1.4	71	0.015	97	96	112.8	0.21	0.62	15.47	122.60	180.42	176.82	57.64	180.24	173	68	69	66		1.001	5.203	639
44	7.022	7.003		0.16	0.16	1.34	1.05	0.25	75	75	66	1.9	1.4	71	0.016	94	93	113.0	-0.23	0.62	15.45	122.21	180.18	176.58	57.56	179.77	171	68	69	66		1.001	5.203	637
45	7.182	7.163		0.16	0.16	1.34	1.05	0.25	75	75	66	1.89	1.4	70	0.016	94	93	112.9	0.05	0.62	15.57	121.98	179.85	176.29	57.55	179.52	168	68	69	66		1.001	5.203	635
46	7.342	7.322		0.16	0.16	1.34	1.06	0.25	76	75	66	1.89	1.4	70	0.015	97	96	112.8	0.13	0.62	15.47	121.74	179.64	176.11	57.57	179.30	165	68	68	66		1.001	5.203	634
47	7.503	7.483		0.16	0.16	1.33	1.06	0.25	76	75	66	1.89	1.4	70	0.015	98	97	113.2	-0.33	0.61	15.42	121.47	179.42	175.84	57.58	179.04	163	68	68	66		1.001	5.047	614
48	7.663	7.643		0.16	0.16	1.34	1.05	0.25	76	75	66	1.91	1.4	70	0.014	101	100	112.8	0.32	0.60	15.57	121.19	179.12	175.53	57.62	178.81	160	68	68	66		1.001	5.040	612

Elapsed Time	Particulate Sampling Data																	Fuel Weight, lb		Flow, gpm		Temperature Data, oF												
	Gas Meter Cubic Feet (1)	Gas Meter Cubic Feet (2)	Gas Meter Cubic Feet (amb)	Sample Rate, cfm (1)	Sample Rate, cfm (2)	Orifice dH (1)	Orifice dH (2)	Orifice dH (amb)	Meter oF (1)	Meter oF (2)	Meter oF (amb)	Meter Vac. In. Hg. (1)	Meter Vac. In. Hg. (2)	Dilution Tunnel Temp.	Dilution Tunnel dP	Pro. Rate (%) (1)	Pro. Rate (%) (2)	Scale Reading	Weight Change	Load Side Liquid Flow Rate	Boiler Side Liquid Flow Rate (optional)	Thermopile ΔT	Boiler to Heat Exch. Temp.	Heat Exch to Boiler Temp.	Inlet Load Temp.	Outlet Load Temp.	Stack	Filter (1)	Filter (2)	Ambient		Specific Heat of Inlet Water (BTU/lb-°F)	Mass Flow Rate of Inlet Water (lb/min)	Heat Output, Btu
49	7.823	7.802		0.16	0.16	1.34	1.06	0.25	76	75	66	1.9	1.4	70	0.015	97	96	113.0	-0.14	0.59	15.49	120.94	178.95	175.43	57.65	178.59	158	68	68	66		1.001	4.904	594
50	7.983	7.963		0.16	0.16	1.34	1.06	0.25	76	75	65	1.89	1.4	70	0.014	101	100	113.1	-0.12	0.62	15.48	120.87	178.81	175.28	57.67	178.54	155	68	68	65		1.001	5.203	630
51	8.144	8.123		0.16	0.16	1.34	1.05	0.25	76	76	66	1.91	1.4	70	0.016	95	93	113.0	0.05	0.61	15.56	120.47	178.40	174.90	57.71	178.18	153	68	68	66		1.001	5.042	608
52	8.304	8.282		0.16	0.16	1.35	1.05	0.25	76	76	66	1.91	1.4	70	0.014	101	99	113.1	-0.05	0.63	15.51	119.99	178.21	174.69	57.84	177.83	150	68	68	66		1.001	5.242	630
53	8.464	8.443		0.16	0.16	1.35	1.06	0.25	76	76	66	1.89	1.4	70	0.014	101	100	113.0	0.06	0.58	15.54	119.73	178.07	174.57	58.00	177.73	148	68	68	66		1.001	4.854	582
54	8.625	8.603		0.16	0.16	1.35	1.05	0.25	76	76	66	1.9	1.4	69	0.015	98	96	113.0	0.04	0.61	15.48	119.37	177.84	174.49	58.14	177.52	146	67	68	66		1.001	5.044	603
55	8.785	8.763		0.16	0.16	1.35	1.06	0.25	76	76	66	1.91	1.4	69	0.015	97	96	113.0	0.02	0.62	15.48	118.93	177.45	174.05	58.25	177.18	144	67	68	66		1.001	5.200	619
56	8.945	8.923		0.16	0.16	1.35	1.06	0.25	76	76	66	1.89	1.4	69	0.014	100	99	113.0	-0.05	0.60	15.49	118.74	177.48	174.08	58.34	177.08	142	67	68	66		1.001	5.040	599
57	9.106	9.084		0.16	0.16	1.35	1.06	0.25	76	76	66	1.91	1.4	69	0.015	98	97	113.1	-0.04	0.62	15.52	118.39	177.04	173.87	58.42	176.81	140	67	68	66		1.001	5.200	616
58	9.266	9.244		0.16	0.16	1.35	1.05	0.25	76	76	66	1.9	1.3	69	0.014	100	99	113.0	0.06	0.53	15.49	117.98	176.79	173.51	58.47	176.46	138	67	68	66		1.001	4.391	519
59	9.427	9.404		0.16	0.16	1.34	1.06	0.25	77	76	66	1.9	1.4	70	0.015	98	96	113.0	0.00	0.58	15.54	117.84	176.67	173.39	58.50	176.34	142	67	68	66		1.001	4.874	575
60	9.588	9.564		0.16	0.16	1.35	1.04	0.25	77	76	66	1.91	1.4	78	0.015	98	97	112.9	0.05	0.58	15.41	117.65	176.41	173.14	58.51	176.16	186	68	68	66		1.001	4.872	574
61	9.749	9.724		0.16	0.16	1.34	1.06	0.25	77	76	66	1.89	1.4	77	0.015	98	97	112.7	0.25	0.56	15.45	117.21	176.00	172.66	58.52	175.74	182	68	68	66		1.001	4.708	553
62	9.911	9.884		0.16	0.16	1.35	1.05	0.25	77	76	66	1.87	1.3	72	0.015	98	96	112.9	-0.25	0.60	15.58	117.07	176.04	172.65	58.53	175.60	166	68	68	66		1.001	5.040	591
63	10.072	10.044		0.16	0.16	1.35	1.05	0.25	77	76	66	1.9	1.4	71	0.014	101	100	112.9	0.05	0.60	15.56	116.96	175.88	172.57	58.54	175.51	156	69	68	66		1.001	5.039	590
64	10.232	10.204		0.16	0.16	1.35	1.05	0.25	77	76	66	1.89	1.4	71	0.015	97	96	112.9	0.01	0.62	15.41	116.66	175.48	172.06	58.59	175.26	150	69	68	66		1.001	5.197	607
65	10.393	10.364		0.16	0.16	1.35	1.06	0.25	77	76	66	1.88	1.4	71	0.014	101	100	112.8	0.04	0.58	15.45	116.39	175.27	171.81	58.61	175.00	145	69	68	66		1.001	4.869	567
66	10.554	10.525		0.16	0.16	1.35	1.06	0.25	77	76	66	1.89	1.4	71	0.014	101	100	112.9	-0.01	0.59	15.49	116.10	175.04	171.56	58.61	174.70	141	69	68	66		1.001	4.877	567
67	10.714	10.685		0.16	0.16	1.35	1.06	0.25	77	76	66	1.89	1.4	71	0.014	100	100	112.9	-0.01	0.56	15.51	115.80	174.75	171.45	58.60	174.41	139	69	68	66		1.001	4.664	541
68	10.875	10.845		0.16	0.16	1.34	1.06	0.25	77	77	66	1.9	1.4	72	0.015	98	96	112.9	-0.01	0.62	15.58	115.71	174.63	171.39	58.61	174.31	136	69	68	66		1.001	5.194	602
69	11.036	11.006		0.16	0.16	1.34	1.06	0.25	77	77	66	1.88	1.4	72	0.015	98	97	112.9	0.00	0.60	15.45	115.54	174.41	171.00	58.65	174.20	134	69	68	66		1.001	5.036	583
70	11.197	11.165		0.16	0.16	1.34	1.06	0.25	77	77	66	1.9	1.4	72	0.015	98	96	112.9	-0.05	0.60	15.49	115.05	174.02	170.67	58.73	173.78	132	69	68	66		1.001	5.030	579
71	11.358	11.326		0.16	0.16	1.34	1.05	0.25	77	77	66	1.9	1.4	72	0.015	98	97	112.9	0.04	0.62	15.46	114.67	173.74	170.46	58.81	173.47	130	69	68	66		1.001	5.196	597
72	11.518	11.487		0.16	0.16	1.34	1.06	0.25	77	77	67	1.89	1.4	72	0.014	101	100	112.9	-0.02	0.60	15.50	114.46	173.59	170.24	58.85	173.30	129	69	68	67		1.001	5.031	576
73	11.679	11.646		0.16	0.16	1.34	1.05	0.25	77	77	66	1.9	1.4	71	0.015	98	95	112.8	0.08	0.58	15.50	114.09	173.28	169.95	58.90	172.98	127	69	68	66		1.001	4.868	556
74	11.840	11.807		0.16	0.16	1.35	1.06	0.25	77	77	67	1.91	1.4	71	0.015	98	97	112.9	-0.08	0.60	15.57	113.84	173.06	169.76	58.93	172.77	125	69	68	67		1.001	5.028	573
75	12.001	11.967		0.16	0.16	1.35	1.06	0.25	77	77	67	1.9	1.4	71	0.015	98	96	112.9	-0.03	0.62	15.51	113.50	172.63	169.34	58.94	172.44	124	68	68	67		1.001	5.191	590
76	12.162	12.128		0.16	0.16	1.35	1.05	0.25	77	77	67	1.89	1.4	72	0.015	98	97	112.9	0.05	0.62	15.52	113.23	172.44	169.14	58.96	172.19	123	69	68	67		1.001	5.194	589
77	12.323	12.287		0.16	0.16	1.34	1.06	0.25	77	77	67	1.9	1.4	72	0.014	101	99	112.8	0.14	0.58	15.43	113.11	172.28	168.96	58.92	172.03	121	68	68	67		1.001	4.867	551
78	12.484	12.448		0.16	0.16	1.35	1.06	0.25	77	77	67	1.9	1.4	71	0.014	101	100	112.9	-0.17	0.58	15.46	112.81	171.94	168.62	58.86	171.67	120	68	68	67		1.001	4.869	550
79	12.645	12.609		0.16	0.16	1.35	1.05	0.25	77	77	67	1.9	1.4	71	0.014	101	100	112.8	0.11	0.59	15.52	112.60	171.63	168.35	58.78	171.39	119	68	68	67		1.001	4.875	550
80	12.805	12.769		0.16	0.16	1.35	1.06	0.25	78	77	67	1.89	1.4	71	0.015	97	96	112.8	0.02	0.55	15.53	112.55	171.52	168.29	58.71	171.26	118	68	68	67		1.001	4.546	512
81	12.966	12.929		0.16	0.16	1.35	1.06	0.25	78	77	67	1.89	1.4	72	0.015	98	96	112.8	-0.05	0.62	15.50	112.31	171.24	168.09	58.64	170.95	117	68	68	67		1.001	5.180	582
82	13.127	13.090		0.16	0.16	1.35	1.05	0.25	78	77	67	1.89	1.4	71	0.015	98	97	112.9	-0.10	0.63	15.48	112.03	170.91	167.67	58.63	170.67	115	68	68	67		1.001	5.226	586
83	13.288	13.250		0.16	0.16	1.35	1.06	0.25	78	77	67	1.89	1.4	71	0.015	98	96	112.8	0.16	0.60	15.47	111.90	170.81	167.52	58.62	170.52	114	68	68	67		1.001	5.029	563
84	13.449	13.410		0.16	0.16	1.35	1.06	0.25	78	77	67	1.89	1.4	71	0.015	98	96	112.8	-0.06	0.56	15.51	111.60	170.51	167.24	58.61	170.21	113	68	68	67		1.001	4.666	521
85	13.610	13.571		0.16	0.16	1.35	1.06	0.25	78	77	67	1.9	1.4	71	0.015	98	97	112.8	-0.01	0.64	15.56	111.27	170.16	166.94	58.63	169.90	112	68	68	67		1.001	5.350	596
86	13.771	13.731		0.16	0.16	1.35	1.05	0.25	78	77	67	1.91	1.4	71	0.015	98	96	112.8	0.06	0.62	15.55	110.92	169.74	166.50	58.64	169.56	111	68	68	67		1.001	5.191	576
87	13.932	13.891		0.16	0.16	1.35	1.06	0.25	78	77	67	1.89	1.4	72	0.015	98	96	112.9	-0.12	0.58	15.47	110.61	169.55	166.29	58.66	169.27	111	68	68	67		1.001	4.870	539
88	14.093	14.052		0.16	0.16	1.35	1.06	0.25	78	77	67	1.9	1.4	71	0.014	101	100	112.8	0.06	0.66	15.51	110.39	169.32	166.07	58.68	169.07	110	68	68	67		1.001	5.521	610
89	14.254	14.212		0.16	0.16	1.35	1.06	0.25	78	78	67	1.89	1.4	71	0.014	101	99	112.8	0.04	0.58	15.48	110.05	169.07	165.73	58.71	168.76	109	68	68	67		1.001	4.871	537
90	14.415	14.372		0.16	0.16	1.35	1.06	0.25	78	78	67	1.9	1.4	71	0.014	101	99	112.8	-0.01	0.62	15.49	109.88	168.85	165.57	58.77	168.65	108	68	68	67		1.001	5.193	571
91	14.576	14.533		0.16	0.16	1.35	1.05	0.25	78	78	67	1.91	1.4	73	0.014	101	100	112.7	0.11	0.57	15.53	109.53	168.60	165.34	58.83	168.36	143	69	68	67		1.001	4.712	517
92	14.737	14.693		0.16	0.16	1.35	1.05	0.25	78	78	67	1.91	1.4	79	0.015	98	97	112.7	0.00	0.60	15.51	109.15	168.26	165.04	58.92	168.07	168	69	68	67		1.001	5.031	550
93	14.898	14.853		0.16	0.16	1.35	1.06	0.25	78	78	67	1.9	1.4	74	0.014	101	100	112.9	-0.16	0.60	15.52	108.77	168.04	164.80	59.00	167.76	149	69	68	67		1.001	5.030	548
94	15.059	15.014		0.16	0.16	1.35	1.06	0.25	78	78	67	1.89	1.4	74	0.014	101	100	112.6	0.27	0.58	15.51	108.52	167.88	164.62	59.07	167.59	137	69	68	67		1.001	4.867	529
95	15.220	15.174		0.16	0.16	1.35	1.06	0.25	78	78	68	1.9	1.4	73	0.015	98	96	112.9	-0.30	0.62	15.46	108.15	167.55	164.34	59.16	167.31	129	69	68	68		1.001	5.197	563
96	15.381	15.334		0.16	0.16	1.35	1.06	0.25	78	78	67	1.91	1.4	72	0.015	98	96	112.7	0.20	0.55	15.52	107.91	167.38	164.46	59.10	167.00	125	69	68	67		1.001	4.550	492
97	15.542	15.494		0.16	0.16	1.36	1.06	0.25	78	78	68	1.91	1.4	71	0.015	98	96	112.5	0.15	0.62	15.49	108.01	167.14	164.01	58.89	166.90	121	69	68	68		1.001	5.187	561
98	15.703	15.655		0.16	0.16	1.35	1.06	0.25	78	78	68	1.9	1.4	71	0.015	98	97	112.6	-0.08	0.59	15.58	108.02	166.88	163.72	58.62	166.64	119	69	68	68		1.001	4.877	527
99	15.864	15.815		0.16	0.16	1.35	1.05	0.25	78	78	68	1.89	1.4	71	0.014	101	99	112.8	-0.17	0.60	15.47	108.00	166.67	163.51	58.38	166.38	117	69	68	68		1.001	5.033	544
100	16.025	15.976		0.16	0.16	1.35	1.06	0.25	78	78	67	1.89	1.4	70	0.014	101	100	112.7	0.04	0.64	15.46	107.90	166.36	163.15	58.17	166.07	115	68	68	67		1.001	5.365	580
101	16.186	16.137		0.16	0.16	1.35	1.05	0.25	78	78	67	1.9	1.4	70	0.015	97	96	112.7	0.05	0.62	15.47	107.80	166.08	162.87	57.98	165.78	113	68	68	67		1.001	5.201	561
102	16.347	16.296		0.16	0.16	1.35	1.06	0.25	78	78	67	1.91	1.4	70	0.013	105	102	112.6	0.06	0.59	15.52	107.73	165.75	162.60	57.84	165.57	112	68	68	67		1.001	4.879	526
103	16.508	16.457		0.16	0.16	1.35	1.06	0.25	78	78	67	1.89	1.4	70	0.014	101	100	112.7	-0.08	0.62	15.51	107.46	165.45	162.23	57.72	165.18	111	68	68	67		1.001	5.202	560
104	16.669	16.618		0.16	0.16	1.35	1.05	0.25	78	78	67	1.89	1.4	70	0.016	94	93	112.8	-0.05	0.59	15.40	107.26	165.17	162.10	57.62	164.88	110	68	68	67		1.001	4.881	524
105	16.830	16.778		0.16	0.16	1.35	1.06	0.25	78	78	67	1.89	1.4	69	0.014	101	99	112.8	-0.02	0.64	15.39	107.18	164.85	161.66	57.54	164.71	109	68	68	67		1.001	5.366	576
106	16.991	16.938		0.16	0.16	1.34	1.06	0.25	78	78	67	1.91	1.4	69	0.014	101	99	112.7	0.06	0.61	15.46	107.01	164.72	161.55	57.48	164.49	108	68	68	67		1.001	5.044	540
107	17.152	17.099		0.16	0.16	1.34	1.06	0.25	78	78	67	1.88	1.4	69	0.015	97	96	112.6	0.09	0.59	15.52	106.78	164.47	161.29	57.41	164.20	107	68	68	67		1.001	4.886	522
108	17.313	17.260		0.16	0.16	1.34	1.05	0.25	79	78	67	1.9	1.4	69	0.014	101	100	112.7	-0.04	0.57	15.52	106.56	164.14	161.14	57.35	163.93	106	68	68	67		1.001	4.723	504
109	17.474	17.419		0.16	0.16	1.34	1.05	0.25	79	78	66	1.88	1.4	69	0.014	101	98	112.6	0.09	0.62	15.48	106.34	163.86	160.74	57.30	163.64	105	68	68	66		1.001	5.205	554

Elapsed Time	Particulate Sampling Data																	Fuel Weight, lb		Flow, gpm		Temperature Data, oF												
	Gas Meter Cubic Feet (1)	Gas Meter Cubic Feet (2)	Gas Meter Cubic Feet (amb)	Sample Rate, cfm (1)	Sample Rate, cfm (2)	Orifice dH (1)	Orifice dH (2)	Orifice dH (amb)	Meter oF (1)	Meter oF (2)	Meter oF (amb)	Meter Vac. In. Hg. (1)	Meter Vac. In. Hg. (2)	Dilution Tunnel Temp.	Dilution Tunnel dP	Pro. Rate (%) (1)	Pro. Rate (%) (2)	Scale Reading	Weight Change	Load Side Liquid Flow Rate	Boiler Side Liquid Flow Rate (optional)	Thermopile ΔT	Boiler to Heat Exch. Temp.	Heat Exch to Boiler Temp.	Inlet Load Temp.	Outlet Load Temp.	Stack	Filter (1)	Filter (2)	Ambient		Specific Heat of Inlet Water (BTU/lb-°F)	Mass Flow Rate of Inlet Water (lb/min)	Heat Output, Btu
110	17.636	17.580		0.16	0.16	1.34	1.06	0.25	78	78	66	1.9	1.4	69	0.014	101	100	112.6	-0.02	0.61	15.44	106.14	163.57	160.43	57.25	163.39	105	68	68	66		1.001	5.049	537
111	17.797	17.741		0.16	0.16	1.34	1.06	0.25	79	78	66	1.89	1.4	69	0.014	101	100	112.6	0.03	0.60	15.53	105.86	163.21	160.07	57.21	163.07	104	68	68	66		1.001	5.029	533
112	17.958	17.901		0.16	0.16	1.34	1.06	0.25	79	78	66	1.89	1.4	69	0.016	94	93	112.6	-0.05	0.61	15.53	105.45	163.10	159.90	57.22	162.67	103	68	68	66		1.001	5.071	535
113	18.119	18.062		0.16	0.16	1.35	1.06	0.25	79	78	66	1.89	1.4	69	0.016	94	93	112.7	-0.03	0.57	15.46	105.29	162.82	159.83	57.32	162.61	102	68	68	66		1.001	4.716	497
114	18.280	18.223		0.16	0.16	1.35	1.06	0.25	79	78	66	1.89	1.4	69	0.014	101	100	112.8	-0.12	0.61	15.57	104.93	162.60	159.51	57.43	162.36	102	68	68	66		1.001	5.122	538
115	18.441	18.383		0.16	0.16	1.35	1.06	0.25	79	78	66	1.91	1.4	69	0.015	97	96	112.6	0.17	0.60	15.46	104.53	162.36	159.24	57.54	162.07	101	68	67	66		1.001	5.027	526
116	18.602	18.544		0.16	0.16	1.35	1.06	0.25	78	78	66	1.89	1.4	69	0.013	105	103	112.7	-0.09	0.55	15.45	104.17	161.98	158.92	57.64	161.81	100	67	67	66		1.001	4.551	475
117	18.763	18.705		0.16	0.16	1.34	1.05	0.25	78	78	66	1.91	1.4	71	0.016	94	93	112.6	0.14	0.60	15.45	103.85	161.80	158.77	57.72	161.57	137	68	68	66		1.001	5.039	524
118	18.924	18.865		0.16	0.16	1.35	1.05	0.25	78	78	66	1.89	1.4	75	0.015	98	96	112.5	0.05	0.57	15.52	103.43	161.44	158.40	57.78	161.21	158	68	68	66		1.001	4.718	489
119	19.085	19.025		0.16	0.16	1.35	1.06	0.25	78	78	66	1.9	1.4	77	0.015	98	96	112.4	0.14	0.60	15.45	103.14	161.20	158.17	57.84	160.98	171	68	68	66		1.001	5.039	520
120	19.246	19.186		0.16	0.16	1.34	1.06	0.25	79	78	66	1.91	1.4	79	0.014	101	101	112.3	0.12	0.61	15.54	102.89	161.03	158.04	57.88	160.78	189	68	68	66		1.001	5.043	520
121	19.407	19.346		0.16	0.16	1.34	1.05	0.25	79	78	66	1.89	1.4	83	0.013	106	104	112.1	0.18	0.59	15.51	102.63	160.79	157.75	57.91	160.55	208	68	68	66		1.001	4.878	501
122	19.568	19.505		0.16	0.16	1.35	1.05	0.25	78	78	66	1.91	1.4	85	0.013	106	104	111.9	0.16	0.64	15.52	102.46	160.65	157.61	57.91	160.37	229	69	69	66		1.001	5.363	550
123	19.729	19.666		0.16	0.16	1.34	1.06	0.25	78	78	67	1.91	1.4	88	0.015	99	98	111.3	0.60	0.55	15.51	102.36	160.60	157.56	57.91	160.27	256	69	69	67		1.001	4.551	466
124	19.890	19.826		0.16	0.16	1.34	1.05	0.25	78	78	67	1.91	1.4	92	0.016	96	95	110.8	0.51	0.62	15.56	102.46	160.68	157.70	57.90	160.35	282	70	69	67		1.001	5.198	533
125	20.050	19.985		0.16	0.16	1.35	1.05	0.25	79	78	67	1.93	1.4	96	0.015	99	98	110.4	0.39	0.64	15.53	102.56	160.98	157.91	57.92	160.48	302	70	70	67		1.001	5.363	551
126	20.211	20.145		0.16	0.16	1.35	1.05	0.25	78	78	67	1.93	1.4	100	0.014	104	102	109.8	0.62	0.64	15.42	103.06	161.57	158.50	57.95	161.02	316	71	70	67		1.001	5.354	552
127	20.372	20.305		0.16	0.16	1.35	1.05	0.25	78	78	67	1.93	1.4	104	0.014	104	102	109.4	0.41	0.60	15.50	103.55	162.09	159.02	58.01	161.55	328	71	71	67		1.001	5.034	522
128	20.532	20.464		0.16	0.16	1.35	1.05	0.25	78	78	67	1.93	1.4	104	0.015	100	98	108.7	0.70	0.64	15.57	104.01	162.51	159.45	58.05	162.06	337	72	71	67		1.001	5.344	557
129	20.692	20.624		0.16	0.16	1.35	1.05	0.25	79	78	67	1.92	1.4	105	0.014	103	102	108.2	0.46	0.60	15.49	104.56	162.98	159.88	57.95	162.51	344	72	72	67		1.001	5.030	527
130	20.853	20.783		0.16	0.16	1.35	1.04	0.25	79	78	67	1.92	1.4	107	0.015	101	98	107.8	0.43	0.63	15.56	105.27	163.67	160.53	57.80	163.07	348	73	72	67		1.001	5.248	553
131	21.013	20.942		0.16	0.16	1.35	1.05	0.25	79	78	67	1.92	1.4	107	0.015	100	98	107.4	0.46	0.60	15.56	106.27	164.49	161.32	57.67	163.94	351	73	73	67		1.001	5.041	536
132	21.174	21.102		0.16	0.16	1.34	1.05	0.25	79	78	67	1.94	1.4	108	0.014	104	103	106.7	0.65	0.60	15.38	106.93	165.09	161.94	57.59	164.52	352	74	73	67		1.001	5.036	539
133	21.335	21.260		0.16	0.16	1.34	1.05	0.25	79	78	66	1.94	1.4	109	0.015	101	98	106.2	0.52	0.64	15.49	107.56	165.79	162.54	57.55	165.10	353	74	73	66		1.001	5.362	577
134	21.495	21.419		0.16	0.16	1.34	1.05	0.25	79	78	66	1.93	1.4	109	0.014	104	102	105.7	0.51	0.57	15.53	108.42	166.51	163.37	57.49	165.91	354	74	74	66		1.001	4.711	511
135	21.655	21.579		0.16	0.16	1.34	1.04	0.25	79	78	66	1.94	1.4	110	0.014	104	103	105.0	0.67	0.60	15.55	109.36	167.36	164.11	57.43	166.79	354	75	74	66		1.001	5.037	551
136	21.815	21.737		0.16	0.16	1.34	1.04	0.25	79	78	66	1.94	1.4	110	0.014	104	102	104.5	0.49	0.64	15.51	110.15	168.14	164.78	57.40	167.55	354	75	74	66		1.001	5.360	591
137	21.975	21.896		0.16	0.16	1.34	1.05	0.25	79	78	66	1.94	1.4	111	0.015	100	99	104.1	0.39	0.57	15.43	111.10	169.05	165.79	57.34	168.44	352	75	75	66		1.001	4.714	524
138	22.136	22.055		0.16	0.16	1.34	1.03	0.25	79	78	66	1.93	1.4	111	0.013	108	106	103.4	0.70	0.60	15.41	111.84	169.72	166.41	57.27	169.11	349	75	75	66		1.001	5.039	564
139	22.295	22.213		0.16	0.16	1.34	1.04	0.25	79	78	66	1.95	1.4	111	0.015	100	98	102.9	0.55	0.59	15.46	112.59	170.39	166.99	57.20	169.78	343	75	75	66		1.001	4.884	550
140	22.456	22.372		0.16	0.16	1.34	1.03	0.25	79	78	66	1.93	1.4	111	0.015	101	99	102.1	0.82	0.57	15.54	113.53	171.37	167.91	57.11	170.64	333	76	75	66		1.001	4.718	536
141	22.616	22.530		0.16	0.16	1.34	1.06	0.25	79	78	66	1.94	1.5	110	0.015	100	98	101.6	0.48	0.64	15.41	114.40	172.00	168.59	57.07	171.46	326	76	75	66		1.001	5.365	615
142	22.776	22.690		0.16	0.16	1.33	1.06	0.25	79	78	66	1.95	1.5	109	0.015	100	99	101.0	0.54	0.62	15.51	115.15	172.77	169.33	57.12	172.28	324	76	76	66		1.001	5.206	600
143	22.935	22.851		0.16	0.16	1.34	1.06	0.25	79	78	66	1.96	1.5	108	0.015	99	100	100.4	0.68	0.64	15.57	115.59	173.40	169.92	57.22	172.81	326	76	76	66		1.001	5.365	621
144	23.095	23.011		0.16	0.16	1.34	1.06	0.25	79	78	66	1.94	1.5	109	0.015	100	99	99.5	0.85	0.58	15.52	116.19	174.09	170.63	57.34	173.52	339	77	76	66		1.001	4.857	565
145	23.255	23.170		0.16	0.16	1.34	1.06	0.25	79	78	66	1.97	1.5	111	0.015	100	99	99.1	0.39	0.60	15.51	116.71	174.90	171.29	57.48	174.19	347	77	76	66		1.001	5.035	588
146	23.415	23.331		0.16	0.16	1.34	1.05	0.25	79	78	67	1.95	1.5	111	0.015	100	100	98.4	0.72	0.62	15.51	117.69	175.98	172.36	57.61	175.30	345	77	76	67		1.001	5.204	613
147	23.575	23.490		0.16	0.16	1.34	1.05	0.25	79	78	67	1.96	1.5	111	0.015	100	99	97.8	0.61	0.62	15.53	118.57	177.11	173.48	57.76	176.33	343	77	76	67		1.001	5.167	613
148	23.735	23.650		0.16	0.16	1.33	1.05	0.25	78	78	66	1.95	1.5	111	0.015	100	99	97.1	0.72	0.60	15.41	119.48	178.01	174.38	57.94	177.41	346	77	77	66		1.001	5.041	603
149	23.895	23.809		0.16	0.16	1.33	1.05	0.25	79	78	67	1.97	1.5	113	0.014	104	102	96.5	0.60	0.62	15.55	120.01	178.79	175.09	58.10	178.10	354	78	77	67		1.001	5.200	625
150	24.054	23.968		0.16	0.16	1.32	1.05	0.25	79	78	67	1.97	1.5	114	0.015	100	99	96.0	0.52	0.59	15.59	120.63	179.43	175.71	58.24	178.87	357	78	77	67		1.001	4.878	589
151	24.214	24.127		0.16	0.16	1.32	1.05	0.25	79	78	67	1.97	1.5	114	0.014	104	103	95.3	0.68	0.58	15.52	121.15	180.18	176.49	58.38	179.53	355	78	77	67		1.001	4.870	591
152	24.373	24.287		0.16	0.16	1.32	1.04	0.25	79	78	68	1.97	1.5	114	0.015	100	100	94.5	0.82	0.60	15.54	121.83	180.93	177.19	58.49	180.32	352	78	77	68		1.001	5.030	613
153	24.532	24.445		0.16	0.16	1.33	1.04	0.25	79	78	68	1.97	1.5	114	0.014	103	102	93.9	0.53	0.62	15.35	122.41	181.65	177.92	58.59	181.00	352	78	77	68		1.001	5.190	636
154	24.692	24.605		0.16	0.16	1.32	1.05	0.25	79	78	68	1.97	1.5	106	0.016	97	96	93.5	0.39	0.62	15.44	123.19	182.37	178.69	58.59	181.78	332	78	76	68		1.001	5.192	640
155	24.851	24.764		0.16	0.16	1.33	1.04	0.25	79	78	68	1.96	1.5	90	0.014	101	100	93.3	0.26	0.60	15.51	123.61	182.53	178.87	58.48	182.09	301	77	75	68		1.001	5.033	623
156	25.011	24.923		0.16	0.16	1.34	1.05	0.25	79	78	67	1.96	1.5	85	0.013	105	104	93.2	0.12	0.60	15.49	123.83	182.81	179.15	58.40	182.23	283	75	75	67		1.001	5.036	624
157	25.171	25.084		0.16	0.16	1.33	1.04	0.25	79	78	67	1.94	1.5	80	0.015	98	97	93.0	0.13	0.60	15.46	124.19	183.12	179.44	58.35	182.54	271	74	74	67		1.001	5.038	626
158	25.331	25.241		0.16	0.16	1.33	1.04	0.25	79	78	67	1.95	1.5	79	0.014	101	98	93.0	0.00	0.60	15.43	124.39	183.14	179.48	58.28	182.68	261	73	73	67		1.001	5.034	627
159	25.491	25.401		0.16	0.16	1.34	1.05	0.25	79	78	67	1.95	1.5	77	0.015	97	96	93.0	0.04	0.60	15.51	124.63	183.24	179.55	58.24	182.87	252	72	72	67		1.001	5.033	628
160	25.652	25.561		0.16	0.16	1.34	1.04	0.25	79	78	66	1.95	1.5	76	0.015	98	96	92.8	0.15	0.57	15.55	124.70	183.32	179.88	58.21	182.91	244	72	71	66		1.001	4.721	589
161	25.813	25.720		0.16	0.16	1.33	1.05	0.25	79	78	66	1.93	1.5	75	0.014	101	99	92.8	0.06	0.57	15.51	124.82	183.28	179.96	58.15	182.96	237	71	71	66		1.001	4.755	594
162	25.973	25.880		0.16	0.16	1.34	1.06	0.25	79	78	66	1.94	1.5	75	0.015	97	96	92.9	-0.09	0.59	15.47	124.75	183.15	179.81	58.09	182.85	231	70	70	66		1.001	4.878	609
163	26.134	26.042		0.16	0.16	1.34	1.07	0.25	79	78	67	1.94	1.5	74	0.014	101	101	92.9	0.01	0.55	15.48	124.71	183.11	179.76	58.07	182.78	226	70	70	67		1.001	4.598	574
164	26.294	26.202		0.16	0.16	1.34	1.07	0.25	79	78	66	1.92	1.5	74	0.014	100	100	92.8	0.12	0.57	15.43	124.58	183.07	179.68	58.13	182.71	221	70	70	66		1.001	4.710	587
165	26.454	26.363		0.16	0.16	1.34	1.07	0.25	79	78	66	1.92	1.5	74	0.015	97	97	92.8	-0.03	0.57	15.39	124.56	183.11	179.75	58.21	182.77	216	69	70	66		1.001	4.715	588
166	26.615	26.525		0.16	0.16	1.34	1.08	0.25	79	78	66	1.93	1.4	73	0.013	105	105	92.7	0.05	0.57	15.45	124.21	182.79	179.40	58.27	182.48	213	69	70	66		1.001	4.717	587
167	26.776	26.688		0.16	0.16	1.34	1.08	0.25	79	78	66	1.92	1.4	72	0.014	101	101	93.0	-0.24	0.57	15.46	123.98	182.60	179.25	58.33	182.32	211	69	69	66		1.001	4.716	585
168	26.936	26.850		0.16	0.16	1.33	1.08	0.25	79	78	66	1.94	1.4	71	0.015	97	97	92.8	0.16	0.60	15.45	123.82	182.55	179.18	58.38	182.20	207	69	69	66		1.001	5.035	624
169	27.097	27.012		0.16	0.16	1.33	1.09	0.25	79	78	66	1.93	1.4	71	0.016	94	94	92.8	0.01	0.62	15.49	123.53	182.22	178.75	58.46	181.99	204	69	69	66		1.001	5.198	643
170	27.257	27.174		0.16	0.16	1.34	1.09	0.25	79	78	66	1.92	1.4	71	0.015	97	97	92.8	0.04	0.60	15.45	123.17	181.99	178.45	58.51	181.68	199	69	69	66		1.001	5.033	621

Elapsed Time	Particulate Sampling Data																	Fuel Weight, lb		Flow, gpm		Temperature Data, oF												
	Gas Meter Cubic Feet (1)	Gas Meter Cubic Feet (2)	Gas Meter Cubic Feet (amb)	Sample Rate, cfm (1)	Sample Rate, cfm (2)	Orifice dH (1)	Orifice dH (2)	Orifice dH (amb)	Meter oF (1)	Meter oF (2)	Meter oF (amb)	Meter Vac. In. Hg. (1)	Meter Vac. In. Hg. (2)	Dilution Tunnel Temp.	Dilution Tunnel dP	Pro. Rate (%) (1)	Pro. Rate (%) (2)	Scale Reading	Weight Change	Load Side Liquid Flow Rate	Boiler Side Liquid Flow Rate (optional)	Thermopile ΔT	Boiler to Heat Exch. Temp.	Heat Exch to Boiler Temp.	Inlet Load Temp.	Outlet Load Temp.	Stack	Filter (1)	Filter (2)	Ambient		Specific Heat of Inlet Water (BTU/lb-°F)	Mass Flow Rate of Inlet Water (lb/min)	Heat Output, Btu
171	27.418	27.338		0.16	0.16	1.34	1.08	0.25	79	78	67	1.91	1.4	71	0.015	97	98	92.9	-0.09	0.30	15.58	122.40	182.28	180.66	58.71	181.11	195	69	69	67		1.001	2.464	302
172	27.579	27.500		0.16	0.16	1.34	1.08	0.25	79	78	66	1.91	1.4	71	0.015	97	97	92.7	0.18	0.31	15.51	122.88	182.70	181.16	58.85	181.72	192	69	69	66		1.001	2.622	323
173	27.739	27.662		0.16	0.16	1.34	1.09	0.25	79	78	66	1.92	1.4	71	0.014	100	101	92.8	-0.15	0.30	15.54	123.25	182.88	181.39	58.98	182.23	188	69	69	66		1.001	2.468	305
174	27.900	27.825		0.16	0.16	1.34	1.09	0.25	79	78	67	1.91	1.4	71	0.015	97	98	92.9	-0.10	0.28	15.41	122.97	183.03	181.52	59.13	182.10	185	69	69	67		1.001	2.304	284
175	28.061	27.988		0.16	0.16	1.34	1.09	0.25	79	78	67	1.91	1.4	71	0.014	101	101	92.8	0.13	0.30	15.52	122.89	183.06	181.53	59.37	182.26	181	69	69	67		1.001	2.464	303
176	28.221	28.151		0.16	0.16	1.34	1.09	0.25	79	78	67	1.91	1.4	71	0.015	97	98	92.7	0.10	0.51	15.50	123.01	182.93	180.03	59.56	182.58	178	69	69	67		1.001	4.226	520
177	28.382	28.313		0.16	0.16	1.35	1.09	0.25	79	78	67	1.91	1.4	71	0.015	97	97	92.7	-0.03	0.50	15.45	122.28	182.55	179.70	59.86	182.14	175	69	69	67		1.001	4.206	515
178	28.543	28.475		0.16	0.16	1.35	1.09	0.25	79	78	67	1.92	1.4	73	0.015	98	97	92.7	0.04	0.45	15.45	121.91	182.29	179.40	60.00	181.91	172	69	69	67		1.001	3.743	457
179	28.704	28.638		0.16	0.16	1.35	1.09	0.25	79	78	67	1.92	1.4	72	0.016	94	95	92.8	-0.07	0.47	15.48	121.68	182.17	179.34	60.09	181.77	169	69	69	67		1.001	3.904	476
180	28.864	28.801		0.16	0.16	1.35	1.09	0.25	79	78	67	1.92	1.4	71	0.014	100	101	92.8	-0.07	0.49	15.39	121.65	182.14	179.30	60.08	181.73	166	69	69	67		1.001	4.059	494
181	29.025	28.964		0.16	0.16	1.35	1.09	0.25	79	78	67	1.92	1.4	71	0.015	97	98	92.7	0.11	0.49	15.54	121.66	181.93	179.08	59.96	181.61	163	68	69	67		1.001	4.071	496
182	29.186	29.126		0.16	0.16	1.34	1.09	0.25	79	78	67	1.93	1.4	71	0.015	97	97	92.8	-0.11	0.47	15.57	121.33	181.56	178.71	59.80	181.13	161	68	69	67		1.001	3.954	480
183	29.347	29.289		0.16	0.16	1.35	1.09	0.25	79	78	67	1.91	1.4	71	0.014	101	101	92.7	0.14	0.47	15.48	121.44	181.51	178.71	59.65	181.09	158	68	68	67		1.001	3.903	475
184	29.508	29.452		0.16	0.16	1.34	1.09	0.25	79	78	66	1.92	1.4	71	0.014	101	101	92.7	0.00	0.47	15.48	121.34	181.35	178.55	59.53	180.87	156	68	68	66		1.001	3.908	475
185	29.669	29.616		0.16	0.16	1.35	1.09	0.25	79	78	66	1.92	1.4	70	0.016	94	95	92.9	-0.17	0.51	15.46	121.28	181.11	178.30	59.45	180.73	154	68	68	66		1.001	4.231	514
186	29.830	29.778		0.16	0.16	1.35	1.09	0.25	79	78	66	1.92	1.4	70	0.015	97	97	92.8	0.09	0.47	15.47	121.34	181.10	178.28	59.35	180.70	151	68	68	66		1.001	3.910	475
187	29.991	29.940		0.16	0.16	1.35	1.09	0.25	79	78	66	1.92	1.4	69	0.015	97	97	92.8	-0.01	0.47	15.57	121.06	180.78	178.05	59.31	180.37	149	68	68	66		1.001	3.913	474
188	30.152	30.103		0.16	0.16	1.35	1.09	0.25	79	78	65	1.92	1.4	70	0.014	101	101	92.8	-0.01	0.49	15.39	121.06	180.62	177.81	59.25	180.30	147	68	68	65		1.001	4.076	494
189	30.313	30.266		0.16	0.16	1.35	1.09	0.25	79	78	65	1.92	1.4	71	0.013	105	105	92.7	0.13	0.49	15.51	120.77	180.37	177.56	59.18	179.95	145	68	68	65		1.001	4.073	493
190	30.474	30.430		0.16	0.16	1.35	1.09	0.25	79	78	65	1.91	1.4	70	0.015	97	98	92.9	-0.20	0.53	15.54	120.49	180.12	177.09	59.16	179.65	143	68	68	65		1.001	4.397	530
191	30.635	30.593		0.16	0.16	1.34	1.08	0.25	79	78	66	1.92	1.4	70	0.015	97	98	92.8	0.08	0.57	15.46	120.20	179.70	176.66	59.26	179.46	141	68	68	66		1.001	4.722	568
192	30.796	30.755		0.16	0.16	1.34	1.09	0.25	79	78	66	1.93	1.4	70	0.014	101	100	93.0	-0.18	0.55	15.54	119.67	179.41	176.35	59.36	179.04	139	68	68	66		1.001	4.556	546
193	30.956	30.918		0.16	0.16	1.34	1.09	0.25	79	78	66	1.92	1.4	70	0.015	97	98	92.9	0.06	0.55	15.49	119.41	179.18	176.17	59.44	178.86	137	68	68	66		1.001	4.559	545
194	31.117	31.081		0.16	0.16	1.35	1.09	0.25	79	78	66	1.92	1.4	70	0.014	101	101	92.8	0.13	0.55	15.39	119.19	178.99	175.97	59.47	178.66	136	68	68	66		1.001	4.553	543
195	31.278	31.244		0.16	0.16	1.34	1.09	0.25	79	78	66	1.93	1.4	70	0.016	94	95	92.8	0.02	0.53	15.51	118.87	178.71	175.61	59.50	178.37	134	68	68	66		1.001	4.390	523
196	31.439	31.407		0.16	0.16	1.34	1.09	0.25	79	78	66	1.91	1.4	70	0.015	97	98	92.7	0.05	0.51	15.51	118.59	178.44	175.29	59.55	178.13	150	68	68	66		1.001	4.224	501
197	31.599	31.569		0.16	0.16	1.33	1.08	0.25	79	78	66	1.94	1.4	80	0.015	98	98	92.5	0.17	0.57	15.53	118.12	178.01	174.85	59.60	177.73	177	69	69	66		1.001	4.714	557
198	31.760	31.732		0.16	0.16	1.34	1.08	0.25	79	78	66	1.93	1.4	75	0.014	101	102	92.5	0.07	0.51	15.57	117.62	177.70	174.51	59.67	177.29	167	68	68	66		1.001	4.244	500
199	31.921	31.895		0.16	0.16	1.34	1.09	0.25	79	78	66	1.91	1.4	71	0.016	94	95	92.5	0.00	0.57	15.39	117.55	177.56	174.40	59.74	177.29	156	68	68	66		1.001	4.715	555
200	32.081	32.058		0.16	0.16	1.34	1.09	0.25	79	78	66	1.92	1.4	70	0.014	100	101	92.5	0.00	0.56	15.55	117.19	177.33	174.24	59.83	177.01	148	68	68	66		1.001	4.646	545
201	32.242	32.220		0.16	0.16	1.34	1.08	0.25	79	78	66	1.91	1.4	70	0.015	97	97	92.4	0.05	0.57	15.43	116.90	177.07	174.05	59.92	176.82	142	68	68	66		1.001	4.712	551
202	32.403	32.383		0.16	0.16	1.34	1.09	0.25	79	78	66	1.93	1.4	70	0.013	104	105	92.4	0.00	0.55	15.49	116.51	176.84	173.80	60.04	176.55	139	68	68	66		1.001	4.552	531
203	32.564	32.546		0.16	0.16	1.34	1.09	0.25	79	78	67	1.92	1.4	70	0.013	104	105	92.4	0.02	0.55	15.51	116.19	176.69	173.66	60.14	176.33	136	68	68	67		1.001	4.549	529
204	32.725	32.710		0.16	0.16	1.34	1.09	0.25	79	78	68	1.93	1.4	70	0.014	101	102	92.4	0.00	0.51	15.57	115.93	176.45	173.46	60.25	176.19	134	68	68	68		1.001	4.222	490
205	32.886	32.873		0.16	0.16	1.34	1.09	0.25	79	78	68	1.92	1.4	70	0.015	97	98	92.4	-0.02	0.53	15.48	115.58	176.23	173.21	60.35	175.93	132	68	68	68		1.001	4.388	508
206	33.047	33.035		0.16	0.16	1.34	1.09	0.25	79	78	67	1.92	1.4	70	0.015	97	97	92.4	0.01	0.56	15.49	115.27	175.93	172.99	60.45	175.72	130	68	68	67		1.001	4.706	543
207	33.207	33.198		0.16	0.16	1.34	1.09	0.25	79	78	67	1.93	1.4	71	0.015	97	98	92.5	-0.11	0.55	15.53	114.92	175.83	172.84	60.53	175.45	128	68	68	67		1.001	4.549	523
208	33.368	33.361		0.16	0.16	1.34	1.09	0.25	79	78	67	1.91	1.4	71	0.016	94	95	92.4	0.08	0.55	15.47	114.57	175.53	172.54	60.61	175.18	126	68	68	67		1.001	4.550	522
209	33.529	33.525		0.16	0.16	1.34	1.09	0.25	79	78	67	1.92	1.4	71	0.013	105	106	92.4	0.06	0.55	15.48	114.34	175.25	172.24	60.68	175.03	125	68	68	67		1.001	4.546	520
210	33.690	33.688		0.16	0.16	1.34	1.09	0.25	79	78	67	1.92	1.4	71	0.016	94	95	92.4	-0.06	0.56	15.64	113.95	174.97	172.03	60.72	174.67	123	68	68	67		1.001	4.702	536
211	33.851	33.850		0.16	0.16	1.35	1.09	0.25	79	78	67	1.91	1.4	71	0.014	101	101	92.6	-0.11	0.56	15.54	113.75	174.80	171.88	60.74	174.49	122	68	68	67		1.001	4.702	535
212	34.012	34.013		0.16	0.16	1.35	1.09	0.25	79	78	67	1.93	1.4	71	0.014	101	101	92.5	0.05	0.54	15.50	113.47	174.53	171.54	60.76	174.23	121	68	68	67		1.001	4.539	516
213	34.172	34.176		0.16	0.16	1.34	1.09	0.25	79	78	67	1.93	1.4	71	0.016	94	95	92.6	-0.06	0.55	15.39	113.24	174.34	171.37	60.78	174.02	119	68	68	67		1.001	4.545	515
214	34.333	34.340		0.16	0.16	1.35	1.09	0.25	79	78	67	1.91	1.4	71	0.016	94	95	92.4	0.16	0.51	15.42	112.99	174.05	171.10	60.79	173.76	118	68	68	67		1.001	4.223	478
215	34.494	34.502		0.16	0.16	1.35	1.08	0.25	79	78	67	1.91	1.4	72	0.015	97	97	92.5	-0.13	0.53	15.54	112.80	173.88	170.96	60.78	173.58	117	68	68	67		1.001	4.409	498
216	34.655	34.665		0.16	0.16	1.34	1.09	0.25	79	78	66	1.91	1.4	73	0.015	98	98	92.5	0.02	0.57	15.51	112.51	173.71	170.74	60.76	173.27	116	68	68	66		1.001	4.715	531
217	34.816	34.828		0.16	0.16	1.35	1.09	0.25	79	78	66	1.93	1.4	71	0.014	101	101	92.5	0.01	0.50	15.43	112.41	173.40	170.43	60.71	173.12	115	68	68	66		1.001	4.143	466
218	34.977	34.991		0.16	0.16	1.35	1.09	0.25	79	78	65	1.93	1.4	71	0.015	97	98	92.4	0.07	0.55	15.47	112.30	173.19	170.22	60.53	172.83	114	68	68	65		1.001	4.557	512
219	35.138	35.155		0.16	0.16	1.35	1.09	0.25	79	78	65	1.92	1.4	71	0.014	101	102	92.5	-0.09	0.53	15.52	112.27	173.00	170.03	60.33	172.61	113	68	68	65		1.001	4.395	494
220	35.299	35.317		0.16	0.16	1.34	1.09	0.25	79	78	65	1.92	1.4	71	0.014	101	101	92.5	-0.01	0.53	15.53	112.25	172.66	169.72	60.10	172.34	112	68	68	65		1.001	4.397	494
221	35.460	35.480		0.16	0.16	1.34	1.09	0.25	79	78	66	1.92	1.4	72	0.015	97	98	92.5	-0.02	0.57	15.44	112.28	172.53	169.62	59.90	172.18	111	68	68	66		1.001	4.718	530
222	35.621	35.643		0.16	0.16	1.34	1.09	0.25	79	78	66	1.92	1.4	71	0.014	101	101	92.5	0.07	0.55	15.50	112.04	172.22	169.40	59.88	171.93	110	68	67	66		1.001	4.552	511
223	35.782	35.806		0.16	0.16	1.34	1.09	0.25	79	78	66	1.92	1.4	71	0.014	101	101	92.5	-0.02	0.55	15.46	111.68	171.94	169.09	59.96	171.63	109	68	67	66		1.001	4.550	509
224	35.943	35.970		0.16	0.16	1.34	1.09	0.25	79	78	67	1.92	1.4	71	0.014	101	102	92.6	-0.13	0.57	15.54	111.38	171.77	168.92	60.07	171.45	109	67	67	67		1.001	4.712	525
225	36.104	36.133		0.16	0.16	1.34	1.09	0.25	79	78	66	1.91	1.4	71	0.015	97	98	92.6	0.03	0.53	15.44	110.86	171.44	168.58	60.24	171.10	108	67	67	66		1.001	4.392	487
226	36.265	36.296		0.16	0.16	1.35	1.09	0.25	78	78	66	1.91	1.4	71	0.015	98	98	92.6	-0.04	0.55	15.46	110.53	171.28	168.41	60.36	170.89	107	67	67	66		1.001	4.554	504
227	36.426	36.459		0.16	0.16	1.35	1.09	0.25	78	78	66	1.91	1.4	71	0.015	98	98	92.6	0.02	0.55	15.42	110.26	170.99	168.16	60.46	170.73	106	67	67	66		1.001	4.551	502
228	36.587	36.621		0.16	0.16	1.34	1.09	0.25	78	78	66	1.91	1.4	74	0.015	98	97	92.6	0.00	0.57	15.43	109.99	170.76	167.91	60.52	170.51	139	68	68	66		1.001	4.707	518
229	36.748	36.785		0.16	0.16	1.34	1.08	0.25	78	78	67	1.92	1.4	77	0.015	98	99	92.4	0.24	0.53	15.57	109.56	170.34	167.49	60.55	170.12	151	68	68	67		1.001	4.386	481
230	36.909	36.947		0.16	0.16	1.34	1.09	0.25	78	78	67	1.92	1.4	72	0.016	94	94	92.3	0.10	0.53	15.57	109.16	170.04	167.13	60.56	169.72	137	68	68	67		1.001	4.389	480
231	37.070	37.110		0.16	0.16	1.34	1.09	0.25	78	78	67	1.93	1.4	71	0.015	98	98	92.4	-0.08	0.55	15.51	108.95	169.90	166.98	60.53	169.48	127	68	68	67		1.001	4.551	496

Elapsed Time	Particulate Sampling Data																	Fuel Weight, lb		Flow, gpm		Temperature Data, oF												
	Gas Meter Cubic Feet (1)	Gas Meter Cubic Feet (2)	Gas Meter Cubic Feet (amb)	Sample Rate, cfm (1)	Sample Rate, cfm (2)	Orifice dH (1)	Orifice dH (2)	Orifice dH (amb)	Meter oF (1)	Meter oF (2)	Meter oF (amb)	Meter Vac. In. Hg. (1)	Meter Vac. In. Hg. (2)	Dilution Tunnel Temp.	Dilution Tunnel dP	Pro. Rate (%) (1)	Pro. Rate (%) (2)	Scale Reading	Weight Change	Load Side Liquid Flow Rate	Boiler Side Liquid Flow Rate (optional)	Thermopile ΔT	Boiler to Heat Exch. Temp.	Heat Exch to Boiler Temp.	Inlet Load Temp.	Outlet Load Temp.	Stack	Filter (1)	Filter (2)	Ambient		Specific Heat of Inlet Water (BTU/lb-°F)	Mass Flow Rate of Inlet Water (lb/min)	Heat Output, Btu
232	37.230	37.273		0.16	0.16	1.34	1.09	0.25	78	78	67	1.93	1.4	71	0.014	100	101	92.3	0.05	0.51	15.50	108.87	169.62	166.74	60.52	169.39	122	68	68	67		1.001	4.216	460
233	37.391	37.436		0.16	0.16	1.34	1.09	0.25	78	78	67	1.92	1.4	71	0.014	101	101	92.3	0.04	0.56	15.55	108.60	169.44	166.50	60.50	169.10	118	68	68	67		1.001	4.706	512
234	37.552	37.600		0.16	0.16	1.34	1.09	0.25	78	78	66	1.91	1.4	71	0.013	105	106	92.2	0.11	0.55	15.51	108.54	169.25	166.35	60.46	169.00	115	68	68	66		1.001	4.545	494
235	37.713	37.762		0.16	0.16	1.34	1.09	0.25	79	78	67	1.93	1.4	71	0.014	101	101	92.2	-0.07	0.49	15.48	108.28	168.92	166.07	60.39	168.67	112	68	68	67		1.001	4.089	443
236	37.873	37.925		0.16	0.16	1.34	1.09	0.25	79	78	66	1.92	1.4	71	0.015	97	98	92.4	-0.14	0.53	15.48	108.16	168.80	165.87	60.31	168.48	111	68	68	66		1.001	4.386	475
237	38.034	38.088		0.16	0.16	1.34	1.09	0.25	78	78	67	1.92	1.4	71	0.015	98	98	92.4	-0.03	0.53	15.52	108.02	168.52	165.67	60.28	168.30	110	68	68	67		1.001	4.385	474
238	38.195	38.251		0.16	0.16	1.34	1.09	0.25	79	78	67	1.92	1.4	71	0.013	105	105	92.4	0.03	0.53	15.52	107.76	168.22	165.36	60.24	168.00	108	68	68	67		1.001	4.389	474
239	38.356	38.414		0.16	0.16	1.34	1.09	0.25	79	78	67	1.93	1.4	71	0.015	97	98	92.6	-0.22	0.55	15.43	107.48	167.94	165.15	60.17	167.65	107	68	68	67		1.001	4.544	489
240	38.517	38.577		0.16	0.16	1.34	1.09	0.25	79	78	67	1.91	1.4	71	0.014	101	101	92.4	0.17	0.57	15.50	107.35	167.78	164.97	60.15	167.49	106	68	68	67		1.001	4.707	506
241	38.678	38.740		0.16	0.16	1.35	1.09	0.25	79	78	67	1.91	1.4	71	0.015	97	98	92.3	0.08	0.55	15.52	107.16	167.53	164.77	60.16	167.31	106	68	68	67		1.001	4.543	487
242	38.839	38.903		0.16	0.16	1.35	1.09	0.25	79	78	67	1.91	1.4	71	0.014	101	101	92.3	0.07	0.56	15.51	106.86	167.33	164.53	60.17	167.03	105	68	68	67		1.001	4.707	504
243	38.999	39.066		0.16	0.16	1.34	1.09	0.25	79	78	67	1.92	1.4	72	0.015	97	98	92.3	-0.05	0.53	15.59	106.60	167.07	164.33	60.19	166.79	104	68	68	67		1.001	4.383	468
244	39.160	39.229		0.16	0.16	1.35	1.09	0.25	79	78	68	1.92	1.4	74	0.016	94	95	92.5	-0.17	0.55	15.44	106.31	166.81	164.02	60.20	166.51	104	68	68	68		1.001	4.545	484
245	39.321	39.392		0.16	0.16	1.35	1.09	0.25	79	78	67	1.92	1.4	72	0.015	97	98	92.3	0.22	0.53	15.56	106.03	166.57	163.80	60.23	166.26	103	68	68	67		1.001	4.384	465
246	39.482	39.554		0.16	0.16	1.34	1.09	0.25	79	78	67	1.9	1.4	71	0.013	105	104	92.4	-0.14	0.51	15.44	105.93	166.30	163.60	60.19	166.12	102	68	68	67		1.001	4.217	447
247	39.643	39.718		0.16	0.16	1.35	1.09	0.25	79	78	67	1.93	1.4	71	0.013	105	106	92.3	0.11	0.53	15.52	105.65	166.07	163.33	60.10	165.75	101	68	68	67		1.001	4.378	463
248	39.804	39.881		0.16	0.16	1.35	1.09	0.25	79	78	67	1.91	1.4	70	0.015	97	98	92.4	-0.12	0.57	15.45	105.57	165.87	163.13	59.98	165.55	101	68	68	67		1.001	4.711	498
249	39.964	40.044		0.16	0.16	1.35	1.09	0.25	79	78	67	1.93	1.4	70	0.013	104	105	92.4	0.06	0.57	15.50	105.56	165.60	162.85	59.82	165.38	100	68	68	67		1.001	4.710	498
250	40.125	40.206		0.16	0.16	1.34	1.09	0.25	79	78	67	1.92	1.4	70	0.015	97	97	92.2	0.19	0.53	15.50	105.38	165.32	162.58	59.63	165.01	100	68	68	67		1.001	4.391	463
251	40.286	40.369		0.16	0.16	1.34	1.09	0.25	79	78	67	1.93	1.4	70	0.015	97	98	92.3	-0.14	0.51	15.49	105.21	165.07	162.35	59.55	164.76	99	68	68	67		1.001	4.239	447
252	40.447	40.532		0.16	0.16	1.35	1.09	0.25	79	78	67	1.92	1.4	69	0.014	101	101	92.4	-0.07	0.51	15.52	105.17	164.89	162.15	59.42	164.59	98	68	68	67		1.001	4.271	450
253	40.608	40.696		0.16	0.16	1.35	1.09	0.25	79	78	67	1.93	1.4	69	0.014	101	102	92.2	0.13	0.53	15.51	104.96	164.66	161.91	59.37	164.34	98	68	68	67		1.001	4.438	466
254	40.769	40.859		0.16	0.16	1.35	1.09	0.25	79	78	66	1.93	1.4	69	0.013	104	105	92.3	-0.07	0.56	15.55	104.90	164.47	161.71	59.28	164.17	98	68	68	66		1.001	4.799	504
255	40.930	41.021		0.16	0.16	1.34	1.08	0.25	79	78	66	1.92	1.4	69	0.015	97	97	92.4	-0.11	0.53	15.49	104.70	164.17	161.48	59.22	163.92	97	68	68	66		1.001	4.442	466
256	41.091	41.184		0.16	0.16	1.35	1.09	0.25	79	78	66	1.92	1.4	69	0.014	101	101	92.4	0.01	0.57	15.51	104.54	163.90	161.22	59.12	163.66	96	68	68	66		1.001	4.713	493
257	41.252	41.347		0.16	0.16	1.35	1.09	0.25	79	78	66	1.91	1.4	69	0.014	101	101	92.4	0.01	0.59	15.50	104.40	163.65	160.95	59.04	163.44	96	67	67	66		1.001	4.875	510
258	41.414	41.511		0.16	0.16	1.35	1.09	0.25	79	78	66	1.92	1.4	69	0.015	98	98	92.5	-0.05	0.53	15.53	104.20	163.44	160.72	58.97	163.17	96	67	67	66		1.001	4.386	458
259	41.574	41.674		0.16	0.16	1.34	1.09	0.25	79	78	66	1.92	1.4	69	0.014	100	101	92.3	0.15	0.51	15.48	104.04	163.22	160.51	58.89	162.93	105	67	67	66		1.001	4.230	441
260	41.735	41.836		0.16	0.16	1.34	1.09	0.25	79	78	66	1.92	1.4	73	0.013	105	105	92.4	-0.07	0.55	15.48	103.85	162.85	160.17	58.79	162.64	134	68	68	66		1.001	4.552	473
261	41.896	41.999		0.16	0.16	1.35	1.09	0.25	79	78	66	1.92	1.4	71	0.016	94	95	92.3	0.09	0.57	15.51	103.62	162.58	159.90	58.68	162.30	133	67	67	66		1.001	4.714	489
262	42.057	42.162		0.16	0.16	1.34	1.09	0.25	79	78	66	1.91	1.4	70	0.014	101	101	92.1	0.18	0.55	15.51	103.46	162.36	159.71	58.59	162.05	123	67	67	66		1.001	4.554	472
263	42.218	42.326		0.16	0.16	1.35	1.09	0.25	79	78	66	1.91	1.4	69	0.015	97	98	92.1	-0.01	0.51	15.44	103.33	162.14	159.48	58.49	161.82	126	67	67	66		1.001	4.234	438
264	42.378	42.489		0.16	0.16	1.34	1.09	0.25	79	78	66	1.91	1.4	75	0.014	100	102	92.1	-0.02	0.57	15.50	103.13	161.79	159.10	58.43	161.56	146	67	68	66		1.001	4.714	487
265	42.539	42.651		0.16	0.16	1.34	1.09	0.25	79	78	66	1.93	1.4	76	0.014	101	101	92.1	0.05	0.55	15.48	102.85	161.60	158.94	58.47	161.33	154	67	67	66		1.001	4.556	469
266	42.700	42.814		0.16	0.16	1.34	1.09	0.25	79	78	66	1.92	1.4	76	0.015	98	98	92.0	0.08	0.53	15.51	102.53	161.35	158.68	58.55	161.08	157	67	68	66		1.001	4.395	451
267	42.861	42.977		0.16	0.16	1.34	1.09	0.25	79	78	66	1.91	1.4	76	0.014	101	102	91.7	0.30	0.55	15.57	102.24	161.12	158.50	58.65	160.88	158	68	68	66		1.001	4.559	467
268	43.021	43.141		0.16	0.16	1.34	1.09	0.25	79	78	66	1.91	1.4	76	0.015	97	99	91.7	0.06	0.55	15.45	101.75	160.78	158.16	58.76	160.51	160	68	68	66		1.001	4.557	464
269	43.182	43.303		0.16	0.16	1.34	1.09	0.25	79	78	66	1.91	1.4	77	0.014	101	101	91.9	-0.22	0.55	15.56	101.50	160.66	158.01	58.87	160.37	161	68	68	66		1.001	4.553	463
270	43.343	43.466		0.16	0.16	1.34	1.09	0.25	79	78	66	1.91	1.4	77	0.014	101	102	91.9	0.01	0.57	15.55	101.13	160.43	157.80	59.00	160.14	161	68	68	66		1.001	4.732	479
271	43.503	43.629		0.16	0.16	1.34	1.09	0.25	79	78	66	1.91	1.4	77	0.015	97	98	91.8	0.04	0.53	15.53	100.80	160.13	157.54	59.14	159.93	161	68	68	66		1.001	4.439	448
272	43.664	43.792		0.16	0.16	1.33	1.09	0.25	79	78	67	1.91	1.4	78	0.016	95	95	91.8	0.02	0.53	15.52	100.40	159.89	157.31	59.27	159.67	162	68	68	67		1.001	4.455	448
273	43.825	43.955		0.16	0.16	1.34	1.09	0.25	79	78	66	1.91	1.4	78	0.015	98	98	91.9	-0.06	0.55	15.45	99.98	159.64	157.05	59.40	159.38	162	68	68	66		1.001	4.553	456
274	43.986	44.118		0.16	0.16	1.34	1.09	0.25	79	78	66	1.92	1.4	78	0.016	95	95	91.6	0.28	0.55	15.48	99.60	159.41	156.81	59.54	159.14	161	68	68	66		1.001	4.553	454
275	44.146	44.281		0.16	0.16	1.34	1.09	0.25	79	78	67	1.93	1.4	78	0.015	97	98	91.8	-0.17	0.53	15.54	99.23	159.05	156.46	59.64	158.87	161	68	68	67		1.001	4.381	435
276	44.307	44.443		0.16	0.16	1.35	1.09	0.25	78	78	66	1.93	1.4	79	0.013	106	105	91.8	-0.05	0.57	15.43	98.90	158.85	156.25	59.70	158.60	161	68	68	66		1.001	4.708	466
277	44.468	44.606		0.16	0.16	1.34	1.09	0.25	79	78	66	1.92	1.4	79	0.014	101	102	91.8	0.04	0.55	15.48	98.58	158.62	156.04	59.76	158.34	161	68	68	66		1.001	4.549	449
278	44.629	44.770		0.16	0.16	1.34	1.09	0.25	79	78	66	1.93	1.4	79	0.015	98	99	91.7	0.05	0.60	15.40	98.33	158.40	155.83	59.81	158.13	161	68	68	66		1.001	5.032	495
279	44.789	44.932		0.16	0.16	1.34	1.08	0.25	79	78	67	1.93	1.4	79	0.014	101	101	91.7	-0.02	0.60	15.44	97.94	158.10	155.56	59.86	157.80	161	69	68	67		1.001	5.033	493
280	44.950	45.095		0.16	0.16	1.34	1.09	0.25	79	78	67	1.92	1.4	79	0.015	98	98	91.7	0.05	0.55	15.56	97.74	157.80	155.31	59.90	157.64	160	69	69	67		1.001	4.544	445
281	45.111	45.257		0.16	0.16	1.34	1.09	0.25	79	78	66	1.92	1.4	79	0.016	95	95	91.7	-0.03	0.51	15.46	97.30	157.51	155.01	59.95	157.25	160	69	69	66		1.001	4.224	411
282	45.272	45.420		0.16	0.16	1.34	1.09	0.25	79	78	67	1.92	1.4	79	0.014	101	102	91.6	0.13	0.56	15.50	97.07	157.29	154.78	59.99	157.06	160	69	69	67		1.001	4.867	473
283	45.432	45.583		0.16	0.16	1.34	1.08	0.25	79	78	67	1.92	1.4	79	0.014	101	102	91.5	0.08	0.58	15.52	96.88	157.10	154.66	60.01	156.89	159	69	69	67		1.001	4.870	472
284	45.594	45.746		0.16	0.16	1.34	1.09	0.25	79	78	67	1.92	1.4	79	0.014	102	102	91.5	0.03	0.53	15.42	96.67	156.92	154.50	60.04	156.71	159	69	69	67		1.001	4.389	425
285	45.754	45.908		0.16	0.16	1.35	1.09	0.25	79	78	67	1.92	1.4	79	0.013	105	105	91.5	-0.02	0.57	15.53	96.28	156.59	154.09	60.08	156.36	159	69	69	67		1.001	4.710	454
286	45.915	46.071		0.16	0.16	1.34	1.09	0.25	79	78	68	1.92	1.4	79	0.015	98	98	91.6	-0.12	0.51	15.52	96.00	156.37	153.83	60.13	156.13	158	69	69	68		1.001	4.223	406
287	46.076	46.235		0.16	0.16	1.34	1.09	0.25	79	78	67	1.91	1.4	79	0.014	101	103	91.4	0.18	0.55	15.46	95.68	156.15	153.60	60.17	155.85	158	69	69	67		1.001	4.549	436
288	46.237	46.397		0.16	0.16	1.33	1.09	0.25	79	78	67	1.93	1.4	79	0.014	101	101	91.5	-0.07	0.56	15.51	95.42	155.83	153.36	60.22	155.64	158	69	69	67		1.001	4.697	449
289	46.398	46.560		0.16	0.16	1.33	1.09	0.25	79	78	67	1.92	1.4	79	0.014	101	102	91.5	0.03	0.56	15.59	95.09	155.60	153.15	60.27	155.36	158	69	69	67		1.001	4.638	442
290	46.558	46.722		0.16	0.16	1.34	1.09	0.25	79	78	67	1.93	1.4	79	0.015	97	98	91.7	-0.25	0.56	15.46	94.81	155.38	152.93	60.33	155.13	157	69	69	67		1.001	4.703	446
291	46.719	46.885		0.16	0.16	1.34	1.09	0.25	79	78	68	1.93	1.4	79	0.014	101	102	91.4	0.35	0.50	15.48	94.53	155.12	152.77	60.39	154.92	157	69	69	68		1.001	4.201	398
292	46.880	47.049		0.16	0.16	1.34	1.09	0.25	79	78	67	1.91	1.4	79	0.014	101	103	91.5	-0.13	0.53	15.52	94.18	154.85	152.39	60.47	154.65	157	69	69	67		1.001	4.382	413

Elapsed Time	Particulate Sampling Data																	Fuel Weight, lb		Flow, gpm		Temperature Data, oF												
	Gas Meter Cubic Feet (1)	Gas Meter Cubic Feet (2)	Gas Meter Cubic Feet (amb)	Sample Rate, cfm (1)	Sample Rate, cfm (2)	Orifice dH (1)	Orifice dH (2)	Orifice dH (amb)	Meter oF (1)	Meter oF (2)	Meter oF (amb)	Meter Vac. in. Hg. (1)	Meter Vac. in. Hg. (2)	Dilution Tunnel Temp.	Dilution Tunnel dP	Pro. Rate (%) (1)	Pro. Rate (%) (2)	Scale Reading	Weight Change	Load Side Liquid Flow Rate	Boiler Side Liquid Flow Rate (optional)	Thermopile ΔT	Boiler to Heat Exch. Temp.	Heat Exch to Boiler Temp.	Inlet Load Temp.	Outlet Load Temp.	Stack	Filter (1)	Filter (2)	Ambient		Specific Heat of Inlet Water (BTU/lb-°F)	Mass Flow Rate of Inlet Water (lb/min)	Heat Output, Btu
293	47.041	47.211		0.16	0.16	1.33	1.08	0.25	79	78	67	1.93	1.4	79	0.015	98	98	91.4	0.06	0.53	15.52	93.86	154.55	152.10	60.55	154.41	157	69	69	67		1.001	4.384	412
294	47.201	47.373		0.16	0.16	1.33	1.09	0.25	79	78	67	1.91	1.4	79	0.015	97	98	91.4	0.02	0.55	15.51	93.49	154.36	151.86	60.61	154.11	158	69	69	67		1.001	4.541	425
295	47.362	47.536		0.16	0.16	1.33	1.08	0.25	79	78	67	1.93	1.4	80	0.014	102	102	91.3	0.11	0.56	15.48	93.13	154.07	151.60	60.67	153.80	159	70	69	67		1.001	4.706	439
296	47.522	47.699		0.16	0.16	1.34	1.09	0.25	79	78	67	1.92	1.4	80	0.012	109	110	91.3	0.06	0.55	15.57	92.91	153.86	151.40	60.72	153.63	160	70	69	67		1.001	4.547	423
297	47.683	47.862		0.16	0.16	1.34	1.09	0.25	79	78	67	1.93	1.4	80	0.014	102	102	91.1	0.12	0.53	15.46	92.66	153.66	151.23	60.77	153.43	163	70	70	67		1.001	4.382	407
298	47.844	48.024		0.16	0.16	1.34	1.08	0.25	79	78	67	1.93	1.4	81	0.013	106	105	91.1	0.02	0.55	15.47	92.46	153.52	151.11	60.81	153.26	166	70	70	67		1.001	4.540	420
299	48.004	48.186		0.16	0.16	1.34	1.08	0.25	79	78	67	1.92	1.4	81	0.013	105	105	91.2	-0.04	0.55	15.58	92.23	153.33	150.91	60.83	153.07	169	70	70	67		1.001	4.544	420
300	48.165	48.349		0.16	0.16	1.34	1.08	0.25	79	78	67	1.92	1.4	81	0.015	98	99	90.9	0.25	0.53	15.47	92.02	153.17	150.77	60.86	152.89	173	70	70	67		1.001	4.386	404
301	48.325	48.512		0.16	0.16	1.34	1.08	0.25	79	78	67	1.92	1.4	81	0.013	105	106	90.8	0.13	0.55	15.51	91.89	153.03	150.62	60.87	152.76	177	70	70	67		1.001	4.544	418
302	48.486	48.675		0.16	0.16	1.34	1.08	0.25	79	78	67	1.93	1.4	82	0.016	95	96	90.6	0.22	0.55	15.55	91.79	152.90	150.49	60.87	152.67	182	70	70	67		1.001	4.545	418
303	48.646	48.837		0.16	0.16	1.35	1.08	0.25	79	78	67	1.92	1.4	83	0.015	98	98	90.7	-0.14	0.51	15.55	91.65	152.86	150.42	60.87	152.52	188	70	70	67		1.001	4.217	387
304	48.807	48.999		0.16	0.16	1.35	1.08	0.25	79	78	67	1.93	1.4	85	0.014	102	102	90.4	0.31	0.53	15.56	91.72	152.83	150.40	60.85	152.57	198	71	70	67		1.001	4.388	403
305	48.967	49.162		0.16	0.16	1.34	1.09	0.25	79	78	67	1.93	1.4	87	0.013	105	107	90.1	0.23	0.53	15.52	91.66	152.76	150.35	60.83	152.49	210	71	70	67		1.001	4.386	402
306	49.128	49.324		0.16	0.16	1.34	1.08	0.25	79	78	67	1.94	1.4	88	0.014	102	102	89.9	0.20	0.56	15.57	91.72	152.82	150.41	60.80	152.51	220	71	71	67		1.001	4.673	429
307	49.288	49.486		0.16	0.16	1.34	1.08	0.25	79	79	67	1.93	1.4	90	0.015	98	99	89.5	0.40	0.56	15.40	91.85	152.95	150.54	60.75	152.60	229	71	71	67		1.001	4.700	432
308	49.449	49.648		0.16	0.16	1.34	1.08	0.25	79	79	67	1.94	1.4	91	0.014	103	102	89.3	0.28	0.52	15.47	92.09	153.16	150.71	60.67	152.76	237	71	71	67		1.001	4.329	399
309	49.609	49.810		0.16	0.16	1.34	1.08	0.25	79	79	67	1.94	1.4	92	0.013	106	106	89.0	0.26	0.54	15.51	92.46	153.54	151.07	60.63	153.09	244	72	71	67		1.001	4.528	419
310	49.770	49.973		0.16	0.16	1.33	1.08	0.25	79	79	67	1.94	1.4	93	0.013	107	107	88.6	0.38	0.55	15.60	92.76	153.92	151.39	60.60	153.36	251	72	72	67		1.001	4.541	422
311	49.930	50.134		0.16	0.16	1.33	1.08	0.25	79	79	67	1.95	1.4	95	0.015	99	98	88.0	0.66	0.52	15.55	93.25	154.30	151.81	60.56	153.81	259	72	72	67		1.001	4.370	408
312	50.091	50.296		0.16	0.16	1.34	1.08	0.25	79	79	67	1.94	1.4	96	0.015	100	99	87.8	0.12	0.53	15.53	93.78	154.86	152.32	60.54	154.32	267	72	72	67		1.001	4.386	412
313	50.251	50.458		0.16	0.16	1.34	1.08	0.25	79	79	67	1.94	1.5	97	0.014	103	103	87.3	0.58	0.58	15.48	94.45	155.54	152.97	60.50	154.94	276	73	72	67		1.001	4.861	460
314	50.411	50.620		0.16	0.16	1.33	1.07	0.25	79	79	67	1.96	1.5	99	0.015	99	99	86.8	0.50	0.57	15.50	95.31	156.38	153.77	60.46	155.77	286	73	73	67		1.001	4.708	449
315	50.571	50.781		0.16	0.16	1.33	1.07	0.25	79	79	67	1.95	1.5	100	0.015	99	99	86.4	0.36	0.56	15.51	96.17	157.15	154.54	60.42	156.59	296	73	73	67		1.001	4.704	453
316	50.731	50.943		0.16	0.16	1.33	1.08	0.25	79	79	67	1.96	1.5	101	0.014	103	103	85.8	0.62	0.53	15.57	96.76	157.78	155.18	60.44	157.20	304	73	73	67		1.001	4.379	424
317	50.890	51.104		0.16	0.16	1.33	1.07	0.25	79	79	67	1.94	1.5	103	0.016	96	96	85.5	0.26	0.51	15.55	97.43	158.54	155.90	60.48	157.91	313	74	73	67		1.001	4.218	411
318	51.050	51.266		0.16	0.16	1.33	1.08	0.25	79	79	67	1.95	1.5	105	0.014	103	104	84.9	0.65	0.53	15.47	98.26	159.50	156.80	60.54	158.80	321	74	74	67		1.001	4.379	431
319	51.210	51.427		0.16	0.16	1.33	1.07	0.25	79	79	67	1.96	1.5	106	0.013	107	107	84.3	0.53	0.51	15.49	99.18	160.37	157.68	60.60	159.78	331	74	74	67		1.001	4.215	419
320	51.370	51.588		0.16	0.16	1.33	1.07	0.25	79	79	67	1.95	1.5	108	0.014	104	103	83.6	0.72	0.53	15.47	100.00	161.31	158.59	60.65	160.65	340	75	75	67		1.001	4.378	438
321	51.530	51.750		0.16	0.16	1.33	1.07	0.25	79	79	67	1.96	1.5	110	0.015	100	100	83.0	0.59	0.53	15.44	100.89	162.34	159.59	60.71	161.60	348	75	75	67		1.001	4.380	442
322	51.689	51.911		0.16	0.16	1.34	1.07	0.25	79	79	67	1.96	1.5	111	0.014	103	103	82.4	0.58	0.60	15.53	102.02	163.47	160.65	60.75	162.77	354	76	75	67		1.001	5.025	513
323	51.849	52.071		0.16	0.16	1.34	1.07	0.25	79	79	67	1.96	1.5	112	0.014	104	103	81.9	0.51	0.56	15.54	103.01	164.57	161.70	60.79	163.80	359	76	76	67		1.001	4.700	485
324	52.009	52.232		0.16	0.16	1.33	1.06	0.25	79	79	67	1.96	1.5	113	0.015	100	100	81.2	0.77	0.54	15.56	104.20	165.75	162.87	60.80	165.00	363	76	76	67		1.001	4.538	473
325	52.169	52.393		0.16	0.16	1.33	1.07	0.25	79	79	68	1.97	1.5	114	0.014	104	104	80.5	0.70	0.55	15.50	105.30	166.97	164.08	60.84	166.14	366	77	77	68		1.001	4.545	479
326	52.329	52.554		0.16	0.16	1.33	1.06	0.25	79	79	67	1.96	1.5	115	0.014	104	104	79.9	0.58	0.51	15.46	106.48	168.13	165.19	60.85	167.32	368	77	77	67		1.001	4.280	456
327	52.488	52.714		0.16	0.16	1.33	1.06	0.25	79	79	67	1.96	1.5	115	0.014	104	103	79.1	0.81	0.54	15.53	107.63	169.26	166.32	60.83	168.46	372	78	77	67		1.001	4.536	489
328	52.647	52.875		0.16	0.16	1.32	1.06	0.25	79	79	67	1.98	1.5	116	0.014	104	104	78.6	0.50	0.54	15.61	108.89	170.58	167.60	60.82	169.71	378	78	78	67		1.001	4.527	494
329	52.806	53.034		0.16	0.16	1.33	1.06	0.25	79	79	68	1.98	1.5	117	0.015	100	99	78.1	0.43	0.54	15.53	110.15	171.86	168.84	60.75	170.90	378	78	78	68		1.001	4.540	501
330	52.966	53.195		0.16	0.16	1.32	1.06	0.25	79	79	67	1.97	1.5	117	0.013	108	108	77.4	0.79	0.53	15.57	111.54	173.13	170.16	60.72	172.26	377	78	78	67		1.001	4.376	489
331	53.125	53.355		0.16	0.16	1.32	1.06	0.25	79	79	67	1.97	1.5	117	0.013	108	107	77.0	0.38	0.51	15.53	112.68	174.25	171.23	60.72	173.39	377	79	78	67		1.001	4.221	476
332	53.284	53.514		0.16	0.16	1.33	1.06	0.25	79	79	67	1.98	1.5	117	0.015	100	99	76.3	0.65	0.54	15.45	113.95	175.45	172.36	60.68	174.63	377	79	78	67		1.001	4.536	517
333	53.444	53.674		0.16	0.16	1.33	1.05	0.25	79	79	67	1.98	1.5	117	0.015	101	100	75.7	0.66	0.56	15.51	115.11	176.63	173.51	60.65	175.76	378	79	78	67		1.001	4.692	541
334	53.603	53.835		0.16	0.16	1.33	1.05	0.25	79	79	68	1.99	1.5	117	0.015	100	100	75.1	0.59	0.53	15.41	116.43	177.87	174.68	60.61	177.05	379	79	79	68		1.001	4.378	510
335	53.763	53.994		0.16	0.16	1.32	1.05	0.25	79	79	68	1.99	1.5	117	0.013	108	107	74.5	0.59	0.51	15.51	117.63	179.15	175.91	60.57	178.20	379	79	79	68		1.001	4.213	496
336	53.922	54.153		0.16	0.16	1.32	1.05	0.25	79	79	67	1.98	1.5	117	0.015	100	99	74.0	0.53	0.52	15.48	118.82	180.33	177.05	60.55	179.37	381	79	79	67		1.001	4.372	520
337	54.081	54.313		0.16	0.16	1.33	1.04	0.25	79	79	68	1.98	1.5	117	0.012	112	112	73.5	0.47	0.51	15.45	120.03	181.51	178.22	60.54	180.57	382	79	79	68		1.001	4.215	507
338	54.241	54.472		0.16	0.16	1.32	1.04	0.25	79	79	68	1.97	1.5	118	0.016	98	96	72.9	0.60	0.56	15.52	121.24	182.64	179.22	60.55	181.79	383	79	79	68		1.001	4.695	570
339	54.400	54.631		0.16	0.16	1.32	1.05	0.25	79	79	68	1.96	1.5	105	0.015	99	98	72.5	0.43	0.54	15.56	122.41	183.74	180.42	60.54	182.95	355	79	78	68		1.001	4.533	556
340	54.560	54.792		0.16	0.16	1.32	1.05	0.25	79	79	68	1.95	1.5	92	0.015	99	98	72.1	0.36	0.52	15.48	123.07	184.37	181.01	60.59	183.66	324	77	77	68		1.001	4.371	539
341	54.719	54.950		0.16	0.16	1.33	1.04	0.25	79	79	68	1.95	1.5	87	0.015	98	96	72.1	-0.02	0.53	15.45	123.56	184.75	181.45	60.64	184.20	305	76	76	68		1.001	4.377	541
342	54.879	55.110		0.16	0.16	1.33	1.05	0.25	80	79	68	1.96	1.5	83	0.014	101	100	71.9	0.23	0.54	15.48	123.79	185.21	181.79	60.71	184.50	291	75	75	68		1.001	4.535	562
343	55.039	55.270		0.16	0.16	1.33	1.04	0.25	80	79	68	1.96	1.5	82	0.014	101	100	71.8	0.07	0.52	15.49	124.07	185.32	181.96	60.78	184.86	279	74	74	68		1.001	4.374	543
344	55.199	55.430		0.16	0.16	1.33	1.05	0.25	80	79	68	1.95	1.5	80	0.015	97	97	71.7	0.12	0.51	15.46	124.10	185.51	182.16	60.85	184.95	268	74	74	68		1.001	4.212	523
345	55.359	55.590		0.16	0.16	1.33	1.06	0.25	80	79	68	1.94	1.5	80	0.013	105	104	71.7	0.00	0.56	15.54	124.09	185.57	182.26	60.92	185.01	259	73	73	68		1.001	4.690	583
346	55.519	55.751		0.16	0.16	1.33	1.06	0.25	80	79	68	1.94	1.5	79	0.014	101	100	71.5	0.22	0.56	15.54	124.08	185.56	182.15	60.98	185.05	252	73	73	68		1.001	4.696	583
347	55.680	55.912		0.16	0.16	1.33	1.06	0.25	80	79	68	1.95	1.5	78	0.014	101	100	71.4	0.04	0.54	15.44	124.01	185.56	182.26	61.03	185.03	245	73	73	68		1.001	4.531	563
348	55.840	56.073		0.16	0.16	1.33	1.06	0.25	80	79	68	1.95	1.5	78	0.015	97	97	71.3	0.13	0.54	15.44	124.07	185.50	182.26	61.06	185.13	236	72	73	68		1.001	4.534	563
349	56.001	56.235		0.16	0.16	1.33	1.06	0.25	80	79	68	1.94	1.5	78	0.012	109	109	71.5	-0.20	0.52	15.51	123.93	185.48	182.24	61.11	185.04	233	72	73	68		1.001	4.370	542
350	56.162	56.396		0.16	0.16	1.33	1.06	0.25	80	79	68	1.95	1.5	77	0.015	98	97	71.4	0.13	0.54	15.53	123.88	185.45	182.16	61.16	185.04	227	72	73	68		1.001	4.534	562
351	56.322	56.557		0.16	0.16	1.34	1.07	0.25	80	79	68	1.94	1.4	76	0.015	97	97	71.3	0.04	0.54	15.44	123.84	185.41	182.22	61.17	185.01	225	72	72	68		1.001	4.534	562
352	56.482	56.719		0.16	0.16	1.33	1.07	0.25	80	79	68	1.94	1.4	75	0.015	97	97	71.5	-0.13	0.52	15.44	123.70	185.37	182.09	61.17	184.88	223	72	72	68		1.001	4.373	542
353	56.642	56.882		0.16	0.16	1.32	1.08	0.25	80	79	68	1.94	1.4	75	0.014	100	101	71.3	0.20	0.53	15.45	123.61	185.16	181.88	61.18	184.79	220	72	72	68		1.001	4.377	542

Elapsed Time	Particulate Sampling Data																	Fuel Weight, lb		Flow, gpm		Temperature Data, oF												
	Gas Meter Cubic Feet (1)	Gas Meter Cubic Feet (2)	Gas Meter Cubic Feet (amb)	Sample Rate, cfm (1)	Sample Rate, cfm (2)	Orifice dH (1)	Orifice dH (2)	Orifice dH (amb)	Meter oF (1)	Meter oF (2)	Meter oF (amb)	Meter Vac. In. Hg. (1)	Meter Vac. In. Hg. (2)	Dilution Tunnel Temp.	Dilution Tunnel dP	Pro. Rate (%) (1)	Pro. Rate (%) (2)	Scale Reading	Weight Change	Load Side Liquid Flow Rate	Boiler Side Liquid Flow Rate (optional)	Thermopile ΔT	Boiler to Heat Exch. Temp.	Heat Exch to Boiler Temp.	Inlet Load Temp.	Outlet Load Temp.	Stack	Filter (1)	Filter (2)	Ambient		Specific Heat of Inlet Water (BTU/lb-°F)	Mass Flow Rate of Inlet Water (lb/min)	Heat Output, Btu
354	56.803	57.044		0.16	0.16	1.32	1.08	0.25	80	79	67	1.93	1.4	74	0.015	97	97	71.4	-0.08	0.53	15.53	123.46	185.11	181.81	61.18	184.64	216	72	72	67		1.001	4.378	541
355	56.963	57.206		0.16	0.16	1.33	1.08	0.25	80	79	67	1.94	1.4	74	0.014	100	101	71.3	0.02	0.51	15.51	123.38	184.95	181.64	61.13	184.51	212	72	72	67		1.001	4.216	521
356	57.123	57.368		0.16	0.16	1.33	1.08	0.25	80	79	68	1.93	1.4	74	0.015	97	97	71.2	0.13	0.52	15.52	123.27	184.79	181.43	61.12	184.39	208	71	72	68		1.001	4.373	540
357	57.284	57.531		0.16	0.16	1.33	1.08	0.25	80	79	68	1.93	1.4	74	0.014	101	101	71.3	-0.08	0.54	15.41	123.08	184.66	181.25	61.12	184.20	203	71	71	68		1.001	4.539	559
358	57.444	57.694		0.16	0.16	1.33	1.08	0.25	80	79	68	1.93	1.4	74	0.014	100	101	71.4	-0.09	0.53	15.44	122.92	184.59	181.12	61.16	184.08	199	71	71	68		1.001	4.374	538
359	57.605	57.856		0.16	0.16	1.34	1.08	0.25	80	79	68	1.93	1.4	74	0.015	97	97	71.1	0.24	0.53	15.45	122.85	184.37	180.68	61.13	183.97	196	71	71	68		1.001	4.376	538
360	57.765	58.018		0.16	0.16	1.34	1.08	0.25	80	79	68	1.94	1.4	74	0.014	100	101	71.2	-0.09	0.53	15.47	122.60	184.12	180.29	61.20	183.80	192	71	71	68		1.001	4.402	540
361	57.926	58.180		0.16	0.16	1.34	1.08	0.25	80	79	68	1.93	1.4	74	0.013	105	104	71.3	-0.07	0.52	15.41	122.31	183.91	179.92	61.18	183.49	189	71	71	68		1.001	4.301	527
362	58.086	58.344		0.16	0.16	1.34	1.08	0.25	80	79	68	1.94	1.4	74	0.014	100	102	71.3	-0.05	0.56	15.49	122.44	183.87	179.73	61.08	183.51	185	71	71	68		1.001	4.702	576
363	58.247	58.506		0.16	0.16	1.34	1.07	0.25	80	79	68	1.93	1.4	74	0.016	94	94	71.3	0.08	0.54	15.46	122.04	183.56	179.24	61.01	183.06	182	71	71	68		1.001	4.539	555
364	58.407	58.668		0.16	0.16	1.34	1.08	0.25	80	79	68	1.93	1.4	73	0.014	100	101	71.3	-0.07	0.54	15.51	121.93	183.48	179.05	61.06	182.98	179	70	71	68		1.001	4.536	554
365	58.568	58.831		0.16	0.16	1.34	1.08	0.25	80	80	68	1.93	1.4	74	0.015	97	98	71.3	0.03	0.51	15.56	121.82	183.38	178.79	61.07	182.89	175	70	71	68		1.001	4.214	514
366	58.728	58.993		0.16	0.16	1.34	1.08	0.25	80	80	68	1.92	1.4	75	0.014	100	101	71.4	-0.07	0.53	15.48	121.44	183.02	178.23	61.13	182.57	172	70	71	68		1.001	4.379	532
367	58.889	59.156		0.16	0.16	1.34	1.08	0.25	80	80	68	1.94	1.4	73	0.014	101	101	71.3	0.12	0.52	15.52	121.23	182.96	178.03	61.14	182.37	170	70	70	68		1.001	4.373	531
368	59.050	59.318		0.16	0.16	1.34	1.08	0.25	80	80	68	1.93	1.4	73	0.014	101	100	71.3	-0.04	0.53	15.48	120.92	182.77	177.70	61.22	182.14	167	70	70	68		1.001	4.375	530
369	59.210	59.480		0.16	0.16	1.34	1.08	0.25	80	80	68	1.93	1.4	73	0.015	97	97	71.4	-0.09	0.53	15.52	120.77	182.54	177.26	61.12	181.89	165	70	70	68		1.001	4.385	530
370	59.371	59.643		0.16	0.16	1.34	1.08	0.25	80	80	68	1.93	1.4	73	0.015	97	98	71.3	0.08	0.53	15.46	120.58	182.26	176.83	60.93	181.51	162	70	70	68		1.001	4.380	529
371	59.532	59.806		0.16	0.16	1.33	1.08	0.25	80	80	67	1.93	1.4	72	0.014	101	101	71.4	-0.07	0.59	15.47	119.99	181.97	176.50	61.19	181.18	159	70	70	67		1.001	4.875	586
372	59.693	59.968		0.16	0.16	1.34	1.08	0.25	80	80	67	1.93	1.4	72	0.015	97	97	71.3	0.11	0.53	15.45	119.71	181.67	176.11	61.15	180.86	157	70	70	67		1.001	4.389	526
373	59.854	60.131		0.16	0.16	1.34	1.08	0.25	80	80	67	1.92	1.4	72	0.015	97	97	71.4	-0.09	0.53	15.43	119.27	181.44	175.78	61.29	180.56	154	70	70	67		1.001	4.378	523
374	60.014	60.293		0.16	0.16	1.34	1.08	0.25	80	80	67	1.93	1.4	71	0.016	93	94	71.3	0.05	0.53	15.44	117.71	181.24	175.52	62.58	180.28	152	70	70	67		1.001	4.382	516
375	60.175	60.456		0.16	0.16	1.34	1.08	0.25	80	80	67	1.94	1.4	71	0.016	94	94	71.2	0.07	0.55	15.53	116.95	180.93	175.25	63.08	180.03	150	69	70	67		1.001	4.541	532
376	60.335	60.619		0.16	0.16	1.34	1.08	0.25	80	80	67	1.94	1.4	71	0.015	97	97	71.5	-0.23	0.51	15.49	117.82	180.80	175.24	62.02	179.85	148	69	70	67		1.001	4.220	498
377	60.496	60.781		0.16	0.16	1.34	1.08	0.25	80	80	67	1.94	1.4	71	0.017	91	91	71.3	0.23	0.53	15.55	118.25	180.65	175.19	61.52	179.77	146	69	69	67		1.001	4.386	519
378	60.657	60.943		0.16	0.16	1.33	1.08	0.25	80	80	67	1.93	1.4	71	0.014	101	100	71.4	-0.14	0.55	15.53	118.43	180.43	175.04	61.18	179.61	144	69	69	67		1.001	4.545	539
379	60.817	61.106		0.16	0.16	1.33	1.09	0.25	80	80	66	1.93	1.4	70	0.014	100	101	71.2	0.23	0.58	15.47	118.71	180.25	174.97	60.81	179.51	142	69	69	66		1.001	4.867	578
380	60.978	61.269		0.16	0.16	1.33	1.08	0.25	80	80	67	1.92	1.4	70	0.013	104	104	71.4	-0.26	0.55	15.51	118.93	180.10	174.85	60.41	179.34	140	69	69	67		1.001	4.575	545
381	61.138	61.432		0.16	0.16	1.33	1.08	0.25	80	79	67	1.95	1.4	73	0.015	97	98	71.3	0.16	0.51	15.53	118.88	179.83	174.51	60.24	179.12	163	69	69	67		1.001	4.221	502
382	61.299	61.593		0.16	0.16	1.33	1.08	0.25	80	79	66	1.94	1.4	83	0.014	102	101	71.0	0.26	0.56	15.48	118.52	179.37	174.22	60.25	178.77	188	70	70	66		1.001	4.632	550
383	61.459	61.756		0.16	0.16	1.34	1.09	0.25	80	79	67	1.93	1.4	75	0.015	97	98	70.9	0.10	0.53	15.56	118.61	179.01	173.85	59.77	178.38	174	68	69	67		1.001	4.391	521
384	61.620	61.919		0.16	0.16	1.34	1.09	0.25	80	79	67	1.94	1.4	71	0.014	101	101	70.9	0.03	0.53	15.57	118.14	178.86	173.56	59.91	178.06	162	68	69	67		1.001	4.391	519
385	61.781	62.081		0.16	0.16	1.34	1.08	0.25	80	79	66	1.92	1.4	70	0.016	94	94	70.9	-0.03	0.55	15.43	117.98	178.76	173.45	59.95	177.94	154	68	69	66		1.001	4.557	538
386	61.942	62.244		0.16	0.16	1.34	1.08	0.25	80	79	67	1.93	1.4	70	0.015	97	97	71.0	-0.07	0.57	15.44	117.71	178.55	173.30	60.08	177.79	149	68	69	67		1.001	4.717	556
387	62.102	62.406		0.16	0.16	1.34	1.08	0.25	80	79	67	1.93	1.4	70	0.014	100	100	70.9	0.04	0.55	15.50	117.54	178.40	173.04	60.07	177.61	145	68	69	67		1.001	4.558	536
388	62.263	62.569		0.16	0.16	1.34	1.09	0.25	80	79	66	1.92	1.4	70	0.014	100	101	70.9	0.08	0.56	15.51	116.81	178.16	172.75	60.53	177.34	142	68	68	66		1.001	4.704	550
389	62.424	62.733		0.16	0.16	1.35	1.08	0.25	80	79	66	1.93	1.4	70	0.017	91	92	71.0	-0.12	0.53	15.57	116.64	177.97	172.56	60.46	177.10	139	68	68	66		1.001	4.382	512
390	62.585	62.895		0.16	0.16	1.34	1.08	0.25	80	79	66	1.94	1.4	71	0.013	104	104	71.1	-0.11	0.55	15.52	116.19	177.70	172.34	60.71	176.90	137	68	68	66		1.001	4.547	529
391	62.746	63.057		0.16	0.16	1.34	1.08	0.25	80	79	68	1.94	1.4	73	0.014	101	101	70.8	0.28	0.57	15.44	116.39	177.56	172.22	60.41	176.80	135	68	68	68		1.001	4.708	549
392	62.906	63.220		0.16	0.16	1.34	1.09	0.25	80	79	67	1.93	1.4	71	0.014	100	101	70.9	-0.14	0.53	15.53	115.66	177.32	171.87	60.77	176.43	133	68	68	67		1.001	4.381	507
393	63.067	63.383		0.16	0.16	1.34	1.08	0.25	80	79	67	1.93	1.4	70	0.016	94	94	70.9	0.05	0.57	15.48	114.96	177.00	171.63	61.25	176.22	131	68	68	67		1.001	4.710	542
394	63.228	63.547		0.16	0.16	1.34	1.08	0.25	80	79	67	1.93	1.4	70	0.014	100	101	70.9	-0.01	0.55	15.56	114.91	176.83	171.57	61.04	175.95	130	68	68	67		1.001	4.543	523
395	63.389	63.709		0.16	0.16	1.34	1.08	0.25	80	79	67	1.93	1.4	70	0.011	113	113	71.0	-0.09	0.53	15.52	115.10	176.62	171.41	60.77	175.87	128	68	68	67		1.001	4.389	506
396	63.550	63.871		0.16	0.16	1.34	1.09	0.25	80	79	67	1.93	1.4	70	0.014	100	100	70.9	0.09	0.57	15.51	115.36	176.38	171.12	60.26	175.62	126	68	68	67		1.001	4.747	548
397	63.711	64.034		0.16	0.16	1.34	1.09	0.25	80	79	66	1.92	1.4	70	0.015	97	97	70.9	0.00	0.57	15.49	114.86	176.14	170.83	60.47	175.33	125	68	68	66		1.001	4.715	542
398	63.872	64.197		0.16	0.16	1.34	1.09	0.25	80	79	67	1.92	1.4	70	0.013	104	105	71.0	-0.06	0.53	15.53	114.61	175.92	170.66	60.41	175.03	124	68	68	67		1.001	4.388	504
399	64.033	64.360		0.16	0.16	1.34	1.09	0.25	80	79	66	1.93	1.4	70	0.014	100	101	70.8	0.17	0.55	15.54	114.86	175.70	170.51	60.17	175.02	122	68	68	66		1.001	4.544	523
400	64.194	64.523		0.16	0.16	1.34	1.08	0.25	80	79	66	1.93	1.4	70	0.014	100	101	71.0	-0.22	0.55	15.49	114.63	175.52	170.43	60.09	174.72	121	68	68	66		1.001	4.547	522
401	64.355	64.686		0.16	0.16	1.34	1.09	0.25	80	79	66	1.93	1.4	69	0.014	100	101	70.9	0.09	0.53	15.42	114.32	175.29	170.17	60.14	174.46	120	67	68	66		1.001	4.384	502
402	64.516	64.849		0.16	0.16	1.33	1.08	0.25	80	79	66	1.94	1.4	69	0.016	94	94	70.9	0.03	0.53	15.53	114.16	174.96	169.84	60.14	174.30	119	67	68	66		1.001	4.388	501
403	64.677	65.012		0.16	0.16	1.34	1.09	0.25	79	79	66	1.92	1.4	69	0.014	101	101	70.8	0.08	0.55	15.51	113.92	174.78	169.67	60.20	174.12	118	67	68	66		1.001	4.549	519
404	64.838	65.175		0.16	0.16	1.34	1.09	0.25	80	79	66	1.93	1.4	69	0.014	100	101	70.8	0.03	0.55	15.46	113.56	174.52	169.38	60.26	173.82	117	67	68	66		1.001	4.547	517
405	64.999	65.337		0.16	0.16	1.34	1.09	0.25	79	79	66	1.92	1.4	69	0.013	104	104	70.9	-0.11	0.55	15.39	113.31	174.35	169.16	60.29	173.60	116	67	67	66		1.001	4.547	516
406	65.159	65.500		0.16	0.16	1.34	1.09	0.25	79	79	67	1.93	1.4	69	0.014	100	101	71.0	-0.08	0.57	15.40	113.29	174.01	168.88	59.98	173.27	115	67	67	67		1.001	4.709	534
407	65.320	65.663		0.16	0.16	1.34	1.09	0.25	79	79	66	1.93	1.4	70	0.015	97	97	70.9	0.05	0.53	15.39	113.09	173.82	168.67	59.98	173.07	114	67	67	66		1.001	4.392	497
408	65.481	65.827		0.16	0.16	1.34	1.09	0.25	79	78	66	1.93	1.4	69	0.013	104	105	71.0	-0.08	0.55	15.44	112.83	173.60	168.45	59.94	172.78	113	67	67	66		1.001	4.556	515
409	65.642	65.989		0.16	0.16	1.34	1.08	0.25	79	79	66	1.94	1.4	69	0.015	97	97	71.0	0.01	0.53	15.50	112.48	173.44	168.22	60.05	172.53	112	67	67	66		1.001	4.390	494
410	65.803	66.152		0.16	0.16	1.34	1.09	0.25	79	78	66	1.92	1.4	69	0.015	97	98	70.9	0.08	0.51	15.50	112.48	173.14	167.92	59.84	172.32	111	67	67	66		1.001	4.233	477
411	65.964	66.314		0.16	0.16	1.34	1.09	0.25	79	78	66	1.93	1.4	69	0.014	101	100	71.0	-0.09	0.55	15.45	112.33	172.91	167.77	59.83	172.15	110	67	67	66		1.001	4.559	513
412	66.125	66.477		0.16	0.16	1.33	1.09	0.25	79	78	66	1.93	1.4	69	0.015	97	98	70.9	0.12	0.53	15.47	111.94	172.72	167.59	59.97	171.91	110	67	67	66		1.001	4.399	493
413	66.285	66.641		0.16	0.16	1.33	1.08	0.25	79	78	66	1.94	1.4	75	0.016	94	96	71.0	-0.12	0.55	15.54	111.59	172.35	167.25	59.95	171.54	146	67	68	66		1.001	4.545	508
414	66.446	66.803		0.16	0.16	1.34	1.08	0.25	79	78	66	1.94	1.4	75	0.014	101	101	70.8	0.24	0.57	15.54	111.29	171.95	166.93	59.97	171.25	153	67	68	66		1.001	4.740	528

Elapsed Time	Particulate Sampling Data																	Fuel Weight, lb		Flow, gpm		Temperature Data, oF												
	Gas Meter Cubic Feet (1)	Gas Meter Cubic Feet (2)	Gas Meter Cubic Feet (amb)	Sample Rate, cfm (1)	Sample Rate, cfm (2)	Orifice dH (1)	Orifice dH (2)	Orifice dH (amb)	Meter oF (1)	Meter oF (2)	Meter oF (amb)	Meter Vac. in. Hg. (1)	Meter Vac. in. Hg. (2)	Dilution Tunnel Temp.	Dilution Tunnel dP	Pro. Rate (%) (1)	Pro. Rate (%) (2)	Scale Reading	Weight Change	Load Side Liquid Flow Rate	Boiler Side Liquid Flow Rate (optional)	Thermopile ΔT	Boiler to Heat Exch. Temp.	Heat Exch to Boiler Temp.	Inlet Load Temp.	Outlet Load Temp.	Stack	Filter (1)	Filter (2)	Ambient		Specific Heat of Inlet Water (BTU/lb-°F)	Mass Flow Rate of Inlet Water (lb/min)	Heat Output, Btu
415	66.607	66.965		0.16	0.16	1.34	1.08	0.25	79	78	66	1.93	1.4	71	0.012	109	109	70.7	0.05	0.52	15.41	111.08	171.70	166.65	59.93	171.00	138	67	67	66		1.001	4.319	480
416	66.767	67.128		0.16	0.16	1.34	1.09	0.25	79	78	66	1.92	1.4	70	0.014	100	101	70.8	-0.04	0.55	15.49	110.99	171.68	166.65	59.91	170.90	129	67	67	66		1.001	4.549	506
417	66.928	67.291		0.16	0.16	1.34	1.09	0.25	79	78	66	1.93	1.4	69	0.013	104	105	70.8	-0.02	0.55	15.57	110.33	171.35	166.27	60.25	170.58	123	67	67	66		1.001	4.552	503
418	67.089	67.454		0.16	0.16	1.34	1.09	0.25	79	78	66	1.93	1.4	70	0.014	101	101	70.9	-0.14	0.51	15.55	110.11	171.15	166.03	60.25	170.36	119	67	67	66		1.001	4.228	466
419	67.250	67.617		0.16	0.16	1.34	1.08	0.25	79	78	68	1.93	1.4	72	0.013	105	105	70.8	0.11	0.57	15.49	109.80	170.98	165.98	60.40	170.20	116	67	67	68		1.001	4.713	518
420	67.410	67.779		0.16	0.16	1.34	1.08	0.25	79	78	67	1.93	1.4	70	0.015	97	97	70.8	0.01	0.59	15.53	109.56	170.70	165.67	60.37	169.93	114	67	67	67		1.001	4.876	535
421	67.571	67.942		0.16	0.16	1.34	1.09	0.25	79	78	67	1.93	1.4	70	0.015	97	98	70.7	0.07	0.51	15.38	109.10	170.42	165.43	60.50	169.59	113	67	67	67		1.001	4.223	461
422	67.732	68.105		0.16	0.16	1.35	1.09	0.25	79	78	66	1.92	1.4	70	0.014	101	101	70.6	0.11	0.49	15.52	108.92	170.19	165.19	60.51	169.43	111	67	67	66		1.001	4.065	443
423	67.893	68.268		0.16	0.16	1.34	1.08	0.25	79	78	66	1.93	1.4	70	0.013	104	105	70.7	-0.09	0.55	15.55	108.67	169.99	165.04	60.57	169.23	110	67	67	66		1.001	4.546	495
424	68.054	68.430		0.16	0.16	1.34	1.08	0.25	79	78	66	1.92	1.4	70	0.017	91	91	70.7	0.05	0.55	15.45	108.59	169.71	164.75	60.42	169.01	109	67	67	66		1.001	4.554	495
425	68.214	68.593		0.16	0.16	1.34	1.09	0.25	79	78	66	1.93	1.4	69	0.015	97	98	70.8	-0.09	0.55	15.49	108.23	169.44	164.48	60.41	168.64	108	67	67	66		1.001	4.553	493
426	68.375	68.755		0.16	0.16	1.34	1.09	0.25	79	78	66	1.92	1.4	69	0.014	101	100	70.7	0.06	0.53	15.62	107.86	169.20	164.20	60.51	168.37	107	67	67	66		1.001	4.391	474
427	68.536	68.919		0.16	0.16	1.34	1.09	0.25	79	78	66	1.92	1.4	69	0.014	101	102	70.7	-0.01	0.55	15.46	107.41	168.89	163.89	60.75	168.16	106	67	67	66		1.001	4.553	490
428	68.697	69.081		0.16	0.16	1.34	1.08	0.25	79	78	66	1.93	1.4	69	0.014	101	100	70.7	0.05	0.55	15.55	107.25	168.78	163.78	60.65	167.90	105	67	67	66		1.001	4.555	489
429	68.858	69.244		0.16	0.16	1.35	1.08	0.25	79	78	66	1.91	1.4	69	0.015	97	98	70.7	-0.02	0.55	15.50	107.32	168.46	163.49	60.39	167.70	105	67	67	66		1.001	4.558	490
430	69.019	69.406		0.16	0.16	1.35	1.09	0.25	79	78	66	1.91	1.4	69	0.014	101	100	70.7	-0.04	0.55	15.51	107.18	168.25	163.27	60.29	167.47	104	67	67	66		1.001	4.551	488
431	69.180	69.569		0.16	0.16	1.34	1.09	0.25	79	78	66	1.91	1.4	69	0.014	101	101	70.7	0.06	0.56	15.52	106.80	168.05	163.01	60.35	167.15	103	67	67	66		1.001	4.677	500
432	69.341	69.732		0.16	0.16	1.33	1.08	0.25	79	78	66	1.92	1.4	69	0.014	101	101	70.6	0.02	0.58	15.45	106.57	167.87	162.79	60.45	167.02	102	67	67	66		1.001	4.798	512
433	69.502	69.895		0.16	0.16	1.34	1.08	0.25	79	78	66	1.92	1.4	69	0.014	101	101	70.8	-0.19	0.54	15.50	106.03	167.53	162.55	60.63	166.66	101	67	67	66		1.001	4.487	476
434	69.662	70.057		0.16	0.16	1.33	1.09	0.25	79	78	66	1.93	1.4	69	0.014	100	100	70.7	0.15	0.57	15.45	105.81	167.42	162.38	60.68	166.49	101	67	67	66		1.001	4.716	500
435	69.823	70.220		0.16	0.16	1.34	1.09	0.25	79	78	66	1.93	1.4	69	0.014	101	101	70.6	0.06	0.53	15.47	105.21	167.13	162.11	61.11	166.33	101	67	67	66		1.001	4.440	468
436	69.984	70.383		0.16	0.16	1.34	1.08	0.25	79	78	66	1.92	1.4	69	0.014	101	101	70.7	-0.04	0.53	15.49	105.11	166.83	161.92	61.00	166.11	100	67	67	66		1.001	4.392	462
437	70.145	70.546		0.16	0.16	1.34	1.08	0.25	79	78	66	1.93	1.4	69	0.013	104	105	70.7	-0.08	0.53	15.56	105.01	166.64	161.73	60.88	165.89	99	67	67	66		1.001	4.387	461
438	70.305	70.708		0.16	0.16	1.34	1.09	0.25	79	78	66	1.92	1.4	69	0.014	100	100	70.8	-0.09	0.49	15.53	105.08	166.36	161.54	60.54	165.62	98	67	67	66		1.001	4.065	428
439	70.466	70.871		0.16	0.16	1.33	1.09	0.25	79	78	66	1.93	1.4	69	0.013	104	105	70.7	0.08	0.55	15.45	104.98	166.21	161.31	60.44	165.42	98	67	67	66		1.001	4.547	478
440	70.627	71.034		0.16	0.16	1.33	1.09	0.25	79	78	66	1.91	1.4	69	0.015	97	98	70.7	-0.01	0.57	15.53	104.39	165.87	160.99	60.73	165.12	98	67	67	66		1.001	4.712	492
441	70.788	71.197		0.16	0.16	1.33	1.08	0.25	79	78	66	1.91	1.4	70	0.015	97	98	70.7	0.04	0.51	15.51	103.89	165.73	160.78	60.98	164.88	98	67	67	66		1.001	4.226	440
442	70.948	71.360		0.16	0.16	1.34	1.08	0.25	79	78	67	1.92	1.4	72	0.013	104	105	70.8	-0.09	0.55	15.49	103.43	165.41	160.46	61.11	164.54	97	67	67	67		1.001	4.550	471
443	71.109	71.522		0.16	0.16	1.34	1.08	0.25	79	78	67	1.93	1.4	70	0.016	94	94	70.7	0.12	0.51	15.48	102.98	165.24	160.30	61.40	164.38	96	67	67	67		1.001	4.222	435
444	71.269	71.684		0.16	0.16	1.34	1.08	0.25	79	78	67	1.91	1.4	70	0.012	108	108	70.7	-0.04	0.49	15.45	102.97	164.99	160.06	61.11	164.08	126	67	67	67		1.001	4.064	419
445	71.430	71.847		0.16	0.16	1.34	1.08	0.25	79	78	66	1.94	1.4	75	0.015	98	98	70.6	0.14	0.53	15.57	102.45	164.74	159.77	61.45	163.90	141	67	68	66		1.001	4.393	451
446	71.591	72.010		0.16	0.16	1.34	1.08	0.25	79	78	66	1.92	1.4	72	0.014	101	101	70.5	0.02	0.59	15.42	101.97	164.43	159.52	61.65	163.62	134	67	67	66		1.001	4.878	498
447	71.752	72.172		0.16	0.16	1.34	1.08	0.25	79	78	66	1.94	1.4	70	0.015	97	97	70.5	0.00	0.57	15.49	102.53	164.24	159.37	60.90	163.43	123	67	67	66		1.001	4.715	484
448	71.912	72.334		0.16	0.16	1.34	1.09	0.25	79	78	66	1.92	1.4	69	0.014	100	100	70.5	0.05	0.52	15.54	102.17	163.91	159.01	60.93	163.10	117	67	67	66		1.001	4.328	443
449	72.073	72.497		0.16	0.16	1.34	1.08	0.25	79	78	66	1.93	1.4	69	0.012	109	109	70.5	0.00	0.51	15.44	102.44	163.70	158.88	60.42	162.87	112	67	67	66		1.001	4.232	434
450	72.233	72.661		0.16	0.16	1.34	1.09	0.25	79	78	66	1.93	1.4	69	0.014	100	102	70.7	-0.22	0.51	15.45	102.44	163.54	158.73	60.22	162.66	109	67	67	66		1.001	4.229	434
451	72.394	72.823		0.16	0.16	1.35	1.09	0.25	79	78	66	1.92	1.4	69	0.014	101	100	70.6	0.06	0.55	15.52	102.64	163.34	158.64	59.92	162.56	106	67	67	66		1.001	4.555	468
452	72.555	72.985		0.16	0.16	1.34	1.08	0.25	79	78	66	1.91	1.4	69	0.014	101	100	70.5	0.11	0.53	15.45	102.22	163.08	158.33	60.06	162.28	105	67	67	66		1.001	4.391	449
453	72.716	73.148		0.16	0.16	1.34	1.09	0.25	79	78	66	1.92	1.4	68	0.015	97	97	70.6	-0.04	0.59	15.57	101.98	162.80	158.07	60.00	161.97	103	67	67	66		1.001	4.880	498
454	72.877	73.311		0.16	0.16	1.34	1.09	0.25	79	78	66	1.92	1.4	68	0.013	104	105	70.8	-0.18	0.55	15.47	101.90	162.60	157.95	59.90	161.80	102	67	67	66		1.001	4.552	464
455	73.037	73.474		0.16	0.16	1.34	1.09	0.25	79	78	66	1.91	1.4	69	0.015	97	98	70.6	0.17	0.55	15.48	101.44	162.38	157.71	60.13	161.57	100	67	67	66		1.001	4.557	463
456	73.198	73.637		0.16	0.16	1.34	1.08	0.25	79	78	65	1.93	1.4	68	0.014	100	101	70.4	0.17	0.57	15.57	101.51	162.02	157.41	59.83	161.34	100	67	67	65		1.001	4.719	480
457	73.359	73.799		0.16	0.16	1.35	1.08	0.25	79	78	65	1.92	1.4	73	0.014	101	101	70.5	-0.13	0.55	15.50	101.31	161.81	157.10	59.74	161.06	136	67	67	65		1.001	4.555	462
458	73.520	73.962		0.16	0.16	1.34	1.08	0.25	79	78	66	1.92	1.4	75	0.015	98	98	70.5	0.08	0.57	15.53	100.86	161.61	156.99	59.96	160.83	152	67	67	66		1.001	4.719	477
459	73.681	74.125		0.16	0.16	1.34	1.09	0.25	79	78	66	1.93	1.4	75	0.015	98	98	70.5	-0.02	0.53	15.50	100.52	161.36	156.71	60.03	160.55	156	67	67	66		1.001	4.391	442
460	73.842	74.287		0.16	0.16	1.34	1.09	0.25	79	78	65	1.93	1.4	75	0.014	101	101	70.3	0.21	0.55	15.51	100.64	161.17	156.58	59.83	160.47	159	67	67	65		1.001	4.551	459
461	74.003	74.449		0.16	0.16	1.34	1.08	0.25	79	78	66	1.93	1.4	76	0.015	98	98	70.4	-0.14	0.53	15.50	100.28	160.97	156.41	59.97	160.25	161	67	67	66		1.001	4.391	441
462	74.163	74.612		0.16	0.16	1.34	1.09	0.25	79	78	66	1.93	1.4	76	0.013	104	105	70.3	0.07	0.55	15.52	100.07	160.74	156.25	59.99	160.07	162	67	67	66		1.001	4.553	456
463	74.324	74.775		0.16	0.16	1.34	1.09	0.25	79	78	66	1.92	1.4	76	0.015	98	98	70.3	0.02	0.55	15.51	99.78	160.47	155.95	60.02	159.80	162	67	67	66		1.001	4.557	455
464	74.485	74.938		0.16	0.16	1.34	1.08	0.25	78	78	66	1.93	1.4	77	0.016	95	95	70.3	0.03	0.53	15.45	99.62	160.25	155.79	59.99	159.61	163	67	67	66		1.001	4.395	438
465	74.645	75.100		0.16	0.16	1.34	1.08	0.25	78	78	66	1.92	1.4	77	0.014	101	101	70.2	0.09	0.53	15.52	99.48	160.07	155.63	59.91	159.38	163	67	68	66		1.001	4.381	436
466	74.806	75.263		0.16	0.16	1.34	1.08	0.25	78	78	66	1.93	1.4	78	0.015	98	98	70.2	-0.03	0.53	15.49	99.10	159.80	155.34	60.04	159.14	163	68	68	66		1.001	4.441	441
467	74.967	75.425		0.16	0.16	1.33	1.09	0.25	78	78	66	1.94	1.4	78	0.014	102	101	70.2	0.05	0.51	15.49	99.02	159.49	155.10	59.84	158.86	164	68	68	66		1.001	4.284	425
468	75.127	75.588		0.16	0.16	1.33	1.09	0.25	78	78	66	1.93	1.4	78	0.014	101	102	70.3	-0.12	0.47	15.51	98.67	159.29	154.88	59.92	158.59	164	68	68	66		1.001	3.909	386
469	75.288	75.751		0.16	0.16	1.33	1.08	0.25	79	78	66	1.92	1.4	78	0.017	92	92	70.2	0.10	0.55	15.63	98.23	159.04	154.62	60.11	158.34	164	68	68	66		1.001	4.547	447
470	75.449	75.913		0.16	0.16	1.34	1.09	0.25	79	78	66	1.92	1.4	78	0.015	98	98	70.1	0.07	0.57	15.41	97.75	158.73	154.28	60.35	158.10	166	68	68	66		1.001	4.714	461
471	75.609	76.075		0.16	0.16	1.34	1.09	0.25	79	78	66	1.92	1.4	79	0.016	94	95	69.9	0.23	0.53	15.37	97.49	158.61	154.16	60.41	157.90	168	68	68	66		1.001	4.391	429
472	75.770	76.238		0.16	0.16	1.33	1.08	0.25	79	78	66	1.94	1.4	79	0.015	98	98	69.7	0.23	0.58	15.59	97.21	158.59	154.06	60.54	157.75	170	68	68	66		1.001	4.872	474
473	75.930	76.401		0.16	0.16	1.34	1.08	0.25	79	78	67	1.95	1.4	80	0.014	101	102	69.4	0.28	0.93	15.47	97.58	158.18	151.40	59.93	157.52	172	68	68	67		1.001	7.787	761
474	76.091	76.563		0.16	0.16	1.34	1.08	0.25	79	78	66	1.93	1.4	80	0.014	102	101	69.2	0.17	0.95	15.53	97.45	157.32	152.15	59.79	157.24	174	68	69	66		1.001	7.947	775
475	76.251	76.725		0.16	0.16	1.34	1.08	0.25	79	78	66	1.95	1.4	81	0.015	98	98	69.1	0.14	0.95	15.47	97.25	156.96	151.85	59.56	156.82	179	69	69	66		1.001	7.940	773

Elapsed Time	Particulate Sampling Data																	Fuel Weight, lb		Flow, gpm		Temperature Data, oF												
	Gas Meter Cubic Feet (1)	Gas Meter Cubic Feet (2)	Gas Meter Cubic Feet (amb)	Sample Rate, cfm (1)	Sample Rate, cfm (2)	Orifice dH (1)	Orifice dH (2)	Orifice dH (amb)	Meter oF (1)	Meter oF (2)	Meter oF (amb)	Meter Vac. In. Hg. (1)	Meter Vac. In. Hg. (2)	Dilution Tunnel Temp.	Dilution Tunnel dP	Pro. Rate (%) (1)	Pro. Rate (%) (2)	Scale Reading	Weight Change	Load Side Liquid Flow Rate	Boiler Side Liquid Flow Rate (optional)	Thermopile ΔT	Boiler to Heat Exch. Temp.	Heat Exch to Boiler Temp.	Inlet Load Temp.	Outlet Load Temp.	Stack	Filter (1)	Filter (2)	Ambient		Specific Heat of Inlet Water (BTU/lb-°F)	Mass Flow Rate of Inlet Water (lb/min)	Heat Output, Btu
476	76.412	76.887		0.16	0.16	1.34	1.08	0.25	79	78	66	1.95	1.4	81	0.015	98	98	68.8	0.26	0.97	15.40	97.31	156.70	151.63	59.26	156.57	185	69	69	66		1.001	8.114	791
477	76.572	77.050		0.16	0.16	1.34	1.08	0.25	79	78	66	1.95	1.4	82	0.014	101	102	68.4	0.38	0.95	15.57	97.12	156.41	151.43	59.16	156.28	196	69	69	66		1.001	7.947	773
478	76.732	77.212		0.16	0.16	1.34	1.07	0.25	78	78	66	1.96	1.4	86	0.014	102	102	68.1	0.32	0.97	15.48	96.86	156.09	151.10	59.08	155.94	217	69	69	66		1.001	8.117	787
479	76.893	77.373		0.16	0.16	1.34	1.08	0.25	79	78	66	1.94	1.4	89	0.015	99	98	67.6	0.51	0.95	15.64	96.76	156.05	151.06	59.01	155.77	240	70	70	66		1.001	7.954	771
480	77.052	77.535		0.16	0.16	1.34	1.08	0.25	79	78	66	1.96	1.5	91	0.014	101	102	67.3	0.32	0.99	15.44	96.75	155.92	150.91	58.91	155.66	258	70	70	66		1.001	8.268	801
481	77.213	77.697		0.16	0.16	1.34	1.08	0.25	79	78	66	1.96	1.5	94	0.015	99	99	66.8	0.47	0.97	15.44	96.82	155.85	150.83	58.76	155.58	273	70	70	66		1.001	8.104	786
482	77.373	77.859		0.16	0.16	1.34	1.07	0.25	79	78	66	1.95	1.5	95	0.015	99	99	66.4	0.43	0.95	15.47	97.51	156.40	151.43	58.58	156.10	284	71	70	66		1.001	7.912	773
483	77.533	78.020		0.16	0.16	1.33	1.07	0.25	79	78	66	1.96	1.5	96	0.013	106	106	66.0	0.37	0.99	15.52	98.07	156.82	151.84	58.45	156.52	291	71	71	66		1.001	8.221	807
484	77.693	78.181		0.16	0.16	1.33	1.08	0.25	79	78	66	1.96	1.5	98	0.015	99	99	65.5	0.53	0.97	15.49	98.72	157.16	152.14	58.14	156.86	300	71	71	66		1.001	8.047	795
485	77.853	78.344		0.16	0.16	1.34	1.08	0.25	79	78	66	1.96	1.5	100	0.013	107	108	65.0	0.44	0.93	15.51	99.33	157.86	152.65	58.12	157.46	312	71	71	66		1.001	7.785	774
486	78.013	78.505		0.16	0.16	1.34	1.07	0.25	79	78	66	1.96	1.5	101	0.015	99	99	64.5	0.51	0.92	15.47	100.27	158.53	153.33	57.88	158.15	320	72	72	66		1.001	7.629	766
487	78.173	78.666		0.16	0.16	1.33	1.08	0.25	79	78	67	1.95	1.5	103	0.016	96	96	64.2	0.29	0.90	15.44	101.07	159.35	154.10	57.87	158.94	328	72	72	67		1.001	7.462	755
488	78.332	78.827		0.16	0.16	1.34	1.08	0.25	79	78	66	1.97	1.5	104	0.015	99	99	63.6	0.59	0.97	15.50	102.00	160.25	154.96	57.79	159.79	335	72	72	66		1.001	8.114	829
489	78.492	78.989		0.16	0.16	1.33	1.07	0.25	79	78	67	1.95	1.5	105	0.013	107	108	63.3	0.37	0.95	15.51	103.10	161.41	156.03	57.78	160.88	342	73	73	67		1.001	7.950	821
490	78.652	79.150		0.16	0.16	1.33	1.08	0.25	79	78	67	1.96	1.5	106	0.014	103	103	62.7	0.54	0.92	15.50	104.29	162.43	157.12	57.73	162.02	347	73	73	67		1.001	7.626	796
491	78.811	79.311		0.16	0.16	1.34	1.08	0.25	79	78	67	1.97	1.5	107	0.013	107	107	62.2	0.55	0.99	15.53	105.39	163.68	158.23	57.78	163.17	352	73	73	67		1.001	8.273	873
492	78.971	79.473		0.16	0.16	1.34	1.08	0.25	79	78	67	1.96	1.5	109	0.014	104	104	61.7	0.53	0.72	15.51	106.41	164.74	160.27	57.77	164.18	356	74	74	67		1.001	6.004	640
493	79.131	79.634		0.16	0.16	1.33	1.07	0.25	79	78	67	1.97	1.5	109	0.014	104	103	61.1	0.52	0.76	15.57	107.99	166.23	162.12	57.70	165.69	362	74	74	67		1.001	6.325	684
494	79.290	79.794		0.16	0.16	1.34	1.07	0.25	79	78	67	1.97	1.5	111	0.014	103	103	60.5	0.62	0.76	15.45	109.27	167.73	163.56	57.81	167.08	369	74	74	67		1.001	6.320	691
495	79.451	79.955		0.16	0.16	1.34	1.07	0.25	79	78	67	1.98	1.5	112	0.014	105	104	59.9	0.62	0.74	15.48	110.46	169.11	164.83	57.93	168.38	374	75	75	67		1.001	6.165	682
496	79.611	80.116		0.16	0.16	1.33	1.07	0.25	79	78	67	1.97	1.5	113	0.014	104	104	59.4	0.54	0.72	15.46	111.67	170.27	166.07	58.02	169.70	378	75	75	67		1.001	6.000	671
497	79.770	80.276		0.16	0.16	1.33	1.07	0.25	79	78	67	1.97	1.5	113	0.014	103	103	59.1	0.26	0.45	15.55	112.88	171.49	167.43	58.08	170.95	381	75	75	67		1.001	3.737	422
498	79.929	80.437		0.16	0.16	1.33	1.07	0.25	79	78	67	1.98	1.5	114	0.015	100	100	58.2	0.94	0.43	15.54	113.84	173.21	170.66	58.14	171.97	383	76	76	67		1.001	3.572	407
499	80.088	80.598		0.16	0.16	1.32	1.07	0.25	79	78	67	1.98	1.5	114	0.015	100	100	57.7	0.48	0.45	15.49	115.22	174.75	172.16	58.28	173.50	384	76	76	67		1.001	3.729	430
500	80.247	80.758		0.16	0.16	1.33	1.06	0.25	79	78	67	1.97	1.5	115	0.012	112	112	57.1	0.55	0.43	15.46	116.55	176.16	173.45	58.42	174.97	387	76	76	67		1.001	3.578	417
501	80.407	80.918		0.16	0.16	1.32	1.06	0.25	79	78	67	1.97	1.5	115	0.015	101	100	56.5	0.64	0.43	15.48	117.88	177.66	174.97	58.63	176.52	387	76	76	67		1.001	3.572	422
502	80.566	81.078		0.16	0.16	1.33	1.06	0.25	79	78	67	1.97	1.5	115	0.014	104	103	56.1	0.41	0.47	15.52	119.01	179.00	176.28	58.84	177.85	387	77	77	67		1.001	3.889	463
503	80.725	81.238		0.16	0.16	1.33	1.05	0.25	79	78	67	1.98	1.5	115	0.014	104	103	55.3	0.75	0.43	15.48	120.20	180.43	177.69	59.06	179.26	388	77	77	67		1.001	3.606	434
504	80.884	81.398		0.16	0.16	1.33	1.06	0.25	79	78	67	1.98	1.5	115	0.012	112	112	55.0	0.29	0.42	15.57	121.29	181.77	178.92	59.32	180.61	389	77	77	67		1.001	3.536	429
505	81.044	81.558		0.16	0.16	1.33	1.06	0.25	79	78	67	1.97	1.5	116	0.013	108	107	54.3	0.73	0.42	15.48	122.42	183.18	180.25	59.58	182.00	391	77	77	67		1.001	3.504	430
506	81.204	81.718		0.16	0.16	1.33	1.06	0.25	79	78	68	1.97	1.5	111	0.014	104	103	53.9	0.39	0.45	15.47	123.54	184.51	181.45	59.79	183.34	375	77	77	68		1.001	3.739	462
507	81.363	81.878		0.16	0.16	1.33	1.06	0.25	79	78	67	1.97	1.5	93	0.014	102	101	53.7	0.27	0.45	15.48	124.50	185.41	182.27	59.97	184.47	337	76	76	67		1.001	3.734	465
508	81.523	82.039		0.16	0.16	1.33	1.06	0.25	79	78	68	1.97	1.5	88	0.015	98	98	53.3	0.32	0.45	15.49	125.05	186.09	182.70	60.13	185.18	314	75	75	68		1.001	3.736	468
509	81.683	82.200		0.16	0.16	1.32	1.06	0.25	79	78	67	1.97	1.5	83	0.015	98	98	53.2	0.17	0.43	15.49	125.52	186.66	182.98	60.25	185.77	299	74	74	67		1.001	3.574	449
510	81.843	82.360		0.16	0.16	1.32	1.06	0.25	79	78	67	1.97	1.5	81	0.015	98	97	53.0	0.17	0.43	15.46	125.89	187.01	183.23	60.39	186.28	286	74	74	67		1.001	3.573	450
511	82.003	82.521		0.16	0.16	1.33	1.07	0.25	79	78	67	1.96	1.5	80	0.013	105	105	53.0	0.03	0.41	15.46	126.20	187.32	183.38	60.46	186.66	275	73	73	67		1.001	3.413	431
512	82.162	82.683		0.16	0.16	1.33	1.06	0.25	79	79	67	1.96	1.5	79	0.015	97	98	52.9	0.06	0.45	15.44	126.18	187.60	183.50	60.61	186.79	265	73	73	67		1.001	3.729	471
513	82.322	82.844		0.16	0.16	1.33	1.06	0.25	79	79	67	1.94	1.5	79	0.015	97	97	52.8	0.07	0.41	15.50	126.28	187.86	183.38	60.79	187.07	257	73	73	67		1.001	3.412	431
514	82.482	83.005		0.16	0.16	1.33	1.07	0.25	79	79	67	1.94	1.5	78	0.014	101	100	52.7	0.16	0.39	15.55	125.41	188.08	183.71	61.66	187.07	250	73	73	67		1.001	3.255	409
515	82.642	83.166		0.16	0.16	1.33	1.07	0.25	79	79	67	1.94	1.5	78	0.015	97	97	52.8	-0.07	0.39	15.50	122.82	188.20	183.88	64.33	187.15	243	72	73	67		1.001	3.254	400
516	82.802	83.329		0.16	0.16	1.33	1.07	0.25	79	79	67	1.96	1.4	77	0.014	101	102	52.7	0.00	0.35	15.48	121.23	188.33	184.05	66.21	187.44	237	72	73	67		1.001	2.934	356
517	82.963	83.490		0.16	0.16	1.34	1.08	0.25	79	79	67	1.95	1.4	77	0.013	105	104	52.6	0.17	0.51	15.49	120.60	188.38	182.99	66.79	187.39	232	72	73	67		1.001	4.213	509
518	83.123	83.652		0.16	0.16	1.34	1.08	0.25	79	79	67	1.94	1.4	76	0.014	101	101	52.6	-0.02	0.47	15.47	120.71	188.33	182.91	66.66	187.37	228	72	72	67		1.001	3.896	471
519	83.283	83.814		0.16	0.16	1.33	1.08	0.25	79	79	67	1.95	1.4	75	0.016	94	94	52.6	0.01	0.49	15.55	120.64	188.30	182.93	66.79	187.42	227	72	72	67		1.001	4.058	490
520	83.444	83.977		0.16	0.16	1.34	1.08	0.25	79	79	67	1.95	1.4	74	0.014	101	101	52.6	0.00	0.45	15.50	120.69	188.35	183.19	66.73	187.42	224	72	72	67		1.001	3.734	451
521	83.604	84.138		0.16	0.16	1.33	1.07	0.25	79	79	67	1.94	1.4	74	0.015	97	97	52.5	0.08	0.49	15.48	120.50	188.26	182.81	66.68	187.18	219	71	72	67		1.001	4.053	489
522	83.765	84.300		0.16	0.16	1.33	1.08	0.25	79	79	67	1.95	1.4	74	0.015	98	97	52.5	0.04	0.45	15.41	120.46	188.15	182.68	66.57	187.03	215	71	72	67		1.001	3.742	451
523	83.925	84.462		0.16	0.16	1.33	1.08	0.25	79	79	67	1.94	1.4	74	0.015	97	97	52.4	0.05	0.66	15.40	120.42	188.12	182.68	66.60	187.02	211	71	71	67		1.001	5.505	664
524	84.085	84.625		0.16	0.16	1.33	1.08	0.25	79	79	67	1.93	1.4	74	0.015	97	98	52.5	-0.05	0.68	15.42	122.64	187.73	180.97	64.31	186.95	207	71	71	67		1.001	5.671	696
525	84.245	84.787		0.16	0.16	1.32	1.07	0.25	79	79	68	1.95	1.4	73	0.016	94	94	52.4	0.11	0.68	15.43	124.58	187.45	180.78	62.12	186.70	202	71	71	68		1.001	5.671	707
526	84.406	84.949		0.16	0.16	1.32	1.08	0.25	79	79	68	1.95	1.4	73	0.013	105	104	52.6	-0.24	0.56	15.56	124.75	187.26	181.62	61.80	186.55	199	71	71	68		1.001	4.702	587
527	84.566	85.111		0.16	0.16	1.33	1.08	0.25	79	79	68	1.94	1.4	73	0.013	104	104	52.4	0.18	0.56	15.48	124.59	187.17	181.59	61.76	186.35	195	71	71	68		1.001	4.703	587
528	84.726	85.274		0.16	0.16	1.33	1.07	0.25	79	79	67	1.95	1.4	73	0.016	94	95	52.6	-0.14	0.56	15.59	124.37	187.11	181.49	61.83	186.20	191	71	71	67		1.001	4.704	586
529	84.886	85.436		0.16	0.16	1.33	1.07	0.25	80	79	68	1.94	1.4	73	0.014	100	101	52.5	0.09	0.55	15.50	124.05	186.99	181.23	62.08	186.14	187	70	71	68		1.001	4.543	564
530	85.046	85.598		0.16	0.16	1.33	1.08	0.25	79	79	68	1.94	1.4	73	0.014	100	101	52.5	0.00	0.57	15.53	123.74	186.82	181.08	62.24	185.98	184	70	71	68		1.001	4.706	583
531	85.207	85.760		0.16	0.16	1.33	1.08	0.25	80	79	67	1.93	1.4	73	0.014	101	101	52.5	-0.05	0.52	15.47	123.42	186.64	180.79	62.32	185.74	181	70	70	67		1.001	4.373	540
532	85.367	85.922		0.16	0.16	1.33	1.08	0.25	80	79	68	1.94	1.4	73	0.015	97	97	52.5	0.00	0.54	15.57	122.97	186.57	180.81	62.68	185.65	178	70	70	68		1.001	4.536	558
533	85.527	86.084		0.16	0.16	1.33	1.07	0.25	80	79	67	1.93	1.4	73	0.014	100	101	52.5	0.04	0.54	15.51	123.06	186.19	180.41	62.29	185.35	175	70	70	67		1.001	4.539	559
534	85.687	86.246		0.16	0.16	1.33	1.08	0.25	80	79	67	1.94	1.4	73	0.014	100	101	52.7	-0.21	0.54	15.54	122.79	186.06	180.37	62.38	185.17	172	70	70	67		1.001	4.536	558
535	85.848	86.408		0.16	0.16	1.33	1.08	0.25	80	79	67	1.95	1.4	73	0.015	97	97	52.5	0.22	0.54	15.50	122.47	185.85	180.06	62.36	184.83	169	70	70	67		1.001	4.537	556
536	86.008	86.571		0.16	0.16	1.33	1.08	0.25	80	79	67	1.95	1.4	73	0.013	104	105	52.4	0.05	0.56	15.53	122.53	185.63	180.06	62.25	184.79	166	70	70	67		1.001	4.700	577

Elapsed Time	Particulate Sampling Data																	Fuel Weight, lb		Flow, gpm		Temperature Data, oF												
	Gas Meter Cubic Feet (1)	Gas Meter Cubic Feet (2)	Gas Meter Cubic Feet (amb)	Sample Rate, cfm (1)	Sample Rate, cfm (2)	Orifice dH (1)	Orifice dH (2)	Orifice dH (amb)	Meter oF (1)	Meter oF (2)	Meter oF (amb)	Meter Vac. In. Hg. (1)	Meter Vac. In. Hg. (2)	Dilution Tunnel Temp.	Dilution Tunnel dP	Pro. Rate (%) (1)	Pro. Rate (%) (2)	Scale Reading	Weight Change	Load Side Liquid Flow Rate	Boiler Side Liquid Flow Rate (optional)	Thermopile ΔT	Boiler to Heat Exch. Temp.	Heat Exch to Boiler Temp.	Inlet Load Temp.	Outlet Load Temp.	Stack	Filter (1)	Filter (2)	Ambient		Specific Heat of Inlet Water (BTU/lb-°F)	Mass Flow Rate of Inlet Water (lb/min)	Heat Output, Btu
537	86.168	86.733		0.16	0.16	1.33	1.07	0.25	80	79	67	1.95	1.4	73	0.014	100	101	52.6	-0.15	0.56	15.54	122.55	185.44	179.72	62.04	184.59	164	70	70	67		1.001	4.702	577
538	86.329	86.895		0.16	0.16	1.33	1.08	0.25	80	79	67	1.93	1.4	73	0.014	101	101	52.4	0.19	0.53	15.49	122.07	185.17	179.34	62.19	184.26	161	70	70	67		1.001	4.383	536
539	86.490	87.057		0.16	0.16	1.34	1.08	0.25	80	79	68	1.93	1.4	73	0.014	101	101	52.6	-0.18	0.56	15.45	121.99	184.85	179.07	61.97	183.95	159	70	70	68		1.001	4.700	574
540	86.650	87.220		0.16	0.16	1.33	1.08	0.25	80	79	67	1.94	1.4	73	0.014	100	101	52.5	0.10	0.56	15.51	121.54	184.72	179.00	62.16	183.71	156	70	70	67		1.001	4.706	573
541	86.811	87.382		0.16	0.16	1.33	1.08	0.25	80	79	67	1.94	1.4	73	0.016	94	94	52.6	-0.11	0.53	15.40	121.57	184.37	178.69	61.98	183.54	154	70	70	67		1.001	4.395	535
542	86.971	87.544		0.16	0.16	1.33	1.08	0.25	80	79	67	1.95	1.4	73	0.014	100	101	52.5	0.02	0.53	15.44	121.13	184.24	178.60	62.24	183.37	152	70	70	67		1.001	4.402	534
543	87.131	87.706		0.16	0.16	1.33	1.08	0.25	80	79	67	1.95	1.4	73	0.016	94	94	52.5	0.02	0.55	15.52	121.08	184.00	178.31	62.04	183.12	149	70	70	67		1.001	4.558	553
544	87.292	87.868		0.16	0.16	1.32	1.08	0.25	80	79	68	1.95	1.4	73	0.014	101	101	52.5	0.02	0.55	15.46	120.71	183.79	178.03	62.20	182.92	148	69	70	68		1.001	4.542	549
545	87.452	88.032		0.16	0.16	1.33	1.08	0.25	80	79	67	1.95	1.4	72	0.014	100	102	52.6	-0.08	0.53	15.43	121.07	183.71	178.16	61.83	182.90	145	69	70	67		1.001	4.382	531
546	87.612	88.193		0.16	0.16	1.32	1.07	0.25	80	79	67	1.93	1.4	72	0.013	104	104	52.6	0.03	0.54	15.53	120.71	183.51	178.00	61.98	182.69	143	69	70	67		1.001	4.538	548
547	87.773	88.355		0.16	0.16	1.33	1.08	0.25	80	79	67	1.95	1.4	73	0.016	94	94	52.5	0.04	0.57	15.48	120.62	183.37	177.78	61.90	182.52	142	69	70	67		1.001	4.707	568
548	87.933	88.518		0.16	0.16	1.33	1.08	0.25	80	79	67	1.94	1.4	72	0.014	100	101	52.6	-0.03	0.55	15.42	120.06	183.19	177.60	62.24	182.31	148	69	69	67		1.001	4.540	546
549	88.093	88.680		0.16	0.16	1.32	1.07	0.25	80	79	67	1.94	1.5	84	0.016	95	95	52.3	0.23	0.51	15.42	120.15	182.80	177.24	62.02	182.17	186	71	71	67		1.001	4.216	507
550	88.253	88.841		0.16	0.16	1.33	1.07	0.25	80	79	67	1.94	1.4	79	0.014	101	100	52.1	0.28	0.53	15.51	119.26	182.49	176.81	62.30	181.56	181	69	70	67		1.001	4.380	523
551	88.413	89.003		0.16	0.16	1.33	1.07	0.25	80	79	67	1.94	1.4	74	0.014	100	101	52.0	0.11	0.56	15.54	118.87	182.41	176.85	62.59	181.45	168	69	69	67		1.001	4.702	560
552	88.574	89.165		0.16	0.16	1.33	1.08	0.25	80	79	67	1.93	1.4	73	0.015	97	97	52.1	-0.18	0.51	15.57	119.09	182.30	176.71	62.28	181.37	158	69	69	67		1.001	4.210	502
553	88.734	89.328		0.16	0.16	1.34	1.08	0.25	80	79	67	1.94	1.4	73	0.017	91	92	52.1	0.00	0.56	15.50	118.98	181.99	176.54	62.25	181.23	152	69	69	67		1.001	4.697	559
554	88.895	89.490		0.16	0.16	1.33	1.08	0.25	80	79	67	1.94	1.4	72	0.014	101	100	52.1	0.02	0.58	15.51	119.09	181.88	176.37	61.95	181.04	147	69	69	67		1.001	4.854	579
555	89.055	89.652		0.16	0.16	1.33	1.08	0.25	80	79	68	1.95	1.4	72	0.014	100	100	52.0	0.12	0.49	15.42	118.62	181.63	176.13	62.14	180.76	144	69	69	68		1.001	4.050	481
556	89.215	89.814		0.16	0.16	1.34	1.08	0.25	80	79	67	1.95	1.4	72	0.014	100	100	52.0	0.00	0.52	15.55	118.36	181.41	175.89	62.23	180.59	141	69	69	67		1.001	4.372	518
557	89.376	89.977		0.16	0.16	1.33	1.08	0.25	80	79	67	1.95	1.4	72	0.014	101	101	52.2	-0.20	0.51	15.44	118.37	181.25	175.83	62.07	180.44	139	69	69	67		1.001	4.210	499
558	89.537	90.140		0.16	0.16	1.33	1.08	0.25	80	79	67	1.94	1.4	72	0.014	101	101	52.2	-0.01	0.53	15.50	118.37	180.96	175.56	61.75	180.11	137	69	69	67		1.001	4.388	520
559	89.698	90.302		0.16	0.16	1.33	1.08	0.25	80	79	67	1.95	1.4	72	0.014	101	100	52.0	0.23	0.54	15.52	117.87	180.77	175.33	62.02	179.89	135	69	69	67		1.001	4.534	535
560	89.858	90.464		0.16	0.16	1.34	1.08	0.25	80	79	68	1.93	1.4	72	0.015	97	97	52.0	-0.02	0.51	15.47	117.77	180.52	175.11	61.98	179.75	133	69	69	68		1.001	4.289	506
561	90.019	90.626		0.16	0.16	1.33	1.08	0.25	80	79	68	1.93	1.4	72	0.014	101	100	52.2	-0.18	0.52	15.46	117.67	180.31	174.80	61.88	179.55	132	69	69	68		1.001	4.337	511
562	90.179	90.789		0.16	0.16	1.33	1.08	0.25	80	79	67	1.93	1.4	72	0.015	97	98	52.1	0.08	0.57	15.41	117.35	180.08	174.52	61.94	179.29	130	69	69	67		1.001	4.720	555
563	90.340	90.951		0.16	0.16	1.32	1.07	0.25	80	79	67	1.93	1.4	72	0.014	101	100	52.1	0.02	0.54	15.44	116.86	179.91	174.31	62.16	179.02	129	69	69	67		1.001	4.537	531
564	90.500	91.113		0.16	0.16	1.32	1.08	0.25	80	79	67	1.94	1.4	72	0.013	104	104	52.0	0.05	0.56	15.53	116.06	179.72	174.08	62.70	178.76	127	69	69	67		1.001	4.695	546
565	90.661	91.276		0.16	0.16	1.32	1.08	0.25	80	79	68	1.94	1.4	72	0.015	97	98	52.1	-0.05	0.56	15.51	115.07	179.49	173.81	63.51	178.58	126	69	69	68		1.001	4.700	542
566	90.821	91.438		0.16	0.16	1.32	1.08	0.25	80	79	68	1.94	1.4	72	0.014	100	100	52.2	-0.13	0.54	15.41	114.80	179.22	173.58	63.44	178.24	125	69	69	68		1.001	4.536	521
567	90.981	91.601		0.16	0.16	1.33	1.07	0.25	80	79	68	1.94	1.4	72	0.014	100	101	52.0	0.21	0.55	15.51	114.39	179.04	173.40	63.69	178.07	123	69	69	68		1.001	4.542	520
568	91.142	91.763		0.16	0.16	1.33	1.08	0.25	80	79	67	1.95	1.4	72	0.015	97	97	52.2	-0.22	0.54	15.50	113.83	178.80	173.17	64.02	177.85	122	69	69	67		1.001	4.538	517
569	91.302	91.925		0.16	0.16	1.33	1.08	0.25	80	79	67	1.92	1.4	72	0.013	104	104	52.1	0.12	0.53	15.51	113.56	178.57	172.91	63.95	177.51	121	69	69	67		1.001	4.376	498
570	91.463	92.087		0.16	0.16	1.33	1.08	0.25	80	79	67	1.94	1.4	72	0.014	101	100	52.0	0.10	0.58	15.40	113.44	178.46	172.82	64.01	177.45	120	69	69	67		1.001	4.861	552
571	91.623	92.250		0.16	0.16	1.33	1.08	0.25	80	79	68	1.95	1.4	74	0.013	104	105	52.1	-0.06	0.53	15.46	113.47	178.21	172.57	63.80	177.28	119	69	69	68		1.001	4.377	497
572	91.783	92.412		0.16	0.16	1.33	1.08	0.25	80	79	68	1.94	1.4	73	0.014	100	101	52.2	-0.18	0.54	15.47	113.24	177.92	172.34	63.78	177.01	117	69	69	68		1.001	4.538	514
573	91.944	92.574		0.16	0.16	1.33	1.08	0.25	80	79	68	1.95	1.4	72	0.014	101	100	52.2	0.05	0.56	15.51	113.21	177.77	172.21	63.57	176.78	116	69	69	68		1.001	4.695	532
574	92.104	92.736		0.16	0.16	1.33	1.08	0.25	80	79	68	1.95	1.4	72	0.014	100	100	52.0	0.20	0.53	15.49	112.85	177.45	171.89	63.78	176.62	116	69	69	68		1.001	4.376	494
575	92.265	92.900		0.16	0.16	1.34	1.08	0.25	80	79	68	1.95	1.4	72	0.015	97	98	52.2	-0.20	0.54	15.56	112.68	177.28	171.66	63.64	176.32	115	69	69	68		1.001	4.529	511
576	92.426	93.062		0.16	0.16	1.34	1.08	0.25	80	79	68	1.95	1.4	71	0.015	97	97	52.0	0.16	0.52	15.41	113.23	177.00	171.41	62.81	176.04	114	69	69	68		1.001	4.367	495
577	92.586	93.224		0.16	0.16	1.33	1.08	0.25	80	80	68	1.94	1.4	71	0.013	104	104	52.1	-0.12	0.51	15.43	112.74	176.74	171.29	63.14	175.88	113	69	69	68		1.001	4.235	478
578	92.746	93.386		0.16	0.16	1.33	1.08	0.25	80	79	68	1.94	1.4	71	0.016	93	94	52.0	0.10	0.55	15.51	113.36	176.51	171.11	62.26	175.62	112	69	69	68		1.001	4.549	516
579	92.907	93.549		0.16	0.16	1.33	1.08	0.25	80	79	68	1.94	1.4	71	0.013	104	105	52.0	0.01	0.56	15.54	113.49	176.26	170.80	61.91	175.41	111	69	69	68		1.001	4.685	532
580	93.068	93.711		0.16	0.16	1.33	1.07	0.25	80	80	68	1.96	1.4	76	0.016	94	94	52.0	0.03	0.55	15.51	113.46	175.97	170.55	61.61	175.07	144	69	69	68		1.001	4.551	517
581	93.229	93.873		0.16	0.16	1.33	1.07	0.25	80	80	67	1.95	1.4	80	0.015	98	98	51.9	0.05	0.51	15.52	113.88	175.64	170.29	61.01	174.88	167	69	70	67		1.001	4.231	482
582	93.389	94.035		0.16	0.16	1.33	1.08	0.25	80	79	67	1.93	1.4	73	0.016	94	94	51.9	0.06	0.53	15.51	113.93	175.47	170.15	60.73	174.66	148	69	69	67		1.001	4.388	501
583	93.550	94.197		0.16	0.16	1.34	1.08	0.25	80	80	67	1.93	1.4	71	0.015	97	97	51.9	0.00	0.59	15.48	113.69	175.06	169.79	60.57	174.26	136	69	69	67		1.001	4.876	555
584	93.710	94.360		0.16	0.16	1.34	1.08	0.25	80	79	67	1.93	1.4	70	0.013	104	105	51.9	0.04	0.55	15.46	113.75	174.88	169.64	60.28	174.03	129	69	69	67		1.001	4.555	519
585	93.871	94.522		0.16	0.16	1.34	1.08	0.25	80	79	67	1.93	1.4	70	0.013	104	104	51.8	0.10	0.53	15.54	114.14	174.75	169.43	59.77	173.91	124	68	69	67		1.001	4.395	502
586	94.032	94.685		0.16	0.16	1.34	1.08	0.25	80	79	67	1.94	1.4	70	0.014	100	101	51.8	-0.07	0.57	15.54	113.80	174.41	169.09	59.81	173.60	121	68	68	67		1.001	4.717	537
587	94.192	94.847		0.16	0.16	1.33	1.08	0.25	80	79	67	1.94	1.4	70	0.015	96	97	51.8	0.06	0.57	15.49	113.53	174.20	168.95	59.82	173.35	119	68	68	67		1.001	4.719	536
588	94.353	95.011		0.16	0.16	1.33	1.08	0.25	80	79	67	1.92	1.4	69	0.014	100	101	51.8	-0.06	0.53	15.51	113.42	173.87	168.71	59.71	173.14	117	68	68	67		1.001	4.392	499
589	94.513	95.173		0.16	0.16	1.33	1.08	0.25	80	79	66	1.93	1.4	69	0.014	100	100	51.8	-0.02	0.59	15.46	113.25	173.73	168.56	59.68	172.93	115	68	68	66		1.001	4.876	553
590	94.674	95.335		0.16	0.16	1.33	1.08	0.25	80	79	67	1.94	1.4	69	0.014	100	100	51.8	0.05	0.55	15.54	113.02	173.47	168.25	59.56	172.58	114	68	68	67		1.001	4.545	514
591	94.835	95.498		0.16	0.16	1.33	1.08	0.25	80	79	66	1.94	1.4	69	0.015	97	97	51.8	-0.03	0.53	15.46	112.68	173.23	168.04	59.72	172.40	113	68	68	66		1.001	4.387	495
592	94.995	95.661		0.16	0.16	1.33	1.08	0.25	80	79	66	1.93	1.4	69	0.015	96	97	51.8	0.05	0.55	15.52	112.62	173.07	167.95	59.71	172.33	112	68	68	66		1.001	4.542	512
593	95.156	95.824		0.16	0.16	1.33	1.08	0.25	80	79	66	1.93	1.4	69	0.014	100	101	52.0	-0.18	0.55	15.53	112.74	172.89	167.78	59.39	172.13	111	67	68	66		1.001	4.554	514
594	95.317	95.987		0.16	0.16	1.34	1.08	0.25	80	79	66	1.94	1.4	69	0.013	104	105	51.8	0.11	0.55	15.37	112.22	172.52	167.48	59.59	171.81	110	67	68	66		1.001	4.555	512
595	95.477	96.149		0.16	0.16	1.34	1.08	0.25	80	79	66	1.93	1.4	69	0.015	96	97	51.7	0.17	0.51	15.49	112.36	172.30	167.26	59.25	171.61	109	67	68	66		1.001	4.257	479
596	95.638	96.312		0.16	0.16	1.34	1.09	0.25	80	79	66	1.92	1.4	69	0.013	104	105	51.8	-0.12	0.54	15.52	111.65	172.01	166.85	59.59	171.24	109	67	67	66		1.001	4.513	505
597	95.798	96.475		0.16	0.16	1.33	1.09	0.25	80	79	66	1.92	1.4	69	0.015	96	97	51.7	0.08	0.55	15.47	111.30	171.81	166.65	59.77	171.07	107	67	67	66		1.001	4.549	507

Elapsed Time	Particulate Sampling Data																	Fuel Weight, lb		Flow, gpm		Temperature Data, oF										Specific Heat of Inlet Water (BTU/lb-°F)	Mass Flow Rate of Inlet Water (lb/min)	Heat Output, Btu
	Gas Meter Cubic Feet (1)	Gas Meter Cubic Feet (2)	Gas Meter Cubic Feet (amb)	Sample Rate, cfm (1)	Sample Rate, cfm (2)	Orifice dH (1)	Orifice dH (2)	Orifice dH (amb)	Meter oF (1)	Meter oF (2)	Meter oF (amb)	Meter Vac. In. Hg. (1)	Meter Vac. In. Hg. (2)	Dilution Tunnel Temp.	Dilution Tunnel dP	Pro. Rate (%) (1)	Pro. Rate (%) (2)	Scale Reading	Weight Change	Load Side Liquid Flow Rate	Boiler Side Liquid Flow Rate (optional)	Thermopile ΔT	Boiler to Heat Exch. Temp.	Heat Exch to Boiler Temp.	Inlet Load Temp.	Outlet Load Temp.	Stack	Filter (1)	Filter (2)	Ambient				
598	95.959	96.638		0.16	0.16	1.34	1.08	0.25	80	79	66	1.93	1.4	70	0.015	97	97	51.8	-0.08	0.57	15.43	111.30	171.58	166.43	59.46	170.76	106	67	67	66		1.001	4.713	525
599	96.120	96.800		0.16	0.16	1.34	1.08	0.25	80	79	66	1.93	1.4	69	0.013	104	104	51.9	-0.06	0.57	15.54	110.76	171.30	166.03	59.76	170.52	105	67	67	66		1.001	4.717	523
600	96.281	96.963		0.16	0.16	1.34	1.08	0.25	80	79	66	1.94	1.4	69	0.015	97	97	51.8	0.09	0.57	15.50	110.49	171.01	165.84	59.74	170.23	105	67	67	66		1.001	4.722	522
601	96.441	97.125		0.16	0.16	1.33	1.08	0.25	80	79	66	1.93	1.4	68	0.015	96	97	51.8	-0.05	0.59	15.54	109.84	170.85	165.62	60.15	169.99	104	67	67	66		1.001	4.881	537
602	96.602	97.289		0.16	0.16	1.34	1.09	0.25	80	79	66	1.95	1.4	69	0.015	97	98	51.6	0.19	0.53	15.58	109.40	170.52	165.40	60.29	169.69	103	67	67	66		1.001	4.393	481
603	96.763	97.451		0.16	0.16	1.34	1.08	0.25	80	79	66	1.92	1.4	69	0.015	97	97	51.8	-0.17	0.55	15.41	109.29	170.25	165.16	60.26	169.55	102	67	67	66		1.001	4.552	498
604	96.924	97.614		0.16	0.16	1.34	1.08	0.25	80	79	66	1.94	1.4	69	0.013	104	105	51.8	0.05	0.57	15.51	108.92	170.07	164.91	60.31	169.23	102	67	67	66		1.001	4.717	514
605	97.084	97.776		0.16	0.16	1.34	1.09	0.25	79	79	66	1.93	1.4	69	0.013	104	104	51.8	-0.08	0.53	15.41	108.58	169.82	164.64	60.44	169.02	101	67	67	66		1.001	4.390	477
606	97.245	97.939		0.16	0.16	1.34	1.09	0.25	79	79	66	1.93	1.4	69	0.014	101	101	51.7	0.11	0.53	15.55	108.63	169.54	164.44	60.12	168.76	101	67	67	66		1.001	4.386	477
607	97.406	98.103		0.16	0.16	1.33	1.08	0.25	79	79	66	1.94	1.4	70	0.012	109	110	51.9	-0.20	0.55	15.51	108.19	169.34	164.22	60.35	168.54	101	67	67	66		1.001	4.547	493
608	97.567	98.265		0.16	0.16	1.33	1.08	0.25	79	79	66	1.93	1.4	69	0.014	101	100	51.8	0.11	0.53	15.44	108.13	169.15	164.20	60.27	168.41	100	67	67	66		1.001	4.388	475
609	97.728	98.427		0.16	0.16	1.34	1.08	0.25	79	79	66	1.93	1.4	70	0.014	101	100	51.8	0.04	0.60	15.44	107.65	168.88	163.87	60.48	168.13	99	67	67	66		1.001	5.032	542
610	97.889	98.590		0.16	0.16	1.34	1.09	0.25	79	79	66	1.95	1.4	70	0.015	97	97	51.9	-0.08	0.57	15.44	107.32	168.68	163.65	60.59	167.91	99	67	67	66		1.001	4.707	506
611	98.049	98.753		0.16	0.16	1.33	1.08	0.25	79	79	67	1.94	1.4	71	0.015	97	98	51.8	0.11	0.51	15.36	106.99	168.33	163.35	60.64	167.63	98	67	67	67		1.001	4.222	452
612	98.210	98.916		0.16	0.16	1.33	1.08	0.25	79	78	67	1.94	1.4	75	0.016	95	95	51.8	-0.01	0.53	15.53	106.65	168.13	163.09	60.75	167.40	138	68	68	67		1.001	4.376	467
613	98.370	99.077		0.16	0.16	1.33	1.08	0.25	79	78	67	1.95	1.4	74	0.015	97	97	51.9	-0.12	0.49	15.47	106.12	167.74	162.78	60.89	167.01	140	67	67	67		1.001	4.108	436
614	98.531	99.240		0.16	0.16	1.33	1.08	0.25	79	78	67	1.95	1.4	71	0.014	101	101	51.8	0.14	0.53	15.49	106.04	167.59	162.66	60.77	166.81	128	67	67	67		1.001	4.449	472
615	98.692	99.402		0.16	0.16	1.33	1.08	0.25	79	79	66	1.94	1.4	70	0.014	101	100	51.7	0.08	0.57	15.54	105.69	167.35	162.43	60.89	166.58	120	67	67	66		1.001	4.758	504
616	98.852	99.566		0.16	0.16	1.33	1.08	0.25	79	79	66	1.92	1.4	70	0.014	100	101	51.7	-0.06	0.55	15.51	105.70	167.12	162.29	60.70	166.40	115	67	67	66		1.001	4.546	481
617	99.013	99.728		0.16	0.16	1.33	1.08	0.25	79	78	66	1.94	1.4	69	0.014	101	100	51.8	-0.04	0.59	15.51	105.87	166.93	162.07	60.33	166.20	111	67	67	66		1.001	4.881	517
618	99.173	99.890		0.16	0.16	1.33	1.08	0.25	79	78	66	1.94	1.4	69	0.016	93	94	51.8	0.02	0.53	15.55	105.95	166.73	161.82	59.98	165.94	109	67	67	66		1.001	4.396	466
619	99.334	100.053		0.16	0.16	1.33	1.08	0.25	79	78	66	1.93	1.4	69	0.016	94	94	51.8	-0.01	0.57	15.47	105.41	166.38	161.46	60.18	165.59	106	67	67	66		1.001	4.713	497
620	99.494	100.216		0.16	0.16	1.33	1.09	0.25	79	78	66	1.92	1.4	69	0.014	100	101	51.7	0.10	0.53	15.49	105.55	166.12	161.22	59.86	165.41	105	67	67	66		1.001	4.386	463
621	99.655	100.379		0.16	0.16	1.33	1.08	0.25	79	78	66	1.93	1.4	69	0.016	94	94	51.7	-0.06	0.51	15.51	105.06	165.94	161.00	60.04	165.10	103	67	67	66		1.001	4.222	444
622	99.816	100.541		0.16	0.16	1.34	1.08	0.25	79	78	66	1.92	1.4	69	0.011	113	113	51.8	-0.05	0.55	15.52	105.05	165.70	160.83	59.90	164.94	102	67	67	66		1.001	4.549	478
623	99.976	100.703		0.16	0.16	1.34	1.08	0.25	79	78	66	1.93	1.4	69	0.015	97	97	51.7	0.12	0.55	15.53	105.00	165.37	160.56	59.66	164.66	101	67	67	66		1.001	4.551	478
624	100.137	100.866		0.16	0.16	1.34	1.08	0.25	79	78	66	1.93	1.4	68	0.013	104	105	51.7	-0.04	0.55	15.46	104.84	165.15	160.29	59.64	164.48	101	67	67	66		1.001	4.551	478
625	100.297	101.030		0.16	0.16	1.34	1.08	0.25	79	78	66	1.94	1.4	68	0.014	100	101	51.6	0.05	0.53	15.45	104.52	164.91	160.06	59.66	164.17	100	67	67	66		1.001	4.391	459
626	100.458	101.192		0.16	0.16	1.34	1.08	0.25	79	78	66	1.94	1.4	69	0.015	97	97	51.7	-0.04	0.59	15.51	104.17	164.63	159.72	59.67	163.84	99	67	67	66		1.001	4.877	509
627	100.619	101.354		0.16	0.16	1.34	1.08	0.25	79	78	66	1.93	1.4	69	0.013	104	104	51.7	0.01	0.57	15.53	104.24	164.39	159.50	59.37	163.62	98	66	67	66		1.001	4.721	493
628	100.779	101.517		0.16	0.16	1.34	1.09	0.25	79	78	66	1.93	1.4	69	0.014	100	101	51.8	-0.12	0.53	15.44	103.96	164.16	159.29	59.48	163.44	98	67	67	66		1.001	4.399	458
629	100.940	101.679		0.16	0.16	1.34	1.08	0.25	79	78	66	1.93	1.4	68	0.015	97	97	51.7	0.14	0.55	15.52	103.84	163.94	159.08	59.35	163.19	97	66	67	66		1.001	4.550	473
630	101.100	101.843		0.16	0.16	1.34	1.08	0.25	79	78	66	1.92	1.4	68	0.015	96	98	51.8	-0.17	0.55	15.52	103.72	163.77	158.98	59.28	163.01	97	66	67	66		1.001	4.563	474
631	101.261	102.005		0.16	0.16	1.34	1.08	0.25	79	78	66	1.94	1.4	68	0.016	94	94	51.8	0.00	0.55	15.46	103.22	163.51	158.71	59.59	162.81	96	66	67	66		1.001	4.561	471
632	101.422	102.167		0.16	0.16	1.33	1.08	0.25	79	78	66	1.94	1.4	68	0.013	104	104	51.7	0.09	0.57	15.48	103.20	163.17	158.52	59.39	162.59	95	66	67	66		1.001	4.787	495
633	101.583	102.330		0.16	0.16	1.34	1.08	0.25	79	78	66	1.92	1.4	68	0.015	97	97	51.7	0.05	0.58	15.45	102.83	162.99	158.42	59.51	162.34	95	66	67	66		1.001	4.795	494
634	101.744	102.493		0.16	0.16	1.34	1.09	0.25	79	78	66	1.94	1.4	68	0.014	100	101	51.7	-0.05	0.53	15.50	102.53	162.79	158.16	59.58	162.11	95	66	67	66		1.001	4.393	451
635	101.904	102.656		0.16	0.16	1.34	1.08	0.25	79	78	66	1.93	1.4	69	0.016	93	94	51.7	0.04	0.53	15.44	102.11	162.50	157.91	59.77	161.88	95	66	67	66		1.001	4.393	449
636	102.065	102.818		0.16	0.16	1.34	1.08	0.25	79	78	66	1.93	1.4	69	0.014	101	100	51.6	0.06	0.58	15.44	101.67	162.31	157.64	59.86	161.53	94	66	67	66		1.001	4.871	496
637	102.225	102.980		0.16	0.16	1.34	1.08	0.25	79	78	66	1.94	1.4	70	0.014	100	100	51.7	-0.06	0.51	15.49	101.20	162.09	157.42	60.15	161.35	125	67	67	66		1.001	4.227	428
638	102.386	103.143		0.16	0.16	1.34	1.08	0.25	79	78	66	1.95	1.4	75	0.015	98	98	51.5	0.23	0.53	15.58	100.80	161.80	157.19	60.32	161.12	141	67	67	66		1.001	4.391	443
639	102.546	103.306		0.16	0.16	1.33	1.08	0.25	79	78	66	1.94	1.4	75	0.014	100	102	51.6	-0.14	0.59	15.53	100.48	161.55	156.97	60.38	160.86	151	67	67	66		1.001	4.878	491
640	102.707	103.468		0.16	0.16	1.33	1.08	0.25	79	78	66	1.94	1.4	76	0.012	109	109	51.5	0.13	0.53	15.42	100.13	161.28	156.73	60.50	160.64	155	67	67	66		1.001	4.390	440
641	102.867	103.630		0.16	0.16	1.33	1.08	0.25	79	78	66	1.94	1.4	76	0.014	101	101	51.5	-0.02	0.57	15.45	99.87	161.12	156.60	60.52	160.39	157	67	67	66		1.001	4.711	471
642	103.027	103.792		0.16	0.16	1.33	1.08	0.25	79	78	66	1.94	1.4	77	0.015	97	98	51.6	-0.07	0.57	15.57	99.50	160.90	156.37	60.69	160.19	159	67	67	66		1.001	4.714	470
643	103.188	103.955		0.16	0.16	1.33	1.08	0.25	79	78	66	1.94	1.4	77	0.015	98	98	51.5	0.12	0.55	15.42	99.25	160.64	156.13	60.74	160.00	160	68	68	66		1.001	4.547	452
644	103.348	104.118		0.16	0.16	1.33	1.08	0.25	79	78	66	1.94	1.4	77	0.012	109	110	51.5	-0.02	0.58	15.43	98.98	160.39	155.94	60.81	159.80	160	68	68	66		1.001	4.871	483
645	103.509	104.279		0.16	0.16	1.34	1.08	0.25	79	78	66	1.94	1.4	77	0.015	98	97	51.6	-0.09	0.59	15.45	98.41	160.14	155.61	61.01	159.42	161	68	68	66		1.001	4.875	480
646	103.669	104.442		0.16	0.16	1.34	1.08	0.25	79	78	66	1.93	1.4	78	0.016	94	95	51.5	0.03	0.53	15.4778748	98.30	160.01	155.48	60.94	159.24	161	68	68	66		1.001	4.391	432
647	103.830	104.605		0.16	0.16	1.33	1.08	0.25	79	78	66	1.94	1.4	78	0.014	101	102	51.4	0.10	0.57	15.5238562	97.77	159.71	155.15	61.16	158.93	161	68	68	66		1.001	4.711	461
648	103.990	104.767		0.16	0.16	1.33	1.08	0.25	79	78	66	1.93	1.4	78	0.015	97	98	51.5	-0.03	0.55	15.5207348	97.33	159.33	154.75	61.20	158.53	161	68	68	66		1.001	4.556	444
649	104.151	104.929		0.16	0.16	1.34	1.08	0.25	79	78	66	1.93	1.4	78	0.012	110	109	51.4	0.07	0.56	15.5381117	96.90	159.20	154.59	61.48	158.38	161	68	68	66		1.001	4.642	450
650	104.311	105.091		0.16	0.16	1.34	1.08	0.25	79	78	66	1.94	1.4	78	0.013	105	105	51.4	0.02	0.54	15.4506254	96.49	158.96	154.40	61.73	158.23	161	68	68	66		1.001	4.516	436
651	104.472	105.254		0.16	0.16	1.33	1.08	0.25	79	78	66	1.94	1.4	79	0.015	98	98	51.3	0.11	0.53	15.49788	95.79	158.68	154.09	62.09	157.89	162	68	68	66		1.001	4.381	420
652	104.632	105.417		0.16	0.16	1.34	1.08	0.25	79	78	66	1.95	1.4	79	0.011	114	115	51.2	0.05	0.57	15.4779558	95.61	158.54	153.92	62.17	157.78	164	68	68	66		1.001	4.707	451
653	104.793	105.579		0.16	0.16	1.34	1.07	0.25	79	78	66	1.94	1.4	79	0.015	98	98	51.1	0.17	0.55	15.4505939	95.48	158.37	153.83	62.06	157.55	169	69	68	66		1.001	4.542	434
654	104.953	105.741		0.16	0.16	1.34	1.08	0.25	79	78	66	1.94	1.4	80	0.015	98	98	51.0	0.07	0.55	15.4504538	95.39	158.28	153.81	62.07	157.45	176	69	69	66		1.001	4.548	434
655	105.114	105.903		0.16	0.16	1.33	1.08	0.25	79	78	66	1.94	1.4	81	0.014	102	101	50.7	0.28	0.57	15.4777966	95.81	158.24	153.77	61.67	157.48	185	69	69	66		1.001	4.708	452
656	105.274	106.066		0.16	0.16	1.33	1.08	0.25	79	78	66	1.93	1.4	83	0.013	105	106	50.4	0.30	0.53	15.5350561	96.00	158.29	153.84	61.47	157.47	198	69	69	66		1.001	4.382	421
657	105.435	106.227		0.16	0.16	1.33	1.07	0.25	79	78	66	1.94	1.4	86	0.013	106	105	50.1	0.34	0.58	15.6121426	96.30	158.35	153.88	61.26	157.56	209	69	69	66		1.001	4.863	469
658	105.594	106.388		0.16	0.16	1.32	1.08	0.25	79	78	66	1.94	1.4	87	0.012	109	110	49.8	0.29	0.53	15.4397087	96.44	158.60	154.07	61.34	157.77	221	69	69	66		1.001	4.382	423

Elapsed Time	Particulate Sampling Data																	Fuel Weight, lb		Flow, gpm		Temperature Data, oF												
	Gas Meter Cubic Feet (1)	Gas Meter Cubic Feet (2)	Gas Meter Cubic Feet (amb)	Sample Rate, cfm (1)	Sample Rate, cfm (2)	Orifice dH (1)	Orifice dH (2)	Orifice dH (amb)	Meter oF (1)	Meter oF (2)	Meter oF (amb)	Meter Vac. In. Hg. (1)	Meter Vac. In. Hg. (2)	Dilution Tunnel Temp.	Dilution Tunnel dP	Pro. Rate (%) (1)	Pro. Rate (%) (2)	Scale Reading	Weight Change	Load Side Liquid Flow Rate	Boiler Side Liquid Flow Rate (optional)	Thermopile ΔT	Boiler to Heat Exch. Temp.	Heat Exch to Boiler Temp.	Inlet Load Temp.	Outlet Load Temp.	Stack	Filter (1)	Filter (2)	Ambient		Specific Heat of Inlet Water (BTU/lb-°F)	Mass Flow Rate of Inlet Water (lb/min)	Heat Output, Btu
659	105.754	106.550		0.16	0.16	1.32	1.08	0.25	79	78	66	1.96	1.5	89	0.013	106	106	49.4	0.39	0.57	15.4215927	96.47	158.89	154.29	61.49	157.96	233	70	70	66		1.001	4.708	455
660	105.914	106.713		0.16	0.16	1.33	1.07	0.25	79	78	67	1.96	1.5	90	0.015	98	99	49.0	0.39	0.55	15.5296745	96.97	159.32	154.77	61.51	158.48	247	70	70	67		1.001	4.545	441
661	106.074	106.874		0.16	0.16	1.33	1.07	0.25	79	78	66	1.96	1.5	92	0.014	102	102	48.6	0.43	0.58	15.535471	97.55	159.79	155.29	61.43	158.97	263	70	70	66		1.001	4.869	475
662	106.234	107.035		0.16	0.16	1.33	1.07	0.25	79	78	66	1.95	1.5	94	0.014	102	102	48.3	0.25	0.57	15.4697466	98.27	160.38	155.77	61.19	159.46	278	71	70	66		1.001	4.708	463
663	106.394	107.196		0.16	0.16	1.33	1.07	0.25	79	78	66	1.97	1.5	96	0.014	102	102	47.8	0.51	0.53	15.468442	98.93	161.04	156.36	61.23	160.15	294	71	71	66		1.001	4.383	434
664	106.553	107.359		0.16	0.16	1.33	1.07	0.25	79	78	66	1.95	1.5	99	0.015	99	100	47.4	0.40	0.55	15.5356236	99.44	161.76	157.05	61.37	160.81	310	71	71	66		1.001	4.550	453
665	106.713	107.519		0.16	0.16	1.33	1.07	0.25	79	78	67	1.97	1.5	101	0.015	99	99	46.8	0.60	0.55	15.4733925	100.49	162.85	158.02	61.19	161.68	322	72	72	67		1.001	4.547	457
666	106.872	107.680		0.16	0.16	1.33	1.07	0.25	79	78	67	1.96	1.5	102	0.015	99	99	46.4	0.39	0.55	15.4780912	101.18	163.92	159.00	61.64	162.82	329	72	72	67		1.001	4.540	460
667	107.032	107.841		0.16	0.16	1.33	1.07	0.25	79	78	67	1.98	1.5	104	0.013	107	107	46.0	0.44	0.55	15.4771986	101.92	164.90	159.92	61.87	163.79	336	72	72	67		1.001	4.543	464
668	107.192	108.003		0.16	0.16	1.33	1.07	0.25	79	78	67	1.96	1.5	105	0.016	97	97	45.5	0.49	0.54	15.564888	102.70	165.89	160.83	61.96	164.66	342	72	72	67		1.001	4.539	467
669	107.352	108.163		0.16	0.16	1.33	1.07	0.25	79	78	67	1.97	1.5	106	0.015	100	99	45.0	0.48	0.53	15.4600401	103.54	167.07	161.90	62.19	165.74	347	73	73	67		1.001	4.374	453
670	107.512	108.324		0.16	0.16	1.33	1.07	0.25	79	78	67	1.97	1.5	106	0.013	107	107	44.4	0.57	0.54	15.6004133	104.28	168.12	162.90	62.52	166.81	351	73	73	67		1.001	4.537	474
671	107.671	108.486		0.16	0.16	1.32	1.07	0.25	79	78	67	1.97	1.5	107	0.013	107	108	44.1	0.32	0.56	15.5167599	105.40	169.37	164.01	62.67	168.07	355	73	73	67		1.001	4.700	496
672	107.831	108.646		0.16	0.16	1.32	1.07	0.25	79	78	67	1.97	1.5	108	0.014	104	103	43.7	0.44	0.56	15.4582806	105.84	170.40	165.06	63.26	169.10	359	73	73	67		1.001	4.702	498
673	107.990	108.807		0.16	0.16	1.32	1.07	0.25	79	78	67	1.97	1.5	109	0.013	107	107	43.0	0.62	0.56	15.5236731	106.61	171.46	166.09	63.55	170.16	364	74	74	67		1.001	4.697	501
674	108.149	108.968		0.16	0.16	1.33	1.07	0.25	79	78	67	1.98	1.5	110	0.014	103	104	42.5	0.56	0.53	15.5450554	108.30	172.57	167.19	62.98	171.29	368	74	74	67		1.001	4.379	475
675	108.309	109.130		0.16	0.16	1.33	1.06	0.25	79	78	67	1.97	1.5	110	0.016	97	97	42.1	0.36	0.56	15.3741789	110.29	174.01	168.57	62.28	172.58	372	74	74	67		1.001	4.702	519
676	108.468	109.290		0.16	0.16	1.32	1.07	0.25	79	78	67	1.98	1.5	111	0.014	103	103	41.6	0.54	0.56	15.4511595	111.90	175.25	169.89	62.06	173.95	375	74	74	67		1.001	4.702	527
677	108.628	109.450		0.16	0.16	1.33	1.07	0.25	79	78	67	1.97	1.5	112	0.015	100	100	41.0	0.59	0.51	15.5051289	113.52	176.67	171.32	61.79	175.31	378	75	75	67		1.001	4.218	479
678	108.786	109.612		0.16	0.16	1.33	1.07	0.25	79	78	67	1.98	1.5	112	0.014	103	104	40.7	0.32	0.56	15.4619827	115.32	178.00	172.58	61.41	176.73	380	75	75	67		1.001	4.703	543
679	108.946	109.771		0.16	0.16	1.32	1.06	0.25	79	79	67	1.98	1.5	112	0.012	112	110	40.0	0.69	0.53	15.5450907	116.09	178.96	173.42	61.61	177.70	382	75	75	67		1.001	4.378	509
680	109.106	109.932		0.16	0.16	1.32	1.06	0.25	79	79	67	1.99	1.5	113	0.014	104	104	39.7	0.28	0.53	15.4138432	117.35	180.10	174.48	61.47	178.83	385	75	75	67		1.001	4.382	515
681	109.265	110.093		0.16	0.16	1.33	1.06	0.25	79	78	67	1.97	1.5	114	0.014	103	104	39.1	0.64	0.56	15.4875517	118.07	181.47	175.65	61.98	180.06	387	76	76	67		1.001	4.705	556
682	109.424	110.252		0.16	0.16	1.31	1.06	0.25	79	79	67	1.99	1.5	114	0.013	107	106	38.6	0.45	0.51	15.3919725	119.33	182.95	176.93	62.07	181.40	384	76	76	67		1.001	4.231	505
683	109.583	110.413		0.16	0.16	1.32	1.06	0.25	79	79	68	1.96	1.5	93	0.014	102	102	38.4	0.25	0.56	15.3249302	119.85	184.18	178.15	62.95	182.80	340	75	75	68		1.001	4.701	564
684	109.743	110.574		0.16	0.16	1.32	1.06	0.25	79	79	68	1.97	1.5	87	0.015	98	98	38.1	0.28	0.53	15.47785	119.54	184.76	178.73	63.73	183.27	314	74	74	68		1.001	4.382	524
685	109.902	110.735		0.16	0.16	1.32	1.06	0.25	79	79	67	1.97	1.5	83	0.015	97	97	37.8	0.32	0.55	15.4779673	119.20	185.26	179.15	64.68	183.89	300	74	74	67		1.001	4.599	549
686	110.061	110.896		0.16	0.16	1.32	1.07	0.25	79	79	67	1.98	1.5	81	0.014	100	101	37.8	0.01	0.53	15.5073109	119.83	185.66	179.64	64.57	184.40	286	74	74	67		1.001	4.391	527
687	110.221	111.057		0.16	0.16	1.33	1.07	0.25	79	79	67	1.97	1.5	80	0.014	101	101	37.7	0.06	0.53	15.4125223	119.96	186.25	180.22	64.99	184.95	275	74	74	67		1.001	4.375	525
688	110.381	111.219		0.16	0.16	1.32	1.07	0.25	79	79	67	1.97	1.5	79	0.014	101	101	37.5	0.18	0.53	15.5552073	121.03	186.76	180.71	64.41	185.44	265	73	73	67		1.001	4.373	530
689	110.540	111.380		0.16	0.16	1.32	1.06	0.25	79	79	67	1.95	1.5	78	0.014	100	100	37.4	0.12	0.53	15.50665	121.46	186.85	180.92	64.37	185.84	257	73	73	67		1.001	4.373	532
690	110.701	111.541		0.16	0.16	1.32	1.07	0.25	79	79	67	1.95	1.4	78	0.016	95	94	37.4	-0.03	0.54	15.4687862	122.13	187.09	181.15	63.91	186.04	250	73	73	67		1.001	4.533	554
691	110.861	111.703		0.16	0.16	1.32	1.07	0.25	79	79	67	1.96	1.5	77	0.013	104	105	37.3	0.10	0.53	15.5268965	122.79	187.17	181.19	63.32	186.11	243	73	73	67		1.001	4.376	538
692	111.021	111.865		0.16	0.16	1.32	1.06	0.25	79	79	67	1.96	1.5	77	0.014	101	101	37.2	0.12	0.52	15.4014378	122.84	187.08	181.27	63.23	186.07	237	73	73	67		1.001	4.370	537
693	111.180	112.026		0.16	0.16	1.32	1.07	0.25	79	79	67	1.95	1.5	77	0.015	97	97	37.0	0.19	0.54	15.4866608	123.35	187.10	181.39	62.85	186.20	232	72	72	67		1.001	4.537	560
694	111.340	112.188		0.16	0.16	1.31	1.07	0.25	79	79	67	1.95	1.5	77	0.016	94	94	37.1	-0.08	0.54	15.4014215	123.83	187.16	181.40	62.44	186.27	227	72	72	67		1.001	4.532	562
695	111.500	112.349		0.16	0.16	1.32	1.07	0.25	79	79	67	1.96	1.4	75	0.014	100	100	37.0	0.10	0.55	15.5269165	123.63	187.15	181.33	62.64	186.27	225	72	72	67		1.001	4.542	562
696	111.659	112.511		0.16	0.16	1.32	1.07	0.25	80	79	67	1.96	1.4	74	0.013	103	104	37.1	-0.08	0.51	15.5652628	123.39	187.13	181.25	62.80	186.19	222	72	72	67		1.001	4.211	520
697	111.819	112.672		0.16	0.16	1.32	1.07	0.25	79	79	67	1.95	1.4	74	0.014	100	100	37.0	0.08	0.53	15.4684601	123.00	186.91	181.08	63.03	186.03	219	72	72	67		1.001	4.380	539
698	111.979	112.834		0.16	0.16	1.32	1.07	0.25	79	79	67	1.96	1.4	74	0.012	108	109	37.0	-0.02	0.54	15.506547	122.82	186.95	180.98	63.19	186.01	214	71	72	67		1.001	4.536	558
699	112.139	112.996		0.16	0.16	1.32	1.07	0.25	79	79	67	1.97	1.4	74	0.014	100	101	37.0	0.02	0.54	15.5355921	123.29	186.95	181.05	62.68	185.97	210	71	71	67		1.001	4.536	560
700	112.299	113.158		0.16	0.16	1.32	1.07	0.25	80	79	67	1.95	1.4	74	0.013	104	104	37.0	0.03	0.53	15.4606581	123.07	186.80	180.91	62.74	185.80	206	71	71	67		1.001	4.376	539
701	112.459	113.319		0.16	0.16	1.33	1.07	0.25	80	79	67	1.95	1.4	73	0.015	97	97	36.9	0.03	0.56	15.4305058	122.70	186.56	180.74	62.95	185.65	201	71	71	67		1.001	4.699	577
702	112.618	113.481		0.16	0.16	1.33	1.07	0.25	80	79	67	1.97	1.4	74	0.014	100	101	37.1	-0.15	0.54	15.4721603	122.74	186.47	180.59	62.80	185.54	198	71	71	67		1.001	4.503	553
703	112.778	113.644		0.16	0.16	1.33	1.07	0.25	80	79	67	1.95	1.4	73	0.013	104	105	37.1	0.00	0.54	15.4406013	122.56	186.42	180.54	62.87	185.44	194	71	71	67		1.001	4.537	557
704	112.939	113.805		0.16	0.16	1.33	1.06	0.25	80	79	67	1.97	1.4	73	0.013	105	104	37.0	0.08	0.54	15.4436846	122.53	186.37	180.45	62.90	185.42	190	71	71	67		1.001	4.536	556
705	113.099	113.966		0.16	0.16	1.32	1.07	0.25	80	79	67	1.95	1.5	73	0.015	97	97	36.9	0.14	0.58	15.468586	122.89	186.27	180.31	62.42	185.30	187	71	71	67		1.001	4.862	598
706	113.259	114.128		0.16	0.16	1.32	1.07	0.25	80	79	67	1.97	1.4	73	0.014	100	101	36.9	-0.03	0.54	15.50665	122.24	186.18	180.29	62.98	185.21	183	70	71	67		1.001	4.537	555
707	113.419	114.291		0.16	0.16	1.32	1.07	0.25	80	79	67	1.95	1.4	73	0.014	100	101	37.0	-0.11	0.53	15.5451298	121.88	185.89	179.96	63.06	184.94	180	70	70	67		1.001	4.376	534
708	113.579	114.452		0.16	0.16	1.32	1.07	0.25	80	79	67	1.95	1.4	73	0.013	104	104	36.9	0.11	0.53	15.5168343	120.99	185.69	179.74	63.75	184.74	177	70	70	67		1.001	4.378	530
709	113.739	114.613		0.16	0.16	1.32	1.07	0.25	80	79	67	1.97	1.4	73	0.014	100	100	36.9	0.00	0.53	15.3920021	119.97	185.63	179.70	64.63	184.59	174	70	70	67		1.001	4.377	526
710	113.899	114.775		0.16	0.16	1.32	1.07	0.25	80	79	67	1.95	1.4	73	0.016	94	94	36.8	0.05	0.53	15.4503212	120.60	185.49	179.72	63.95	184.55	171	70	70	67		1.001	4.374	528
711	114.059	114.938		0.16	0.16	1.32	1.07	0.25	80	79	67	1.96	1.4	73	0.014	100	101	37.0	-0.18	0.54	15.4399548	121.48	185.28	179.42	62.90	184.39	168	70	70	67		1.001	4.537	552
712	114.219	115.099		0.16	0.16	1.32	1.07	0.25	80	79	67	1.95	1.5	73	0.014	100	100	36.9	0.14	0.60	15.516489	121.41	185.23	179.39	62.71	184.11	166	70	70	67		1.001	5.022	610
713	114.378	115.261		0.16	0.16	1.32	1.07	0.25	80	79	67	1.95	1.4	73	0.015	96	97	36.8	0.01	0.56	15.4598761	121.46	185.03	179.25	62.63	184.10	163	70	70	67		1.001	4.705	572
714	114.538	115.422		0.16	0.16	1.33	1.07	0.25	80	79	67	1.95	1.4	73	0.016	94	93	37.0	-0.13	0.54	15.439867	121.38	184.95	179.16	62.59	183.97	160	70	70	67		1.001	4.537	551
715	114.698	115.585		0.16	0.16	1.33	1.07	0.25	80	79	67	1.97	1.4	73	0.013	104	105	36.9	0.08	0.54	15.5356779	121.53	184.70	179.02	62.31	183.84	158	70	70	67		1.001	4.534	552
716	114.858	115.746		0.16	0.16	1.33	1.06	0.25	80	79	67	1.96	1.4	73	0.014	100	100	36.9	0.01	0.54	15.4157114	121.41	184.51	178.90	62.21	183.62	155	70	70	67		1.001	4.539	552
717	115.018	115.908		0.16	0.16	1.33	1.07	0.25	80	79	67	1.95	1.4	73	0.014	100	101	37.0	-0.13	0.56	15.4857492	121.36	184.37	178.81	62.11	183.47	153	70	70	67		1.001	4.697	571
718	115.179	116.070		0.16	0.16	1.33	1.07	0.25	80	79	67	1.97	1.4	73	0.014	101	101	37.0	0.01	0.56	15.4960669	121.59	184.30	178.80	61.83	183.42	151	70	70	67		1.001	4.682	570
719	115.339	116.232		0.16	0.16	1.32	1.07	0.25	80	79	67	1.95	1.4	73	0.015	97	97	37.0	0.00	0.53	15.4557562	121.33	184.08	178.53	61.88	183.22	149	70	70	67		1.001	4.374	531

Elapsed Time	Particulate Sampling Data																	Fuel Weight, lb		Flow, gpm		Temperature Data, oF												
	Gas Meter Cubic Feet (1)	Gas Meter Cubic Feet (2)	Gas Meter Cubic Feet (amb)	Sample Rate, cfm (1)	Sample Rate, cfm (2)	Orifice dH (1)	Orifice dH (2)	Orifice dH (amb)	Meter oF (1)	Meter oF (2)	Meter oF (amb)	Meter Vac. In. Hg. (1)	Meter Vac. In. Hg. (2)	Dilution Tunnel Temp.	Dilution Tunnel dP	Pro. Rate (%) (1)	Pro. Rate (%) (2)	Scale Reading	Weight Change	Load Side Liquid Flow Rate	Boiler Side Liquid Flow Rate (optional)	Thermopile ΔT	Boiler to Heat Exch. Temp.	Heat Exch to Boiler Temp.	Inlet Load Temp.	Outlet Load Temp.	Stack	Filter (1)	Filter (2)	Ambient		Specific Heat of Inlet Water (BTU/lb-°F)	Mass Flow Rate of Inlet Water (lb/min)	Heat Output, Btu
720	115.500	116.394		0.16	0.16	1.33	1.07	0.25	80	79	67	1.96	1.4	73	0.015	97	97	37.0	-0.06	0.60	15.5477753	121.03	183.91	178.28	62.04	183.07	147	70	70	67		1.001	5.025	609
721	115.660	116.555		0.16	0.16	1.32	1.07	0.25	80	79	67	1.97	1.4	73	0.014	100	100	36.9	0.18	0.54	15.5405025	120.56	183.65	178.09	62.33	182.89	145	70	70	67		1.001	4.485	541
722	115.819	116.717		0.16	0.16	1.32	1.07	0.25	80	79	67	1.95	1.4	73	0.014	99	101	37.0	-0.12	0.54	15.5237522	120.71	183.57	177.99	61.98	182.69	144	69	69	67		1.001	4.536	548
723	115.980	116.880		0.16	0.16	1.32	1.07	0.25	80	79	67	1.95	1.4	73	0.015	97	98	37.0	0.03	0.54	15.5116644	120.69	183.32	177.76	61.79	182.48	142	69	69	67		1.001	4.537	548
724	116.140	117.041		0.16	0.16	1.32	1.07	0.25	80	79	67	1.96	1.4	73	0.014	100	100	36.9	0.08	0.53	15.4301205	120.44	183.16	177.50	61.80	182.24	140	69	69	67		1.001	4.373	527
725	116.299	117.202		0.16	0.16	1.31	1.06	0.25	80	79	67	1.98	1.5	83	0.012	108	109	36.7	0.23	0.58	15.4506884	120.15	182.90	177.23	61.79	181.95	181	71	71	67		1.001	4.863	585
726	116.459	117.363		0.16	0.16	1.32	1.07	0.25	80	79	67	1.96	1.5	81	0.013	105	104	36.7	-0.02	0.54	15.4301748	119.43	182.46	176.75	62.13	181.56	187	70	70	67		1.001	4.536	542
727	116.619	117.526		0.16	0.16	1.33	1.07	0.25	80	79	67	1.95	1.4	74	0.015	97	98	36.6	0.11	0.58	15.4636593	118.95	182.49	176.73	62.53	181.49	169	70	69	67		1.001	4.856	578
728	116.780	117.688		0.16	0.16	1.33	1.07	0.25	80	79	67	1.94	1.4	73	0.012	109	109	36.5	0.02	0.56	15.5237122	118.02	182.45	176.64	63.38	181.40	159	70	70	67		1.001	4.699	555
729	116.939	117.850		0.16	0.16	1.33	1.08	0.25	80	79	67	1.94	1.4	73	0.013	103	104	36.5	0.03	0.54	15.4681215	117.21	182.28	176.49	64.04	181.24	152	69	70	67		1.001	4.534	532
730	117.100	118.011		0.16	0.16	1.33	1.08	0.25	80	79	68	1.94	1.4	73	0.014	101	100	36.5	-0.04	0.54	15.5011625	117.10	182.10	176.30	63.89	180.98	148	69	69	68		1.001	4.534	532
731	117.260	118.175		0.16	0.16	1.33	1.07	0.25	80	79	67	1.96	1.4	73	0.015	97	98	36.5	0.04	0.54	15.4519567	116.45	181.94	176.16	64.34	180.79	144	69	69	67		1.001	4.533	529
732	117.420	118.336		0.16	0.16	1.32	1.07	0.25	80	79	67	1.94	1.4	73	0.014	100	100	36.6	-0.13	0.54	15.4910202	116.37	181.67	175.89	64.27	180.64	141	69	69	67		1.001	4.537	529
733	117.580	118.498		0.16	0.16	1.33	1.07	0.25	80	79	68	1.94	1.4	72	0.013	104	104	36.5	0.14	0.54	15.453742	116.57	181.51	175.93	63.93	180.51	139	69	69	68		1.001	4.536	529
734	117.741	118.660		0.16	0.16	1.33	1.07	0.25	80	79	67	1.94	1.4	73	0.015	97	97	36.6	-0.12	0.55	15.3595304	117.47	181.30	175.97	63.00	180.47	137	69	69	67		1.001	4.540	534
735	117.901	118.823		0.16	0.16	1.32	1.08	0.25	80	79	68	1.96	1.4	73	0.014	100	101	36.6	0.05	0.53	15.4956102	118.41	181.08	175.72	61.92	180.33	135	69	69	68		1.001	4.377	519
736	118.062	118.985		0.16	0.16	1.32	1.07	0.25	80	79	67	1.94	1.4	73	0.015	97	97	36.6	-0.05	0.53	15.4083061	118.04	180.91	175.58	62.10	180.14	133	69	69	67		1.001	4.415	522
737	118.223	119.146		0.16	0.16	1.32	1.07	0.25	80	79	67	1.94	1.4	73	0.014	101	100	36.5	0.08	0.55	15.5071096	118.06	180.63	175.30	61.90	179.96	132	69	69	67		1.001	4.542	537
738	118.383	119.308		0.16	0.16	1.33	1.08	0.25	80	79	67	1.94	1.4	73	0.015	97	97	36.5	0.04	0.58	15.5164309	117.61	180.47	175.08	62.06	179.68	130	69	69	67		1.001	4.842	570
739	118.543	119.471		0.16	0.16	1.32	1.07	0.25	80	79	67	1.94	1.4	73	0.016	94	95	36.6	-0.07	0.53	15.461298	117.08	180.24	174.82	62.36	179.44	129	69	69	67		1.001	4.380	513
740	118.703	119.633		0.16	0.16	1.32	1.07	0.25	80	79	68	1.96	1.4	73	0.014	100	101	36.4	0.16	0.53	15.4678469	117.00	180.05	174.57	62.19	179.19	127	69	69	68		1.001	4.377	513
741	118.864	119.795		0.16	0.16	1.32	1.07	0.25	80	79	67	1.94	1.4	73	0.016	94	94	36.5	-0.11	0.53	15.4391775	116.53	179.76	174.23	62.39	178.91	126	69	69	67		1.001	4.375	510
742	119.024	119.957		0.16	0.16	1.32	1.08	0.25	80	79	67	1.94	1.4	73	0.013	104	104	36.5	0.01	0.53	15.5054541	115.77	179.51	174.01	62.95	178.71	125	69	69	67		1.001	4.373	507
743	119.184	120.120		0.16	0.16	1.32	1.08	0.25	80	79	67	1.96	1.4	73	0.014	100	101	36.5	-0.03	0.56	15.468194	115.46	179.31	173.84	62.98	178.44	123	69	69	67		1.001	4.699	543
744	119.344	120.281		0.16	0.16	1.32	1.07	0.25	80	79	67	1.95	1.4	73	0.014	100	100	36.5	0.01	0.54	15.5066051	115.52	179.10	173.65	62.69	178.21	123	69	69	67		1.001	4.536	525
745	119.505	120.443		0.16	0.16	1.32	1.07	0.25	80	80	68	1.94	1.4	73	0.015	97	97	36.4	0.07	0.56	15.4982128	115.11	178.91	173.28	62.87	177.98	121	69	69	68		1.001	4.701	542
746	119.665	120.605		0.16	0.16	1.33	1.08	0.25	80	80	68	1.94	1.4	73	0.015	97	97	36.5	-0.03	0.54	15.4983959	115.16	178.79	173.34	62.71	177.87	120	69	69	68		1.001	4.537	523
747	119.825	120.768		0.16	0.16	1.33	1.08	0.25	80	80	67	1.94	1.4	73	0.013	104	105	36.6	-0.09	0.55	15.5451384	115.28	178.52	173.07	62.32	177.60	119	69	69	67		1.001	4.539	524
748	119.985	120.930		0.16	0.16	1.33	1.07	0.25	80	80	67	1.94	1.4	73	0.013	104	104	36.5	0.10	0.56	15.5067139	115.26	178.24	172.88	62.16	177.42	118	69	69	67		1.001	4.699	542
749	120.146	121.092		0.16	0.16	1.33	1.07	0.25	80	80	68	1.96	1.4	73	0.016	94	94	36.6	-0.10	0.56	15.4781389	114.91	177.95	172.66	62.23	177.14	117	69	69	68		1.001	4.702	541
750	120.306	121.254		0.16	0.16	1.33	1.08	0.25	80	80	68	1.94	1.4	73	0.012	108	108	36.5	0.12	0.53	15.3841057	115.01	177.75	172.46	61.91	176.92	117	69	69	68		1.001	4.379	504
751	120.466	121.416		0.16	0.16	1.33	1.07	0.25	80	80	68	1.96	1.4	72	0.014	100	100	36.3	0.11	0.56	15.6214495	114.63	177.55	172.32	62.04	176.67	115	69	69	68		1.001	4.700	539
752	120.627	121.579		0.16	0.16	1.33	1.08	0.25	80	80	68	1.94	1.4	73	0.015	97	98	36.4	-0.02	0.52	15.4305716	114.74	177.29	172.07	61.83	176.57	115	69	69	68		1.001	4.363	501
753	120.787	121.740		0.16	0.16	1.33	1.06	0.25	80	80	67	1.95	1.4	73	0.013	104	103	36.4	-0.04	0.54	15.4686337	114.63	177.19	171.92	61.70	176.33	114	69	69	67		1.001	4.524	519
754	120.948	121.902		0.16	0.16	1.33	1.07	0.25	80	80	68	1.95	1.4	73	0.015	97	97	36.5	-0.10	0.54	15.4399958	114.32	176.90	171.67	61.85	176.17	113	69	69	68		1.001	4.508	516
755	121.108	122.064		0.16	0.16	1.33	1.07	0.25	80	80	68	1.96	1.4	73	0.013	104	104	36.5	-0.05	0.53	15.4888134	114.06	176.68	171.44	61.87	175.93	112	69	69	68		1.001	4.377	500
756	121.269	122.227		0.16	0.16	1.32	1.07	0.25	80	80	68	1.95	1.4	74	0.013	105	105	36.4	0.16	0.53	15.4981499	113.42	176.42	171.09	62.20	175.62	139	69	69	68		1.001	4.378	497
757	121.429	122.388		0.16	0.16	1.33	1.07	0.25	80	80	68	1.95	1.5	81	0.016	94	94	36.3	0.08	0.54	15.4598627	112.62	176.13	170.78	62.73	175.35	170	70	70	68		1.001	4.537	512
758	121.589	122.550		0.16	0.16	1.33	1.07	0.25	80	80	68	1.96	1.4	76	0.014	100	101	36.2	0.13	0.53	15.4301157	112.34	175.85	170.49	62.67	175.00	154	69	69	68		1.001	4.377	492
759	121.749	122.712		0.16	0.16	1.32	1.08	0.25	80	80	68	1.95	1.4	73	0.013	104	104	36.4	-0.23	0.51	15.499547	112.32	175.61	170.32	62.45	174.77	140	69	69	68		1.001	4.209	473
760	121.910	122.875		0.16	0.16	1.32	1.07	0.25	80	80	68	1.94	1.4	73	0.014	101	101	36.3	0.13	0.56	15.497983	112.45	175.63	170.40	62.30	174.75	131	69	69	68		1.001	4.700	529
761	122.070	123.037		0.16	0.16	1.32	1.07	0.25	80	80	68	1.96	1.4	73	0.013	104	104	36.3	-0.06	0.54	15.4888363	112.16	175.36	170.07	62.36	174.52	126	69	69	68		1.001	4.539	510
762	122.230	123.199		0.16	0.16	1.32	1.07	0.25	80	80	68	1.96	1.4	73	0.016	94	94	36.4	-0.02	0.58	15.4506969	111.76	175.16	169.95	62.65	174.41	122	69	69	68		1.001	4.860	544
763	122.390	123.361		0.16	0.16	1.33	1.08	0.25	80	80	68	1.94	1.4	73	0.015	97	97	36.3	0.01	0.53	15.4982901	111.72	174.91	169.73	62.37	174.09	120	69	69	68		1.001	4.378	490
764	122.551	123.523		0.16	0.16	1.33	1.07	0.25	80	80	69	1.94	1.4	75	0.015	98	97	36.3	0.10	0.56	15.555563	111.69	174.69	169.61	62.29	173.98	118	69	69	69		1.001	4.692	525
765	122.711	123.685		0.16	0.16	1.32	1.07	0.25	80	80	68	1.95	1.4	73	0.013	104	104	36.3	-0.08	0.54	15.4779491	111.52	174.45	169.44	62.22	173.74	117	69	69	68		1.001	4.535	506
766	122.872	123.847		0.16	0.16	1.33	1.07	0.25	80	80	68	1.96	1.4	72	0.016	94	94	36.2	0.11	0.53	15.439743	111.13	174.19	169.14	62.30	173.44	115	69	69	68		1.001	4.378	487
767	123.031	124.009		0.16	0.16	1.33	1.07	0.25	80	80	68	1.95	1.4	72	0.015	96	97	36.2	0.02	0.54	15.4865473	111.34	173.95	168.85	61.92	173.26	114	69	69	68		1.001	4.536	506
768	123.192	124.172		0.16	0.16	1.33	1.08	0.25	80	80	68	1.95	1.4	72	0.015	97	97	36.2	-0.04	0.54	15.4805727	111.60	173.84	168.75	61.47	173.07	113	69	69	68		1.001	4.537	507
769	123.352	124.334		0.16	0.16	1.33	1.07	0.25	80	80	68	1.96	1.4	71	0.015	97	97	36.3	-0.11	0.51	15.5356598	111.38	173.57	168.59	61.43	172.82	112	69	69	68		1.001	4.221	471
770	123.513	124.495		0.16	0.16	1.33	1.07	0.25	80	80	68	1.96	1.4	71	0.014	101	100	36.2	0.10	0.51	15.4399643	111.45	173.21	168.36	61.11	172.56	111	69	69	68		1.001	4.210	470
771	123.673	124.658		0.16	0.16	1.33	1.08	0.25	80	80	67	1.95	1.4	71	0.015	97	97	36.3	-0.07	0.48	15.5833111	111.49	173.02	168.12	60.87	172.35	110	69	69	67		1.001	3.964	442
772	123.834	124.820		0.16	0.16	1.33	1.08	0.25	80	80	68	1.96	1.4	71	0.015	97	97	36.3	0.05	0.55	15.4615726	111.54	172.83	167.87	60.53	172.08	109	69	69	68		1.001	4.560	509
773	123.994	124.983		0.16	0.16	1.33	1.07	0.25	80	80	68	1.94	1.4	71	0.013	104	105	36.2	0.02	0.55	15.4866627	111.33	172.44	167.50	60.42	171.75	108	69	69	68		1.001	4.551	507
774	124.155	125.144		0.16	0.16	1.33	1.07	0.25	80	80	68	1.94	1.4	71	0.013	104	103	36.3	-0.10	0.55	15.506671	111.15	172.30	167.28	60.40	171.54	108	69	69	68		1.001	4.546	506
775	124.316	125.306		0.16	0.16	1.32	1.08	0.25	80	80	68	1.94	1.4	70	0.013	104	104	36.1	0.28	0.51	15.4688244	110.97	172.07	167.01	60.35	171.32	107	69	69	68		1.001	4.229	470
776	124.476	125.469		0.16	0.16	1.33	1.07	0.25	80	80	67	1.94	1.4	70	0.015	96	97	36.3	-0.19	0.57	15.4505463	110.71	171.90	166.77	60.36	171.07	106	69	69	67		1.001	4.714	523
777	124.636	125.632		0.16	0.16	1.33	1.08	0.25	80	80	67	1.94	1.4	70	0.013	104	104	36.2	0.03	0.53	15.5451584	110.65	171.59	166.53	60.26	170.91	105	69	69	67		1.001	4.390	486
778	124.797	125.794		0.16	0.16	1.32	1.07	0.25	80	80	67	1.94	1.4	70	0.014	100	100	36.3	-0.04	0.59	15.4400091	110.68	171.36	166.34	60.02	170.70	104	68	69	67		1.001	4.877	540
779	124.957	125.955		0.16	0.16	1.32	1.07	0.25	80	80	67	1.95	1.4	70	0.015	96	96	36.3	0.01	0.53	15.4660386	110.45	171.06	166.04	59.96	170.41	104	68	69	67		1.001	4.387	485
780	125.117	126.118		0.16	0.16	1.33	1.07	0.25	80	80	67	1.95	1.4	70	0.015	96	97	36.2	0.04	0.57	15.450923	110.20	170.87	165.83	59.88	170.09	103	68	68	67		1.001	4.715	520

Elapsed Time	Particulate Sampling Data																	Fuel Weight, lb		Flow, gpm		Temperature Data, oF													
	Gas Meter Cubic Feet (1)	Gas Meter Cubic Feet (2)	Gas Meter Cubic Feet (amb)	Sample Rate, cfm (1)	Sample Rate, cfm (2)	Orifice dH (1)	Orifice dH (2)	Orifice dH (amb)	Meter oF (1)	Meter oF (2)	Meter oF (amb)	Meter Vac. In. Hg. (1)	Meter Vac. In. Hg. (2)	Dilution Tunnel Temp.	Dilution Tunnel dP	Pro. Rate (%) (1)	Pro. Rate (%) (2)	Scale Reading	Weight Change	Load Side Liquid Flow Rate	Boiler Side Liquid Flow Rate (optional)	Thermopile ΔT	Boiler to Heat Exch. Temp.	Heat Exch to Boiler Temp.	Inlet Load Temp.	Outlet Load Temp.	Stack	Filter (1)	Filter (2)	Ambient		Specific Heat of Inlet Water (BTU/lb-°F)	Mass Flow Rate of Inlet Water (lb/min)	Heat Output, Btu
781	125.278	126.281		0.16	0.16	1.32	1.07	0.25	80	80	67	1.95	1.4	69	0.014	100	101	36.2	0.02	0.62	15.5181503	110.08	170.56	165.65	59.79	169.86	102	68	68	67		1.001	5.195	573
782	125.438	126.443		0.16	0.16	1.33	1.07	0.25	80	80	67	1.94	1.4	69	0.013	104	104	36.2	0.03	0.53	15.478116	109.92	170.37	165.43	59.71	169.63	102	68	68	67		1.001	4.394	484
783	125.598	126.605		0.16	0.16	1.33	1.08	0.25	80	80	67	1.94	1.4	69	0.015	96	97	36.2	-0.01	0.59	15.4015141	109.88	170.15	165.20	59.48	169.36	102	68	68	67		1.001	4.876	536
784	125.759	126.767		0.16	0.16	1.33	1.08	0.25	80	80	66	1.95	1.4	69	0.015	97	97	36.2	-0.03	0.53	15.4674568	109.76	169.90	164.96	59.39	169.14	101	68	68	66		1.001	4.389	482
785	125.920	126.930		0.16	0.16	1.33	1.08	0.25	80	80	66	1.95	1.4	69	0.014	100	101	36.3	-0.05	0.51	15.5553646	109.57	169.65	164.73	59.40	168.96	100	68	68	66		1.001	4.225	463
786	126.080	127.092		0.16	0.16	1.34	1.08	0.25	80	79	66	1.94	1.4	69	0.014	100	100	36.3	-0.03	0.53	15.4779043	109.14	169.44	164.44	59.52	168.67	100	68	68	66		1.001	4.389	480
787	126.240	127.254		0.16	0.16	1.33	1.07	0.25	80	79	66	1.95	1.4	69	0.014	100	100	36.3	0.01	0.52	15.4706573	108.96	169.12	164.21	59.50	168.46	100	68	68	66		1.001	4.358	475
788	126.400	127.417		0.16	0.16	1.33	1.08	0.25	80	79	66	1.94	1.4	72	0.013	104	105	36.3	0.00	0.52	15.433219	108.72	168.98	164.07	59.54	168.26	136	68	68	66		1.001	4.367	475
789	126.561	127.579		0.16	0.16	1.34	1.08	0.25	80	79	66	1.95	1.4	74	0.014	101	101	36.1	0.22	0.57	15.4427519	108.38	168.57	163.69	59.53	167.91	146	68	68	66		1.001	4.716	512
790	126.721	127.742		0.16	0.16	1.34	1.08	0.25	80	79	66	1.96	1.4	70	0.014	100	101	36.1	-0.05	0.55	15.5163746	108.16	168.38	163.44	59.51	167.66	129	67	68	66		1.001	4.579	496
791	126.882	127.904		0.16	0.16	1.34	1.08	0.25	80	79	66	1.94	1.4	69	0.014	100	100	36.2	-0.11	0.53	15.4784002	107.93	168.19	163.24	59.50	167.44	119	67	68	66		1.001	4.393	475
792	127.042	128.067		0.16	0.16	1.34	1.08	0.25	80	79	66	1.94	1.4	70	0.016	93	94	36.1	0.12	0.53	15.4886112	107.44	167.84	162.86	59.72	167.17	113	67	67	66		1.001	4.392	472
793	127.203	128.229		0.16	0.16	1.33	1.08	0.25	80	79	66	1.95	1.4	69	0.014	100	100	36.2	-0.13	0.55	15.515378	107.01	167.67	162.54	59.89	166.90	110	67	67	66		1.001	4.553	488
794	127.364	128.392		0.16	0.16	1.33	1.08	0.25	80	79	66	1.94	1.4	69	0.015	97	97	36.1	0.11	0.55	15.4775009	106.50	167.46	162.38	60.19	166.69	107	67	67	66		1.001	4.551	485
795	127.524	128.554		0.16	0.16	1.33	1.08	0.25	80	79	66	1.95	1.4	69	0.012	108	108	36.0	0.05	0.53	15.5357094	105.66	167.22	162.21	60.73	166.39	105	67	67	66		1.001	4.396	465
796	127.685	128.716		0.16	0.16	1.33	1.08	0.25	80	79	66	1.93	1.4	69	0.012	108	108	36.2	-0.16	0.55	15.5644693	105.60	167.04	162.05	60.64	166.24	104	67	67	66		1.001	4.557	482
797	127.846	128.878		0.16	0.16	1.33	1.08	0.25	80	79	66	1.95	1.4	69	0.014	100	100	36.2	-0.01	0.57	15.5166044	105.48	166.79	161.80	60.52	166.01	102	67	67	66		1.001	4.717	498
798	128.006	129.041		0.16	0.16	1.33	1.07	0.25	80	79	66	1.94	1.4	69	0.015	96	97	36.2	0.00	0.55	15.4528513	105.19	166.57	161.63	60.58	165.77	101	67	67	66		1.001	4.559	480
799	128.166	129.204		0.16	0.16	1.33	1.08	0.25	80	79	66	1.95	1.4	69	0.015	96	97	36.1	0.08	0.51	15.5067387	105.00	166.30	161.45	60.52	165.52	101	67	67	66		1.001	4.230	445
800	128.327	129.366		0.16	0.16	1.33	1.08	0.25	80	79	66	1.93	1.4	69	0.013	104	104	36.2	-0.04	0.57	15.5356894	104.88	166.10	161.28	60.47	165.36	100	67	67	66		1.001	4.714	495
801	128.487	129.528		0.16	0.16	1.32	1.08	0.25	80	79	66	1.94	1.4	69	0.015	96	97	36.1	0.03	0.49	15.5451317	104.54	165.87	161.06	60.54	165.08	99	67	67	66		1.001	4.063	425
802	128.648	129.690		0.16	0.16	1.32	1.08	0.25	80	79	66	1.94	1.4	69	0.014	100	100	36.1	0.04	0.51	15.4886494	104.47	165.62	160.74	60.42	164.89	98	67	67	66		1.001	4.226	442
803	128.808	129.854		0.16	0.16	1.33	1.08	0.25	80	79	66	1.95	1.4	70	0.013	104	105	36.2	-0.10	0.53	15.507412	103.76	165.36	160.48	60.79	164.55	98	67	67	66		1.001	4.383	455
804	128.968	130.016		0.16	0.16	1.33	1.07	0.25	80	79	67	1.94	1.4	70	0.012	108	108	36.1	0.08	0.53	15.4779902	103.17	165.14	160.21	61.14	164.30	98	67	67	67		1.001	4.385	453
805	129.129	130.178		0.16	0.16	1.33	1.08	0.25	80	79	67	1.94	1.4	72	0.013	104	104	36.2	-0.07	0.55	15.4216356	102.72	164.86	159.84	61.33	164.05	97	67	67	67		1.001	4.546	468
806	129.289	130.340		0.16	0.16	1.33	1.08	0.25	79	79	67	1.93	1.4	70	0.014	100	100	36.1	0.08	0.51	15.4982471	102.38	164.61	159.65	61.35	163.73	96	67	67	67		1.001	4.230	434
807	129.450	130.503		0.16	0.16	1.33	1.08	0.25	80	79	67	1.95	1.4	70	0.014	100	101	36.3	-0.13	0.55	15.5834036	101.93	164.43	159.57	61.73	163.66	96	67	67	67		1.001	4.543	464
808	129.610	130.665		0.16	0.16	1.33	1.07	0.25	79	79	67	1.96	1.4	70	0.015	97	97	36.1	0.11	0.56	15.5430632	102.30	164.22	159.37	61.10	163.40	95	67	67	67		1.001	4.705	482
809	129.770	130.827		0.16	0.16	1.33	1.08	0.25	79	79	66	1.94	1.4	70	0.015	97	97	36.2	-0.06	0.58	15.5494881	102.33	163.88	159.09	60.83	163.15	95	67	67	66		1.001	4.869	499
810	129.931	130.989		0.16	0.16	1.33	1.08	0.25	79	79	66	1.94	1.4	69	0.015	97	97	36.2	0.06	0.55	15.555151	102.55	163.72	158.99	60.41	162.95	95	67	67	66		1.001	4.551	467
811	130.091	131.152		0.16	0.16	1.33	1.08	0.25	79	79	66	1.94	1.4	69	0.011	113	114	36.2	-0.05	0.53	15.5269051	102.48	163.50	158.75	60.24	162.72	94	67	67	66		1.001	4.393	451
812	130.251	131.315		0.16	0.16	1.33	1.08	0.25	79	79	66	1.94	1.4	69	0.014	100	101	36.1	0.06	0.55	15.498064	102.43	163.24	158.49	60.05	162.48	93	67	67	66		1.001	4.555	467
813	130.412	131.477		0.16	0.16	1.34	1.07	0.25	79	79	66	1.96	1.4	69	0.013	104	104	36.1	0.03	0.57	15.4918022	101.81	162.99	158.13	60.37	162.18	93	67	67	66		1.001	4.719	481
814	130.573	131.639		0.16	0.16	1.34	1.08	0.25	79	79	66	1.94	1.4	69	0.013	104	104	36.2	-0.12	0.57	15.5575647	101.20	162.71	157.89	60.73	161.93	92	67	67	66		1.001	4.709	477
815	130.733	131.801		0.16	0.16	1.34	1.08	0.25	79	79	66	1.95	1.4	69	0.014	100	100	36.1	0.10	0.53	15.5168495	101.33	162.54	157.76	60.34	161.68	92	67	67	66		1.001	4.384	445
816	130.894	131.964		0.16	0.16	1.33	1.08	0.25	79	79	66	1.94	1.4	69	0.014	101	101	36.2	-0.11	0.60	15.5648165	101.09	162.31	157.54	60.42	161.51	92	67	67	66		1.001	5.030	509
817	131.054	132.126		0.16	0.16	1.33	1.07	0.25	79	79	66	1.95	1.4	69	0.012	108	108	36.1	0.18	0.55	15.535635	100.77	162.07	157.36	60.48	161.26	91	67	67	66		1.001	4.551	459
818	131.215	132.288		0.16	0.16	1.33	1.07	0.25	79	79	66	1.95	1.4	73	0.014	101	101	36.2	-0.17	0.55	15.4599371	100.67	161.80	157.03	60.36	161.03	136	67	67	66		1.001	4.559	459
819	131.375	132.450		0.16	0.16	1.33	1.08	0.25	79	78	66	1.94	1.4	75	0.015	97	97	36.1	0.14	0.55	15.4600697	100.27	161.58	156.79	60.45	160.72	153	67	67	66		1.001	4.557	457
820	131.535	132.613		0.16	0.16	1.33	1.08	0.25	79	78	66	1.94	1.4	75	0.013	104	105	36.1	0.00	0.57	15.4676752	100.39	161.35	156.60	60.16	160.55	163	67	67	66		1.001	4.717	474
821	131.696	132.775		0.16	0.16	1.32	1.08	0.25	79	78	66	1.96	1.4	76	0.015	98	98	35.9	0.17	0.55	15.611969	100.04	161.15	156.38	60.32	160.35	173	67	67	66		1.001	4.550	456
822	131.856	132.937		0.16	0.16	1.33	1.08	0.25	79	78	66	1.95	1.4	78	0.014	101	101	35.8	0.13	0.55	15.5069027	99.78	161.02	156.37	60.46	160.24	186	67	68	66		1.001	4.564	456
823	132.016	133.099		0.16	0.16	1.33	1.08	0.25	79	78	66	1.94	1.4	81	0.014	101	101	35.6	0.19	0.56	15.5316982	99.95	160.83	156.29	60.10	160.05	203	68	68	66		1.001	4.703	471
824	132.176	133.261		0.16	0.16	1.33	1.08	0.25	79	78	66	1.94	1.4	83	0.013	105	105	35.4	0.24	0.55	15.565362	99.83	160.70	156.18	60.14	159.96	218	68	68	66		1.001	4.557	455
825	132.336	133.424		0.16	0.16	1.33	1.08	0.25	79	78	66	1.94	1.4	85	0.014	101	102	35.2	0.16	0.55	15.5069885	99.60	160.64	156.06	60.24	159.84	230	68	68	66		1.001	4.557	454
826	132.496	133.585		0.16	0.16	1.33	1.08	0.25	79	78	66	1.95	1.4	87	0.013	105	105	34.9	0.30	0.58	15.4597816	99.70	160.68	156.04	60.19	159.89	241	68	68	66		1.001	4.797	479
827	132.656	133.747		0.16	0.16	1.33	1.08	0.25	79	78	66	1.95	1.4	88	0.014	102	102	34.7	0.19	0.59	15.5587902	99.79	160.88	156.17	60.26	160.04	251	69	69	66		1.001	4.903	490
828	132.816	133.909		0.16	0.16	1.33	1.08	0.25	79	78	66	1.95	1.5	90	0.012	110	111	34.4	0.33	0.56	15.5548716	99.89	161.11	156.43	60.36	160.25	261	69	69	66		1.001	4.701	470
829	132.976	134.072		0.16	0.16	1.33	1.08	0.25	79	78	66	1.97	1.5	91	0.014	102	103	34.0	0.38	0.55	15.4979677	100.30	161.59	156.91	60.29	160.59	272	69	69	66		1.001	4.546	456
830	133.136	134.233		0.16	0.16	1.33	1.07	0.25	79	78	66	1.96	1.5	93	0.015	99	98	33.9	0.15	0.55	15.459549	100.98	162.27	157.48	60.22	161.20	288	70	69	66		1.001	4.552	460
831	133.296	134.394		0.16	0.16	1.33	1.08	0.25	79	78	66	1.97	1.5	95	0.014	102	102	33.5	0.40	0.56	15.4983578	101.30	162.74	157.94	60.43	161.73	304	70	70	66		1.001	4.868	494
832	133.456	134.556		0.16	0.16	1.33	1.07	0.25	79	78	66	1.98	1.5	97	0.015	99	99	33.0	0.43	0.57	15.5070353	101.90	163.53	158.70	60.53	162.43	316	70	70	66		1.001	4.709	480
833	133.616	134.717		0.16	0.16	1.33	1.07	0.25	79	78	66	1.98	1.5	99	0.014	103	103	32.7	0.35	0.57	15.4780531	102.80	164.50	159.60	60.59	163.38	324	70	71	66		1.001	4.709	485
834	133.775	134.878		0.16	0.16	1.33	1.07	0.25	79	78	66	1.97	1.5	101	0.013	106	107	32.3	0.38	0.60	15.5231371	103.73	165.60	160.58	60.64	164.36	333	71	71	66		1.001	5.035	523
835	133.935	135.039		0.16	0.16	1.32	1.07	0.25	79	78	66	1.98	1.5	102	0.015	100	99	31.8	0.51	0.57	15.4685678	104.81	166.89	161.72	60.81	165.62	341	71	71	66		1.001	4.709	494
836	134.094	135.201		0.16	0.16	1.32	1.07	0.25	79	78	66	1.97	1.5	104	0.013	106	108	31.4	0.43	0.55	15.4684935	105.28	168.17	162.93	61.62	166.91	347	72	72	66		1.001	4.549	480
837	134.253	135.361		0.16	0.16	1.32	1.06	0.25	79	78	66	1.98	1.5	105	0.013	106	106	30.8	0.54	0.55	15.5552721	105.88	169.30	164.01	62.06	167.95	354	72	72	66		1.001	4.544	482
838	134.412	135.522		0.16	0.16	1.32	1.07	0.25	79	78	66	1.99	1.5	106	0.014	103	103	30.5	0.28	0.55	15.5268917	106.82	170.62	165.23	62.42	169.24	361	72	72	66		1.001	4.549	486
839	134.571	135.683		0.16	0.16	1.32	1.07	0.25	79	78	66	1.98	1.5	107	0.013	107	107	29.9	0.59	0.55	15.6032953	107.36	171.91	166.49	63.19	170.55	366	72	72	66		1.001	4.541	488
840	134.730	135.844		0.16	0.16	1.32	1.07	0.25	79	78	66	1.98	1.5	108	0.014	103	103	29.4	0.57	0.53	15.5570526	107.97	172.86	167.32	63.52	171.49	370	73	73	66		1.001	4.384	474
841	134.889	136.004		0.16	0.16	1.32	1.06	0.25	79	78	66	1.98	1.5	109	0.014	103	103	28.9	0.44	0.55	15.5488749	109.74	174.05	168.45	62.88	172.62	373	73	73	66		1.001	4.575	503

Elapsed Time	Particulate Sampling Data																	Fuel Weight, lb		Flow, gpm		Temperature Data, oF										Specific Heat of Inlet Water (BTU/lb-°F)	Mass Flow Rate of Inlet Water (lb/min)	Heat Output, Btu
	Gas Meter Cubic Feet (1)	Gas Meter Cubic Feet (2)	Gas Meter Cubic Feet (amb)	Sample Rate, cfm (1)	Sample Rate, cfm (2)	Orifice dH (1)	Orifice dH (2)	Orifice dH (amb)	Meter oF (1)	Meter oF (2)	Meter oF (amb)	Meter Vac. In. Hg. (1)	Meter Vac. In. Hg. (2)	Dilution Tunnel Temp.	Dilution Tunnel dP	Pro. Rate (%) (1)	Pro. Rate (%) (2)	Scale Reading	Weight Change	Load Side Liquid Flow Rate	Boiler Side Liquid Flow Rate (optional)	Thermopile ΔT	Boiler to Heat Exch. Temp.	Heat Exch to Boiler Temp.	Inlet Load Temp.	Outlet Load Temp.	Stack	Filter (1)	Filter (2)	Ambient				
842	135.049	136.164		0.16	0.16	1.31	1.07	0.25	79	78	66	2	1.5	109	0.014	104	103	28.4	0.51	0.56	15.5254354	110.18	175.32	169.60	63.57	173.75	378	73	73	66		1.001	4.659	514
843	135.208	136.325		0.16	0.16	1.32	1.06	0.25	79	78	66	1.98	1.5	110	0.013	107	107	27.9	0.50	0.56	15.4782066	111.76	176.93	171.25	63.70	175.46	381	74	74	66		1.001	4.622	517
844	135.367	136.485		0.16	0.16	1.31	1.06	0.25	79	78	67	2	1.5	111	0.012	111	111	27.4	0.54	0.55	15.4687147	113.66	178.39	172.63	63.34	177.00	385	74	74	67		1.001	4.588	522
845	135.526	136.645		0.16	0.16	1.31	1.06	0.25	79	78	67	2	1.5	111	0.014	103	103	26.8	0.54	0.53	15.5268917	114.52	179.58	173.77	63.62	178.14	387	74	74	67		1.001	4.384	503
846	135.684	136.806		0.16	0.16	1.31	1.06	0.25	79	78	67	2	1.5	112	0.013	106	108	26.5	0.29	0.56	15.4304428	116.57	181.19	175.29	63.18	179.75	389	74	74	67		1.001	4.705	549
847	135.843	136.966		0.16	0.16	1.32	1.06	0.25	79	78	67	1.99	1.5	112	0.016	97	96	26.0	0.50	0.55	15.5552588	117.40	182.87	176.82	63.75	181.15	388	75	75	67		1.001	4.543	534
848	136.002	137.126		0.16	0.16	1.32	1.06	0.25	79	78	67	1.98	1.5	103	0.015	99	99	25.6	0.42	0.53	15.4686089	118.43	184.16	178.07	64.22	182.64	368	74	74	67		1.001	4.380	519
849	136.161	137.287		0.16	0.16	1.32	1.06	0.25	79	78	68	1.99	1.5	89	0.014	101	102	25.5	0.13	0.55	15.4598398	119.69	185.34	179.31	64.18	183.87	330	74	74	68		1.001	4.539	544
850	136.320	137.447		0.16	0.16	1.32	1.06	0.25	79	78	67	1.98	1.5	85	0.014	101	101	25.2	0.24	0.55	15.5162477	120.65	186.48	180.42	64.23	184.88	309	73	73	67		1.001	4.543	549
851	136.480	137.608		0.16	0.16	1.32	1.06	0.25	79	78	67	1.97	1.5	81	0.015	98	97	24.9	0.33	0.55	15.5242729	122.09	186.84	180.83	63.38	185.47	295	73	73	67		1.001	4.539	555
852	136.640	137.769		0.16	0.16	1.31	1.07	0.25	79	78	67	1.99	1.5	80	0.014	101	101	24.9	0.02	0.55	15.4486532	123.82	187.37	181.55	62.24	186.06	282	73	73	67		1.001	4.540	563
853	136.799	137.930		0.16	0.16	1.31	1.06	0.25	79	78	67	1.97	1.5	79	0.014	100	101	24.6	0.31	0.53	15.5095434	124.86	187.94	182.21	61.97	186.83	271	73	73	67		1.001	4.379	547
854	136.958	138.091		0.16	0.16	1.31	1.06	0.25	79	78	67	1.98	1.5	78	0.014	100	101	24.6	-0.02	0.54	15.4684372	125.45	188.34	182.67	61.88	187.34	262	72	72	67		1.001	4.539	570
855	137.117	138.252		0.16	0.16	1.31	1.06	0.25	79	78	67	1.97	1.5	78	0.014	100	101	24.7	-0.06	0.55	15.459878	125.92	188.59	182.97	61.71	187.62	255	72	72	67		1.001	4.542	573
856	137.276	138.414		0.16	0.16	1.31	1.06	0.25	79	79	67	1.99	1.5	77	0.015	97	97	24.6	0.07	0.53	15.468708	126.44	188.70	183.00	61.34	187.78	247	72	72	67		1.001	4.383	555
857	137.435	138.574		0.16	0.16	1.31	1.06	0.25	79	78	67	1.97	1.5	77	0.013	104	104	24.5	0.14	0.53	15.4686222	126.17	188.76	182.99	61.65	187.62	241	72	72	67		1.001	4.383	554
858	137.594	138.735		0.16	0.16	1.32	1.06	0.25	79	78	67	1.99	1.5	76	0.013	104	104	24.4	0.05	0.54	15.4980707	126.00	188.81	182.97	61.87	187.87	235	72	72	67		1.001	4.537	572
859	137.754	138.897		0.16	0.16	1.32	1.06	0.25	79	79	67	1.98	1.5	76	0.014	101	101	24.4	0.00	0.56	15.50702	126.05	188.94	182.99	61.86	187.91	230	72	72	67		1.001	4.699	593
860	137.913	139.058		0.16	0.16	1.31	1.05	0.25	79	79	67	1.99	1.5	75	0.014	100	100	24.5	-0.06	0.56	15.4984226	125.80	189.03	183.06	62.19	187.99	227	72	72	67		1.001	4.654	586
861	138.073	139.219		0.16	0.16	1.31	1.06	0.25	79	79	67	1.97	1.5	74	0.015	97	97	24.4	0.06	0.54	15.4563427	125.34	188.85	182.87	62.60	187.94	224	71	71	67		1.001	4.538	569
862	138.233	139.380		0.16	0.16	1.31	1.06	0.25	79	79	67	1.99	1.5	74	0.014	100	100	24.3	0.06	0.55	15.4884939	125.44	188.81	182.95	62.49	187.93	221	71	71	67		1.001	4.539	570
863	138.392	139.542		0.16	0.16	1.31	1.06	0.25	79	79	67	1.97	1.5	74	0.015	96	97	24.2	0.15	0.55	15.4306593	124.87	188.63	182.70	62.78	187.65	216	71	71	67		1.001	4.541	568
864	138.551	139.702		0.16	0.16	1.30	1.06	0.25	79	79	67	1.97	1.5	73	0.014	100	99	24.3	-0.09	0.51	15.4168062	124.66	188.48	182.62	62.96	187.62	212	71	71	67		1.001	4.216	526
865	138.710	139.863		0.16	0.16	1.30	1.06	0.25	79	79	67	1.98	1.5	73	0.012	108	108	24.3	0.01	0.56	15.4849215	124.42	188.54	182.53	63.06	187.48	208	71	71	67		1.001	4.698	585
866	138.869	140.024		0.16	0.16	1.31	1.06	0.25	79	79	67	1.99	1.5	73	0.014	100	100	24.3	-0.07	0.53	15.5152521	124.48	188.34	182.44	62.90	187.38	203	71	71	67		1.001	4.379	546
867	139.028	140.186		0.16	0.16	1.31	1.06	0.25	79	79	67	1.98	1.5	73	0.010	118	119	24.1	0.26	0.55	15.4216604	124.51	188.22	182.31	62.75	187.26	199	70	71	67		1.001	4.542	566
868	139.187	140.346		0.16	0.16	1.31	1.06	0.25	79	79	67	1.97	1.5	73	0.015	96	96	24.3	-0.22	0.53	15.4306316	124.52	188.19	182.18	62.62	187.14	195	70	70	67		1.001	4.377	546
869	139.347	140.508		0.16	0.16	1.31	1.06	0.25	79	79	67	1.97	1.5	73	0.013	104	104	24.2	0.11	0.53	15.5083361	123.40	188.03	181.91	63.61	187.01	191	70	70	67		1.001	4.379	541
870	139.506	140.669		0.16	0.16	1.31	1.06	0.25	79	79	67	1.97	1.5	73	0.015	96	97	24.3	-0.13	0.54	15.4496021	121.47	188.00	181.87	65.38	186.85	188	70	70	67		1.001	4.532	551
871	139.666	140.830		0.16	0.16	1.31	1.06	0.25	79	79	67	1.97	1.5	73	0.016	94	93	24.2	0.07	0.52	15.4503345	121.15	187.77	181.65	65.54	186.69	185	70	70	67		1.001	4.369	530
872	139.826	140.991		0.16	0.16	1.31	1.06	0.25	79	79	67	1.97	1.5	73	0.014	100	100	24.3	-0.02	0.54	15.5067062	121.01	187.77	181.72	65.69	186.69	182	70	70	67		1.001	4.534	549
873	139.985	141.152		0.16	0.16	1.31	1.06	0.25	79	79	67	1.97	1.5	73	0.014	100	100	24.4	-0.10	0.54	15.5177355	121.30	187.50	181.51	65.16	186.45	178	70	70	67		1.001	4.536	551
874	140.144	141.314		0.16	0.16	1.31	1.06	0.25	80	79	67	1.97	1.5	73	0.016	93	94	24.2	0.19	0.54	15.3635244	121.65	187.40	181.47	64.72	186.37	175	70	70	67		1.001	4.537	553
875	140.303	141.475		0.16	0.16	1.30	1.06	0.25	80	79	67	1.98	1.5	73	0.015	96	97	24.1	0.08	0.58	15.4687052	121.43	187.26	181.25	64.79	186.21	172	70	70	67		1.001	4.864	591
876	140.462	141.636		0.16	0.16	1.31	1.06	0.25	80	79	67	1.98	1.5	73	0.015	96	97	24.2	-0.12	0.54	15.4474545	121.16	187.25	181.21	64.99	186.15	170	70	70	67		1.001	4.503	546
877	140.622	141.797		0.16	0.16	1.31	1.06	0.25	80	79	67	1.97	1.5	73	0.013	104	104	24.3	-0.06	0.54	15.5067387	120.95	187.13	181.06	65.06	186.01	167	70	70	67		1.001	4.479	542
878	140.781	141.959		0.16	0.16	1.31	1.06	0.25	80	79	67	1.98	1.5	73	0.015	96	97	24.2	0.03	0.53	15.4886532	120.71	186.87	180.86	65.05	185.76	164	70	70	67		1.001	4.407	533
879	140.940	142.119		0.16	0.16	1.32	1.06	0.25	80	79	67	1.99	1.5	75	0.014	100	99	24.1	0.11	0.54	15.4217167	121.61	186.76	180.89	64.15	185.76	162	70	70	67		1.001	4.537	552
880	141.099	142.280		0.16	0.16	1.31	1.06	0.25	80	79	67	1.98	1.5	73	0.013	103	104	24.3	-0.19	0.55	15.5269384	122.03	186.60	180.69	63.57	185.60	159	70	70	67		1.001	4.539	555
881	141.259	142.442		0.16	0.16	1.32	1.06	0.25	80	79	68	1.98	1.5	73	0.015	97	97	24.2	0.12	0.53	15.431015	122.68	186.49	180.67	62.81	185.49	157	69	70	68		1.001	4.380	538
882	141.419	142.603		0.16	0.16	1.32	1.06	0.25	80	79	68	1.98	1.5	72	0.014	100	100	24.3	-0.05	0.54	15.4756689	123.06	186.27	180.53	62.20	185.26	154	69	70	68		1.001	4.538	559
883	141.579	142.764		0.16	0.16	1.31	1.06	0.25	80	79	68	1.99	1.5	72	0.014	100	100	24.2	0.03	0.55	15.4256744	123.74	186.22	180.52	61.54	185.28	152	69	69	68		1.001	4.542	563
884	141.738	142.925		0.16	0.16	1.31	1.06	0.25	80	79	68	1.98	1.5	72	0.014	99	100	24.2	-0.02	0.53	15.5015574	123.80	185.98	180.35	61.37	185.16	150	69	69	68		1.001	4.380	543
885	141.897	143.087		0.16	0.16	1.31	1.06	0.25	80	79	67	1.98	1.5	72	0.014	99	100	24.3	-0.03	0.55	15.4215326	123.58	185.78	180.14	61.29	184.88	148	69	69	67		1.001	4.543	562
886	142.056	143.248		0.16	0.16	1.31	1.06	0.25	80	79	67	1.97	1.5	72	0.016	93	93	24.3	-0.02	0.55	15.5071239	123.52	185.59	179.95	61.20	184.72	146	69	69	67		1.001	4.544	562
887	142.216	143.409		0.16	0.16	1.31	1.06	0.25	80	79	67	1.98	1.5	71	0.014	100	100	24.2	0.11	0.57	15.450531	123.82	185.36	179.76	60.69	184.51	144	69	69	67		1.001	4.709	584
888	142.375	143.571		0.16	0.16	1.31	1.06	0.25	80	79	67	1.97	1.5	71	0.015	96	97	24.2	-0.09	0.58	15.4782085	123.47	185.14	179.56	60.79	184.26	142	69	69	67		1.001	4.868	602
889	142.534	143.732		0.16	0.16	1.31	1.06	0.25	80	79	67	1.97	1.5	71	0.015	96	96	24.2	0.04	0.57	15.4887257	123.39	185.04	179.36	60.84	184.22	141	69	69	67		1.001	4.712	582
890	142.694	143.893		0.16	0.16	1.32	1.06	0.25	80	79	67	1.98	1.5	71	0.013	104	103	24.3	-0.08	0.55	15.4888811	123.15	184.75	179.12	60.80	183.95	156	69	69	67		1.001	4.544	560
891	142.853	144.054		0.16	0.16	1.32	1.06	0.25	80	79	67	1.99	1.5	81	0.013	104	104	24.1	0.21	0.56	15.4877338	123.15	184.53	178.96	60.56	183.71	192	70	70	67		1.001	4.702	580
892	143.013	144.216		0.16	0.16	1.32	1.07	0.25	80	79	67	1.96	1.4	75	0.014	100	101	24.1	0.02	0.55	15.4121351	123.15	184.32	178.70	60.32	183.47	183	68	69	67		1.001	4.551	561
893	143.173	144.377		0.16	0.16	1.31	1.07	0.25	80	79	67	1.96	1.5	72	0.013	104	104	24.0	0.07	0.52	15.5196152	123.16	184.32	178.64	60.19	183.35	168	69	69	67		1.001	4.321	533
894	143.333	144.538		0.16	0.16	1.32	1.07	0.25	80	79	67	1.95	1.4	71	0.015	97	96	24.0	-0.06	0.55	15.526391	122.98	184.24	178.67	60.31	183.29	157	69	69	67		1.001	4.551	560
895	143.494	144.700		0.16	0.16	1.32	1.07	0.25	80	79	67	1.96	1.4	70	0.013	104	104	24.1	-0.04	0.58	15.5173435	123.14	183.99	178.25	60.01	183.15	151	68	69	67		1.001	4.872	601
896	143.653	144.863		0.16	0.16	1.32	1.07	0.25	80	79	67	1.95	1.4	70	0.015	96	97	23.8	0.24	0.51	15.4505014	122.39	183.93	178.04	60.53	182.91	147	68	69	67		1.001	4.289	526
897	143.813	145.024		0.16	0.16	1.32	1.07	0.25	80	79	66	1.96	1.4	70	0.013	104	103	23.9	-0.03	0.56	15.4675789	122.25	183.66	177.80	60.43	182.68	143	68	68	66		1.001	4.706	576
898	143.973	145.186		0.16	0.16	1.32	1.07	0.25	80	79	66	1.96	1.4	70	0.015	96	97	23.9	0.02	0.55	15.515604	121.90	183.40	177.59	60.51	182.41	141	68	68	66		1.001	4.543	554
899	144.133	145.348		0.16	0.16	1.32	1.07	0.25	80	79	66	1.95	1.4	70	0.014	100	100	23.9	0.00	0.56	15.5469141	121.86	183.24	177.42	60.41	182.27	138	68	68	66		1.001	4.705	574
900	144.293	145.510		0.16	0.16	1.32	1.07	0.25	80	79	66	1.96	1.4	70	0.016	93	94	24.0	-0.12	0.55	15.4688158	121.79	183.02	177.17	60.23	182.02	136	68	68	66		1.001	4.553	555
901	144.453	145.671		0.16	0.16	1.32	1.07	0.25	80	79	66	1.96	1.4	70	0.013	104	103	23.9	0.08	0.57	15.4875879	121.55	182.71	176.99	60.25	181.80	134	68	68	66		1.001	4.711	573
902	144.612	145.833		0.16	0.16	1.33	1.07	0.25	80	79	66	1.95	1.4	70	0.015	96	97	23.9	0.03	0.55	15.5068712	121.33	182.55	176.73	60.34	181.67	132	68	68	66		1.001	4.550	553

Elapsed Time	Particulate Sampling Data																	Fuel Weight, lb		Flow, gpm		Temperature Data, oF												
	Gas Meter Cubic Feet (1)	Gas Meter Cubic Feet (2)	Gas Meter Cubic Feet (amb)	Sample Rate, cfm (1)	Sample Rate, cfm (2)	Orifice dH (1)	Orifice dH (2)	Orifice dH (amb)	Meter oF (1)	Meter oF (2)	Meter oF (amb)	Meter Vac. In. Hg. (1)	Meter Vac. In. Hg. (2)	Dilution Tunnel Temp.	Dilution Tunnel dP	Pro. Rate (%) (1)	Pro. Rate (%) (2)	Scale Reading	Weight Change	Load Side Liquid Flow Rate	Boiler Side Liquid Flow Rate (optional)	Thermopile ΔT	Boiler to Heat Exch. Temp.	Heat Exch to Boiler Temp.	Inlet Load Temp.	Outlet Load Temp.	Stack	Filter (1)	Filter (2)	Ambient		Specific Heat of Inlet Water (BTU/lb-°F)	Mass Flow Rate of Inlet Water (lb/min)	Heat Output, Btu
903	144.772	145.995		0.16	0.16	1.33	1.07	0.25	80	79	66	1.96	1.4	69	0.013	104	104	23.9	-0.08	0.57	15.5712996	120.90	182.27	176.48	60.44	181.35	130	68	68	66		1.001	4.713	570
904	144.932	146.158		0.16	0.16	1.33	1.07	0.25	80	79	66	1.95	1.4	69	0.014	100	101	23.9	0.01	0.55	15.4507151	120.66	182.10	176.35	60.58	181.23	129	68	68	66		1.001	4.556	550
905	145.093	146.319		0.16	0.16	1.32	1.07	0.25	80	79	66	1.96	1.4	69	0.014	100	100	23.9	0.05	0.57	15.4983187	120.26	181.82	176.14	60.62	180.88	128	68	68	66		1.001	4.714	568
906	145.252	146.481		0.16	0.16	1.32	1.07	0.25	79	79	66	1.96	1.4	69	0.015	96	97	24.0	-0.11	0.55	15.4401264	119.91	181.68	175.96	60.77	180.69	126	68	68	66		1.001	4.550	546
907	145.413	146.643		0.16	0.16	1.33	1.07	0.25	79	79	66	1.96	1.4	69	0.014	101	100	24.0	0.02	0.55	15.4983892	119.57	181.40	175.61	60.88	180.45	125	68	68	66		1.001	4.548	544
908	145.573	146.806		0.16	0.16	1.33	1.07	0.25	79	79	66	1.95	1.4	69	0.014	100	101	24.0	-0.01	0.55	15.4598846	119.29	181.26	175.64	61.04	180.32	123	67	68	66		1.001	4.547	543
909	145.733	146.967		0.16	0.16	1.32	1.07	0.25	79	79	67	1.96	1.4	70	0.016	94	93	24.0	0.00	0.56	15.5109797	118.97	181.05	175.38	61.12	180.09	122	68	68	67		1.001	4.705	560
910	145.893	147.129		0.16	0.16	1.33	1.07	0.25	79	79	67	1.95	1.4	70	0.016	94	94	24.0	-0.05	0.51	15.4782038	118.63	180.85	175.15	61.22	179.85	121	68	68	67		1.001	4.226	502
911	146.053	147.291		0.16	0.16	1.31	1.07	0.25	79	79	67	1.95	1.4	72	0.016	94	94	23.8	0.25	0.53	15.4345417	118.46	180.57	174.87	61.22	179.68	120	68	68	67		1.001	4.383	520
912	146.213	147.453		0.16	0.16	1.32	1.07	0.25	79	79	67	1.97	1.4	71	0.013	104	104	23.9	-0.13	0.51	15.5080137	118.18	180.38	174.78	61.28	179.46	119	68	68	67		1.001	4.226	500
913	146.373	147.615		0.16	0.16	1.32	1.07	0.25	79	79	67	1.95	1.4	70	0.014	100	100	23.9	0.03	0.56	15.5095758	118.06	180.09	174.66	61.21	179.26	118	68	68	67		1.001	4.689	554
914	146.533	147.776		0.16	0.16	1.32	1.07	0.25	79	79	67	1.96	1.4	70	0.015	97	96	23.9	0.02	0.55	15.4889107	118.03	179.88	174.60	61.06	179.08	117	68	68	67		1.001	4.549	538
915	146.693	147.938		0.16	0.16	1.32	1.07	0.25	79	79	67	1.97	1.4	70	0.015	97	97	23.9	-0.07	0.53	15.4397497	117.90	179.72	174.20	60.96	178.85	115	68	68	67		1.001	4.378	517
916	146.853	148.101		0.16	0.16	1.32	1.07	0.25	79	79	67	1.96	1.4	70	0.015	97	97	23.9	0.02	0.53	15.5553083	117.63	179.41	173.93	60.91	178.53	114	68	68	67		1.001	4.389	517
917	147.013	148.262		0.16	0.16	1.32	1.07	0.25	79	79	67	1.96	1.4	70	0.015	97	96	24.0	-0.11	0.55	15.4506187	117.54	179.23	173.66	60.81	178.36	114	68	68	67		1.001	4.552	536
918	147.172	148.424		0.16	0.16	1.33	1.07	0.25	79	79	66	1.95	1.4	70	0.012	107	108	23.9	0.12	0.53	15.430501	117.73	178.96	173.51	60.48	178.21	113	68	68	66		1.001	4.393	518
919	147.333	148.586		0.16	0.16	1.32	1.07	0.25	79	79	66	1.95	1.4	69	0.012	109	108	23.8	0.12	0.58	15.4363222	117.61	178.69	173.20	60.30	177.91	112	67	68	66		1.001	4.872	574
920	147.492	148.748		0.16	0.16	1.32	1.07	0.25	79	79	66	1.95	1.4	69	0.014	99	100	24.0	-0.29	0.59	15.4621811	117.47	178.55	173.02	60.26	177.73	111	67	68	66		1.001	4.877	574
921	147.653	148.910		0.16	0.16	1.32	1.07	0.25	79	78	66	1.95	1.4	69	0.013	104	104	24.1	-0.05	0.55	15.5451021	117.22	178.19	172.65	60.07	177.28	110	67	67	66		1.001	4.554	534
922	147.813	149.071		0.16	0.16	1.33	1.06	0.25	79	78	66	1.97	1.5	75	0.014	100	100	23.9	0.17	0.53	15.4781542	116.84	177.96	172.46	60.18	177.02	151	68	68	66		1.001	4.389	513
923	147.973	149.233		0.16	0.16	1.32	1.07	0.25	79	78	66	1.96	1.4	78	0.014	101	101	23.8	0.14	0.53	15.516284	116.77	177.86	172.29	60.24	177.01	172	68	68	66		1.001	4.389	513
924	148.133	149.395		0.16	0.16	1.33	1.07	0.25	79	78	66	1.95	1.4	71	0.014	100	101	23.8	-0.03	0.53	15.5071325	116.33	177.49	172.01	60.22	176.55	149	67	68	66		1.001	4.386	511
925	148.293	149.556		0.16	0.16	1.33	1.07	0.25	79	78	66	1.95	1.4	69	0.014	100	100	23.8	0.03	0.57	15.4625626	116.29	177.39	171.95	60.18	176.47	137	67	67	66		1.001	4.712	549
926	148.453	149.718		0.16	0.16	1.31	1.08	0.25	79	78	66	1.96	1.4	69	0.015	97	97	23.9	-0.08	0.55	15.5268602	116.47	177.02	171.67	59.84	176.32	129	67	67	66		1.001	4.555	531
927	148.613	149.880		0.16	0.16	1.32	1.07	0.25	79	78	66	1.96	1.4	69	0.015	97	97	23.7	0.13	0.55	15.4911776	116.43	176.84	171.46	59.63	176.06	125	67	67	66		1.001	4.585	534
928	148.773	150.043		0.16	0.16	1.32	1.07	0.25	79	78	66	1.96	1.4	69	0.014	100	101	23.9	-0.15	0.53	15.440279	116.58	176.60	171.37	59.42	176.00	121	67	67	66		1.001	4.413	515
929	148.932	150.204		0.16	0.16	1.32	1.07	0.25	79	78	66	1.95	1.4	69	0.013	103	103	23.8	0.10	0.53	15.5353289	116.26	176.33	171.01	59.33	175.58	119	67	67	66		1.001	4.424	515
930	149.092	150.366		0.16	0.16	1.33	1.07	0.25	79	78	66	1.95	1.4	69	0.014	100	100	23.8	-0.06	0.53	15.4505281	115.94	176.17	170.91	59.44	175.38	117	67	67	66		1.001	4.392	510
931	149.252	150.528		0.16	0.16	1.33	1.07	0.25	79	78	66	1.95	1.4	69	0.014	100	100	23.9	-0.10	0.57	15.4986868	115.52	175.85	170.59	59.56	175.07	115	67	67	66		1.001	4.717	546
932	149.412	150.691		0.16	0.16	1.32	1.07	0.25	79	78	66	1.96	1.4	69	0.015	97	98	23.9	0.07	0.55	15.5450687	115.40	175.58	170.34	59.47	174.87	114	67	67	66		1.001	4.553	526
933	149.572	150.852		0.16	0.16	1.33	1.07	0.25	79	78	66	1.95	1.4	69	0.014	100	100	23.9	-0.08	0.53	15.4504137	114.93	175.38	170.13	59.71	174.64	112	67	67	66		1.001	4.392	505
934	149.732	151.014		0.16	0.16	1.33	1.07	0.25	79	78	66	1.95	1.4	69	0.015	97	97	23.9	0.03	0.59	15.5066891	114.80	175.20	169.97	59.68	174.48	111	67	67	66		1.001	4.882	561
935	149.892	151.176		0.16	0.16	1.32	1.07	0.25	79	78	66	1.95	1.4	69	0.015	97	97	23.8	0.17	0.55	15.4610682	114.25	174.91	169.62	59.86	174.12	110	67	67	66		1.001	4.558	521
936	150.052	151.339		0.16	0.16	1.33	1.07	0.25	79	78	66	1.95	1.4	69	0.014	100	101	23.7	0.04	0.55	15.5259991	114.10	174.75	169.55	59.96	174.06	109	67	67	66		1.001	4.555	520
937	150.213	151.500		0.16	0.16	1.32	1.07	0.25	79	78	66	1.95	1.4	69	0.015	97	96	23.9	-0.18	0.55	15.5933599	113.56	174.50	169.34	60.19	173.75	108	67	67	66		1.001	4.550	517
938	150.373	151.662		0.16	0.16	1.32	1.07	0.25	79	78	66	1.96	1.4	69	0.015	97	97	23.9	-0.01	0.55	15.4395361	113.46	174.22	169.06	60.00	173.46	107	67	67	66		1.001	4.553	517
939	150.533	151.823		0.16	0.16	1.32	1.07	0.25	79	78	66	1.96	1.4	69	0.013	104	103	23.8	0.09	0.57	15.5454874	113.42	174.00	168.86	59.85	173.27	107	67	67	66		1.001	4.715	535
940	150.693	151.986		0.16	0.16	1.33	1.07	0.25	79	78	66	1.95	1.4	70	0.014	100	101	23.8	0.00	0.57	15.4601851	113.11	173.76	168.67	59.95	173.05	106	67	67	66		1.001	4.708	533
941	150.853	152.148		0.16	0.16	1.32	1.07	0.25	79	78	66	1.96	1.4	69	0.014	100	100	23.9	-0.09	0.53	15.5157681	112.65	173.53	168.45	60.11	172.76	105	67	67	66		1.001	4.384	494
942	151.013	152.309		0.16	0.16	1.32	1.07	0.25	79	78	66	1.94	1.4	70	0.014	100	100	23.9	0.03	0.55	15.5552549	112.20	173.21	168.06	60.25	172.45	104	67	67	66		1.001	4.554	512
943	151.173	152.471		0.16	0.16	1.32	1.07	0.25	79	78	66	1.95	1.4	70	0.014	100	100	23.8	0.09	0.56	15.5550919	111.96	172.97	167.76	60.22	172.18	103	67	67	66		1.001	4.707	528
944	151.332	152.634		0.16	0.16	1.32	1.07	0.25	79	78	67	1.96	1.4	70	0.014	99	101	23.9	-0.12	0.57	15.5652018	111.53	172.74	167.53	60.31	171.83	102	67	67	67		1.001	4.709	526
945	151.492	152.795		0.16	0.16	1.32	1.07	0.25	79	78	66	1.96	1.4	70	0.015	97	96	23.9	0.00	0.58	15.5160904	111.21	172.53	167.32	60.47	171.69	102	67	67	66		1.001	4.852	540
946	151.652	152.956		0.16	0.16	1.32	1.07	0.25	79	78	66	1.95	1.4	70	0.014	100	100	23.9	0.04	0.55	15.5930872	110.89	172.26	167.14	60.51	171.39	101	67	67	66		1.001	4.583	509
947	151.812	153.118		0.16	0.16	1.32	1.07	0.25	79	78	66	1.96	1.4	70	0.014	100	100	24.0	-0.11	0.55	15.4981928	110.50	172.10	167.01	60.80	171.30	100	67	67	66		1.001	4.553	504
948	151.972	153.281		0.16	0.16	1.32	1.07	0.25	79	78	67	1.96	1.4	70	0.014	100	101	23.9	0.05	0.55	15.4980688	110.20	171.88	166.82	60.84	171.03	100	67	67	67		1.001	4.542	501
949	152.132	153.442		0.16	0.16	1.33	1.07	0.25	79	78	67	1.96	1.4	70	0.014	100	100	23.7	0.19	0.54	15.4394341	109.93	171.55	166.53	60.86	170.79	99	67	67	67		1.001	4.538	499
950	152.292	153.603		0.16	0.16	1.33	1.07	0.25	79	78	67	1.95	1.4	70	0.014	100	100	23.9	-0.12	0.56	15.5071173	109.74	171.43	166.37	60.93	170.67	99	67	67	67		1.001	4.703	517
951	152.452	153.765		0.16	0.16	1.32	1.07	0.25	79	78	67	1.96	1.4	71	0.014	100	101	23.9	-0.03	0.54	15.4909458	109.42	171.12	166.18	61.02	170.44	99	67	67	67		1.001	4.536	497
952	152.613	153.928		0.16	0.16	1.33	1.07	0.25	79	78	66	1.96	1.4	70	0.014	101	101	23.8	0.04	0.56	15.5069227	109.31	170.91	165.92	60.91	170.22	98	67	67	66		1.001	4.705	515
953	152.773	154.089		0.16	0.16	1.32	1.06	0.25	79	78	66	1.95	1.4	71	0.014	100	100	23.8	0.02	0.54	15.4536448	109.03	170.61	165.61	60.83	169.87	100	67	67	66		1.001	4.539	495
954	152.932	154.250		0.16	0.16	1.32	1.07	0.25	79	78	66	1.95	1.4	74	0.016	93	94	24.0	-0.18	0.60	15.4349995	108.85	170.34	165.41	60.81	169.66	144	68	68	66		1.001	5.026	548
955	153.092	154.412		0.16	0.16	1.33	1.07	0.25	79	78	66	1.95	1.4	73	0.015	97	97	23.9	0.11	0.55	15.4399347	108.31	170.09	165.14	61.04	169.36	140	67	68	66		1.001	4.542	493
956	153.252	154.574		0.16	0.16	1.32	1.07	0.25	79	78	66	1.96	1.4	71	0.014	100	101	23.8	0.11	0.55	15.5268917	107.91	169.81	164.89	61.17	169.07	125	67	68	66		1.001	4.541	491
957	153.412	154.736		0.16	0.16	1.32	1.06	0.25	79	78	67	1.96	1.4	71	0.014	100	101	23.8	-0.04	0.51	15.4460459	107.72	169.66	164.70	61.16	168.88	117	67	68	67		1.001	4.215	455
958	153.571	154.897		0.16	0.16	1.32	1.07	0.25	79	78	66	1.96	1.4	71	0.013	103	104	23.8	0.02	0.55	15.5262852	107.48	169.43	164.53	61.18	168.65	112	67	68	66		1.001	4.544	489
959	153.731	155.059		0.16	0.16	1.32	1.07	0.25	79	78	66	1.95	1.4	71	0.014	100	101	23.9	-0.09	0.53	15.5063848	107.18	169.20	164.24	61.24	168.43	108	67	68	66		1.001	4.377	470
960	153.891	155.221		0.16	0.16	1.32	1.07	0.25	79	78	66	1.97	1.4	71	0.014	100	101	23.8	0.10	0.54	15.477828	106.70	168.90	163.93	61.49	168.19	106	67	68	66		1.001	4.540	485
961	154.051	155.382		0.16	0.16	1.32	1.07	0.25	79	78	67	1.95	1.4	71	0.015	97	97	23.9	-0.07	0.56	15.4981976	106.29	168.71	163.65	61.64	167.93	105	68	68	67		1.001	4.687	499
962	154.211	155.544		0.16	0.16	1.32	1.07	0.25	79	78	67	1.97	1.4	71	0.015	97	97	23.8	0.03	0.55	15.4979744	105.81	168.47	163.47	61.86	167.66	103	68	68	67		1.001	4.540	481
963	154.371	155.706		0.16	0.16	1.32	1.07	0.25	79	78	67	1.95	1.4	71	0.015	97	97	23.9	-0.08	0.51	15.5066214	105.48	168.14	163.11	61.82	167.30	102	68	68	67		1.001	4.213	445

Elapsed Time	Particulate Sampling Data																	Fuel Weight, lb		Flow, gpm		Temperature Data, oF												
	Gas Meter Cubic Feet (1)	Gas Meter Cubic Feet (2)	Gas Meter Cubic Feet (amb)	Sample Rate, cfm (1)	Sample Rate, cfm (2)	Orifice dH (1)	Orifice dH (2)	Orifice dH (amb)	Meter oF (1)	Meter oF (2)	Meter oF (amb)	Meter Vac. In. Hg. (1)	Meter Vac. In. Hg. (2)	Dilution Tunnel Temp.	Dilution Tunnel dP	Pro. Rate (%) (1)	Pro. Rate (%) (2)	Scale Reading	Weight Change	Load Side Liquid Flow Rate	Boiler Side Liquid Flow Rate (optional)	Thermopile ΔT	Boiler to Heat Exch. Temp.	Heat Exch to Boiler Temp.	Inlet Load Temp.	Outlet Load Temp.	Stack	Filter (1)	Filter (2)	Ambient		Specific Heat of Inlet Water (BTU/lb-°F)	Mass Flow Rate of Inlet Water (lb/min)	Heat Output, Btu
964	154.530	155.868		0.16	0.16	1.33	1.07	0.25	79	78	67	1.95	1.4	71	0.014	99	101	23.8	0.08	0.56	15.3874521	105.09	167.87	162.80	61.95	167.04	101	68	68	67		1.001	4.699	494
965	154.691	156.029		0.16	0.16	1.32	1.07	0.25	79	78	67	1.97	1.4	71	0.015	97	97	23.9	-0.10	0.51	15.5651093	104.76	167.68	162.65	62.10	166.85	101	68	68	67		1.001	4.238	445
966	154.851	156.191		0.16	0.16	1.32	1.07	0.25	79	78	67	1.95	1.4	71	0.017	91	91	23.9	0.07	0.53	15.5156984	103.89	167.45	162.37	62.77	166.67	100	68	68	67		1.001	4.375	455
967	155.011	156.353		0.16	0.16	1.31	1.06	0.25	79	78	67	1.96	1.4	71	0.015	97	97	23.9	0.00	0.56	15.5162888	103.31	167.19	162.18	63.02	166.33	99	68	68	67		1.001	4.698	486
968	155.171	156.515		0.16	0.16	1.32	1.06	0.25	79	78	67	1.96	1.4	71	0.015	97	97	23.8	0.07	0.60	15.4844961	103.28	167.02	162.03	62.79	166.07	99	68	68	67		1.001	5.024	520
969	155.331	156.676		0.16	0.16	1.31	1.07	0.25	79	78	67	1.95	1.4	71	0.013	104	104	23.8	-0.02	0.56	15.488534	103.16	166.79	161.75	62.74	165.90	98	68	68	67		1.001	4.701	485
970	155.491	156.838		0.16	0.16	1.31	1.07	0.25	79	78	67	1.96	1.4	71	0.013	104	104	23.7	0.08	0.58	15.536314	102.72	166.55	161.56	63.00	165.72	97	68	68	67		1.001	4.865	500
971	155.650	157.000		0.16	0.16	1.32	1.07	0.25	79	78	67	1.96	1.4	71	0.014	99	101	23.9	-0.13	0.55	15.5163679	102.84	166.26	161.30	62.53	165.37	97	68	68	67		1.001	4.539	467
972	155.810	157.162		0.16	0.16	1.32	1.07	0.25	79	78	67	1.97	1.4	71	0.012	108	109	23.8	0.08	0.58	15.4014101	102.81	165.95	161.00	62.27	165.08	96	68	68	67		1.001	4.863	500
973	155.970	157.323		0.16	0.16	1.32	1.07	0.25	79	78	67	1.95	1.4	71	0.016	94	93	23.8	0.03	0.54	15.5160589	102.87	165.82	160.95	62.05	164.92	95	68	68	67		1.001	4.538	467
974	156.130	157.485		0.16	0.16	1.32	1.06	0.25	79	78	67	1.95	1.4	71	0.015	97	97	23.8	0.02	0.55	15.4502201	103.10	165.59	160.82	61.71	164.81	95	68	68	67		1.001	4.543	469
975	156.289	157.647		0.16	0.16	1.33	1.07	0.25	79	78	67	1.95	1.4	71	0.014	99	101	23.9	-0.12	0.56	15.4758692	102.88	165.39	160.54	61.67	164.55	94	68	68	67		1.001	4.703	484
976	156.449	157.809		0.16	0.16	1.32	1.07	0.25	79	78	67	1.95	1.4	71	0.016	94	94	23.9	0.02	0.53	15.5269384	102.86	165.07	160.35	61.48	164.34	94	68	68	67		1.001	4.378	451
977	156.609	157.970		0.16	0.16	1.33	1.07	0.25	79	78	67	1.97	1.4	71	0.014	100	100	23.8	0.09	0.55	15.5362997	102.70	164.90	160.18	61.43	164.13	93	68	68	67		1.001	4.542	467
978	156.769	158.132		0.16	0.16	1.33	1.07	0.25	79	78	67	1.97	1.4	71	0.014	100	101	23.8	-0.08	0.51	15.4979362	102.41	164.64	159.87	61.42	163.83	93	68	68	67		1.001	4.216	432
979	156.930	158.295		0.16	0.16	1.33	1.07	0.25	79	78	67	1.97	1.4	71	0.014	101	101	23.8	0.05	0.55	15.5070562	101.98	164.34	159.53	61.63	163.61	92	68	68	67		1.001	4.616	471
980	157.090	158.456		0.16	0.16	1.32	1.06	0.25	79	78	67	1.97	1.4	71	0.015	97	97	23.8	-0.03	0.54	15.5450487	101.73	164.18	159.39	61.70	163.43	92	68	68	67		1.001	4.500	458
981	157.250	158.618		0.16	0.16	1.33	1.07	0.25	79	78	67	1.95	1.4	71	0.012	108	109	23.8	0.01	0.57	15.5066481	101.14	163.93	159.17	61.93	163.07	92	68	68	67		1.001	4.708	477
982	157.410	158.779		0.16	0.16	1.33	1.07	0.25	79	78	67	1.96	1.4	71	0.015	97	97	23.7	0.12	0.58	15.4982786	101.33	163.72	158.94	61.53	162.86	92	68	68	67		1.001	4.862	493
983	157.570	158.942		0.16	0.16	1.32	1.07	0.25	79	78	67	1.96	1.4	71	0.013	104	105	23.9	-0.24	0.56	15.4600763	100.77	163.44	158.70	61.85	162.62	91	68	68	67		1.001	4.704	475
984	157.730	159.103		0.16	0.16	1.31	1.07	0.25	79	78	67	1.95	1.4	71	0.015	97	97	23.9	0.01	0.51	15.545084	100.59	163.21	158.51	61.83	162.42	91	68	68	67		1.001	4.216	425
985	157.890	159.264		0.16	0.16	1.31	1.07	0.25	79	78	67	1.97	1.5	72	0.014	100	100	23.8	0.13	0.56	15.4884624	100.43	163.00	158.23	61.72	162.15	117	68	68	67		1.001	4.702	473
986	158.049	159.426		0.16	0.16	1.32	1.07	0.25	79	79	67	1.95	1.4	74	0.014	100	101	23.7	0.08	0.55	15.4399347	100.16	162.82	158.11	61.80	161.95	140	68	68	67		1.001	4.542	455
987	158.209	159.588		0.16	0.16	1.32	1.07	0.25	79	79	67	1.97	1.4	72	0.014	100	100	23.8	-0.11	0.56	15.4685183	100.16	162.49	157.77	61.58	161.73	123	68	68	67		1.001	4.703	472
988	158.369	159.750		0.16	0.16	1.32	1.07	0.25	79	79	67	1.95	1.4	72	0.016	94	94	23.8	0.08	0.56	15.4608068	100.05	162.27	157.64	61.47	161.51	113	68	68	67		1.001	4.705	471
989	158.529	159.911		0.16	0.16	1.32	1.07	0.25	79	79	67	1.95	1.4	72	0.015	97	96	23.8	0.00	0.49	15.4506073	99.95	162.08	157.42	61.43	161.37	125	68	68	67		1.001	4.056	406
990	158.689	160.073		0.16	0.16	1.32	1.07	0.25	79	79	67	1.97	1.4	76	0.013	104	105	23.6	0.12	0.56	15.4580441	99.43	161.84	157.13	61.68	161.11	152	68	68	67		1.001	4.705	468
991	158.849	160.235		0.16	0.16	1.32	1.07	0.25	79	79	67	1.96	1.4	78	0.014	101	101	23.5	0.10	0.56	15.5165367	99.16	161.66	156.95	61.70	160.86	165	69	69	67		1.001	4.704	467
992	159.008	160.396		0.16	0.16	1.32	1.07	0.25	79	79	67	1.95	1.5	79	0.016	94	94	23.4	0.11	0.58	15.5269117	98.80	161.49	156.70	61.81	160.61	178	69	69	67		1.001	4.872	482
993	159.168	160.557		0.16	0.16	1.32	1.07	0.25	79	79	67	1.96	1.5	83	0.014	101	101	23.2	0.18	0.55	15.4398851	98.38	161.27	156.51	62.11	160.49	199	69	69	67		1.001	4.549	448
994	159.329	160.719		0.16	0.16	1.32	1.06	0.25	80	79	67	1.96	1.5	85	0.014	102	102	23.1	0.13	0.53	15.4979362	98.13	161.13	156.43	62.20	160.33	216	69	69	67		1.001	4.393	432
995	159.489	160.881		0.16	0.16	1.32	1.06	0.25	79	79	67	1.97	1.5	87	0.014	102	102	22.7	0.37	0.56	15.5068331	97.80	161.24	156.49	62.55	160.35	229	70	70	67		1.001	4.700	460
996	159.648	161.042		0.16	0.16	1.32	1.07	0.25	79	79	67	1.98	1.5	88	0.013	105	105	22.3	0.48	0.60	15.4901571	97.81	161.41	156.62	62.57	160.38	240	70	70	67		1.001	4.999	490
997	159.808	161.203		0.16	0.16	1.32	1.07	0.25	79	79	67	1.97	1.5	89	0.014	102	101	22.1	0.13	0.55	15.440239	98.22	161.68	156.88	62.39	160.61	251	70	70	67		1.001	4.617	454
998	159.967	161.365		0.16	0.16	1.31	1.07	0.25	80	79	67	1.98	1.5	91	0.015	98	99	21.9	0.27	0.56	15.5736275	98.54	162.13	157.35	62.50	161.04	264	70	70	67		1.001	4.696	463
999	160.126	161.527		0.16	0.16	1.31	1.07	0.25	79	79	67	1.97	1.5	93	0.014	102	102	21.5	0.31	0.52	15.4689665	99.63	162.72	157.85	62.00	161.63	276	71	71	67		1.001	4.372	436
1000	160.286	161.687		0.16	0.16	1.32	1.06	0.25	80	79	67	1.99	1.5	95	0.015	99	98	21.3	0.28	0.53	15.4685383	100.25	163.44	158.61	62.05	162.30	288	71	71	67		1.001	4.377	439
1001	160.445	161.848		0.16	0.16	1.32	1.07	0.25	80	79	67	1.98	1.5	96	0.015	98	99	21.0	0.25	0.53	15.5269632	101.24	164.18	159.45	61.86	163.10	298	71	71	67		1.001	4.376	444
1002	160.604	162.009		0.16	0.16	1.32	1.06	0.25	79	79	67	2	1.5	98	0.014	102	102	20.6	0.37	0.58	15.4783592	102.33	164.99	160.11	61.61	163.93	306	71	71	67		1.001	4.863	498
1003	160.763	162.170		0.16	0.16	1.31	1.06	0.25	79	79	67	1.99	1.5	99	0.015	99	99	20.1	0.50	0.55	15.5356483	103.10	165.77	160.94	61.57	164.67	313	72	72	67		1.001	4.540	469
1004	160.922	162.330		0.16	0.16	1.32	1.06	0.25	80	79	67	2	1.5	101	0.015	99	98	20.0	0.18	0.57	15.5745602	103.88	166.81	161.88	61.83	165.71	320	72	72	67		1.001	4.707	490
1005	161.082	162.491		0.16	0.16	1.31	1.06	0.25	80	79	67	2	1.5	102	0.014	103	103	19.6	0.34	0.57	15.4980259	104.49	167.85	162.77	62.14	166.63	324	72	72	67		1.001	4.711	493
1006	161.240	162.651		0.16	0.16	1.31	1.05	0.25	80	79	67	2	1.5	103	0.014	102	102	19.2	0.46	0.49	15.5215511	105.55	168.93	163.75	62.19	167.74	329	72	73	67		1.001	4.057	429
1007	161.399	162.811		0.16	0.16	1.30	1.06	0.25	80	79	68	2.01	1.5	104	0.013	106	106	18.9	0.30	0.55	15.5282841	106.35	169.94	164.66	62.30	168.65	336	73	73	68		1.001	4.542	484
1008	161.557	162.972		0.16	0.16	1.30	1.06	0.25	80	79	68	2	1.5	105	0.014	102	103	18.3	0.56	0.53	15.5522957	107.05	171.06	165.71	62.73	169.78	342	73	73	68		1.001	4.383	470
1009	161.715	163.132		0.16	0.16	1.30	1.05	0.25	80	79	67	2.01	1.5	106	0.015	98	99	18.0	0.28	0.56	15.5124283	108.04	172.37	166.90	62.83	170.87	346	73	73	67		1.001	4.702	509
1010	161.873	163.291		0.16	0.16	1.31	1.05	0.25	80	79	67	2.02	1.5	106	0.015	98	98	17.7	0.35	0.58	15.4279184	108.86	173.44	167.98	63.25	172.12	349	73	73	67		1.001	4.863	530
1011	162.031	163.452		0.16	0.16	1.30	1.05	0.25	80	79	67	2.02	1.5	106	0.014	102	103	17.4	0.26	0.59	15.523757	110.11	174.79	169.22	63.34	173.45	350	74	74	67		1.001	4.874	537
1012	162.190	163.612		0.16	0.16	1.30	1.05	0.25	80	79	67	2.03	1.5	107	0.016	96	96	16.9	0.48	0.56	15.4304724	111.57	175.90	170.37	63.03	174.60	351	74	74	67		1.001	4.704	525
1013	162.348	163.771		0.16	0.16	1.29	1.05	0.25	80	79	67	2.02	1.5	107	0.015	99	98	16.5	0.42	0.53	15.5161648	112.46	177.16	171.55	63.34	175.60	352	74	74	67		1.001	4.409	496
1014	162.506	163.931		0.16	0.16	1.29	1.05	0.25	80	79	67	2.04	1.5	108	0.014	102	102	16.2	0.33	0.53	15.4415436	114.65	178.42	172.97	62.39	177.04	354	74	74	67		1.001	4.398	505
1015	162.664	164.091		0.16	0.16	1.29	1.04	0.25	80	79	68	2.05	1.5	108	0.014	102	102	15.7	0.45	0.51	15.4345465	116.29	179.54	174.10	61.89	178.17	356	74	75	68		1.001	4.216	491
1016	162.821	164.250		0.16	0.16	1.30	1.05	0.25	80	79	68	2.04	1.5	109	0.014	102	102	15.4	0.39	0.54	15.4348307	118.09	180.83	175.30	61.40	179.49	357	74	75	68		1.001	4.497	532
1017	162.979	164.410		0.16	0.16	1.30	1.04	0.25	80	79	68	2.04	1.5	110	0.015	99	99	14.9	0.41	0.56	15.5739813	119.15	182.01	176.55	61.56	180.71	359	75	75	68		1.001	4.701	561
1018	163.137	164.569		0.16	0.16	1.29	1.04	0.25	80	79	68	2.04	1.5	110	0.014	102	102	14.7	0.26	0.53	15.4982309	120.24	183.19	177.51	61.71	181.96	360	75	75	68		1.001	4.384	528
1019	163.295	164.729		0.16	0.16	1.29	1.05	0.25	80	79	68	2.03	1.5	94	0.013	105	105	14.5	0.22	0.53	15.5268965	121.09	184.48	178.68	61.97	183.06	329	74	75	68		1.001	4.385	532
1020	163.453	164.889		0.16	0.16	1.28	1.04	0.25	80	79	68	2.04	1.5	86	0.014	100	100	14.3	0.11	0.56	15.5161285	122.05	185.18	179.46	61.91	183.96	302	74	74	68		1.001	4.702	575
1021	163.610	165.048		0.16	0.16	1.29	1.04	0.25	80	79	68	2.04	1.5	82	0.013	103	103	14.2	0.11	0.55	15.4458456	122.44	185.48	179.82	61.99	184.42	287	74	74	68		1.001	4.545	557
1022	163.768	165.208		0.16	0.16	1.29	1.04	0.25	80	79	67	2.04	1.5	80	0.014	100	100	14.0	0.27	0.55	15.5054245	122.72	185.69	179.99	62.00	184.72	275	73	74	67		1.001	4.542	556
1023	163.926	165.368		0.16	0.16	1.29	1.04	0.25	80	79	68	2.04	1.5	79	0.014	99	100	14.0	-0.04	0.56	15.4865321	122.73	185.88	180.11	62.14	184.86	265	73	73	68		1.001	4.701	578
1024	164.084	165.527		0.16	0.16	1.29	1.04	0.25	80	79	67	2.04	1.5	79	0.015	96	96	13.9	0.12	0.53	15.4982061	122.70	186.05	180.23	62.36	185.05	256	73	73	67		1.001	4.380	538

Elapsed Time	Particulate Sampling Data																	Fuel Weight, lb		Flow, gpm		Temperature Data, oF												
	Gas Meter Cubic Feet (1)	Gas Meter Cubic Feet (2)	Gas Meter Cubic Feet (amb)	Sample Rate, cfm (1)	Sample Rate, cfm (2)	Orifice dH (1)	Orifice dH (2)	Orifice dH (amb)	Meter oF (1)	Meter oF (2)	Meter oF (amb)	Meter Vac. In. Hg. (1)	Meter Vac. In. Hg. (2)	Dilution Tunnel Temp.	Dilution Tunnel dP	Pro. Rate (%) (1)	Pro. Rate (%) (2)	Scale Reading	Weight Change	Load Side Liquid Flow Rate	Boiler Side Liquid Flow Rate (optional)	Thermopile ΔT	Boiler to Heat Exch. Temp.	Heat Exch to Boiler Temp.	Inlet Load Temp.	Outlet Load Temp.	Stack	Filter (1)	Filter (2)	Ambient		Specific Heat of Inlet Water (BTU/lb-°F)	Mass Flow Rate of Inlet Water (lb/min)	Heat Output, Btu
1025	164.242	165.687		0.16	0.16	1.28	1.04	0.25	80	79	67	2.05	1.5	78	0.015	96	96	13.9	0.04	0.53	15.4979267	122.65	186.20	180.39	62.52	185.18	248	73	73	67		1.001	4.380	538
1026	164.400	165.847		0.16	0.16	1.28	1.04	0.25	80	79	68	2.03	1.5	78	0.015	96	96	13.8	0.06	0.55	15.3990955	122.24	186.22	180.41	62.89	185.14	241	72	73	68		1.001	4.543	556
1027	164.557	166.006		0.16	0.16	1.28	1.04	0.25	80	79	68	2.05	1.5	77	0.014	99	99	13.8	0.00	0.55	15.4886036	122.62	186.34	180.52	62.68	185.29	235	72	73	68		1.001	4.541	557
1028	164.715	166.166		0.16	0.16	1.29	1.04	0.25	80	79	68	2.03	1.5	77	0.014	99	100	13.6	0.17	0.53	15.4979763	122.51	186.28	180.54	62.78	185.29	230	72	73	68		1.001	4.383	538
1029	164.873	166.326		0.16	0.16	1.29	1.04	0.25	80	79	68	2.03	1.5	76	0.014	99	100	13.6	0.00	0.51	15.5553083	122.63	186.18	180.48	62.61	185.24	225	72	72	68		1.001	4.229	519
1030	165.031	166.486		0.16	0.16	1.29	1.04	0.25	80	79	67	2.04	1.5	76	0.014	99	100	13.5	0.09	0.55	15.4832268	122.76	186.15	180.42	62.48	185.24	220	72	72	67		1.001	4.547	559
1031	165.189	166.645		0.16	0.16	1.28	1.04	0.25	80	79	67	2.05	1.5	75	0.014	99	99	13.6	-0.05	0.58	15.4511843	122.64	186.13	180.40	62.45	185.10	217	72	72	67		1.001	4.791	588
1032	165.347	166.806		0.16	0.16	1.28	1.04	0.25	80	79	68	2.04	1.5	74	0.013	103	104	13.6	0.04	0.57	15.5545759	122.67	186.07	180.36	62.48	185.15	213	71	72	68		1.001	4.731	581
1033	165.505	166.965		0.16	0.16	1.28	1.04	0.25	80	79	67	2.04	1.5	74	0.014	99	99	13.5	0.09	0.53	15.4868011	122.52	186.03	180.31	62.52	185.04	209	71	72	67		1.001	4.380	537
1034	165.662	167.125		0.16	0.16	1.28	1.04	0.25	80	79	68	2.04	1.5	74	0.013	102	103	13.5	-0.04	0.55	15.526556	122.80	185.93	180.27	62.22	185.02	205	71	72	68		1.001	4.545	559
1035	165.820	167.285		0.16	0.16	1.29	1.04	0.25	80	79	67	2.03	1.5	74	0.015	96	96	13.5	0.01	0.53	15.4506588	122.77	185.88	180.19	62.20	184.97	202	71	71	67		1.001	4.381	539
1036	165.978	167.444		0.16	0.16	1.29	1.04	0.25	80	79	67	2.05	1.5	74	0.015	96	95	13.6	-0.06	0.56	15.4684324	122.67	185.83	180.10	62.13	184.80	198	71	71	67		1.001	4.702	578
1037	166.137	167.604		0.16	0.16	1.29	1.04	0.25	80	79	68	2.04	1.5	74	0.014	100	99	13.5	0.08	0.56	15.4503479	122.42	185.57	179.77	62.32	184.73	194	71	71	68		1.001	4.704	577
1038	166.294	167.764		0.16	0.16	1.29	1.04	0.25	80	79	68	2.04	1.5	74	0.013	102	103	13.5	-0.08	0.55	15.5071239	121.81	185.53	179.66	62.73	184.54	189	71	71	68		1.001	4.542	554
1039	166.452	167.924		0.16	0.16	1.28	1.04	0.25	80	79	68	2.03	1.5	74	0.013	103	103	13.6	-0.02	0.53	15.4782248	121.50	185.25	179.35	62.75	184.24	186	71	71	68		1.001	4.386	534
1040	166.610	168.083		0.16	0.16	1.28	1.04	0.25	80	79	68	2.04	1.5	73	0.013	103	102	13.5	0.09	0.53	15.4687252	120.59	185.00	179.10	63.37	183.96	183	71	71	68		1.001	4.385	529
1041	166.767	168.244		0.16	0.16	1.29	1.04	0.25	80	79	68	2.04	1.5	73	0.012	106	108	13.4	0.10	0.55	15.4424267	120.03	184.94	179.04	63.80	183.83	179	70	71	68		1.001	4.547	546
1042	166.925	168.403		0.16	0.16	1.29	1.04	0.25	80	79	68	2.04	1.5	73	0.014	99	99	13.4	-0.04	0.57	15.4217052	119.77	184.67	178.80	63.85	183.62	176	70	71	68		1.001	4.707	564
1043	167.084	168.563		0.16	0.16	1.29	1.04	0.25	80	79	68	2.05	1.5	73	0.015	96	96	13.6	-0.15	0.55	15.4983482	119.74	184.62	178.80	63.84	183.57	173	70	70	68		1.001	4.543	545
1044	167.242	168.723		0.16	0.16	1.28	1.04	0.25	80	79	68	2.04	1.5	73	0.013	103	103	13.5	0.05	0.53	15.401453	119.74	184.40	178.66	63.66	183.40	170	70	70	68		1.001	4.380	525
1045	167.400	168.883		0.16	0.16	1.28	1.04	0.25	80	79	68	2.05	1.5	73	0.014	99	99	13.5	0.02	0.56	15.4885406	120.56	184.24	178.53	62.66	183.23	167	70	70	68		1.001	4.705	568
1046	167.557	169.042		0.16	0.16	1.28	1.04	0.25	80	79	68	2.04	1.5	73	0.012	106	107	13.5	-0.01	0.51	15.4504833	120.94	184.15	178.59	62.33	183.27	165	70	70	68		1.001	4.227	512
1047	167.714	169.203		0.16	0.16	1.29	1.04	0.25	80	79	68	2.04	1.5	73	0.015	95	97	13.4	0.09	0.54	15.4503078	120.92	183.95	178.38	62.12	183.03	162	70	70	68		1.001	4.524	548
1048	167.873	169.362		0.16	0.16	1.29	1.04	0.25	80	79	68	2.03	1.5	73	0.014	99	99	13.5	-0.05	0.54	15.4803495	121.10	183.78	178.50	61.93	183.03	159	70	70	68		1.001	4.505	546
1049	168.031	169.522		0.16	0.16	1.29	1.04	0.25	80	79	67	2.03	1.5	73	0.015	96	96	13.5	-0.03	0.55	15.3449125	120.52	183.59	178.05	62.21	182.73	157	70	70	67		1.001	4.542	548
1050	168.189	169.682		0.16	0.16	1.27	1.04	0.25	80	79	68	2.04	1.5	73	0.015	96	96	13.5	0.02	0.54	15.5269136	120.07	183.36	177.75	62.33	182.40	155	70	70	68		1.001	4.459	536
1051	168.347	169.841		0.16	0.16	1.28	1.04	0.25	80	79	68	2.05	1.5	73	0.015	96	95	13.4	0.05	0.57	15.5162439	119.63	183.21	177.68	62.66	182.29	153	70	70	68		1.001	4.708	564
1052	168.504	170.001		0.16	0.16	1.29	1.04	0.25	80	79	68	2.04	1.5	73	0.014	98	99	13.6	-0.12	0.55	15.4599981	119.81	183.08	177.51	62.31	182.12	151	70	70	68		1.001	4.542	545
1053	168.662	170.162		0.16	0.16	1.29	1.04	0.25	80	79	68	2.04	1.5	73	0.013	103	104	13.4	0.13	0.56	15.4489145	119.66	182.90	177.36	62.31	181.97	149	70	70	68		1.001	4.705	564
1054	168.820	170.321		0.16	0.16	1.29	1.04	0.25	80	79	68	2.04	1.5	73	0.014	99	99	13.6	-0.15	0.51	15.5450592	119.54	182.69	177.13	62.24	181.78	147	69	70	68		1.001	4.218	505
1055	168.978	170.481		0.16	0.16	1.28	1.04	0.25	80	79	68	2.05	1.5	73	0.014	99	99	13.5	0.09	0.51	15.4884977	119.44	182.45	176.89	62.19	181.63	145	69	70	68		1.001	4.217	504
1056	169.137	170.641		0.16	0.16	1.29	1.04	0.25	80	79	68	2.03	1.5	73	0.013	103	103	13.6	-0.07	0.53	15.4671459	119.13	182.36	176.71	62.27	181.40	143	69	70	68		1.001	4.381	522
1057	169.294	170.801		0.16	0.16	1.28	1.04	0.25	80	79	68	2.03	1.5	73	0.014	98	99	13.6	-0.01	0.56	15.5140333	118.56	182.28	176.58	62.77	181.33	141	69	70	68		1.001	4.705	558
1058	169.452	170.961		0.16	0.16	1.29	1.04	0.25	80	79	68	2.05	1.5	73	0.013	103	103	13.6	0.00	0.53	15.4981632	118.01	182.02	176.34	63.07	181.08	139	69	70	68		1.001	4.379	517
1059	169.610	171.121		0.16	0.16	1.28	1.04	0.25	80	79	68	2.04	1.5	73	0.014	99	99	13.4	0.15	0.53	15.5062513	118.05	181.76	176.08	62.79	180.84	138	69	70	68		1.001	4.383	518
1060	169.767	171.281		0.16	0.16	1.29	1.04	0.25	80	79	68	2.05	1.5	73	0.015	95	96	13.6	-0.19	0.53	15.4905853	117.69	181.54	175.93	62.94	180.63	136	69	69	68		1.001	4.378	516
1061	169.925	171.440		0.16	0.16	1.29	1.04	0.25	80	79	68	2.02	1.5	80	0.014	100	99	13.6	-0.04	0.53	15.5153103	117.80	181.30	175.68	62.55	180.35	165	70	70	68		1.001	4.383	517
1062	170.084	171.601		0.16	0.16	1.30	1.05	0.25	80	79	68	2.02	1.5	83	0.014	100	101	13.2	0.40	0.55	15.6119375	117.73	181.09	175.60	62.49	180.22	187	70	70	68		1.001	4.544	536
1063	170.244	171.761		0.16	0.16	1.30	1.05	0.25	80	79	68	2.01	1.5	75	0.014	100	99	13.3	-0.04	0.55	15.5162773	118.02	180.96	175.49	62.06	180.08	168	70	70	68		1.001	4.543	537
1064	170.402	171.922		0.16	0.16	1.30	1.06	0.25	80	80	68	2	1.5	74	0.014	99	100	13.4	-0.12	0.52	15.5739832	117.78	180.70	175.14	62.12	179.90	157	70	70	68		1.001	4.316	509
1065	170.561	172.083		0.16	0.16	1.29	1.05	0.25	80	80	68	2.01	1.5	73	0.015	96	96	13.4	0.00	0.54	15.545105	117.34	180.50	174.96	62.28	179.62	149	69	70	68		1.001	4.508	530
1066	170.720	172.244		0.16	0.16	1.30	1.05	0.25	80	79	68	2	1.5	73	0.014	99	100	13.3	0.07	0.57	15.5553808	117.00	180.33	174.85	62.45	179.44	144	69	70	68		1.001	4.706	551
1067	170.879	172.404		0.16	0.16	1.29	1.06	0.25	80	80	68	2.01	1.5	73	0.014	99	99	13.3	0.05	0.53	15.5452013	117.09	180.12	174.69	62.23	179.32	140	69	70	68		1.001	4.384	514
1068	171.037	172.565		0.16	0.16	1.30	1.06	0.25	80	80	68	1.99	1.5	73	0.013	103	103	13.3	0.00	0.56	15.4403744	116.92	180.00	174.62	62.21	179.13	137	69	70	68		1.001	4.704	551
1069	171.196	172.726		0.16	0.16	1.31	1.05	0.25	80	80	68	1.99	1.5	73	0.014	99	100	13.4	-0.14	0.54	15.4979515	116.87	179.76	174.38	62.02	178.89	135	69	70	68		1.001	4.537	531
1070	171.355	172.887		0.16	0.16	1.30	1.05	0.25	80	80	68	1.99	1.5	73	0.015	96	96	13.3	0.09	0.47	15.526042	116.27	179.58	174.30	62.41	178.67	133	69	69	68		1.001	3.894	453
1071	171.515	173.048		0.16	0.16	1.30	1.05	0.25	80	80	68	1.99	1.5	73	0.015	97	96	13.3	-0.02	0.56	15.482069	115.99	179.39	173.84	62.56	178.54	131	69	69	68		1.001	4.703	546
1072	171.674	173.209		0.16	0.16	1.30	1.05	0.25	80	80	68	2.01	1.5	73	0.013	103	103	13.4	-0.01	0.54	15.392108	115.14	179.12	173.54	63.02	178.16	129	69	69	68		1.001	4.536	523
1073	171.833	173.369		0.16	0.16	1.30	1.05	0.25	80	80	68	1.99	1.5	73	0.014	99	99	13.4	-0.05	0.53	15.5265532	114.96	178.96	173.34	63.11	178.07	128	69	69	68		1.001	4.376	504
1074	171.992	173.530		0.16	0.16	1.30	1.06	0.25	80	80	68	2.01	1.5	73	0.015	96	96	13.3	0.10	0.53	15.516469	115.03	178.73	173.16	62.81	177.84	126	69	70	68		1.001	4.380	504
1075	172.150	173.691		0.16	0.16	1.30	1.06	0.25	80	80	68	2	1.5	74	0.016	93	93	13.3	0.03	0.56	15.440052	114.07	178.47	172.91	63.59	177.66	125	69	70	68		1.001	4.701	537
1076	172.309	173.852		0.16	0.16	1.30	1.05	0.25	80	80	68	1.99	1.5	74	0.013	103	104	13.3	-0.05	0.54	15.4399681	114.48	178.24	172.73	62.95	177.44	124	69	70	68		1.001	4.538	520
1077	172.468	174.013		0.16	0.16	1.30	1.05	0.25	80	80	68	2	1.5	73	0.014	99	100	13.4	-0.10	0.56	15.4782286	114.05	178.00	172.50	63.02	177.07	123	69	69	68		1.001	4.699	537
1078	172.627	174.173		0.16	0.16	1.31	1.06	0.25	80	80	68	2.01	1.5	73	0.013	103	103	13.4	0.06	0.56	15.5192795	114.18	177.75	172.32	62.76	176.94	121	69	69	68		1.001	4.698	537
1079	172.786	174.335		0.16	0.16	1.31	1.06	0.25	80	80	68	1.99	1.5	72	0.014	99	100	13.3	0.02	0.57	15.4999619	114.15	177.47	172.03	62.42	176.57	120	69	69	68		1.001	4.708	538
1080	172.946	174.495		0.16	0.16	1.31	1.05	0.25	80	80	68	2.01	1.5	72	0.015	97	96	13.3	0.01	0.55	15.4686899	114.17	177.30	171.82	62.30	176.47	119	69	69	68		1.001	4.539	519
1081	173.105	174.656		0.16	0.16	1.30	1.06	0.25	80	80	68	2	1.5	71	0.014	99	100	13.5	-0.12	0.52	15.4885588	114.26	177.06	171.74	61.95	176.22	118	69	69	68		1.001	4.332	496
1082	173.264	174.818		0.16	0.16	1.34	1.08	0.25	80	80	68	2.03	1.5	71	0.013	103	104	13.4	0.05	0.55	15.4502897	113.31	176.89	171.49	62.68	175.99	117	69	69	68		1.001	4.540	515
1083	173.426	174.981		0.16	0.16	1.34	1.07	0.25	80	80	68	2.04	1.5	71	0.014	101	101	13.4	0.04	0.56	15.4432764	113.68	176.74	171.30	62.14	175.82	116	69	69	68		1.001	4.670	531
1084	173.587	175.142		0.16	0.16	1.34	1.08	0.25	80	80	68	2.03	1.5	71	0.013	104	103	13.3	0.03	0.55	15.4684439	114.52	176.44	171.17	61.18	175.70	115	69	69	68		1.001	4.549	522
1085	173.749	175.305		0.16	0.16	1.34	1.08	0.25	80	80	68	2.03	1.5	71	0.015	98	97	13.3	0.03	0.51	15.498064	114.41	176.22	170.89	61.05	175.45	114	69	69	68		1.001	4.229	484

Elapsed Time	Particulate Sampling Data																	Fuel Weight, lb		Flow, gpm		Temperature Data, oF												
	Gas Meter Cubic Feet (1)	Gas Meter Cubic Feet (2)	Gas Meter Cubic Feet (amb)	Sample Rate, cfm (1)	Sample Rate, cfm (2)	Orifice dH (1)	Orifice dH (2)	Orifice dH (amb)	Meter oF (1)	Meter oF (2)	Meter oF (amb)	Meter Vac. In. Hg. (1)	Meter Vac. In. Hg. (2)	Dilution Tunnel Temp.	Dilution Tunnel dP	Pro. Rate (%) (1)	Pro. Rate (%) (2)	Scale Reading	Weight Change	Load Side Liquid Flow Rate	Boiler Side Liquid Flow Rate (optional)	Thermopile ΔT	Boiler to Heat Exch. Temp.	Heat Exch to Boiler Temp.	Inlet Load Temp.	Outlet Load Temp.	Stack	Filter (1)	Filter (2)	Ambient		Specific Heat of Inlet Water (BTU/lb-°F)	Mass Flow Rate of Inlet Water (lb/min)	Heat Output, Btu
1086	173.910	175.467		0.16	0.16	1.35	1.08	0.25	80	80	68	2.05	1.5	71	0.014	101	100	13.5	-0.15	0.57	15.5012121	114.19	175.99	170.63	60.92	175.11	113	69	69	68		1.001	4.713	539
1087	174.072	175.631		0.16	0.16	1.35	1.08	0.25	80	80	67	2.03	1.5	70	0.014	101	101	13.4	0.03	0.55	15.5269794	114.16	175.71	170.35	60.79	174.95	112	69	69	67		1.001	4.548	520
1088	174.234	175.793		0.16	0.16	1.35	1.07	0.25	80	80	67	2.03	1.5	70	0.013	105	104	13.2	0.20	0.57	15.5087299	114.23	175.60	170.28	60.60	174.83	111	69	69	67		1.001	4.713	539
1089	174.395	175.956		0.16	0.16	1.34	1.08	0.25	80	80	67	2.03	1.5	70	0.014	100	101	13.3	-0.05	0.55	15.4850979	114.03	175.20	169.93	60.38	174.42	110	69	69	67		1.001	4.554	520
1090	174.557	176.118		0.16	0.16	1.34	1.08	0.25	80	80	67	2.04	1.5	70	0.013	105	104	13.4	-0.11	0.57	15.4559546	113.82	174.95	169.63	60.32	174.14	109	69	69	67		1.001	4.715	537
1091	174.718	176.281		0.16	0.16	1.35	1.07	0.25	80	80	67	2.02	1.5	70	0.016	94	94	13.3	0.05	0.51	15.555295	113.74	174.73	169.37	60.14	173.88	108	69	69	67		1.001	4.231	482
1092	174.880	176.444		0.16	0.16	1.35	1.08	0.25	80	80	67	2.04	1.5	70	0.016	95	94	13.3	-0.01	0.55	15.4475222	113.61	174.54	169.19	60.04	173.65	108	68	69	67		1.001	4.553	518
1093	175.041	176.606		0.16	0.16	1.35	1.08	0.25	80	80	67	2.05	1.5	74	0.014	101	100	13.3	0.03	0.57	15.5451698	113.58	174.24	168.94	59.82	173.40	150	69	69	67		1.001	4.718	537
1094	175.203	176.768		0.16	0.16	1.35	1.08	0.25	80	80	67	2.03	1.5	73	0.014	101	100	13.3	0.03	0.55	15.4980736	113.45	173.89	168.55	59.65	173.10	150	68	69	67		1.001	4.555	517
1095	175.364	176.931		0.16	0.16	1.34	1.08	0.25	80	80	67	2.03	1.5	70	0.014	100	101	13.3	-0.05	0.55	15.4638824	113.33	173.74	168.40	59.55	172.88	135	68	68	67		1.001	4.551	516
1096	175.526	177.094		0.16	0.16	1.34	1.08	0.25	80	80	67	2.04	1.5	69	0.015	98	97	13.4	-0.10	0.53	15.3565722	113.29	173.45	168.11	59.36	172.65	126	68	68	67		1.001	4.392	498
1097	175.688	177.257		0.16	0.16	1.34	1.07	0.25	80	79	66	2.03	1.5	69	0.014	101	101	13.4	0.06	0.55	15.5937357	113.13	173.30	167.95	59.30	172.42	121	68	68	66		1.001	4.546	515
1098	175.849	177.419		0.16	0.16	1.35	1.08	0.25	80	79	66	2.02	1.5	69	0.013	104	104	13.5	-0.08	0.54	15.4685812	112.70	172.98	167.63	59.35	172.05	117	68	68	66		1.001	4.460	503
1099	176.011	177.582		0.16	0.16	1.35	1.08	0.25	80	79	66	2.02	1.5	69	0.014	101	101	13.3	0.16	0.53	15.4444056	112.29	172.72	167.38	59.50	171.79	115	68	68	66		1.001	4.395	494
1100	176.173	177.745		0.16	0.16	1.35	1.08	0.25	80	79	66	2.04	1.5	69	0.014	101	101	13.2	0.06	0.55	15.4020119	111.95	172.50	167.21	59.66	171.61	113	68	68	66		1.001	4.577	513
1101	176.334	177.908		0.16	0.16	1.35	1.08	0.25	80	79	67	2.04	1.5	70	0.014	100	101	13.3	-0.10	0.59	15.4782085	112.17	172.28	167.10	59.22	171.40	111	68	68	67		1.001	4.884	549
1102	176.496	178.070		0.16	0.16	1.34	1.08	0.25	80	79	67	2.03	1.5	70	0.016	95	94	13.3	-0.01	0.57	15.4779177	112.37	172.01	166.88	58.95	171.32	110	68	68	67		1.001	4.716	531
1103	176.658	178.233		0.16	0.16	1.35	1.08	0.25	80	79	66	2.04	1.5	69	0.014	101	101	13.2	0.10	0.53	15.4689512	112.17	171.82	166.74	58.97	171.14	109	68	68	66		1.001	4.395	494
1104	176.819	178.395		0.16	0.16	1.35	1.08	0.25	80	79	66	2.04	1.5	69	0.015	97	97	13.3	-0.04	0.53	15.5451832	111.83	171.52	166.37	58.98	170.80	108	68	68	66		1.001	4.396	492
1105	176.981	178.559		0.16	0.16	1.35	1.08	0.25	80	79	67	2.04	1.5	69	0.015	98	98	13.4	-0.11	0.55	15.61203	111.33	171.40	166.25	59.23	170.56	107	67	68	67		1.001	4.556	508
1106	177.145	178.724		0.16	0.16	1.35	1.08	0.25	80	79	66	2.02	1.5	69	0.014	102	102	13.4	0.01	0.57	15.4400206	111.02	171.09	165.93	59.27	170.30	106	68	68	66		1.001	4.711	524
1107	177.304	178.884		0.16	0.16	1.35	1.08	0.25	80	79	67	2.03	1.5	69	0.016	93	93	13.4	0.01	0.60	15.6217384	110.47	170.84	165.72	59.60	170.07	105	67	68	67		1.001	5.038	557
1108	177.466	179.046		0.16	0.16	1.35	1.08	0.25	80	79	66	2.04	1.5	69	0.014	101	100	13.2	0.14	0.55	15.5549116	110.03	170.55	165.42	59.77	169.81	104	67	68	66		1.001	4.556	502
1109	177.627	179.209		0.16	0.16	1.35	1.08	0.25	80	79	66	2.03	1.5	70	0.013	104	105	13.3	-0.07	0.57	15.4802055	109.57	170.32	165.31	60.04	169.61	104	67	68	66		1.001	4.717	517
1110	177.789	179.373		0.16	0.16	1.35	1.08	0.25	80	79	67	2.04	1.5	70	0.014	101	101	13.3	0.04	0.55	15.450634	109.42	170.18	165.06	59.90	169.32	103	67	68	67		1.001	4.555	499
1111	177.951	179.535		0.16	0.16	1.35	1.08	0.25	80	79	67	2.04	1.5	70	0.014	101	100	13.3	-0.08	0.55	15.4688454	108.91	169.94	164.88	60.16	169.07	102	67	68	67		1.001	4.555	497
1112	178.112	179.697		0.16	0.16	1.35	1.08	0.25	80	79	67	2.04	1.5	70	0.016	94	94	13.3	0.04	0.53	15.4504137	108.65	169.74	164.70	60.25	168.90	102	67	68	67		1.001	4.391	478
1113	178.274	179.860		0.16	0.16	1.35	1.09	0.25	80	79	67	2.02	1.5	70	0.015	98	97	13.3	0.00	0.59	15.5002823	108.62	169.36	164.36	60.00	168.62	101	67	68	67		1.001	4.878	530
1114	178.436	180.023		0.16	0.16	1.35	1.08	0.25	80	79	67	2.04	1.5	71	0.015	98	98	13.3	0.02	0.53	15.5160522	108.40	169.16	164.15	60.01	168.41	100	68	68	67		1.001	4.401	478
1115	178.597	180.186		0.16	0.16	1.35	1.08	0.25	80	79	67	2.02	1.5	71	0.014	101	101	13.3	-0.02	0.55	15.4812841	107.89	168.99	163.93	60.29	168.19	100	68	68	67		1.001	4.551	492
1116	178.759	180.348		0.16	0.16	1.35	1.08	0.25	80	79	67	2.02	1.5	71	0.013	105	104	13.4	-0.11	0.50	15.4782495	107.71	168.78	163.70	60.23	167.94	99	68	68	67		1.001	4.168	449
1117	178.921	180.511		0.16	0.16	1.35	1.08	0.25	80	79	67	2.04	1.5	71	0.017	92	92	13.3	0.08	0.53	15.4305143	107.10	168.47	163.42	60.64	167.73	98	68	68	67		1.001	4.388	470
1118	179.082	180.674		0.16	0.16	1.35	1.08	0.25	80	79	67	2.03	1.5	71	0.015	97	98	13.4	-0.08	0.57	15.5451231	106.07	168.26	163.09	61.31	167.38	98	68	68	67		1.001	4.710	500
1119	179.244	180.837		0.16	0.16	1.35	1.07	0.25	80	79	67	2.03	1.5	71	0.014	101	101	13.5	-0.08	0.55	15.4599619	105.14	167.93	162.77	61.89	167.04	97	68	68	67		1.001	4.545	478
1120	179.406	180.999		0.16	0.16	1.34	1.08	0.25	80	79	67	2.04	1.5	71	0.013	105	104	13.4	0.07	0.57	15.4305058	104.57	167.70	162.61	62.21	166.79	97	68	68	67		1.001	4.709	493
1121	179.567	181.162		0.16	0.16	1.35	1.08	0.25	80	79	67	2.02	1.5	71	0.014	101	101	13.4	0.02	0.57	15.5525074	104.37	167.53	162.46	62.24	166.62	96	68	68	67		1.001	4.709	492
1122	179.729	181.324		0.16	0.16	1.35	1.08	0.25	80	79	67	2.03	1.5	71	0.014	101	100	13.4	0.02	0.55	15.4759817	104.22	167.29	162.18	62.13	166.35	96	68	68	67		1.001	4.544	474
1123	179.891	181.487		0.16	0.16	1.35	1.08	0.25	80	79	67	2.04	1.5	71	0.015	98	98	13.4	-0.03	0.55	15.4680071	103.90	167.06	162.05	62.23	166.13	96	68	68	67		1.001	4.549	473
1124	180.052	181.650		0.16	0.16	1.35	1.07	0.25	80	79	67	2.04	1.5	73	0.014	101	101	13.3	0.09	0.53	15.4720678	103.79	166.82	161.82	62.08	165.87	118	68	68	67		1.001	4.383	455
1125	180.213	181.812		0.16	0.16	1.35	1.07	0.25	79	79	67	2.04	1.5	75	0.014	101	101	13.4	-0.06	0.49	15.531518	103.97	166.51	161.53	61.71	165.67	145	68	68	67		1.001	4.060	423
1126	180.375	181.974		0.16	0.16	1.34	1.08	0.25	79	79	67	2.03	1.5	73	0.013	105	104	13.4	-0.01	0.53	15.5247192	103.62	166.36	161.35	61.84	165.46	130	68	68	67		1.001	4.384	455
1127	180.536	182.137		0.16	0.16	1.35	1.08	0.25	79	79	67	2.04	1.5	72	0.013	105	105	13.4	0.01	0.55	15.4758644	103.71	166.08	161.10	61.49	165.20	118	68	68	67		1.001	4.543	472
1128	180.698	182.300		0.16	0.16	1.35	1.08	0.25	79	79	67	2.04	1.5	72	0.012	110	109	13.3	0.06	0.55	15.5738754	103.43	165.89	161.00	61.68	165.12	112	68	68	67		1.001	4.548	471
1129	180.859	182.462		0.16	0.16	1.35	1.08	0.25	79	79	67	2.04	1.5	72	0.014	101	100	13.3	0.05	0.56	15.4687366	103.08	165.65	160.85	61.74	164.82	108	68	68	67		1.001	4.705	486
1130	181.021	182.625		0.16	0.16	1.35	1.08	0.25	79	79	67	2.02	1.5	72	0.013	105	105	13.3	-0.08	0.55	15.4979334	102.95	165.39	160.55	61.62	164.57	105	68	68	67		1.001	4.547	469
1131	181.182	182.787		0.16	0.16	1.35	1.08	0.25	79	79	67	2.04	1.5	72	0.013	105	104	13.2	0.12	0.56	15.5451069	102.57	165.24	160.39	61.78	164.35	103	68	68	67		1.001	4.698	482
1132	181.344	182.950		0.16	0.16	1.35	1.08	0.25	79	79	67	2.03	1.5	72	0.015	98	98	13.4	-0.15	0.56	15.4818859	102.49	164.97	160.20	61.70	164.19	102	68	68	67		1.001	4.699	482
1133	181.505	183.113		0.16	0.16	1.35	1.08	0.25	79	79	67	2.04	1.5	72	0.014	101	101	13.3	0.09	0.55	15.5932779	102.44	164.72	159.91	61.57	164.02	101	68	68	67		1.001	4.585	470
1134	181.667	183.275		0.16	0.16	1.35	1.07	0.25	79	79	67	2.02	1.5	72	0.015	98	97	13.5	-0.18	0.56	15.4217796	102.23	164.55	159.75	61.55	163.78	100	68	68	67		1.001	4.667	478
1135	181.828	183.437		0.16	0.16	1.35	1.08	0.25	80	79	67	2.04	1.5	72	0.014	101	100	13.4	0.05	0.57	15.4684486	101.82	164.30	159.58	61.65	163.47	99	68	68	67		1.001	4.745	484
1136	181.990	183.600		0.16	0.16	1.35	1.08	0.25	80	79	67	2.03	1.5	72	0.014	101	101	13.2	0.20	0.55	15.495182	101.80	164.01	159.22	61.44	163.24	98	68	68	67		1.001	4.555	464
1137	182.151	183.763		0.16	0.16	1.35	1.08	0.25	80	79	68	2.02	1.5	72	0.014	101	101	13.1	0.11	0.56	15.5406723	101.65	163.74	158.93	61.34	162.99	97	68	68	68		1.001	4.706	479
1138	182.313	183.925		0.16	0.16	1.35	1.08	0.25	80	79	67	2.02	1.5	72	0.014	101	100	13.3	-0.21	0.57	15.498064	100.98	163.57	158.90	61.67	162.65	97	68	68	67		1.001	4.708	476
1139	182.474	184.087		0.16	0.16	1.35	1.08	0.25	79	79	68	2.03	1.5	72	0.015	97	97	13.4	-0.06	0.56	15.4780483	100.92	163.40	158.61	61.60	162.52	96	68	68	68		1.001	4.703	475
1140	182.636	184.250		0.16	0.16	1.35	1.08	0.25	79	79	68	2.04	1.5	72	0.015	98	98	13.3	0.08	0.53	15.5935555	100.99	163.17	158.40	61.32	162.31	95	68	68	68		1.001	4.377	443
1141	182.797	184.412		0.16	0.16	1.35	1.08	0.25	80	79	68	2.03	1.5	72	0.013	104	104	13.5	-0.22	0.56	15.5356083	100.77	162.93	158.17	61.33	162.10	95	68	68	68		1.001	4.706	475
1142	182.959	184.576		0.16	0.16	1.35	1.08	0.25	80	79	68	2.03	1.5	74	0.013	105	106	13.4	0.09	0.51	15.5210075	100.53	162.69	158.01	61.33	161.86	94	69	69	68		1.001	4.219	425
1143	183.120	184.738		0.16	0.16	1.35	1.07	0.25	80	79	68	2.02	1.5	73	0.014	101	101	13.3	0.10	0.53	15.4887733	100.47	162.49	157.80	61.18	161.65	94	69	69	68		1.001	4.381	441
1144	183.282	184.900		0.16	0.16	1.35	1.08	0.25	80	79	68	2.03	1.5	72	0.013	105	104	13.2	0.08	0.55	15.4979267	100.50	162.23	157.67	61.01	161.51	94	69	69	68		1.001	4.543	457
1145	183.444	185.063		0.16	0.16	1.35	1.07	0.25	80	79	68	2.02	1.5	72	0.014	101	101	13.3	-0.02	0.53	15.4304695	100.38	161.98	157.36	60.84	161.22	96	69	69	68		1.001	4.383	440
1146	183.605	185.225		0.16	0.16	1.34	1.07	0.25	80	79	68	2.04	1.5	75	0.015	98	97	13.1	0.11	0.55	15.5738888	100.18	161.68	157.05	60.74	160.92	139	69	69	68		1.001	4.548	456

Elapsed Time	Particulate Sampling Data																	Fuel Weight, lb		Flow, gpm		Temperature Data, oF												
	Gas Meter Cubic Feet (1)	Gas Meter Cubic Feet (2)	Gas Meter Cubic Feet (amb)	Sample Rate, cfm (1)	Sample Rate, cfm (2)	Orifice dH (1)	Orifice dH (2)	Orifice dH (amb)	Meter oF (1)	Meter oF (2)	Meter oF (amb)	Meter Vac. In. Hg. (1)	Meter Vac. In. Hg. (2)	Dilution Tunnel Temp.	Dilution Tunnel dP	Pro. Rate (%) (1)	Pro. Rate (%) (2)	Scale Reading	Weight Change	Load Side Liquid Flow Rate	Boiler Side Liquid Flow Rate (optional)	Thermopile ΔT	Boiler to Heat Exch. Temp.	Heat Exch to Boiler Temp.	Inlet Load Temp.	Outlet Load Temp.	Stack	Filter (1)	Filter (2)	Ambient		Specific Heat of Inlet Water (BTU/lb-°F)	Mass Flow Rate of Inlet Water (lb/min)	Heat Output, Btu
1147	183.766	185.388		0.16	0.16	1.35	1.08	0.25	80	79	68	2.03	1.5	77	0.013	105	105	13.2	-0.03	0.51	15.5175686	99.90	161.51	156.98	60.82	160.72	155	69	69	68		1.001	4.220	422
1148	183.928	185.550		0.16	0.16	1.35	1.08	0.25	80	79	68	2.04	1.5	78	0.016	95	94	13.1	0.07	0.54	15.5160971	99.79	161.35	156.68	60.76	160.55	164	69	69	68		1.001	4.540	454
1149	184.089	185.712		0.16	0.16	1.34	1.08	0.25	80	79	68	2.05	1.5	78	0.014	101	101	13.0	0.15	0.55	15.4507828	99.93	161.08	156.42	60.50	160.43	172	69	69	68		1.001	4.544	455
1150	184.251	185.875		0.16	0.16	1.35	1.08	0.25	80	79	68	2.03	1.5	79	0.015	98	98	13.0	-0.02	0.88	15.4983282	100.44	160.56	154.24	59.60	160.04	181	69	69	68		1.001	7.300	734
1151	184.412	186.038		0.16	0.16	1.34	1.08	0.25	80	79	67	2.03	1.5	82	0.015	98	99	12.7	0.28	0.78	15.4683828	100.72	159.83	154.88	59.00	159.72	197	69	69	67		1.001	6.493	655
1152	184.573	186.199		0.16	0.16	1.35	1.07	0.25	80	79	67	2.03	1.5	84	0.015	98	98	12.5	0.15	0.80	15.5070019	100.76	159.63	154.86	58.66	159.42	210	70	70	67		1.001	6.655	671
1153	184.734	186.361		0.16	0.16	1.34	1.08	0.25	80	79	67	2.04	1.5	86	0.015	99	98	12.1	0.40	0.84	15.5068598	101.05	159.67	154.73	58.40	159.45	221	70	70	67		1.001	6.976	706
1154	184.895	186.524		0.16	0.16	1.34	1.08	0.25	80	79	67	2.06	1.5	87	0.016	95	96	12.1	0.06	0.86	15.4685593	101.31	159.72	155.20	58.09	159.40	230	70	70	67		1.001	7.142	724
1155	185.057	186.687		0.16	0.16	1.34	1.08	0.25	80	79	67	2.05	1.5	88	0.014	103	103	11.8	0.26	0.53	15.501997	101.86	160.34	157.55	57.95	159.81	238	70	70	67		1.001	4.388	447
1156	185.218	186.849		0.16	0.16	1.34	1.07	0.25	80	79	67	2.05	1.5	89	0.016	96	95	11.6	0.22	0.55	15.5772171	102.64	161.03	158.27	57.91	160.55	244	70	70	67		1.001	4.548	467
1157	185.379	187.010		0.16	0.16	1.34	1.07	0.25	80	79	67	2.05	1.5	89	0.014	102	101	11.3	0.28	0.57	15.5174513	103.27	161.67	158.90	57.87	161.14	250	71	71	67		1.001	4.716	488
1158	185.539	187.172		0.16	0.16	1.33	1.08	0.25	80	79	67	2.07	1.5	90	0.015	98	99	11.1	0.25	0.51	15.5675201	103.89	162.29	159.61	57.82	161.71	254	71	71	67		1.001	4.225	439
1159	185.700	187.335		0.16	0.16	1.34	1.08	0.25	80	79	67	2.06	1.5	91	0.016	96	96	10.8	0.23	0.57	15.4780416	104.40	162.86	160.29	57.78	162.19	258	71	71	67		1.001	4.715	493
1160	185.861	187.496		0.16	0.16	1.34	1.07	0.25	80	79	67	2.07	1.5	92	0.013	106	106	10.6	0.27	0.47	15.5527554	105.14	163.61	160.66	57.77	162.91	270	71	71	67		1.001	3.909	412
1161	186.021	187.658		0.16	0.16	1.34	1.08	0.25	80	79	67	2.07	1.5	93	0.014	102	102	10.3	0.24	0.82	15.5725708	106.29	164.27	159.68	57.53	163.82	281	71	71	67		1.001	6.820	726
1162	186.182	187.819		0.16	0.16	1.34	1.08	0.25	80	79	67	2.06	1.5	94	0.014	103	102	10.0	0.35	0.84	15.4979925	106.56	164.36	159.58	57.49	164.05	286	71	71	67		1.001	6.978	744
1163	186.343	187.982		0.16	0.16	1.34	1.07	0.25	80	79	66	2.08	1.5	95	0.015	99	100	9.7	0.31	0.76	15.4124613	107.18	164.93	160.85	57.43	164.60	290	71	72	66		1.001	6.330	679
1164	186.503	188.143		0.16	0.16	1.34	1.07	0.25	80	79	66	2.08	1.5	96	0.014	102	102	9.5	0.22	0.72	15.4780188	108.02	165.48	161.38	57.14	165.16	294	71	72	66		1.001	6.029	652
1165	186.663	188.304		0.16	0.16	1.34	1.07	0.25	80	79	66	2.08	1.5	97	0.013	106	106	9.1	0.33	0.72	15.5162573	108.70	166.16	161.97	57.03	165.72	297	72	72	66		1.001	6.009	654
1166	186.824	188.466		0.16	0.16	1.34	1.07	0.25	80	79	67	2.07	1.5	97	0.014	103	103	8.8	0.30	0.77	15.4812508	109.61	166.98	162.72	56.94	166.54	298	72	72	67		1.001	6.411	703
1167	186.984	188.628		0.16	0.16	1.34	1.07	0.25	80	79	66	2.09	1.5	98	0.012	111	111	8.6	0.24	0.70	15.4778929	110.62	167.94	164.04	56.84	167.46	299	72	72	66		1.001	5.847	648
1168	187.145	188.789		0.16	0.16	1.33	1.07	0.25	80	79	66	2.08	1.5	98	0.014	103	102	8.2	0.38	0.64	15.5736456	111.82	169.09	165.30	56.72	168.54	299	72	72	66		1.001	5.373	601
1169	187.305	188.950		0.16	0.16	1.34	1.07	0.25	80	79	66	2.09	1.5	98	0.012	111	110	7.9	0.33	0.70	15.5414019	112.86	170.05	166.23	56.62	169.48	299	72	72	66		1.001	5.844	660
1170	187.465	189.112		0.16	0.16	1.33	1.07	0.25	80	79	66	2.09	1.5	98	0.014	102	103	7.6	0.28	0.66	15.5662947	113.90	170.90	167.14	56.53	170.44	300	72	72	66		1.001	5.525	630
1171	187.626	189.274		0.16	0.16	1.34	1.07	0.25	80	79	66	2.09	1.5	98	0.013	107	107	7.3	0.26	0.68	15.5162973	114.79	171.79	168.05	56.42	171.20	302	72	72	66		1.001	5.684	653
1172	187.786	189.435		0.16	0.16	1.33	1.07	0.25	79	79	66	2.09	1.5	99	0.013	107	106	7.1	0.20	0.70	15.506752	115.81	172.60	168.76	56.31	172.12	302	72	73	66		1.001	5.848	678
1173	187.947	189.596		0.16	0.16	1.33	1.06	0.25	80	79	66	2.09	1.5	99	0.014	103	102	6.8	0.32	0.72	15.4216604	116.92	173.39	169.33	56.14	173.06	302	72	73	66		1.001	6.011	704
1174	188.107	189.758		0.16	0.16	1.33	1.07	0.25	79	79	66	2.1	1.5	99	0.015	99	99	6.7	0.08	0.70	15.5155296	117.79	174.13	170.04	55.98	173.77	304	72	73	66		1.001	5.846	689
1175	188.267	189.919		0.16	0.16	1.33	1.06	0.25	79	79	66	2.1	1.5	99	0.013	107	106	6.2	0.55	0.55	15.4685926	118.39	174.84	171.57	55.90	174.30	306	72	73	66		1.001	4.553	540
1176	188.427	190.080		0.16	0.16	1.33	1.06	0.25	79	79	66	2.1	1.5	100	0.013	107	106	6.0	0.17	0.59	15.3832922	119.43	175.85	171.95	55.81	175.24	307	72	73	66		1.001	4.880	584
1177	188.587	190.241		0.16	0.16	1.33	1.07	0.25	79	79	66	2.1	1.5	100	0.014	103	102	5.8	0.22	0.62	15.4961643	120.38	176.80	172.84	55.80	176.19	308	72	73	66		1.001	5.201	627
1178	188.747	190.403		0.16	0.16	1.32	1.06	0.25	79	79	66	2.09	1.5	100	0.014	103	103	5.5	0.30	0.59	15.4650745	121.28	177.68	173.69	55.76	177.03	309	73	73	66		1.001	4.877	592
1179	188.906	190.564		0.16	0.16	1.32	1.06	0.25	79	79	66	2.09	1.5	100	0.013	106	106	5.3	0.24	0.64	15.4685497	122.19	178.69	174.79	55.75	177.94	308	72	73	66		1.001	5.348	654
1180	189.066	190.724		0.16	0.16	1.32	1.07	0.25	79	79	66	2.1	1.5	100	0.012	111	110	4.9	0.41	0.59	15.4979744	123.14	179.63	175.71	55.70	178.84	308	73	73	66		1.001	4.901	604
1181	189.226	190.886		0.16	0.16	1.32	1.07	0.25	79	79	66	2.11	1.5	100	0.013	107	107	4.6	0.21	0.64	15.50844	124.06	180.39	176.37	55.71	179.77	308	73	73	66		1.001	5.356	665
1182	189.386	191.047		0.16	0.16	1.33	1.06	0.25	79	79	66	2.09	1.5	100	0.014	103	102	4.4	0.29	0.62	15.4488182	124.80	181.08	177.03	55.68	180.48	308	73	73	66		1.001	5.203	650
1183	189.546	191.208		0.16	0.16	1.33	1.07	0.25	79	79	66	2.09	1.5	100	0.012	111	111	4.2	0.20	0.58	15.4214172	125.58	181.92	177.90	55.69	181.27	308	73	73	66		1.001	4.871	612
1184	189.705	191.369		0.16	0.16	1.33	1.07	0.25	79	79	66	2.09	1.5	91	0.014	101	102	4.1	0.06	0.62	15.5067806	126.32	182.68	178.67	55.75	182.07	295	72	73	66		1.001	5.198	657
1185	189.865	191.531		0.16	0.16	1.33	1.07	0.25	79	79	66	2.08	1.5	81	0.013	105	105	3.9	0.17	0.60	15.4781342	126.66	182.91	178.99	55.83	182.49	271	72	72	66		1.001	5.035	639
1186	190.026	191.693		0.16	0.16	1.33	1.06	0.25	79	79	66	2.1	1.5	78	0.015	98	98	3.8	0.18	0.62	15.4687119	126.70	183.01	179.10	55.90	182.61	258	71	72	66		1.001	5.201	660
1187	190.186	191.854		0.16	0.16	1.32	1.06	0.25	79	78	66	2.1	1.5	76	0.012	109	108	3.7	0.08	0.60	15.4308052	126.60	183.05	179.11	56.00	182.59	249	71	72	66		1.001	5.037	638
1188	190.346	192.015		0.16	0.16	1.32	1.06	0.25	79	78	66	2.1	1.5	75	0.013	104	104	3.7	-0.02	0.61	15.4227562	126.49	182.98	179.05	56.09	182.58	241	71	71	66		1.001	5.044	639
1189	190.506	192.177		0.16	0.16	1.32	1.06	0.25	79	78	66	2.1	1.5	75	0.015	97	97	3.5	0.20	0.62	15.4598646	126.37	182.95	179.00	56.19	182.55	234	70	71	66		1.001	5.201	658
1190	190.666	192.338		0.16	0.16	1.31	1.06	0.25	79	78	66	2.09	1.5	74	0.012	108	108	3.7	-0.16	0.60	15.5067902	126.16	182.82	178.91	56.26	182.41	227	70	71	66		1.001	5.036	636
1191	190.826	192.499		0.16	0.16	1.32	1.06	0.25	79	78	66	2.08	1.5	73	0.013	104	104	3.6	0.07	0.60	15.5269547	126.08	182.81	178.83	56.34	182.41	222	70	71	66		1.001	5.038	636
1192	190.985	192.661		0.16	0.16	1.32	1.07	0.25	79	78	66	2.09	1.5	73	0.015	96	97	3.6	-0.02	0.66	15.4014959	125.88	182.66	178.67	56.41	182.28	217	70	70	66		1.001	5.505	694
1193	191.145	192.822		0.16	0.16	1.32	1.06	0.25	79	78	66	2.11	1.5	73	0.014	100	100	3.6	0.00	0.59	15.5005617	125.74	182.61	178.76	56.47	182.20	213	70	70	66		1.001	4.902	617
1194	191.305	192.983		0.16	0.16	1.32	1.06	0.25	79	78	66	2.09	1.5	73	0.014	100	100	3.6	0.04	0.63	15.5355043	125.54	182.36	178.43	56.50	182.04	208	69	70	66		1.001	5.262	661
1195	191.464	193.145		0.16	0.16	1.32	1.06	0.25	79	78	65	2.09	1.5	72	0.013	103	104	3.6	-0.08	0.62	15.5451651	125.49	182.36	178.46	56.50	181.99	205	69	70	65		1.001	5.155	648
1196	191.624	193.307		0.16	0.16	1.32	1.06	0.25	79	78	66	2.09	1.5	72	0.014	100	101	3.7	-0.10	0.62	15.3453131	125.18	182.10	178.17	56.52	181.69	201	69	70	66		1.001	5.206	652
1197	191.784	193.468		0.16	0.16	1.32	1.06	0.25	79	78	65	2.09	1.5	71	0.013	104	104	3.6	0.15	0.66	15.4719591	124.99	181.92	178.06	56.52	181.51	196	69	69	65		1.001	5.523	691
1198	191.944	193.629		0.16	0.16	1.32	1.06	0.25	79	78	65	2.1	1.5	70	0.014	100	100	3.6	-0.05	0.60	15.4782419	124.89	181.71	177.88	56.52	181.41	192	69	69	65		1.001	5.041	630
1199	192.104	193.790		0.16	0.16	1.33	1.07	0.25	79	78	66	2.09	1.5	70	0.014	100	100	3.6	0.00	0.62	15.4782267	124.61	181.48	177.62	56.47	181.08	188	69	69	66		1.001	5.203	649
1200	192.264	193.953		0.16	0.16	1.33	1.06	0.25	79	78	65	2.1	1.5	70	0.014	100	101	3.6	0.01	0.62	15.4506302	124.37	181.15	177.24	56.44	180.81	184	68	69	65		1.001	5.201	648
1201	192.424	194.113		0.16	0.16	1.32	1.06	0.25	79	78	66	2.1	1.5	70	0.015	97	96	3.6	0.01	0.62	15.4943638	124.09	180.85	177.00	56.44	180.53	181	68	69	66		1.001	5.205	647
1202	192.585	194.275		0.16	0.16	1.31	1.07	0.25	79	78	65	2.09	1.5	70	0.015	97	97	3.6	-0.02	0.59	15.5283747	123.81	180.57	176.79	56.48	180.30	177	68	69	65		1.001	4.888	606
1203	192.744	194.436		0.16	0.16	1.32	1.07	0.25	79	78	66	2.09	1.5	70	0.013	103	104	3.6	0.07	0.62	15.5543308	123.58	180.35	176.53	56.49	180.07	174	68	68	66		1.001	5.204	644
1204	192.904	194.598		0.16	0.16	1.31	1.06	0.25	79	78	66	2.09	1.5	70	0.014	100	100	3.7	-0.16	0.61	15.4506187	123.41	180.16	176.42	56.53	179.95	171	68	68	66		1.001	5.046	623
1205	193.064	194.759		0.16	0.16	1.32	1.06	0.25	79	78	66	2.08	1.5	70	0.014	100	100	3.7	0.00	0.64	15.5067635	123.11	179.97	176.20	56.58	179.69	168	68	68	66		1.001	5.359	661
1206	193.223	194.920		0.16	0.16	1.32	1.07	0.25	79	78	66	2.1	1.5	69	0.014	99	100	3.7	0.00	0.62	15.4121685	122.75	179.73	176.02	56.62	179.37	165	68	68	66		1.001	5.198	639
1207	193.383	195.082		0.16	0.16	1.32	1.07	0.25	79	78	66	2.09	1.5	70	0.014	100	100	3.7	-0.02	0.59	15.3920202	122.51	179.54	176.03	56.65	179.16	163	68	68	66		1.001	4.878	598

Elapsed Time	Particulate Sampling Data																	Fuel Weight, lb		Flow, gpm		Temperature Data, oF												
	Gas Meter Cubic Feet (1)	Gas Meter Cubic Feet (2)	Gas Meter Cubic Feet (amb)	Sample Rate, cfm (1)	Sample Rate, cfm (2)	Orifice dH (1)	Orifice dH (2)	Orifice dH (amb)	Meter oF (1)	Meter oF (2)	Meter oF (amb)	Meter Vac. In. Hg. (1)	Meter Vac. In. Hg. (2)	Dilution Tunnel Temp.	Dilution Tunnel dP	Pro. Rate (%) (1)	Pro. Rate (%) (2)	Scale Reading	Weight Change	Load Side Liquid Flow Rate	Boiler Side Liquid Flow Rate (optional)	Thermopile ΔT	Boiler to Heat Exch. Temp.	Heat Exch to Boiler Temp.	Inlet Load Temp.	Outlet Load Temp.	Stack	Filter (1)	Filter (2)	Ambient		Specific Heat of Inlet Water (BTU/lb-°F)	Mass Flow Rate of Inlet Water (lb/min)	Heat Output, Btu
1208	193.543	195.244		0.16	0.16	1.32	1.06	0.25	79	78	66	2.09	1.5	69	0.014	100	100	3.6	0.10	0.55	15.5652037	122.38	179.41	175.79	56.68	179.05	160	67	68	66		1.001	4.551	558
1209	193.703	195.405		0.16	0.16	1.33	1.07	0.25	79	78	66	2.1	1.5	70	0.014	100	100	3.6	0.06	0.64	15.4397478	122.05	179.12	175.59	56.71	178.76	157	67	68	66		1.001	5.325	651
1210	193.863	195.567		0.16	0.16	1.33	1.06	0.25	79	78	66	2.08	1.5	69	0.014	100	100	3.8	-0.24	0.62	15.4304152	121.69	178.76	175.07	56.81	178.50	155	67	68	66		1.001	5.198	633
1211	194.023	195.729		0.16	0.16	1.32	1.07	0.25	79	78	66	2.1	1.5	70	0.015	97	97	3.8	0.08	0.59	15.4014874	121.32	178.51	174.85	56.96	178.28	153	67	68	66		1.001	4.917	597
1212	194.182	195.890		0.16	0.16	1.32	1.06	0.25	79	78	66	2.08	1.5	70	0.015	96	96	3.8	-0.03	0.61	15.4687328	120.91	178.36	174.73	57.10	178.02	150	67	68	66		1.001	5.044	611
1213	194.342	196.051		0.16	0.16	1.32	1.06	0.25	79	78	66	2.09	1.5	70	0.014	100	100	3.6	0.14	0.62	15.5069904	120.57	178.09	174.48	57.23	177.80	148	67	68	66		1.001	5.206	628
1214	194.503	196.212		0.16	0.16	1.32	1.06	0.25	79	78	66	2.09	1.5	70	0.013	104	104	3.8	-0.14	0.59	15.5648432	120.23	177.93	174.25	57.40	177.63	146	67	68	66		1.001	4.878	587
1215	194.663	196.375		0.16	0.16	1.32	1.06	0.25	79	78	66	2.09	1.5	70	0.014	100	101	3.9	-0.10	0.61	15.5161171	119.73	177.60	173.97	57.56	177.28	144	67	68	66		1.001	5.042	604
1216	194.823	196.536		0.16	0.16	1.32	1.06	0.25	79	78	66	2.09	1.5	70	0.014	100	100	3.7	0.13	0.62	15.5451231	119.33	177.39	173.83	57.71	177.05	142	67	68	66		1.001	5.202	622
1217	194.983	196.696		0.16	0.16	1.32	1.07	0.25	79	78	66	2.1	1.5	71	0.015	97	96	3.7	-0.01	0.62	15.5070066	118.98	177.25	173.68	57.88	176.86	140	67	68	66		1.001	5.199	619
1218	195.142	196.858		0.16	0.16	1.31	1.06	0.25	79	78	66	2.1	1.5	71	0.015	96	97	3.9	-0.19	0.62	15.4688225	118.68	176.97	173.46	58.07	176.74	138	67	68	66		1.001	5.202	618
1219	195.302	197.020		0.16	0.16	1.31	1.06	0.25	79	78	66	2.09	1.5	71	0.013	104	104	3.7	0.27	0.60	15.5269184	118.32	176.88	173.36	58.22	176.54	137	67	68	66		1.001	5.032	596
1220	195.462	197.181		0.16	0.16	1.32	1.06	0.25	79	78	66	2.08	1.5	71	0.014	100	100	3.8	-0.16	0.62	15.4304247	117.87	176.52	172.97	58.39	176.27	135	67	68	66		1.001	5.198	613
1221	195.622	197.342		0.16	0.16	1.31	1.07	0.25	79	78	66	2.1	1.5	72	0.014	100	100	3.7	0.11	0.60	15.5450735	117.34	176.18	172.66	58.58	175.92	133	67	68	66		1.001	5.031	591
1222	195.782	197.504		0.16	0.16	1.32	1.07	0.25	79	78	69	2.08	1.5	74	0.015	97	97	3.8	-0.08	0.55	15.4299536	116.90	175.89	172.44	58.74	175.64	131	68	68	69		1.001	4.558	533
1223	195.941	197.666		0.16	0.16	1.33	1.06	0.25	79	78	67	2.08	1.5	72	0.014	100	101	3.7	0.06	0.62	15.555275	116.52	175.63	172.17	58.84	175.36	130	68	68	67		1.001	5.207	607
1224	196.101	197.827		0.16	0.16	1.33	1.07	0.25	79	78	67	2.08	1.5	71	0.014	100	100	3.8	-0.06	0.55	15.421607	116.27	175.50	172.22	58.85	175.13	128	68	68	67		1.001	4.553	530
1225	196.261	197.988		0.16	0.16	1.33	1.07	0.25	79	78	67	2.08	1.5	71	0.013	104	104	3.7	0.05	0.60	15.5935755	116.20	175.26	171.76	58.79	174.99	127	68	68	67		1.001	5.015	583
1226	196.421	198.150		0.16	0.16	1.32	1.06	0.25	79	78	67	2.09	1.5	72	0.014	100	101	3.8	-0.03	0.57	15.6032324	116.08	175.04	171.53	58.51	174.60	142	68	68	67		1.001	4.716	548
1227	196.581	198.311		0.16	0.16	1.32	1.06	0.25	79	78	67	2.1	1.5	79	0.014	101	101	3.7	0.05	0.60	15.555232	116.05	174.65	171.16	58.33	174.38	172	68	68	67		1.001	5.038	585
1228	196.741	198.472		0.16	0.16	1.32	1.06	0.25	79	78	67	2.09	1.5	74	0.013	104	104	3.8	-0.05	0.60	15.5355272	115.88	174.29	170.75	58.14	174.02	161	68	68	67		1.001	5.040	585
1229	196.901	198.633		0.16	0.16	1.33	1.06	0.25	79	78	67	2.08	1.5	71	0.015	97	97	3.8	0.00	0.60	15.4889193	115.74	174.09	170.54	58.02	173.76	148	68	68	67		1.001	5.037	584
1230	197.061	198.795		0.16	0.16	1.33	1.06	0.25	79	78	67	2.08	1.5	71	0.014	100	101	3.7	0.04	0.62	15.5636511	115.72	173.98	170.61	57.93	173.66	140	68	68	67		1.001	5.192	602
1231	197.221	198.956		0.16	0.16	1.33	1.06	0.25	79	78	66	2.08	1.5	70	0.015	97	96	3.8	-0.03	0.60	15.5356197	115.81	173.73	170.24	57.74	173.55	135	68	68	66		1.001	5.036	584
1232	197.381	199.117		0.16	0.16	1.32	1.07	0.25	79	78	66	2.09	1.5	70	0.015	97	96	3.8	-0.04	0.59	15.4304399	115.43	173.34	169.88	57.62	173.05	132	68	68	66		1.001	4.876	564
1233	197.541	199.279		0.16	0.16	1.31	1.07	0.25	79	78	66	2.1	1.5	70	0.014	100	100	3.8	-0.03	0.62	15.4121218	115.37	173.05	169.59	57.49	172.85	129	68	68	66		1.001	5.199	600
1234	197.700	199.441		0.16	0.16	1.32	1.06	0.25	79	78	66	2.08	1.5	70	0.013	103	104	3.7	0.10	0.66	15.3543501	115.15	172.88	169.34	57.41	172.56	127	68	68	66		1.001	5.529	637
1235	197.860	199.602		0.16	0.16	1.32	1.06	0.25	79	78	66	2.08	1.5	70	0.014	100	100	3.8	-0.06	0.62	15.4885254	114.97	172.57	169.12	57.35	172.33	125	68	68	66		1.001	5.206	599
1236	198.020	199.763		0.16	0.16	1.32	1.06	0.25	79	78	66	2.09	1.5	70	0.014	100	100	3.9	-0.09	0.60	15.4598312	114.72	172.23	168.80	57.24	171.97	123	68	68	66		1.001	5.042	579
1237	198.180	199.925		0.16	0.16	1.32	1.07	0.25	79	78	66	2.09	1.5	69	0.015	97	97	3.9	0.02	0.59	15.4683895	114.71	172.12	168.66	57.14	171.85	122	68	68	66		1.001	4.882	561
1238	198.340	200.086		0.16	0.16	1.32	1.06	0.25	79	78	66	2.09	1.5	69	0.015	97	96	3.9	-0.03	0.62	15.5140915	114.40	171.76	168.34	57.06	171.46	120	67	68	66		1.001	5.189	594
1239	198.500	200.248		0.16	0.16	1.33	1.06	0.25	79	78	66	2.09	1.5	69	0.015	97	97	3.9	0.01	0.59	15.4780931	114.20	171.57	168.33	57.04	171.24	119	67	68	66		1.001	4.937	565
1240	198.660	200.409		0.16	0.16	1.32	1.06	0.25	79	78	66	2.09	1.5	69	0.012	108	108	3.9	-0.02	0.63	15.4979334	114.04	171.23	167.78	57.00	171.04	117	67	67	66		1.001	5.265	601
1241	198.820	200.571		0.16	0.16	1.33	1.06	0.25	79	78	66	2.09	1.5	69	0.014	100	100	3.8	0.08	0.64	15.4831753	113.87	171.07	167.64	56.92	170.79	116	67	67	66		1.001	5.370	612
1242	198.980	200.732		0.16	0.16	1.32	1.06	0.25	79	78	66	2.09	1.5	69	0.015	97	96	3.8	0.04	0.57	15.5157976	113.57	170.70	167.25	56.89	170.47	115	67	67	66		1.001	4.761	541
1243	199.141	200.893		0.16	0.16	1.31	1.07	0.25	79	78	66	2.08	1.5	69	0.012	109	108	3.9	-0.07	0.63	15.5268784	113.28	170.44	167.00	56.91	170.19	114	67	67	66		1.001	5.210	591
1244	199.301	201.055		0.16	0.16	1.32	1.07	0.25	79	78	66	2.08	1.5	69	0.014	100	100	3.8	0.02	0.62	15.5356016	112.99	170.19	166.67	56.92	169.91	113	67	67	66		1.001	5.209	589
1245	199.461	201.217		0.16	0.16	1.32	1.07	0.25	79	78	66	2.1	1.5	69	0.013	104	104	3.7	0.10	0.57	15.5450277	112.61	169.80	166.30	56.96	169.58	112	67	67	66		1.001	4.721	532
1246	199.621	201.378		0.16	0.16	1.32	1.06	0.25	79	78	66	2.08	1.5	69	0.014	100	100	3.9	-0.13	0.59	15.482028	112.38	169.67	166.19	56.98	169.36	111	67	67	66		1.001	4.884	550
1247	199.781	201.539		0.16	0.16	1.31	1.07	0.25	79	78	66	2.09	1.5	69	0.012	108	108	3.9	-0.02	0.59	15.4599257	112.02	169.34	165.93	57.01	169.03	110	67	67	66		1.001	4.886	548
1248	199.941	201.701		0.16	0.16	1.32	1.07	0.25	79	78	66	2.08	1.5	69	0.014	100	100	3.8	0.09	0.64	15.4596729	111.78	169.05	165.58	56.98	168.76	109	67	67	66		1.001	5.369	601
1249	200.100	201.863		0.16	0.16	1.32	1.07	0.25	79	78	66	2.09	1.5	69	0.015	96	97	3.9	-0.06	0.64	15.4444685	111.57	168.74	165.31	56.96	168.53	108	67	67	66		1.001	5.371	600
1250	200.260	202.024		0.16	0.16	1.32	1.06	0.25	79	78	66	2.08	1.5	69	0.012	108	108	3.8	0.01	0.59	15.4797134	111.38	168.50	165.02	56.89	168.27	108	67	67	66		1.001	4.884	545
1251	200.420	202.186		0.16	0.16	1.32	1.07	0.25	79	78	66	2.08	1.5	68	0.014	100	100	3.8	0.00	0.61	15.4984903	111.17	168.24	164.79	56.84	168.00	107	67	67	66		1.001	5.043	561
1252	200.580	202.348		0.16	0.16	1.32	1.07	0.25	79	78	66	2.09	1.5	68	0.015	96	97	4.0	-0.12	0.62	15.4214039	110.91	167.97	164.58	56.81	167.72	106	67	67	66		1.001	5.209	578
1253	200.740	202.510		0.16	0.16	1.33	1.07	0.25	79	78	66	2.1	1.5	68	0.015	96	97	3.8	0.12	0.62	15.4888296	110.71	167.73	164.31	56.73	167.44	106	67	67	66		1.001	5.204	577
1254	200.901	202.671		0.16	0.16	1.32	1.06	0.25	79	78	65	2.08	1.5	68	0.014	100	100	4.0	-0.12	0.63	15.5361327	110.54	167.45	164.04	56.64	167.18	105	67	67	65		1.001	5.235	579
1255	201.060	202.833		0.16	0.16	1.32	1.06	0.25	79	78	65	2.08	1.5	68	0.015	96	97	4.0	-0.06	0.59	15.5229006	110.14	167.12	163.69	56.65	166.78	104	67	67	65		1.001	4.902	541
1256	201.221	202.995		0.16	0.16	1.32	1.07	0.25	79	78	65	2.08	1.5	68	0.013	104	104	3.8	0.18	0.60	15.4708624	109.94	166.82	163.38	56.55	166.49	103	67	67	65		1.001	5.038	555
1257	201.381	203.156		0.16	0.16	1.33	1.07	0.25	79	78	65	2.08	1.5	68	0.015	96	96	3.8	0.02	0.62	15.5012646	109.72	166.54	163.22	56.57	166.29	102	66	67	65		1.001	5.197	571
1258	201.541	203.317		0.16	0.16	1.33	1.07	0.25	79	78	65	2.09	1.5	71	0.014	100	100	4.0	-0.13	0.59	15.481307	109.45	166.33	163.15	56.57	166.01	133	67	67	65		1.001	4.878	535
1259	201.702	203.479		0.16	0.16	1.32	1.07	0.25	79	78	65	2.08	1.5	72	0.014	101	101	3.9	0.09	0.59	15.421629	109.16	165.99	162.65	56.56	165.72	145	67	67	65		1.001	4.879	533
1260	201.861	203.641		0.16	0.16	1.32	1.07	0.25	79	78	65	2.07	1.5	69	0.013	103	104	3.9	-0.02	0.59	15.4977493	108.94	165.79	162.45	56.61	165.55	130	66	67	65		1.001	4.878	532
1261	202.021	203.803		0.16	0.16	1.32	1.06	0.25	79	78	65	2.08	1.5	68	0.012	108	108	3.9	0.02	0.57	15.4215727	108.50	165.37	162.11	56.63	165.13	120	66	67	65		1.001	4.710	512
1262	202.182	203.964		0.16	0.16	1.32	1.07	0.25	79	78	65	2.08	1.5	68	0.013	104	103	3.8	0.10	0.60	15.4889507	108.27	165.11	161.84	56.66	164.93	115	66	67	65		1.001	5.033	546
1263	202.342	204.126		0.16	0.16	1.31	1.07	0.25	79	78	65	2.09	1.5	68	0.015	96	97	3.9	-0.18	0.61	15.5036106	107.92	164.91	161.65	56.69	164.61	111	66	66	65		1.001	5.046	545
1264	202.501	204.288		0.16	0.16	1.31	1.07	0.25	79	78	65	2.08	1.5	69	0.015	96	97	3.8	0.17	0.61	15.5355968	107.61	164.73	161.45	56.71	164.33	108	66	66	65		1.001	5.044	543
1265	202.661	204.450		0.16	0.16	1.32	1.06	0.25	79	78	66	2.09	1.5	68	0.014	100	100	3.9	-0.10	0.61	15.5413342	107.35	164.40	161.17	56.72	164.07	106	66	66	66		1.001	5.046	542
1266	202.822	204.611		0.16	0.16	1.32	1.07	0.25	79	78	65	2.08	1.5	68	0.014	100	100	3.9	-0.01	0.62	15.5162554	106.93	163.99	160.78	56.80	163.74	105	66	66	65		1.001	5.205	557
1267	202.981	204.772		0.16	0.16	1.33	1.07	0.25	79	78	65	2.07	1.5	68	0.013	103	103	3.9	0.01	0.60	15.4979048	106.58	163.82	160.59	56.95	163.53	104	66	66	65		1.001	5.031	537
1268	203.141	204.935		0.16	0.16	1.33	1.07	0.25	79	78	66	2.08	1.5	68	0.013	104	105	4.0	-0.09	0.64	15.5268536	106.23	163.51	160.35	57.07	163.30	103	66	66	66		1.001	5.354	570

Elapsed Time	Particulate Sampling Data																	Fuel Weight, lb		Flow, gpm		Temperature Data, oF												
	Gas Meter Cubic Feet (1)	Gas Meter Cubic Feet (2)	Gas Meter Cubic Feet (amb)	Sample Rate, cfm (1)	Sample Rate, cfm (2)	Orifice dH (1)	Orifice dH (2)	Orifice dH (amb)	Meter oF (1)	Meter oF (2)	Meter oF (amb)	Meter Vac. in. Hg. (1)	Meter Vac. in. Hg. (2)	Dilution Tunnel Temp.	Dilution Tunnel dP	Pro. Rate (%) (1)	Pro. Rate (%) (2)	Scale Reading	Weight Change	Load Side Liquid Flow Rate	Boiler Side Liquid Flow Rate (optional)	Thermopile ΔT	Boiler to Heat Exch. Temp.	Heat Exch to Boiler Temp.	Inlet Load Temp.	Outlet Load Temp.	Stack	Filter (1)	Filter (2)	Ambient		Specific Heat of Inlet Water (BTU/lb-°F)	Mass Flow Rate of Inlet Water (lb/min)	Heat Output, Btu
1269	203.301	205.096		0.16	0.16	1.33	1.07	0.25	79	78	65	2.09	1.5	68	0.013	104	103	3.9	0.07	0.62	15.5066233	105.76	163.23	160.10	57.23	162.99	102	66	66	65		1.001	5.207	551
1270	203.462	205.258		0.16	0.16	1.33	1.07	0.25	79	78	66	2.08	1.5	69	0.013	104	104	3.9	0.02	0.61	15.4886808	105.30	162.92	159.82	57.39	162.69	101	66	66	66		1.001	5.121	540
1271	203.621	205.419		0.16	0.16	1.33	1.07	0.25	78	78	65	2.08	1.5	69	0.013	103	103	3.9	0.00	0.53	15.4684687	104.93	162.76	159.79	57.55	162.48	100	66	66	65		1.001	4.393	462
1272	203.782	205.582		0.16	0.16	1.33	1.07	0.25	78	78	65	2.09	1.5	69	0.014	101	101	3.9	-0.02	0.59	15.4541998	104.54	162.48	159.37	57.67	162.21	100	66	66	65		1.001	4.880	511
1273	203.942	205.743		0.16	0.16	1.32	1.07	0.25	78	78	66	2.09	1.5	70	0.015	97	96	4.0	-0.12	0.60	15.5627432	104.06	162.15	159.09	57.82	161.88	99	66	66	66		1.001	5.041	525
1274	204.103	205.904		0.16	0.16	1.33	1.07	0.25	78	78	66	2.1	1.5	72	0.015	98	97	4.1	-0.05	0.58	15.5276918	103.64	161.84	158.71	57.98	161.62	129	67	67	66		1.001	4.874	506
1275	204.263	206.066		0.16	0.16	1.32	1.06	0.25	78	78	66	2.08	1.5	75	0.014	101	101	4.0	0.11	0.64	15.4887009	103.30	161.66	158.68	58.10	161.40	149	67	67	66		1.001	5.364	555
1276	204.423	206.228		0.16	0.16	1.33	1.07	0.25	78	78	66	2.09	1.5	76	0.013	105	105	3.8	0.13	0.62	15.458251	102.90	161.34	158.28	58.24	161.14	156	67	67	66		1.001	5.194	535
1277	204.582	206.389		0.16	0.16	1.32	1.06	0.25	78	78	66	2.09	1.5	77	0.015	97	97	3.9	-0.09	0.60	15.4599981	102.53	161.10	158.02	58.34	160.88	160	67	67	66		1.001	5.034	517
1278	204.742	206.550		0.16	0.16	1.32	1.06	0.25	78	78	66	2.09	1.5	78	0.014	101	101	3.8	0.16	0.64	15.4117317	102.24	160.98	158.07	58.42	160.67	163	67	67	66		1.001	5.359	549
1279	204.902	206.712		0.16	0.16	1.32	1.06	0.25	78	78	66	2.09	1.5	78	0.011	114	114	3.8	-0.03	0.62	15.4582129	102.01	160.72	157.63	58.50	160.51	167	67	67	66		1.001	5.197	531
1280	205.061	206.874		0.16	0.16	1.32	1.06	0.25	78	78	66	2.08	1.5	79	0.013	104	105	3.6	0.25	0.66	15.4435425	101.59	160.41	157.29	58.58	160.17	172	67	68	66		1.001	5.519	561
1281	205.221	207.034		0.16	0.16	1.32	1.06	0.25	78	78	67	2.09	1.5	79	0.014	101	100	3.5	0.03	0.57	15.5245905	101.33	160.27	157.10	58.65	159.98	178	68	68	67		1.001	4.715	478
1282	205.380	207.196		0.16	0.16	1.32	1.06	0.25	79	78	66	2.09	1.5	80	0.014	100	101	3.3	0.23	0.62	15.4597292	101.26	160.23	157.09	58.68	159.93	184	68	68	66		1.001	5.200	527
1283	205.540	207.358		0.16	0.16	1.32	1.06	0.25	78	78	66	2.1	1.5	83	0.016	95	95	3.2	0.07	0.60	15.5070515	101.17	160.20	157.09	58.70	159.87	196	68	68	66		1.001	5.033	510
1284	205.700	207.518		0.16	0.16	1.32	1.06	0.25	78	78	66	2.11	1.5	85	0.013	105	104	3.1	0.10	0.60	15.5029049	101.19	160.24	157.14	58.72	159.90	206	68	68	66		1.001	5.030	510
1285	205.859	207.679		0.16	0.16	1.32	1.06	0.25	78	78	66	2.11	1.5	86	0.012	109	109	2.8	0.32	0.60	15.5874825	101.30	160.42	157.37	58.75	160.06	213	68	69	66		1.001	5.035	511
1286	206.019	207.840		0.16	0.16	1.31	1.06	0.25	79	78	66	2.11	1.5	87	0.013	105	105	2.8	0.04	0.62	15.5205212	101.53	160.65	157.71	58.78	160.31	221	69	69	66		1.001	5.171	526
1287	206.179	208.002		0.16	0.16	1.32	1.06	0.25	78	78	67	2.12	1.5	88	0.015	98	99	2.6	0.19	0.60	15.5112877	101.72	160.90	157.76	58.78	160.50	229	69	69	67		1.001	5.027	512
1288	206.338	208.162		0.16	0.16	1.31	1.06	0.25	79	78	66	2.12	1.5	90	0.014	101	101	2.3	0.25	0.58	15.5832415	102.10	161.25	158.11	58.80	160.90	237	69	69	66		1.001	4.864	497
1289	206.497	208.323		0.16	0.16	1.31	1.06	0.25	79	78	67	2.13	1.5	90	0.013	105	106	2.1	0.23	0.58	15.5161266	102.49	161.75	158.61	58.80	161.29	244	69	70	67		1.001	4.868	499
1290	206.656	208.484		0.16	0.16	1.30	1.06	0.25	79	78	67	2.11	1.5	91	0.012	109	110	2.0	0.09	0.62	15.383213	102.93	162.19	159.01	58.81	161.74	248	70	70	67		1.001	5.190	535
1291	206.815	208.644		0.16	0.16	1.31	1.06	0.25	79	78	67	2.11	1.5	91	0.013	105	105	1.9	0.06	0.54	15.4865454	103.34	162.64	159.44	58.84	162.18	251	70	70	67		1.001	4.539	470
1292	206.973	208.805		0.16	0.16	1.31	1.06	0.25	79	78	67	2.11	1.5	92	0.013	105	106	1.7	0.25	0.58	15.5452309	103.80	163.10	159.91	58.86	162.66	253	70	70	67		1.001	4.862	505
1293	207.132	208.966		0.16	0.16	1.31	1.06	0.25	79	78	67	2.13	1.5	92	0.013	105	106	1.5	0.16	0.60	15.5375328	104.30	163.56	160.38	58.88	163.18	253	70	70	67		1.001	5.027	525
1294	207.291	209.127		0.16	0.16	1.31	1.05	0.25	79	78	68	2.11	1.5	92	0.013	105	106	1.4	0.14	0.60	15.4895258	104.73	164.13	160.88	58.88	163.60	254	70	71	68		1.001	5.025	527
1295	207.450	209.287		0.16	0.16	1.31	1.05	0.25	79	78	68	2.13	1.5	92	0.013	105	105	1.2	0.18	0.62	15.5632744	105.33	164.67	161.44	58.84	164.17	254	71	71	68		1.001	5.185	547
1296	207.610	209.447		0.16	0.16	1.30	1.06	0.25	79	78	68	2.12	1.5	92	0.013	106	105	1.2	0.05	0.56	15.5065355	105.85	165.12	161.95	58.80	164.64	254	71	71	68		1.001	4.707	499
1297	207.768	209.608		0.16	0.16	1.31	1.05	0.25	79	78	70	2.12	1.6	93	0.014	101	102	0.9	0.24	0.62	15.5652199	106.37	165.65	162.53	58.76	165.14	255	71	71	70		1.001	5.184	552
1298	207.927	209.768		0.16	0.16	1.30	1.05	0.25	79	78	69	2.14	1.6	93	0.013	105	105	0.7	0.19	0.60	15.526844	106.94	166.17	162.95	58.73	165.67	255	71	71	69		1.001	5.041	540
1299	208.085	209.928		0.16	0.16	1.30	1.05	0.25	79	78	69	2.15	1.6	93	0.013	105	105	0.6	0.08	0.60	15.4600582	107.45	166.52	163.35	58.69	166.14	255	71	71	69		1.001	5.021	540
1300	208.243	210.089		0.16	0.16	1.30	1.05	0.25	79	78	68	2.15	1.6	93	0.014	101	102	0.0	0.61	0.60	15.5350628	107.95	167.09	163.91	58.65	166.60	256	71	72	68		1.001	5.023	543
1301	208.402	210.249	296.377	0.16	0.16	1.30	1.05	0.25	79	78	68	2.16	1.6	94	0.013	105	105	0.0	0.04	0.63	15.515234	108.35	167.46	164.17	58.62	166.97	257	72	72	68		1.001	5.231	567
	208.402	210.249	296.377			1.33	1.07	0.25	79	78	67			78	0.014					0.56	15.49	112.2	173.1	168.7	60.3	172.4		69.44	69.53		#DIV/0!			
																																	TOTAL:	685996

TF_{avg}	165.815
TI_{avg}	166.967

OMNI-Test Laboratories

Manufacturer: Central Boiler
Model: Edge 360
Date: 12/10/19
Run: 2
Control #: 0117WB040E
Test Duration: 1301
Output Category: II

Technicians: _____

Test Results in Accordance with CSA B415.1-09

	HHV Basis	LHV Basis
Overall Efficiency	55.4%	59.7%
Combustion Efficiency	96.0%	96.0%
Heat Transfer Efficiency	58%	62.2%

Output Rate (kJ/h)	23,132	21,943	**(Btu/h)**
Burn Rate (kg/h)	2.10	4.62	**(lb/h)**
Input (kJ/h)	41,718	39,574	**(Btu/h)**

Test Load Weight (dry kg)	45.49	100.25	**dry lb**
MC wet (%)	17.42		
MC dry (%)	21.09		
Particulate (g)	67.32		
CO (g)	4,199		
Test Duration (h)	21.68		

Emissions	**Particulate**	**CO**
g/MJ Output	0.13	8.37
g/kg Dry Fuel	1.48	92.31
g/h	3.10	193.65
lb/MM Btu Output	0.31	19.46

Air/Fuel Ratio (A/F)	27.06

VERSION: 2.2 12/14/2009

VERSION: 2.2 12/14/2009

Manufacturer: Central Boiler
Model: Edge 360
Date: 12/10/2019
Run: 2
Control #: 0117WB040E
Test Duration: 1301
Input Category: II

Appliance Type: Non-Cat (Cat, Non

Temp. Units F (F or C)
Weight Units lb (kg or lb)

Wood Moisture (% wet):	17.42			
Load Weight (lb wet):	121.40			
Burn Rate (dry kg/h):	2.10			
Total Particulate Emissions:	67.32 g			

Fuel Data

	Oak	
HHV	19,887	kj/kg
%C	50	
%H	6.6	
%O	42.9	
%ASH	0.5	

	Averages	**0.49**	**4.03**	**#DIV/0!**	**179.30**	**66.73**
					Temp. (ºF)	
Elapsed Time (min)	**Fuel Weight Remaining (lb)**	**Flue Gas Composition (%) CO**	**CO_2**	**O_2**	**Flue Gas**	**Room Temp**
0	121.4	0.2	15.4		301	67
1	120.9	0.6	5.5		275	67
2	120.5	0.5	4.4		288	67
3	120.1	0.3	19.2		314	67
4	119.4	0.1	18.5		330	67
5	118.9	0.1	17.9		340	67
6	118.4	0.1	17.1		346	67
7	118.0	0.2	16.6		351	67
8	117.5	0.1	16.6		357	67
9	116.8	0.2	16.6		362	67
10	116.2	0.2	16.6		367	67
11	115.9	0.2	16.1		370	67
12	115.4	0.2	15.7		376	67
13	114.8	0.3	15.5		380	67
14	114.3	0.3	14.6		384	66
15	113.9	0.2	14.3		389	66
16	113.5	0.2	14.2		390	66
17	112.9	0.4	13.4		374	66
18	113.0	0.2	10.8		333	66
19	112.9	0.3	5.7		309	66
20	112.9	0.2	3.6		295	66
21	112.9	0.2	3.3		283	66

22	113.0	0.2	2.9		272	66
23	112.9	0.3	2.7		262	66
24	112.8	0.3	2.6		255	66
25	112.9	0.3	2.6		247	66
26	112.8	0.3	2.6		240	66
27	112.9	0.3	2.5		234	66
28	112.9	0.3	2.4		229	66
29	113.0	0.3	2.3		225	66
30	113.0	0.2	1.8		223	66
31	112.9	0.1	1.2		218	66
32	112.9	0.1	0.8		214	66
33	112.8	0.1	0.8		210	66
34	113.0	0.1	1.0		206	66
35	113.0	0.1	1.3		202	66
36	112.9	0.1	1.5		198	66
37	113.0	0.2	1.5		194	67
38	112.9	0.2	1.5		191	67
39	113.1	0.2	1.7		187	67
40	112.7	0.2	1.6		183	67
41	112.8	0.2	1.7		180	67
42	113.0	0.2	1.8		176	67
43	112.8	0.2	2.0		173	66
44	113.0	0.3	2.5		171	66
45	112.9	0.3	2.7		168	66
46	112.8	0.3	2.9		165	66
47	113.2	0.3	3.2		163	66
48	112.8	0.3	3.3		160	66
49	113.0	0.4	3.5		158	66
50	113.1	0.3	3.4		155	65
51	113.0	0.3	3.4		153	66
52	113.1	0.3	3.3		150	66
53	113.0	0.3	3.3		148	66
54	113.0	0.3	3.2		146	66
55	113.0	0.3	3.0		144	66
56	113.0	0.3	3.0		142	66
57	113.1	0.3	3.0		140	66
58	113.0	0.3	2.9		138	66
59	113.0	0.3	2.7		142	66
60	112.9	0.6	5.1		186	66
61	112.7	0.8	3.1		182	66
62	112.9	0.9	2.9		166	66
63	112.9	0.7	2.4		156	66

64	112.9	0.6	2.4		150	66
65	112.8	0.6	2.6		145	66
66	112.9	0.5	2.6		141	66
67	112.9	0.5	2.7		139	66
68	112.9	0.5	2.7		136	66
69	112.9	0.4	2.5		134	66
70	112.9	0.4	2.5		132	66
71	112.9	0.4	2.5		130	66
72	112.9	0.4	2.5		129	67
73	112.8	0.3	2.3		127	66
74	112.9	0.3	2.3		125	67
75	112.9	0.3	2.3		124	67
76	112.9	0.3	2.2		123	67
77	112.8	0.3	2.2		121	67
78	112.9	0.3	2.1		120	67
79	112.8	0.3	2.1		119	67
80	112.8	0.3	2.1		118	67
81	112.8	0.2	1.9		117	67
82	112.9	0.2	1.9		115	67
83	112.8	0.2	1.8		114	67
84	112.8	0.2	1.9		113	67
85	112.8	0.2	1.9		112	67
86	112.8	0.2	1.8		111	67
87	112.9	0.2	1.8		111	67
88	112.8	0.2	1.8		110	67
89	112.8	0.2	1.7		109	67
90	112.8	0.2	1.7		108	67
91	112.7	0.2	1.7		143	67
92	112.7	0.1	1.8		168	67
93	112.9	0.2	1.3		149	67
94	112.6	0.2	1.1		137	67
95	112.9	0.2	1.1		129	68
96	112.7	0.2	1.0		125	67
97	112.5	0.1	0.9		121	68
98	112.6	0.1	0.9		119	68
99	112.8	0.1	0.9		117	68
100	112.7	0.1	0.9		115	67
101	112.7	0.1	0.8		113	67
102	112.6	0.1	0.8		112	67
103	112.7	0.1	0.8		111	67
104	112.8	0.1	0.8		110	67
105	112.8	0.1	0.8		109	67

106	112.7	0.1	0.8		108	67
107	112.6	0.1	0.8		107	67
108	112.7	0.1	0.8		106	67
109	112.6	0.1	0.9		105	66
110	112.6	0.1	0.9		105	66
111	112.6	0.1	0.9		104	66
112	112.6	0.1	0.9		103	66
113	112.7	0.1	1.0		102	66
114	112.8	0.1	1.0		102	66
115	112.6	0.1	1.1		101	66
116	112.7	0.1	1.2		100	66
117	112.6	0.1	1.2		137	66
118	112.5	0.1	1.8		158	66
119	112.4	0.3	1.4		171	66
120	112.3	1.3	2.9		189	66
121	112.1	1.9	4.2		208	66
122	111.9	2.3	5.4		229	66
123	111.3	2.0	7.8		256	67
124	110.8	1.0	11.2		282	67
125	110.4	0.5	12.1		302	67
126	109.8	0.4	12.5		316	67
127	109.4	0.3	12.4		328	67
128	108.7	0.3	12.7		337	67
129	108.2	0.3	12.7		344	67
130	107.8	0.3	12.3		348	67
131	107.4	0.4	11.8		351	67
132	106.7	0.3	11.8		352	67
133	106.2	0.4	11.3		353	66
134	105.7	0.5	11.1		354	66
135	105.0	0.7	11.1		354	66
136	104.5	0.8	10.4		354	66
137	104.1	1.0	11.0		352	66
138	103.4	1.1	9.8		349	66
139	102.9	1.3	9.7		343	66
140	102.1	1.4	9.6		333	66
141	101.6	1.8	9.2		326	66
142	101.0	1.8	9.2		324	66
143	100.4	1.7	9.5		326	66
144	99.5	1.7	10.3		339	66
145	99.1	1.4	11.3		347	66
146	98.4	1.4	10.7		345	67
147	97.8	1.5	9.9		343	67

148	97.1	1.6	9.9		346	66
149	96.5	1.5	10.8		354	67
150	96.0	1.4	10.8		357	67
151	95.3	1.4	10.6		355	67
152	94.5	1.5	9.8		352	68
153	93.9	1.5	9.8		352	68
154	93.5	1.6	9.9		332	68
155	93.3	2.0	6.3		301	68
156	93.2	1.9	4.8		283	67
157	93.0	1.4	3.8		271	67
158	93.0	1.2	3.5		261	67
159	93.0	0.9	2.9		252	67
160	92.8	0.7	2.6		244	66
161	92.8	0.6	2.3		237	66
162	92.9	0.5	2.2		231	66
163	92.9	0.5	2.1		226	67
164	92.8	0.4	2.0		221	66
165	92.8	0.4	1.9		216	66
166	92.7	0.3	1.8		213	66
167	93.0	0.2	1.4		211	66
168	92.8	0.2	0.9		207	66
169	92.8	0.1	0.6		204	66
170	92.8	0.1	0.7		199	66
171	92.9	0.1	0.8		195	67
172	92.7	0.2	1.1		192	66
173	92.8	0.2	1.3		188	66
174	92.9	0.2	1.6		185	67
175	92.8	0.3	1.9		181	67
176	92.7	0.3	2.2		178	67
177	92.7	0.4	2.4		175	67
178	92.7	0.4	2.6		172	67
179	92.8	0.4	2.6		169	67
180	92.8	0.4	2.6		166	67
181	92.7	0.4	2.6		163	67
182	92.8	0.4	2.7		161	67
183	92.7	0.4	2.7		158	67
184	92.7	0.4	2.7		156	66
185	92.9	0.4	2.6		154	66
186	92.8	0.4	2.7		151	66
187	92.8	0.4	2.8		149	66
188	92.8	0.4	2.8		147	65
189	92.7	0.4	2.9		145	65

190	92.9	0.4	2.8		143	65
191	92.8	0.4	2.8		141	66
192	93.0	0.4	2.8		139	66
193	92.9	0.4	2.7		137	66
194	92.8	0.4	2.7		136	66
195	92.8	0.4	2.7		134	66
196	92.7	0.4	2.7		150	66
197	92.5	0.6	4.2		177	66
198	92.5	0.1	0.7		167	66
199	92.5	0.0	0.4		156	66
200	92.5	0.0	0.4		148	66
201	92.4	0.1	0.5		142	66
202	92.4	0.1	0.5		139	66
203	92.4	0.1	0.6		136	67
204	92.4	0.1	0.6		134	68
205	92.4	0.1	0.6		132	68
206	92.4	0.1	0.6		130	67
207	92.5	0.1	0.6		128	67
208	92.4	0.1	0.6		126	67
209	92.4	0.1	0.6		125	67
210	92.4	0.1	0.7		123	67
211	92.6	0.1	0.6		122	67
212	92.5	0.1	0.7		121	67
213	92.6	0.1	0.7		119	67
214	92.4	0.1	0.7		118	67
215	92.5	0.1	0.7		117	67
216	92.5	0.1	0.7		116	66
217	92.5	0.1	0.7		115	66
218	92.4	0.1	0.7		114	65
219	92.5	0.1	0.7		113	65
220	92.5	0.1	0.7		112	65
221	92.5	0.1	0.6		111	66
222	92.5	0.1	0.6		110	66
223	92.5	0.1	0.7		109	66
224	92.6	0.1	0.6		109	67
225	92.6	0.1	0.6		108	66
226	92.6	0.1	0.6		107	66
227	92.6	0.1	0.6		106	66
228	92.6	0.1	0.6		139	66
229	92.4	0.1	1.2		151	67
230	92.3	0.0	0.4		137	67
231	92.4	0.0	0.3		127	67

232	92.3	0.0	0.2		122	67
233	92.3	0.0	0.2		118	67
234	92.2	0.0	0.2		115	66
235	92.2	0.0	0.2		112	67
236	92.4	0.0	0.2		111	66
237	92.4	0.0	0.2		110	67
238	92.4	0.0	0.2		108	67
239	92.6	0.0	0.2		107	67
240	92.4	0.0	0.2		106	67
241	92.3	0.0	0.2		106	67
242	92.3	0.0	0.2		105	67
243	92.3	0.0	0.2		104	67
244	92.5	0.0	0.2		104	68
245	92.3	0.0	0.2		103	67
246	92.4	0.0	0.2		102	67
247	92.3	0.0	0.2		101	67
248	92.4	0.0	0.2		101	67
249	92.4	0.0	0.2		100	67
250	92.2	0.0	0.2		100	67
251	92.3	0.0	0.2		99	67
252	92.4	0.0	0.2		98	67
253	92.2	0.0	0.2		98	67
254	92.3	0.0	0.2		98	66
255	92.4	0.0	0.2		97	66
256	92.4	0.0	0.2		96	66
257	92.4	0.0	0.3		96	66
258	92.5	0.0	0.3		96	66
259	92.3	0.0	0.3		105	66
260	92.4	0.1	0.6		134	66
261	92.3	0.0	0.5		133	66
262	92.1	0.0	0.2		123	66
263	92.1	0.0	0.2		126	66
264	92.1	0.0	0.3		146	66
265	92.1	0.0	0.1		154	66
266	92.0	0.0	0.1		157	66
267	91.7	0.0	0.1		158	66
268	91.7	0.0	0.1		160	66
269	91.9	0.0	0.1		161	66
270	91.9	0.0	0.1		161	66
271	91.8	0.0	0.1		161	66
272	91.8	0.0	0.1		162	67
273	91.9	0.0	0.1		162	66

274	91.6	0.0	0.1		161	66
275	91.8	0.0	0.1		161	67
276	91.8	0.0	0.1		161	66
277	91.8	0.0	0.1		161	66
278	91.7	0.0	0.1		161	66
279	91.7	0.0	0.1		161	67
280	91.7	0.0	0.1		160	67
281	91.7	0.0	0.1		160	66
282	91.6	0.0	0.1		160	67
283	91.5	0.0	0.1		159	67
284	91.5	0.0	0.1		159	67
285	91.5	0.0	0.1		159	67
286	91.6	0.0	0.1		158	68
287	91.4	0.0	0.1		158	67
288	91.5	0.0	0.2		158	67
289	91.5	0.0	0.2		158	67
290	91.7	0.0	0.2		157	67
291	91.4	0.0	0.2		157	68
292	91.5	0.0	0.3		157	67
293	91.4	0.1	0.3		157	67
294	91.4	0.1	0.5		158	67
295	91.3	0.2	0.7		159	67
296	91.3	0.2	1.1		160	67
297	91.1	0.4	1.5		163	67
298	91.1	0.5	1.9		166	67
299	91.2	0.5	2.2		169	67
300	90.9	0.6	2.5		173	67
301	90.8	0.6	2.9		177	67
302	90.6	0.6	3.4		182	67
303	90.7	0.6	4.1		188	67
304	90.4	0.7	5.0		198	67
305	90.1	0.6	4.8		210	67
306	89.9	0.8	5.6		220	67
307	89.5	0.8	6.6		229	67
308	89.3	0.8	7.2		237	67
309	89.0	0.9	7.5		244	67
310	88.6	1.0	8.0		251	67
311	88.0	0.9	8.5		259	67
312	87.8	1.0	9.1		267	67
313	87.3	1.0	9.7		276	67
314	86.8	1.1	10.1		286	67
315	86.4	0.9	10.6		296	67

316	85.8	0.9	10.8		304	67
317	85.5	0.9	11.2		313	67
318	84.9	0.9	11.5		321	67
319	84.3	0.8	11.8		331	67
320	83.6	0.8	12.2		340	67
321	83.0	0.7	12.7		348	67
322	82.4	0.6	13.2		354	67
323	81.9	0.6	13.3		359	67
324	81.2	0.6	13.2		363	67
325	80.5	0.6	13.4		366	68
326	79.9	0.7	13.2		368	67
327	79.1	0.6	13.3		372	67
328	78.6	0.5	13.9		378	67
329	78.1	0.4	14.8		378	68
330	77.4	0.7	13.4		377	67
331	77.0	0.6	13.2		377	67
332	76.3	0.5	13.3		377	67
333	75.7	0.5	13.0		378	67
334	75.1	0.4	13.1		379	68
335	74.5	0.4	13.1		379	68
336	74.0	0.4	13.1		381	67
337	73.5	0.4	13.0		382	68
338	72.9	0.5	12.9		383	68
339	72.5	0.4	13.1		355	68
340	72.1	0.5	11.6		324	68
341	72.1	1.1	14.6		305	68
342	71.9	0.9	12.5		291	68
343	71.8	0.8	13.5		279	68
344	71.7	0.6	11.0		268	68
345	71.7	0.6	8.2		259	68
346	71.5	0.8	5.6		252	68
347	71.4	0.7	4.3		245	68
348	71.3	0.8	3.4		238	68
349	71.5	0.8	2.7		233	68
350	71.4	0.7	2.5		227	68
351	71.3	0.7	2.3		225	68
352	71.5	0.5	1.8		223	68
353	71.3	0.3	1.2		220	68
354	71.4	0.3	1.1		216	67
355	71.3	0.4	1.3		212	67
356	71.2	0.4	1.5		208	68
357	71.3	0.5	1.7		203	68

358	71.4	0.5	2.0		199	68
359	71.1	0.6	2.3		196	68
360	71.2	0.7	2.5		192	68
361	71.3	0.7	2.7		189	68
362	71.3	0.8	3.0		185	68
363	71.3	0.9	3.2		182	68
364	71.3	0.9	3.4		179	68
365	71.3	0.9	3.3		175	68
366	71.4	1.0	3.6		172	68
367	71.3	1.0	3.6		170	68
368	71.3	0.9	3.5		167	68
369	71.4	0.9	3.4		165	68
370	71.3	1.0	3.5		162	68
371	71.4	0.9	3.3		159	67
372	71.3	0.9	3.2		157	67
373	71.4	0.9	3.2		154	67
374	71.3	0.9	3.2		152	67
375	71.2	0.9	3.3		150	67
376	71.5	0.9	3.2		148	67
377	71.3	0.9	3.1		146	67
378	71.4	0.9	3.1		144	67
379	71.2	0.9	3.1		142	66
380	71.4	0.9	3.1		140	67
381	71.3	0.9	3.2		163	67
382	71.0	1.6	5.3		188	66
383	70.9	0.3	1.6		174	67
384	70.9	0.2	1.3		162	67
385	70.9	0.2	1.3		154	66
386	71.0	0.2	1.4		149	67
387	70.9	0.2	1.4		145	67
388	70.9	0.2	1.4		142	66
389	71.0	0.2	1.4		139	66
390	71.1	0.2	1.4		137	66
391	70.8	0.2	1.3		135	68
392	70.9	0.2	1.3		133	67
393	70.9	0.2	1.3		131	67
394	70.9	0.2	1.2		130	67
395	71.0	0.2	1.2		128	67
396	70.9	0.2	1.2		126	67
397	70.9	0.2	1.2		125	66
398	71.0	0.2	1.2		124	67
399	70.8	0.2	1.1		122	66

400	71.0	0.2	1.1		121	66
401	70.9	0.2	1.1		120	66
402	70.9	0.2	1.1		119	66
403	70.8	0.1	1.1		118	66
404	70.8	0.2	1.1		117	66
405	70.9	0.1	1.1		116	66
406	71.0	0.1	1.1		115	67
407	70.9	0.1	1.1		114	66
408	71.0	0.2	1.1		113	66
409	71.0	0.1	1.1		112	66
410	70.9	0.1	1.1		111	66
411	71.0	0.1	1.1		110	66
412	70.9	0.1	1.1		110	66
413	71.0	0.1	1.1		146	66
414	70.8	0.2	1.5		153	66
415	70.7	0.1	0.5		138	66
416	70.8	0.0	0.4		129	66
417	70.8	0.0	0.3		123	66
418	70.9	0.0	0.3		119	66
419	70.8	0.0	0.3		116	68
420	70.8	0.0	0.3		114	67
421	70.7	0.0	0.3		113	67
422	70.6	0.0	0.3		111	66
423	70.7	0.0	0.3		110	66
424	70.7	0.0	0.3		109	66
425	70.8	0.0	0.3		108	66
426	70.7	0.0	0.3		107	66
427	70.7	0.0	0.3		106	66
428	70.7	0.0	0.3		105	66
429	70.7	0.0	0.3		105	66
430	70.7	0.0	0.3		104	66
431	70.7	0.0	0.3		103	66
432	70.6	0.0	0.3		102	66
433	70.8	0.0	0.3		101	66
434	70.7	0.0	0.3		101	66
435	70.6	0.0	0.3		101	66
436	70.7	0.0	0.3		100	66
437	70.7	0.0	0.3		99	66
438	70.8	0.0	0.3		98	66
439	70.7	0.0	0.3		98	66
440	70.7	0.0	0.3		98	66
441	70.7	0.0	0.3		98	66

442	70.8	0.0	0.3		97	67
443	70.7	0.0	0.3		96	67
444	70.7	0.0	0.3		126	67
445	70.6	0.1	0.7		141	66
446	70.5	0.1	0.6		134	66
447	70.5	0.0	0.3		123	66
448	70.5	0.0	0.2		117	66
449	70.5	0.0	0.2		112	66
450	70.7	0.0	0.2		109	66
451	70.6	0.0	0.2		106	66
452	70.5	0.0	0.2		105	66
453	70.6	0.0	0.2		103	66
454	70.8	0.0	0.2		102	66
455	70.6	0.0	0.2		100	66
456	70.4	0.0	0.2		100	65
457	70.5	0.0	0.2		138	65
458	70.5	0.1	0.4		152	66
459	70.5	0.0	0.2		156	66
460	70.3	0.0	0.1		159	65
461	70.4	0.0	0.1		161	66
462	70.3	0.0	0.1		162	66
463	70.3	0.0	0.1		162	66
464	70.3	0.0	0.2		163	66
465	70.2	0.0	0.2		163	66
466	70.2	0.1	0.2		163	66
467	70.2	0.1	0.3		164	66
468	70.3	0.1	0.4		164	66
469	70.2	0.2	0.5		164	66
470	70.1	0.2	0.7		166	66
471	69.9	0.3	1.2		168	66
472	69.7	0.5	2.5		170	66
473	69.4	0.6	3.1		172	67
474	69.2	0.7	3.4		174	66
475	69.1	0.7	3.7		179	66
476	68.8	0.8	4.1		185	66
477	68.4	0.9	4.6		196	66
478	68.1	0.9	4.8		217	66
479	67.6	0.9	5.0		240	66
480	67.3	0.2	1.4		258	66
481	66.8	0.0	0.1		273	66
482	66.4	0.0	0.1		284	66
483	66.0	0.6	6.4		291	66

484	65.5	0.5	12.2		300	66
485	65.0	0.4	13.4		312	66
486	64.5	0.2	14.1		320	66
487	64.2	0.2	14.1		328	67
488	63.6	0.2	14.1		335	66
489	63.3	0.1	14.6		342	67
490	62.7	0.1	14.6		347	67
491	62.2	0.1	14.6		352	67
492	61.7	0.1	14.7		356	67
493	61.1	0.1	14.9		362	67
494	60.5	0.1	16.0		369	67
495	59.9	0.1	16.4		374	67
496	59.4	0.1	16.3		378	67
497	59.1	0.1	16.3		381	67
498	58.2	0.1	16.2		383	67
499	57.7	0.1	15.9		384	67
500	57.1	0.1	15.8		387	67
501	56.5	0.1	15.5		387	67
502	56.1	0.1	15.4		387	67
503	55.3	0.1	15.2		388	67
504	55.0	0.1	15.0		389	67
505	54.3	0.1	14.8		391	67
506	53.9	0.1	14.8		375	68
507	53.7	0.1	13.4		337	67
508	53.3	0.5	15.8		314	68
509	53.2	0.6	13.6		299	67
510	53.0	0.6	14.6		286	67
511	53.0	0.4	12.0		275	67
512	52.9	0.4	9.9		265	67
513	52.8	0.6	7.5		257	67
514	52.7	0.8	5.9		250	67
515	52.8	0.8	4.6		243	67
516	52.7	0.8	3.7		237	67
517	52.6	0.8	3.1		232	67
518	52.6	0.8	2.8		228	67
519	52.6	0.6	2.2		227	67
520	52.6	0.4	1.5		224	67
521	52.5	0.5	1.8		219	67
522	52.5	0.6	2.3		215	67
523	52.4	0.7	2.7		211	67
524	52.5	0.9	3.1		207	67
525	52.4	1.0	3.7		202	68

526	52.6	1.0	3.7		199	68
527	52.4	1.1	4.0		195	68
528	52.6	1.1	4.1		191	67
529	52.5	1.1	4.0		187	68
530	52.5	1.1	4.1		184	68
531	52.5	1.0	4.0		181	67
532	52.5	1.0	3.9		178	68
533	52.5	1.0	4.0		175	67
534	52.7	1.0	3.8		172	67
535	52.5	1.0	3.8		169	67
536	52.4	0.9	3.7		166	67
537	52.6	0.9	3.5		164	67
538	52.4	0.9	3.3		161	67
539	52.6	0.8	3.2		159	68
540	52.5	0.8	3.2		156	67
541	52.6	0.8	3.0		154	67
542	52.5	0.7	2.9		152	67
543	52.5	0.7	2.7		149	67
544	52.5	0.7	2.7		148	68
545	52.6	0.7	2.7		145	67
546	52.6	0.7	2.7		143	67
547	52.5	0.7	2.6		142	67
548	52.6	0.7	2.7		148	67
549	52.3	1.5	5.8		186	67
550	52.1	0.2	1.6		181	67
551	52.0	0.2	1.3		168	67
552	52.1	0.2	1.6		158	67
553	52.1	0.2	1.7		152	67
554	52.1	0.2	1.7		147	67
555	52.0	0.2	1.7		144	68
556	52.0	0.2	1.7		141	67
557	52.2	0.2	1.6		139	67
558	52.2	0.2	1.6		137	67
559	52.0	0.2	1.5		135	67
560	52.0	0.2	1.4		133	68
561	52.2	0.2	1.3		132	68
562	52.1	0.2	1.3		130	67
563	52.1	0.2	1.3		129	67
564	52.0	0.2	1.2		127	67
565	52.1	0.2	1.2		126	68
566	52.2	0.1	1.1		125	68
567	52.0	0.1	1.1		123	68

568	52.2	0.1	1.0		122	67
569	52.1	0.1	1.1		121	67
570	52.0	0.1	1.0		120	67
571	52.1	0.1	1.0		119	68
572	52.2	0.1	1.0		117	68
573	52.2	0.1	0.9		116	68
574	52.0	0.1	0.9		116	68
575	52.2	0.1	0.9		115	68
576	52.0	0.1	0.9		114	68
577	52.1	0.1	0.9		113	68
578	52.0	0.1	0.9		112	68
579	52.0	0.1	0.9		111	68
580	52.0	0.1	0.8		144	68
581	51.9	0.2	1.1		167	67
582	51.9	0.0	0.4		148	67
583	51.9	0.0	0.3		136	67
584	51.9	0.0	0.3		129	67
585	51.8	0.0	0.3		124	67
586	51.8	0.0	0.3		121	67
587	51.8	0.0	0.3		119	67
588	51.8	0.0	0.3		117	67
589	51.8	0.0	0.3		115	66
590	51.8	0.0	0.4		114	67
591	51.8	0.0	0.3		113	66
592	51.8	0.0	0.3		112	66
593	52.0	0.0	0.4		111	66
594	51.8	0.0	0.4		110	66
595	51.7	0.0	0.4		109	66
596	51.8	0.0	0.4		108	66
597	51.7	0.0	0.4		107	66
598	51.8	0.0	0.4		106	66
599	51.9	0.0	0.4		105	66
600	51.8	0.0	0.4		105	66
601	51.8	0.0	0.4		104	66
602	51.6	0.0	0.4		103	66
603	51.8	0.0	0.4		102	66
604	51.8	0.0	0.4		102	66
605	51.8	0.1	0.4		101	66
606	51.7	0.0	0.4		101	66
607	51.9	0.0	0.4		101	66
608	51.8	0.1	0.4		100	66
609	51.8	0.1	0.4		99	66

610	51.9	0.1	0.4		99	66
611	51.8	0.1	0.4		98	67
612	51.8	0.1	0.8		138	67
613	51.9	0.1	0.6		140	67
614	51.8	0.0	0.3		128	67
615	51.7	0.0	0.2		120	66
616	51.7	0.0	0.2		115	66
617	51.8	0.0	0.2		111	66
618	51.8	0.0	0.2		109	66
619	51.8	0.0	0.2		106	66
620	51.7	0.0	0.2		105	66
621	51.7	0.0	0.2		103	66
622	51.8	0.0	0.2		102	66
623	51.7	0.0	0.2		101	66
624	51.7	0.0	0.2		101	66
625	51.6	0.0	0.2		100	66
626	51.7	0.0	0.2		99	66
627	51.7	0.0	0.2		98	66
628	51.8	0.0	0.2		98	66
629	51.7	0.0	0.2		97	66
630	51.8	0.0	0.2		97	66
631	51.8	0.0	0.2		96	66
632	51.7	0.0	0.2		95	66
633	51.7	0.0	0.2		95	66
634	51.7	0.0	0.2		95	66
635	51.7	0.0	0.2		95	66
636	51.6	0.0	0.2		94	66
637	51.7	0.0	0.2		125	66
638	51.5	0.2	1.0		141	66
639	51.6	0.0	0.2		151	66
640	51.5	0.0	0.1		155	66
641	51.5	0.0	0.1		157	66
642	51.6	0.0	0.1		159	66
643	51.5	0.0	0.1		160	66
644	51.5	0.0	0.1		160	66
645	51.6	0.0	0.1		161	66
646	51.5	0.0	0.1		161	66
647	51.4	0.0	0.1		161	66
648	51.5	0.0	0.2		161	66
649	51.4	0.0	0.2		161	66
650	51.4	0.1	0.3		161	66
651	51.3	0.2	0.5		162	66

652	51.2	0.3	1.0		164	66
653	51.1	0.6	2.2		169	66
654	51.0	0.8	4.1		176	66
655	50.7	1.2	6.0		185	66
656	50.4	1.5	7.8		198	66
657	50.1	1.1	6.6		209	66
658	49.8	1.3	7.4		221	66
659	49.4	1.4	8.3		233	66
660	49.0	1.3	9.6		247	67
661	48.6	1.1	11.0		263	66
662	48.3	0.7	12.2		278	66
663	47.8	0.3	13.6		294	66
664	47.4	0.1	14.9		310	66
665	46.8	0.1	15.2		322	67
666	46.4	0.1	14.8		329	67
667	46.0	0.1	14.9		336	67
668	45.5	0.1	15.2		342	67
669	45.0	0.1	15.3		347	67
670	44.4	0.1	15.3		351	67
671	44.1	0.1	15.4		355	67
672	43.7	0.1	15.4		359	67
673	43.0	0.1	15.7		364	67
674	42.5	0.1	15.7		368	67
675	42.1	0.1	15.8		372	67
676	41.6	0.1	15.9		375	67
677	41.0	0.1	15.9		378	67
678	40.7	0.1	15.8		380	67
679	40.0	0.1	15.8		382	67
680	39.7	0.1	15.8		385	67
681	39.1	0.1	16.1		387	67
682	38.6	0.1	16.0		384	67
683	38.4	0.1	13.1		340	68
684	38.1	0.2	15.7		314	68
685	37.8	0.3	14.3		300	67
686	37.8	1.0	17.5		286	67
687	37.7	0.5	15.8		275	67
688	37.5	0.2	13.9		265	67
689	37.4	0.1	12.1		257	67
690	37.4	0.1	11.1		250	67
691	37.3	0.2	9.7		243	67
692	37.2	0.2	8.4		237	67
693	37.0	0.3	7.4		232	67

694	37.1	0.4	6.3		227	67
695	37.0	0.4	4.7		225	67
696	37.1	0.4	3.3		222	67
697	37.0	0.8	3.8		219	67
698	37.0	1.2	4.6		214	67
699	37.0	1.6	5.5		210	67
700	37.0	2.0	6.3		206	67
701	36.9	2.3	6.9		201	67
702	37.1	2.4	7.3		198	67
703	37.1	2.5	7.5		194	67
704	37.0	2.6	7.6		190	67
705	36.9	2.6	7.7		187	67
706	36.9	2.4	7.1		183	67
707	37.0	2.6	7.6		180	67
708	36.9	2.6	7.4		177	67
709	36.9	2.5	7.2		174	67
710	36.8	2.4	6.9		171	67
711	37.0	2.3	6.7		168	67
712	36.9	2.3	6.6		166	67
713	36.8	2.2	6.3		163	67
714	37.0	2.1	6.0		160	67
715	36.9	1.9	5.7		158	67
716	36.9	2.0	5.8		155	67
717	37.0	2.0	5.9		153	67
718	37.0	1.9	5.6		151	67
719	37.0	1.8	5.3		149	67
720	37.0	1.9	5.6		147	67
721	36.9	1.8	5.4		145	67
722	37.0	1.9	5.4		144	67
723	37.0	1.9	5.5		142	67
724	36.9	1.8	5.3		140	67
725	36.7	2.2	6.4		181	67
726	36.7	0.9	3.7		187	67
727	36.6	0.9	3.5		169	67
728	36.5	0.7	3.1		159	67
729	36.5	0.6	3.1		152	67
730	36.5	0.6	2.9		148	68
731	36.5	0.6	2.8		144	67
732	36.6	0.5	2.8		141	67
733	36.5	0.5	2.7		139	68
734	36.6	0.5	2.7		137	67
735	36.6	0.5	2.6		135	68

736	36.6	0.5	2.6		133	67
737	36.5	0.4	2.5		132	67
738	36.5	0.5	2.6		130	67
739	36.6	0.4	2.5		129	67
740	36.4	0.4	2.5		127	68
741	36.5	0.4	2.5		126	67
742	36.5	0.4	2.4		125	67
743	36.5	0.4	2.4		123	67
744	36.5	0.4	2.4		123	67
745	36.4	0.4	2.4		121	68
746	36.5	0.4	2.4		120	68
747	36.6	0.4	2.4		119	67
748	36.5	0.4	2.3		118	67
749	36.6	0.4	2.3		117	68
750	36.5	0.4	2.3		117	68
751	36.3	0.4	2.3		115	68
752	36.4	0.4	2.3		115	68
753	36.4	0.4	2.3		114	67
754	36.5	0.4	2.3		113	68
755	36.5	0.4	2.3		112	68
756	36.4	0.4	2.4		139	68
757	36.3	0.6	2.9		170	68
758	36.2	0.6	1.9		154	68
759	36.4	0.6	1.7		140	68
760	36.3	0.5	1.5		131	68
761	36.3	0.4	1.4		126	68
762	36.4	0.4	1.3		122	68
763	36.3	0.4	1.3		120	68
764	36.3	0.3	1.3		118	69
765	36.3	0.3	1.3		117	68
766	36.2	0.3	1.3		115	68
767	36.2	0.3	1.3		114	68
768	36.2	0.3	1.3		113	68
769	36.3	0.3	1.4		112	68
770	36.2	0.3	1.4		111	68
771	36.3	0.3	1.5		110	67
772	36.3	0.3	1.6		109	68
773	36.2	0.3	1.6		108	68
774	36.3	0.3	1.7		108	68
775	36.1	0.3	1.7		107	68
776	36.3	0.3	1.7		106	67
777	36.2	0.3	1.7		105	67

778	36.3	0.3	1.7		104	67
779	36.3	0.3	1.7		104	67
780	36.2	0.3	1.7		103	67
781	36.2	0.3	1.8		102	67
782	36.2	0.3	1.8		102	67
783	36.2	0.3	1.8		102	67
784	36.2	0.3	1.8		101	66
785	36.3	0.3	1.8		100	66
786	36.3	0.3	1.8		100	66
787	36.3	0.3	1.8		100	66
788	36.3	0.3	1.8		136	66
789	36.1	0.3	1.9		146	66
790	36.1	0.2	1.0		129	66
791	36.2	0.2	0.8		119	66
792	36.1	0.2	0.7		113	66
793	36.2	0.2	0.6		110	66
794	36.1	0.2	0.6		107	66
795	36.0	0.1	0.6		105	66
796	36.2	0.1	0.5		104	66
797	36.2	0.1	0.5		102	66
798	36.2	0.1	0.5		101	66
799	36.1	0.1	0.5		101	66
800	36.2	0.1	0.6		100	66
801	36.1	0.1	0.6		99	66
802	36.1	0.1	0.6		98	66
803	36.2	0.1	0.6		98	66
804	36.1	0.1	0.7		98	67
805	36.2	0.1	0.7		97	67
806	36.1	0.1	0.7		96	67
807	36.3	0.1	0.7		96	67
808	36.1	0.1	0.7		95	67
809	36.2	0.1	0.8		95	66
810	36.2	0.1	0.8		95	66
811	36.2	0.1	0.9		94	66
812	36.1	0.1	0.9		93	66
813	36.1	0.1	0.9		93	66
814	36.2	0.1	0.9		92	66
815	36.1	0.1	0.9		92	66
816	36.2	0.1	1.0		92	66
817	36.1	0.1	1.0		91	66
818	36.2	0.3	2.3		136	66
819	36.1	0.2	1.1		153	66

820	36.1	0.5	1.2		163	66
821	35.9	1.1	2.0		173	66
822	35.8	1.9	3.6		186	66
823	35.6	1.7	4.2		203	66
824	35.4	2.0	5.9		218	66
825	35.2	2.1	6.9		230	66
826	34.9	2.2	7.8		241	66
827	34.7	2.2	8.7		251	66
828	34.4	2.2	9.7		261	66
829	34.0	2.0	10.3		272	66
830	33.9	1.1	12.4		288	66
831	33.5	0.4	13.6		304	66
832	33.0	0.2	14.4		316	66
833	32.7	0.1	14.7		324	66
834	32.3	0.1	15.1		333	66
835	31.8	0.1	15.5		341	66
836	31.4	0.1	15.9		347	66
837	30.8	0.1	16.3		354	66
838	30.5	0.1	16.9		361	66
839	29.9	0.1	16.9		366	66
840	29.4	0.1	17.0		370	66
841	28.9	0.1	16.6		373	66
842	28.4	0.1	17.2		378	66
843	27.9	0.1	17.0		381	66
844	27.4	0.1	17.1		385	67
845	26.8	0.1	17.0		387	67
846	26.5	0.1	17.0		389	67
847	26.0	0.1	16.9		388	67
848	25.6	0.0	16.6		368	67
849	25.5	0.0	14.5		330	68
850	25.2	0.1	15.5		309	67
851	24.9	0.3	15.5		295	67
852	24.9	0.5	16.1		282	67
853	24.6	0.2	14.2		271	67
854	24.6	0.1	12.5		262	67
855	24.7	0.1	11.1		255	67
856	24.6	0.1	9.9		247	67
857	24.5	0.1	8.5		241	67
858	24.4	0.2	7.4		235	67
859	24.4	0.2	6.4		230	67
860	24.5	0.3	5.5		227	67
861	24.4	0.3	3.9		224	67

862	24.3	0.3	2.7		221	67
863	24.2	0.6	3.3		216	67
864	24.3	1.0	4.2		212	67
865	24.3	1.3	5.1		208	67
866	24.3	1.6	5.8		203	67
867	24.1	1.8	6.4		199	67
868	24.3	1.9	6.6		195	67
869	24.2	2.0	6.7		191	67
870	24.3	2.0	6.9		188	67
871	24.2	2.0	6.8		185	67
872	24.3	2.1	7.0		182	67
873	24.4	2.0	6.8		178	67
874	24.2	2.0	6.7		175	67
875	24.1	1.9	6.4		172	67
876	24.2	1.8	6.1		170	67
877	24.3	1.8	6.0		167	67
878	24.2	1.8	6.0		164	67
879	24.1	1.6	5.5		162	67
880	24.3	1.6	5.5		159	67
881	24.2	1.6	5.5		157	68
882	24.3	1.6	5.4		154	68
883	24.2	1.5	5.1		152	68
884	24.2	1.5	4.9		150	68
885	24.3	1.6	5.2		148	67
886	24.3	1.5	5.0		146	67
887	24.2	1.4	4.8		144	67
888	24.2	1.4	4.6		142	67
889	24.2	1.3	4.5		141	67
890	24.3	1.4	4.6		156	67
891	24.1	2.1	7.1		192	67
892	24.1	1.1	4.4		183	67
893	24.0	1.0	3.7		168	67
894	24.0	0.9	3.5		157	67
895	24.1	0.7	3.3		151	67
896	23.8	0.7	3.3		147	67
897	23.9	0.6	3.1		143	66
898	23.9	0.6	3.0		141	66
899	23.9	0.5	2.9		138	66
900	24.0	0.5	2.8		136	66
901	23.9	0.5	2.7		134	66
902	23.9	0.4	2.6		132	66
903	23.9	0.4	2.4		130	66

904	23.9	0.4	2.4		129	66
905	23.9	0.4	2.2		128	66
906	24.0	0.4	2.1		126	66
907	24.0	0.3	2.1		125	66
908	24.0	0.3	2.0		123	66
909	24.0	0.3	1.9		122	67
910	24.0	0.3	2.0		121	67
911	23.8	0.3	2.0		120	67
912	23.9	0.3	1.9		119	67
913	23.9	0.3	1.9		118	67
914	23.9	0.3	2.0		117	67
915	23.9	0.3	1.9		115	67
916	23.9	0.3	1.9		114	67
917	24.0	0.3	1.9		114	67
918	23.9	0.3	1.9		113	66
919	23.8	0.3	1.9		112	66
920	24.0	0.3	1.8		111	66
921	24.1	0.3	1.8		110	66
922	23.9	0.3	1.7		151	66
923	23.8	0.2	1.6		172	66
924	23.8	0.5	1.8		149	66
925	23.8	0.4	1.6		137	66
926	23.9	0.0	0.1		129	66
927	23.7	0.3	1.3		125	66
928	23.9	0.3	1.3		121	66
929	23.8	0.3	1.3		119	66
930	23.8	0.2	1.2		117	66
931	23.9	0.2	1.1		115	66
932	23.9	0.2	1.0		114	66
933	23.9	0.2	1.0		112	66
934	23.9	0.2	0.9		111	66
935	23.8	0.2	0.9		110	66
936	23.7	0.2	0.9		109	66
937	23.9	0.1	0.9		108	66
938	23.9	0.1	0.9		107	66
939	23.8	0.1	0.9		107	66
940	23.8	0.1	0.9		106	66
941	23.9	0.1	0.9		105	66
942	23.9	0.1	0.9		104	66
943	23.8	0.1	0.9		103	66
944	23.9	0.1	0.9		102	67
945	23.9	0.1	0.9		102	66

946	23.9	0.1	1.0		101	66
947	24.0	0.1	1.0		100	66
948	23.9	0.1	1.0		100	67
949	23.7	0.1	1.1		99	67
950	23.9	0.1	1.1		99	67
951	23.9	0.1	1.1		99	67
952	23.8	0.1	1.1		98	66
953	23.8	0.1	1.2		100	66
954	24.0	0.5	4.5		144	66
955	23.9	0.1	1.0		140	66
956	23.8	0.0	0.6		125	66
957	23.8	0.0	0.5		117	67
958	23.8	0.0	0.4		112	66
959	23.9	0.0	0.4		108	66
960	23.8	0.0	0.3		106	66
961	23.9	0.0	0.3		105	67
962	23.8	0.0	0.3		103	67
963	23.9	0.0	0.3		102	67
964	23.8	0.0	0.3		101	67
965	23.9	0.0	0.3		101	67
966	23.9	0.0	0.3		100	67
967	23.9	0.0	0.3		99	67
968	23.8	0.0	0.3		99	67
969	23.8	0.0	0.3		98	67
970	23.7	0.0	0.3		97	67
971	23.9	0.0	0.4		97	67
972	23.8	0.0	0.4		96	67
973	23.8	0.0	0.4		95	67
974	23.8	0.0	0.4		95	67
975	23.9	0.0	0.4		94	67
976	23.9	0.0	0.4		94	67
977	23.8	0.0	0.4		93	67
978	23.8	0.0	0.5		93	67
979	23.8	0.0	0.5		92	67
980	23.8	0.0	0.5		92	67
981	23.8	0.0	0.5		92	67
982	23.7	0.0	0.5		92	67
983	23.9	0.0	0.5		91	67
984	23.9	0.1	0.5		91	67
985	23.8	0.1	0.6		117	67
986	23.7	0.2	2.6		140	67
987	23.8	0.1	0.8		123	67

988	23.8	0.1	0.7		113	67
989	23.8	0.0	0.6		125	67
990	23.6	0.3	1.6		152	67
991	23.5	0.7	2.0		165	67
992	23.4	1.2	3.6		178	67
993	23.2	2.7	6.6		199	67
994	23.1	2.7	7.0		216	67
995	22.7	3.0	8.3		229	67
996	22.3	3.2	9.1		240	67
997	22.1	3.2	9.8		251	67
998	21.9	3.0	10.8		264	67
999	21.5	2.3	11.8		276	67
1000	21.3	1.9	12.2		288	67
1001	21.0	1.8	12.5		298	67
1002	20.6	1.6	12.6		306	67
1003	20.1	1.4	12.5		313	67
1004	20.0	1.2	12.7		320	67
1005	19.6	1.3	12.6		324	67
1006	19.2	1.1	12.9		329	67
1007	18.9	0.8	13.6		336	68
1008	18.3	0.9	13.5		342	68
1009	18.0	0.6	13.7		346	67
1010	17.7	0.6	13.9		349	67
1011	17.4	0.6	13.7		350	67
1012	16.9	0.7	13.3		351	67
1013	16.5	1.2	12.8		352	67
1014	16.2	1.5	12.7		354	67
1015	15.7	1.2	12.8		356	68
1016	15.4	1.0	12.9		357	68
1017	14.9	1.2	12.5		359	68
1018	14.7	1.3	12.2		360	68
1019	14.5	1.3	11.9		329	68
1020	14.3	0.1	10.0		302	68
1021	14.2	0.1	10.7		287	68
1022	14.0	0.3	12.5		275	67
1023	14.0	0.2	12.2		265	68
1024	13.9	0.2	11.1		256	67
1025	13.9	0.1	9.8		248	67
1026	13.8	0.1	9.0		241	68
1027	13.8	0.2	8.1		235	68
1028	13.6	0.2	7.1		230	68
1029	13.6	0.3	6.5		225	68

1030	13.5	0.3	5.8		220	67
1031	13.6	0.3	5.2		217	67
1032	13.6	0.2	3.2		213	68
1033	13.5	0.3	2.6		209	67
1034	13.5	0.5	2.9		205	68
1035	13.5	0.8	3.5		202	67
1036	13.6	0.9	3.9		198	67
1037	13.5	1.1	4.5		194	68
1038	13.5	1.3	4.8		189	68
1039	13.6	1.4	5.2		186	68
1040	13.5	1.6	5.5		183	68
1041	13.4	1.6	5.5		179	68
1042	13.4	1.7	5.8		176	68
1043	13.6	1.8	6.0		173	68
1044	13.5	1.7	5.7		170	68
1045	13.5	1.6	5.5		167	68
1046	13.5	1.6	5.4		165	68
1047	13.4	1.5	5.1		162	68
1048	13.5	1.4	4.7		159	68
1049	13.5	1.4	4.8		157	67
1050	13.5	1.5	5.0		155	68
1051	13.4	1.5	5.0		153	68
1052	13.6	1.5	5.0		151	68
1053	13.4	1.6	5.0		149	68
1054	13.6	1.6	5.1		147	68
1055	13.5	1.7	5.2		145	68
1056	13.6	1.6	5.0		143	68
1057	13.6	1.7	5.3		141	68
1058	13.6	1.8	5.4		139	68
1059	13.4	1.8	5.4		138	68
1060	13.6	1.8	5.3		136	68
1061	13.6	1.7	5.3		165	68
1062	13.2	1.0	3.5		187	68
1063	13.3	0.5	2.3		168	68
1064	13.4	0.4	1.9		157	68
1065	13.4	0.4	1.8		149	68
1066	13.3	0.4	1.7		144	68
1067	13.3	0.4	1.9		140	68
1068	13.3	0.3	1.8		137	68
1069	13.4	0.3	1.9		135	68
1070	13.3	0.3	1.8		133	68
1071	13.3	0.3	1.9		131	68

1072	13.4	0.3	1.8		129	68
1073	13.4	0.3	1.8		128	68
1074	13.3	0.3	1.8		126	68
1075	13.3	0.3	1.8		125	68
1076	13.3	0.3	1.8		124	68
1077	13.4	0.3	1.8		123	68
1078	13.4	0.3	1.8		121	68
1079	13.3	0.3	1.8		120	68
1080	13.3	0.3	1.9		119	68
1081	13.5	0.3	1.8		118	68
1082	13.4	0.3	1.9		117	68
1083	13.4	0.3	1.8		116	68
1084	13.3	0.3	1.9		115	68
1085	13.3	0.3	1.8		114	68
1086	13.5	0.3	1.8		113	68
1087	13.4	0.3	1.8		112	67
1088	13.2	0.3	1.8		111	67
1089	13.3	0.3	1.9		110	67
1090	13.4	0.3	1.8		109	67
1091	13.3	0.3	1.8		108	67
1092	13.3	0.3	1.8		108	67
1093	13.3	0.6	3.7		150	67
1094	13.3	0.1	1.0		150	67
1095	13.3	0.0	0.4		135	67
1096	13.4	0.0	0.3		126	67
1097	13.4	0.0	0.3		121	66
1098	13.5	0.0	0.3		117	66
1099	13.3	0.0	0.3		115	66
1100	13.2	0.0	0.2		113	66
1101	13.3	0.0	0.3		111	67
1102	13.3	0.0	0.3		110	67
1103	13.2	0.0	0.3		109	66
1104	13.3	0.0	0.3		108	66
1105	13.4	0.0	0.3		107	67
1106	13.4	0.0	0.4		106	66
1107	13.4	0.0	0.4		105	67
1108	13.2	0.0	0.4		104	66
1109	13.3	0.0	0.4		104	66
1110	13.3	0.1	0.5		103	67
1111	13.3	0.1	0.5		102	67
1112	13.3	0.1	0.5		102	67
1113	13.3	0.1	0.6		101	67

1114	13.3	0.1	0.6		100	67
1115	13.3	0.1	0.6		100	67
1116	13.4	0.1	0.7		99	67
1117	13.3	0.1	0.7		98	67
1118	13.4	0.1	0.8		98	67
1119	13.5	0.1	0.8		97	67
1120	13.4	0.1	0.8		97	67
1121	13.4	0.1	0.8		96	67
1122	13.4	0.1	0.9		96	67
1123	13.4	0.1	0.9		96	67
1124	13.3	0.1	0.9		118	67
1125	13.4	0.3	2.6		145	67
1126	13.4	0.1	0.9		130	67
1127	13.4	0.1	0.8		118	67
1128	13.3	0.1	0.7		112	67
1129	13.3	0.1	0.6		108	67
1130	13.3	0.1	0.6		105	67
1131	13.2	0.1	0.5		103	67
1132	13.4	0.1	0.5		102	67
1133	13.3	0.1	0.4		101	67
1134	13.5	0.1	0.4		100	67
1135	13.4	0.1	0.4		99	67
1136	13.2	0.0	0.4		98	67
1137	13.1	0.0	0.4		97	68
1138	13.3	0.0	0.4		97	67
1139	13.4	0.0	0.4		96	68
1140	13.3	0.0	0.4		95	68
1141	13.5	0.0	0.3		95	68
1142	13.4	0.0	0.3		94	68
1143	13.3	0.0	0.3		94	68
1144	13.2	0.0	0.3		94	68
1145	13.3	0.0	0.3		96	68
1146	13.1	0.5	4.6		139	68
1147	13.2	0.2	1.3		155	68
1148	13.1	0.7	1.6		164	68
1149	13.0	1.0	2.2		172	68
1150	13.0	1.5	3.7		181	68
1151	12.7	2.0	5.6		197	67
1152	12.5	2.0	6.1		210	67
1153	12.1	2.4	7.1		221	67
1154	12.1	2.9	7.6		230	67
1155	11.8	3.0	7.9		238	67

1156	11.6	2.8	8.2		244	67
1157	11.3	2.6	8.4		250	67
1158	11.1	2.6	8.4		254	67
1159	10.8	2.6	8.7		258	67
1160	10.6	2.1	9.5		270	67
1161	10.3	1.5	11.7		281	67
1162	10.0	1.6	10.9		286	67
1163	9.7	1.7	10.6		290	66
1164	9.5	1.4	10.8		294	66
1165	9.1	1.5	10.3		297	66
1166	8.8	1.5	10.2		298	67
1167	8.6	1.6	9.9		299	66
1168	8.2	1.4	9.9		299	66
1169	7.9	1.3	9.8		299	66
1170	7.6	1.3	9.8		300	66
1171	7.3	1.3	9.8		302	66
1172	7.1	1.3	9.8		302	66
1173	6.8	1.4	9.8		302	66
1174	6.7	1.4	9.8		304	66
1175	6.2	1.2	9.7		306	66
1176	6.0	1.2	9.6		307	66
1177	5.8	1.2	9.4		308	66
1178	5.5	1.4	9.5		309	66
1179	5.3	1.5	9.3		308	66
1180	4.9	1.4	9.3		308	66
1181	4.6	1.4	9.1		308	66
1182	4.4	1.3	9.0		308	66
1183	4.2	1.3	8.9		308	66
1184	4.1	1.2	8.8		295	66
1185	3.9	0.8	4.5		271	66
1186	3.8	0.7	4.8		258	66
1187	3.7	0.6	5.6		249	66
1188	3.7	0.5	6.3		241	66
1189	3.5	0.4	6.0		234	66
1190	3.7	0.5	5.5		227	66
1191	3.6	0.5	5.1		222	66
1192	3.6	0.5	4.8		217	66
1193	3.6	0.6	4.4		213	66
1194	3.6	0.6	4.1		208	66
1195	3.6	0.7	3.6		205	65
1196	3.7	0.8	3.3		201	66
1197	3.6	0.6	2.3		196	65

1198	3.6	0.4	1.6		192	65
1199	3.6	0.3	1.3		188	66
1200	3.6	0.3	1.2		184	65
1201	3.6	0.3	1.3		181	66
1202	3.6	0.3	1.5		177	65
1203	3.6	0.3	1.5		174	66
1204	3.7	0.4	1.7		171	66
1205	3.7	0.4	1.8		168	66
1206	3.7	0.4	2.0		165	66
1207	3.7	0.4	2.0		163	66
1208	3.6	0.4	2.0		160	66
1209	3.6	0.4	2.1		157	66
1210	3.8	0.4	2.0		155	66
1211	3.8	0.4	2.1		153	66
1212	3.8	0.4	2.1		150	66
1213	3.6	0.4	2.0		148	66
1214	3.8	0.4	2.1		146	66
1215	3.9	0.4	2.0		144	66
1216	3.7	0.4	2.0		142	66
1217	3.7	0.4	2.0		140	66
1218	3.9	0.4	2.1		138	66
1219	3.7	0.4	2.0		137	66
1220	3.8	0.4	2.1		135	66
1221	3.7	0.5	2.1		133	66
1222	3.8	0.4	2.0		131	69
1223	3.7	0.4	2.0		130	67
1224	3.8	0.4	2.0		128	67
1225	3.7	0.4	2.0		127	67
1226	3.8	0.5	2.0		142	67
1227	3.7	1.1	3.7		172	67
1228	3.8	0.1	0.6		161	67
1229	3.8	0.1	0.4		148	67
1230	3.7	0.1	0.4		140	67
1231	3.8	0.1	0.4		135	66
1232	3.8	0.1	0.4		132	66
1233	3.8	0.1	0.4		129	66
1234	3.7	0.1	0.4		127	66
1235	3.8	0.1	0.5		125	66
1236	3.9	0.1	0.5		123	66
1237	3.9	0.1	0.5		122	66
1238	3.9	0.1	0.5		120	66
1239	3.9	0.1	0.5		119	66

1240	3.9	0.1	0.5		117	66
1241	3.8	0.1	0.5		116	66
1242	3.8	0.1	0.5		115	66
1243	3.9	0.1	0.5		114	66
1244	3.8	0.1	0.5		113	66
1245	3.7	0.0	0.5		112	66
1246	3.9	0.0	0.5		111	66
1247	3.9	0.0	0.5		110	66
1248	3.8	0.0	0.5		109	66
1249	3.9	0.0	0.4		108	66
1250	3.8	0.0	0.4		108	66
1251	3.8	0.0	0.4		107	66
1252	4.0	0.0	0.4		106	66
1253	3.8	0.0	0.4		106	66
1254	4.0	0.0	0.4		105	65
1255	4.0	0.0	0.4		104	65
1256	3.8	0.0	0.4		103	65
1257	3.8	0.0	0.4		102	65
1258	4.0	0.1	0.6		133	65
1259	3.9	0.1	1.3		145	65
1260	3.9	0.0	0.4		130	65
1261	3.9	0.0	0.3		120	65
1262	3.8	0.0	0.3		115	65
1263	3.9	0.0	0.3		111	65
1264	3.8	0.0	0.2		108	65
1265	3.9	0.0	0.2		106	66
1266	3.9	0.0	0.2		105	65
1267	3.9	0.0	0.2		104	65
1268	4.0	0.0	0.2		103	66
1269	3.9	0.0	0.2		102	65
1270	3.9	0.0	0.2		101	66
1271	3.9	0.0	0.2		100	65
1272	3.9	0.0	0.2		100	65
1273	4.0	0.0	0.2		99	66
1274	4.1	0.0	0.2		129	66
1275	4.0	0.0	0.6		149	66
1276	3.8	0.0	0.4		156	66
1277	3.9	0.1	0.5		160	66
1278	3.8	0.2	0.9		163	66
1279	3.8	0.5	1.6		167	66
1280	3.6	0.9	2.5		172	66
1281	3.5	1.2	3.7		178	67

1282	3.3	1.6	4.9		184	66
1283	3.2	2.0	6.0		196	66
1284	3.1	1.6	5.3		206	66
1285	2.8	1.8	5.9		213	66
1286	2.8	2.0	6.3		221	66
1287	2.6	1.9	6.6		229	67
1288	2.3	1.8	7.5		237	66
1289	2.1	1.8	7.6		244	67
1290	2.0	1.6	7.5		248	67
1291	1.9	1.5	7.6		251	67
1292	1.7	1.6	7.4		253	67
1293	1.5	1.6	7.1		253	67
1294	1.4	1.7	6.9		254	68
1295	1.2	1.7	6.8		254	68
1296	1.2	1.6	6.6		254	68
1297	0.9	1.6	6.6		255	70
1298	0.7	1.5	6.5		255	69
1299	0.6	1.4	6.4		255	69
1300	0.0	1.5	6.5		256	68
1301	0.0	1.5	6.4		257	68

OMNI-Test Laboratories, Inc.

ASTM E2618 Wood Heater Run Sheets

Client: Central Boiler Project Number: 0117WB040E Run Number: 2
Model: Edge 360 Tracking Number: 2399 Date: 12/10/19
Test Crew: D. Davis
OMNI Equipment ID numbers:

Wood Heater Supplemental Data

Start Time: 14:39 Booth #: E8
Stop Time: 1801 minutes

Stack Gas Leak Check:
Initial: good Final: good

Sample Train Leak Check:
A: 0.0 @ 7 "Hg
B: 0.0 @ 8 "Hg

Calibrations: Span Gas CO_2: 17.06 CO: 4.29

	Pre Test		Post Test	
	Zero	Span	Zero	Span
Time	1425	1425	1232	1232
CO_2	-0.00	17.03	0.02	16.92
CO	-0.00	4.27	-0.00	4.24

Air Velocity (ft/min): Initial: <50 Final: <50
Scale Audit (lbs): Initial: 10.0 Final: 10.0
Pitot Tube Leak Test: Initial: good Final: good
Stack Diameter (in): 6"
Induced Draft: 0.0
% Smoke Capture: 100 %
Flue Pipe Cleaned Prior to First Test in Series:
Date: 12/6/19 Initials: BA

	Initial	Middle	Ending
P_b (in/Hg)	30.22		30.08
RH (%)	19.1		21.2
Ambient (°F)	67		68

Tunnel Traverse

Microtector Reading	dP (in H_2O)	T(°F)
1	.010	71
2	.014	71
3	.015	71
4	.014	71
5	.014	71
6	.010	71
1	.012	71
2	.014	71
3	.014	71
4	.014	71
5	.014	71
6	.011	71
Center:		
	.015	71

Background Filter Volume: 296.377

Tunnel Static Pressure (in H_2O):	
Beginning of Test	End of Test
-.184	-.184

Technician Signature: [signature] Date: 1/8/20

OMNI-Test Laboratories, Inc.

ASTM E2618 Wood Heater Run Sheets

Client: Central Boiler Project Number: 0117WB040E Run Number: 2
Model: Edge 360 Tracking Number: 2399 Date: 12/10/19
Test Crew: A Davis
OMNI Equipment ID numbers:

Wood Heater Run Notes

Air Control Settings

Primary:

Target BTU: ≈ 32,000

Secondary: fixed

Tertiary/Pilot: N/A

Fan: Automatic

Preburn Notes

Time	Notes
0	Burned Approx 130 lbs of preburn fuel @ max output, turned down heat draw to ≈ 32,000 and started preburn. Tare 15.0 lbs

Test Notes

Sketch test fuel configuration:

See photo

Start up procedures & Timeline:

Bypass: N/A
Fuel loaded by: 85 seconds
Door closed at: 90 seconds
Primary air: Heat draw ≈ 32,000 BTU/h

Notes:

Time	Notes
60	changed front filter in tray A

Technician Signature: [signature] Date: 1/9/20

Run 3

Hydronic Heating Appliances - Test Method ASTM 2618
Results

Manufacturer: Central Boiler
Model: Edge 360
Tracking No.: 2399
Project No.: 0117WB040E
Run: 3
Test Date: December 11, 2019

Burn Rate	**2.21 kg/hr dry**
Average Tunnel Temperature	78 degrees F
Average Gas Velocity in Dilution Tunnel - vs	7.2 feet/second
Average Gas Flow Rate in Dilution Tunnel - Qsd	19686 dscf/hour
Average Delta p	0.013 inches H20
Average Delta H	1.33 inches H20
Total Time of Test	1238 minutes

PARTICULATE EMISSIONS RESULTS

First Hour:	**0.39** g/hr
	0.15 g/kg
	0.02 lb/mmBTU output
Complete Run:	**1.91** g/hr
	0.86 g/kg
	0.12 lb/mmBTU output

	SAMPLE TRAIN 1	SAMPLE TRAIN 2	AMBIENT SAMPLE TRAIN
Total Sample Volume - Vm	198.95 cubic feet	200.40 cubic feet	267.38 cubic feet
Average Gas Meter Temperature	79 degrees F	78 degrees F	67 degrees F
Total Sample Volume (Standard Conditions) - Vmstd	197.9 dscf	195.7 dscf	265.9 dscf
Total Particulates - mn	19.1 mg	19.6 mg	0.4 mg
Particulate Concentration (dry-standard)	0.00010 grams/dscf	0.00010 grams/dscf	0.000002 grams/dscf
Particulate Emissions	38.59 grams	40.06 grams	
Difference from Average	0.74 grams	0.74 grams	

Results Are Acceptable

	AVERAGE
Total Sample Volume - Vm	199.68 cubic feet
Average Gas Meter Temperature	79 degrees F
Total Sample Volume (Standard Conditions) - Vmstd	196.8 dscf
Particulate Concentration (dry-standard)	0.00010 grams/dscf
Particulate Emissions	39.33 grams
7.5% of the average particulate emissions	2.95 grams

ADDITIONAL ACCEPTANCE CRITERIA

Boiler Water Return Temperature >120 °F	**Acceptable**
Proportional Rate Variation >80%	**Acceptable**
90% of PR Values between 90-110%	**Acceptable**

	SAMPLE TRAIN 1 - FIRST HOUR
Total Sample Volume - Vm	9.43 cubic feet
Average Gas Meter Temperature	74 degrees F
Total Sample Volume (Standard Conditions) - Vmstd	9.43 dscf
Total Particulates - mn	0.2 mg
Particulate Concentration (dry-standard)	0.00002 grams/dscf
Particulate Emissions	0.39 grams
Burn Rate	2.62 (dry kg/hr)
Heat Output Rate	34400 BTU/hr

Hydronic Heating Appliances
Results

Manufacturer:	Central Boiler	Equipment Numbers:	
Model:	Edge 360		
Tracking No.:	2399		
Project No.:	0117WB040E		
Run #:	3		
Date:	12/11/19		

TRAIN 1 (First Hour emissions)

Sample Component	Reagent	Filter, Probe or Dish #	Weights		
			Final, mg	Tare, mg	Particulate, mg
B. Front filter catch	Filter	D942	119.1	118.9	0.2
C. Rear filter catch	Filter				0.0
D. Probe catch*	Probe				0.0
E. Filter seals catch*	Seals				0.0

Sub-Total	Total Particulate, mg:	0.2

TRAIN 1 (Post First Hour Change-out)

Sample Component	Reagent	Filter, Probe or Dish #	Weights		
			Final, mg	Tare, mg	Particulate, mg
B. Front filter catch	Filter	D943	134.0	118.1	15.9
C. Rear filter catch	Filter	D944	117.3	117.5	-0.2
D. Probe catch*	Probe	13	114323.5	114321.4	2.1
E. Filter seals catch*	Seals	R905	4126.2	4125.1	1.1

Sub-Total	Total Particulate, mg:	18.9
Train 1 Aggregate	Total Particulate, mg:	19.1

TRAIN 2

Sample Component	Reagent	Filter, Probe or Dish #	Weights		
			Final, mg	Tare, mg	Particulate, mg
A. Front filter catch	Filter	D945	132.4	116.9	15.5
B. Rear filter catch	Filter	D946	116.9	116.9	0.0
C. Probe catch*	Probe	14	114550.0	114547.8	2.2
D. Filter seals catch*	Seals	R906	3364.1	3362.2	1.9

Total Particulate, mg:	19.6

AMBIENT

Sample Component	Reagent	Filter # or Probe #	Weights		
			Final, mg	Tare, mg	Particulate, mg
A. Front filter catch*	Filter	D947	116.4	116.0	0.4

Total Particulate, mg:	0.4

*Particulate catch that results in a negative number, is assumed to be zero for probes and seals, negative numbers for filters are assumed to be part of the seal weight.

Component	Equations:
A. Front filter catch	Final (mg) - Tare (mg) = Particulate, mg
B. Rear filter catch	Final (mg) - Tare (mg) = Particulate, mg
C. Probe catch	Final (mg) - Tare (mg) = Particulate, mg

Hydronic Heating Appliances
Fuel Moisture

Manufacturer:	Central Boiler
Model:	Edge 360
Tracking No.:	2399
Project No.:	0117WB040E
Technician:	B. Davis
Run #:	3
Test Date:	December 11, 2019

Wet Weight (lb)	% Moisture				
7.3	18	21.5	22.4	25.2	25.2
9.1	24.5	23.3	20.2	22.6	19.4
9.3	22.6	21.7	20.2	23.1	19.5
10.2	24.5	24.8	20	25.8	22.5
9.9	22.5	21.9	18.3	22.5	19.2
10.2	24.5	21.7	22	23.4	21.5
10	25.4	23.3	19.4	22.6	20
9.5	22.8	19.3	19.5	20.2	26.5
9.5	23.9	23.6	19.2	22.6	19.1
10.3	22.3	22.3	18.8	23.1	20.1
7.6	23.8	21.3	23.7	21.6	22.5
10.1	18.1	24.5	24.8	19.2	27.6
10	24.9	26.4	21.4	24.9	19.5

Total Weight of Load (lb): 123

Total Moisture of Load (%): 22.2

Equipment Numbers:

Hydronic Heating Appliances
Test Data

Run: 3

Manufacturer: Central Boiler
Model: Edge 360
Tracking No.: 2399
Project No.: 0117WB040E
Test Date: December 11, 2019
Technician: B. Davis
Beginning Clock Time: 18:16
Recording Interval: 1 min.
Total Sampling Time: 1238 min.

Velocity Traverse Data

	Pt.1	Pt.2	Pt.3	Pt.4	Pt.5	Pt.6	Pt.7	Pt.8	Pt.9	Pt.10	Pt.11	Pt.12	Center	
Initial dP	0.010	0.014	0.014	0.012	0.014	0.010	0.008	0.012	0.014	0.016	0.016	0.012	0.014	"H2O
Initial Temp.	78	78	78	78	78	78	78	78	78	78	78	78	78	

Air Velocity: Initial: <50 Final: <50 V_{strav} 7.49 ft/sec
Scale Audit: Pre: 10.0 Post: 10.0 Induced Draft: 0 V_{scent} 7.91 ft/sec
Pitot Tube Leak Test: Pre: 0 Post: 0 % Smoke Capture: 100 F_p 0.946
Flue Pipe Cleaned Prior to First Test in Series: Date:

PM Control Module: 335, 336
Dilution Tunnel MW(dry): 29.00 lb/lb-mole
Dilution Tunnel MW(wet): 28.78 lb/lb-mole
Dilution Tunnel H2O: 2.00 percent
Dilution Tunnel Static: -0.184 "H2O
Pitot Tube Cp: 0.99 78

	(1)	(2)	(amb)
Meter Box Y Factor:	1.009	0.99	0.988

Barometric Pressure:	Begin	Middle	End	Average	
	29.95	30.04	30.12	30.04	"Hg

Tunnel Velocity: 7.22 ft/sec.
Intial Tunnel Flow: 340.4 scfm
Average Tunnel Flow: 328.1 scfm
Tunnel Area: 0.785 ft2
Post-Test Leak Check (1): 0.000 cfm @ 10 in. Hg
Post-Test Leak Check (2): 0.000 cfm @ 8 in. Hg
Fuel Moisture (dry basis %): 22.2
Total Particulate (1): 19.1
Total Particulate (2): 19.6

Elapsed Time	Particulate Sampling Data: Gas Meter Cubic Feet (1)	Gas Meter Cubic Feet (2)	Gas Meter Cubic Feet (amb)	Sample Rate, cfm (1)	Sample Rate, cfm (2)	Orifice dH (1)	Orifice dH (2)	Orifice dH (amb)	Meter oF (1)	Meter oF (2)	Meter oF (amb)	Meter Vac. in. Hg. (1)	Meter Vac. in. Hg. (2)	Dilution Tunnel Temp.	Dilution Tunnel dP	Pro. Rate (%) (1)	Pro. Rate (%) (2)	Fuel Weight, lb: Scale Reading	Weight Change	Flow, gpm: Load Side Liquid Flow Rate	Boiler Side Liquid Flow Rate (optional)	Temperature Data, oF: Thermopile ΔT	Boiler to Heat Exch. Temp.	Heat Exch to Boiler Temp.	Inlet Load Temp.	Outlet Load Temp.	Stack	Filter (1)	Filter (2)	Ambient	Specific Heat of Inlet Water (BTU/lb-°F)	Mass Flow Rate of Inlet Water (lb/min)	Heat Output, Btu
0	0.000	0.000	0			0.77	0.79	0.23	71	71	67	1.87	1.4	99	0.014			123.0		0.70		112.34	170.38	166.21	57.30	169.64	320	70	70	67			
1	0.148	0.157		0.15	0.16	1.34	1.10	0.23	71	71	67	1.91	1.4	89	0.015	88	93	122.6	0.38	0.70		113.55	171.38	167.34	57.30	170.85	295	71	71	67	1.001	5.842	664
2	0.291	0.301		0.14	0.14	1.34	1.08	0.23	71	71	67	1.91	1.3	95	0.012	96	96	122.0	0.65	0.70		113.92	171.66	167.58	57.30	171.22	317	71	71	67	1.001	5.839	666
3	0.443	0.456		0.15	0.16	1.34	1.08	0.23	71	71	67	1.91	1.4	98	0.012	102	103	121.5	0.45	0.72		114.69	172.61	168.39	57.27	171.96	330	72	72	67	1.001	6.004	689
4	0.602	0.617		0.16	0.16	1.33	1.08	0.23	72	71	67	1.92	1.4	100	0.014	99	99	121.1	0.41	0.68		115.94	173.81	169.62	57.22	173.16	337	73	72	67	1.001	5.678	659
5	0.761	0.778		0.16	0.16	1.32	1.08	0.23	72	71	67	1.91	1.4	101	0.012	107	107	120.4	0.70	0.72		117.16	175.03	170.77	57.13	174.30	342	73	73	67	1.001	6.001	704
6	0.919	0.940		0.16	0.16	1.32	1.07	0.23	72	71	67	1.92	1.4	101	0.014	98	100	119.7	0.68	0.70		118.42	176.04	171.85	57.05	175.47	346	73	73	67	1.001	5.842	693
7	1.077	1.100		0.16	0.16	1.32	1.08	0.23	72	71	67	1.91	1.4	102	0.015	95	96	119.3	0.40	0.70		119.68	177.19	172.95	56.94	176.62	350	73	73	67	1.001	5.839	700
8	1.235	1.260		0.16	0.16	1.32	1.08	0.23	72	71	67	1.91	1.4	103	0.014	98	99	118.9	0.46	0.72		120.71	178.14	173.84	56.83	177.54	354	73	73	67	1.001	6.002	725
9	1.393	1.422		0.16	0.16	1.32	1.07	0.23	72	71	67	1.9	1.4	104	0.012	106	108	118.4	0.46	0.60		121.62	178.99	174.97	56.74	178.35	358	74	73	67	1.001	5.029	612
10	1.551	1.582		0.16	0.16	1.32	1.06	0.23	72	72	66	1.9	1.4	104	0.013	102	103	117.9	0.52	0.62		122.99	180.26	176.56	56.65	179.64	361	74	74	66	1.001	5.194	640
11	1.710	1.742		0.16	0.16	1.32	1.06	0.23	72	72	66	1.9	1.4	104	0.014	99	99	117.3	0.54	0.60		124.21	181.42	177.66	56.62	180.83	364	74	74	66	1.001	5.030	625
12	1.868	1.903		0.16	0.16	1.30	1.07	0.23	72	72	66	1.91	1.4	105	0.013	102	103	117.1	0.27	0.60		125.50	182.67	179.11	56.58	182.08	367	74	74	66	1.001	5.035	633
13	2.025	2.063		0.16	0.16	1.31	1.06	0.23	72	72	66	1.92	1.4	106	0.014	98	99	116.5	0.60	0.53		126.46	183.77	180.35	56.59	183.05	370	74	74	66	1.001	4.384	555
14	2.183	2.223		0.16	0.16	1.31	1.07	0.23	72	72	66	1.89	1.4	98	0.014	98	98	116.3	0.15	0.56		127.52	184.95	181.65	56.69	184.21	340	74	74	66	1.001	4.693	599
15	2.340	2.383		0.16	0.16	1.32	1.06	0.23	72	72	66	1.88	1.4	85	0.016	90	91	116.1	0.21	0.54		128.11	185.47	182.24	56.88	184.99	311	72	73	66	1.001	4.522	580
16	2.498	2.544		0.16	0.16	1.31	1.06	0.23	73	72	67	1.9	1.4	81	0.014	96	97	116.1	0.02	0.56		128.29	185.86	182.65	57.09	185.38	294	72	72	67	1.001	4.667	599
17	2.657	2.704		0.16	0.16	1.32	1.06	0.23	73	72	66	1.89	1.4	78	0.015	93	93	116.0	0.08	0.55		128.19	185.87	182.69	57.32	185.51	280	71	72	66	1.001	4.601	590
18	2.815	2.865		0.16	0.16	1.31	1.07	0.23	73	72	67	1.89	1.4	77	0.013	100	101	116.0	0.07	0.74		128.04	186.00	181.89	57.55	185.59	269	71	71	67	1.001	6.144	788
19	2.974	3.027		0.16	0.16	1.30	1.07	0.23	73	73	67	1.88	1.4	76	0.014	96	97	116.1	-0.12	0.49		127.55	185.90	182.70	57.83	185.38	260	71	71	67	1.001	4.062	519
20	3.131	3.187		0.16	0.16	1.31	1.06	0.23	73	73	67	1.87	1.4	76	0.014	95	96	115.9	0.14	0.47		127.60	186.00	182.94	58.02	185.62	252	71	71	67	1.001	3.897	498
21	3.289	3.347		0.16	0.16	1.31	1.06	0.23	73	73	67	1.86	1.4	75	0.013	99	100	116.0	-0.04	0.51		127.41	186.12	183.04	58.21	185.61	245	70	71	67	1.001	4.221	538
22	3.447	3.509		0.16	0.16	1.31	1.07	0.23	73	73	67	1.86	1.4	76	0.014	96	97	115.9	0.04	0.49		127.17	186.10	183.04	58.41	185.57	239	70	71	67	1.001	4.054	516
23	3.605	3.670		0.16	0.16	1.31	1.06	0.23	74	73	67	1.88	1.4	76	0.014	96	97	116.0	-0.08	0.49		126.91	185.98	182.97	58.60	185.51	233	70	71	67	1.001	4.060	516
24	3.764	3.831		0.16	0.16	1.30	1.06	0.23	74	73	67	1.87	1.4	75	0.013	100	100	116.0	0.00	0.51		126.69	186.07	182.92	58.74	185.43	227	70	71	67	1.001	4.219	535
25	3.922	3.991		0.16	0.16	1.30	1.06	0.23	74	73	67	1.87	1.4	75	0.014	96	96	115.9	0.10	0.49		126.80	186.01	182.97	58.70	185.50	223	70	71	67	1.001	4.060	515
26	4.080	4.153		0.16	0.16	1.30	1.06	0.23	74	74	67	1.87	1.4	74	0.013	99	101	115.9	0.04	0.51		126.78	185.89	182.78	58.62	185.40	220	70	70	67	1.001	4.223	536
27	4.238	4.313		0.16	0.16	1.30	1.06	0.23	74	74	67	1.88	1.4	73	0.014	95	96	116.0	-0.16	0.51		126.78	185.77	182.71	58.51	185.30	216	70	70	67	1.001	4.225	536
28	4.395	4.474		0.16	0.16	1.30	1.06	0.23	74	74	67	1.88	1.4	73	0.012	102	104	115.9	0.10	0.49		126.82	185.75	182.73	58.43	185.25	212	70	70	67	1.001	4.063	516
29	4.554	4.635		0.16	0.16	1.30	1.07	0.23	74	74	67	1.88	1.4	72	0.013	100	100	116.1	-0.19	0.51		126.81	185.69	182.66	58.42	185.22	208	69	70	67	1.001	4.218	536
30	4.712	4.797		0.16	0.16	1.31	1.06	0.23	75	74	66	1.88	1.4	72	0.012	103	105	116.1	-0.02	0.49		126.84	185.62	182.55	58.37	185.21	204	69	70	66	1.001	4.052	515
31	4.871	4.957		0.16	0.16	1.30	1.06	0.23	75	74	67	1.86	1.4	72	0.014	96	96	116.0	0.10	0.49		126.80	185.59	182.52	58.36	185.15	199	69	70	67	1.001	4.066	516
32	5.029	5.118		0.16	0.16	1.29	1.06	0.23	75	74	67	1.88	1.4	71	0.014	95	96	115.9	0.12	0.49		126.69	185.46	182.41	58.31	185.00	196	69	70	67	1.001	4.056	515
33	5.187	5.280		0.16	0.16	1.30	1.06	0.23	75	75	67	1.87	1.4	71	0.014	95	97	116.0	-0.12	0.49		126.58	185.30	182.31	58.26	184.85	192	69	69	67	1.001	4.061	515
34	5.345	5.441		0.16	0.16	1.30	1.06	0.23	75	75	66	1.87	1.4	71	0.013	99	100	116.0	0.04	0.53		126.57	185.23	182.21	58.18	184.75	189	69	69	66	1.001	4.380	555
35	5.503	5.601		0.16	0.16	1.30	1.06	0.23	75	75	66	1.86	1.4	71	0.014	95	95	116.1	-0.13	0.51		126.49	185.01	182.00	58.11	184.60	185	69	69	66	1.001	4.219	534
36	5.662	5.763		0.16	0.16	1.30	1.07	0.23	75	75	66	1.87	1.4	71	0.013	99	100	116.1	0.00	0.53		126.35	184.85	181.80	58.03	184.38	181	69	69	66	1.001	4.383	554
37	5.821	5.925		0.16	0.16	1.30	1.06	0.23	75	75	66	1.87	1.4	71	0.013	99	100	116.2	-0.06	0.50		126.25	184.78	181.77	57.96	184.21	178	68	69	66	1.001	4.176	528
38	5.980	6.086		0.16	0.16	1.31	1.07	0.23	76	75	66	1.87	1.4	71	0.013	99	100	116.0	0.17	0.49		126.16	184.60	181.59	57.89	184.06	175	68	69	66	1.001	4.062	513
39	6.142	6.247		0.16	0.16	1.21	1.07	0.23	76	75	66	1.78	1.4	71	0.015	94	93	116.0	0.00	0.49		126.09	184.47	181.48	57.86	183.94	172	68	69	66	1.001	4.062	513
40	6.294	6.409		0.15	0.16	1.21	1.06	0.23	76	75	66	1.79	1.4	70	0.014	91	97	116.0	0.04	0.51		125.95	184.35	181.38	57.90	183.84	169	68	69	66	1.001	4.225	533
41	6.447	6.571		0.15	0.16	1.21	1.08	0.23	76	75	66	1.79	1.4	70	0.013	95	100	116.2	-0.18	0.51		125.67	184.13	181.19	58.00	183.66	166	68	68	66	1.001	4.226	532
42	6.600	6.733		0.15	0.16	1.21	1.08	0.23	76	75	66	1.8	1.4	71	0.013	95	100	116.0	0.13	0.49		125.44	183.98	181.04	58.14	183.58	164	68	68	66	1.001	4.065	511
43	6.753	6.896		0.15	0.16	1.21	1.08	0.23	76	75	66	1.79	1.4	70	0.014	92	97	116.0	0.08	0.51		125.03	183.71	180.82	58.29	183.32	161	68	68	66	1.001	4.231	530
44	6.905	7.059		0.15	0.16	1.21	1.08	0.23	76	76	66	1.8	1.4	70	0.015	88	94	116.0	-0.03	0.49		124.70	183.54	180.62	58.45	183.15	159	68	68	66	1.001	4.065	508
45	7.059	7.222		0.15	0.16	1.21	1.08	0.23	76	76	66	1.8	1.4	70	0.014	92	97	116.0	-0.05	0.49		124.21	183.30	180.35	58.60	182.81	156	68	68	66	1.001	4.063	505
46	7.211	7.385		0.15	0.16	1.21	1.08	0.23	76	76	66	1.79	1.4	70	0.014	91	97	116.2	-0.20	0.49		123.93	183.23	180.28	58.76	182.69	154	68	68	66	1.001	4.069	505
47	7.365	7.547		0.15	0.16	1.21	1.08	0.23	76	76	66	1.8	1.4	71	0.013	96	100	116.1	0.11	0.49		123.85	183.05	180.22	58.93	182.78	151	68	68	66	1.001	4.068	504
48	7.518	7.710		0.15	0.16	1.21	1.08	0.23	76	76	66	1.79	1.4	71	0.014	92	97	116.2	-0.11	0.55		123.35	182.88	179.95	59.10	182.45	149	68	68	66	1.001	4.550	562

Elapsed Time	Particulate Sampling Data																	Fuel Weight, lb		Flow, gpm		Temperature Data, oF													
	Gas Meter Cubic Feet (1)	Gas Meter Cubic Feet (2)	Gas Meter Cubic Feet (amb)	Sample Rate, cfm (1)	Sample Rate, cfm (2)	Orifice dH (1)	Orifice dH (2)	Orifice dH (amb)	Meter oF (1)	Meter oF (2)	Meter oF (amb)	Meter Vac. In. Hg. (1)	Meter Vac. In. Hg. (2)	Dilution Tunnel Temp.	Dilution Tunnel dP	Pro. Rate (%) (1)	Pro. Rate (%) (2)	Scale Reading	Weight Change	Load Side Liquid Flow Rate	Boiler Side Liquid Flow Rate (optional)	Thermopile ΔT	Boiler to Heat Exch. Temp.	Heat Exch to Boiler Temp.	Inlet Load Temp.	Outlet Load Temp.	Stack	Filter (1)	Filter (2)	Ambient		Specific Heat of Inlet Water (BTU/lb-°F)	Mass Flow Rate of Inlet Water (lb/min)	Heat Output, Btu
49	7.671	7.872		0.15	0.16	1.22	1.08	0.23	76	76	66	1.79	1.4	71	0.013	95	100	116.0	0.21	0.47		122.98	182.60	179.73	59.27	182.25	147	68	68	66		1.001	3.903	481
50	7.825	8.035		0.15	0.16	1.21	1.08	0.23	77	76	66	1.79	1.4	71	0.014	92	97	116.1	-0.05	0.49		122.52	182.41	179.55	59.43	181.95	145	68	68	66		1.001	4.062	498
51	7.983	8.197		0.16	0.16	1.33	1.07	0.23	77	76	67	1.9	1.4	71	0.015	91	93	116.1	-0.01	0.47		122.14	182.10	179.20	59.57	181.71	143	68	68	67		1.001	3.906	478
52	8.143	8.359		0.16	0.16	1.33	1.08	0.23	77	76	67	1.89	1.4	71	0.014	96	96	116.2	-0.09	0.45		121.70	182.00	179.55	59.72	181.43	141	68	68	67		1.001	3.743	456
53	8.304	8.522		0.16	0.16	1.33	1.08	0.23	77	76	67	1.91	1.4	71	0.012	104	105	116.2	-0.05	0.66		121.61	181.62	177.75	59.78	181.39	139	68	68	67		1.001	5.516	672
54	8.464	8.686		0.16	0.16	1.33	1.08	0.23	77	76	67	1.89	1.4	71	0.014	96	98	116.2	0.04	0.70		120.89	180.80	176.85	59.81	180.71	138	68	68	67		1.001	5.842	707
55	8.625	8.848		0.16	0.16	1.32	1.07	0.23	77	77	67	1.9	1.4	71	0.014	97	96	116.1	0.08	0.68		120.45	180.43	176.34	59.71	180.16	136	68	68	67		1.001	5.661	683
56	8.786	9.010		0.16	0.16	1.33	1.07	0.23	77	77	67	1.89	1.4	72	0.016	90	90	116.1	-0.03	0.70		120.17	179.98	175.93	59.57	179.74	163	68	68	67		1.001	5.838	702
57	8.946	9.172		0.16	0.16	1.33	1.07	0.23	77	77	67	1.9	1.4	80	0.013	100	101	115.9	0.25	0.68		120.01	179.76	175.74	59.47	179.48	196	68	69	67		1.001	5.675	682
58	9.107	9.335		0.16	0.16	1.33	1.08	0.23	77	77	67	1.89	1.4	76	0.014	97	97	116.0	-0.07	0.70		119.89	179.60	175.53	59.39	179.27	174	68	69	67		1.001	5.836	700
59	9.268	9.497		0.16	0.16	1.34	1.08	0.23	77	77	67	1.91	1.4	73	0.012	104	104	115.9	0.08	0.68		119.80	179.44	175.37	59.38	179.18	161	68	68	67		1.001	5.676	681
60	9.428	9.659		0.16	0.16	1.34	1.07	0.23	77	77	67	1.91	1.4	72	0.016	90	90	115.9	-0.07	0.70		119.58	179.23	175.14	59.38	178.96	153	68	68	67		1.001	5.836	699
61	9.589	9.822		0.16	0.16	1.34	1.08	0.23	77	77	67	1.9	1.4	72	0.015	93	94	115.9	0.08	0.70		119.25	178.89	174.77	59.42	178.66	147	68	68	67		1.001	5.838	697
62	9.749	9.984		0.16	0.16	1.34	1.08	0.23	77	77	67	1.9	1.4	72	0.015	93	93	116.0	-0.12	0.64		118.90	178.58	174.49	59.46	178.35	142	68	68	67		1.001	5.357	638
63	9.910	10.148		0.16	0.16	1.34	1.08	0.23	77	77	67	1.91	1.4	72	0.015	93	94	115.9	0.06	0.66		118.49	178.24	174.21	59.53	178.02	139	68	68	67		1.001	5.508	653
64	10.073	10.310		0.16	0.16	1.36	1.07	0.23	78	77	67	1.84	1.4	72	0.013	101	100	116.0	-0.02	0.70		117.98	177.89	173.79	59.61	177.59	137	69	68	67		1.001	5.837	690
65	10.234	10.472		0.16	0.16	1.34	1.07	0.23	78	77	67	1.89	1.4	72	0.013	100	100	116.0	0.00	0.66		117.65	177.51	173.54	59.67	177.32	135	70	68	67		1.001	5.512	649
66	10.395	10.635		0.16	0.16	1.34	1.07	0.23	78	77	67	1.91	1.4	72	0.014	96	97	116.0	-0.02	0.68		117.37	177.29	173.32	59.73	177.09	133	70	68	67		1.001	5.675	667
67	10.556	10.798		0.16	0.16	1.34	1.08	0.23	78	77	67	1.91	1.4	72	0.012	104	105	115.9	0.06	0.55		117.18	177.28	174.20	59.77	176.95	131	70	68	67		1.001	4.547	533
68	10.716	10.960		0.16	0.16	1.34	1.08	0.23	78	77	67	1.9	1.4	72	0.016	90	90	115.9	0.02	0.56		117.12	177.23	174.30	59.81	176.93	129	70	68	67		1.001	4.704	552
69	10.877	11.122		0.16	0.16	1.33	1.08	0.23	78	77	67	1.89	1.4	72	0.015	93	93	115.9	-0.04	0.55		116.95	177.06	174.23	59.90	176.85	128	70	68	67		1.001	4.544	532
70	11.038	11.285		0.16	0.16	1.34	1.08	0.23	78	78	67	1.91	1.4	72	0.013	100	100	116.0	-0.01	0.54		116.64	176.80	173.97	59.98	176.62	126	70	69	67		1.001	4.540	530
71	11.199	11.447		0.16	0.16	1.34	1.08	0.23	78	78	67	1.9	1.4	72	0.013	100	100	116.0	-0.03	0.55		116.22	176.52	173.70	60.06	176.28	125	70	69	67		1.001	4.541	528
72	11.360	11.611		0.16	0.16	1.34	1.07	0.23	78	78	68	1.89	1.4	72	0.013	100	101	115.9	0.10	0.53		115.98	176.30	173.45	60.10	176.08	123	70	69	68		1.001	4.400	511
73	11.521	11.773		0.16	0.16	1.34	1.07	0.23	78	78	68	1.9	1.4	72	0.012	104	104	115.9	0.01	0.55		115.87	176.21	173.29	60.12	175.99	122	70	69	68		1.001	4.546	527
74	11.682	11.935		0.16	0.16	1.34	1.08	0.23	78	78	67	1.91	1.4	72	0.014	96	96	115.9	-0.03	0.56		115.49	175.73	172.82	60.12	175.61	121	70	69	67		1.001	4.702	544
75	11.843	12.098		0.16	0.16	1.34	1.08	0.23	78	78	67	1.89	1.4	72	0.012	104	105	115.9	0.04	0.56		115.32	175.68	172.74	60.12	175.44	120	70	69	67		1.001	4.697	542
76	12.004	12.261		0.16	0.16	1.33	1.08	0.23	78	78	67	1.91	1.4	72	0.011	109	109	115.9	0.00	0.51		115.11	175.38	172.49	60.08	175.19	119	69	69	67		1.001	4.218	486
77	12.165	12.424		0.16	0.16	1.34	1.08	0.23	78	78	68	1.89	1.4	72	0.017	87	88	115.9	-0.06	0.53		114.89	175.18	172.43	60.05	174.94	118	69	69	68		1.001	4.380	504
78	12.326	12.586		0.16	0.16	1.33	1.08	0.23	78	78	68	1.89	1.4	72	0.013	100	100	115.9	0.06	0.56		114.66	174.87	171.99	60.01	174.67	116	69	69	68		1.001	4.704	540
79	12.487	12.748		0.16	0.16	1.33	1.08	0.23	78	78	68	1.91	1.4	72	0.011	109	109	116.0	-0.18	0.54		114.48	174.66	171.76	59.98	174.46	116	69	69	68		1.001	4.540	520
80	12.648	12.911		0.16	0.16	1.34	1.08	0.23	78	78	68	1.91	1.4	72	0.013	100	100	115.9	0.17	0.53		114.28	174.42	171.57	59.95	174.23	114	69	69	68		1.001	4.380	501
81	12.809	13.075		0.16	0.16	1.34	1.07	0.23	78	78	68	1.89	1.4	72	0.013	100	101	116.0	-0.08	0.55		114.09	174.16	171.31	59.91	174.00	113	69	69	68		1.001	4.541	519
82	12.970	13.237		0.16	0.16	1.33	1.07	0.23	79	78	68	1.9	1.4	72	0.014	96	96	115.9	0.03	0.54		113.87	173.89	171.04	59.90	173.77	112	69	69	68		1.001	4.540	518
83	13.131	13.399		0.16	0.16	1.33	1.08	0.23	79	78	68	1.89	1.4	72	0.013	100	100	115.8	0.13	0.56		113.60	173.66	170.86	59.89	173.50	112	69	69	68		1.001	4.703	535
84	13.292	13.562		0.16	0.16	1.34	1.08	0.23	79	78	67	1.89	1.4	73	0.013	100	101	116.0	-0.20	0.55		113.36	173.49	170.64	59.90	173.26	111	69	69	67		1.001	4.548	516
85	13.454	13.725		0.16	0.16	1.33	1.08	0.23	79	78	68	1.91	1.4	72	0.014	97	97	116.0	-0.03	0.53		113.14	173.25	170.42	59.91	173.05	110	69	69	68		1.001	4.398	498
86	13.615	13.888		0.16	0.16	1.34	1.07	0.23	79	78	68	1.91	1.4	72	0.010	114	115	115.9	0.08	0.57		112.88	172.97	170.16	59.93	172.81	109	69	69	68		1.001	4.753	537
87	13.776	14.050		0.16	0.16	1.33	1.07	0.23	79	78	68	1.89	1.4	72	0.014	96	96	115.8	0.10	0.56		112.55	172.72	169.91	59.97	172.52	109	69	69	68		1.001	4.644	523
88	13.937	14.213		0.16	0.16	1.33	1.07	0.23	79	78	68	1.9	1.4	77	0.013	100	101	115.9	-0.07	0.58		112.29	172.55	169.73	60.03	172.32	159	69	69	68		1.001	4.862	547
89	14.098	14.375		0.16	0.16	1.33	1.08	0.23	79	78	68	1.9	1.4	80	0.013	101	101	115.7	0.17	0.53		112.03	172.37	169.57	60.09	172.12	164	70	69	68		1.001	4.381	491
90	14.259	14.538		0.16	0.16	1.33	1.08	0.23	79	78	68	1.91	1.4	74	0.011	109	109	115.8	-0.05	0.56		111.76	172.09	169.32	60.18	171.94	146	69	69	68		1.001	4.699	526
91	14.420	14.701		0.16	0.16	1.33	1.08	0.23	79	78	68	1.9	1.4	73	0.013	100	101	115.7	0.08	0.54		111.52	171.90	169.17	60.24	171.76	135	69	69	68		1.001	4.540	507
92	14.581	14.863		0.16	0.16	1.33	1.08	0.23	79	78	68	1.9	1.4	73	0.013	100	100	115.7	-0.03	0.53		111.18	171.63	168.86	60.28	171.45	129	69	69	68		1.001	4.378	487
93	14.742	15.026		0.16	0.16	1.33	1.08	0.23	79	78	68	1.91	1.4	73	0.013	100	101	115.7	0.03	0.56		110.95	171.53	168.75	60.29	171.25	125	69	69	68		1.001	4.704	523
94	14.903	15.189		0.16	0.16	1.33	1.08	0.23	79	79	68	1.89	1.4	73	0.014	96	97	115.8	-0.05	0.53		110.75	171.16	168.43	60.30	171.05	121	69	69	68		1.001	4.377	485
95	15.064	15.353		0.16	0.16	1.34	1.08	0.23	79	79	68	1.9	1.4	73	0.013	100	101	115.6	0.18	0.54		110.45	170.94	168.23	60.29	170.74	119	69	69	68		1.001	4.539	502
96	15.225	15.515		0.16	0.16	1.33	1.08	0.23	79	79	68	1.9	1.4	73	0.014	96	96	115.7	-0.08	0.51		110.32	170.83	168.08	60.23	170.55	117	69	69	68		1.001	4.217	466
97	15.386	15.677		0.16	0.16	1.34	1.08	0.23	79	79	68	1.89	1.4	73	0.014	96	96	115.8	-0.11	0.53		110.17	170.56	167.81	60.16	170.32	116	69	69	68		1.001	4.383	483
98	15.548	15.840		0.16	0.16	1.33	1.08	0.23	79	79	68	1.91	1.4	72	0.013	100	100	115.7	0.05	0.56		110.02	170.25	167.55	60.08	170.09	115	69	69	68		1.001	4.699	518
99	15.709	16.003		0.16	0.16	1.34	1.08	0.23	79	79	68	1.89	1.4	73	0.015	93	93	115.7	0.03	0.56		109.90	170.06	167.36	60.00	169.89	113	69	69	68		1.001	4.702	517
100	15.870	16.167		0.16	0.16	1.33	1.08	0.23	79	79	68	1.91	1.4	73	0.016	90	91	115.8	-0.09	0.53		109.75	169.89	167.19	59.94	169.69	112	69	69	68		1.001	4.407	484
101	16.031	16.329		0.16	0.16	1.33	1.07	0.23	79	79	68	1.9	1.4	73	0.013	100	100	115.8	0.01	0.55		109.58	169.65	166.94	59.91	169.49	111	69	69	68		1.001	4.590	504
102	16.193	16.491		0.16	0.16	1.33	1.08	0.23	79	79	68	1.9	1.4	73	0.014	97	96	115.7	0.10	0.56		109.26	169.39	166.65	59.89	169.15	110	69	69	68		1.001	4.669	511
103	16.354	16.654		0.16	0.16	1.34	1.08	0.23	79	79	68	1.89	1.4	73	0.013	100	100	115.7	-0.06	0.55		109.03	169.11	166.39	59.89	168.91	109	69	69	68		1.001	4.552	497
104	16.515	16.817		0.16	0.16	1.33	1.07	0.23	79	79	68	1.9	1.4	73	0.013	100	100	115.7	0.00	0.56		108.83	168.91	166.23	59.89	168.73	108	69	69	68		1.001	4.700	512
105	16.676	16.980		0.16	0.16	1.33	1.08	0.23	79	79	68	1.91	1.4	73	0.013	100	100	115.7	0.05	0.53		108.59	168.74	166.06	59.90	168.49	107	69	69	68		1.001	4.378	476
106	16.837	17.142		0.16	0.16	1.33	1.07	0.23	79	79	68	1.9	1.4	73	0.015	93	93	115.6	0.07	0.56		108.30	168.40	165.74	59.93	168.23	107	69	69	68		1.001	4.700	510
107	16.999	17.305		0.16	0.16	1.34	1.07	0.23	79	79	68	1.9	1.4	73	0.013	101	100	115.7	-0.09	0.54		107.97	168.17	165.52	59.99	167.96	105	69	69	68		1.001	4.539	491
108	17.160	17.468		0.16	0.16	1.33	1.08	0.23	79	79	68	1.91	1.4	73	0.013	100	100	115.7	0.01	0.58		107.75	167.93	165.27	60.02	167.78	105	69	69	68		1.001	4.864	525
109	17.321	17.632		0.16	0.16	1.34	1.08	0.23	80	79	68	1.89	1.4	73	0.012	104	105	115.8	-0.09	0.51		107.49	167.72	165.09	60.04	167.53	104	69	69	68		1.001	4.216	454

Elapsed Time	Particulate Sampling Data																	Fuel Weight, lb		Flow, gpm		Temperature Data, oF													
	Gas Meter Cubic Feet (1)	Gas Meter Cubic Feet (2)	Gas Meter Cubic Feet (amb)	Sample Rate, cfm (1)	Sample Rate, cfm (2)	Orifice dH (1)	Orifice dH (2)	Orifice dH (amb)	Meter oF (1)	Meter oF (2)	Meter oF (amb)	Meter Vac. In. Hg. (1)	Meter Vac. In. Hg. (2)	Dilution Tunnel Temp.	Dilution Tunnel dP	Pro. Rate (%) (1)	Pro. Rate (%) (2)	Scale Reading	Weight Change	Load Side Liquid Flow Rate	Boiler Side Liquid Flow Rate (optional)	Thermopile ΔT	Boiler to Heat Exch. Temp.	Heat Exch to Boiler Temp.	Inlet Load Temp.	Outlet Load Temp.	Stack	Filter (1)	Filter (2)	Ambient		Specific Heat of Inlet Water (BTU/lb-°F)	Mass Flow Rate of Inlet Water (lb/min)	Heat Output, Btu
110	17.482	17.794		0.16	0.16	1.34	1.08	0.23	80	79	68	1.91	1.4	75	0.012	104	104	115.6	0.17	0.53		107.27	167.53	164.85	60.04	167.32	103	69	69	68		1.001	4.379	470
111	17.643	17.956		0.16	0.16	1.34	1.08	0.23	80	79	68	1.91	1.4	73	0.015	93	93	115.7	-0.10	0.55		106.99	167.21	164.57	60.04	167.03	102	69	69	68		1.001	4.543	487
112	17.805	18.119		0.16	0.16	1.34	1.08	0.23	80	79	68	1.9	1.4	73	0.013	100	100	115.8	-0.08	0.55		106.84	166.99	164.32	59.93	166.78	102	69	69	68		1.001	4.543	486
113	17.966	18.282		0.16	0.16	1.34	1.08	0.23	80	79	68	1.89	1.4	72	0.012	104	104	115.7	0.12	0.56		106.89	166.75	164.11	59.67	166.56	101	69	69	68		1.001	4.703	503
114	18.127	18.446		0.16	0.16	1.34	1.07	0.23	80	79	68	1.9	1.4	72	0.011	108	110	115.8	-0.13	0.53		106.89	166.49	163.84	59.43	166.32	100	69	69	68		1.001	4.381	469
115	18.289	18.608		0.16	0.16	1.34	1.07	0.23	80	79	68	1.91	1.4	71	0.012	104	104	115.7	0.09	0.66		106.86	166.31	162.86	59.22	166.08	100	69	69	68		1.001	5.515	590
116	18.450	18.771		0.16	0.16	1.34	1.08	0.23	80	79	68	1.91	1.4	71	0.014	96	96	115.7	0.00	0.66		106.75	165.77	162.29	58.98	165.72	100	69	69	68		1.001	5.503	588
117	18.611	18.933		0.16	0.16	1.34	1.08	0.23	80	79	68	1.89	1.4	71	0.011	108	108	115.7	0.01	0.69		106.50	165.45	161.90	58.76	165.26	99	69	69	68		1.001	5.723	610
118	18.773	19.096		0.16	0.16	1.34	1.08	0.23	80	79	68	1.91	1.4	71	0.014	97	96	115.7	0.00	0.66		106.33	165.03	161.49	58.58	164.91	98	69	69	68		1.001	5.518	587
119	18.934	19.260		0.16	0.16	1.34	1.08	0.23	80	79	68	1.91	1.4	71	0.014	96	97	115.5	0.15	0.68		106.16	164.75	161.21	58.39	164.55	128	69	69	68		1.001	5.639	599
120	19.095	19.422		0.16	0.16	1.34	1.07	0.23	80	79	68	1.9	1.4	75	0.013	100	100	115.6	-0.04	0.70		106.07	164.51	160.96	58.23	164.30	149	69	69	68		1.001	5.841	620
121	19.256	19.584		0.16	0.16	1.34	1.08	0.23	80	79	68	1.91	1.4	73	0.014	96	96	115.5	0.08	0.70		105.81	164.06	160.50	58.07	163.88	137	69	69	68		1.001	5.842	619
122	19.418	19.747		0.16	0.16	1.34	1.08	0.23	80	79	68	1.89	1.4	71	0.014	97	96	115.5	0.02	0.66		105.73	163.87	160.32	57.93	163.65	125	69	69	68		1.001	5.515	584
123	19.579	19.910		0.16	0.16	1.34	1.07	0.23	80	79	67	1.9	1.4	70	0.015	93	93	115.5	-0.02	0.62		105.65	163.56	160.04	57.78	163.43	118	69	69	67		1.001	5.190	549
124	19.740	20.074		0.16	0.16	1.34	1.08	0.23	80	79	67	1.91	1.4	70	0.012	104	105	115.4	0.15	0.62		105.42	163.33	159.82	57.66	163.08	113	69	69	67		1.001	5.193	548
125	19.902	20.236		0.16	0.16	1.34	1.08	0.23	80	79	67	1.91	1.4	70	0.014	96	96	115.5	-0.16	0.68		105.34	163.04	159.54	57.55	162.88	110	68	69	67		1.001	5.678	599
126	20.063	20.399		0.16	0.16	1.34	1.08	0.23	80	79	67	1.91	1.4	70	0.015	93	93	115.4	0.09	0.64		105.10	162.72	159.23	57.46	162.56	108	68	69	67		1.001	5.355	564
127	20.225	20.562		0.16	0.16	1.34	1.08	0.23	80	79	67	1.91	1.4	70	0.014	96	96	115.5	-0.11	0.64		104.80	162.37	158.90	57.42	162.22	106	68	69	67		1.001	5.357	562
128	20.386	20.725		0.16	0.16	1.34	1.08	0.23	80	79	67	1.9	1.4	69	0.013	99	100	115.4	0.17	0.58		104.59	162.18	159.11	57.37	161.97	105	68	68	67		1.001	4.864	509
129	20.548	20.889		0.16	0.16	1.34	1.08	0.23	80	79	67	1.89	1.4	69	0.013	100	101	115.3	0.02	0.68		104.35	161.94	158.49	57.41	161.77	104	68	68	67		1.001	5.682	594
130	20.709	21.051		0.16	0.16	1.34	1.07	0.23	80	79	66	1.91	1.4	73	0.011	108	108	115.2	0.11	0.68		103.95	161.56	158.14	57.44	161.39	148	68	69	66		1.001	5.677	591
131	20.870	21.214		0.16	0.16	1.34	1.07	0.23	80	79	66	1.92	1.4	77	0.015	93	94	114.7	0.53	0.66		103.59	161.27	157.76	57.49	161.08	188	68	69	66		1.001	5.516	572
132	21.031	21.376		0.16	0.16	1.34	1.08	0.23	80	79	66	1.9	1.4	81	0.013	101	100	114.3	0.37	0.66		103.37	161.08	157.57	57.51	160.88	226	69	69	66		1.001	5.520	571
133	21.193	21.540		0.16	0.16	1.35	1.08	0.23	80	79	66	1.91	1.4	85	0.012	106	106	113.8	0.53	0.66		103.60	161.48	157.94	57.54	161.14	256	69	69	66		1.001	5.522	573
134	21.354	21.702		0.16	0.16	1.35	1.07	0.23	80	79	66	1.91	1.4	88	0.013	101	101	113.3	0.50	0.66		104.40	162.48	158.86	57.55	161.95	282	69	70	66		1.001	5.518	577
135	21.515	21.864		0.16	0.16	1.34	1.07	0.23	80	79	66	1.92	1.4	93	0.017	89	89	112.9	0.45	0.68		105.11	163.14	159.50	57.54	162.65	303	70	70	66		1.001	5.680	598
136	21.676	22.026		0.16	0.16	1.34	1.08	0.23	80	79	66	1.93	1.4	95	0.012	106	106	112.3	0.56	0.68		105.85	163.81	160.19	57.56	163.41	316	70	70	66		1.001	5.679	602
137	21.837	22.189		0.16	0.16	1.35	1.08	0.23	80	79	66	1.93	1.4	97	0.012	106	107	111.7	0.62	0.66		106.60	164.71	161.07	57.65	164.24	326	70	71	66		1.001	5.518	589
138	21.998	22.351		0.16	0.16	1.34	1.07	0.23	80	79	66	1.93	1.4	98	0.012	106	106	111.1	0.52	0.68		107.34	165.58	161.85	57.74	165.08	335	71	71	66		1.001	5.680	610
139	22.159	22.512		0.16	0.16	1.34	1.07	0.23	80	79	66	1.92	1.4	100	0.013	102	102	110.6	0.58	0.66		107.97	166.23	162.48	57.80	165.77	342	71	72	66		1.001	5.515	596
140	22.320	22.674		0.16	0.16	1.34	1.07	0.23	80	79	66	1.93	1.4	101	0.013	102	102	110.1	0.41	0.62		108.72	167.20	163.44	57.85	166.58	347	72	72	66		1.001	5.198	566
141	22.481	22.836		0.16	0.16	1.34	1.08	0.23	80	79	66	1.94	1.4	102	0.013	102	102	109.5	0.61	0.64		109.53	168.03	164.31	57.99	167.41	350	72	72	66		1.001	5.350	587
142	22.641	22.999		0.16	0.16	1.34	1.07	0.23	80	79	66	1.94	1.4	104	0.014	98	99	109.0	0.52	0.66		110.22	168.76	165.03	57.94	168.16	354	72	73	66		1.001	5.517	609
143	22.802	23.160		0.16	0.16	1.34	1.07	0.23	80	79	66	1.93	1.4	105	0.012	107	106	108.6	0.39	0.66		110.90	169.48	165.74	57.98	168.88	356	73	73	66		1.001	5.516	612
144	22.963	23.322		0.16	0.16	1.34	1.07	0.23	80	79	66	1.93	1.4	106	0.013	103	103	108.0	0.59	0.66		111.86	170.41	166.66	58.04	169.90	358	73	73	66		1.001	5.507	617
145	23.123	23.484		0.16	0.16	1.33	1.07	0.23	80	79	67	1.94	1.4	107	0.012	106	107	107.6	0.49	0.66		112.41	171.18	167.23	58.11	170.51	359	73	74	67		1.001	5.515	621
146	23.284	23.645		0.16	0.16	1.33	1.07	0.23	80	79	67	1.94	1.4	108	0.012	107	106	106.9	0.63	0.68		113.53	172.31	168.47	58.21	171.74	360	74	74	67		1.001	5.672	645
147	23.444	23.806		0.16	0.16	1.33	1.07	0.23	80	79	67	1.93	1.4	108	0.012	107	106	106.5	0.42	0.69		114.24	173.34	169.35	58.32	172.56	360	74	74	67		1.001	5.734	656
148	23.605	23.968		0.16	0.16	1.33	1.07	0.23	80	79	67	1.95	1.4	108	0.014	99	99	106.1	0.42	0.64		115.19	174.35	170.42	58.45	173.64	360	74	75	67		1.001	5.366	619
149	23.765	24.130		0.16	0.16	1.33	1.06	0.23	80	79	67	1.93	1.4	109	0.013	102	103	105.6	0.51	0.62		116.21	175.46	171.47	58.56	174.77	361	75	75	67		1.001	5.187	603
150	23.926	24.290		0.16	0.16	1.33	1.06	0.23	80	79	67	1.95	1.4	110	0.013	103	102	105.0	0.56	0.62		117.05	176.33	172.38	58.68	175.73	360	75	75	67		1.001	5.185	608
151	24.086	24.451		0.16	0.16	1.33	1.06	0.23	80	79	67	1.93	1.4	110	0.012	107	107	104.6	0.41	0.62		117.91	177.40	173.36	58.78	176.69	359	75	75	67		1.001	5.186	612
152	24.246	24.612		0.16	0.16	1.33	1.06	0.23	80	79	67	1.94	1.5	110	0.013	103	102	104.2	0.37	0.66		119.09	178.59	174.60	58.84	177.93	358	75	76	67		1.001	5.516	658
153	24.407	24.773		0.16	0.16	1.33	1.06	0.23	80	79	67	1.95	1.5	110	0.015	96	95	103.6	0.63	0.66		119.85	179.38	175.36	58.89	178.74	360	75	76	67		1.001	5.513	662
154	24.567	24.934		0.16	0.16	1.33	1.06	0.23	80	79	67	1.94	1.5	110	0.012	107	107	103.2	0.39	0.66		120.63	180.14	176.12	58.93	179.56	362	76	76	67		1.001	5.512	666
155	24.728	25.095		0.16	0.16	1.34	1.06	0.23	80	79	67	1.93	1.5	111	0.014	100	99	102.7	0.47	0.68		121.64	181.37	177.37	58.93	180.57	361	76	76	67		1.001	5.676	691
156	24.888	25.256		0.16	0.16	1.33	1.05	0.23	80	79	67	1.94	1.5	111	0.012	107	107	102.2	0.58	0.64		122.83	182.41	178.25	58.92	181.75	361	76	76	67		1.001	5.353	658
157	25.048	25.416		0.16	0.16	1.33	1.05	0.23	80	79	68	1.93	1.5	101	0.012	106	105	101.9	0.27	0.68		123.59	183.00	178.83	58.92	182.51	335	75	76	68		1.001	5.671	702
158	25.209	25.577		0.16	0.16	1.33	1.06	0.23	80	79	67	1.93	1.4	88	0.013	101	100	101.6	0.24	0.66		124.36	183.88	179.64	58.88	183.25	308	74	75	67		1.001	5.515	687
159	25.370	25.738		0.16	0.16	1.34	1.05	0.23	80	79	68	1.93	1.4	84	0.012	105	104	101.5	0.17	0.68		124.93	184.23	180.10	58.85	183.78	292	73	74	68		1.001	5.673	710
160	25.531	25.899		0.16	0.16	1.34	1.05	0.23	80	79	67	1.93	1.4	81	0.011	109	109	101.4	0.06	0.66		124.92	184.18	180.01	58.82	183.74	279	73	73	67		1.001	5.492	687
161	25.692	26.060		0.16	0.16	1.34	1.05	0.23	80	79	67	1.93	1.4	80	0.012	105	104	101.3	0.09	0.67		125.14	184.34	180.18	58.82	183.95	269	72	73	67		1.001	5.552	696
162	25.853	26.222		0.16	0.16	1.33	1.06	0.23	80	79	67	1.91	1.4	79	0.013	100	100	101.4	-0.05	0.58		125.14	184.33	180.59	58.79	183.93	259	72	72	67		1.001	4.866	610
163	26.014	26.384		0.16	0.16	1.33	1.05	0.23	80	79	67	1.91	1.4	78	0.013	100	100	101.3	0.08	0.56		125.33	184.52	181.09	58.79	184.12	251	71	72	67		1.001	4.697	589
164	26.175	26.545		0.16	0.16	1.33	1.06	0.23	80	79	67	1.92	1.4	78	0.011	109	108	101.2	0.04	0.56		125.32	184.46	181.09	58.86	184.18	244	71	72	67		1.001	4.702	590
165	26.336	26.706		0.16	0.16	1.33	1.06	0.23	80	79	67	1.93	1.4	77	0.012	104	104	101.4	-0.12	0.56		125.28	184.57	181.21	58.95	184.24	236	71	72	67		1.001	4.702	590
166	26.497	26.868		0.16	0.16	1.33	1.06	0.23	80	79	67	1.93	1.4	77	0.015	93	93	101.1	0.21	0.58		125.21	184.56	181.20	59.06	184.26	232	71	72	67		1.001	4.859	609
167	26.658	27.031		0.16	0.16	1.33	1.07	0.23	80	79	67	1.91	1.4	77	0.012	104	105	101.2	-0.02	0.58		125.01	184.48	181.18	59.17	184.18	227	71	72	67		1.001	4.863	609
168	26.819	27.193		0.16	0.16	1.33	1.06	0.23	80	79	67	1.92	1.4	76	0.013	100	100	101.1	0.10	0.56		124.91	184.49	181.15	59.27	184.18	222	71	72	67		1.001	4.698	588
169	26.980	27.355		0.16	0.16	1.33	1.07	0.23	80	79	68	1.91	1.4	76	0.012	104	104	101.1	-0.01	0.56		124.73	184.46	181.12	59.37	184.10	219	71	72	68		1.001	4.699	587
170	27.141	27.518		0.16	0.16	1.33	1.07	0.23	80	79	67	1.91	1.4	74	0.014	96	97	101.1	-0.07	0.55		124.64	184.39	181.09	59.48	184.12	216	71	72	67		1.001	4.546	567

Elapsed Time	Particulate Sampling Data																	Fuel Weight, lb		Flow, gpm		Temperature Data, oF												
	Gas Meter Cubic Feet (1)	Gas Meter Cubic Feet (2)	Gas Meter Cubic Feet (amb)	Sample Rate, cfm (1)	Sample Rate, cfm (2)	Orifice dH (1)	Orifice dH (2)	Orifice dH (amb)	Meter oF (1)	Meter oF (2)	Meter oF (amb)	Meter Vac. In. Hg. (1)	Meter Vac. In. Hg. (2)	Dilution Tunnel Temp.	Dilution Tunnel dP	Pro. Rate (%) (1)	Pro. Rate (%) (2)	Scale Reading	Weight Change	Load Side Liquid Flow Rate	Boiler Side Liquid Flow Rate (optional)	Thermopile ΔT	Boiler to Heat Exch. Temp.	Heat Exch to Boiler Temp.	Inlet Load Temp.	Outlet Load Temp.	Stack	Filter (1)	Filter (2)	Ambient		Specific Heat of Inlet Water (BTU/lb-°F)	Mass Flow Rate of Inlet Water (lb/min)	Heat Output, Btu
171	27.302	27.680		0.16	0.16	1.33	1.08	0.23	80	79	68	1.92	1.4	74	0.012	104	104	101.3	-0.12	0.54		124.43	184.24	180.93	59.55	183.98	213	71	71	68		1.001	4.537	565
172	27.463	27.843		0.16	0.16	1.33	1.07	0.23	80	79	67	1.92	1.4	74	0.013	100	100	101.1	0.16	0.56		124.19	184.03	180.75	59.62	183.82	208	71	71	67		1.001	4.701	585
173	27.624	28.005		0.16	0.16	1.33	1.07	0.23	80	79	68	1.9	1.4	74	0.013	100	100	101.1	0.03	0.58		123.92	183.79	180.55	59.71	183.63	204	71	71	68		1.001	4.868	604
174	27.786	28.168		0.16	0.16	1.33	1.07	0.23	80	79	68	1.92	1.4	74	0.014	97	97	101.2	-0.18	0.54		123.60	183.66	180.36	59.79	183.39	201	71	71	68		1.001	4.538	562
175	27.947	28.330		0.16	0.16	1.33	1.07	0.23	80	79	68	1.92	1.4	74	0.013	100	100	101.1	0.19	0.55		123.46	183.51	180.24	59.84	183.29	197	71	71	68		1.001	4.613	570
176	28.108	28.494		0.16	0.16	1.33	1.07	0.23	80	79	68	1.92	1.4	74	0.013	100	101	101.2	-0.19	0.58		123.30	183.48	180.19	59.87	183.17	193	70	71	68		1.001	4.834	597
177	28.269	28.656		0.16	0.16	1.33	1.07	0.23	80	79	68	1.91	1.4	73	0.012	104	104	101.1	0.15	0.56		123.18	183.37	180.05	59.90	183.08	189	70	71	68		1.001	4.699	579
178	28.430	28.818		0.16	0.16	1.33	1.07	0.23	80	79	68	1.91	1.4	74	0.013	100	100	101.1	0.01	0.56		122.99	183.14	179.90	59.92	182.90	186	70	71	68		1.001	4.700	579
179	28.592	28.981		0.16	0.16	1.33	1.07	0.23	80	79	68	1.91	1.4	74	0.014	97	97	101.0	0.07	0.58		122.90	183.06	179.83	59.92	182.82	183	70	71	68		1.001	4.861	598
180	28.753	29.143		0.16	0.16	1.33	1.07	0.23	80	79	68	1.9	1.4	73	0.013	100	100	101.1	-0.07	0.56		122.69	182.88	179.63	59.93	182.63	179	70	71	68		1.001	4.704	578
181	28.914	29.306		0.16	0.16	1.32	1.08	0.23	80	79	68	1.91	1.4	73	0.013	100	100	101.2	-0.15	0.56		122.49	182.74	179.44	59.95	182.44	176	70	71	68		1.001	4.698	576
182	29.075	29.468		0.16	0.16	1.33	1.07	0.23	80	79	68	1.91	1.4	73	0.013	100	100	101.0	0.18	0.58		122.33	182.45	179.27	59.95	182.28	173	70	71	68		1.001	4.863	596
183	29.236	29.631		0.16	0.16	1.34	1.07	0.23	80	79	68	1.92	1.4	73	0.012	104	104	101.0	0.03	0.55		122.19	182.38	179.11	59.93	182.12	170	70	70	68		1.001	4.541	556
184	29.397	29.793		0.16	0.16	1.33	1.07	0.23	80	79	68	1.9	1.4	74	0.013	100	100	101.1	-0.08	0.58		122.03	182.12	178.92	59.91	181.94	168	70	70	68		1.001	4.857	593
185	29.558	29.957		0.16	0.16	1.33	1.07	0.23	80	79	68	1.92	1.4	73	0.012	104	105	101.1	-0.01	0.56		121.82	181.89	178.67	59.87	181.69	165	70	70	68		1.001	4.707	574
186	29.720	30.119		0.16	0.16	1.33	1.07	0.23	80	79	68	1.92	1.4	73	0.013	100	100	101.0	0.08	0.53		121.64	181.70	178.50	59.84	181.48	162	70	70	68		1.001	4.375	533
187	29.881	30.281		0.16	0.16	1.33	1.07	0.23	80	79	68	1.92	1.4	73	0.014	96	96	101.0	0.00	0.53		121.51	181.61	178.51	59.81	181.32	160	70	70	68		1.001	4.378	533
188	30.042	30.444		0.16	0.16	1.33	1.08	0.23	80	79	68	1.91	1.4	73	0.014	96	97	101.1	-0.04	0.57		121.47	181.47	178.24	59.79	181.26	158	70	70	68		1.001	4.708	573
189	30.203	30.606		0.16	0.16	1.33	1.08	0.23	80	79	68	1.91	1.4	73	0.013	100	100	101.1	-0.03	0.56		121.28	181.23	178.01	59.76	181.04	156	70	70	68		1.001	4.704	571
190	30.364	30.769		0.16	0.16	1.33	1.08	0.23	80	79	68	1.93	1.4	73	0.016	90	90	101.1	-0.01	0.54		120.99	180.95	177.74	59.73	180.72	153	70	70	68		1.001	4.537	550
191	30.526	30.931		0.16	0.16	1.33	1.07	0.23	80	79	68	1.91	1.4	73	0.013	100	100	101.2	-0.10	0.60		120.76	180.67	177.48	59.73	180.49	151	70	70	68		1.001	4.979	602
192	30.687	31.094		0.16	0.16	1.33	1.07	0.23	80	79	68	1.91	1.4	73	0.011	108	109	101.1	0.07	0.56		120.47	180.50	177.30	59.75	180.22	149	70	70	68		1.001	4.692	566
193	30.848	31.256		0.16	0.16	1.33	1.07	0.23	80	79	68	1.91	1.4	73	0.012	104	104	101.1	0.07	0.56		120.38	180.40	177.21	59.76	180.14	147	70	70	68		1.001	4.697	566
194	31.009	31.420		0.16	0.16	1.33	1.07	0.23	80	79	69	1.9	1.4	75	0.014	96	97	101.2	-0.14	0.56		120.19	180.21	177.03	59.79	179.98	145	70	70	69		1.001	4.701	566
195	31.170	31.582		0.16	0.16	1.33	1.07	0.23	80	79	68	1.92	1.4	74	0.014	96	96	101.1	0.15	0.58		119.97	180.03	176.86	59.79	179.77	143	70	70	68		1.001	4.861	584
196	31.332	31.745		0.16	0.16	1.34	1.07	0.23	80	79	68	1.92	1.4	73	0.012	104	104	101.1	0.00	0.58		119.82	179.70	176.54	59.69	179.52	141	70	70	68		1.001	4.862	583
197	31.493	31.907		0.16	0.16	1.34	1.07	0.23	80	79	68	1.91	1.4	73	0.015	93	93	101.2	-0.11	0.56		119.89	179.51	176.40	59.47	179.36	140	70	70	68		1.001	4.706	565
198	31.654	32.070		0.16	0.16	1.33	1.07	0.23	80	80	68	1.91	1.4	72	0.015	93	93	101.2	0.01	0.56		119.66	179.13	175.96	59.28	178.94	138	70	70	68		1.001	4.706	564
199	31.815	32.233		0.16	0.16	1.34	1.07	0.23	80	80	68	1.92	1.4	73	0.016	90	90	101.1	0.04	0.58		119.60	178.94	175.75	59.11	178.71	162	70	70	68		1.001	4.872	583
200	31.976	32.394		0.16	0.16	1.33	1.06	0.23	80	80	68	1.93	1.4	82	0.013	101	100	100.8	0.29	0.58		119.51	178.63	175.45	58.95	178.46	188	70	71	68		1.001	4.865	582
201	32.137	32.557		0.16	0.16	1.34	1.07	0.23	80	80	68	1.9	1.4	76	0.012	104	105	100.7	0.11	0.56		119.45	178.47	175.31	58.81	178.26	171	70	70	68		1.001	4.707	563
202	32.299	32.719		0.16	0.16	1.34	1.08	0.23	80	80	68	1.91	1.4	73	0.014	97	96	100.7	0.02	0.60		119.32	178.27	175.14	58.69	178.02	160	70	70	68		1.001	5.028	601
203	32.460	32.883		0.16	0.16	1.34	1.07	0.23	80	80	68	1.92	1.4	72	0.015	93	94	100.7	-0.01	0.56		119.32	178.07	174.92	58.55	177.87	152	69	70	68		1.001	4.696	561
204	32.621	33.045		0.16	0.16	1.34	1.07	0.23	80	80	68	1.92	1.4	71	0.013	100	99	100.6	0.13	0.58		119.13	177.78	174.58	58.42	177.55	147	69	70	68		1.001	4.830	576
205	32.783	33.207		0.16	0.16	1.34	1.07	0.23	80	80	68	1.91	1.4	71	0.015	93	92	100.8	-0.16	0.59		119.13	177.65	174.48	58.27	177.40	143	69	70	68		1.001	4.950	590
206	32.944	33.370		0.16	0.16	1.34	1.08	0.23	80	80	67	1.92	1.4	71	0.012	104	104	100.5	0.23	0.57		119.03	177.32	174.19	58.12	177.15	140	69	69	67		1.001	4.713	562
207	33.105	33.533		0.16	0.16	1.34	1.08	0.23	80	80	67	1.9	1.4	71	0.012	104	104	100.7	-0.13	0.58		118.98	177.19	174.06	57.99	176.97	138	69	69	67		1.001	4.874	581
208	33.267	33.696		0.16	0.16	1.34	1.07	0.23	80	80	67	1.91	1.4	71	0.014	97	96	100.6	0.10	0.55		118.96	176.98	173.81	57.85	176.80	136	69	69	67		1.001	4.547	542
209	33.428	33.859		0.16	0.16	1.34	1.07	0.23	80	80	67	1.9	1.4	70	0.012	104	104	100.6	-0.09	0.55		118.79	176.71	173.59	57.74	176.53	134	69	69	67		1.001	4.545	541
210	33.589	34.021		0.16	0.16	1.34	1.08	0.23	80	80	67	1.91	1.4	70	0.011	108	108	100.6	0.07	0.58		118.59	176.45	173.30	57.66	176.25	132	69	69	67		1.001	4.867	578
211	33.751	34.184		0.16	0.16	1.34	1.08	0.23	80	80	67	1.92	1.4	70	0.012	104	104	100.6	-0.04	0.58		118.43	176.21	173.09	57.59	176.02	131	69	69	67		1.001	4.866	577
212	33.912	34.347		0.16	0.16	1.34	1.08	0.23	80	80	67	1.91	1.4	70	0.012	104	104	100.6	0.03	0.60		118.15	175.88	172.75	57.55	175.70	129	68	69	67		1.001	5.032	595
213	34.074	34.510		0.16	0.16	1.34	1.08	0.23	80	80	67	1.9	1.4	70	0.012	104	104	100.6	-0.05	0.56		117.99	175.73	172.62	57.52	175.50	128	68	69	67		1.001	4.708	556
214	34.235	34.673		0.16	0.16	1.34	1.08	0.23	80	80	67	1.91	1.4	70	0.014	96	96	100.8	-0.15	0.58		117.82	175.53	172.41	57.49	175.32	126	68	69	67		1.001	4.871	575
215	34.396	34.836		0.16	0.16	1.34	1.08	0.23	80	79	66	1.9	1.4	70	0.013	99	100	100.7	0.05	0.60		117.69	175.40	172.31	57.48	175.17	125	68	68	66		1.001	5.026	592
216	34.558	34.999		0.16	0.16	1.34	1.08	0.23	80	79	66	1.92	1.4	70	0.014	96	96	100.6	0.12	0.57		117.40	175.08	172.00	57.45	174.86	124	68	68	66		1.001	4.709	554
217	34.719	35.162		0.16	0.16	1.34	1.08	0.23	80	79	66	1.92	1.4	69	0.011	108	109	100.7	-0.05	0.55		117.14	174.78	171.67	57.41	174.55	123	68	68	66		1.001	4.544	533
218	34.880	35.325		0.16	0.16	1.34	1.08	0.23	80	79	66	1.9	1.4	69	0.013	99	100	100.7	0.00	0.57		116.91	174.49	171.37	57.38	174.28	121	68	68	66		1.001	4.714	552
219	35.042	35.488		0.16	0.16	1.34	1.07	0.23	80	79	66	1.91	1.4	69	0.012	104	104	100.7	0.00	0.60		116.83	174.35	171.26	57.31	174.14	120	68	68	66		1.001	5.035	589
220	35.203	35.651		0.16	0.16	1.34	1.08	0.23	80	79	66	1.92	1.4	70	0.013	99	100	100.5	0.17	0.57		116.47	173.95	170.87	57.28	173.75	119	68	68	66		1.001	4.710	549
221	35.365	35.814		0.16	0.16	1.34	1.08	0.23	80	79	66	1.9	1.4	70	0.012	104	104	100.6	-0.08	0.59		116.31	173.84	170.75	57.25	173.56	118	68	68	66		1.001	4.922	573
222	35.526	35.977		0.16	0.16	1.34	1.08	0.23	80	79	66	1.91	1.4	70	0.014	96	96	100.6	-0.02	0.57		115.97	173.47	170.43	57.32	173.29	117	67	68	66		1.001	4.710	547
223	35.687	36.140		0.16	0.16	1.34	1.08	0.23	80	79	66	1.91	1.4	70	0.012	104	104	100.6	-0.05	0.59		115.63	173.31	170.22	57.44	173.06	116	67	68	66		1.001	4.877	565
224	35.849	36.302		0.16	0.16	1.34	1.07	0.23	80	79	66	1.91	1.4	69	0.012	104	103	100.7	-0.04	0.55		115.21	172.95	169.93	57.60	172.81	115	67	68	66		1.001	4.554	525
225	36.010	36.465		0.16	0.16	1.34	1.08	0.23	80	79	66	1.92	1.4	69	0.012	103	104	100.7	0.04	0.58		114.80	172.72	169.70	57.71	172.51	114	67	68	66		1.001	4.868	560
226	36.171	36.628		0.16	0.16	1.34	1.08	0.23	80	79	66	1.91	1.4	69	0.013	99	100	100.8	-0.15	0.60		114.48	172.55	169.50	57.84	172.32	114	67	68	66		1.001	5.034	577
227	36.333	36.792		0.16	0.16	1.34	1.08	0.23	80	79	66	1.91	1.4	70	0.014	96	97	100.6	0.18	0.55		114.13	172.32	169.30	57.98	172.11	113	67	68	66		1.001	4.543	519
228	36.495	36.955		0.16	0.16	1.35	1.08	0.23	80	79	66	1.91	1.4	70	0.013	100	100	100.6	-0.01	0.56		113.69	172.07	169.05	58.15	171.84	112	67	68	66		1.001	4.702	535
229	36.656	37.117		0.16	0.16	1.34	1.08	0.23	80	79	66	1.9	1.4	70	0.011	108	108	100.7	-0.11	0.57		113.26	171.81	168.78	58.33	171.59	111	67	68	66		1.001	4.709	534
230	36.817	37.280		0.16	0.16	1.34	1.08	0.23	80	79	67	1.91	1.4	70	0.015	93	93	100.8	-0.07	0.58		112.93	171.58	168.65	58.50	171.43	110	67	68	67		1.001	4.874	551
231	36.979	37.443		0.16	0.16	1.34	1.07	0.23	80	79	67	1.93	1.4	75	0.013	101	101	100.5	0.27	0.57		112.41	171.28	168.34	58.68	171.08	143	68	68	67		1.001	4.709	530

Elapsed Time	Particulate Sampling Data																	Fuel Weight, lb		Flow, gpm		Temperature Data, oF												
	Gas Meter Cubic Feet (1)	Gas Meter Cubic Feet (2)	Gas Meter Cubic Feet (amb)	Sample Rate, cfm (1)	Sample Rate, cfm (2)	Orifice dH (1)	Orifice dH (2)	Orifice dH (amb)	Meter oF (1)	Meter oF (2)	Meter oF (amb)	Meter Vac. In. Hg. (1)	Meter Vac. In. Hg. (2)	Dilution Tunnel Temp.	Dilution Tunnel dP	Pro. Rate (%) (1)	Pro. Rate (%) (2)	Scale Reading	Weight Change	Load Side Liquid Flow Rate	Boiler Side Liquid Flow Rate (optional)	Thermopile ΔT	Boiler to Heat Exch. Temp.	Heat Exch to Boiler Temp.	Inlet Load Temp.	Outlet Load Temp.	Stack	Filter (1)	Filter (2)	Ambient		Specific Heat of Inlet Water (BTU/lb-°F)	Mass Flow Rate of Inlet Water (lb/min)	Heat Output, Btu
232	37.140	37.606		0.16	0.16	1.34	1.07	0.23	80	79	67	1.91	1.4	76	0.015	93	94	100.5	0.03	0.58		111.95	170.95	168.00	58.85	170.80	148	68	68	67		1.001	4.869	546
233	37.301	37.769		0.16	0.16	1.34	1.07	0.23	80	79	66	1.92	1.4	72	0.011	108	109	100.5	0.05	0.60		111.47	170.62	167.68	59.03	170.50	136	68	68	66		1.001	5.025	561
234	37.463	37.931		0.16	0.16	1.34	1.08	0.23	80	79	67	1.91	1.4	71	0.013	100	100	100.5	-0.03	0.55		111.01	170.39	167.42	59.18	170.19	128	68	68	67		1.001	4.566	507
235	37.624	38.094		0.16	0.16	1.34	1.08	0.23	80	79	67	1.91	1.4	71	0.012	104	104	100.5	-0.04	0.57		110.71	170.22	167.28	59.33	170.04	123	68	68	67		1.001	4.709	522
236	37.785	38.257		0.16	0.16	1.34	1.08	0.23	80	79	67	1.9	1.4	71	0.013	100	100	100.4	0.16	0.61		110.32	169.99	167.08	59.47	169.79	119	68	68	67		1.001	5.096	563
237	37.947	38.420		0.16	0.16	1.34	1.07	0.23	80	79	67	1.9	1.4	71	0.012	104	104	100.6	-0.23	0.57		110.00	169.80	166.88	59.57	169.57	116	68	68	67		1.001	4.714	519
238	38.108	38.583		0.16	0.16	1.34	1.07	0.23	80	79	67	1.9	1.4	71	0.014	96	96	100.6	-0.01	0.58		109.70	169.60	166.66	59.67	169.37	115	68	68	67		1.001	4.868	535
239	38.270	38.745		0.16	0.16	1.34	1.08	0.23	80	79	67	1.91	1.4	71	0.013	100	100	100.5	0.14	0.55		109.43	169.33	166.46	59.72	169.15	113	68	68	67		1.001	4.543	498
240	38.431	38.908		0.16	0.16	1.33	1.08	0.23	80	79	67	1.9	1.4	71	0.014	96	96	100.4	0.04	0.56		109.15	169.09	166.17	59.74	168.89	112	68	68	67		1.001	4.707	514
241	38.592	39.071		0.16	0.16	1.33	1.08	0.23	79	79	67	1.9	1.4	71	0.012	104	104	100.5	-0.04	0.55		108.82	168.74	165.85	59.73	168.55	112	68	68	67		1.001	4.545	495
242	38.754	39.234		0.16	0.16	1.33	1.08	0.23	79	79	67	1.91	1.4	71	0.013	100	100	100.3	0.14	0.51		108.65	168.53	165.66	59.72	168.36	110	68	68	67		1.001	4.220	459
243	38.915	39.396		0.16	0.16	1.34	1.07	0.23	79	79	67	1.9	1.4	71	0.012	104	104	100.3	-0.01	0.58		108.36	168.29	165.41	59.70	168.06	109	68	68	67		1.001	4.866	528
244	39.077	39.559		0.16	0.16	1.34	1.08	0.23	80	79	67	1.92	1.4	71	0.014	97	96	100.4	-0.11	0.51		108.18	167.99	165.15	59.67	167.85	109	68	68	67		1.001	4.219	457
245	39.238	39.722		0.16	0.16	1.34	1.07	0.23	80	79	67	1.91	1.4	71	0.012	104	104	100.4	0.01	0.58		107.99	167.82	164.92	59.64	167.63	107	68	68	67		1.001	4.865	526
246	39.399	39.885		0.16	0.16	1.34	1.07	0.23	80	79	67	1.9	1.4	72	0.013	100	100	100.4	0.07	0.55		107.72	167.56	164.65	59.61	167.33	107	68	68	67		1.001	4.542	490
247	39.561	40.048		0.16	0.16	1.33	1.07	0.23	80	79	67	1.91	1.4	72	0.014	97	97	100.5	-0.09	0.55		107.55	167.28	164.42	59.57	167.12	106	68	68	67		1.001	4.542	489
248	39.722	40.210		0.16	0.16	1.34	1.08	0.23	80	79	67	1.92	1.4	72	0.013	100	100	100.5	-0.03	0.56		107.27	167.05	164.19	59.58	166.86	106	68	68	67		1.001	4.696	504
249	39.883	40.373		0.16	0.16	1.34	1.08	0.23	80	79	67	1.91	1.4	71	0.012	104	104	100.4	0.10	0.56		107.10	166.88	164.03	59.60	166.70	106	68	68	67		1.001	4.649	499
250	40.045	40.536		0.16	0.16	1.34	1.08	0.23	80	79	67	1.92	1.4	72	0.013	100	100	100.4	0.01	0.56		106.78	166.56	163.74	59.63	166.42	105	68	68	67		1.001	4.669	499
251	40.206	40.699		0.16	0.16	1.33	1.08	0.23	80	79	67	1.92	1.4	72	0.013	100	100	100.5	-0.10	0.56		106.51	166.35	163.53	59.65	166.16	105	68	68	67		1.001	4.705	502
252	40.367	40.862		0.16	0.16	1.34	1.07	0.23	80	79	67	1.9	1.4	72	0.013	100	100	100.4	0.07	0.58		106.15	166.06	163.23	59.72	165.87	104	68	68	67		1.001	4.860	517
253	40.529	41.024		0.16	0.16	1.33	1.08	0.23	80	79	67	1.9	1.4	72	0.012	104	104	100.5	-0.05	0.60		105.91	165.82	163.00	59.78	165.69	103	68	68	67		1.001	5.027	533
254	40.690	41.187		0.16	0.16	1.34	1.08	0.23	80	79	68	1.91	1.4	72	0.013	100	100	100.5	-0.06	0.53		105.59	165.56	162.79	59.85	165.43	102	68	68	68		1.001	4.380	463
255	40.851	41.350		0.16	0.16	1.34	1.07	0.23	80	79	67	1.9	1.4	72	0.010	114	114	100.3	0.23	0.58		105.26	165.34	162.53	59.91	165.17	102	68	68	67		1.001	4.865	513
256	41.013	41.513		0.16	0.16	1.34	1.07	0.23	80	79	68	1.91	1.4	72	0.014	97	97	100.3	-0.05	0.56		104.95	165.08	162.29	59.98	164.93	102	68	68	68		1.001	4.703	494
257	41.174	41.675		0.16	0.16	1.34	1.08	0.23	80	79	68	1.92	1.4	72	0.013	100	100	100.5	-0.11	0.58		104.67	164.91	162.09	60.03	164.69	101	68	68	68		1.001	4.863	510
258	41.335	41.838		0.16	0.16	1.34	1.08	0.23	80	79	68	1.91	1.4	72	0.014	96	97	100.5	-0.03	0.55		104.35	164.64	161.81	60.08	164.43	102	68	68	68		1.001	4.541	474
259	41.497	42.001		0.16	0.16	1.33	1.08	0.23	80	79	68	1.9	1.4	72	0.010	114	114	100.4	0.06	0.58		104.15	164.39	161.64	60.11	164.25	102	68	69	68		1.001	4.859	507
260	41.658	42.164		0.16	0.16	1.34	1.07	0.23	80	79	68	1.9	1.4	72	0.012	104	104	100.6	-0.15	0.58		103.86	164.13	161.37	60.10	163.97	101	68	69	68		1.001	4.860	505
261	41.820	42.327		0.16	0.16	1.34	1.07	0.23	80	79	68	1.92	1.4	72	0.011	109	109	100.5	0.13	0.55		103.60	163.83	161.10	60.10	163.70	99	68	69	68		1.001	4.542	471
262	41.981	42.489		0.16	0.16	1.34	1.07	0.23	80	79	68	1.91	1.4	72	0.011	108	108	100.3	0.10	0.60		103.36	163.63	160.87	60.09	163.45	135	68	69	68		1.001	5.022	520
263	42.142	42.651		0.16	0.16	1.34	1.07	0.23	80	79	68	1.91	1.4	77	0.012	104	104	100.4	-0.03	0.54		103.09	163.32	160.57	60.05	163.13	134	69	69	68		1.001	4.536	468
264	42.303	42.814		0.16	0.16	1.34	1.08	0.23	80	79	68	1.92	1.4	75	0.013	100	101	100.3	0.11	0.59		102.89	163.06	160.33	60.00	162.90	129	69	69	68		1.001	4.906	505
265	42.465	42.978		0.16	0.16	1.33	1.08	0.23	80	79	67	1.9	1.4	75	0.015	94	94	100.1	0.13	0.57		102.67	162.81	160.07	59.96	162.63	122	69	69	67		1.001	4.790	492
266	42.626	43.140		0.16	0.16	1.33	1.07	0.23	80	79	68	1.92	1.4	73	0.016	90	90	100.3	-0.12	0.55		102.51	162.60	159.87	59.89	162.40	117	69	69	68		1.001	4.571	469
267	42.788	43.303		0.16	0.16	1.33	1.07	0.23	80	79	68	1.91	1.4	72	0.012	104	104	100.3	-0.03	0.58		102.50	162.29	159.61	59.69	162.19	113	69	69	68		1.001	4.865	499
268	42.949	43.465		0.16	0.16	1.34	1.08	0.23	80	79	68	1.92	1.4	72	0.016	90	90	100.1	0.17	0.58		102.57	162.15	159.45	59.42	161.99	132	69	69	68		1.001	4.866	500
269	43.110	43.628		0.16	0.16	1.33	1.07	0.23	80	79	68	1.91	1.4	77	0.015	93	94	100.1	0.06	0.55		102.51	161.85	159.11	59.16	161.67	149	69	69	68		1.001	4.543	466
270	43.272	43.790		0.16	0.16	1.33	1.07	0.23	80	79	68	1.92	1.4	78	0.014	97	97	99.8	0.27	0.56		102.50	161.67	158.92	58.96	161.46	161	69	69	68		1.001	4.702	483
271	43.433	43.952		0.16	0.16	1.33	1.07	0.23	80	79	68	1.91	1.4	78	0.012	104	104	99.7	0.10	0.58		102.42	161.41	158.67	58.81	161.22	169.56751	69	69	68		1.001	4.865	499
272	43.594	44.115		0.16	0.16	1.33	1.07	0.23	80	79	67	1.93	1.4	79	0.013	100	101	99.5	0.18	0.56		102.33	161.16	158.46	58.69	161.02	177.58011	69	69	67		1.001	4.703	482
273	43.755	44.277		0.16	0.16	1.33	1.08	0.23	80	79	67	1.91	1.4	81	0.013	101	100	99.4	0.11	0.60		102.32	161.20	158.42	58.59	160.91	190	69	70	67		1.001	5.035	516
274	43.916	44.441		0.16	0.16	1.33	1.07	0.23	80	79	67	1.91	1.4	83	0.012	105	106	99.1	0.30	0.55		102.43	161.15	158.41	58.51	160.94	199	70	70	67		1.001	4.551	467
275	44.077	44.603		0.16	0.16	1.33	1.07	0.23	80	79	68	1.93	1.4	84	0.013	101	101	98.7	0.39	0.56		102.62	161.37	158.61	58.45	161.07	206	70	70	68		1.001	4.708	484
276	44.238	44.765		0.16	0.16	1.33	1.07	0.23	80	79	67	1.93	1.4	85	0.014	97	97	98.5	0.22	0.57		102.95	161.64	158.84	58.37	161.32	213	70	70	67		1.001	4.712	486
277	44.399	44.927		0.16	0.16	1.33	1.07	0.23	80	79	67	1.93	1.4	86	0.012	105	105	98.2	0.33	0.60		103.21	161.84	159.01	58.31	161.51	218	70	70	67		1.001	5.030	520
278	44.560	45.090		0.16	0.16	1.33	1.07	0.23	80	79	67	1.92	1.4	87	0.012	105	106	97.9	0.29	0.60		103.59	162.24	159.35	58.25	161.84	224	70	71	67		1.001	5.033	522
279	44.721	45.252		0.16	0.16	1.33	1.07	0.23	80	79	67	1.92	1.4	88	0.011	110	110	97.4	0.49	0.59		103.92	162.45	159.58	58.17	162.09	231	70	71	67		1.001	4.903	510
280	44.882	45.413		0.16	0.16	1.33	1.07	0.23	80	79	67	1.92	1.4	89	0.013	101	101	97.1	0.26	0.60		104.34	162.79	159.97	58.09	162.43	240	70	71	67		1.001	4.964	519
281	45.043	45.576		0.16	0.16	1.33	1.07	0.23	80	79	67	1.93	1.4	90	0.010	116	116	96.7	0.45	0.56		104.80	163.19	160.33	58.01	162.81	248	70	71	67		1.001	4.707	494
282	45.204	45.738		0.16	0.16	1.33	1.07	0.23	80	79	67	1.94	1.4	91	0.011	110	110	96.2	0.46	0.60		105.41	163.65	160.85	57.94	163.35	257	71	71	67		1.001	5.028	531
283	45.365	45.900		0.16	0.16	1.33	1.07	0.23	80	79	66	1.92	1.4	92	0.013	102	101	95.9	0.32	0.57		105.84	164.03	161.19	57.88	163.72	268	71	71	66		1.001	4.709	499
284	45.525	46.062		0.16	0.16	1.33	1.07	0.23	80	79	67	1.94	1.4	93	0.013	101	102	95.4	0.47	0.57		106.43	164.73	161.83	57.84	164.26	279	71	71	67		1.001	4.709	502
285	45.686	46.223		0.16	0.16	1.34	1.07	0.23	80	79	66	1.93	1.4	94	0.011	111	110	95.0	0.45	0.58		107.08	165.35	162.42	57.81	164.89	289	71	72	66		1.001	4.866	522
286	45.847	46.386		0.16	0.16	1.34	1.08	0.23	80	79	66	1.93	1.4	96	0.011	111	111	94.4	0.54	0.58		107.75	165.98	163.07	57.81	165.57	299	71	72	66		1.001	4.866	525
287	46.007	46.548		0.16	0.16	1.34	1.07	0.23	80	79	66	1.95	1.4	97	0.011	110	111	94.1	0.32	0.55		108.39	166.69	163.74	57.83	166.22	309	71	72	66		1.001	4.543	493
288	46.168	46.709		0.16	0.16	1.34	1.07	0.23	80	79	66	1.94	1.4	99	0.013	102	101	93.7	0.44	0.57		109.08	167.40	164.43	57.84	166.93	318	72	72	66		1.001	4.710	514
289	46.329	46.871		0.16	0.16	1.34	1.07	0.23	80	79	66	1.93	1.4	100	0.012	106	106	93.0	0.67	0.64		109.86	168.34	165.34	57.87	167.72	326	72	72	66		1.001	5.359	589
290	46.489	47.033		0.16	0.16	1.34	1.07	0.23	80	79	66	1.94	1.4	102	0.011	111	111	92.7	0.32	0.58		110.71	169.17	166.14	57.95	168.66	333	72	73	66		1.001	4.872	540
291	46.650	47.195		0.16	0.16	1.34	1.06	0.23	80	79	66	1.95	1.4	103	0.012	107	107	92.2	0.51	0.55		111.50	170.19	167.11	58.11	169.61	340	72	73	66		1.001	4.550	508
292	46.810	47.356		0.16	0.16	1.33	1.07	0.23	80	79	66	1.94	1.4	104	0.013	102	102	91.7	0.50	0.59		112.15	171.07	168.12	58.30	170.45	347	73	73	66		1.001	4.882	548

Elapsed Time	Particulate Sampling Data																	Fuel Weight, lb		Flow, gpm		Temperature Data, oF												
	Gas Meter Cubic Feet (1)	Gas Meter Cubic Feet (2)	Gas Meter Cubic Feet (amb)	Sample Rate, cfm (1)	Sample Rate, cfm (2)	Orifice dH (1)	Orifice dH (2)	Orifice dH (amb)	Meter oF (1)	Meter oF (2)	Meter oF (amb)	Meter Vac. In. Hg. (1)	Meter Vac. In. Hg. (2)	Dilution Tunnel Temp.	Dilution Tunnel dP	Pro. Rate (%) (1)	Pro. Rate (%) (2)	Scale Reading	Weight Change	Load Side Liquid Flow Rate	Boiler Side Liquid Flow Rate (optional)	Thermopile ΔT	Boiler to Heat Exch. Temp.	Heat Exch to Boiler Temp.	Inlet Load Temp.	Outlet Load Temp.	Stack	Filter (1)	Filter (2)	Ambient		Specific Heat of Inlet Water (BTU/lb-°F)	Mass Flow Rate of Inlet Water (lb/min)	Heat Output, Btu
293	46.971	47.517		0.16	0.16	1.33	1.07	0.23	80	79	66	1.94	1.4	105	0.012	107	106	91.1	0.59	0.58		112.91	171.99	168.85	58.49	171.39	354	73	74	66		1.001	4.873	551
294	47.132	47.679		0.16	0.16	1.34	1.07	0.23	80	79	66	1.96	1.4	107	0.011	112	112	90.6	0.51	0.57		113.91	173.16	170.05	58.63	172.54	360	73	74	66		1.001	4.777	545
295	47.293	47.841		0.16	0.16	1.33	1.06	0.23	80	79	66	1.94	1.5	107	0.014	99	99	90.0	0.51	0.55		114.82	174.19	171.05	58.78	173.60	363	74	74	66		1.001	4.607	530
296	47.453	48.001		0.16	0.16	1.33	1.06	0.23	80	79	66	1.95	1.4	108	0.012	107	106	89.4	0.59	0.60		115.75	175.32	172.14	58.91	174.66	366	74	75	66		1.001	5.006	580
297	47.613	48.162		0.16	0.16	1.33	1.07	0.23	80	79	69	1.96	1.5	110	0.011	111	111	88.8	0.61	0.56		116.83	176.51	173.23	59.01	175.84	369	74	75	69		1.001	4.707	551
298	47.774	48.324		0.16	0.16	1.32	1.06	0.23	80	79	67	1.96	1.5	110	0.011	112	112	88.5	0.34	0.60		117.90	177.67	174.41	59.07	176.97	371	75	75	67		1.001	5.028	593
299	47.934	48.484		0.16	0.16	1.32	1.06	0.23	80	79	67	1.96	1.5	110	0.012	107	106	88.0	0.48	0.56		119.28	179.01	175.70	59.04	178.32	372	75	75	67		1.001	4.704	562
300	48.094	48.645		0.16	0.16	1.32	1.06	0.23	80	79	67	1.96	1.5	110	0.013	103	102	87.4	0.61	0.56		120.38	179.78	176.47	58.86	179.24	373	75	76	67		1.001	4.704	567
301	48.254	48.807		0.16	0.16	1.32	1.06	0.23	80	79	67	1.96	1.5	110	0.012	107	107	87.0	0.40	0.53		121.49	180.91	177.52	58.70	180.19	375	75	76	67		1.001	4.388	534
302	48.414	48.967		0.16	0.16	1.32	1.05	0.23	80	79	67	1.95	1.5	110	0.014	99	98	86.4	0.60	0.57		122.80	181.93	178.58	58.55	181.35	373	75	76	67		1.001	4.711	579
303	48.575	49.127		0.16	0.16	1.33	1.06	0.23	80	79	67	1.97	1.5	111	0.013	103	102	86.0	0.45	0.59		123.94	183.00	179.61	58.43	182.37	374	76	76	67		1.001	4.879	605
304	48.735	49.288		0.16	0.16	1.33	1.06	0.23	80	79	67	1.96	1.5	99	0.012	106	106	85.7	0.27	0.53		125.43	184.38	180.97	58.34	183.77	344	75	76	67		1.001	4.386	551
305	48.895	49.450		0.16	0.16	1.33	1.06	0.23	80	79	66	1.94	1.5	87	0.014	97	97	85.6	0.13	0.57		126.27	184.99	181.59	58.26	184.53	316	74	75	66		1.001	4.714	596
306	49.056	49.610		0.16	0.16	1.33	1.06	0.23	80	79	66	1.94	1.4	83	0.012	105	103	85.4	0.19	0.60		126.76	185.38	181.94	58.19	184.95	299	73	74	66		1.001	5.028	638
307	49.216	49.772		0.16	0.16	1.33	1.06	0.23	80	79	66	1.93	1.4	80	0.012	104	104	85.1	0.24	0.60		127.15	185.76	182.31	58.15	185.29	285	72	73	66		1.001	5.030	640
308	49.377	49.933		0.16	0.16	1.33	1.07	0.23	80	79	66	1.93	1.4	78	0.012	104	104	85.2	-0.05	0.57		127.49	185.95	182.57	58.09	185.58	274	71	72	66		1.001	4.709	601
309	49.538	50.095		0.16	0.16	1.34	1.06	0.23	80	79	66	1.93	1.4	77	0.011	109	109	85.1	0.07	0.57		127.69	186.12	182.73	58.06	185.75	264	71	72	66		1.001	4.723	604
310	49.699	50.256		0.16	0.16	1.34	1.07	0.23	80	79	66	1.94	1.4	76	0.014	96	96	85.0	0.07	0.57		127.79	186.20	182.76	58.03	185.82	256	71	72	66		1.001	4.710	603
311	49.860	50.418		0.16	0.16	1.34	1.07	0.23	80	79	66	1.94	1.4	76	0.012	104	104	85.1	-0.06	0.58		127.91	186.20	182.79	57.98	185.89	248	70	72	66		1.001	4.836	619
312	50.021	50.581		0.16	0.16	1.34	1.07	0.23	80	79	66	1.93	1.4	75	0.011	109	109	84.9	0.14	0.56		128.05	186.27	182.90	57.92	185.97	241	70	71	66		1.001	4.646	596
313	50.182	50.743		0.16	0.16	1.33	1.07	0.23	80	79	66	1.93	1.4	75	0.015	93	93	84.9	0.03	0.58		128.02	186.17	182.79	57.85	185.87	235	70	71	66		1.001	4.870	624
314	50.343	50.905		0.16	0.16	1.34	1.07	0.23	80	79	66	1.92	1.4	74	0.012	104	104	84.8	0.15	0.60		128.02	186.08	182.69	57.79	185.80	230	70	71	66		1.001	5.030	645
315	50.504	51.068		0.16	0.16	1.33	1.08	0.23	80	79	66	1.94	1.4	75	0.013	100	101	84.9	-0.11	0.60		127.95	185.92	182.54	57.71	185.66	225	70	71	66		1.001	5.036	645
316	50.665	51.230		0.16	0.16	1.34	1.07	0.23	79	79	65	1.92	1.4	73	0.012	104	104	84.9	0.03	0.60		127.89	185.88	182.46	57.67	185.56	222	69	70	65		1.001	5.032	644
317	50.826	51.394		0.16	0.16	1.34	1.07	0.23	79	79	66	1.92	1.4	72	0.012	104	105	84.9	0.00	0.43		127.78	185.94	183.40	57.73	185.51	219	69	70	66		1.001	3.578	458
318	50.987	51.556		0.16	0.16	1.34	1.07	0.23	79	79	66	1.93	1.4	71	0.014	96	96	84.7	0.15	0.58		127.57	186.09	182.80	57.89	185.45	215	69	70	66		1.001	4.871	622
319	51.148	51.718		0.16	0.16	1.34	1.07	0.23	79	79	66	1.92	1.4	71	0.012	104	104	84.8	-0.05	0.49		127.63	185.96	182.77	57.99	185.62	211	69	70	66		1.001	4.066	520
320	51.310	51.880		0.16	0.16	1.34	1.07	0.23	79	79	66	1.93	1.4	71	0.012	104	104	84.7	0.02	0.49		127.39	185.92	182.64	58.11	185.50	207	69	70	66		1.001	4.060	518
321	51.471	52.043		0.16	0.16	1.34	1.07	0.23	79	79	66	1.92	1.4	71	0.014	96	96	84.8	-0.04	0.53		127.07	185.88	182.62	58.22	185.29	202	69	69	66		1.001	4.381	557
322	51.632	52.206		0.16	0.16	1.33	1.07	0.23	79	79	66	1.93	1.4	71	0.014	96	96	84.9	-0.07	0.53		126.96	185.75	182.43	58.31	185.27	198	68	69	66		1.001	4.376	556
323	51.793	52.368		0.16	0.16	1.33	1.07	0.23	79	79	66	1.93	1.4	71	0.014	96	96	84.7	0.13	0.51		126.85	185.57	182.32	58.39	185.24	195	68	69	66		1.001	4.218	536
324	51.954	52.530		0.16	0.16	1.33	1.07	0.23	79	79	66	1.94	1.4	71	0.012	104	104	84.8	-0.04	0.53		126.61	185.46	182.23	58.48	185.10	191	68	69	66		1.001	4.382	555
325	52.115	52.693		0.16	0.16	1.33	1.07	0.23	79	79	67	1.93	1.4	73	0.013	100	100	84.8	0.00	0.51		126.33	185.35	182.06	58.55	184.88	188	68	69	67		1.001	4.224	534
326	52.276	52.856		0.16	0.16	1.34	1.07	0.23	79	79	67	1.91	1.4	72	0.012	104	104	84.8	0.01	0.51		126.26	185.23	181.96	58.59	184.85	184	68	69	67		1.001	4.229	535
327	52.437	53.018		0.16	0.16	1.33	1.07	0.23	79	79	67	1.93	1.4	72	0.012	104	104	84.8	-0.06	0.51		126.10	185.20	181.89	58.59	184.69	181	68	69	67		1.001	4.210	532
328	52.598	53.180		0.16	0.16	1.33	1.07	0.23	79	79	66	1.93	1.4	71	0.012	104	104	84.8	0.04	0.53		126.11	185.05	181.80	58.48	184.59	178	68	69	66		1.001	4.410	557
329	52.759	53.342		0.16	0.16	1.33	1.07	0.23	79	79	67	1.92	1.4	71	0.013	100	100	84.9	-0.16	0.53		126.05	184.85	181.61	58.37	184.41	174	68	69	67		1.001	4.390	554
330	52.920	53.506		0.16	0.16	1.33	1.07	0.23	79	79	66	1.92	1.4	71	0.013	100	101	84.8	0.11	0.49		125.98	184.73	181.52	58.30	184.27	171	68	69	66		1.001	4.068	513
331	53.081	53.668		0.16	0.16	1.33	1.07	0.23	79	79	66	1.93	1.4	71	0.014	96	96	84.8	0.02	0.51		125.79	184.49	181.25	58.28	184.06	168	68	69	66		1.001	4.224	532
332	53.242	53.830		0.16	0.16	1.33	1.07	0.23	79	79	66	1.92	1.4	71	0.014	96	96	84.8	0.02	0.55		125.65	184.33	181.17	58.26	183.91	166	68	69	66		1.001	4.553	573
333	53.403	53.992		0.16	0.16	1.33	1.07	0.23	79	79	66	1.92	1.4	71	0.012	104	104	84.8	0.01	0.55		125.56	184.18	181.06	58.29	183.85	163	68	68	66		1.001	4.556	573
334	53.564	54.155		0.16	0.16	1.33	1.07	0.23	79	79	66	1.93	1.4	70	0.013	100	100	84.8	-0.04	0.49		125.36	184.14	180.97	58.30	183.67	161	68	68	66		1.001	4.063	510
335	53.725	54.317		0.16	0.16	1.33	1.07	0.23	79	79	66	1.92	1.4	70	0.013	100	99	84.7	0.10	0.51		125.18	183.84	180.71	58.32	183.50	158	68	68	66		1.001	4.226	530
336	53.886	54.479		0.16	0.16	1.32	1.07	0.23	79	79	66	1.92	1.4	70	0.012	104	103	84.9	-0.15	0.53		124.88	183.69	180.62	58.35	183.24	156	68	68	66		1.001	4.384	548
337	54.047	54.641		0.16	0.16	1.33	1.08	0.23	79	79	66	1.94	1.4	70	0.011	108	108	84.7	0.13	0.55		124.69	183.48	180.38	58.38	183.07	154	68	68	66		1.001	4.550	568
338	54.208	54.804		0.16	0.16	1.33	1.07	0.23	79	79	66	1.91	1.4	70	0.011	108	109	84.8	-0.06	0.51		124.51	183.32	180.26	58.41	182.92	152	68	68	66		1.001	4.224	527
339	54.369	54.968		0.16	0.16	1.33	1.07	0.23	79	79	66	1.92	1.4	69	0.012	104	105	84.8	-0.05	0.53		124.29	183.14	180.06	58.44	182.73	149	67	68	66		1.001	4.385	546
340	54.530	55.130		0.16	0.16	1.33	1.07	0.23	79	78	65	1.92	1.4	70	0.013	100	100	84.8	0.02	0.53		124.21	182.99	179.86	58.45	182.66	147	67	68	65		1.001	4.387	546
341	54.691	55.292		0.16	0.16	1.33	1.08	0.23	79	78	66	1.93	1.4	70	0.013	100	100	85.0	-0.13	0.49		123.82	182.77	179.67	58.45	182.27	146	67	68	66		1.001	4.066	504
342	54.852	55.454		0.16	0.16	1.33	1.08	0.23	79	78	65	1.93	1.4	70	0.012	104	104	84.8	0.16	0.53		123.68	182.54	179.42	58.50	182.18	143	67	68	65		1.001	4.385	543
343	55.013	55.617		0.16	0.16	1.33	1.08	0.23	79	78	66	1.93	1.4	69	0.014	96	96	84.9	-0.12	0.51		123.41	182.43	179.40	58.59	182.00	141	67	68	66		1.001	4.227	522
344	55.174	55.780		0.16	0.16	1.33	1.07	0.23	79	78	66	1.94	1.4	69	0.012	104	104	84.8	0.10	0.55		123.08	182.18	179.14	58.73	181.81	140	67	67	66		1.001	4.555	561
345	55.335	55.942		0.16	0.16	1.33	1.07	0.23	79	78	66	1.93	1.4	69	0.012	104	104	84.9	-0.11	0.55		122.80	182.00	179.00	58.84	181.64	138	67	67	66		1.001	4.542	558
346	55.496	56.104		0.16	0.16	1.33	1.07	0.23	79	78	66	1.94	1.4	72	0.011	109	109	84.8	0.17	0.50		122.47	181.86	178.92	58.93	181.40	163	67	68	66		1.001	4.192	514
347	55.656	56.266		0.16	0.16	1.33	1.07	0.23	79	78	66	1.94	1.4	81	0.014	96	97	84.4	0.32	0.52		122.14	181.41	178.48	59.02	181.16	188	68	69	66		1.001	4.310	527
348	55.817	56.429		0.16	0.16	1.34	1.07	0.23	79	78	66	1.92	1.4	74	0.013	100	101	84.5	-0.11	0.51		121.68	181.25	178.31	59.10	180.77	171	67	68	66		1.001	4.286	522
349	55.978	56.591		0.16	0.16	1.34	1.07	0.23	79	78	66	1.93	1.4	71	0.015	93	93	84.4	0.10	0.53		121.58	181.20	178.27	59.16	180.74	159	67	67	66		1.001	4.384	534
350	56.139	56.753		0.16	0.16	1.34	1.07	0.23	79	78	66	1.92	1.4	70	0.011	108	108	84.5	-0.04	0.55		121.34	181.05	178.14	59.25	180.59	152	67	68	66		1.001	4.550	553
351	56.300	56.916		0.16	0.16	1.34	1.07	0.23	79	78	66	1.91	1.4	70	0.012	104	104	84.5	0.02	0.53		121.05	180.83	177.93	59.32	180.38	147	67	67	66		1.001	4.386	532
352	56.462	57.079		0.16	0.16	1.34	1.08	0.23	79	78	66	1.92	1.4	70	0.012	104	104	84.5	0.01	0.49		120.89	180.54	177.64	59.38	180.27	143	67	67	66		1.001	4.059	491
353	56.623	57.241		0.16	0.16	1.34	1.07	0.23	79	78	66	1.93	1.4	70	0.013	100	100	84.4	0.03	0.51		120.61	180.40	177.53	59.45	180.06	140	67	67	66		1.001	4.219	509

Elapsed Time	Particulate Sampling Data																	Fuel Weight, lb		Flow, gpm		Temperature Data, oF												
	Gas Meter Cubic Feet (1)	Gas Meter Cubic Feet (2)	Gas Meter Cubic Feet (amb)	Sample Rate, cfm (1)	Sample Rate, cfm (2)	Orifice dH (1)	Orifice dH (2)	Orifice dH (amb)	Meter oF (1)	Meter oF (2)	Meter oF (amb)	Meter Vac. In. Hg. (1)	Meter Vac. In. Hg. (2)	Dilution Tunnel Temp.	Dilution Tunnel dP	Pro. Rate (%) (1)	Pro. Rate (%) (2)	Scale Reading	Weight Change	Load Side Liquid Flow Rate	Boiler Side Liquid Flow Rate (optional)	Thermopile ΔT	Boiler to Heat Exch. Temp.	Heat Exch to Boiler Temp.	Inlet Load Temp.	Outlet Load Temp.	Stack	Filter (1)	Filter (2)	Ambient		Specific Heat of Inlet Water (BTU/lb-°F)	Mass Flow Rate of Inlet Water (lb/min)	Heat Output, Btu
354	56.784	57.404		0.16	0.16	1.34	1.07	0.23	79	78	66	1.93	1.4	70	0.012	104	104	84.5	-0.06	0.53		120.30	180.28	177.36	59.54	179.85	137	67	67	66		1.001	4.378	527
355	56.945	57.566		0.16	0.16	1.34	1.08	0.23	79	78	66	1.91	1.4	70	0.011	108	108	84.5	-0.05	0.51		120.00	179.95	176.99	59.64	179.64	136	67	67	66		1.001	4.224	508
356	57.106	57.728		0.16	0.16	1.33	1.08	0.23	79	78	66	1.93	1.4	71	0.014	96	96	84.5	0.07	0.53		119.62	179.86	176.90	59.75	179.37	133	67	67	66		1.001	4.382	525
357	57.267	57.891		0.16	0.16	1.34	1.08	0.23	79	78	66	1.93	1.4	71	0.012	104	104	84.4	0.05	0.51		119.44	179.63	176.70	59.85	179.29	132	67	68	66		1.001	4.223	505
358	57.428	58.053		0.16	0.16	1.34	1.07	0.23	79	78	66	1.93	1.4	71	0.013	100	100	84.4	-0.02	0.51		119.13	179.43	176.58	59.96	179.09	130	67	68	66		1.001	4.220	503
359	57.589	58.216		0.16	0.16	1.33	1.07	0.23	79	78	66	1.91	1.4	71	0.011	108	109	84.4	0.03	0.51		118.88	179.30	176.38	60.06	178.93	129	67	68	66		1.001	4.220	502
360	57.750	58.378		0.16	0.16	1.34	1.07	0.23	79	78	66	1.91	1.4	71	0.012	104	104	84.4	-0.04	0.51		118.46	179.08	176.11	60.16	178.62	127	67	68	66		1.001	4.214	500
361	57.911	58.541		0.16	0.16	1.34	1.07	0.23	79	78	67	1.93	1.4	71	0.012	104	104	84.4	0.05	0.49		118.19	178.77	175.85	60.25	178.44	126	67	68	67		1.001	4.061	480
362	58.072	58.703		0.16	0.16	1.34	1.07	0.23	79	78	66	1.92	1.4	71	0.011	108	108	84.5	-0.11	0.45		117.88	178.56	175.64	60.31	178.19	125	67	68	66		1.001	3.735	441
363	58.234	58.865		0.16	0.16	1.34	1.07	0.23	79	78	67	1.93	1.4	71	0.013	100	100	84.4	0.11	0.49		117.61	178.37	175.48	60.36	177.96	123	67	68	67		1.001	4.058	478
364	58.395	59.028		0.16	0.16	1.34	1.07	0.23	79	78	67	1.91	1.4	71	0.011	108	109	84.3	0.06	0.49		117.41	178.16	175.28	60.40	177.80	122	67	68	67		1.001	4.056	477
365	58.556	59.190		0.16	0.16	1.34	1.07	0.23	79	78	67	1.92	1.4	71	0.013	100	100	84.5	-0.12	0.51		117.26	177.95	175.04	60.41	177.67	121	68	68	67		1.001	4.222	496
366	58.717	59.353		0.16	0.16	1.34	1.07	0.23	79	78	67	1.93	1.4	71	0.012	104	104	84.4	0.09	0.54		116.97	177.73	174.82	60.45	177.42	120	68	68	67		1.001	4.481	525
367	58.878	59.515		0.16	0.16	1.33	1.07	0.23	79	78	67	1.92	1.4	72	0.012	104	104	84.5	-0.13	0.53		116.71	177.56	174.71	60.46	177.17	119	68	68	67		1.001	4.380	512
368	59.039	59.677		0.16	0.16	1.34	1.07	0.23	79	78	67	1.93	1.4	72	0.012	104	104	84.4	0.07	0.53		116.48	177.28	174.39	60.49	176.97	118	68	68	67		1.001	4.377	510
369	59.200	59.840		0.16	0.16	1.33	1.07	0.23	79	78	67	1.94	1.4	72	0.013	100	100	84.6	-0.16	0.54		116.18	177.12	174.29	60.52	176.70	118	68	68	67		1.001	4.535	528
370	59.361	60.003		0.16	0.16	1.34	1.07	0.23	79	78	67	1.91	1.4	72	0.011	109	109	84.6	0.03	0.51		115.96	176.79	173.88	60.54	176.50	117	68	68	67		1.001	4.218	490
371	59.522	60.165		0.16	0.16	1.33	1.07	0.23	79	78	67	1.93	1.4	72	0.011	109	109	84.5	0.04	0.49		115.74	176.67	173.81	60.57	176.31	115	68	68	67		1.001	4.054	470
372	59.683	60.327		0.16	0.16	1.34	1.07	0.23	79	78	67	1.93	1.4	72	0.013	100	100	84.4	0.08	0.56		115.50	176.38	173.52	60.61	176.11	115	68	68	67		1.001	4.701	544
373	59.844	60.489		0.16	0.16	1.33	1.07	0.23	79	78	67	1.93	1.4	72	0.012	104	104	84.5	-0.05	0.49		115.21	176.19	173.37	60.63	175.85	114	68	68	67		1.001	4.051	467
374	60.005	60.652		0.16	0.16	1.33	1.07	0.23	79	78	67	1.93	1.4	72	0.012	104	105	84.5	-0.03	0.49		114.99	175.98	173.16	60.65	175.64	114	68	68	67		1.001	4.053	467
375	60.166	60.814		0.16	0.16	1.33	1.07	0.23	79	79	67	1.93	1.4	72	0.013	100	100	84.6	-0.06	0.54		114.62	175.64	172.84	60.69	175.30	113	68	68	67		1.001	4.537	521
376	60.327	60.976		0.16	0.16	1.33	1.07	0.23	79	78	67	1.93	1.4	72	0.011	109	109	84.6	-0.01	0.51		114.43	175.53	172.73	60.72	175.14	112	68	68	67		1.001	4.212	483
377	60.488	61.139		0.16	0.16	1.33	1.07	0.23	79	79	67	1.93	1.4	72	0.014	96	97	84.5	0.09	0.56		114.25	175.35	172.57	60.72	174.97	110	68	68	67		1.001	4.700	538
378	60.649	61.301		0.16	0.16	1.32	1.07	0.23	79	79	67	1.94	1.4	77	0.014	97	96	84.3	0.20	0.51		114.05	175.06	172.33	60.72	174.77	144	69	69	67		1.001	4.216	481
379	60.810	61.463		0.16	0.16	1.33	1.07	0.23	79	79	68	1.92	1.4	80	0.011	109	109	84.3	0.01	0.51		113.78	174.78	172.05	60.72	174.50	148	68	69	68		1.001	4.216	480
380	60.971	61.625		0.16	0.16	1.33	1.07	0.23	79	79	68	1.91	1.4	74	0.013	100	100	84.2	0.07	0.51		113.63	174.56	171.82	60.70	174.33	135	68	68	68		1.001	4.214	479
381	61.131	61.787		0.16	0.16	1.33	1.07	0.23	79	79	68	1.93	1.4	72	0.012	103	104	84.3	-0.07	0.54		113.40	174.39	171.66	60.55	173.95	127	68	68	68		1.001	4.525	514
382	61.292	61.949		0.16	0.16	1.33	1.07	0.23	79	79	68	1.91	1.4	72	0.013	100	100	84.3	0.01	0.52		113.55	174.18	171.50	60.29	173.84	122	68	68	68		1.001	4.370	497
383	61.453	62.112		0.16	0.16	1.33	1.07	0.23	79	79	68	1.93	1.4	71	0.015	93	93	84.2	0.02	0.47		113.52	173.94	171.18	60.03	173.55	119	68	68	68		1.001	3.937	447
384	61.615	62.274		0.16	0.16	1.33	1.07	0.23	79	79	68	1.92	1.4	71	0.012	104	104	84.3	-0.02	0.51		113.52	173.71	170.95	59.80	173.32	116	68	68	68		1.001	4.221	480
385	61.775	62.436		0.16	0.16	1.33	1.07	0.23	79	79	67	1.92	1.4	71	0.012	103	104	84.3	-0.02	0.49		113.53	173.46	170.66	59.60	173.13	115	68	68	67		1.001	4.063	462
386	61.936	62.598		0.16	0.16	1.33	1.07	0.23	79	79	67	1.92	1.4	71	0.014	96	96	84.2	0.09	0.51		113.45	173.25	170.44	59.44	172.89	113	68	68	67		1.001	4.245	482
387	62.097	62.762		0.16	0.16	1.34	1.07	0.23	79	79	67	1.92	1.4	71	0.011	108	110	84.2	0.00	0.49		113.38	172.98	170.22	59.36	172.74	112	68	68	67		1.001	4.070	462
388	62.258	62.923		0.16	0.16	1.34	1.07	0.23	80	79	67	1.93	1.4	70	0.013	99	99	84.2	-0.01	0.49		113.15	172.83	170.04	59.28	172.43	111	68	68	67		1.001	4.064	460
389	62.419	63.085		0.16	0.16	1.34	1.07	0.23	80	79	67	1.92	1.4	70	0.014	96	96	84.3	-0.11	0.55		113.00	172.54	169.80	59.21	172.22	110	68	68	67		1.001	4.544	514
390	62.580	63.248		0.16	0.16	1.34	1.07	0.23	80	79	67	1.91	1.4	70	0.012	104	104	84.2	0.08	0.54		112.88	172.42	169.64	59.18	172.06	109	68	68	67		1.001	4.540	513
391	62.741	63.411		0.16	0.16	1.34	1.07	0.23	80	79	67	1.92	1.4	70	0.013	99	100	84.2	0.07	0.53		112.64	172.13	169.35	59.18	171.81	108	68	68	67		1.001	4.388	495
392	62.902	63.573		0.16	0.16	1.34	1.07	0.23	80	79	67	1.92	1.4	70	0.012	104	103	84.4	-0.22	0.53		112.35	171.88	169.14	59.16	171.51	108	68	68	67		1.001	4.388	494
393	63.063	63.735		0.16	0.16	1.34	1.07	0.23	80	79	66	1.92	1.4	70	0.014	96	96	84.2	0.19	0.49		112.20	171.64	168.87	59.15	171.35	107	68	68	66		1.001	4.068	457
394	63.224	63.897		0.16	0.16	1.33	1.07	0.23	80	79	67	1.93	1.4	70	0.010	113	113	84.2	-0.03	0.51		112.02	171.44	168.68	59.14	171.16	106	68	68	67		1.001	4.232	475
395	63.385	64.060		0.16	0.16	1.34	1.07	0.23	80	79	67	1.91	1.4	70	0.012	104	104	84.1	0.09	0.55		111.82	171.21	168.48	59.13	170.95	106	68	68	67		1.001	4.557	510
396	63.546	64.223		0.16	0.16	1.34	1.07	0.23	80	79	66	1.93	1.4	70	0.011	108	109	84.2	-0.06	0.49		111.61	171.00	168.27	59.09	170.70	105	68	68	66		1.001	4.069	455
397	63.707	64.385		0.16	0.16	1.34	1.07	0.23	80	79	67	1.93	1.4	70	0.012	104	103	84.3	-0.07	0.51		111.31	170.77	168.03	59.04	170.35	105	68	68	67		1.001	4.233	472
398	63.869	64.547		0.16	0.16	1.34	1.07	0.23	80	79	67	1.92	1.4	69	0.012	104	103	84.2	0.02	0.53		111.21	170.50	167.78	58.98	170.19	104	68	68	67		1.001	4.391	489
399	64.030	64.710		0.16	0.16	1.34	1.08	0.23	80	79	67	1.91	1.4	69	0.013	99	100	84.2	0.04	0.49		111.08	170.28	167.61	58.92	170.00	103	68	68	67		1.001	4.067	452
400	64.191	64.873		0.16	0.16	1.33	1.07	0.23	80	79	66	1.91	1.4	69	0.013	99	100	84.1	0.14	0.51		110.75	170.03	167.34	58.85	169.60	103	68	68	66		1.001	4.217	468
401	64.352	65.035		0.16	0.16	1.34	1.07	0.23	80	79	66	1.91	1.4	69	0.013	99	99	84.2	-0.14	0.47		110.77	169.81	167.09	58.78	169.55	103	68	68	66		1.001	3.948	438
402	64.513	65.197		0.16	0.16	1.34	1.08	0.23	80	79	66	1.91	1.4	69	0.012	103	103	84.2	0.00	0.51		110.59	169.63	166.87	58.71	169.30	102	68	68	66		1.001	4.234	469
403	64.674	65.360		0.16	0.16	1.34	1.08	0.23	80	79	66	1.92	1.4	69	0.011	108	109	84.2	-0.02	0.52		110.49	169.34	166.66	58.61	169.10	102	67	68	66		1.001	4.348	481
404	64.835	65.522		0.16	0.16	1.34	1.07	0.23	80	79	66	1.92	1.4	69	0.012	103	103	84.1	0.11	0.53		110.35	169.14	166.46	58.53	168.88	102	67	68	66		1.001	4.378	484
405	64.997	65.685		0.16	0.16	1.34	1.08	0.23	80	79	66	1.93	1.4	69	0.013	100	100	84.3	-0.16	0.49		110.11	168.85	166.15	58.46	168.57	101	67	68	66		1.001	4.071	449
406	65.158	65.848		0.16	0.16	1.34	1.07	0.23	80	79	66	1.92	1.4	69	0.013	99	100	84.2	0.06	0.55		109.88	168.72	166.00	58.40	168.27	101	67	67	66		1.001	4.559	502
407	65.319	66.010		0.16	0.16	1.34	1.08	0.23	80	79	66	1.93	1.4	69	0.013	99	99	84.3	-0.06	0.53		109.82	168.48	165.76	58.35	168.17	102	67	67	66		1.001	4.389	483
408	65.480	66.172		0.16	0.16	1.33	1.08	0.23	80	79	66	1.91	1.4	69	0.013	99	99	84.4	-0.11	0.51		109.66	168.25	165.62	58.31	167.97	100	67	67	66		1.001	4.223	464
409	65.642	66.336		0.16	0.16	1.34	1.08	0.23	80	79	66	1.92	1.4	69	0.013	100	101	84.2	0.16	0.51		109.40	168.02	165.42	58.28	167.68	134	67	67	66		1.001	4.225	463
410	65.803	66.498		0.16	0.16	1.34	1.07	0.23	80	79	66	1.94	1.4	74	0.011	109	109	84.1	0.12	0.49		109.18	167.71	165.09	58.26	167.44	137	67	68	66		1.001	4.061	444
411	65.964	66.660		0.16	0.16	1.34	1.08	0.23	80	79	66	1.92	1.4	71	0.012	104	104	84.2	-0.07	0.53		108.92	167.51	164.89	58.26	167.18	129	67	67	66		1.001	4.394	479
412	66.125	66.822		0.16	0.16	1.34	1.08	0.23	80	79	66	1.93	1.4	71	0.013	100	100	84.1	0.09	0.49		108.59	167.23	164.61	58.28	166.86	121	67	67	66		1.001	4.071	443
413	66.286	66.985		0.16	0.16	1.34	1.08	0.23	80	79	66	1.92	1.4	69	0.013	99	100	84.1	-0.06	0.51		108.39	167.02	164.38	58.33	166.72	115	67	67	66		1.001	4.230	459
414	66.448	67.148		0.16	0.16	1.33	1.07	0.23	79	79	66	1.93	1.4	69	0.011	109	109	84.1	0.09	0.53		108.11	166.78	164.21	58.45	166.57	111	67	67	66		1.001	4.391	475

Elapsed Time	Particulate Sampling Data																	Fuel Weight, lb		Flow, gpm		Temperature Data, oF												
	Gas Meter Cubic Feet (1)	Gas Meter Cubic Feet (2)	Gas Meter Cubic Feet (amb)	Sample Rate, cfm (1)	Sample Rate, cfm (2)	Orifice dH (1)	Orifice dH (2)	Orifice dH (amb)	Meter oF (1)	Meter oF (2)	Meter oF (amb)	Meter Vac. In. Hg. (1)	Meter Vac. In. Hg. (2)	Dilution Tunnel Temp.	Dilution Tunnel dP	Pro. Rate (%) (1)	Pro. Rate (%) (2)	Scale Reading	Weight Change	Load Side Liquid Flow Rate	Boiler Side Liquid Flow Rate (optional)	Thermopile ΔT	Boiler to Heat Exch. Temp.	Heat Exch to Boiler Temp.	Inlet Load Temp.	Outlet Load Temp.	Stack	Filter (1)	Filter (2)	Ambient		Specific Heat of Inlet Water (BTU/lb-°F)	Mass Flow Rate of Inlet Water (lb/min)	Heat Output, Btu
415	66.609	67.311		0.16	0.16	1.34	1.07	0.23	79	79	66	1.93	1.4	69	0.014	96	96	83.9	0.19	0.49		107.63	166.59	164.00	58.63	166.26	109	67	67	66		1.001	4.070	439
416	66.770	67.473		0.16	0.16	1.33	1.08	0.23	79	79	66	1.92	1.4	69	0.012	104	103	84.0	-0.15	0.53		107.21	166.34	163.72	58.80	166.02	106	67	67	66		1.001	4.387	471
417	66.931	67.636		0.16	0.16	1.33	1.07	0.23	79	79	66	1.93	1.4	69	0.012	104	104	84.0	-0.01	0.53		106.99	166.16	163.59	58.93	165.92	105	67	67	66		1.001	4.395	471
418	67.092	67.799		0.16	0.16	1.34	1.08	0.23	79	79	66	1.92	1.4	69	0.013	100	100	84.0	0.04	0.51		106.58	165.92	163.34	59.05	165.64	103	67	67	66		1.001	4.224	451
419	67.253	67.961		0.16	0.16	1.34	1.08	0.23	79	79	66	1.91	1.4	69	0.012	104	103	84.1	-0.08	0.48		106.27	165.68	163.13	59.18	165.45	102	67	67	66		1.001	3.997	425
420	67.414	68.124		0.16	0.16	1.33	1.07	0.23	79	79	66	1.93	1.4	69	0.012	104	104	84.1	0.00	0.54		105.82	165.43	162.89	59.31	165.13	102	67	67	66		1.001	4.501	477
421	67.575	68.286		0.16	0.16	1.34	1.08	0.23	79	78	66	1.91	1.4	70	0.012	104	104	84.1	0.01	0.49		105.52	165.23	162.72	59.42	164.94	101	67	67	66		1.001	4.079	431
422	67.737	68.449		0.16	0.16	1.33	1.07	0.23	79	78	66	1.92	1.4	70	0.014	97	97	84.1	-0.02	0.47		105.17	164.98	162.43	59.52	164.70	100	67	67	66		1.001	3.904	411
423	67.898	68.613		0.16	0.16	1.34	1.07	0.23	79	79	66	1.93	1.4	70	0.011	108	109	84.1	-0.02	0.51		104.86	164.75	162.25	59.62	164.48	100	67	67	66		1.001	4.217	443
424	68.059	68.775		0.16	0.16	1.33	1.07	0.23	79	78	66	1.92	1.4	70	0.013	100	100	84.0	0.10	0.53		104.56	164.61	162.11	59.70	164.26	99	67	67	66		1.001	4.383	459
425	68.220	68.937		0.16	0.16	1.33	1.07	0.23	79	78	66	1.92	1.4	71	0.013	100	100	84.1	-0.15	0.49		104.31	164.34	161.89	59.79	164.10	98	67	67	66		1.001	4.062	424
426	68.381	69.100		0.16	0.16	1.33	1.07	0.23	79	78	66	1.93	1.4	71	0.013	100	100	84.0	0.17	0.53		103.93	164.06	161.58	59.89	163.82	97	67	67	66		1.001	4.386	456
427	68.543	69.262		0.16	0.16	1.33	1.07	0.23	79	78	66	1.93	1.4	71	0.011	109	108	84.1	-0.13	0.51		103.66	163.85	161.38	60.00	163.65	97	67	67	66		1.001	4.223	438
428	68.704	69.425		0.16	0.16	1.33	1.08	0.23	79	78	66	1.92	1.4	71	0.013	100	100	84.1	0.01	0.53		103.24	163.65	161.16	60.09	163.33	97	67	67	66		1.001	4.388	454
429	68.865	69.587		0.16	0.16	1.33	1.07	0.23	79	78	67	1.93	1.4	71	0.011	108	108	84.0	0.10	0.49		103.00	163.38	160.90	60.16	163.16	96	67	67	67		1.001	4.061	419
430	69.026	69.750		0.16	0.16	1.34	1.08	0.23	79	78	67	1.92	1.4	71	0.015	93	93	84.1	-0.08	0.49		102.62	163.18	160.77	60.24	162.86	96	67	67	67		1.001	4.062	417
431	69.187	69.912		0.16	0.16	1.34	1.08	0.23	79	78	67	1.92	1.4	71	0.013	100	100	84.1	0.00	0.53		102.48	163.01	160.56	60.31	162.79	96	67	67	67		1.001	4.384	450
432	69.348	70.076		0.16	0.16	1.34	1.07	0.23	79	78	67	1.93	1.4	71	0.012	104	105	84.1	-0.01	0.53		102.11	162.80	160.33	60.35	162.47	95	67	67	67		1.001	4.381	448
433	69.509	70.238		0.16	0.16	1.34	1.07	0.23	79	78	67	1.93	1.4	71	0.012	104	104	84.1	0.01	0.53		101.91	162.55	160.08	60.40	162.31	95	67	67	67		1.001	4.381	447
434	69.670	70.400		0.16	0.16	1.34	1.07	0.23	79	78	67	1.92	1.4	71	0.014	96	96	84.0	0.07	0.51		101.65	162.37	159.83	60.44	162.10	95	67	67	67		1.001	4.223	430
435	69.831	70.562		0.16	0.16	1.34	1.07	0.23	79	78	67	1.93	1.4	71	0.013	100	100	84.1	-0.10	0.57		101.35	162.10	159.61	60.48	161.82	104	67	68	67		1.001	4.707	478
436	69.992	70.725		0.16	0.16	1.33	1.07	0.23	79	78	67	1.93	1.4	76	0.013	100	101	84.1	0.02	0.53		101.10	161.90	159.43	60.51	161.61	130	68	68	67		1.001	4.375	443
437	70.153	70.887		0.16	0.16	1.33	1.07	0.23	79	78	67	1.94	1.4	78	0.013	100	100	83.8	0.27	0.51		100.80	161.63	159.16	60.52	161.32	147	68	68	67		1.001	4.260	430
438	70.314	71.049		0.16	0.16	1.33	1.07	0.23	79	78	67	1.92	1.4	78	0.012	105	104	83.7	0.06	0.53		100.70	161.48	159.04	60.53	161.22	157	68	68	67		1.001	4.375	441
439	70.475	71.211		0.16	0.16	1.33	1.07	0.23	79	78	67	1.92	1.4	80	0.011	109	109	83.7	0.02	0.47		100.37	161.24	158.85	60.54	160.91	166	68	68	67		1.001	3.891	391
440	70.636	71.373		0.16	0.16	1.33	1.07	0.23	79	79	67	1.94	1.4	80	0.012	105	104	83.5	0.23	0.51		100.14	161.12	158.73	60.56	160.70	175	68	69	67		1.001	4.220	423
441	70.797	71.536		0.16	0.16	1.33	1.07	0.23	79	79	67	1.94	1.4	80	0.014	97	97	83.3	0.18	0.51		100.22	160.91	158.47	60.47	160.69	184	68	69	67		1.001	4.219	423
442	70.958	71.698		0.16	0.16	1.33	1.07	0.23	79	79	67	1.93	1.4	83	0.012	105	105	83.2	0.10	0.49		100.27	160.78	158.38	60.26	160.52	196	69	69	67		1.001	4.063	408
443	71.119	71.860		0.16	0.16	1.34	1.07	0.23	79	79	67	1.92	1.4	84	0.012	105	105	83.1	0.17	0.51		100.40	160.84	158.41	60.02	160.42	206	69	69	67		1.001	4.220	424
444	71.280	72.022		0.16	0.16	1.34	1.07	0.23	79	79	67	1.94	1.4	86	0.013	101	101	82.8	0.28	0.49		100.77	160.91	158.54	59.82	160.59	216	69	69	67		1.001	4.058	409
445	71.441	72.185		0.16	0.16	1.34	1.07	0.23	79	79	67	1.94	1.4	87	0.011	110	110	82.3	0.46	0.51		101.02	161.17	158.69	59.69	160.70	225	69	70	67		1.001	4.226	427
446	71.601	72.347		0.16	0.16	1.34	1.07	0.23	79	79	67	1.94	1.4	88	0.015	94	94	82.1	0.16	0.57		101.50	161.52	158.97	59.57	161.07	235	70	70	67		1.001	4.708	478
447	71.762	72.508		0.16	0.16	1.34	1.07	0.23	79	79	67	1.95	1.4	90	0.011	110	109	81.6	0.54	0.51		101.83	161.85	159.33	59.49	161.32	245	70	70	67		1.001	4.226	431
448	71.923	72.670		0.16	0.16	1.34	1.07	0.23	79	79	67	1.93	1.4	91	0.011	110	110	81.4	0.23	0.51		102.34	162.34	159.79	59.46	161.80	253	70	71	67		1.001	4.227	433
449	72.083	72.832		0.16	0.16	1.34	1.07	0.23	79	79	67	1.95	1.4	92	0.011	110	110	80.9	0.46	0.53		102.88	162.81	160.27	59.42	162.30	261	70	71	67		1.001	4.383	451
450	72.244	72.993		0.16	0.16	1.34	1.06	0.23	80	79	67	1.95	1.4	93	0.012	106	105	80.6	0.32	0.49		103.43	163.48	160.86	59.39	162.82	271	71	71	67		1.001	4.059	420
451	72.405	73.155		0.16	0.16	1.34	1.07	0.23	79	79	67	1.96	1.4	94	0.013	102	102	80.1	0.49	0.53		104.07	164.21	161.58	59.37	163.44	280	71	71	67		1.001	4.386	457
452	72.566	73.316		0.16	0.16	1.33	1.07	0.23	80	79	67	1.95	1.4	95	0.012	106	105	80.0	0.11	0.49		104.88	164.88	162.25	59.35	164.23	288	71	72	67		1.001	4.066	427
453	72.726	73.478		0.16	0.16	1.33	1.07	0.23	80	79	67	1.94	1.4	96	0.012	105	106	79.3	0.63	0.49		105.60	165.63	162.93	59.33	164.93	296	71	72	67		1.001	4.068	430
454	72.887	73.639		0.16	0.16	1.33	1.07	0.23	80	79	66	1.96	1.4	97	0.011	111	110	78.9	0.44	0.54		106.51	166.59	163.89	59.30	165.81	302	71	72	66		1.001	4.535	484
455	73.047	73.800		0.16	0.16	1.33	1.07	0.23	80	79	66	1.96	1.4	98	0.014	98	98	78.5	0.36	0.51		107.36	167.27	164.60	59.26	166.63	307	72	72	66		1.001	4.231	455
456	73.207	73.962		0.16	0.16	1.33	1.07	0.23	80	79	67	1.95	1.4	99	0.013	102	102	78.0	0.48	0.53		108.23	168.16	165.45	59.22	167.45	311	72	72	67		1.001	4.384	475
457	73.368	74.123		0.16	0.16	1.32	1.07	0.23	80	79	66	1.94	1.4	100	0.011	111	110	77.6	0.48	0.53		109.09	169.07	166.24	59.16	168.25	316	72	73	66		1.001	4.390	480
458	73.528	74.284		0.16	0.16	1.32	1.06	0.23	80	79	66	1.94	1.4	101	0.012	106	106	77.3	0.26	0.47		110.04	169.90	167.07	59.07	169.11	322	72	73	66		1.001	3.906	430
459	73.688	74.445		0.16	0.16	1.32	1.06	0.23	80	79	66	1.94	1.4	101	0.013	102	102	76.8	0.55	0.51		111.08	170.74	167.90	58.97	170.05	327	73	73	66		1.001	4.233	471
460	73.848	74.607		0.16	0.16	1.33	1.07	0.23	80	79	66	1.95	1.5	102	0.012	106	107	76.3	0.44	0.49		112.02	171.54	168.66	58.89	170.91	331	73	73	66		1.001	4.065	456
461	74.008	74.768		0.16	0.16	1.33	1.06	0.23	80	79	66	1.96	1.4	103	0.012	106	106	75.8	0.48	0.53		113.07	172.53	169.64	58.80	171.87	334	73	74	66		1.001	4.394	497
462	74.168	74.928		0.16	0.16	1.33	1.06	0.23	80	79	66	1.96	1.5	104	0.009	123	122	75.2	0.66	0.51		113.89	173.39	170.41	58.72	172.62	337	73	74	66		1.001	4.233	483
463	74.328	75.090		0.16	0.16	1.33	1.06	0.23	80	79	66	1.95	1.5	104	0.013	102	103	74.9	0.27	0.53		114.91	174.39	171.34	58.62	173.52	339	73	74	66		1.001	4.388	505
464	74.488	75.251		0.16	0.16	1.33	1.06	0.23	80	79	66	1.96	1.5	105	0.012	106	106	74.5	0.45	0.51		116.11	175.47	172.42	58.51	174.62	341	73	74	66		1.001	4.229	492
465	74.649	75.411		0.16	0.16	1.34	1.06	0.23	80	79	66	1.96	1.5	105	0.012	107	106	74.0	0.44	0.51		117.20	176.48	173.50	58.42	175.62	343	73	74	66		1.001	4.234	497
466	74.809	75.572		0.16	0.16	1.33	1.06	0.23	80	79	66	1.97	1.5	105	0.012	106	106	73.6	0.45	0.51		118.27	177.40	174.28	58.32	176.59	345	74	74	66		1.001	4.222	500
467	74.969	75.734		0.16	0.16	1.33	1.05	0.23	80	79	66	1.97	1.5	106	0.010	117	117	73.0	0.61	0.51		119.08	178.21	175.15	58.23	177.31	347	74	74	66		1.001	4.224	504
468	75.129	75.894		0.16	0.16	1.33	1.05	0.23	80	79	66	1.97	1.5	106	0.010	117	116	72.6	0.33	0.53		120.26	179.37	176.20	58.16	178.42	349	74	75	66		1.001	4.386	528
469	75.290	76.054		0.16	0.16	1.33	1.05	0.23	79	79	66	1.96	1.5	107	0.011	112	110	72.2	0.46	0.53		121.27	180.30	177.15	58.11	179.38	351	74	75	66		1.001	4.395	534
470	75.450	76.216		0.16	0.16	1.32	1.05	0.23	79	79	66	1.97	1.5	107	0.010	117	117	71.8	0.35	0.53		122.40	181.46	178.29	58.07	180.47	352	74	75	66		1.001	4.395	539
471	75.610	76.376		0.16	0.16	1.32	1.05	0.23	80	79	66	1.97	1.5	107	0.012	106	106	71.2	0.62	0.49		123.58	182.42	179.21	58.06	181.64	353	74	75	66		1.001	4.066	503
472	75.770	76.536		0.16	0.16	1.33	1.06	0.23	79	79	66	1.94	1.5	97	0.011	110	109	70.9	0.29	0.51		124.44	183.41	180.17	58.08	182.52	327	73	74	66		1.001	4.228	527
473	75.931	76.697		0.16	0.16	1.33	1.06	0.23	80	79	66	1.95	1.5	86	0.014	97	97	70.8	0.16	0.49		125.29	184.11	180.96	58.09	183.38	301	73	74	66		1.001	4.062	510
474	76.091	76.859		0.16	0.16	1.32	1.06	0.23	80	79	66	1.95	1.4	82	0.013	100	101	70.5	0.22	0.54		125.81	184.57	181.39	58.11	183.92	286	72	73	66		1.001	4.498	567
475	76.252	77.019		0.16	0.16	1.33	1.06	0.23	79	79	66	1.96	1.4	78	0.010	115	113	70.5	0.04	0.51		126.09	184.88	181.73	58.09	184.18	274	71	72	66		1.001	4.219	533

Elapsed Time	Particulate Sampling Data																	Fuel Weight, lb		Flow, gpm		Temperature Data, oF													
	Gas Meter Cubic Feet (1)	Gas Meter Cubic Feet (2)	Gas Meter Cubic Feet (amb)	Sample Rate, cfm (1)	Sample Rate, cfm (2)	Orifice dH (1)	Orifice dH (2)	Orifice dH (amb)	Meter oF (1)	Meter oF (2)	Meter oF (amb)	Meter Vac. In. Hg. (1)	Meter Vac. In. Hg. (2)	Dilution Tunnel Temp.	Dilution Tunnel dP	Pro. Rate (%) (1)	Pro. Rate (%) (2)	Scale Reading	Weight Change	Load Side Liquid Flow Rate	Boiler Side Liquid Flow Rate (optional)	Thermopile ΔT	Boiler to Heat Exch. Temp.	Heat Exch to Boiler Temp.	Inlet Load Temp.	Outlet Load Temp.	Stack	Filter (1)	Filter (2)	Ambient		Specific Heat of Inlet Water (BTU/lb-°F)	Mass Flow Rate of Inlet Water (lb/min)	Heat Output, Btu
476	76.412	77.181		0.16	0.16	1.32	1.06	0.23	79	79	66	1.94	1.4	77	0.011	108	109	70.3	0.20	0.49		126.34	185.04	181.87	58.09	184.43	263	71	72	66		1.001	4.071	515
477	76.573	77.343		0.16	0.16	1.33	1.07	0.23	79	79	66	1.94	1.4	76	0.014	97	96	70.3	0.03	0.51		126.53	185.27	182.05	58.07	184.60	254	71	72	66		1.001	4.229	536
478	76.733	77.504		0.16	0.16	1.33	1.06	0.23	79	79	65	1.95	1.4	76	0.011	108	108	70.1	0.12	0.47		126.86	185.30	182.14	58.04	184.90	246	70	71	65		1.001	3.904	496
479	76.893	77.665		0.16	0.16	1.33	1.07	0.23	79	79	66	1.94	1.4	75	0.012	104	103	70.2	-0.04	0.51		126.78	185.20	182.03	58.02	184.81	239	70	71	66		1.001	4.223	536
480	77.054	77.827		0.16	0.16	1.33	1.07	0.23	79	79	65	1.95	1.4	74	0.011	109	109	70.1	0.11	0.51		126.96	185.27	182.09	57.97	184.93	233	70	71	65		1.001	4.221	536
481	77.215	77.990		0.16	0.16	1.33	1.06	0.23	79	79	66	1.94	1.4	74	0.011	109	109	70.0	0.05	0.51		126.90	185.25	182.03	57.93	184.83	227	70	71	66		1.001	4.225	537
482	77.375	78.151		0.16	0.16	1.34	1.07	0.23	79	78	65	1.94	1.4	74	0.012	103	103	69.9	0.15	0.51		126.96	185.30	182.02	57.87	184.83	222	69	71	65		1.001	4.227	537
483	77.536	78.313		0.16	0.16	1.33	1.07	0.23	79	78	65	1.95	1.4	73	0.011	109	109	69.9	-0.06	0.51		126.75	185.11	181.90	57.85	184.60	217	69	70	65		1.001	4.225	536
484	77.697	78.475		0.16	0.16	1.34	1.07	0.23	79	78	66	1.94	1.4	73	0.013	100	100	69.9	0.01	0.53		126.75	185.11	181.83	57.80	184.55	214	69	70	66		1.001	4.387	557
485	77.857	78.638		0.16	0.16	1.34	1.07	0.23	79	78	65	1.93	1.4	71	0.010	113	114	69.9	0.07	0.53		126.66	184.94	181.71	57.79	184.45	211	69	70	65		1.001	4.387	556
486	78.018	78.800		0.16	0.16	1.33	1.07	0.23	79	78	65	1.93	1.4	71	0.012	104	104	69.9	0.00	0.51		126.50	184.80	181.58	57.78	184.29	208	69	69	65		1.001	4.228	535
487	78.179	78.962		0.16	0.16	1.34	1.07	0.23	79	78	65	1.94	1.4	71	0.012	104	104	69.9	-0.09	0.53		126.37	184.73	181.55	57.78	184.16	203	68	69	65		1.001	4.394	556
488	78.340	79.124		0.16	0.16	1.33	1.07	0.23	79	78	65	1.94	1.4	70	0.011	108	108	69.9	0.03	0.47		126.48	184.55	181.44	57.82	184.30	199	68	69	65		1.001	3.897	493
489	78.501	79.286		0.16	0.16	1.34	1.07	0.23	79	78	65	1.93	1.4	70	0.011	108	108	69.8	0.09	0.51		126.25	184.50	181.40	57.85	184.11	195	68	69	65		1.001	4.220	533
490	78.661	79.449		0.16	0.16	1.34	1.07	0.23	79	78	65	1.94	1.4	70	0.013	99	100	69.8	-0.01	0.53		126.01	184.33	181.21	57.90	183.91	191	68	69	65		1.001	4.379	552
491	78.822	79.610		0.16	0.16	1.33	1.07	0.23	79	78	65	1.94	1.4	70	0.012	104	103	69.8	0.06	0.53		125.76	184.13	181.01	57.93	183.69	188	68	69	65		1.001	4.392	553
492	78.983	79.772		0.16	0.16	1.33	1.07	0.23	79	78	65	1.93	1.4	70	0.013	100	100	69.9	-0.08	0.53		125.53	183.93	180.82	57.98	183.51	185	68	68	65		1.001	4.398	553
493	79.144	79.935		0.16	0.16	1.33	1.07	0.23	79	78	65	1.93	1.4	70	0.012	104	104	70.0	-0.10	0.53		125.33	183.90	180.80	58.04	183.37	181	68	68	65		1.001	4.397	552
494	79.305	80.098		0.16	0.16	1.33	1.07	0.23	79	78	65	1.94	1.4	70	0.013	100	100	69.8	0.16	0.49		125.35	183.81	180.70	58.08	183.43	177	68	68	65		1.001	4.063	510
495	79.466	80.259		0.16	0.16	1.33	1.07	0.23	79	78	65	1.93	1.4	70	0.013	100	99	69.8	-0.05	0.53		125.04	183.64	180.55	58.10	183.13	174	67	68	65		1.001	4.386	549
496	79.627	80.421		0.16	0.16	1.33	1.07	0.23	79	78	65	1.95	1.4	70	0.011	108	108	69.7	0.11	0.53		124.93	183.37	180.27	58.08	183.00	171	67	68	65		1.001	4.394	550
497	79.788	80.584		0.16	0.16	1.33	1.07	0.23	79	78	65	1.93	1.4	70	0.012	104	104	69.9	-0.13	0.53		124.59	183.07	180.00	58.06	182.65	169	67	68	65		1.001	4.398	549
498	79.949	80.747		0.16	0.16	1.34	1.07	0.23	79	78	65	1.93	1.4	70	0.012	104	104	70.0	-0.11	0.53		124.39	183.01	179.90	58.07	182.46	166	67	68	65		1.001	4.393	547
499	80.110	80.909		0.16	0.16	1.33	1.07	0.23	79	78	65	1.94	1.4	69	0.013	100	100	69.9	0.08	0.49		124.18	182.73	179.63	58.12	182.30	163	67	67	65		1.001	4.067	506
500	80.271	81.070		0.16	0.16	1.33	1.07	0.23	79	78	65	1.94	1.4	69	0.012	104	103	69.9	-0.03	0.51		123.98	182.67	179.53	58.21	182.19	160	67	67	65		1.001	4.230	525
501	80.431	81.233		0.16	0.16	1.33	1.07	0.23	79	78	65	1.94	1.4	69	0.012	103	104	69.9	0.04	0.51		123.76	182.49	179.36	58.33	182.09	157	67	67	65		1.001	4.233	525
502	80.592	81.396		0.16	0.16	1.33	1.07	0.23	79	78	65	1.94	1.4	69	0.011	108	109	70.0	-0.08	0.53		123.47	182.33	179.22	58.45	181.92	155	67	67	65		1.001	4.390	543
503	80.753	81.558		0.16	0.16	1.33	1.07	0.23	79	78	65	1.94	1.4	69	0.011	108	108	69.9	0.05	0.51		123.12	182.21	179.17	58.57	181.69	153	67	67	65		1.001	4.231	522
504	80.914	81.719		0.16	0.16	1.33	1.07	0.23	79	78	65	1.94	1.4	69	0.013	100	99	69.9	0.01	0.51		122.97	182.00	178.95	58.69	181.66	151	67	67	65		1.001	4.227	520
505	81.075	81.882		0.16	0.16	1.33	1.07	0.23	79	78	65	1.94	1.4	69	0.014	96	96	69.9	-0.04	0.53		122.61	181.76	178.75	58.81	181.42	149	67	67	65		1.001	4.383	538
506	81.235	82.044		0.16	0.16	1.33	1.07	0.23	79	78	65	1.94	1.4	69	0.012	103	104	69.8	0.09	0.49		122.29	181.66	178.63	58.93	181.22	147	67	67	65		1.001	4.070	498
507	81.396	82.206		0.16	0.16	1.33	1.07	0.23	79	78	66	1.95	1.4	70	0.014	96	96	69.9	-0.02	0.53		122.09	181.51	178.50	59.05	181.14	145	67	67	66		1.001	4.388	536
508	81.557	82.368		0.16	0.16	1.34	1.07	0.23	79	78	66	1.95	1.4	70	0.012	104	104	69.8	0.01	0.53		121.87	181.35	178.33	59.18	181.05	143	67	67	66		1.001	4.383	535
509	81.717	82.530		0.16	0.16	1.33	1.07	0.23	79	78	66	1.94	1.4	70	0.013	99	100	70.1	-0.22	0.55		121.38	181.09	178.11	59.30	180.69	141	67	67	66		1.001	4.554	553
510	81.878	82.692		0.16	0.16	1.33	1.07	0.23	79	78	66	1.93	1.4	70	0.012	104	104	70.0	0.07	0.51		121.07	180.85	177.84	59.44	180.51	139	67	67	66		1.001	4.233	513
511	82.039	82.855		0.16	0.16	1.33	1.07	0.23	79	78	66	1.95	1.4	70	0.012	104	104	69.9	0.11	0.51		120.73	180.78	177.75	59.57	180.30	137	67	67	66		1.001	4.225	511
512	82.200	83.016		0.16	0.16	1.33	1.07	0.23	79	78	66	1.93	1.4	70	0.012	104	103	70.0	-0.08	0.51		120.60	180.55	177.58	59.71	180.31	135	67	67	66		1.001	4.215	509
513	82.360	83.178		0.16	0.16	1.33	1.07	0.23	79	78	66	1.93	1.4	70	0.011	108	108	69.8	0.14	0.53		120.13	180.41	177.35	59.85	179.98	134	67	67	66		1.001	4.383	527
514	82.521	83.340		0.16	0.16	1.33	1.07	0.23	79	78	66	1.94	1.4	73	0.014	96	96	69.9	-0.04	0.55		119.83	180.16	177.19	59.97	179.81	159	67	67	66		1.001	4.548	546
515	82.681	83.503		0.16	0.16	1.33	1.06	0.23	79	78	66	1.94	1.4	81	0.014	96	98	69.5	0.35	0.53		119.36	179.76	176.83	60.09	179.45	181	68	68	66		1.001	4.386	524
516	82.841	83.663		0.16	0.16	1.34	1.07	0.23	79	78	66	1.93	1.4	74	0.013	99	99	69.4	0.10	0.55		118.88	179.39	176.46	60.18	179.06	166	67	68	66		1.001	4.544	541
517	83.002	83.825		0.16	0.16	1.34	1.07	0.23	79	78	66	1.94	1.4	71	0.012	104	104	69.5	-0.09	0.53		118.65	179.41	176.51	60.26	178.90	155	67	67	66		1.001	4.383	521
518	83.163	83.988		0.16	0.16	1.34	1.07	0.23	79	78	66	1.94	1.4	71	0.014	96	97	69.6	-0.08	0.53		118.65	179.33	176.47	60.31	178.96	148	67	67	66		1.001	4.383	521
519	83.324	84.150		0.16	0.16	1.34	1.07	0.23	79	78	66	1.93	1.4	71	0.013	100	100	69.7	-0.09	0.53		118.40	179.10	176.24	60.35	178.76	143	67	67	66		1.001	4.387	520
520	83.484	84.312		0.16	0.16	1.34	1.06	0.23	79	78	66	1.93	1.4	71	0.014	96	96	69.6	0.13	0.51		118.09	178.95	176.07	60.38	178.47	139	67	67	66		1.001	4.223	499
521	83.645	84.474		0.16	0.16	1.34	1.07	0.23	79	78	66	1.94	1.4	71	0.011	108	108	69.5	0.02	0.55		117.97	178.71	175.81	60.39	178.37	137	67	67	66		1.001	4.548	537
522	83.806	84.636		0.16	0.16	1.34	1.07	0.23	79	78	66	1.93	1.4	71	0.012	104	104	69.5	0.05	0.51		117.75	178.47	175.57	60.38	178.13	134	67	67	66		1.001	4.221	498
523	83.967	84.799		0.16	0.16	1.34	1.07	0.23	79	78	66	1.93	1.4	71	0.012	104	104	69.5	-0.04	0.53		117.47	178.31	175.42	60.36	177.83	132	67	67	66		1.001	4.385	516
524	84.128	84.961		0.16	0.16	1.34	1.07	0.23	79	78	66	1.94	1.4	71	0.011	108	108	69.5	0.09	0.53		117.43	178.09	175.22	60.35	177.78	130	67	67	66		1.001	4.390	516
525	84.289	85.122		0.16	0.16	1.34	1.07	0.23	79	78	66	1.94	1.4	71	0.012	104	103	69.6	-0.12	0.51		117.21	177.84	174.93	60.33	177.54	129	67	67	66		1.001	4.214	495
526	84.450	85.285		0.16	0.16	1.34	1.07	0.23	79	78	66	1.94	1.4	71	0.012	104	104	69.4	0.14	0.49		116.94	177.63	174.71	60.32	177.26	127	67	67	66		1.001	4.061	475
527	84.611	85.447		0.16	0.16	1.34	1.07	0.23	79	78	66	1.93	1.4	71	0.011	108	108	69.4	0.08	0.52		116.75	177.47	174.59	60.31	177.06	125	67	68	66		1.001	4.354	509
528	84.772	85.609		0.16	0.16	1.34	1.07	0.23	79	78	66	1.94	1.4	71	0.012	104	104	69.6	-0.21	0.53		116.67	177.24	174.34	60.31	176.98	124	67	68	66		1.001	4.381	512
529	84.932	85.771		0.16	0.16	1.34	1.07	0.23	79	78	66	1.94	1.4	71	0.011	108	108	69.5	0.03	0.55		116.36	176.99	174.08	60.33	176.69	123	67	68	66		1.001	4.547	530
530	85.093	85.933		0.16	0.16	1.33	1.07	0.23	79	78	66	1.93	1.4	71	0.013	100	100	69.5	0.03	0.50		116.15	176.81	173.91	60.36	176.52	122	67	68	66		1.001	4.205	489
531	85.254	86.096		0.16	0.16	1.33	1.07	0.23	79	78	66	1.93	1.4	71	0.011	108	109	69.6	-0.06	0.53		115.85	176.59	173.65	60.40	176.25	121	67	68	66		1.001	4.385	509
532	85.415	86.258		0.16	0.16	1.33	1.06	0.23	79	78	66	1.93	1.4	71	0.012	104	104	69.6	0.01	0.55		115.65	176.37	173.50	60.45	176.10	119	67	68	66		1.001	4.543	526
533	85.576	86.419		0.16	0.16	1.33	1.07	0.23	79	78	66	1.94	1.4	71	0.014	96	95	69.5	0.08	0.51		115.34	176.20	173.33	60.49	175.83	119	67	68	66		1.001	4.222	488
534	85.736	86.581		0.16	0.16	1.33	1.07	0.23	79	78	67	1.94	1.4	71	0.013	99	100	69.5	-0.04	0.51		115.21	176.08	173.16	60.53	175.74	118	67	68	67		1.001	4.224	487
535	85.897	86.744		0.16	0.16	1.33	1.07	0.23	79	78	67	1.94	1.4	71	0.013	100	100	69.4	0.10	0.55		114.77	175.79	172.92	60.58	175.35	117	67	68	67		1.001	4.542	522
536	86.058	86.906		0.16	0.16	1.33	1.07	0.23	79	78	67	1.94	1.4	71	0.013	100	100	69.5	-0.07	0.53		114.73	175.62	172.77	60.63	175.36	116	68	68	67		1.001	4.382	503

Elapsed Time	Particulate Sampling Data																	Fuel Weight, lb		Flow, gpm		Temperature Data, oF												
	Gas Meter Cubic Feet (1)	Gas Meter Cubic Feet (2)	Gas Meter Cubic Feet (amb)	Sample Rate, cfm (1)	Sample Rate, cfm (2)	Orifice dH (1)	Orifice dH (2)	Orifice dH (amb)	Meter oF (1)	Meter oF (2)	Meter oF (amb)	Meter Vac. In. Hg. (1)	Meter Vac. In. Hg. (2)	Dilution Tunnel Temp.	Dilution Tunnel dP	Pro. Rate (%) (1)	Pro. Rate (%) (2)	Scale Reading	Weight Change	Load Side Liquid Flow Rate	Boiler Side Liquid Flow Rate (optional)	Thermopile ΔT	Boiler to Heat Exch. Temp.	Heat Exch to Boiler Temp.	Inlet Load Temp.	Outlet Load Temp.	Stack	Filter (1)	Filter (2)	Ambient		Specific Heat of Inlet Water (BTU/lb-°F)	Mass Flow Rate of Inlet Water (lb/min)	Heat Output, Btu
537	86.218	87.067		0.16	0.16	1.33	1.07	0.23	79	78	67	1.94	1.4	71	0.011	108	108	69.5	-0.02	0.55		114.30	175.35	172.46	60.66	174.97	115	68	68	67		1.001	4.549	521
538	86.379	87.229		0.16	0.16	1.33	1.07	0.23	79	78	67	1.94	1.4	71	0.013	100	100	69.5	0.04	0.53		114.12	175.14	172.28	60.68	174.80	114	68	68	67		1.001	4.383	501
539	86.540	87.392		0.16	0.16	1.33	1.07	0.23	79	78	67	1.94	1.4	71	0.013	100	100	69.6	-0.14	0.51		113.89	174.89	172.06	60.69	174.58	113	68	68	67		1.001	4.219	481
540	86.701	87.554		0.16	0.16	1.33	1.07	0.23	79	78	67	1.93	1.4	71	0.014	96	96	69.6	-0.02	0.53		113.61	174.70	171.82	60.70	174.31	112	68	68	67		1.001	4.385	499
541	86.862	87.716		0.16	0.16	1.33	1.07	0.23	79	78	67	1.93	1.4	71	0.015	93	93	69.5	0.09	0.53		113.43	174.45	171.64	60.70	174.13	111	68	68	67		1.001	4.388	498
542	87.023	87.878		0.16	0.16	1.33	1.07	0.23	79	78	67	1.94	1.4	71	0.012	104	104	69.5	0.06	0.53		113.32	174.24	171.45	60.69	174.01	111	68	68	67		1.001	4.381	497
543	87.184	88.040		0.16	0.16	1.33	1.07	0.23	79	78	67	1.95	1.4	71	0.014	96	96	69.6	-0.08	0.51		112.97	174.05	171.24	60.68	173.65	110	68	68	67		1.001	4.220	477
544	87.345	88.202		0.16	0.16	1.34	1.07	0.23	79	78	67	1.94	1.4	71	0.013	100	100	69.5	0.05	0.51		112.85	173.77	170.99	60.66	173.51	109	68	68	67		1.001	4.220	477
545	87.505	88.364		0.16	0.16	1.33	1.06	0.23	79	78	67	1.93	1.4	71	0.012	103	104	69.5	0.04	0.53		112.63	173.58	170.84	60.64	173.27	109	68	68	67		1.001	4.384	494
546	87.666	88.525		0.16	0.16	1.33	1.06	0.23	79	78	67	1.94	1.4	77	0.015	93	93	69.4	0.05	0.49		112.33	173.33	170.58	60.62	172.94	142	68	69	67		1.001	4.059	456
547	87.826	88.687		0.16	0.16	1.33	1.07	0.23	79	78	67	1.95	1.4	77	0.013	100	100	69.4	0.04	0.53		112.11	172.96	170.25	60.62	172.73	146	68	68	67		1.001	4.383	492
548	87.987	88.850		0.16	0.16	1.33	1.07	0.23	79	78	67	1.94	1.4	72	0.011	109	109	69.3	0.05	0.49		111.82	172.78	170.03	60.64	172.46	134	68	68	67		1.001	4.056	454
549	88.148	89.011		0.16	0.16	1.34	1.07	0.23	79	78	67	1.95	1.4	72	0.012	104	103	69.2	0.09	0.53		111.54	172.48	169.74	60.65	172.19	127	68	68	67		1.001	4.378	489
550	88.308	89.173		0.16	0.16	1.34	1.07	0.23	79	78	67	1.95	1.4	72	0.012	103	104	69.4	-0.13	0.51		111.36	172.41	169.63	60.68	172.04	122	68	68	67		1.001	4.221	471
551	88.469	89.335		0.16	0.16	1.34	1.07	0.23	79	78	67	1.94	1.4	72	0.013	100	100	69.3	0.05	0.53		111.13	172.08	169.33	60.73	171.86	118	68	68	67		1.001	4.377	487
552	88.630	89.498		0.16	0.16	1.33	1.07	0.23	79	79	67	1.94	1.4	72	0.014	96	97	69.3	0.00	0.55		110.77	171.91	169.17	60.78	171.55	115	68	68	67		1.001	4.543	504
553	88.791	89.659		0.16	0.16	1.33	1.07	0.23	79	79	67	1.94	1.4	72	0.012	104	103	69.3	-0.01	0.53		110.49	171.66	168.90	60.84	171.32	114	68	68	67		1.001	4.381	485
554	88.952	89.821		0.16	0.16	1.34	1.07	0.23	79	79	67	1.94	1.4	72	0.012	104	104	69.3	0.05	0.55		110.22	171.55	168.82	60.89	171.11	112	68	68	67		1.001	4.542	501
555	89.113	89.983		0.16	0.16	1.33	1.07	0.23	79	79	67	1.94	1.4	72	0.011	109	108	69.2	0.12	0.51		109.99	171.22	168.51	60.94	170.93	111	68	68	67		1.001	4.223	465
556	89.274	90.146		0.16	0.16	1.33	1.07	0.23	79	79	67	1.94	1.4	72	0.012	104	104	69.1	0.03	0.53		109.75	171.07	168.37	60.99	170.74	110	68	68	67		1.001	4.385	482
557	89.435	90.307		0.16	0.16	1.33	1.06	0.23	79	79	67	1.94	1.4	72	0.010	114	113	69.2	-0.10	0.51		109.54	170.88	168.20	61.03	170.56	110	68	68	67		1.001	4.220	463
558	89.595	90.469		0.16	0.16	1.33	1.07	0.23	79	79	67	1.95	1.4	72	0.010	113	114	69.2	-0.03	0.51		109.25	170.56	167.85	61.05	170.30	108	68	68	67		1.001	4.220	462
559	89.756	90.631		0.16	0.16	1.33	1.07	0.23	79	79	67	1.94	1.4	72	0.011	109	108	69.2	0.02	0.49		109.03	170.36	167.70	61.08	170.10	108	68	68	67		1.001	4.057	443
560	89.917	90.794		0.16	0.16	1.33	1.07	0.23	79	79	67	1.94	1.4	72	0.011	109	109	69.3	-0.05	0.51		108.77	170.21	167.54	61.08	169.85	108	68	68	67		1.001	4.216	459
561	90.077	90.956		0.16	0.16	1.33	1.07	0.23	79	79	67	1.93	1.4	72	0.011	108	108	69.2	0.04	0.54		108.49	169.95	167.27	61.08	169.57	106	68	68	67		1.001	4.536	493
562	90.238	91.118		0.16	0.16	1.33	1.07	0.23	79	79	67	1.94	1.4	72	0.012	104	104	69.2	0.04	0.53		108.33	169.66	167.00	61.06	169.39	106	68	68	67		1.001	4.374	474
563	90.399	91.279		0.16	0.16	1.33	1.07	0.23	79	79	67	1.93	1.4	72	0.011	109	108	69.2	-0.02	0.52		108.07	169.47	166.83	61.04	169.11	105	68	68	67		1.001	4.358	472
564	90.560	91.442		0.16	0.16	1.33	1.07	0.23	79	79	67	1.94	1.4	72	0.014	96	97	69.2	-0.02	0.49		107.96	169.23	166.59	61.00	168.96	105	68	68	67		1.001	4.120	445
565	90.720	91.604		0.16	0.16	1.33	1.07	0.23	79	79	67	1.93	1.4	72	0.013	99	100	69.4	-0.14	0.50		107.81	169.06	166.39	60.97	168.77	105	68	68	67		1.001	4.148	448
566	90.881	91.766		0.16	0.16	1.33	1.07	0.23	80	79	67	1.94	1.4	72	0.012	104	104	69.3	0.09	0.52		107.57	168.79	166.14	60.93	168.50	103	68	69	67		1.001	4.320	465
567	91.042	91.928		0.16	0.16	1.33	1.07	0.23	80	79	67	1.94	1.4	72	0.014	96	96	69.2	0.08	0.49		107.36	168.58	165.96	60.88	168.24	103	68	69	67		1.001	4.059	436
568	91.203	92.091		0.16	0.16	1.34	1.07	0.23	80	79	67	1.94	1.4	72	0.014	96	97	69.3	-0.06	0.51		107.26	168.32	165.71	60.85	168.11	103	68	69	67		1.001	4.218	453
569	91.364	92.253		0.16	0.16	1.33	1.06	0.23	80	79	68	1.93	1.4	72	0.012	104	104	69.2	0.04	0.51		106.99	168.15	165.54	60.85	167.84	102	68	69	68		1.001	4.216	452
570	91.524	92.414		0.16	0.16	1.33	1.07	0.23	80	79	67	1.94	1.4	72	0.014	95	95	69.3	-0.01	0.49		106.77	167.96	165.35	60.86	167.62	101	68	69	67		1.001	4.058	434
571	91.685	92.576		0.16	0.16	1.33	1.07	0.23	80	79	67	1.93	1.4	72	0.013	100	100	69.2	0.06	0.53		106.62	167.74	165.14	60.86	167.49	100	68	69	67		1.001	4.380	468
572	91.846	92.739		0.16	0.16	1.34	1.07	0.23	80	79	67	1.94	1.4	72	0.011	108	109	69.3	-0.08	0.56		106.36	167.45	164.86	60.87	167.24	101	68	69	67		1.001	4.705	501
573	92.006	92.901		0.16	0.16	1.34	1.07	0.23	80	79	68	1.94	1.4	72	0.012	103	104	69.3	-0.03	0.47		106.10	167.30	164.72	60.90	167.00	99	68	69	68		1.001	3.899	414
574	92.167	93.063		0.16	0.16	1.33	1.07	0.23	80	79	67	1.93	1.4	72	0.012	104	104	69.2	0.10	0.51		105.87	167.01	164.48	60.92	166.79	100	68	69	67		1.001	4.216	447
575	92.328	93.225		0.16	0.16	1.34	1.07	0.23	80	79	68	1.95	1.4	72	0.014	96	96	69.3	-0.15	0.53		105.53	166.83	164.26	60.97	166.50	100	68	69	68		1.001	4.378	463
576	92.489	93.387		0.16	0.16	1.34	1.07	0.23	80	79	68	1.93	1.4	72	0.013	100	100	69.3	0.03	0.47		105.27	166.59	164.05	61.03	166.29	99	68	69	68		1.001	3.892	410
577	92.650	93.550		0.16	0.16	1.33	1.07	0.23	80	79	68	1.93	1.4	72	0.012	104	104	69.2	0.08	0.53		105.04	166.41	163.81	61.07	166.12	133	68	69	68		1.001	4.381	461
578	92.811	93.711		0.16	0.16	1.33	1.06	0.23	80	79	68	1.94	1.4	77	0.013	100	99	69.2	0.01	0.55		104.75	166.15	163.55	61.12	165.87	134	69	69	68		1.001	4.545	477
579	92.971	93.873		0.16	0.16	1.34	1.07	0.23	80	79	67	1.94	1.4	74	0.014	96	96	69.1	0.14	0.53		104.40	165.87	163.24	61.17	165.57	128	69	69	67		1.001	4.374	457
580	93.132	94.035		0.16	0.16	1.34	1.07	0.23	80	79	68	1.94	1.4	73	0.012	104	104	69.1	-0.03	0.51		104.17	165.69	163.13	61.22	165.39	120	69	69	68		1.001	4.219	440
581	93.293	94.198		0.16	0.16	1.34	1.07	0.23	80	79	68	1.94	1.4	72	0.015	93	93	69.0	0.12	0.51		103.85	165.40	162.82	61.26	165.11	115	69	69	68		1.001	4.215	438
582	93.454	94.360		0.16	0.16	1.34	1.06	0.23	80	79	68	1.93	1.4	72	0.011	108	108	69.1	-0.07	0.49		103.71	165.28	162.70	61.29	165.00	111	69	69	68		1.001	4.057	421
583	93.615	94.521		0.16	0.16	1.34	1.07	0.23	80	79	68	1.95	1.4	72	0.014	96	95	69.2	-0.16	0.49		103.50	165.06	162.52	61.30	164.81	108	69	69	68		1.001	4.118	427
584	93.776	94.683		0.16	0.16	1.33	1.07	0.23	80	79	68	1.95	1.4	72	0.014	96	96	69.1	0.06	0.51		103.28	164.84	162.27	61.30	164.57	107	69	69	68		1.001	4.222	437
585	93.937	94.847		0.16	0.16	1.33	1.07	0.23	80	79	68	1.93	1.4	72	0.012	104	105	69.1	0.01	0.49		103.08	164.58	162.06	61.28	164.36	105	69	69	68		1.001	4.057	419
586	94.098	95.008		0.16	0.16	1.33	1.07	0.23	80	79	68	1.94	1.4	72	0.011	108	108	69.1	-0.01	0.53		102.96	164.40	161.88	61.24	164.20	103	69	69	68		1.001	4.374	451
587	94.259	95.170		0.16	0.16	1.33	1.07	0.23	80	79	68	1.94	1.4	72	0.011	108	108	69.1	0.06	0.49		102.71	164.15	161.65	61.21	163.92	103	69	69	68		1.001	4.056	417
588	94.420	95.332		0.16	0.16	1.33	1.07	0.23	80	79	68	1.93	1.4	72	0.012	104	104	69.2	-0.07	0.49		102.60	163.92	161.43	61.15	163.75	101	69	69	68		1.001	4.055	417
589	94.581	95.495		0.16	0.16	1.33	1.07	0.23	80	79	68	1.95	1.4	72	0.012	104	104	69.2	-0.06	0.51		102.29	163.68	161.17	61.09	163.39	101	69	69	68		1.001	4.218	432
590	94.742	95.657		0.16	0.16	1.33	1.07	0.23	80	79	68	1.94	1.4	72	0.014	96	96	69.2	0.02	0.49		102.13	163.46	161.01	61.06	163.19	100	69	69	68		1.001	4.055	415
591	94.902	95.819		0.16	0.16	1.33	1.07	0.23	80	79	68	1.94	1.4	72	0.012	103	104	69.0	0.17	0.49		101.90	163.25	160.76	61.02	162.91	100	69	69	68		1.001	4.058	414
592	95.063	95.981		0.16	0.16	1.33	1.07	0.23	80	79	68	1.93	1.4	72	0.013	100	100	69.2	-0.15	0.51		101.67	162.94	160.48	60.99	162.66	99	69	69	68		1.001	4.213	429
593	95.224	96.143		0.16	0.16	1.34	1.07	0.23	80	79	68	1.94	1.4	72	0.012	104	104	69.0	0.13	0.51		101.54	162.80	160.33	60.97	162.51	98	69	69	68		1.001	4.213	428
594	95.385	96.305		0.16	0.16	1.33	1.07	0.23	80	79	68	1.93	1.4	72	0.013	100	100	69.1	0.00	0.51		101.43	162.60	160.12	60.95	162.39	97	69	69	68		1.001	4.216	428
595	95.546	96.467		0.16	0.16	1.33	1.07	0.23	80	79	69	1.94	1.4	74	0.013	100	100	69.1	-0.04	0.53		101.14	162.37	159.89	60.95	162.09	97	69	69	69		1.001	4.376	443
596	95.707	96.629		0.16	0.16	1.33	1.07	0.23	80	79	68	1.94	1.4	73	0.012	104	104	69.2	-0.08	0.51		100.93	162.18	159.70	60.97	161.90	97	69	69	68		1.001	4.217	426
597	95.868	96.792		0.16	0.16	1.33	1.07	0.23	80	79	68	1.94	1.4	74	0.011	109	109	69.0	0.21	0.51		100.74	161.94	159.47	60.98	161.72	123	69	69	68		1.001	4.220	426

Elapsed Time	Particulate Sampling Data																	Fuel Weight, lb		Flow, gpm		Temperature Data, oF												
	Gas Meter Cubic Feet (1)	Gas Meter Cubic Feet (2)	Gas Meter Cubic Feet (amb)	Sample Rate, cfm (1)	Sample Rate, cfm (2)	Orifice dH (1)	Orifice dH (2)	Orifice dH (amb)	Meter oF (1)	Meter oF (2)	Meter oF (amb)	Meter Vac. In. Hg. (1)	Meter Vac. In. Hg. (2)	Dilution Tunnel Temp.	Dilution Tunnel dP	Pro. Rate (%) (1)	Pro. Rate (%) (2)	Scale Reading	Weight Change	Load Side Liquid Flow Rate	Boiler Side Liquid Flow Rate (optional)	Thermopile ΔT	Boiler to Heat Exch. Temp.	Heat Exch to Boiler Temp.	Inlet Load Temp.	Outlet Load Temp.	Stack	Filter (1)	Filter (2)	Ambient		Specific Heat of Inlet Water (BTU/lb-°F)	Mass Flow Rate of Inlet Water (lb/min)	Heat Output, Btu
598	96.028	96.954		0.16	0.16	1.33	1.06	0.23	80	79	68	1.94	1.4	77	0.015	93	93	69.1	-0.09	0.53		100.52	161.71	159.24	60.92	161.45	141	69	69	68		1.001	4.389	442
599	96.189	97.115		0.16	0.16	1.33	1.07	0.23	80	79	68	1.95	1.4	78	0.012	104	104	69.0	0.06	0.51		100.45	161.49	159.03	60.75	161.20	149	69	69	68		1.001	4.209	423
600	96.350	97.277		0.16	0.16	1.33	1.07	0.23	80	79	68	1.93	1.4	77	0.012	104	104	69.0	-0.04	0.53		100.38	161.23	158.77	60.58	160.96	153	69	69	68		1.001	4.380	440
601	96.511	97.439		0.16	0.16	1.33	1.07	0.23	80	79	68	1.95	1.4	78	0.013	100	100	68.9	0.11	0.53		100.38	161.02	158.57	60.41	160.79	155	69	69	68		1.001	4.382	440
602	96.672	97.601		0.16	0.16	1.33	1.06	0.23	80	79	68	1.93	1.4	77	0.014	97	96	68.9	0.05	0.53		100.26	160.81	158.35	60.26	160.52	157	69	70	68		1.001	4.384	440
603	96.833	97.763		0.16	0.16	1.33	1.07	0.23	80	79	68	1.94	1.4	78	0.015	93	93	68.9	0.00	0.47		100.23	160.61	158.20	60.14	160.36	158	69	70	68		1.001	3.899	391
604	96.993	97.925		0.16	0.16	1.33	1.07	0.23	80	80	67	1.93	1.4	78	0.012	104	104	68.8	0.02	0.47		100.12	160.42	157.94	60.00	160.13	159	69	70	67		1.001	3.904	391
605	97.154	98.087		0.16	0.16	1.33	1.07	0.23	80	80	67	1.94	1.4	78	0.012	104	104	68.9	0.00	0.49		100.00	160.12	157.67	59.90	159.90	159	69	70	67		1.001	4.065	407
606	97.315	98.250		0.16	0.16	1.33	1.07	0.23	80	80	67	1.95	1.4	78	0.011	109	109	68.7	0.10	0.49		99.85	159.91	157.48	59.80	159.65	160	69	70	67		1.001	4.066	407
607	97.475	98.411		0.16	0.16	1.34	1.07	0.23	80	80	67	1.93	1.4	78	0.013	100	99	68.8	-0.06	0.49		99.75	159.67	157.25	59.69	159.44	162	69	70	67		1.001	4.068	406
608	97.636	98.573		0.16	0.16	1.33	1.07	0.23	80	80	67	1.93	1.4	78	0.013	100	100	68.7	0.16	0.49		99.52	159.41	157.02	59.61	159.13	165	69	70	67		1.001	4.069	405
609	97.797	98.735		0.16	0.16	1.33	1.07	0.23	80	80	67	1.94	1.4	78	0.013	100	100	68.6	0.07	0.56		99.48	159.34	156.85	59.50	158.97	169	69	70	67		1.001	4.707	469
610	97.958	98.898		0.16	0.16	1.33	1.07	0.23	80	80	67	1.93	1.4	79	0.014	97	97	68.2	0.35	0.55		99.52	159.30	156.80	59.40	158.92	176	70	70	67		1.001	4.551	453
611	98.119	99.060		0.16	0.16	1.34	1.07	0.23	80	79	67	1.94	1.4	80	0.013	100	100	68.0	0.20	0.51		99.57	159.21	156.76	59.29	158.86	185	69	70	67		1.001	4.228	421
612	98.280	99.221		0.16	0.16	1.34	1.07	0.23	80	79	67	1.95	1.4	82	0.011	109	109	67.9	0.10	0.57		99.74	159.30	156.88	59.16	158.91	198	70	70	67		1.001	4.711	470
613	98.441	99.383		0.16	0.16	1.34	1.07	0.23	80	79	67	1.94	1.4	84	0.013	101	101	67.5	0.39	0.53		100.01	159.52	157.00	59.06	159.06	209	70	70	67		1.001	4.387	439
614	98.601	99.546		0.16	0.16	1.34	1.07	0.23	80	79	67	1.94	1.4	85	0.012	104	106	67.3	0.28	0.55		100.34	159.79	157.26	58.95	159.29	220	70	70	67		1.001	4.544	456
615	98.762	99.708		0.16	0.16	1.34	1.07	0.23	80	79	66	1.95	1.4	87	0.010	115	115	67.1	0.20	0.45		100.78	160.10	157.54	58.85	159.62	229	70	70	66		1.001	3.748	378
616	98.923	99.869		0.16	0.16	1.34	1.07	0.23	80	79	66	1.94	1.4	88	0.013	101	100	66.5	0.52	0.51		101.21	160.53	157.97	58.77	159.98	240	70	71	66		1.001	4.223	428
617	99.084	100.031		0.16	0.16	1.34	1.07	0.23	80	79	66	1.94	1.4	89	0.012	105	105	66.3	0.19	0.49		101.74	161.06	158.43	58.70	160.44	251	70	71	66		1.001	4.066	414
618	99.245	100.194		0.16	0.16	1.33	1.07	0.23	80	79	66	1.96	1.4	90	0.011	110	111	65.9	0.43	0.51		102.37	161.62	158.98	58.65	161.02	261	70	71	66		1.001	4.222	433
619	99.406	100.355		0.16	0.16	1.33	1.07	0.23	80	79	66	1.94	1.4	91	0.011	110	110	65.5	0.37	0.53		102.96	162.27	159.62	58.62	161.58	271	70	71	66		1.001	4.387	452
620	99.567	100.516		0.16	0.16	1.33	1.07	0.23	80	79	66	1.95	1.4	93	0.014	98	97	65.0	0.52	0.53		103.78	162.99	160.29	58.59	162.37	282	70	71	66		1.001	4.386	456
621	99.727	100.678		0.16	0.16	1.33	1.07	0.23	80	79	66	1.95	1.4	95	0.011	110	111	64.7	0.33	0.51		104.63	163.82	161.15	58.57	163.21	291	71	71	66		1.001	4.228	443
622	99.887	100.840		0.16	0.16	1.33	1.07	0.23	80	79	66	1.96	1.4	97	0.015	94	95	64.3	0.35	0.49		105.33	164.63	161.89	58.57	163.90	300	71	72	66		1.001	4.064	429
623	100.048	101.001		0.16	0.16	1.33	1.07	0.23	80	79	66	1.96	1.5	99	0.012	106	106	63.8	0.52	0.51		106.18	165.59	162.86	58.57	164.75	311	71	72	66		1.001	4.226	449
624	100.208	101.162		0.16	0.16	1.32	1.07	0.23	80	79	66	1.96	1.5	100	0.012	106	106	63.4	0.44	1.09		107.16	166.53	163.46	58.56	165.72	320	71	72	66		1.001	9.088	975
625	100.368	101.324		0.16	0.16	1.33	1.07	0.23	80	79	66	1.96	1.5	101	0.010	116	117	62.8	0.53	1.03		107.47	166.41	160.39	58.66	166.13	326	71	72	66		1.001	8.597	925
626	100.528	101.486		0.16	0.16	1.33	1.06	0.23	80	79	66	1.97	1.5	102	0.010	116	117	62.3	0.53	1.05		107.50	166.27	160.16	58.46	165.96	330	72	73	66		1.001	8.764	943
627	100.689	101.646		0.16	0.16	1.33	1.07	0.23	80	79	66	1.96	1.5	102	0.013	102	101	61.9	0.39	1.05		108.00	166.59	160.34	58.19	166.19	333	72	73	66		1.001	8.761	947
628	100.849	101.807		0.16	0.16	1.33	1.07	0.23	80	79	66	1.97	1.5	103	0.013	102	102	61.4	0.55	1.07		109.13	167.49	161.34	58.03	167.16	336	72	73	66		1.001	8.925	975
629	101.009	101.969		0.16	0.16	1.33	1.06	0.23	80	79	66	1.98	1.5	104	0.011	111	112	60.9	0.41	1.03		109.76	168.05	161.92	57.98	167.75	338	73	73	66		1.001	8.593	944
630	101.168	102.129		0.16	0.16	1.33	1.06	0.23	80	79	66	1.98	1.5	105	0.012	106	106	60.5	0.47	1.09		110.47	168.83	162.59	58.01	168.47	340	73	74	66		1.001	9.075	1004
631	101.329	102.290		0.16	0.16	1.33	1.06	0.23	80	79	66	1.97	1.5	105	0.012	107	106	60.1	0.36	1.01		110.93	169.43	163.06	58.10	169.03	342	73	74	66		1.001	8.429	936
632	101.489	102.451		0.16	0.16	1.33	1.06	0.23	80	79	66	1.98	1.5	106	0.013	102	102	59.5	0.59	1.07		111.53	170.14	163.70	58.17	169.70	344	73	74	66		1.001	8.918	996
633	101.649	102.612		0.16	0.16	1.33	1.05	0.23	80	79	66	1.98	1.5	106	0.011	111	111	59.2	0.33	1.07		112.40	170.92	164.51	58.18	170.58	345	73	74	66		1.001	8.926	1004
634	101.809	102.772		0.16	0.16	1.33	1.05	0.23	80	79	66	1.97	1.5	106	0.013	102	101	58.6	0.58	1.03		113.00	171.66	165.07	58.17	171.16	344	74	74	66		1.001	8.597	973
635	101.970	102.932		0.16	0.16	1.33	1.06	0.23	80	79	66	1.97	1.5	107	0.011	112	110	58.2	0.43	1.03		113.82	172.38	165.80	58.11	171.93	342	74	74	66		1.001	8.572	977
636	102.130	103.093		0.16	0.16	1.32	1.05	0.23	80	79	66	1.97	1.5	107	0.012	106	106	57.9	0.24	1.05		114.67	173.20	166.45	58.05	172.71	341	74	75	66		1.001	8.761	1006
637	102.290	103.253		0.16	0.16	1.33	1.05	0.23	80	79	66	1.98	1.5	107	0.015	95	95	57.3	0.61	1.08		115.33	173.65	167.03	57.95	173.28	340	74	75	66		1.001	8.962	1035
638	102.449	103.414		0.16	0.16	1.33	1.05	0.23	80	79	67	1.98	1.5	106	0.013	102	102	57.0	0.34	1.09		115.73	173.96	167.37	57.85	173.58	339	74	75	67		1.001	9.081	1052
639	102.609	103.574		0.16	0.16	1.31	1.05	0.23	79	79	67	1.97	1.5	107	0.012	107	106	56.5	0.50	1.07		116.88	175.10	168.43	57.73	174.61	339	74	75	67		1.001	8.921	1044
640	102.769	103.734		0.16	0.16	1.32	1.05	0.23	79	79	67	1.97	1.5	107	0.012	107	106	56.1	0.38	0.64		117.81	176.31	172.05	57.73	175.54	338	74	75	67		1.001	5.353	631
641	102.928	103.894		0.16	0.16	1.32	1.05	0.23	79	79	67	1.99	1.5	107	0.012	106	106	55.6	0.49	0.70		119.17	177.45	173.14	57.67	176.83	338	74	75	67		1.001	5.836	696
642	103.088	104.055		0.16	0.16	1.32	1.05	0.23	79	79	67	1.97	1.5	107	0.013	102	102	55.2	0.35	0.72		119.91	178.24	173.90	57.69	177.60	338	74	75	67		1.001	6.004	721
643	103.248	104.214		0.16	0.16	1.32	1.05	0.23	79	79	67	1.98	1.5	108	0.011	111	110	54.8	0.47	0.68		120.56	179.06	174.70	57.82	178.38	337	74	75	67		1.001	5.674	685
644	103.407	104.374		0.16	0.16	1.32	1.05	0.23	79	79	67	1.99	1.5	108	0.012	106	106	54.4	0.36	0.70		121.60	180.08	175.71	57.93	179.53	336	74	75	67		1.001	5.839	711
645	103.567	104.535		0.16	0.16	1.33	1.04	0.23	79	79	67	1.97	1.5	107	0.012	107	106	54.0	0.44	0.70		122.22	180.70	176.32	58.02	180.23	336	75	75	67		1.001	5.836	714
646	103.726	104.694		0.16	0.16	1.32	1.04	0.23	80	79	67	1.97	1.5	107	0.013	102	101	53.7	0.26	0.66		122.88	181.46	177.08	58.06	180.94	336	75	76	67		1.001	5.509	678
647	103.886	104.854		0.16	0.16	1.33	1.04	0.23	79	79	67	1.98	1.5	97	0.011	110	109	53.3	0.44	0.70		123.60	182.39	177.90	58.09	181.68	312	74	75	67		1.001	5.840	723
648	104.047	105.015		0.16	0.16	1.32	1.05	0.23	79	79	67	1.96	1.5	87	0.014	98	97	53.1	0.18	0.68		124.38	182.85	178.55	58.11	182.48	291	73	75	67		1.001	5.673	706
649	104.207	105.175		0.16	0.16	1.31	1.05	0.23	80	79	67	1.97	1.5	83	0.012	104	103	53.0	0.12	0.68		124.53	182.97	178.63	58.10	182.63	277	73	74	67		1.001	5.677	708
650	104.367	105.335		0.16	0.16	1.32	1.05	0.23	80	79	67	1.97	1.5	80	0.014	96	96	52.7	0.27	0.66		124.63	183.11	178.85	58.13	182.75	266	73	74	67		1.001	5.514	688
651	104.528	105.496		0.16	0.16	1.32	1.06	0.23	80	79	67	1.96	1.5	79	0.013	100	100	52.7	-0.04	0.57		124.59	183.11	178.76	58.13	182.72	258	73	74	67		1.001	4.727	590
652	104.687	105.658		0.16	0.16	1.32	1.05	0.23	80	79	68	1.97	1.4	80	0.013	99	100	52.5	0.25	0.53		124.77	183.60	180.34	58.17	182.94	249	73	73	68		1.001	4.409	551
653	104.848	105.818		0.16	0.16	1.31	1.05	0.23	80	79	67	1.97	1.4	78	0.012	104	103	52.5	-0.05	0.55		125.07	183.93	180.68	58.27	183.34	242	72	73	67		1.001	4.550	570
654	105.008	105.979		0.16	0.16	1.31	1.06	0.23	80	79	67	1.97	1.4	78	0.012	104	104	52.4	0.11	0.53		125.26	184.13	180.87	58.35	183.60	235	72	73	67		1.001	4.379	549
655	105.168	106.141		0.16	0.16	1.31	1.06	0.23	80	79	67	1.97	1.4	77	0.013	100	100	52.4	0.04	0.53		125.28	184.15	180.93	58.33	183.61	229	72	73	67		1.001	4.384	550
656	105.328	106.301		0.16	0.16	1.32	1.06	0.23	80	79	68	1.95	1.4	77	0.011	108	107	52.5	-0.07	0.51		125.31	184.08	180.82	58.26	183.57	224	72	73	68		1.001	4.217	529
657	105.488	106.462		0.16	0.16	1.32	1.06	0.23	80	79	68	1.97	1.4	76	0.012	103	103	52.4	0.10	0.53		125.48	184.01	180.81	58.17	183.65	220	72	73	68		1.001	4.386	551
658	105.648	106.624		0.16	0.16	1.33	1.06	0.23	80	79	67	1.97	1.4	76	0.011	108	109	52.2	0.13	0.53		125.50	184.04	180.84	58.10	183.60	215	72	72	67		1.001	4.379	550

Elapsed Time	Particulate Sampling Data																	Fuel Weight, lb		Flow, gpm		Temperature Data, oF												
	Gas Meter Cubic Feet (1)	Gas Meter Cubic Feet (2)	Gas Meter Cubic Feet (amb)	Sample Rate, cfm (1)	Sample Rate, cfm (2)	Orifice dH (1)	Orifice dH (2)	Orifice dH (amb)	Meter oF (1)	Meter oF (2)	Meter oF (amb)	Meter Vac. In. Hg. (1)	Meter Vac. In. Hg. (2)	Dilution Tunnel Temp.	Dilution Tunnel dP	Pro. Rate (%) (1)	Pro. Rate (%) (2)	Scale Reading	Weight Change	Load Side Liquid Flow Rate	Boiler Side Liquid Flow Rate (optional)	Thermopile ΔT	Boiler to Heat Exch. Temp.	Heat Exch to Boiler Temp.	Inlet Load Temp.	Outlet Load Temp.	Stack	Filter (1)	Filter (2)	Ambient		Specific Heat of Inlet Water (BTU/lb-°F)	Mass Flow Rate of Inlet Water (lb/min)	Heat Output, Btu
659	105.808	106.785		0.16	0.16	1.33	1.06	0.23	80	79	67	1.96	1.4	74	0.013	99	99	52.3	-0.06	0.57		125.47	184.01	180.82	58.04	183.51	212	72	72	67		1.001	4.710	592
660	105.969	106.946		0.16	0.16	1.33	1.06	0.23	80	79	67	1.97	1.4	73	0.012	104	103	52.3	0.01	0.53		125.41	183.87	180.65	58.00	183.42	208	71	72	67		1.001	4.379	550
661	106.129	107.108		0.16	0.16	1.33	1.06	0.23	80	79	67	1.96	1.4	73	0.011	108	108	52.1	0.15	0.51		125.34	183.72	180.50	57.97	183.31	205	71	72	67		1.001	4.219	529
662	106.289	107.270		0.16	0.16	1.32	1.06	0.23	80	79	67	1.97	1.4	73	0.012	103	104	52.2	-0.09	0.54		125.26	183.59	180.43	57.96	183.22	201	71	71	67		1.001	4.539	569
663	106.449	107.431		0.16	0.16	1.32	1.06	0.23	80	79	67	1.97	1.4	72	0.011	108	108	52.3	-0.06	0.57		125.16	183.53	180.39	57.95	183.11	197	71	71	67		1.001	4.709	590
664	106.610	107.591		0.16	0.16	1.32	1.06	0.23	80	79	67	1.95	1.4	72	0.012	104	102	52.2	0.06	0.53		125.04	183.37	180.18	57.95	182.98	193	70	71	67		1.001	4.385	549
665	106.770	107.753		0.16	0.16	1.33	1.06	0.23	80	79	67	1.96	1.4	72	0.013	99	100	52.2	0.04	0.55		125.06	183.32	180.18	57.92	182.99	190	70	71	67		1.001	4.544	569
666	106.931	107.915		0.16	0.16	1.32	1.06	0.23	80	79	67	1.97	1.4	71	0.013	100	100	52.2	0.00	0.55		124.88	183.27	180.06	57.89	182.77	186	70	71	67		1.001	4.549	569
667	107.092	108.076		0.16	0.16	1.33	1.06	0.23	80	79	67	1.95	1.4	71	0.013	100	99	52.3	-0.09	0.52		124.79	183.09	179.97	57.87	182.66	183	70	70	67		1.001	4.370	546
668	107.252	108.237		0.16	0.16	1.32	1.06	0.23	80	79	66	1.95	1.4	71	0.011	108	108	52.2	0.07	0.54		124.64	182.87	179.69	57.82	182.46	180	70	70	66		1.001	4.511	563
669	107.412	108.399		0.16	0.16	1.33	1.06	0.23	80	79	66	1.96	1.4	71	0.012	103	104	52.2	-0.01	0.53		124.60	182.74	179.55	57.76	182.36	177	69	70	66		1.001	4.390	548
670	107.572	108.560		0.16	0.16	1.33	1.06	0.23	80	79	66	1.97	1.4	71	0.011	108	108	52.1	0.13	0.54		124.51	182.63	179.51	57.72	182.23	174	69	70	66		1.001	4.518	563
671	107.733	108.721		0.16	0.16	1.32	1.06	0.23	80	79	66	1.95	1.4	71	0.013	100	99	52.2	-0.17	0.52		124.32	182.44	179.29	57.68	182.00	171	69	70	66		1.001	4.355	542
672	107.893	108.883		0.16	0.16	1.32	1.06	0.23	80	79	66	1.95	1.4	70	0.012	103	103	52.2	0.02	0.55		124.31	182.28	179.10	57.63	181.94	168	69	69	66		1.001	4.551	566
673	108.053	109.045		0.16	0.16	1.32	1.06	0.23	80	79	66	1.96	1.4	70	0.014	95	96	52.3	-0.05	0.51		124.16	182.14	178.91	57.59	181.75	165	69	69	66		1.001	4.221	525
674	108.214	109.206		0.16	0.16	1.33	1.06	0.23	80	79	66	1.97	1.4	71	0.012	104	103	52.2	0.08	0.51		124.04	181.97	178.76	57.57	181.61	163	69	69	66		1.001	4.227	525
675	108.374	109.368		0.16	0.16	1.33	1.06	0.23	80	79	66	1.94	1.4	70	0.012	103	103	52.2	0.01	0.57		123.85	181.81	178.60	57.56	181.40	160	68	69	66		1.001	4.713	584
676	108.534	109.529		0.16	0.16	1.32	1.06	0.23	80	79	66	1.96	1.4	70	0.012	103	103	52.1	0.07	0.55		123.67	181.63	178.47	57.61	181.28	158	68	69	66		1.001	4.547	563
677	108.695	109.691		0.16	0.16	1.33	1.06	0.23	80	79	67	1.95	1.4	70	0.009	120	120	52.3	-0.20	0.55		123.37	181.44	178.22	57.71	181.08	155	68	69	67		1.001	4.551	562
678	108.855	109.853		0.16	0.16	1.33	1.05	0.23	80	79	67	1.96	1.4	70	0.013	99	99	52.3	-0.03	0.49		123.04	181.19	177.99	57.86	180.90	153	68	69	67		1.001	4.068	501
679	109.015	110.014		0.16	0.16	1.33	1.06	0.23	80	79	66	1.96	1.4	70	0.012	103	103	52.1	0.20	0.57		122.59	181.04	177.85	58.06	180.64	151	68	69	66		1.001	4.713	578
680	109.176	110.175		0.16	0.16	1.33	1.06	0.23	80	79	66	1.96	1.4	70	0.012	104	103	52.2	-0.09	0.51		122.32	181.04	177.84	58.22	180.54	149	68	68	66		1.001	4.230	518
681	109.336	110.338		0.16	0.16	1.33	1.06	0.23	79	79	66	1.95	1.4	70	0.013	99	100	52.2	0.07	0.53		122.11	180.90	177.77	58.38	180.49	147	68	68	66		1.001	4.387	536
682	109.496	110.499		0.16	0.16	1.33	1.06	0.23	79	79	67	1.96	1.4	70	0.011	108	107	52.2	0.00	0.55		121.72	180.66	177.53	58.53	180.25	145	68	68	67		1.001	4.551	555
683	109.657	110.660		0.16	0.16	1.33	1.06	0.23	79	79	67	1.95	1.4	70	0.012	104	103	52.2	-0.08	0.53		121.35	180.50	177.35	58.69	180.04	143	68	68	67		1.001	4.385	533
684	109.817	110.821		0.16	0.16	1.33	1.06	0.23	79	79	66	1.95	1.4	71	0.012	103	103	52.3	-0.05	0.50		121.08	180.32	177.21	58.82	179.90	141	68	68	66		1.001	4.185	507
685	109.978	110.983		0.16	0.16	1.33	1.06	0.23	79	79	66	1.95	1.4	71	0.012	104	104	52.3	0.04	0.51		120.76	180.09	176.93	58.94	179.71	140	68	68	66		1.001	4.289	519
686	110.139	111.144		0.16	0.16	1.32	1.06	0.23	79	79	67	1.96	1.4	71	0.011	108	108	52.3	-0.01	0.53		120.45	179.85	176.72	59.05	179.50	138	68	68	67		1.001	4.383	529
687	110.299	111.306		0.16	0.16	1.33	1.06	0.23	79	79	66	1.95	1.4	71	0.011	108	108	52.3	0.00	0.51		120.08	179.58	176.51	59.15	179.23	137	68	68	66		1.001	4.221	507
688	110.460	111.468		0.16	0.16	1.33	1.06	0.23	79	79	66	1.95	1.4	71	0.011	108	108	52.2	0.12	0.53		119.88	179.52	176.38	59.24	179.12	135	68	68	66		1.001	4.380	526
689	110.620	111.629		0.16	0.16	1.32	1.05	0.23	79	79	66	1.97	1.5	77	0.014	96	96	52.1	0.03	0.51		119.71	179.34	176.24	59.33	179.04	158	68	69	66		1.001	4.220	506
690	110.780	111.789		0.16	0.16	1.31	1.05	0.23	79	79	67	1.97	1.5	82	0.013	100	99	51.9	0.26	0.54		119.22	178.97	175.90	59.43	178.65	178	69	70	67		1.001	4.541	542
691	110.941	111.950		0.16	0.16	1.32	1.06	0.23	79	79	67	1.96	1.4	75	0.013	100	99	51.9	-0.03	0.53		118.75	178.76	175.65	59.54	178.29	163	68	68	67		1.001	4.377	520
692	111.101	112.113		0.16	0.16	1.32	1.06	0.23	79	79	67	1.96	1.4	72	0.012	103	104	51.8	0.08	0.51		118.44	178.49	175.38	59.65	178.09	152	68	68	67		1.001	4.211	499
693	111.261	112.274		0.16	0.16	1.32	1.06	0.23	79	79	67	1.95	1.4	72	0.013	99	99	51.9	-0.03	0.51		118.32	178.42	175.39	59.74	178.06	146	68	68	67		1.001	4.213	499
694	111.421	112.435		0.16	0.16	1.33	1.07	0.23	79	79	67	1.96	1.4	72	0.012	103	103	51.8	0.03	0.51		117.95	178.16	175.00	59.89	177.84	141	68	68	67		1.001	4.216	498
695	111.582	112.597		0.16	0.16	1.33	1.07	0.23	79	79	67	1.96	1.4	72	0.012	104	104	51.8	0.01	0.54		117.52	178.03	174.73	60.06	177.58	138	68	69	67		1.001	4.536	534
696	111.743	112.759		0.16	0.16	1.33	1.07	0.23	79	79	67	1.95	1.4	72	0.013	100	100	51.9	-0.11	0.53		117.42	177.87	174.70	60.12	177.54	136	68	69	67		1.001	4.379	515
697	111.903	112.921		0.16	0.16	1.33	1.06	0.23	79	79	67	1.96	1.4	72	0.012	103	104	51.7	0.16	0.51		117.08	177.63	174.51	60.23	177.31	134	68	68	67		1.001	4.216	494
698	112.064	113.082		0.16	0.16	1.33	1.06	0.23	79	79	67	1.95	1.4	72	0.012	104	103	51.7	0.06	0.53		116.74	177.45	174.26	60.38	177.12	132	68	68	67		1.001	4.376	511
699	112.224	113.244		0.16	0.16	1.33	1.07	0.23	79	79	67	1.95	1.4	72	0.012	103	104	51.9	-0.17	0.56		116.32	177.20	173.91	60.58	176.90	130	68	69	67		1.001	4.693	547
700	112.385	113.406		0.16	0.16	1.33	1.06	0.23	79	79	67	1.96	1.4	72	0.014	96	96	51.8	0.03	0.53		115.96	177.02	173.66	60.71	176.67	128	68	69	67		1.001	4.376	508
701	112.545	113.567		0.16	0.16	1.33	1.07	0.23	79	79	69	1.95	1.4	74	0.012	103	103	51.9	-0.12	0.51		115.52	176.76	173.33	60.84	176.35	127	68	69	69		1.001	4.216	488
702	112.706	113.729		0.16	0.16	1.33	1.07	0.23	79	79	68	1.95	1.4	73	0.013	100	100	51.8	0.19	0.56		115.25	176.62	173.18	60.98	176.24	126	68	69	68		1.001	4.703	543
703	112.866	113.891		0.16	0.16	1.33	1.07	0.23	79	79	68	1.95	1.4	72	0.014	96	96	51.8	-0.03	0.51		114.93	176.35	172.70	61.06	175.99	125	68	69	68		1.001	4.278	492
704	113.027	114.053		0.16	0.16	1.33	1.06	0.23	79	79	68	1.95	1.4	72	0.012	104	104	51.8	-0.02	0.54		114.80	176.14	172.37	60.96	175.76	124	68	69	68		1.001	4.490	516
705	113.187	114.214		0.16	0.16	1.34	1.06	0.23	79	79	67	1.94	1.4	72	0.012	103	103	51.7	0.07	0.53		114.71	175.93	172.02	60.83	175.55	122	68	69	67		1.001	4.377	503
706	113.348	114.375		0.16	0.16	1.33	1.06	0.23	79	79	68	1.94	1.4	72	0.014	96	95	51.7	0.00	0.51		114.75	175.76	171.72	60.67	175.42	121	68	69	68		1.001	4.220	485
707	113.509	114.537		0.16	0.16	1.33	1.07	0.23	80	79	68	1.95	1.4	71	0.014	96	96	51.9	-0.15	0.51		114.62	175.56	171.42	60.52	175.14	120	68	69	68		1.001	4.221	484
708	113.670	114.699		0.16	0.16	1.33	1.07	0.23	80	79	68	1.96	1.4	71	0.012	104	104	51.7	0.17	0.45		114.54	175.38	171.10	60.37	174.90	119	68	69	68		1.001	3.742	429
709	113.830	114.860		0.16	0.16	1.33	1.06	0.23	80	79	68	1.96	1.4	71	0.013	99	99	51.9	-0.16	0.47		114.53	175.12	170.71	60.13	174.65	119	68	69	68		1.001	3.901	447
710	113.991	115.022		0.16	0.16	1.33	1.06	0.23	80	79	67	1.96	1.4	71	0.012	104	104	51.8	0.05	0.54		114.28	174.83	170.24	60.10	174.38	118	68	69	67		1.001	4.540	519
711	114.151	115.184		0.16	0.16	1.33	1.07	0.23	80	79	67	1.95	1.4	71	0.014	95	96	51.8	0.00	0.53		113.99	174.69	170.01	60.15	174.14	117	68	69	67		1.001	4.389	501
712	114.312	115.346		0.16	0.16	1.32	1.06	0.23	80	79	67	1.95	1.4	70	0.011	108	108	51.9	-0.05	0.55		113.75	174.43	169.66	60.12	173.87	117	68	69	67		1.001	4.551	518
713	114.473	115.507		0.16	0.16	1.32	1.07	0.23	80	79	67	1.95	1.4	70	0.013	99	99	51.8	0.06	0.53		113.34	174.18	169.34	60.27	173.61	115	68	68	67		1.001	4.390	498
714	114.633	115.669		0.16	0.16	1.33	1.07	0.23	80	79	67	1.96	1.4	70	0.013	99	99	51.9	-0.06	0.51		113.08	174.00	169.12	60.31	173.39	115	68	68	67		1.001	4.215	477
715	114.793	115.831		0.16	0.16	1.33	1.07	0.23	80	79	67	1.95	1.4	70	0.009	119	120	52.0	-0.09	0.53		112.89	173.72	168.77	60.29	173.18	114	68	68	67		1.001	4.387	496
716	114.954	115.992		0.16	0.16	1.33	1.06	0.23	80	79	67	1.96	1.4	70	0.012	104	103	51.8	0.15	0.55		112.40	173.46	168.39	60.36	172.77	113	68	68	67		1.001	4.544	511
717	115.114	116.154		0.16	0.16	1.33	1.07	0.23	80	79	67	1.95	1.4	70	0.013	99	99	51.9	-0.14	0.51		111.96	173.23	168.10	60.49	172.45	114	68	68	67		1.001	4.230	474
718	115.275	116.316		0.16	0.16	1.33	1.06	0.23	80	79	66	1.94	1.4	70	0.011	108	108	51.8	0.16	0.53		111.24	173.07	167.86	61.00	172.24	112	68	68	66		1.001	4.387	489
719	115.436	116.478		0.16	0.16	1.33	1.07	0.23	80	79	67	1.94	1.4	70	0.013	99	99	52.0	-0.18	0.54		110.52	172.88	167.70	61.51	172.03	112	68	68	67		1.001	4.477	495

Elapsed Time	Particulate Sampling Data																	Fuel Weight, lb		Flow, gpm		Temperature Data, oF												
	Gas Meter Cubic Feet (1)	Gas Meter Cubic Feet (2)	Gas Meter Cubic Feet (amb)	Sample Rate, cfm (1)	Sample Rate, cfm (2)	Orifice dH (1)	Orifice dH (2)	Orifice dH (amb)	Meter oF (1)	Meter oF (2)	Meter oF (amb)	Meter Vac. In. Hg. (1)	Meter Vac. In. Hg. (2)	Dilution Tunnel Temp.	Dilution Tunnel dP	Pro. Rate (%) (1)	Pro. Rate (%) (2)	Scale Reading	Weight Change	Load Side Liquid Flow Rate	Boiler Side Liquid Flow Rate (optional)	Thermopile ΔT	Boiler to Heat Exch. Temp.	Heat Exch to Boiler Temp.	Inlet Load Temp.	Outlet Load Temp.	Stack	Filter (1)	Filter (2)	Ambient		Specific Heat of Inlet Water (BTU/lb-°F)	Mass Flow Rate of Inlet Water (lb/min)	Heat Output, Btu
720	115.596	116.640		0.16	0.16	1.32	1.06	0.23	80	79	67	1.95	1.4	70	0.012	103	103	51.7	0.26	0.55		110.40	172.66	167.54	61.41	171.81	111	68	68	67		1.001	4.545	502
721	115.757	116.801		0.16	0.16	1.32	1.06	0.23	80	79	67	1.97	1.4	75	0.012	104	103	51.7	0.00	0.51		109.85	172.36	167.23	61.69	171.54	139	69	69	67		1.001	4.228	465
722	115.917	116.962		0.16	0.16	1.33	1.06	0.23	80	79	67	1.96	1.4	75	0.013	99	99	51.8	-0.07	0.55		109.40	172.13	166.98	61.89	171.29	143	68	68	67		1.001	4.549	498
723	116.077	117.124		0.16	0.16	1.33	1.07	0.23	80	79	66	1.94	1.4	70	0.010	113	113	51.8	0.00	0.53		109.39	171.78	166.74	61.65	171.04	132	68	68	66		1.001	4.392	481
724	116.238	117.285		0.16	0.16	1.33	1.06	0.23	80	79	66	1.96	1.4	69	0.012	103	103	51.6	0.16	0.53		109.82	171.56	166.66	61.04	170.86	125	68	68	66		1.001	4.391	483
725	116.399	117.447		0.16	0.16	1.33	1.06	0.23	80	79	66	1.94	1.4	69	0.013	99	99	51.5	0.09	0.51		110.41	171.39	166.48	60.18	170.59	120	68	68	66		1.001	4.221	467
726	116.559	117.609		0.16	0.16	1.34	1.07	0.23	80	79	66	1.94	1.4	69	0.012	103	103	51.7	-0.19	0.53		110.74	171.25	166.43	59.82	170.56	117	68	68	66		1.001	4.384	486
727	116.720	117.771		0.16	0.16	1.34	1.07	0.23	80	79	66	1.94	1.4	69	0.013	99	99	51.5	0.24	0.51		110.86	171.06	166.22	59.55	170.41	114	68	68	66		1.001	4.231	470
728	116.881	117.933		0.16	0.16	1.33	1.07	0.23	80	79	66	1.95	1.4	69	0.011	108	108	51.8	-0.29	0.49		110.57	170.72	165.80	59.48	170.05	113	67	68	66		1.001	4.071	451
729	117.041	118.095		0.16	0.16	1.33	1.07	0.23	80	79	66	1.96	1.4	69	0.012	103	103	51.7	0.12	0.49		110.19	170.46	165.50	59.53	169.72	111	67	68	66		1.001	4.071	449
730	117.202	118.256		0.16	0.16	1.34	1.07	0.23	80	79	66	1.96	1.4	69	0.013	99	99	51.8	-0.10	0.51		109.45	170.23	165.25	59.95	169.40	110	67	67	66		1.001	4.228	463
731	117.363	118.419		0.16	0.16	1.33	1.07	0.23	80	79	66	1.96	1.4	69	0.011	108	109	51.6	0.15	0.53		108.67	170.03	165.06	60.53	169.20	110	67	67	66		1.001	4.386	477
732	117.524	118.580		0.16	0.16	1.33	1.07	0.23	80	79	66	1.95	1.4	69	0.010	113	113	51.8	-0.21	0.53		108.71	169.88	164.94	60.35	169.06	108	67	67	66		1.001	4.387	477
733	117.685	118.742		0.16	0.16	1.32	1.07	0.23	80	79	66	1.94	1.4	69	0.014	96	96	51.7	0.10	0.55		108.97	169.61	164.69	59.84	168.80	108	67	67	66		1.001	4.550	496
734	117.846	118.904		0.16	0.16	1.33	1.07	0.23	79	79	66	1.94	1.4	69	0.013	100	99	51.8	-0.04	0.47		108.96	169.36	164.35	59.66	168.62	107	67	67	66		1.001	3.900	425
735	118.006	119.067		0.16	0.16	1.33	1.07	0.23	80	79	66	1.94	1.4	69	0.012	103	104	51.6	0.18	0.53		108.57	169.14	164.19	59.71	168.28	107	67	67	66		1.001	4.419	480
736	118.167	119.228		0.16	0.16	1.33	1.07	0.23	79	79	66	1.96	1.4	69	0.013	100	99	51.6	-0.02	0.53		108.38	168.84	163.97	59.69	168.07	105	67	67	66		1.001	4.424	480
737	118.328	119.390		0.16	0.16	1.33	1.07	0.23	79	79	66	1.96	1.4	69	0.012	104	103	51.6	-0.04	0.53		108.33	168.65	163.76	59.47	167.80	104	67	67	66		1.001	4.380	475
738	118.488	119.552		0.16	0.16	1.33	1.07	0.23	79	79	66	1.95	1.4	68	0.012	103	103	51.6	0.07	0.53		107.94	168.41	163.46	59.66	167.60	103	67	67	66		1.001	4.391	475
739	118.649	119.715		0.16	0.16	1.33	1.07	0.23	79	79	66	1.95	1.4	68	0.012	104	104	51.6	-0.02	0.55		107.59	168.19	163.25	59.76	167.35	103	67	67	66		1.001	4.548	490
740	118.810	119.876		0.16	0.16	1.33	1.06	0.23	79	79	66	1.95	1.4	68	0.011	108	107	51.6	-0.06	0.53		107.34	167.97	163.04	59.81	167.15	103	67	67	66		1.001	4.385	471
741	118.970	120.038		0.16	0.16	1.33	1.07	0.23	79	79	66	1.94	1.4	68	0.011	107	108	51.7	-0.08	0.51		107.07	167.71	162.83	59.79	166.86	102	67	67	66		1.001	4.222	453
742	119.131	120.200		0.16	0.16	1.33	1.07	0.23	79	79	66	1.94	1.4	68	0.010	113	113	51.7	0.07	0.57		106.85	167.55	162.67	59.83	166.68	102	67	67	66		1.001	4.710	504
743	119.292	120.363		0.16	0.16	1.33	1.07	0.23	79	78	65	1.95	1.4	68	0.011	108	109	51.9	-0.21	0.51		106.55	167.26	162.40	59.85	166.40	101	67	67	65		1.001	4.233	452
744	119.452	120.524		0.16	0.16	1.33	1.07	0.23	79	78	65	1.95	1.4	68	0.010	113	113	51.7	0.21	0.57		106.56	166.99	162.16	59.67	166.23	101	66	67	65		1.001	4.716	503
745	119.613	120.686		0.16	0.16	1.33	1.07	0.23	79	78	65	1.94	1.4	68	0.014	96	96	51.8	-0.10	0.53		106.56	166.75	161.98	59.48	166.04	99	66	67	65		1.001	4.388	468
746	119.774	120.848		0.16	0.16	1.33	1.07	0.23	79	78	65	1.94	1.4	68	0.011	108	108	51.7	0.07	0.53		106.53	166.61	161.90	59.27	165.80	100	66	67	65		1.001	4.388	468
747	119.935	121.011		0.16	0.16	1.34	1.07	0.23	79	78	65	1.95	1.4	68	0.013	99	100	51.6	0.04	0.57		106.27	166.28	161.48	59.26	165.52	99	66	67	65		1.001	4.710	501
748	120.095	121.173		0.16	0.16	1.33	1.07	0.23	79	78	65	1.95	1.4	68	0.013	99	99	51.7	-0.04	0.53		106.12	166.14	161.37	59.20	165.32	99	66	66	65		1.001	4.385	466
749	120.256	121.334		0.16	0.16	1.34	1.07	0.23	79	78	65	1.95	1.4	68	0.011	108	107	51.5	0.16	0.53		105.91	165.83	161.09	59.20	165.11	99	66	66	65		1.001	4.387	465
750	120.417	121.496		0.16	0.16	1.34	1.07	0.23	79	78	65	1.94	1.4	68	0.012	104	103	51.7	-0.16	0.51		105.73	165.57	160.81	59.12	164.85	98	66	66	65		1.001	4.229	448
751	120.577	121.659		0.16	0.16	1.34	1.07	0.23	79	78	66	1.95	1.4	68	0.012	103	104	51.7	-0.07	0.55		105.43	165.47	160.78	59.26	164.69	97	66	66	66		1.001	4.541	479
752	120.738	121.821		0.16	0.16	1.34	1.07	0.23	79	78	65	1.96	1.4	68	0.011	108	108	51.7	0.06	0.53		105.20	165.27	160.55	59.25	164.45	132	66	66	65		1.001	4.394	463
753	120.899	121.982		0.16	0.16	1.34	1.06	0.23	79	78	65	1.95	1.4	73	0.013	100	99	51.6	0.11	0.53		104.83	164.93	160.21	59.30	164.13	131	67	67	65		1.001	4.397	462
754	121.059	122.144		0.16	0.16	1.34	1.07	0.23	79	78	65	1.94	1.4	70	0.013	99	100	51.6	-0.01	0.51		104.72	164.74	160.00	59.26	163.98	125	66	66	65		1.001	4.228	443
755	121.220	122.306		0.16	0.16	1.34	1.07	0.23	79	78	65	1.95	1.4	68	0.012	104	103	51.6	0.00	0.49		104.43	164.46	159.77	59.33	163.76	118	66	66	65		1.001	4.050	423
756	121.381	122.468		0.16	0.16	1.34	1.07	0.23	79	78	65	1.95	1.4	68	0.015	93	93	51.7	-0.09	0.53		104.22	164.24	159.58	59.28	163.50	113	66	66	65		1.001	4.390	458
757	121.542	122.630		0.16	0.16	1.34	1.07	0.23	79	78	65	1.94	1.4	68	0.014	96	96	51.6	0.03	0.53		104.07	164.03	159.38	59.19	163.26	109	66	66	65		1.001	4.394	458
758	121.703	122.792		0.16	0.16	1.34	1.07	0.23	79	78	65	1.96	1.4	69	0.014	96	96	51.6	0.06	0.53		103.97	163.78	159.20	59.15	163.12	107	66	66	65		1.001	4.393	457
759	121.864	122.954		0.16	0.16	1.34	1.07	0.23	79	78	65	1.95	1.4	68	0.012	104	103	51.7	-0.10	0.53		103.66	163.55	158.92	59.18	162.84	105	66	66	65		1.001	4.393	456
760	122.025	123.117		0.16	0.16	1.34	1.07	0.23	79	78	65	1.95	1.4	68	0.013	99	100	51.6	0.07	0.53		103.27	163.26	158.71	59.34	162.61	103	66	66	65		1.001	4.398	455
761	122.186	123.278		0.16	0.16	1.33	1.07	0.23	79	78	65	1.95	1.4	68	0.014	96	95	51.6	-0.02	0.49		103.01	163.08	158.46	59.30	162.31	101	66	66	65		1.001	4.065	419
762	122.346	123.440		0.16	0.16	1.33	1.07	0.23	79	78	65	1.94	1.4	68	0.013	99	99	51.7	-0.08	0.55		102.20	162.87	158.23	59.84	162.04	101	66	66	65		1.001	4.551	466
763	122.507	123.602		0.16	0.16	1.33	1.07	0.23	79	78	65	1.94	1.4	68	0.012	104	103	51.7	0.05	0.55		101.85	162.65	158.03	60.11	161.95	100	66	66	65		1.001	4.554	464
764	122.668	123.765		0.16	0.16	1.34	1.07	0.23	79	78	65	1.95	1.4	68	0.014	96	96	51.6	0.08	0.55		101.46	162.43	157.92	60.31	161.76	99	66	66	65		1.001	4.550	462
765	122.828	123.926		0.16	0.16	1.33	1.07	0.23	79	78	65	1.96	1.4	68	0.011	107	107	51.7	-0.11	0.51		101.39	162.19	157.67	60.11	161.51	121	66	66	65		1.001	4.232	430
766	122.989	124.088		0.16	0.16	1.33	1.07	0.23	79	78	65	1.96	1.4	74	0.013	100	100	51.5	0.16	0.51		101.07	161.96	157.48	60.23	161.30	136	66	67	65		1.001	4.233	428
767	123.149	124.250		0.16	0.16	1.33	1.07	0.23	79	78	65	1.96	1.4	75	0.011	108	109	51.5	0.00	0.53		100.71	161.73	157.19	60.29	161.00	147	66	67	65		1.001	4.391	443
768	123.310	124.412		0.16	0.16	1.33	1.06	0.23	79	78	65	1.94	1.4	75	0.014	97	96	51.5	-0.02	0.51		100.24	161.50	156.96	60.47	160.71	152	66	67	65		1.001	4.224	424
769	123.470	124.573		0.16	0.16	1.33	1.06	0.23	79	78	65	1.94	1.4	75	0.013	100	99	51.4	0.11	0.54		99.93	161.28	156.73	60.71	160.64	155	66	67	65		1.001	4.518	452
770	123.631	124.735		0.16	0.16	1.33	1.07	0.23	79	78	66	1.96	1.4	76	0.013	100	100	51.5	-0.07	0.52		99.62	161.08	156.52	60.77	160.39	157	67	67	66		1.001	4.296	429
771	123.791	124.897		0.16	0.16	1.33	1.07	0.23	79	78	66	1.94	1.4	76	0.011	108	109	51.4	0.14	0.51		99.26	160.89	156.35	60.83	160.09	158	67	67	66		1.001	4.225	420
772	123.952	125.059		0.16	0.16	1.33	1.06	0.23	79	78	66	1.95	1.4	77	0.014	97	97	51.4	0.01	0.55		99.14	160.64	156.13	60.81	159.95	160	67	67	66		1.001	4.546	451
773	124.112	125.220		0.16	0.16	1.33	1.07	0.23	79	78	66	1.95	1.4	77	0.013	100	100	51.3	0.07	0.51		98.96	160.41	156.02	60.80	159.75	161	67	67	66		1.001	4.220	418
774	124.273	125.382		0.16	0.16	1.33	1.07	0.23	78	78	66	1.95	1.4	77	0.013	101	100	51.2	0.13	0.53		98.92	160.27	155.84	60.69	159.61	162	67	67	66		1.001	4.388	435
775	124.433	125.544		0.16	0.16	1.33	1.07	0.23	78	78	66	1.95	1.4	78	0.011	109	109	51.2	0.00	0.49		98.56	160.12	155.75	60.83	159.40	164	67	68	66		1.001	4.058	400
776	124.594	125.706		0.16	0.16	1.33	1.07	0.23	79	78	66	1.96	1.4	78	0.013	100	100	51.1	0.06	0.51		98.39	159.94	155.54	60.85	159.24	166	67	68	66		1.001	4.223	416
777	124.754	125.867		0.16	0.16	1.33	1.07	0.23	79	78	66	1.96	1.4	79	0.010	114	114	50.9	0.17	0.53		98.27	159.86	155.44	60.80	159.07	168	67	68	66		1.001	4.387	432
778	124.915	126.029		0.16	0.16	1.34	1.07	0.23	79	78	66	1.96	1.4	79	0.012	105	105	50.9	0.05	0.53		98.03	159.82	155.38	61.01	159.04	172	68	68	66		1.001	4.384	430
779	125.075	126.191		0.16	0.16	1.33	1.07	0.23	79	78	66	1.95	1.4	80	0.012	104	105	50.7	0.19	0.55		97.87	159.77	155.32	61.15	159.02	177	68	68	66		1.001	4.541	445
780	125.235	126.352		0.16	0.16	1.34	1.06	0.23	79	78	66	1.94	1.4	80	0.012	104	104	50.5	0.24	0.51		97.93	159.81	155.40	61.14	159.07	184	68	68	66		1.001	4.217	413

Elapsed Time	Particulate Sampling Data																	Fuel Weight, lb		Flow, gpm		Temperature Data, oF												
	Gas Meter Cubic Feet (1)	Gas Meter Cubic Feet (2)	Gas Meter Cubic Feet (amb)	Sample Rate, cfm (1)	Sample Rate, cfm (2)	Orifice dH (1)	Orifice dH (2)	Orifice dH (amb)	Meter oF (1)	Meter oF (2)	Meter oF (amb)	Meter Vac. In. Hg. (1)	Meter Vac. In. Hg. (2)	Dilution Tunnel Temp.	Dilution Tunnel dP	Pro. Rate (%) (1)	Pro. Rate (%) (2)	Scale Reading	Weight Change	Load Side Liquid Flow Rate	Boiler Side Liquid Flow Rate (optional)	Thermopile ΔT	Boiler to Heat Exch. Temp.	Heat Exch to Boiler Temp.	Inlet Load Temp.	Outlet Load Temp.	Stack	Filter (1)	Filter (2)	Ambient		Specific Heat of Inlet Water (BTU/lb-°F)	Mass Flow Rate of Inlet Water (lb/min)	Heat Output, Btu
781	125.396	126.513		0.16	0.16	1.34	1.07	0.23	79	78	66	1.95	1.4	81	0.013	101	100	50.4	0.10	0.53		97.94	159.97	155.57	61.24	159.19	191	68	68	66		1.001	4.379	429
782	125.557	126.675		0.16	0.16	1.34	1.07	0.23	79	78	66	1.95	1.4	84	0.012	105	105	50.1	0.23	0.53		98.03	160.17	155.73	61.34	159.36	200	68	69	66		1.001	4.378	430
783	125.717	126.837		0.16	0.16	1.33	1.06	0.23	79	78	66	1.96	1.4	85	0.013	100	101	49.9	0.23	0.55		98.18	160.42	155.90	61.38	159.56	208	68	69	66		1.001	4.545	447
784	125.878	126.998		0.16	0.16	1.32	1.06	0.23	79	78	66	1.96	1.4	86	0.012	105	105	49.7	0.16	0.53		98.36	160.84	156.33	61.59	159.95	214	69	69	66		1.001	4.380	431
785	126.038	127.158		0.16	0.16	1.32	1.06	0.23	79	78	66	1.95	1.4	87	0.012	105	104	49.5	0.28	0.49		98.50	161.04	156.54	61.66	160.16	223	69	69	66		1.001	4.065	401
786	126.198	127.320		0.16	0.16	1.32	1.06	0.23	79	78	66	1.97	1.4	88	0.013	101	101	49.0	0.46	0.51		98.86	161.55	157.01	61.79	160.65	237	69	70	66		1.001	4.236	419
787	126.358	127.481		0.16	0.16	1.32	1.06	0.23	79	78	66	1.97	1.5	90	0.013	101	101	48.8	0.18	0.55		99.10	162.04	157.42	61.92	161.02	251	69	70	66		1.001	4.541	451
788	126.517	127.642		0.16	0.16	1.32	1.06	0.23	79	78	66	1.96	1.5	92	0.013	100	101	48.3	0.53	0.55		99.33	162.61	157.99	62.18	161.51	266	70	70	66		1.001	4.543	452
789	126.677	127.802		0.16	0.16	1.33	1.06	0.23	79	78	66	1.97	1.5	94	0.010	115	115	47.8	0.45	0.53		99.64	163.32	158.60	62.57	162.21	280	70	71	66		1.001	4.387	438
790	126.837	127.964		0.16	0.16	1.33	1.06	0.23	79	78	66	1.97	1.5	95	0.012	106	106	47.3	0.55	0.56		100.71	164.08	159.33	62.24	162.95	292	70	71	66		1.001	4.705	474
791	126.997	128.124		0.16	0.16	1.32	1.06	0.23	79	78	66	1.99	1.5	98	0.012	106	105	46.9	0.37	0.49		101.08	164.85	160.02	62.66	163.75	307	71	72	66		1.001	4.052	410
792	127.156	128.284		0.16	0.16	1.33	1.06	0.23	79	78	67	1.97	1.5	100	0.012	105	105	46.5	0.46	0.54		101.52	165.78	160.86	63.06	164.58	320	71	72	67		1.001	4.537	461
793	127.316	128.445		0.16	0.16	1.33	1.06	0.23	79	78	67	1.98	1.5	102	0.011	111	111	45.8	0.64	0.53		101.91	166.57	161.64	63.43	165.34	330	72	73	67		1.001	4.377	447
794	127.475	128.605		0.16	0.16	1.32	1.05	0.23	79	78	67	1.99	1.5	104	0.014	98	98	45.1	0.71	0.51		102.82	167.64	162.68	63.58	166.40	339	72	73	67		1.001	4.215	434
795	127.635	128.764		0.16	0.16	1.33	1.05	0.23	79	78	66	1.98	1.5	106	0.012	107	105	44.7	0.44	0.53		103.83	168.83	163.81	63.79	167.63	348	73	74	66		1.001	4.377	455
796	127.795	128.925		0.16	0.16	1.32	1.05	0.23	79	78	67	1.98	1.5	107	0.012	107	107	44.0	0.70	0.53		104.62	169.98	164.88	64.02	168.64	354	73	74	67		1.001	4.374	458
797	127.954	129.084		0.16	0.16	1.32	1.05	0.23	79	78	67	1.98	1.5	107	0.012	106	105	43.5	0.44	0.49		105.74	171.23	165.99	64.10	169.83	357	74	74	67		1.001	4.050	429
798	128.113	129.243		0.16	0.16	1.32	1.05	0.23	79	78	67	1.99	1.5	108	0.011	111	110	43.1	0.47	0.51		107.00	172.59	167.34	64.20	171.20	360	74	75	67		1.001	4.212	451
799	128.273	129.404		0.16	0.16	1.31	1.04	0.23	79	78	67	2	1.5	109	0.013	103	103	42.5	0.60	0.49		108.03	173.95	168.65	64.49	172.52	364	74	75	67		1.001	4.053	438
800	128.431	129.563		0.16	0.16	1.32	1.04	0.23	79	78	67	1.99	1.5	110	0.012	106	106	42.0	0.49	0.51		109.53	175.22	169.86	64.15	173.68	367	75	75	67		1.001	4.216	462
801	128.591	129.722		0.16	0.16	1.32	1.05	0.23	79	78	67	2.01	1.5	110	0.012	107	106	41.3	0.68	0.47		111.52	176.51	171.23	63.61	175.13	369	75	76	67		1.001	3.925	438
802	128.749	129.883		0.16	0.16	1.32	1.04	0.23	79	78	67	1.99	1.5	111	0.011	110	112	40.7	0.59	0.48		113.58	177.58	172.43	62.75	176.34	370	76	76	67		1.001	4.029	458
803	128.909	130.041		0.16	0.16	1.32	1.04	0.23	79	78	67	2.01	1.5	111	0.011	112	110	40.3	0.39	0.50		115.36	178.99	173.66	62.32	177.68	371	76	76	67		1.001	4.143	478
804	129.068	130.200		0.16	0.16	1.32	1.04	0.23	79	78	67	1.99	1.5	111	0.013	102	101	39.8	0.51	0.51		116.84	180.33	174.91	62.15	178.99	373	76	77	67		1.001	4.254	498
805	129.227	130.360		0.16	0.16	1.31	1.04	0.23	79	78	67	2.01	1.5	112	0.012	106	106	39.2	0.64	0.52		117.89	181.71	176.15	62.30	180.19	374	76	77	67		1.001	4.367	515
806	129.388	130.519		0.16	0.16	1.34	1.06	0.23	79	78	67	2.02	1.5	112	0.013	104	102	38.7	0.46	0.51		118.80	182.89	177.33	62.68	181.48	375	77	77	67		1.001	4.214	501
807	129.549	130.680		0.16	0.16	1.33	1.06	0.23	79	78	67	2.02	1.5	97	0.013	102	101	38.4	0.27	0.55		118.76	184.07	178.22	63.86	182.63	341	76	76	67		1.001	4.541	540
808	129.709	130.842		0.16	0.16	1.33	1.06	0.23	79	78	67	2.01	1.5	88	0.014	97	98	37.8	0.61	0.51		118.12	185.06	179.16	65.41	183.52	314	75	76	67		1.001	4.219	499
809	129.870	131.003		0.16	0.16	1.34	1.06	0.23	79	78	66	2	1.5	85	0.011	110	109	37.8	0.01	0.51		118.47	185.60	179.75	65.81	184.28	297	74	75	66		1.001	4.220	501
810	130.030	131.164		0.16	0.16	1.34	1.06	0.23	79	78	66	1.99	1.5	82	0.014	97	96	37.6	0.20	0.51		119.97	186.18	180.32	64.87	184.84	284	73	74	66		1.001	4.223	507
811	130.191	131.325		0.16	0.16	1.33	1.07	0.23	79	78	67	1.99	1.5	81	0.011	109	109	37.6	0.03	0.51		120.00	186.60	180.75	65.33	185.33	273	73	73	67		1.001	4.221	507
812	130.352	131.488		0.16	0.16	1.33	1.07	0.23	79	78	67	1.99	1.5	80	0.010	115	115	37.3	0.28	0.51		120.26	187.03	181.28	65.56	185.62	263	72	73	67		1.001	4.217	508
813	130.513	131.650		0.16	0.16	1.33	1.06	0.23	79	78	67	2	1.5	79	0.011	109	109	37.4	-0.10	0.53		120.66	187.18	181.35	65.32	185.98	255	72	72	67		1.001	4.379	529
814	130.674	131.811		0.16	0.16	1.33	1.06	0.23	79	78	67	1.98	1.5	78	0.012	105	104	37.2	0.23	0.53		120.19	187.36	181.51	65.93	186.12	248	71	72	67		1.001	4.376	527
815	130.835	131.973		0.16	0.16	1.33	1.07	0.23	79	78	67	2	1.5	78	0.011	109	109	37.1	0.07	0.51		120.43	187.49	181.47	65.89	186.32	242	71	72	67		1.001	4.216	508
816	130.996	132.136		0.16	0.16	1.33	1.07	0.23	79	78	67	1.99	1.5	78	0.013	100	101	37.1	-0.01	0.53		121.20	187.38	181.35	64.95	186.15	235	71	72	67		1.001	4.373	531
817	131.157	132.298		0.16	0.16	1.34	1.07	0.23	79	79	67	1.98	1.5	77	0.012	104	104	37.1	0.07	0.60		122.09	187.32	180.82	64.10	186.19	230	71	71	67		1.001	5.028	615
818	131.318	132.460		0.16	0.16	1.33	1.07	0.23	79	79	67	1.97	1.5	77	0.011	109	109	37.0	0.05	0.62		124.05	187.17	180.77	62.11	186.16	225	71	71	67		1.001	5.186	644
819	131.480	132.623		0.16	0.16	1.34	1.07	0.23	79	79	67	1.98	1.5	76	0.011	110	109	37.0	0.02	0.63		125.07	187.02	181.19	61.34	186.41	223	71	71	67		1.001	5.212	653
820	131.641	132.786		0.16	0.16	1.33	1.08	0.23	79	79	67	1.99	1.5	75	0.010	114	115	37.0	-0.06	0.62		125.43	186.72	181.82	60.88	186.31	219	70	71	67		1.001	5.186	651
821	131.802	132.949		0.16	0.16	1.33	1.08	0.23	79	79	67	1.97	1.5	74	0.012	104	105	36.9	0.14	0.58		125.17	186.37	181.74	60.85	186.02	215	70	71	67		1.001	4.861	609
822	131.963	133.112		0.16	0.16	1.33	1.08	0.23	79	79	67	1.99	1.5	74	0.011	109	109	36.9	0.00	0.60		125.33	186.34	182.03	60.75	186.08	211	70	71	67		1.001	5.023	630
823	132.124	133.274		0.16	0.16	1.34	1.08	0.23	79	79	68	1.98	1.5	74	0.012	104	104	36.9	0.00	0.64		125.03	186.05	181.74	60.69	185.72	207	70	71	68		1.001	5.344	669
824	132.285	133.437		0.16	0.16	1.33	1.08	0.23	79	79	68	1.98	1.5	74	0.012	104	105	36.9	-0.03	0.64		124.90	185.86	181.59	60.67	185.56	203	70	71	68		1.001	5.351	669
825	132.446	133.601		0.16	0.16	1.34	1.08	0.23	79	79	67	1.98	1.5	74	0.012	104	105	37.0	-0.06	0.56		124.64	185.76	182.17	60.75	185.39	199	70	71	67		1.001	4.704	587
826	132.607	133.764		0.16	0.16	1.34	1.08	0.23	79	79	68	1.97	1.5	74	0.012	104	105	36.9	0.14	0.60		124.86	185.81	182.20	60.60	185.46	196	70	71	68		1.001	5.024	628
827	132.769	133.926		0.16	0.16	1.34	1.08	0.23	79	79	68	1.98	1.5	74	0.012	105	104	37.0	-0.09	0.60		124.81	185.67	182.07	60.51	185.32	192	70	71	68		1.001	5.025	628
828	132.930	134.089		0.16	0.16	1.34	1.08	0.23	79	79	68	1.99	1.5	74	0.014	96	97	36.8	0.14	0.56		124.67	185.43	181.84	60.45	185.13	188	70	71	68		1.001	4.700	587
829	133.091	134.252		0.16	0.16	1.34	1.08	0.23	79	79	68	1.99	1.5	74	0.013	100	100	36.9	-0.06	0.56		124.53	185.18	181.60	60.42	184.95	185	70	70	68		1.001	4.702	586
830	133.252	134.416		0.16	0.16	1.34	1.08	0.23	79	79	68	1.97	1.5	74	0.014	96	97	36.9	0.02	0.60		124.42	184.90	180.96	60.30	184.72	182	70	70	68		1.001	5.024	626
831	133.413	134.578		0.16	0.16	1.34	1.08	0.23	79	79	68	1.99	1.5	74	0.013	100	100	36.8	0.06	0.62		124.04	184.65	180.74	60.34	184.38	178	70	70	68		1.001	5.181	643
832	133.574	134.741		0.16	0.16	1.34	1.07	0.23	79	79	68	1.97	1.5	74	0.014	96	97	36.9	-0.06	0.60		123.74	184.38	180.43	60.32	184.06	175	70	70	68		1.001	5.019	622
833	133.735	134.903		0.16	0.16	1.34	1.08	0.23	79	79	68	1.99	1.5	74	0.015	93	93	36.8	0.01	0.59		123.74	184.38	180.37	60.28	184.01	173	70	70	68		1.001	4.948	613
834	133.896	135.066		0.16	0.16	1.34	1.08	0.23	79	79	68	1.98	1.5	73	0.014	96	97	36.8	0.02	0.62		123.59	184.16	180.24	60.26	183.84	170	70	70	68		1.001	5.151	637
835	134.057	135.230		0.16	0.16	1.34	1.08	0.23	79	79	68	1.97	1.5	73	0.014	96	97	36.8	-0.02	0.62		123.31	183.91	180.03	60.25	183.56	167	70	70	68		1.001	5.185	640
836	134.219	135.393		0.16	0.16	1.34	1.07	0.23	79	79	68	1.97	1.5	73	0.014	97	97	36.9	-0.04	0.60		123.07	183.60	179.74	60.24	183.31	165	70	70	68		1.001	5.020	619
837	134.380	135.555		0.16	0.16	1.34	1.08	0.23	79	79	68	1.98	1.5	73	0.014	96	96	36.9	0.02	0.56		122.95	183.46	179.63	60.24	183.19	162	70	70	68		1.001	4.697	578
838	134.541	135.718		0.16	0.16	1.34	1.08	0.23	80	79	68	1.97	1.5	73	0.015	93	93	36.8	0.07	0.60		122.77	183.26	179.44	60.22	182.99	160	70	70	68		1.001	5.017	617
839	134.702	135.881		0.16	0.16	1.34	1.08	0.23	80	79	68	1.99	1.5	73	0.015	93	93	36.9	-0.07	0.60		122.64	183.13	179.39	60.16	182.80	158	70	70	68		1.001	5.020	616
840	134.863	136.045		0.16	0.16	1.34	1.08	0.23	80	79	68	1.99	1.5	73	0.013	100	101	36.8	0.02	0.62		122.47	182.85	179.11	60.07	182.54	156	70	70	68		1.001	5.185	636
841	135.025	136.207		0.16	0.16	1.34	1.08	0.23	80	79	68	1.97	1.5	73	0.016	90	90	36.9	-0.03	0.60		122.33	182.62	178.95	60.03	182.36	153	70	70	68		1.001	5.025	615

Elapsed Time	Particulate Sampling Data																	Fuel Weight, lb		Flow, gpm		Temperature Data, oF												
	Gas Meter Cubic Feet (1)	Gas Meter Cubic Feet (2)	Gas Meter Cubic Feet (amb)	Sample Rate, cfm (1)	Sample Rate, cfm (2)	Orifice dH (1)	Orifice dH (2)	Orifice dH (amb)	Meter oF (1)	Meter oF (2)	Meter oF (amb)	Meter Vac. In. Hg. (1)	Meter Vac. In. Hg. (2)	Dilution Tunnel Temp.	Dilution Tunnel dP	Pro. Rate (%) (1)	Pro. Rate (%) (2)	Scale Reading	Weight Change	Load Side Liquid Flow Rate	Boiler Side Liquid Flow Rate (optional)	Thermopile ΔT	Boiler to Heat Exch. Temp.	Heat Exch to Boiler Temp.	Inlet Load Temp.	Outlet Load Temp.	Stack	Filter (1)	Filter (2)	Ambient		Specific Heat of Inlet Water (BTU/lb-°F)	Mass Flow Rate of Inlet Water (lb/min)	Heat Output, Btu
842	135.186	136.370		0.16	0.16	1.34	1.07	0.23	80	79	68	1.98	1.5	73	0.015	93	93	36.8	0.06	0.60		122.20	182.49	178.77	59.95	182.15	151	70	70	68		1.001	5.020	614
843	135.347	136.533		0.16	0.16	1.34	1.08	0.23	80	79	68	1.97	1.5	73	0.014	96	97	36.8	0.05	0.60		122.14	182.30	178.54	59.85	181.99	150	70	70	68		1.001	5.022	614
844	135.508	136.696		0.16	0.16	1.34	1.08	0.23	80	79	68	1.97	1.5	73	0.013	100	100	36.8	-0.06	0.64		121.91	181.95	178.21	59.81	181.72	148	70	70	68		1.001	5.338	652
845	135.669	136.859		0.16	0.16	1.34	1.08	0.23	80	79	68	1.98	1.5	73	0.014	96	97	36.8	0.04	0.58		121.63	181.63	177.86	59.74	181.37	146	70	70	68		1.001	4.857	592
846	135.830	137.022		0.16	0.16	1.34	1.08	0.23	80	79	68	1.98	1.5	73	0.014	96	97	36.8	-0.02	0.62		121.47	181.41	177.75	59.70	181.17	144	69	70	68		1.001	5.164	628
847	135.991	137.184		0.16	0.16	1.34	1.08	0.23	80	79	68	1.97	1.5	73	0.014	96	96	36.9	-0.11	0.59		121.22	181.24	177.54	59.72	180.94	143	70	70	68		1.001	4.895	594
848	136.153	137.347		0.16	0.16	1.34	1.08	0.23	80	79	68	1.99	1.5	73	0.014	97	97	36.8	0.10	0.60		120.96	180.99	177.21	59.63	180.59	141	69	70	68		1.001	4.979	603
849	136.314	137.510		0.16	0.16	1.34	1.07	0.23	80	79	68	1.99	1.5	81	0.015	94	94	36.9	-0.04	0.62		120.75	180.66	176.82	59.65	180.40	164	70	71	68		1.001	5.199	629
850	136.475	137.672		0.16	0.16	1.33	1.07	0.23	80	79	68	2.01	1.5	85	0.015	94	94	36.5	0.34	0.64		120.34	180.24	176.44	59.66	180.00	183	71	71	68		1.001	5.347	644
851	136.636	137.834		0.16	0.16	1.34	1.08	0.23	80	79	68	1.98	1.5	77	0.013	100	100	36.5	0.06	0.62		120.10	180.08	176.27	59.67	179.77	167	69	70	68		1.001	5.188	624
852	136.797	137.997		0.16	0.16	1.34	1.08	0.23	80	79	68	1.97	1.5	74	0.014	96	97	36.5	-0.06	0.62		119.99	179.88	176.06	59.59	179.59	157	70	70	68		1.001	5.188	623
853	136.958	138.160		0.16	0.16	1.34	1.08	0.23	80	79	68	1.98	1.5	73	0.013	100	100	36.5	0.03	0.60		119.95	179.71	175.89	59.48	179.43	150	70	70	68		1.001	5.029	604
854	137.120	138.324		0.16	0.16	1.34	1.08	0.23	80	79	68	1.98	1.5	73	0.014	97	97	36.4	0.13	0.60		119.91	179.43	175.69	59.21	179.13	146	70	70	68		1.001	5.022	603
855	137.281	138.487		0.16	0.16	1.33	1.08	0.23	80	79	68	1.97	1.5	72	0.014	96	97	36.4	-0.09	0.62		119.76	179.18	175.41	59.10	178.86	142	70	70	68		1.001	5.186	622
856	137.442	138.650		0.16	0.16	1.33	1.08	0.23	80	79	68	1.98	1.5	72	0.013	100	100	36.5	-0.08	0.64		119.73	178.93	175.13	58.92	178.65	140	70	70	68		1.001	5.350	641
857	137.604	138.813		0.16	0.16	1.33	1.08	0.23	80	79	68	1.97	1.5	72	0.015	93	93	36.4	0.17	0.58		119.55	178.69	174.86	58.75	178.31	137	70	70	68		1.001	4.871	583
858	137.765	138.976		0.16	0.16	1.34	1.08	0.23	80	79	68	1.98	1.5	72	0.014	96	97	36.3	0.02	0.64		119.30	178.30	174.55	58.72	178.02	136	69	70	68		1.001	5.354	639
859	137.927	139.140		0.16	0.16	1.34	1.09	0.23	80	79	68	1.96	1.5	71	0.014	97	97	36.4	-0.03	0.60		119.21	178.12	174.35	58.59	177.79	134	69	70	68		1.001	5.035	601
860	138.088	139.303		0.16	0.16	1.34	1.08	0.23	80	79	68	1.97	1.5	71	0.014	96	96	36.5	-0.09	0.62		119.01	177.76	173.97	58.47	177.48	132	69	70	68		1.001	5.191	619
861	138.249	139.466		0.16	0.16	1.35	1.09	0.23	80	80	68	1.98	1.5	71	0.014	96	96	36.6	-0.13	0.57		118.95	177.60	173.87	58.42	177.37	131	69	69	68		1.001	4.718	562
862	138.411	139.629		0.16	0.16	1.34	1.08	0.23	80	80	67	1.98	1.5	71	0.014	97	96	36.4	0.22	0.61		118.68	177.50	173.84	58.37	177.05	130	69	69	67		1.001	5.069	602
863	138.572	139.792		0.16	0.16	1.34	1.09	0.23	80	80	67	1.97	1.5	71	0.013	100	100	36.4	-0.06	0.63		118.71	177.14	173.42	58.22	176.93	129	69	69	67		1.001	5.280	628
864	138.734	139.956		0.16	0.16	1.34	1.08	0.23	80	79	67	1.97	1.5	71	0.012	104	105	36.4	0.01	0.61		118.44	176.84	173.16	58.10	176.53	127	69	69	67		1.001	5.056	599
865	138.895	140.119		0.16	0.16	1.34	1.08	0.23	80	79	67	1.97	1.5	71	0.014	96	96	36.4	-0.01	0.60		118.08	176.48	172.87	58.04	176.12	126	69	69	67		1.001	5.032	595
866	139.057	140.282		0.16	0.16	1.34	1.08	0.23	80	80	67	1.97	1.5	70	0.014	96	96	36.4	0.04	0.62		117.97	176.25	172.82	57.94	175.91	124	69	69	67		1.001	5.198	614
867	139.218	140.445		0.16	0.16	1.34	1.09	0.23	80	79	67	1.97	1.5	70	0.014	96	96	36.4	0.02	0.66		117.91	176.02	172.41	57.77	175.67	123	69	69	67		1.001	5.525	652
868	139.380	140.609		0.16	0.16	1.34	1.09	0.23	80	79	67	1.97	1.5	70	0.014	96	97	36.5	-0.13	0.58		117.66	175.72	172.13	57.73	175.39	123	69	69	67		1.001	4.868	573
869	139.541	140.772		0.16	0.16	1.35	1.09	0.23	80	80	67	1.98	1.5	70	0.013	99	100	36.5	-0.03	0.58		117.56	175.39	172.01	57.62	175.17	122	69	69	67		1.001	4.865	573
870	139.703	140.936		0.16	0.16	1.34	1.09	0.23	80	79	67	1.98	1.5	70	0.015	93	94	36.4	0.11	0.62		117.49	175.14	171.61	57.51	175.01	121	69	69	67		1.001	5.188	610
871	139.864	141.099		0.16	0.16	1.34	1.08	0.23	80	79	67	1.97	1.5	70	0.014	96	96	36.4	-0.01	0.60		117.13	174.89	171.36	57.46	174.60	120	68	69	67		1.001	5.029	590
872	140.026	141.262		0.16	0.16	1.34	1.08	0.23	80	79	67	1.97	1.5	70	0.013	100	100	36.4	-0.01	0.62		116.94	174.77	171.21	57.48	174.42	119	68	69	67		1.001	5.202	609
873	140.187	141.426		0.16	0.16	1.34	1.09	0.23	80	79	67	1.97	1.5	70	0.015	93	94	36.3	0.10	0.62		116.66	174.36	170.83	57.41	174.07	118	68	69	67		1.001	5.203	608
874	140.349	141.589		0.16	0.16	1.34	1.08	0.23	80	79	67	1.96	1.5	70	0.014	96	96	36.5	-0.12	0.62		116.37	174.12	170.51	57.45	173.82	116	68	68	67		1.001	5.202	606
875	140.510	141.753		0.16	0.16	1.34	1.09	0.23	80	79	67	1.96	1.5	70	0.015	93	94	36.4	0.11	0.64		116.15	173.90	170.30	57.45	173.60	116	68	68	67		1.001	5.362	624
876	140.672	141.916		0.16	0.16	1.34	1.08	0.23	80	79	67	1.98	1.5	69	0.014	96	96	36.5	-0.18	0.59		115.79	173.59	170.03	57.46	173.25	116	68	68	67		1.001	4.954	574
877	140.833	142.079		0.16	0.16	1.34	1.08	0.23	80	79	67	1.97	1.5	69	0.013	99	100	36.4	0.13	0.59		115.59	173.24	169.80	57.44	173.03	115	68	68	67		1.001	4.951	573
878	140.995	142.242		0.16	0.16	1.34	1.09	0.23	80	79	67	1.97	1.5	69	0.015	93	93	36.4	0.00	0.62		115.39	173.13	169.55	57.41	172.79	114	68	68	67		1.001	5.197	600
879	141.156	142.406		0.16	0.16	1.34	1.09	0.23	80	79	66	1.97	1.5	69	0.015	93	94	36.4	0.00	0.62		115.20	172.78	169.26	57.36	172.56	113	68	68	66		1.001	5.200	600
880	141.317	142.570		0.16	0.16	1.34	1.09	0.23	80	79	66	1.97	1.5	69	0.015	93	94	36.4	0.05	0.58		114.88	172.42	168.86	57.27	172.16	116	68	68	66		1.001	4.870	560
881	141.479	142.733		0.16	0.16	1.34	1.08	0.23	80	79	66	1.98	1.5	75	0.014	97	97	36.5	-0.10	0.62		114.63	172.01	168.47	57.18	171.81	145	68	69	66		1.001	5.195	596
882	141.640	142.895		0.16	0.16	1.34	1.08	0.23	80	79	66	1.98	1.5	74	0.016	90	90	36.2	0.26	0.64		114.35	171.81	168.23	57.10	171.45	146	68	68	66		1.001	5.358	613
883	141.801	143.058		0.16	0.16	1.34	1.08	0.23	80	79	66	1.98	1.5	70	0.014	96	96	36.2	0.02	0.62		114.31	171.51	168.00	56.93	171.24	133	67	68	66		1.001	5.207	596
884	141.963	143.222		0.16	0.16	1.34	1.09	0.23	80	79	66	1.97	1.5	69	0.014	96	97	36.2	-0.08	0.60		114.16	171.26	167.79	56.84	170.99	125	68	68	66		1.001	5.038	576
885	142.124	143.385		0.16	0.16	1.35	1.09	0.23	80	79	66	1.97	1.5	69	0.015	93	93	36.2	0.02	0.62		113.96	171.01	167.48	56.74	170.69	120	67	68	66		1.001	5.202	593
886	142.285	143.549		0.16	0.16	1.34	1.09	0.23	80	79	66	1.98	1.5	69	0.014	96	97	36.3	-0.11	0.62		113.82	170.71	167.23	56.62	170.44	117	67	68	66		1.001	5.205	593
887	142.447	143.713		0.16	0.16	1.34	1.08	0.23	80	79	66	1.97	1.5	69	0.016	90	91	36.2	0.14	0.62		113.68	170.48	166.93	56.57	170.24	115	67	68	66		1.001	5.198	592
888	142.608	143.876		0.16	0.16	1.34	1.08	0.23	80	79	66	1.98	1.5	69	0.014	96	96	36.2	-0.01	0.60		113.35	170.06	166.48	56.51	169.86	113	67	68	66		1.001	5.022	570
889	142.770	144.039		0.16	0.16	1.35	1.09	0.23	80	79	66	1.98	1.5	69	0.014	96	96	36.1	0.06	0.57		113.00	169.80	166.50	56.49	169.49	112	67	67	66		1.001	4.726	535
890	142.932	144.202		0.16	0.16	1.34	1.09	0.23	80	79	66	1.97	1.5	69	0.014	96	96	36.2	-0.05	0.60		112.86	169.57	166.33	56.47	169.33	111	67	67	66		1.001	5.002	565
891	143.093	144.367		0.16	0.16	1.35	1.08	0.23	80	79	66	1.97	1.5	69	0.014	96	97	36.2	-0.03	0.62		112.62	169.37	166.09	56.47	169.09	109	67	67	66		1.001	5.197	586
892	143.255	144.530		0.16	0.16	1.35	1.09	0.23	80	79	66	1.97	1.5	69	0.014	96	96	36.2	0.07	0.58		112.33	169.16	165.73	56.49	168.83	109	67	67	66		1.001	4.876	548
893	143.416	144.693		0.16	0.16	1.34	1.09	0.23	80	79	65	1.98	1.5	68	0.013	99	100	36.3	-0.18	0.58		112.08	168.84	165.60	56.51	168.59	108	67	67	65		1.001	4.875	547
894	143.578	144.857		0.16	0.16	1.34	1.09	0.23	80	79	66	1.97	1.5	68	0.014	96	97	36.3	0.08	0.58		111.82	168.54	165.32	56.49	168.30	107	67	67	66		1.001	4.870	545
895	143.739	145.020		0.16	0.16	1.35	1.09	0.23	79	79	65	1.97	1.5	68	0.013	99	100	36.2	0.06	0.60		111.47	168.25	164.80	56.47	167.94	106	67	67	65		1.001	5.036	562
896	143.901	145.184		0.16	0.16	1.35	1.09	0.23	79	79	66	1.96	1.5	68	0.015	93	94	36.0	0.17	0.60		111.19	167.89	164.44	56.43	167.61	106	67	67	66		1.001	5.035	560
897	144.063	145.348		0.16	0.16	1.35	1.09	0.23	79	79	65	1.96	1.5	68	0.014	96	97	36.2	-0.21	0.60		110.91	167.66	164.16	56.37	167.29	104	67	67	65		1.001	5.036	559
898	144.224	145.511		0.16	0.16	1.35	1.08	0.23	79	79	65	1.96	1.5	68	0.015	93	93	36.2	0.07	0.68		110.71	167.39	163.98	56.37	167.08	103	67	67	65		1.001	5.685	630
899	144.386	145.674		0.16	0.16	1.34	1.09	0.23	79	79	65	1.96	1.5	68	0.014	96	96	36.3	-0.10	0.60		110.45	167.04	163.76	56.36	166.81	103	66	67	65		1.001	5.041	557
900	144.547	145.838		0.16	0.16	1.34	1.09	0.23	79	79	65	1.97	1.5	68	0.013	99	100	36.3	-0.01	0.64		110.20	166.84	163.43	56.34	166.55	102	67	67	65		1.001	5.362	592
901	144.709	146.001		0.16	0.16	1.34	1.09	0.23	79	79	65	1.96	1.5	68	0.013	100	100	36.3	-0.05	0.62		109.94	166.55	163.07	56.33	166.27	102	66	67	65		1.001	5.198	572
902	144.870	146.166		0.16	0.16	1.35	1.09	0.23	79	79	65	1.97	1.5	68	0.014	96	97	36.3	0.06	0.57		109.68	166.28	162.81	56.36	166.04	102	66	67	65		1.001	4.710	517

Elapsed Time	Particulate Sampling Data																	Fuel Weight, lb		Flow, gpm		Temperature Data, oF												
	Gas Meter Cubic Feet (1)	Gas Meter Cubic Feet (2)	Gas Meter Cubic Feet (amb)	Sample Rate, cfm (1)	Sample Rate, cfm (2)	Orifice dH (1)	Orifice dH (2)	Orifice dH (amb)	Meter oF (1)	Meter oF (2)	Meter oF (amb)	Meter Vac. In. Hg. (1)	Meter Vac. In. Hg. (2)	Dilution Tunnel Temp.	Dilution Tunnel dP	Pro. Rate (%) (1)	Pro. Rate (%) (2)	Scale Reading	Weight Change	Load Side Liquid Flow Rate	Boiler Side Liquid Flow Rate (optional)	Thermopile ΔT	Boiler to Heat Exch. Temp.	Heat Exch to Boiler Temp.	Inlet Load Temp.	Outlet Load Temp.	Stack	Filter (1)	Filter (2)	Ambient		Specific Heat of Inlet Water (BTU/lb-°F)	Mass Flow Rate of Inlet Water (lb/min)	Heat Output, Btu
903	145.032	146.329		0.16	0.16	1.34	1.09	0.23	79	78	65	1.98	1.5	68	0.014	96	96	36.3	0.01	0.72		109.36	165.86	161.56	56.34	165.69	101	66	67	65		1.001	6.020	659
904	145.194	146.493		0.16	0.16	1.35	1.09	0.23	79	78	65	1.97	1.5	68	0.014	96	97	36.3	-0.04	0.76		108.83	165.23	161.08	56.35	165.18	100	66	67	65		1.001	6.319	689
905	145.355	146.656		0.16	0.16	1.34	1.09	0.23	79	78	65	1.96	1.5	68	0.014	96	96	36.2	0.09	0.64		108.33	165.00	161.48	56.45	164.78	100	66	67	65		1.001	5.355	581
906	145.517	146.820		0.16	0.16	1.34	1.09	0.23	79	78	65	1.97	1.5	68	0.014	96	97	36.2	0.03	0.72		108.16	164.65	160.48	56.32	164.49	99	66	66	65		1.001	6.014	651
907	145.678	146.983		0.16	0.16	1.35	1.09	0.23	79	78	65	1.98	1.5	68	0.014	96	96	36.2	-0.04	0.76		107.80	164.28	160.13	56.24	164.04	99	66	66	65		1.001	6.331	683
908	145.840	147.148		0.16	0.16	1.35	1.09	0.23	79	78	65	1.97	1.5	68	0.013	100	101	36.3	-0.03	0.74		107.54	163.76	159.70	56.08	163.62	98	66	66	65		1.001	6.179	665
909	146.002	147.311		0.16	0.16	1.35	1.09	0.23	79	78	65	1.97	1.5	69	0.013	100	100	36.3	-0.02	0.72		107.49	163.55	159.52	55.90	163.40	98	66	66	65		1.001	6.007	647
910	146.163	147.474		0.16	0.16	1.35	1.09	0.23	79	78	65	1.97	1.5	68	0.013	99	100	36.2	0.08	0.70		107.29	163.17	159.28	55.75	163.04	97	66	66	65		1.001	5.848	628
911	146.325	147.637		0.16	0.16	1.35	1.09	0.23	79	78	65	1.97	1.5	68	0.014	96	96	36.3	-0.05	0.74		106.95	162.82	158.87	55.75	162.70	96	66	66	65		1.001	6.176	661
912	146.487	147.801		0.16	0.16	1.34	1.09	0.23	79	78	65	1.97	1.5	69	0.014	97	97	36.2	0.08	0.74		106.45	162.35	158.40	55.76	162.21	130	66	66	65		1.001	6.172	658
913	146.648	147.965		0.16	0.16	1.34	1.08	0.23	79	78	66	1.98	1.5	73	0.014	96	97	36.0	0.16	0.74		106.07	162.05	158.08	55.83	161.89	136	66	67	66		1.001	6.180	656
914	146.809	148.128		0.16	0.16	1.35	1.09	0.23	79	78	65	1.97	1.5	70	0.015	93	93	36.2	-0.22	0.74		105.74	161.86	157.86	55.91	161.65	126	66	66	65		1.001	6.171	653
915	146.971	148.291		0.16	0.16	1.35	1.08	0.23	79	78	65	1.97	1.5	72	0.013	100	100	36.2	0.08	0.72		105.24	161.43	157.48	56.02	161.26	142	66	67	65		1.001	6.010	633
916	147.132	148.455		0.16	0.16	1.34	1.08	0.23	79	78	66	1.98	1.5	74	0.014	96	98	36.1	0.10	0.72		104.80	161.08	157.19	56.12	160.92	154	66	67	66		1.001	6.013	631
917	147.294	148.618		0.16	0.16	1.35	1.08	0.23	79	78	65	1.98	1.5	75	0.015	94	94	35.9	0.11	0.74		104.35	160.69	156.78	56.20	160.55	162	67	67	65		1.001	6.171	645
918	147.455	148.781		0.16	0.16	1.35	1.09	0.23	79	78	66	1.98	1.5	76	0.013	100	101	35.9	0.06	0.72		103.99	160.42	156.58	56.23	160.23	170	67	67	66		1.001	6.016	626
919	147.617	148.945		0.16	0.16	1.34	1.09	0.23	79	78	66	1.97	1.5	77	0.015	94	95	35.8	0.12	0.75		103.70	160.11	156.24	56.24	159.94	179	67	67	66		1.001	6.277	652
920	147.778	149.108		0.16	0.16	1.34	1.08	0.23	79	78	66	1.97	1.5	80	0.015	94	94	35.5	0.26	0.73		103.39	159.86	155.97	56.25	159.63	193	67	67	66		1.001	6.088	630
921	147.939	149.271		0.16	0.16	1.35	1.09	0.23	79	78	66	1.97	1.5	82	0.013	101	101	35.3	0.22	0.75		103.28	159.71	155.85	56.22	159.50	205	67	68	66		1.001	6.278	649
922	148.101	149.434		0.16	0.16	1.35	1.09	0.23	79	78	66	1.97	1.5	84	0.014	98	98	35.0	0.25	0.74		103.27	159.74	155.87	56.22	159.49	217	68	68	66		1.001	6.166	638
923	148.262	149.597		0.16	0.16	1.34	1.08	0.23	79	78	66	1.98	1.5	85	0.015	94	95	34.6	0.38	0.72		103.26	159.82	155.95	56.22	159.48	233	68	68	66		1.001	6.004	621
924	148.423	149.760		0.16	0.16	1.34	1.08	0.23	79	78	66	1.99	1.5	88	0.014	98	98	34.2	0.42	0.74		103.56	160.16	156.44	56.20	159.76	257	68	69	66		1.001	6.169	640
925	148.584	149.922		0.16	0.16	1.33	1.08	0.23	79	78	66	2	1.5	91	0.015	95	95	33.7	0.50	0.72		103.88	160.55	156.59	56.25	160.13	279	69	69	66		1.001	6.005	625
926	148.744	150.084		0.16	0.16	1.34	1.08	0.23	79	78	66	2	1.5	94	0.014	98	98	33.4	0.36	0.74		104.31	161.01	157.03	56.31	160.62	296	69	70	66		1.001	6.159	643
927	148.905	150.246		0.16	0.16	1.34	1.08	0.23	79	78	66	2.02	1.5	96	0.014	98	98	32.8	0.54	0.78		105.02	161.91	157.93	56.42	161.44	311	70	70	66		1.001	6.488	682
928	149.065	150.409		0.16	0.16	1.34	1.08	0.23	79	78	66	2	1.5	98	0.014	98	99	32.7	0.18	0.76		105.59	162.58	158.51	56.53	162.12	322	70	71	66		1.001	6.330	669
929	149.225	150.570		0.16	0.16	1.34	1.07	0.23	79	78	66	2	1.5	100	0.014	98	98	31.9	0.77	0.72		106.55	163.88	159.79	56.72	163.27	332	70	71	66		1.001	6.008	641
930	149.386	150.731		0.16	0.16	1.34	1.07	0.23	79	78	66	2.01	1.5	101	0.015	95	95	31.3	0.60	0.76		107.40	164.84	160.72	56.87	164.27	340	71	72	66		1.001	6.322	680
931	149.546	150.893		0.16	0.16	1.34	1.08	0.23	79	78	66	2.02	1.5	103	0.014	98	99	31.0	0.32	0.72		108.33	165.87	161.84	57.01	165.34	348	71	72	66		1.001	6.005	651
932	149.706	151.055		0.16	0.16	1.34	1.06	0.23	79	78	66	2.02	1.5	104	0.014	98	99	30.3	0.61	0.76		109.19	167.00	162.87	57.18	166.37	353	72	73	66		1.001	6.344	694
933	149.866	151.215		0.16	0.16	1.34	1.07	0.23	79	78	66	2.01	1.5	105	0.014	99	98	29.9	0.48	0.72		110.46	168.36	164.26	57.32	167.78	358	72	73	66		1.001	5.968	660
934	150.026	151.376		0.16	0.16	1.33	1.07	0.23	79	78	67	2.03	1.5	106	0.014	99	99	29.4	0.51	0.70		111.67	169.62	165.44	57.41	169.09	363	73	73	67		1.001	5.844	653
935	150.186	151.538		0.16	0.16	1.34	1.07	0.23	79	78	67	2.03	1.5	107	0.015	95	96	28.8	0.55	0.74		112.73	170.95	166.61	57.53	170.26	367	73	74	67		1.001	6.163	696
936	150.346	151.698		0.16	0.16	1.34	1.05	0.23	79	78	67	2.03	1.6	108	0.014	99	98	28.2	0.64	0.74		113.69	171.89	167.54	57.61	171.30	370	73	74	67		1.001	6.163	702
937	150.507	151.858		0.16	0.16	1.33	1.06	0.23	79	78	67	2.02	1.6	109	0.014	100	98	27.8	0.42	0.78		114.87	173.11	168.73	57.64	172.51	373	74	75	67		1.001	6.487	746
938	150.667	152.019		0.16	0.16	1.33	1.06	0.23	79	78	67	2.04	1.6	109	0.014	99	99	27.3	0.44	0.74		116.19	174.56	170.08	57.66	173.85	373	74	75	67		1.001	6.162	717
939	150.827	152.180		0.16	0.16	1.33	1.06	0.23	79	78	67	2.05	1.6	109	0.014	99	99	26.7	0.60	0.72		117.78	176.12	171.62	57.64	175.42	376	74	75	67		1.001	6.005	708
940	150.986	152.340		0.16	0.16	1.32	1.06	0.23	79	78	67	2.04	1.6	109	0.014	98	98	26.2	0.47	0.76		119.09	177.35	172.75	57.62	176.72	376	75	76	67		1.001	6.330	755
941	151.146	152.500		0.16	0.16	1.32	1.05	0.23	79	78	67	2.03	1.6	109	0.014	99	98	25.7	0.53	0.70		119.98	178.23	173.83	57.58	177.56	375	75	76	67		1.001	5.841	702
942	151.306	152.661		0.16	0.16	1.32	1.05	0.23	79	78	67	2.03	1.6	110	0.015	96	96	25.1	0.66	0.74		121.34	179.48	174.92	57.60	178.94	377	75	76	67		1.001	6.164	749
943	151.465	152.820		0.16	0.16	1.32	1.04	0.23	79	78	67	2.04	1.6	109	0.014	98	98	24.6	0.42	0.72		122.43	180.65	176.08	57.61	180.04	377	75	76	67		1.001	6.004	736
944	151.624	152.979		0.16	0.16	1.32	1.05	0.23	79	78	67	2.04	1.6	110	0.014	98	98	24.3	0.35	0.74		124.10	182.43	177.58	57.60	181.70	380	75	76	67		1.001	6.164	766
945	151.784	153.140		0.16	0.16	1.32	1.05	0.23	79	78	67	2.02	1.6	102	0.014	98	98	23.9	0.39	0.72		125.30	183.33	178.57	57.60	182.90	355	75	76	67		1.001	6.007	754
946	151.944	153.300		0.16	0.16	1.32	1.05	0.23	79	78	68	2.02	1.6	89	0.015	94	93	23.8	0.13	0.76		125.60	183.65	178.88	57.61	183.21	323	74	75	68		1.001	6.332	796
947	152.104	153.460		0.16	0.16	1.33	1.05	0.23	79	78	67	2.02	1.6	85	0.015	94	93	23.3	0.45	0.72		126.25	184.40	179.58	57.67	183.92	304	73	74	67		1.001	6.004	759
948	152.264	153.621		0.16	0.16	1.32	1.05	0.23	79	78	67	2.02	1.6	82	0.013	100	100	23.3	0.04	0.72		126.60	184.85	179.98	57.73	184.32	290	73	73	67		1.001	5.999	760
949	152.424	153.782		0.16	0.16	1.34	1.09	0.23	79	78	67	2.02	1.6	81	0.014	96	96	23.0	0.30	0.67		126.85	185.13	180.58	57.78	184.63	278	72	73	67		1.001	5.600	711
950	152.585	153.945		0.16	0.16	1.34	1.09	0.23	79	78	67	2.04	1.6	80	0.014	97	97	23.1	-0.09	0.68		127.15	185.30	180.96	57.85	185.00	268	72	72	67		1.001	5.677	723
951	152.746	154.109		0.16	0.16	1.34	1.09	0.23	79	78	68	2.03	1.6	79	0.015	94	95	22.9	0.18	0.49		127.16	185.78	182.44	57.98	185.14	259	72	72	68		1.001	4.059	517
952	152.907	154.273		0.16	0.16	1.34	1.09	0.23	79	78	67	2.02	1.6	78	0.014	97	98	22.8	0.12	0.53		127.45	186.11	182.37	58.10	185.54	252	71	72	67		1.001	4.377	558
953	153.068	154.437		0.16	0.16	1.34	1.10	0.23	79	78	67	2.03	1.6	78	0.015	93	95	22.7	0.02	0.56		127.59	186.25	182.56	58.25	185.83	245	71	72	67		1.001	4.865	622
954	153.229	154.600		0.16	0.16	1.34	1.09	0.23	79	78	68	2.04	1.6	77	0.014	97	97	22.6	0.13	0.56		127.46	186.38	182.71	58.44	185.90	239	71	72	68		1.001	4.700	600
955	153.390	154.764		0.16	0.16	1.34	1.10	0.23	79	78	68	2.03	1.6	77	0.014	97	98	22.7	-0.05	0.54		127.31	186.38	182.74	58.60	185.91	233	71	72	68		1.001	4.540	579
956	153.551	154.928		0.16	0.16	1.34	1.10	0.23	79	79	68	2.04	1.6	77	0.014	97	98	22.6	0.05	0.56		127.28	186.51	182.84	58.73	186.01	228	71	72	68		1.001	4.702	599
957	153.713	155.092		0.16	0.16	1.34	1.10	0.23	79	79	68	2.01	1.6	76	0.013	101	101	22.7	-0.08	0.54		127.23	186.57	182.95	58.83	186.05	225	71	72	68		1.001	4.541	578
958	153.874	155.257		0.16	0.16	1.34	1.10	0.23	79	79	68	2.02	1.6	75	0.013	100	102	22.5	0.15	0.58		127.26	186.62	182.99	58.89	186.15	222	71	72	68		1.001	4.862	620
959	154.035	155.422		0.16	0.16	1.34	1.10	0.23	79	79	68	2.01	1.6	75	0.015	93	95	22.5	0.02	0.56		127.39	186.68	183.15	58.93	186.32	218	71	71	68		1.001	4.705	600
960	154.196	155.586		0.16	0.16	1.34	1.10	0.23	79	79	68	2.03	1.6	74	0.015	93	94	22.6	-0.05	0.53		127.30	186.66	183.12	58.97	186.27	214	71	71	68		1.001	4.378	558
961	154.357	155.750		0.16	0.16	1.34	1.10	0.23	79	79	68	2.03	1.6	74	0.014	96	97	22.3	0.25	0.56		127.05	186.47	182.97	59.02	186.07	209	71	71	68		1.001	4.701	598
962	154.518	155.915		0.16	0.16	1.34	1.10	0.23	79	79	68	2.02	1.6	74	0.015	93	95	22.5	-0.16	0.60		126.88	186.34	182.91	59.06	185.93	205	71	71	68		1.001	5.025	638
963	154.679	156.079		0.16	0.16	1.33	1.10	0.23	79	79	68	2.01	1.6	74	0.015	93	94	22.3	0.15	0.54		126.73	186.34	182.83	59.09	185.82	201	71	71	68		1.001	4.483	569

Elapsed Time	Particulate Sampling Data																	Fuel Weight, lb		Flow, gpm		Temperature Data, oF												
	Gas Meter Cubic Feet (1)	Gas Meter Cubic Feet (2)	Gas Meter Cubic Feet (amb)	Sample Rate, cfm (1)	Sample Rate, cfm (2)	Orifice dH (1)	Orifice dH (2)	Orifice dH (amb)	Meter oF (1)	Meter oF (2)	Meter oF (amb)	Meter Vac. In. Hg. (1)	Meter Vac. In. Hg. (2)	Dilution Tunnel Temp.	Dilution Tunnel dP	Pro. Rate (%) (1)	Pro. Rate (%) (2)	Scale Reading	Weight Change	Load Side Liquid Flow Rate	Boiler Side Liquid Flow Rate (optional)	Thermopile ΔT	Boiler to Heat Exch. Temp.	Heat Exch to Boiler Temp.	Inlet Load Temp.	Outlet Load Temp.	Stack	Filter (1)	Filter (2)	Ambient		Specific Heat of Inlet Water (BTU/lb-°F)	Mass Flow Rate of Inlet Water (lb/min)	Heat Output, Btu
964	154.840	156.243		0.16	0.16	1.33	1.10	0.23	79	79	68	2.03	1.6	74	0.014	96	97	22.4	-0.04	0.57		126.85	186.36	182.97	59.12	185.97	197	71	71	68		1.001	4.716	599
965	155.002	156.408		0.16	0.16	1.33	1.10	0.23	79	79	68	2.02	1.6	74	0.014	97	98	22.4	-0.03	0.58		126.68	186.21	182.80	59.14	185.82	194	70	71	68		1.001	4.805	609
966	155.163	156.573		0.16	0.17	1.34	1.10	0.23	79	79	68	2.01	1.6	74	0.014	96	98	22.4	-0.01	0.58		126.65	186.16	182.92	59.17	185.82	190	70	71	68		1.001	4.861	616
967	155.324	156.737		0.16	0.16	1.33	1.10	0.23	79	79	68	2.02	1.6	74	0.014	96	97	22.4	-0.04	0.55		126.38	186.04	182.54	59.22	185.60	187	70	71	68		1.001	4.542	575
968	155.485	156.902		0.16	0.16	1.34	1.10	0.23	79	79	68	2.01	1.6	76	0.015	93	95	22.3	0.15	0.54		126.22	185.91	182.61	59.27	185.48	183	70	71	68		1.001	4.535	573
969	155.646	157.066		0.16	0.16	1.33	1.10	0.23	79	79	68	2.02	1.6	74	0.014	96	97	22.4	-0.09	0.54		126.17	185.88	182.61	59.31	185.48	180	70	71	68		1.001	4.541	574
970	155.807	157.230		0.16	0.16	1.33	1.10	0.23	80	79	68	2.03	1.6	74	0.015	93	94	22.5	-0.09	0.54		125.98	185.72	182.43	59.33	185.30	177	70	71	68		1.001	4.540	573
971	155.969	157.395		0.16	0.17	1.33	1.10	0.23	80	79	68	2.02	1.6	73	0.016	90	92	22.4	0.12	0.53		125.94	185.59	182.26	59.28	185.22	174	70	71	68		1.001	4.383	553
972	156.130	157.559		0.16	0.16	1.33	1.10	0.23	80	79	68	2.02	1.6	73	0.014	96	97	22.3	0.03	0.53		126.06	185.60	182.11	59.11	185.17	171	70	70	68		1.001	4.383	553
973	156.291	157.724		0.16	0.16	1.33	1.10	0.23	80	79	68	2.03	1.6	73	0.014	96	98	22.4	-0.11	0.57		126.06	185.44	182.12	58.93	184.99	169	70	70	68		1.001	4.711	595
974	156.452	157.889		0.16	0.17	1.33	1.10	0.23	80	79	68	2.02	1.6	73	0.014	96	98	22.5	-0.02	0.57		126.03	185.22	181.93	58.79	184.82	166	70	70	68		1.001	4.710	594
975	156.613	158.053		0.16	0.16	1.33	1.10	0.23	80	79	68	2.01	1.6	72	0.014	96	97	22.4	0.11	0.53		126.09	185.03	181.59	58.62	184.71	164	70	70	68		1.001	4.386	554
976	156.774	158.217		0.16	0.16	1.34	1.10	0.23	80	79	68	2.02	1.6	72	0.014	96	97	22.4	-0.08	0.58		125.87	184.83	181.57	58.56	184.43	161	70	70	68		1.001	4.860	612
977	156.935	158.382		0.16	0.16	1.33	1.10	0.23	80	79	68	2.03	1.6	72	0.015	93	94	22.5	-0.02	0.55		125.86	184.70	181.27	58.48	184.34	159	70	70	68		1.001	4.544	573
978	157.097	158.546		0.16	0.16	1.34	1.10	0.23	80	79	68	2.03	1.6	72	0.014	97	97	22.3	0.12	0.54		125.85	184.75	181.47	58.44	184.29	156	70	70	68		1.001	4.508	568
979	157.258	158.711		0.16	0.17	1.34	1.10	0.23	80	79	68	2.03	1.6	72	0.015	93	94	22.4	-0.09	0.54		125.72	184.53	181.30	58.38	184.10	154	70	70	68		1.001	4.522	569
980	157.419	158.876		0.16	0.16	1.33	1.10	0.23	80	79	68	2.02	1.6	72	0.013	100	101	22.4	0.01	0.57		125.59	184.23	180.82	58.32	183.91	152	70	70	68		1.001	4.759	598
981	157.580	159.041		0.16	0.16	1.33	1.10	0.23	80	79	68	2.02	1.6	71	0.014	96	98	22.4	-0.02	0.55		125.37	183.98	180.56	58.25	183.62	150	69	70	68		1.001	4.546	571
982	157.742	159.205		0.16	0.16	1.33	1.10	0.23	80	79	67	2.01	1.6	71	0.014	97	97	22.3	0.09	0.57		125.32	183.77	180.39	58.14	183.47	148	69	70	67		1.001	4.714	591
983	157.903	159.369		0.16	0.16	1.34	1.10	0.23	80	79	67	2.02	1.6	71	0.013	100	101	22.5	-0.18	0.57		125.10	183.61	180.19	58.07	183.17	146	69	69	67		1.001	4.714	590
984	158.064	159.534		0.16	0.16	1.34	1.10	0.23	80	79	67	2.01	1.6	71	0.015	93	94	22.4	0.15	0.55		124.96	183.37	179.93	58.02	182.97	144	69	69	67		1.001	4.554	570
985	158.226	159.698		0.16	0.16	1.34	1.11	0.23	80	79	67	2.01	1.6	71	0.016	90	91	22.5	-0.12	0.57		124.86	183.24	179.82	57.97	182.83	142	69	69	67		1.001	4.716	589
986	158.387	159.863		0.16	0.16	1.34	1.11	0.23	80	79	67	2.01	1.6	71	0.015	93	94	22.5	0.00	0.55		124.71	183.05	179.63	57.91	182.62	141	69	69	67		1.001	4.555	569
987	158.548	160.028		0.16	0.16	1.34	1.11	0.23	80	79	67	2.01	1.6	71	0.015	93	94	22.4	0.06	0.55		124.68	182.88	179.53	57.87	182.54	159	69	69	67		1.001	4.559	569
988	158.709	160.193		0.16	0.17	1.33	1.09	0.23	80	79	67	2.02	1.6	81	0.015	94	95	22.0	0.39	0.53		124.37	182.52	179.15	57.77	182.14	188	70	70	67		1.001	4.393	547
989	158.870	160.357		0.16	0.16	1.35	1.10	0.23	80	79	67	2	1.6	75	0.015	93	94	22.2	-0.20	0.57		124.27	182.34	179.06	57.70	181.97	175	69	69	67		1.001	4.715	587
990	159.032	160.522		0.16	0.16	1.34	1.11	0.23	80	79	67	2.01	1.5	71	0.013	100	101	22.2	0.03	0.57		124.16	182.15	178.78	57.62	181.78	163	69	69	67		1.001	4.711	586
991	159.194	160.687		0.16	0.17	1.35	1.11	0.23	80	79	66	2.01	1.5	70	0.014	96	98	22.1	0.10	0.59		124.19	182.09	178.67	57.48	181.67	154	69	69	66		1.001	4.881	607
992	159.356	160.852		0.16	0.16	1.35	1.11	0.23	80	79	67	2	1.5	70	0.015	93	94	22.2	-0.08	0.51		124.26	181.93	178.78	57.36	181.62	149	69	69	67		1.001	4.231	526
993	159.517	161.018		0.16	0.17	1.35	1.12	0.23	80	79	66	2.01	1.5	70	0.014	96	98	22.1	0.11	0.53		124.20	181.81	178.48	57.22	181.42	145	68	69	66		1.001	4.393	546
994	159.679	161.183		0.16	0.16	1.35	1.11	0.23	80	79	66	2.01	1.5	70	0.014	96	98	22.0	0.13	0.55		124.09	181.47	178.13	57.07	181.15	142	68	69	66		1.001	4.558	566
995	159.841	161.348		0.16	0.17	1.34	1.12	0.23	80	79	66	2.01	1.5	70	0.015	93	94	22.2	-0.26	0.60		123.89	181.20	177.81	56.95	180.84	139	68	69	66		1.001	4.996	620
996	160.003	161.513		0.16	0.16	1.34	1.06	0.23	80	79	67	1.99	1.5	69	0.015	93	94	22.1	0.09	0.57		123.82	181.10	177.70	56.80	180.63	137	68	68	67		1.001	4.719	585
997	160.165	161.674		0.16	0.16	1.34	1.06	0.23	80	79	66	1.99	1.5	69	0.014	96	95	22.1	-0.02	0.57		123.96	180.94	177.58	56.61	180.57	134	68	68	66		1.001	4.710	585
998	160.326	161.836		0.16	0.16	1.34	1.06	0.23	80	79	66	2	1.5	69	0.015	93	92	22.2	-0.05	0.53		123.86	180.72	177.48	56.52	180.38	133	68	68	66		1.001	4.394	545
999	160.488	161.998		0.16	0.16	1.35	1.06	0.23	80	79	66	2.01	1.5	69	0.014	96	96	22.2	0.02	0.57		123.70	180.43	177.11	56.38	180.08	131	68	68	66		1.001	4.722	585
1000	160.650	162.160		0.16	0.16	1.34	1.07	0.23	80	79	66	1.99	1.5	69	0.012	104	103	22.2	0.02	0.53		123.36	180.14	176.85	56.30	179.66	130	68	68	66		1.001	4.394	543
1001	160.812	162.322		0.16	0.16	1.34	1.06	0.23	80	79	67	2.01	1.5	69	0.016	90	90	22.1	0.07	0.59		123.35	179.94	176.61	56.19	179.54	128	68	68	67		1.001	4.884	603
1002	160.974	162.483		0.16	0.16	1.35	1.07	0.23	80	79	66	1.99	1.5	69	0.014	96	95	21.9	0.14	0.59		123.25	179.68	176.29	56.15	179.40	127	68	68	66		1.001	4.878	602
1003	161.136	162.645		0.16	0.16	1.35	1.07	0.23	80	79	66	2	1.5	69	0.015	93	92	22.1	-0.19	0.55		122.95	179.50	176.16	56.12	179.07	125	68	68	66		1.001	4.556	561
1004	161.298	162.808		0.16	0.16	1.34	1.07	0.23	80	79	66	2.01	1.5	69	0.014	96	96	22.2	-0.03	0.57		122.89	179.33	176.02	56.10	178.99	124	68	68	66		1.001	4.723	581
1005	161.460	162.969		0.16	0.16	1.34	1.06	0.23	80	79	66	1.99	1.5	69	0.014	96	95	22.1	0.06	0.55		122.58	179.12	175.77	56.14	178.72	123	68	68	66		1.001	4.562	560
1006	161.622	163.131		0.16	0.16	1.34	1.06	0.23	80	79	66	2	1.5	69	0.014	96	96	22.1	0.02	0.57		122.35	178.91	175.64	56.21	178.55	121	68	68	66		1.001	4.720	578
1007	161.784	163.293		0.16	0.16	1.35	1.07	0.23	80	79	66	2	1.5	69	0.014	96	96	22.1	0.00	0.57		122.00	178.62	175.33	56.28	178.28	120	68	68	66		1.001	4.721	577
1008	161.946	163.455		0.16	0.16	1.34	1.07	0.23	80	79	66	2.01	1.5	69	0.014	96	96	22.1	-0.03	0.60		121.75	178.36	175.13	56.35	178.10	119	67	67	66		1.001	5.023	612
1009	162.108	163.617		0.16	0.16	1.34	1.06	0.23	80	79	66	1.99	1.5	69	0.013	100	99	22.2	-0.08	0.57		121.37	178.12	174.88	56.42	177.79	118	67	67	66		1.001	4.724	574
1010	162.270	163.778		0.16	0.16	1.34	1.06	0.23	80	79	66	2	1.5	69	0.014	96	95	22.1	0.11	0.53		121.11	177.91	174.66	56.48	177.59	117	67	67	66		1.001	4.436	538
1011	162.432	163.940		0.16	0.16	1.35	1.07	0.23	80	79	66	2.01	1.5	69	0.014	96	96	22.1	-0.05	0.57		120.71	177.61	174.34	56.53	177.23	116	67	67	66		1.001	4.717	570
1012	162.594	164.103		0.16	0.16	1.35	1.07	0.23	80	79	66	1.99	1.5	69	0.014	96	96	22.1	-0.03	0.55		120.52	177.44	174.18	56.55	177.07	115	67	67	66		1.001	4.580	553
1013	162.755	164.264		0.16	0.16	1.34	1.06	0.23	79	79	66	1.99	1.5	69	0.016	90	89	22.1	0.07	0.59		120.35	177.24	173.98	56.57	176.93	114	67	67	66		1.001	4.883	588
1014	162.917	164.426		0.16	0.16	1.34	1.06	0.23	79	79	66	1.99	1.5	70	0.014	97	96	22.1	0.01	0.55		119.95	176.86	173.62	56.60	176.55	113	67	67	66		1.001	4.553	547
1015	163.079	164.588		0.16	0.16	1.35	1.07	0.23	79	79	66	2	1.5	69	0.014	97	96	22.3	-0.23	0.49		119.67	176.71	173.51	56.66	176.33	112	67	67	66		1.001	4.067	487
1016	163.241	164.750		0.16	0.16	1.34	1.07	0.23	79	78	66	2	1.5	69	0.014	97	96	22.1	0.15	0.55		119.32	176.50	173.32	56.80	176.12	111	67	67	66		1.001	4.552	544
1017	163.403	164.912		0.16	0.16	1.35	1.06	0.23	79	79	66	2.01	1.5	69	0.015	93	92	22.1	0.09	0.51		118.91	176.27	173.26	56.97	175.88	110	67	67	66		1.001	4.232	504
1018	163.565	165.073		0.16	0.16	1.35	1.07	0.23	79	78	66	1.99	1.5	69	0.013	100	99	22.2	-0.14	0.55		118.57	176.07	172.87	57.17	175.75	110	67	67	66		1.001	4.553	541
1019	163.727	165.235		0.16	0.16	1.34	1.06	0.23	79	78	66	2.01	1.5	75	0.014	97	96	22.1	0.10	0.55		118.09	175.72	172.60	57.37	175.46	147	68	68	66		1.001	4.553	538
1020	163.888	165.397		0.16	0.16	1.34	1.06	0.23	79	78	66	2.02	1.5	78	0.014	97	97	22.0	0.08	0.57		117.58	175.52	172.38	57.56	175.14	162	68	68	66		1.001	4.716	555
1021	164.050	165.557		0.16	0.16	1.35	1.06	0.23	79	78	66	1.99	1.5	71	0.014	97	95	22.1	-0.05	0.55		117.24	175.32	172.16	57.75	174.99	144	67	67	66		1.001	4.555	535
1022	164.212	165.719		0.16	0.16	1.35	1.07	0.23	79	78	66	2	1.5	70	0.014	97	96	22.0	0.09	0.53		116.77	175.05	171.91	57.93	174.71	132	67	67	66		1.001	4.389	513
1023	164.374	165.881		0.16	0.16	1.35	1.06	0.23	79	78	66	2.01	1.5	70	0.014	97	96	21.9	0.08	0.51		116.40	174.92	171.73	58.16	174.57	126	67	67	66		1.001	4.229	493
1024	164.536	166.043		0.16	0.16	1.35	1.06	0.23	79	78	66	2	1.5	71	0.015	93	93	22.0	-0.06	0.55		116.08	174.77	171.80	58.34	174.42	121	67	67	66		1.001	4.549	529

Elapsed Time	Particulate Sampling Data																	Fuel Weight, lb		Flow, gpm		Temperature Data, oF												
	Gas Meter Cubic Feet (1)	Gas Meter Cubic Feet (2)	Gas Meter Cubic Feet (amb)	Sample Rate, cfm (1)	Sample Rate, cfm (2)	Orifice dH (1)	Orifice dH (2)	Orifice dH (amb)	Meter oF (1)	Meter oF (2)	Meter oF (amb)	Meter Vac. In. Hg. (1)	Meter Vac. In. Hg. (2)	Dilution Tunnel Temp.	Dilution Tunnel dP	Pro. Rate (%) (1)	Pro. Rate (%) (2)	Scale Reading	Weight Change	Load Side Liquid Flow Rate	Boiler Side Liquid Flow Rate (optional)	Thermopile ΔT	Boiler to Heat Exch. Temp.	Heat Exch to Boiler Temp.	Inlet Load Temp.	Outlet Load Temp.	Stack	Filter (1)	Filter (2)	Ambient		Specific Heat of Inlet Water (BTU/lb-°F)	Mass Flow Rate of Inlet Water (lb/min)	Heat Output, Btu
1025	164.698	166.204		0.16	0.16	1.34	1.06	0.23	79	78	67	1.99	1.5	73	0.016	91	89	22.0	0.00	0.55		115.67	174.51	171.35	58.52	174.19	118	67	68	67		1.001	4.546	526
1026	164.860	166.366		0.16	0.16	1.35	1.06	0.23	79	78	67	2.01	1.5	71	0.012	104	104	22.0	-0.08	0.68		115.25	174.08	170.27	58.69	173.94	116	67	68	67		1.001	5.673	655
1027	165.021	166.528		0.16	0.16	1.35	1.06	0.23	79	78	67	2.01	1.5	71	0.013	100	100	22.0	0.06	0.64		114.69	173.53	169.75	58.65	173.34	115	67	68	67		1.001	5.362	616
1028	165.183	166.690		0.16	0.16	1.35	1.06	0.23	79	78	67	1.99	1.5	71	0.015	93	93	22.0	0.01	0.68		114.37	173.13	169.26	58.47	172.84	113	67	68	67		1.001	5.704	653
1029	165.345	166.851		0.16	0.16	1.34	1.06	0.23	79	78	67	2.01	1.5	70	0.014	97	95	22.0	0.00	0.72		114.39	172.91	169.01	58.24	172.63	112	67	68	67		1.001	6.009	688
1030	165.507	167.012		0.16	0.16	1.35	1.06	0.23	79	78	67	1.99	1.5	70	0.014	97	95	21.9	0.05	0.66		114.28	172.58	168.69	58.02	172.30	111	67	68	67		1.001	5.519	631
1031	165.669	167.174		0.16	0.16	1.35	1.06	0.23	79	78	67	1.99	1.5	70	0.015	93	93	22.0	-0.07	0.62		114.37	172.40	168.73	57.79	172.17	109	68	68	67		1.001	5.201	596
1032	165.830	167.337		0.16	0.16	1.36	1.06	0.23	79	78	67	2	1.5	70	0.015	93	93	22.0	-0.04	0.66		114.11	171.94	168.10	57.71	171.82	109	68	68	67		1.001	5.525	631
1033	165.992	167.497		0.16	0.16	1.34	1.06	0.23	79	78	67	2	1.5	70	0.014	97	95	21.9	0.12	0.68		113.81	171.66	167.84	57.60	171.40	108	68	68	67		1.001	5.688	648
1034	166.154	167.659		0.16	0.16	1.35	1.06	0.23	79	78	67	2	1.5	70	0.014	97	96	22.0	-0.11	0.70		113.54	171.29	167.47	57.50	171.03	107	68	68	67		1.001	5.849	665
1035	166.316	167.821		0.16	0.16	1.35	1.07	0.23	79	78	67	1.99	1.5	70	0.014	97	96	22.0	-0.02	0.66		113.29	171.07	167.18	57.42	170.71	106	67	68	67		1.001	5.529	627
1036	166.477	167.983		0.16	0.16	1.35	1.06	0.23	79	78	67	2.01	1.5	70	0.013	100	100	22.1	-0.08	0.64		113.15	170.80	167.00	57.37	170.52	105	67	68	67		1.001	5.367	608
1037	166.639	168.144		0.16	0.16	1.35	1.06	0.23	79	78	67	1.99	1.5	70	0.014	97	95	22.0	0.14	0.70		112.91	170.43	166.68	57.33	170.23	104	67	68	67		1.001	5.851	661
1038	166.801	168.306		0.16	0.16	1.35	1.06	0.23	79	78	67	2	1.5	70	0.015	93	93	21.9	0.07	0.66		112.56	170.06	166.33	57.29	169.85	104	67	68	67		1.001	5.524	623
1039	166.963	168.468		0.16	0.16	1.36	1.06	0.23	79	78	67	2	1.5	69	0.013	100	100	22.0	-0.12	0.68		112.26	169.76	165.99	57.25	169.52	103	67	68	67		1.001	5.692	640
1040	167.124	168.630		0.16	0.16	1.35	1.06	0.23	79	78	67	1.99	1.5	69	0.013	100	100	22.0	0.06	0.66		112.01	169.48	165.70	57.18	169.19	102	67	67	67		1.001	5.535	621
1041	167.286	168.791		0.16	0.16	1.35	1.06	0.23	79	78	66	2.01	1.5	69	0.014	97	95	22.0	-0.06	0.69		111.80	169.12	165.38	57.08	168.88	102	67	67	66		1.001	5.788	648
1042	167.448	168.953		0.16	0.16	1.35	1.06	0.23	79	78	66	2	1.5	69	0.014	97	96	22.0	0.01	0.66		111.58	168.83	165.08	56.97	168.55	101	67	67	66		1.001	5.532	618
1043	167.610	169.115		0.16	0.16	1.35	1.07	0.23	79	78	66	2.01	1.5	69	0.014	97	96	22.0	-0.03	0.68		111.39	168.51	164.73	56.83	168.22	100	67	67	66		1.001	5.695	635
1044	167.771	169.277		0.16	0.16	1.35	1.06	0.23	79	78	66	2	1.5	69	0.014	96	96	22.1	-0.03	0.66		111.22	168.17	164.43	56.71	167.93	100	67	67	66		1.001	5.497	612
1045	167.933	169.438		0.16	0.16	1.35	1.06	0.23	79	78	66	1.99	1.5	69	0.015	93	92	21.9	0.16	0.68		110.97	167.79	164.05	56.60	167.57	99	67	67	66		1.001	5.690	632
1046	168.095	169.600		0.16	0.16	1.36	1.06	0.23	79	78	66	2	1.5	69	0.015	93	93	21.9	0.02	0.61		110.86	167.67	163.87	56.48	167.34	99	67	67	66		1.001	5.044	560
1047	168.257	169.762		0.16	0.16	1.35	1.06	0.23	79	78	66	2.01	1.5	69	0.015	93	93	22.0	-0.06	0.68		110.74	167.29	163.63	56.36	167.10	98	67	67	66		1.001	5.692	631
1048	168.419	169.923		0.16	0.16	1.35	1.06	0.23	79	78	66	1.99	1.5	69	0.015	93	92	22.0	-0.07	0.66		110.48	167.01	163.33	56.26	166.74	98	67	67	66		1.001	5.531	612
1049	168.581	170.085		0.16	0.16	1.35	1.06	0.23	79	78	66	1.99	1.5	69	0.014	97	96	22.0	0.00	0.66		110.15	166.56	162.92	56.17	166.31	96	67	67	66		1.001	5.529	610
1050	168.742	170.246		0.16	0.16	1.35	1.07	0.23	79	78	66	2	1.5	69	0.014	96	95	21.9	0.08	0.68		109.90	166.14	162.59	56.09	166.00	111	67	67	66		1.001	5.691	626
1051	168.904	170.409		0.16	0.16	1.35	1.06	0.23	79	78	66	2	1.5	73	0.014	97	97	21.9	0.01	0.70		109.69	165.91	162.30	56.04	165.73	139	67	68	66		1.001	5.855	643
1052	169.066	170.570		0.16	0.16	1.35	1.06	0.23	79	78	66	1.99	1.5	71	0.013	100	99	22.0	-0.08	0.66		109.44	165.76	162.14	56.01	165.45	133	67	67	66		1.001	5.529	606
1053	169.228	170.731		0.16	0.16	1.35	1.06	0.23	79	78	66	2	1.5	69	0.014	97	95	21.9	0.13	0.66		109.14	165.31	161.69	55.99	165.13	121	67	67	66		1.001	5.536	605
1054	169.390	170.893		0.16	0.16	1.35	1.07	0.23	79	78	66	2	1.5	69	0.013	100	100	22.0	-0.14	0.66		108.86	165.12	161.51	55.98	164.84	114	67	67	66		1.001	5.533	603
1055	169.551	171.056		0.16	0.16	1.35	1.07	0.23	79	78	66	2	1.5	70	0.014	96	97	22.1	-0.03	0.62		108.47	164.73	161.13	56.01	164.47	110	67	67	66		1.001	5.205	565
1056	169.713	171.217		0.16	0.16	1.36	1.06	0.23	79	78	65	1.99	1.5	69	0.015	93	92	21.9	0.13	0.64		108.17	164.46	160.83	56.06	164.22	107	67	67	65		1.001	5.371	582
1057	169.875	171.378		0.16	0.16	1.35	1.07	0.23	79	78	66	1.99	1.5	69	0.015	93	92	21.8	0.12	0.67		107.76	164.16	160.53	56.16	163.92	105	67	67	66		1.001	5.572	601
1058	170.037	171.540		0.16	0.16	1.35	1.06	0.23	79	78	65	2.01	1.5	69	0.014	97	96	21.8	-0.02	0.68		107.28	163.84	160.24	56.36	163.63	103	67	67	65		1.001	5.698	612
1059	170.199	171.703		0.16	0.16	1.35	1.07	0.23	79	78	66	1.99	1.5	69	0.014	97	96	21.9	-0.04	0.64		106.75	163.55	159.95	56.58	163.34	102	67	67	66		1.001	5.370	574
1060	170.361	171.864		0.16	0.16	1.35	1.06	0.23	79	78	66	2	1.5	69	0.014	97	95	21.9	0.02	0.68		106.11	163.21	159.57	56.81	162.92	101	67	67	66		1.001	5.692	605
1061	170.523	172.026		0.16	0.16	1.35	1.06	0.23	79	78	66	1.99	1.5	69	0.014	97	96	22.0	-0.10	0.64		105.68	162.98	159.35	57.00	162.69	100	67	67	66		1.001	5.368	568
1062	170.684	172.188		0.16	0.16	1.35	1.06	0.23	79	78	66	1.99	1.5	69	0.014	96	96	21.9	0.06	0.68		105.28	162.68	159.15	57.19	162.47	99	67	67	66		1.001	5.690	600
1063	170.846	172.350		0.16	0.16	1.35	1.06	0.23	79	78	66	1.99	1.5	69	0.013	100	100	21.9	0.00	0.66		104.79	162.37	158.83	57.34	162.13	98	67	67	66		1.001	5.526	580
1064	171.008	172.512		0.16	0.16	1.36	1.06	0.23	79	78	66	2	1.5	69	0.015	93	93	21.8	0.11	0.68		104.40	162.09	158.58	57.48	161.87	97	67	67	66		1.001	5.688	595
1065	171.170	172.673		0.16	0.16	1.35	1.06	0.23	79	78	66	1.99	1.5	71	0.015	93	92	22.0	-0.18	0.68		103.99	161.80	158.32	57.57	161.56	123	67	67	66		1.001	5.686	592
1066	171.332	172.834		0.16	0.16	1.35	1.06	0.23	79	78	66	2.01	1.5	75	0.016	91	90	21.8	0.19	0.68		103.55	161.48	158.00	57.68	161.23	149	67	67	66		1.001	5.687	590
1067	171.493	172.997		0.16	0.16	1.35	1.06	0.23	79	78	66	2.01	1.5	76	0.013	100	101	21.7	0.06	0.68		103.18	161.07	157.65	57.76	160.93	165	67	67	66		1.001	5.674	586
1068	171.655	173.158		0.16	0.16	1.35	1.06	0.23	79	78	66	2	1.5	78	0.015	94	93	21.5	0.18	0.68		102.93	160.94	157.66	57.80	160.73	178	67	68	66		1.001	5.685	586
1069	171.817	173.319		0.16	0.16	1.35	1.07	0.23	79	78	66	1.99	1.5	81	0.016	91	90	21.3	0.20	0.66		102.68	160.80	157.38	57.87	160.55	193	68	68	66		1.001	5.481	563
1070	171.979	173.481		0.16	0.16	1.35	1.06	0.23	79	78	67	2.01	1.5	83	0.012	106	105	21.1	0.22	0.66		102.45	160.59	157.14	57.92	160.37	208	68	68	67		1.001	5.521	566
1071	172.140	173.643		0.16	0.16	1.35	1.06	0.23	79	78	67	2.01	1.5	85	0.015	94	94	20.8	0.29	0.68		102.36	160.71	157.22	57.99	160.35	221	68	69	67		1.001	5.699	584
1072	172.302	173.804		0.16	0.16	1.36	1.06	0.23	79	78	67	2	1.5	87	0.014	98	97	20.6	0.22	0.70		102.44	160.86	157.28	58.07	160.51	232	68	69	67		1.001	5.844	599
1073	172.463	173.965		0.16	0.16	1.35	1.06	0.23	79	78	67	2.01	1.5	90	0.014	98	97	20.3	0.25	0.64		102.44	160.95	157.46	58.16	160.60	244	69	69	67		1.001	5.350	549
1074	172.625	174.127		0.16	0.16	1.35	1.06	0.23	79	78	67	2.01	1.5	90	0.013	102	101	20.1	0.25	0.68		102.78	161.42	157.90	58.22	161.00	258	69	70	67		1.001	5.680	585
1075	172.786	174.287		0.16	0.16	1.35	1.05	0.23	79	78	67	2.01	1.5	92	0.013	102	100	19.7	0.43	0.66		103.23	161.97	158.39	58.22	161.45	273	69	70	67		1.001	5.515	570
1076	172.947	174.447		0.16	0.16	1.35	1.06	0.23	79	78	67	2.03	1.5	94	0.013	102	101	19.1	0.56	0.66		103.94	162.58	158.99	58.12	162.06	288	70	70	67		1.001	5.522	575
1077	173.108	174.608		0.16	0.16	1.35	1.06	0.23	79	78	67	2.03	1.5	95	0.013	102	101	18.9	0.18	0.66		104.95	163.52	159.82	58.01	162.96	300	70	71	67		1.001	5.522	580
1078	173.269	174.769		0.16	0.16	1.35	1.05	0.23	79	78	67	2.03	1.5	97	0.013	102	101	18.4	0.55	0.66		106.18	164.67	160.92	57.92	164.10	310	70	71	67		1.001	5.521	587
1079	173.430	174.928		0.16	0.16	1.35	1.05	0.23	79	78	67	2.02	1.5	98	0.014	99	97	18.1	0.25	0.64		107.54	166.00	162.27	57.83	165.37	318	71	71	67		1.001	5.363	577
1080	173.590	175.088		0.16	0.16	1.34	1.05	0.23	79	78	67	2.05	1.5	99	0.013	102	101	17.6	0.53	0.66		108.64	167.01	163.25	57.77	166.41	327	71	72	67		1.001	5.521	600
1081	173.751	175.248		0.16	0.16	1.34	1.04	0.23	79	78	67	2.05	1.6	102	0.015	96	94	17.0	0.55	0.70		109.82	168.23	164.42	57.72	167.54	342	72	72	67		1.001	5.843	642
1082	173.911	175.407		0.16	0.16	1.34	1.04	0.23	79	78	67	2.05	1.6	103	0.013	102	101	16.7	0.37	0.68		110.88	169.18	165.35	57.62	168.50	349	72	73	67		1.001	5.690	632
1083	174.072	175.567		0.16	0.16	1.34	1.04	0.23	79	78	67	2.05	1.6	104	0.014	99	98	16.0	0.67	0.68		112.01	170.10	166.34	57.53	169.53	354	72	73	67		1.001	5.688	638
1084	174.232	175.726		0.16	0.16	1.34	1.05	0.23	79	78	66	2.05	1.6	105	0.015	95	94	15.7	0.30	0.64		113.17	171.22	167.28	57.40	170.56	356	72	73	66		1.001	5.357	607
1085	174.393	175.886		0.16	0.16	1.33	1.06	0.23	79	78	67	2.06	1.6	105	0.014	99	98	15.2	0.51	0.68		114.46	172.50	168.51	57.26	171.73	357	73	74	67		1.001	5.683	651

Elapsed Time	Particulate Sampling Data																	Fuel Weight, lb		Flow, gpm		Temperature Data, oF												
	Gas Meter Cubic Feet (1)	Gas Meter Cubic Feet (2)	Gas Meter Cubic Feet (amb)	Sample Rate, cfm (1)	Sample Rate, cfm (2)	Orifice dH (1)	Orifice dH (2)	Orifice dH (amb)	Meter oF (1)	Meter oF (2)	Meter oF (amb)	Meter Vac. In. Hg. (1)	Meter Vac. In. Hg. (2)	Dilution Tunnel Temp.	Dilution Tunnel dP	Pro. Rate (%) (1)	Pro. Rate (%) (2)	Scale Reading	Weight Change	Load Side Liquid Flow Rate	Boiler Side Liquid Flow Rate (optional)	Thermopile ΔT	Boiler to Heat Exch. Temp.	Heat Exch to Boiler Temp.	Inlet Load Temp.	Outlet Load Temp.	Stack	Filter (1)	Filter (2)	Ambient		Specific Heat of Inlet Water (BTU/lb-°F)	Mass Flow Rate of Inlet Water (lb/min)	Heat Output, Btu
1086	174.554	176.047		0.16	0.16	1.33	1.05	0.23	79	78	67	2.05	1.6	105	0.015	96	95	14.9	0.32	0.68		115.83	173.71	169.72	57.12	172.95	358	73	74	67		1.001	5.687	659
1087	174.714	176.207		0.16	0.16	1.33	1.04	0.23	79	78	67	2.06	1.6	105	0.014	99	98	14.2	0.67	0.67		117.28	174.83	170.86	56.97	174.25	359	73	74	67		1.001	5.578	655
1088	174.874	176.366		0.16	0.16	1.33	1.05	0.23	79	78	66	2.06	1.6	105	0.013	102	101	13.8	0.43	0.68		118.46	175.99	171.96	56.86	175.32	361	73	74	66		1.001	5.685	674
1089	175.034	176.526		0.16	0.16	1.33	1.05	0.23	79	78	66	2.06	1.6	105	0.015	95	95	13.4	0.36	0.66		119.78	177.27	173.15	56.76	176.54	362	73	74	66		1.001	5.529	663
1090	175.194	176.685		0.16	0.16	1.33	1.04	0.23	79	78	66	2.08	1.6	106	0.014	99	97	13.0	0.45	0.66		121.02	178.56	174.38	56.66	177.69	364	73	74	66		1.001	5.521	669
1091	175.353	176.844		0.16	0.16	1.33	1.04	0.23	79	78	66	2.08	1.6	106	0.015	95	94	12.6	0.40	0.66		122.63	180.00	175.71	56.59	179.22	366	73	74	66		1.001	5.522	678
1092	175.513	177.004		0.16	0.16	1.32	1.03	0.23	79	78	66	2.09	1.6	107	0.015	95	95	12.2	0.40	0.66		124.12	181.28	177.05	56.53	180.65	367	73	74	66		1.001	5.522	686
1093	175.672	177.162		0.16	0.16	1.32	1.03	0.23	79	78	66	2.08	1.6	107	0.014	98	97	11.6	0.55	0.68		124.98	182.21	177.96	56.48	181.47	368	73	74	66		1.001	5.691	712
1094	175.832	177.321		0.16	0.16	1.32	1.03	0.23	79	78	66	2.07	1.6	107	0.013	102	101	11.3	0.28	0.68		126.37	183.58	179.18	56.44	182.81	360	73	74	66		1.001	5.686	719
1095	175.992	177.481		0.16	0.16	1.33	1.04	0.23	79	78	66	2.05	1.6	88	0.014	97	96	11.4	-0.07	0.66		127.26	184.32	179.96	56.46	183.72	323	72	73	66		1.001	5.526	704
1096	176.152	177.640		0.16	0.16	1.33	1.04	0.23	79	78	66	2.05	1.6	83	0.015	93	92	10.9	0.54	0.66		127.65	184.80	180.44	56.54	184.19	301	72	73	66		1.001	5.526	706
1097	176.313	177.800		0.16	0.16	1.33	1.04	0.23	79	78	66	2.05	1.6	79	0.014	97	96	10.8	0.03	0.66		127.97	185.08	180.76	56.70	184.67	288	71	72	66		1.001	5.522	707
1098	176.473	177.960		0.16	0.16	1.33	1.04	0.23	79	78	66	2.06	1.6	78	0.013	100	99	10.9	-0.02	0.68		128.15	185.54	181.18	56.86	185.02	276	71	72	66		1.001	5.687	730
1099	176.633	178.120		0.16	0.16	1.33	1.04	0.23	79	78	66	2.06	1.6	77	0.014	96	95	10.8	0.02	0.70		128.20	185.65	181.33	57.04	185.24	266	71	72	66		1.001	5.852	751
1100	176.794	178.280		0.16	0.16	1.33	1.04	0.23	79	78	66	2.07	1.6	76	0.014	97	95	10.6	0.20	0.67		128.05	185.80	181.37	57.21	185.27	257	71	71	66		1.001	5.586	716
1101	176.955	178.440		0.16	0.16	1.33	1.04	0.23	79	78	66	2.05	1.6	76	0.014	97	95	10.6	0.00	0.64		127.93	185.81	181.77	57.40	185.33	249	71	71	66		1.001	5.358	686
1102	177.115	178.600		0.16	0.16	1.32	1.04	0.23	79	78	66	2.06	1.6	75	0.013	100	99	10.5	0.13	0.68		127.86	185.77	181.46	57.57	185.42	242	71	71	66		1.001	5.687	728
1103	177.275	178.760		0.16	0.16	1.33	1.04	0.23	79	78	66	2.06	1.6	75	0.015	93	92	10.5	-0.03	0.64		127.65	185.71	181.76	57.72	185.37	236	70	71	66		1.001	5.356	685
1104	177.436	178.921		0.16	0.16	1.32	1.04	0.23	79	78	66	2.05	1.6	75	0.014	97	96	10.5	0.03	0.64		127.29	185.54	181.59	57.84	185.13	231	70	71	66		1.001	5.356	683
1105	177.596	179.080		0.16	0.16	1.32	1.04	0.23	79	78	66	2.05	1.6	75	0.014	96	95	10.6	-0.12	0.64		127.09	185.47	181.34	57.94	185.03	225	70	71	66		1.001	5.359	682
1106	177.756	179.240		0.16	0.16	1.32	1.04	0.23	79	78	66	2.05	1.6	75	0.014	96	95	10.4	0.20	0.66		127.08	185.48	181.16	58.02	185.10	221	70	71	66		1.001	5.520	702
1107	177.916	179.401		0.16	0.16	1.31	1.04	0.23	79	78	66	2.06	1.6	73	0.015	92	92	10.4	0.03	0.66		126.92	185.30	181.03	58.08	184.99	218	70	70	66		1.001	5.517	701
1108	178.076	179.560		0.16	0.16	1.32	1.04	0.23	79	78	67	2.06	1.6	73	0.016	90	88	10.6	-0.16	0.70		126.63	185.09	180.88	58.11	184.74	215	70	70	67		1.001	5.842	741
1109	178.237	179.720		0.16	0.16	1.32	1.04	0.23	79	78	67	2.06	1.6	73	0.013	100	99	10.5	0.09	0.68		126.49	185.02	180.75	58.12	184.61	211	70	70	67		1.001	5.680	719
1110	178.397	179.881		0.16	0.16	1.32	1.04	0.23	79	78	67	2.05	1.6	73	0.015	92	92	10.4	0.08	0.68		126.31	184.77	180.54	58.14	184.45	206	70	70	67		1.001	5.676	718
1111	178.557	180.040		0.16	0.16	1.32	1.04	0.23	79	78	67	2.06	1.6	73	0.015	92	91	10.4	-0.02	0.66		126.06	184.64	180.48	58.17	184.23	202	70	70	67		1.001	5.521	697
1112	178.718	180.200		0.16	0.16	1.33	1.04	0.23	79	78	67	2.06	1.6	73	0.014	96	95	10.3	0.08	0.66		125.96	184.48	180.55	58.22	184.18	198	70	70	67		1.001	5.502	694
1113	178.878	180.361		0.16	0.16	1.33	1.04	0.23	79	78	67	2.05	1.6	72	0.015	92	92	10.3	0.02	0.68		125.72	184.29	180.33	58.27	183.99	195	70	70	67		1.001	5.681	715
1114	179.038	180.520		0.16	0.16	1.33	1.04	0.23	79	78	67	2.05	1.6	73	0.014	96	94	10.4	-0.10	0.67		125.40	184.21	179.98	58.36	183.75	191	69	70	67		1.001	5.545	696
1115	179.199	180.680		0.16	0.16	1.33	1.04	0.23	79	78	67	2.05	1.6	73	0.015	93	92	10.3	0.12	0.68		125.23	184.07	179.80	58.46	183.69	188	69	70	67		1.001	5.681	712
1116	179.359	180.841		0.16	0.16	1.33	1.04	0.23	79	78	67	2.05	1.6	73	0.014	96	96	10.3	0.00	0.66		124.94	183.83	179.56	58.54	183.48	184	69	70	67		1.001	5.519	690
1117	179.519	181.000		0.16	0.16	1.33	1.04	0.23	79	78	67	2.05	1.6	72	0.015	92	91	10.2	0.11	0.66		124.71	183.66	179.39	58.59	183.30	181	69	70	67		1.001	5.517	689
1118	179.680	181.160		0.16	0.16	1.33	1.04	0.23	79	78	67	2.06	1.6	73	0.013	100	99	10.3	-0.15	0.62		124.38	183.27	179.04	58.64	183.03	178	69	70	67		1.001	5.190	646
1119	179.840	181.321		0.16	0.16	1.33	1.03	0.23	79	78	68	2.06	1.6	73	0.013	99	99	10.3	0.01	0.64		124.13	183.16	178.84	58.66	182.79	174	69	70	68		1.001	5.357	666
1120	180.001	181.481		0.16	0.16	1.33	1.04	0.23	79	79	67	2.05	1.6	72	0.012	104	102	10.2	0.07	0.70		123.97	182.91	178.65	58.61	182.58	171	69	69	67		1.001	5.841	725
1121	180.162	181.640		0.16	0.16	1.33	1.04	0.23	79	79	67	2.06	1.6	73	0.014	96	94	10.4	-0.13	0.66		123.95	182.86	178.62	58.52	182.47	169	69	69	67		1.001	5.515	684
1122	180.322	181.801		0.16	0.16	1.32	1.04	0.23	79	79	67	2.07	1.6	73	0.014	96	95	10.2	0.15	0.66		123.86	182.52	178.37	58.42	182.28	166	69	69	67		1.001	5.518	684
1123	180.482	181.961		0.16	0.16	1.32	1.04	0.23	79	79	67	2.05	1.6	74	0.015	93	92	10.3	-0.10	0.68		123.73	182.36	178.15	58.32	182.05	163	69	69	67		1.001	5.677	703
1124	180.643	182.120		0.16	0.16	1.32	1.04	0.23	79	79	68	2.06	1.6	73	0.014	96	94	10.3	0.06	0.68		123.77	182.19	178.04	58.20	181.97	160	69	69	68		1.001	5.673	703
1125	180.803	182.281		0.16	0.16	1.32	1.05	0.23	79	79	68	2.05	1.6	72	0.014	96	95	10.2	0.11	0.68		123.52	181.75	177.60	57.99	181.51	158	69	69	68		1.001	5.681	703
1126	180.964	182.441		0.16	0.16	1.32	1.04	0.23	79	79	68	2.05	1.6	72	0.014	96	95	10.3	-0.10	0.67		123.44	181.44	177.26	57.68	181.11	155	69	69	68		1.001	5.574	689
1127	181.124	182.600		0.16	0.16	1.31	1.04	0.23	79	79	68	2.06	1.6	72	0.016	89	88	10.3	-0.07	0.62		123.65	181.40	177.55	57.46	181.11	153	69	69	68		1.001	5.195	643
1128	181.284	182.761		0.16	0.16	1.32	1.04	0.23	79	79	68	2.05	1.6	72	0.014	96	95	10.3	0.07	0.58		123.87	181.24	177.49	57.12	180.99	151	69	69	68		1.001	4.841	600
1129	181.444	182.921		0.16	0.16	1.32	1.04	0.23	79	79	68	2.06	1.6	72	0.014	96	95	10.3	-0.09	0.68		123.87	181.04	177.18	56.95	180.83	150	69	69	68		1.001	5.644	700
1130	181.604	183.080		0.16	0.16	1.32	1.04	0.23	79	79	67	2.05	1.6	71	0.015	92	91	10.3	0.09	0.60		123.83	180.85	177.01	56.84	180.67	148	69	69	67		1.001	5.032	624
1131	181.764	183.241		0.16	0.16	1.32	1.04	0.23	79	79	68	2.06	1.6	71	0.015	92	92	10.5	-0.23	0.60		123.59	180.67	176.85	56.79	180.38	146	69	69	68		1.001	5.031	622
1132	181.924	183.400		0.16	0.16	1.33	1.04	0.23	79	79	67	2.06	1.6	71	0.015	92	91	10.3	0.21	0.64		123.51	180.51	176.78	56.78	180.29	144	69	69	67		1.001	5.359	663
1133	182.085	183.560		0.16	0.16	1.33	1.04	0.23	79	79	67	2.06	1.6	71	0.015	93	92	10.3	0.01	0.62		123.31	180.15	176.28	56.66	179.96	142	69	69	67		1.001	5.196	642
1134	182.245	183.720		0.16	0.16	1.33	1.04	0.23	79	79	67	2.06	1.6	71	0.012	103	102	10.2	0.09	0.64		123.00	179.90	175.92	56.59	179.59	140	69	69	67		1.001	5.361	660
1135	182.405	183.881		0.16	0.16	1.32	1.04	0.23	80	79	67	2.06	1.6	71	0.016	89	89	10.2	0.01	0.64		122.70	179.48	175.56	56.51	179.21	138	69	69	67		1.001	5.362	659
1136	182.565	184.040		0.16	0.16	1.33	1.04	0.23	80	79	67	2.07	1.6	70	0.014	95	94	10.2	-0.06	0.66		122.58	179.30	175.35	56.45	179.03	136	69	69	67		1.001	5.522	678
1137	182.726	184.200		0.16	0.16	1.32	1.03	0.23	80	79	67	2.07	1.6	81	0.015	94	92	10.2	0.03	0.66		122.51	179.07	175.13	56.34	178.86	178	70	70	67		1.001	5.518	677
1138	182.886	184.358		0.16	0.16	1.33	1.03	0.23	80	79	67	2.05	1.6	77	0.014	96	94	10.1	0.15	0.62		122.30	178.84	174.92	56.31	178.61	179	69	70	67		1.001	5.203	637
1139	183.047	184.518		0.16	0.16	1.33	1.06	0.23	80	79	67	2.02	1.6	72	0.013	100	98	10.0	0.01	0.62		122.15	178.62	174.71	56.22	178.37	163	68	69	67		1.001	5.199	636
1140	183.208	184.680		0.16	0.16	1.34	1.06	0.23	80	79	66	2.04	1.6	70	0.015	93	93	9.9	0.19	0.62		122.07	178.46	174.61	56.17	178.24	154	68	69	66		1.001	5.202	636
1141	183.369	184.841		0.16	0.16	1.34	1.05	0.23	80	79	66	2.02	1.6	70	0.015	93	92	10.0	-0.11	0.64		121.88	178.26	174.38	56.15	178.03	148	68	69	66		1.001	5.360	654
1142	183.530	185.002		0.16	0.16	1.34	1.06	0.23	80	79	66	2.03	1.6	70	0.015	93	92	9.9	0.11	0.66		121.61	177.99	174.15	56.17	177.78	143	68	69	66		1.001	5.479	667
1143	183.691	185.163		0.16	0.16	1.34	1.06	0.23	80	79	66	2.01	1.6	70	0.014	96	95	9.8	0.02	0.66		121.39	177.78	173.89	56.18	177.57	140	68	68	66		1.001	5.491	667
1144	183.852	185.325		0.16	0.16	1.33	1.06	0.23	80	79	66	2.03	1.6	69	0.013	99	99	9.9	-0.04	0.62		120.98	177.38	173.49	56.22	177.21	137	68	68	66		1.001	5.207	631
1145	184.013	185.486		0.16	0.16	1.34	1.06	0.23	80	79	67	2.04	1.6	69	0.014	96	95	10.0	-0.11	0.66		120.70	177.13	173.22	56.26	176.97	135	68	68	67		1.001	5.531	668
1146	184.174	185.647		0.16	0.16	1.34	1.06	0.23	80	79	67	2.03	1.6	69	0.014	96	95	9.9	0.06	0.62		120.36	176.85	172.95	56.30	176.66	133	68	68	67		1.001	5.207	627

Elapsed Time	Particulate Sampling Data																	Fuel Weight, lb		Flow, gpm		Temperature Data, oF												
	Gas Meter Cubic Feet (1)	Gas Meter Cubic Feet (2)	Gas Meter Cubic Feet (amb)	Sample Rate, cfm (1)	Sample Rate, cfm (2)	Orifice dH (1)	Orifice dH (2)	Orifice dH (amb)	Meter oF (1)	Meter oF (2)	Meter oF (amb)	Meter Vac. In. Hg. (1)	Meter Vac. In. Hg. (2)	Dilution Tunnel Temp.	Dilution Tunnel dP	Pro. Rate (%) (1)	Pro. Rate (%) (2)	Scale Reading	Weight Change	Load Side Liquid Flow Rate	Boiler Side Liquid Flow Rate (optional)	Thermopile ΔT	Boiler to Heat Exch. Temp.	Heat Exch to Boiler Temp.	Inlet Load Temp.	Outlet Load Temp.	Stack	Filter (1)	Filter (2)	Ambient		Specific Heat of Inlet Water (BTU/lb-°F)	Mass Flow Rate of Inlet Water (lb/min)	Heat Output, Btu
1147	184.335	185.808		0.16	0.16	1.33	1.06	0.23	80	79	66	2.03	1.6	69	0.014	96	95	9.8	0.12	0.62		120.11	176.58	172.75	56.32	176.43	132	68	68	66		1.001	5.200	625
1148	184.497	185.970		0.16	0.16	1.33	1.06	0.23	80	79	66	2.03	1.6	69	0.014	96	96	9.9	-0.07	0.66		119.87	176.40	172.56	56.31	176.18	130	68	68	66		1.001	5.529	664
1149	184.658	186.131		0.16	0.16	1.33	1.06	0.23	80	79	66	2.02	1.6	69	0.013	99	99	9.9	-0.07	0.62		119.60	176.13	172.28	56.27	175.88	128	68	68	66		1.001	5.207	624
1150	184.819	186.292		0.16	0.16	1.33	1.06	0.23	80	79	66	2.02	1.6	69	0.015	93	92	10.1	-0.12	0.62		119.44	175.98	172.15	56.25	175.69	126	68	68	66		1.001	5.207	623
1151	184.980	186.454		0.16	0.16	1.33	1.06	0.23	79	79	66	2.03	1.6	69	0.015	93	92	9.9	0.16	0.66		119.29	175.77	171.90	56.20	175.48	125	68	68	66		1.001	5.526	660
1152	185.141	186.616		0.16	0.16	1.33	1.06	0.23	80	79	66	2.01	1.6	69	0.015	93	92	9.9	0.03	0.64		119.00	175.34	171.68	56.15	175.16	123	68	68	66		1.001	5.369	640
1153	185.303	186.777		0.16	0.16	1.33	1.06	0.23	79	79	66	2.02	1.6	69	0.014	97	95	10.0	-0.16	0.62		118.82	175.24	171.47	56.10	174.92	122	67	68	66		1.001	5.207	619
1154	185.464	186.938		0.16	0.16	1.33	1.06	0.23	79	79	66	2.01	1.6	69	0.014	96	95	10.0	0.08	0.64		118.55	174.84	171.07	56.12	174.67	121	67	67	66		1.001	5.359	636
1155	185.625	187.101		0.16	0.16	1.34	1.06	0.23	79	79	66	2.03	1.6	69	0.013	100	100	9.9	0.08	0.61		118.12	174.42	170.62	56.09	174.20	120	67	67	66		1.001	5.063	599
1156	185.786	187.262		0.16	0.16	1.33	1.06	0.23	79	79	66	2.04	1.6	69	0.014	96	95	9.9	0.01	0.66		117.84	174.16	170.37	56.10	173.93	119	67	67	66		1.001	5.535	653
1157	185.947	187.423		0.16	0.16	1.34	1.06	0.23	79	79	66	2.02	1.6	69	0.014	96	95	10.0	-0.09	0.64		117.47	173.91	170.13	56.13	173.59	117	67	67	66		1.001	5.368	631
1158	186.109	187.584		0.16	0.16	1.33	1.06	0.23	79	79	66	2.03	1.6	70	0.014	97	95	10.1	-0.12	0.64		117.24	173.73	170.21	56.18	173.42	116	67	67	66		1.001	5.367	630
1159	186.270	187.747		0.16	0.16	1.34	1.06	0.23	79	79	65	2.02	1.6	69	0.014	96	96	9.9	0.13	0.62		117.01	173.49	169.80	56.26	173.27	116	67	67	65		1.001	5.202	609
1160	186.431	187.908		0.16	0.16	1.34	1.06	0.23	79	79	65	2.03	1.6	69	0.015	93	92	9.9	0.03	0.68		116.52	173.22	169.56	56.44	172.97	114	67	67	65		1.001	5.689	664
1161	186.592	188.069		0.16	0.16	1.34	1.06	0.23	79	79	66	2.02	1.6	69	0.014	96	95	10.0	-0.14	0.62		115.94	172.92	169.27	56.67	172.61	113	67	67	66		1.001	5.202	604
1162	186.754	188.230		0.16	0.16	1.34	1.06	0.23	79	78	66	2.02	1.6	69	0.012	104	103	10.0	0.05	0.64		115.45	172.65	168.98	56.90	172.35	112	67	67	66		1.001	5.367	620
1163	186.915	188.393		0.16	0.16	1.34	1.06	0.23	79	78	66	2.03	1.6	69	0.014	96	96	10.0	-0.04	0.62		115.05	172.41	168.83	57.08	172.13	111	67	67	66		1.001	5.206	600
1164	187.076	188.554		0.16	0.16	1.34	1.06	0.23	79	78	66	2.02	1.6	69	0.015	93	92	10.0	0.02	0.62		114.63	172.07	168.49	57.28	171.91	110	67	67	66		1.001	5.201	597
1165	187.237	188.715		0.16	0.16	1.34	1.06	0.23	79	78	66	2.03	1.6	69	0.014	96	95	10.1	-0.09	0.62		114.17	171.85	168.33	57.44	171.62	109	67	67	66		1.001	5.203	595
1166	187.399	188.877		0.16	0.16	1.34	1.06	0.23	79	78	66	2.03	1.6	70	0.015	93	93	10.0	0.05	0.62		113.67	171.57	167.98	57.58	171.24	108	67	67	66		1.001	5.197	591
1167	187.560	189.038		0.16	0.16	1.34	1.06	0.23	79	78	66	2.02	1.6	70	0.015	93	92	10.1	-0.02	0.62		113.24	171.11	167.61	57.70	170.94	107	67	67	66		1.001	5.197	589
1168	187.721	189.199		0.16	0.16	1.33	1.06	0.23	79	78	66	2.03	1.6	72	0.014	96	96	9.9	0.16	0.66		112.82	170.85	167.37	57.80	170.62	134	67	67	66		1.001	5.520	624
1169	187.882	189.360		0.16	0.16	1.33	1.05	0.23	79	78	66	2.05	1.6	77	0.014	97	96	10.0	-0.12	0.62		112.41	170.60	167.08	57.88	170.29	161	67	68	66		1.001	5.195	585
1170	188.043	189.521		0.16	0.16	1.34	1.06	0.23	79	78	66	2.02	1.6	73	0.015	93	92	9.8	0.21	0.61		112.17	170.34	166.88	57.93	170.10	144	67	67	66		1.001	5.065	569
1171	188.204	189.682		0.16	0.16	1.34	1.06	0.23	79	78	67	2.02	1.6	71	0.015	93	92	9.8	0.04	0.64		111.93	170.14	166.69	57.98	169.91	132	67	67	67		1.001	5.369	602
1172	188.365	189.843		0.16	0.16	1.34	1.06	0.23	79	78	66	2.02	1.6	71	0.014	96	95	9.8	-0.04	0.60		111.55	169.93	166.44	58.08	169.63	125	67	67	66		1.001	5.034	562
1173	188.526	190.004		0.16	0.16	1.34	1.06	0.23	79	78	66	2.03	1.6	71	0.013	100	99	10.0	-0.14	0.68		111.23	169.57	166.16	58.16	169.40	120	67	67	66		1.001	5.685	633
1174	188.687	190.166		0.16	0.16	1.34	1.06	0.23	79	78	67	2.03	1.6	71	0.014	96	96	9.9	0.08	0.62		110.83	169.31	165.91	58.24	169.06	118	67	68	67		1.001	5.193	576
1175	188.849	190.327		0.16	0.16	1.34	1.06	0.23	79	78	67	2.03	1.6	71	0.014	97	95	9.9	0.01	0.62		110.54	169.02	165.62	58.30	168.84	115	67	68	67		1.001	5.195	575
1176	189.010	190.489		0.16	0.16	1.35	1.06	0.23	79	78	67	2.03	1.6	71	0.014	96	96	10.0	-0.13	0.60		110.18	168.82	165.36	58.38	168.56	113	67	68	67		1.001	5.029	555
1177	189.171	190.650		0.16	0.16	1.34	1.06	0.23	79	78	67	2.02	1.6	72	0.014	96	96	10.0	0.05	0.64		109.88	168.54	165.18	58.43	168.31	111	67	68	67		1.001	5.354	589
1178	189.332	190.812		0.16	0.16	1.34	1.06	0.23	79	78	67	2.03	1.6	72	0.014	96	96	9.9	0.07	0.62		109.55	168.25	164.89	58.47	168.02	111	67	68	67		1.001	5.196	570
1179	189.494	190.972		0.16	0.16	1.34	1.06	0.23	79	78	67	2.03	1.6	72	0.013	100	99	9.9	-0.03	0.64		109.21	167.96	164.62	58.52	167.73	109	68	68	67		1.001	5.354	585
1180	189.655	191.134		0.16	0.16	1.34	1.06	0.23	79	78	67	2.03	1.6	72	0.015	93	93	9.9	-0.01	0.64		108.86	167.69	164.34	58.56	167.41	108	68	68	67		1.001	5.355	584
1181	189.816	191.296		0.16	0.16	1.34	1.06	0.23	79	78	67	2.03	1.6	72	0.014	96	96	9.8	0.11	0.66		108.68	167.54	164.21	58.58	167.26	107	68	68	67		1.001	5.521	601
1182	189.977	191.457		0.16	0.16	1.35	1.06	0.23	79	78	67	2.04	1.6	72	0.013	100	99	10.0	-0.19	0.61		108.37	167.18	163.87	58.63	167.00	106	68	68	67		1.001	5.043	547
1183	190.139	191.618		0.16	0.16	1.35	1.06	0.23	79	78	67	2.02	1.6	72	0.015	94	92	9.9	0.16	0.62		108.03	166.98	163.67	58.64	166.67	105	68	68	67		1.001	5.194	562
1184	190.300	191.779		0.16	0.16	1.34	1.06	0.23	79	78	67	2.03	1.6	72	0.013	100	99	10.0	-0.10	0.63		107.77	166.61	163.29	58.64	166.41	104	68	68	67		1.001	5.243	566
1185	190.461	191.941		0.16	0.16	1.34	1.06	0.23	79	79	67	2.03	1.6	72	0.014	96	96	9.9	0.03	0.67		107.46	166.32	163.02	58.63	166.09	104	68	68	67		1.001	5.612	604
1186	190.622	192.102		0.16	0.16	1.34	1.05	0.23	79	78	68	2.02	1.6	72	0.015	93	92	9.8	0.10	0.58		107.18	166.10	163.06	58.61	165.79	103	68	68	68		1.001	4.868	522
1187	190.783	192.263		0.16	0.16	1.34	1.06	0.23	79	79	67	2.03	1.6	72	0.013	100	99	10.0	-0.19	0.64		107.05	165.86	162.93	58.61	165.66	102	68	68	67		1.001	5.347	573
1188	190.944	192.425		0.16	0.16	1.34	1.06	0.23	79	79	67	2.01	1.6	72	0.014	96	96	9.9	0.10	0.62		106.79	165.60	162.38	58.63	165.42	101	68	68	67		1.001	5.191	555
1189	191.105	192.586		0.16	0.16	1.34	1.05	0.23	79	79	67	2.03	1.6	72	0.013	100	99	9.9	0.03	0.64		106.45	165.35	162.17	58.67	165.12	100	68	68	67		1.001	5.350	570
1190	191.266	192.746		0.16	0.16	1.34	1.06	0.23	79	79	68	2.02	1.6	73	0.013	100	98	9.9	-0.05	0.62		106.12	165.09	162.03	58.71	164.83	100	68	68	68		1.001	5.191	551
1191	191.428	192.908		0.16	0.16	1.34	1.06	0.23	79	79	68	2.03	1.6	72	0.014	97	96	10.0	-0.06	0.62		105.84	164.79	161.81	58.77	164.61	100	68	68	68		1.001	5.188	550
1192	191.589	193.070		0.16	0.16	1.34	1.05	0.23	79	79	68	2.01	1.6	73	0.014	96	96	10.0	0.02	0.60		105.51	164.52	161.53	58.85	164.36	99	68	68	68		1.001	5.030	531
1193	191.750	193.230		0.16	0.16	1.34	1.06	0.23	79	79	68	2.01	1.6	73	0.014	96	95	10.0	-0.04	0.58		105.10	164.29	161.12	58.94	164.04	98	68	68	68		1.001	4.863	512
1194	191.911	193.391		0.16	0.16	1.34	1.06	0.23	79	79	68	2.02	1.6	73	0.014	96	95	9.9	0.11	0.58		104.79	164.05	161.07	59.04	163.83	98	68	68	68		1.001	4.867	511
1195	192.072	193.553		0.16	0.16	1.34	1.06	0.23	79	79	68	2.03	1.6	73	0.013	100	100	9.9	-0.04	0.60		104.44	163.70	160.59	59.13	163.57	97	68	69	68		1.001	5.025	525
1196	192.234	193.714		0.16	0.16	1.34	1.06	0.23	79	79	68	2.02	1.6	73	0.014	97	95	10.0	-0.04	0.58		104.01	163.47	160.32	59.22	163.24	96	68	69	68		1.001	4.861	506
1197	192.395	193.875		0.16	0.16	1.34	1.06	0.23	79	79	68	2.02	1.6	73	0.014	96	95	9.9	0.07	0.62		103.65	163.19	160.06	59.31	162.96	96	68	69	68		1.001	5.188	538
1198	192.556	194.036		0.16	0.16	1.34	1.06	0.23	79	79	68	2.03	1.6	73	0.013	100	99	10.0	-0.08	0.64		103.33	162.89	159.78	59.35	162.68	96	68	69	68		1.001	5.322	551
1199	192.717	194.198		0.16	0.16	1.34	1.06	0.23	79	79	68	2.02	1.6	73	0.013	100	100	9.9	0.06	0.58		103.12	162.68	159.57	59.38	162.50	95	68	69	68		1.001	4.864	502
1200	192.878	194.359		0.16	0.16	1.34	1.05	0.23	80	79	68	2.04	1.6	75	0.014	96	96	10.0	-0.06	0.64		102.83	162.40	159.29	59.39	162.22	129	69	69	68		1.001	5.346	550
1201	193.039	194.519		0.16	0.16	1.34	1.06	0.23	79	79	68	2.04	1.6	76	0.014	97	95	10.0	0.02	0.66		102.50	162.05	158.89	59.34	161.84	135	69	69	68		1.001	5.510	565
1202	193.200	194.681		0.16	0.16	1.33	1.05	0.23	79	79	68	2.03	1.6	74	0.015	93	93	9.8	0.18	0.64		102.26	161.77	158.67	59.30	161.56	127	69	69	68		1.001	5.351	548
1203	193.361	194.842		0.16	0.16	1.34	1.05	0.23	80	79	68	2.04	1.6	77	0.014	97	96	9.9	-0.08	0.64		101.90	161.49	157.91	59.26	161.16	148	69	69	68		1.001	5.348	546
1204	193.521	195.003		0.16	0.16	1.33	1.06	0.23	80	79	68	2.04	1.6	79	0.014	96	96	9.8	0.11	0.80		101.82	161.13	157.04	59.15	160.97	158	69	69	68		1.001	6.646	678
1205	193.683	195.164		0.16	0.16	1.33	1.06	0.23	80	79	68	2.02	1.6	79	0.014	97	96	9.7	0.08	0.76		101.62	160.58	156.36	58.88	160.51	168	69	70	68		1.001	6.326	644
1206	193.844	195.326		0.16	0.16	1.33	1.06	0.23	80	79	68	2.03	1.6	81	0.014	97	97	9.5	0.21	0.76		101.65	160.27	156.02	58.48	160.13	180	69	70	68		1.001	6.327	644
1207	194.004	195.487		0.16	0.16	1.33	1.05	0.23	80	79	67	2.03	1.6	84	0.015	93	93	9.3	0.13	0.80		101.71	160.05	155.78	58.14	159.85	192	69	70	67		1.001	6.656	678

Elapsed Time	Particulate Sampling Data																	Fuel Weight, lb		Flow, gpm		Temperature Data, oF												
	Gas Meter Cubic Feet (1)	Gas Meter Cubic Feet (2)	Gas Meter Cubic Feet (amb)	Sample Rate, cfm (1)	Sample Rate, cfm (2)	Orifice dH (1)	Orifice dH (2)	Orifice dH (amb)	Meter oF (1)	Meter oF (2)	Meter oF (amb)	Meter Vac. in. Hg. (1)	Meter Vac. in. Hg. (2)	Dilution Tunnel Temp.	Dilution Tunnel dP	Pro. Rate (%) (1)	Pro. Rate (%) (2)	Scale Reading	Weight Change	Load Side Liquid Flow Rate	Boiler Side Liquid Flow Rate (optional)	Thermopile ΔT	Boiler to Heat Exch. Temp.	Heat Exch to Boiler Temp.	Inlet Load Temp.	Outlet Load Temp.	Stack	Filter (1)	Filter (2)	Ambient		Specific Heat of Inlet Water (BTU/lb-°F)	Mass Flow Rate of Inlet Water (lb/min)	Heat Output, Btu
1208	194.165	195.647		0.16	0.16	1.33	1.06	0.23	80	79	67	2.04	1.6	86	0.014	97	96	9.1	0.25	0.82		101.91	159.97	155.70	57.86	159.78	206	70	70	67		1.001	6.819	696
1209	194.326	195.808		0.16	0.16	1.33	1.06	0.23	80	79	67	2.04	1.6	88	0.013	101	100	8.7	0.36	0.74		102.19	160.10	155.81	57.68	159.87	218	70	70	67		1.001	6.178	632
1210	194.487	195.969		0.16	0.16	1.33	1.06	0.23	80	79	66	2.04	1.6	89	0.013	101	101	8.6	0.16	0.79		102.31	160.12	155.78	57.54	159.86	228	70	70	66		1.001	6.610	677
1211	194.647	196.129		0.16	0.16	1.34	1.06	0.23	80	79	66	2.04	1.6	91	0.014	97	96	8.3	0.31	0.75		102.58	160.26	156.01	57.46	160.04	237	70	71	66		1.001	6.215	638
1212	194.808	196.290		0.16	0.16	1.33	1.05	0.23	80	79	67	2.05	1.6	92	0.015	95	94	8.2	0.08	0.77		102.93	160.64	156.30	57.40	160.33	245	70	71	67		1.001	6.436	663
1213	194.969	196.452		0.16	0.16	1.33	1.05	0.23	80	79	67	2.04	1.6	93	0.015	95	95	7.9	0.23	0.76		103.35	161.17	156.80	57.41	160.77	252	70	71	67		1.001	6.342	656
1214	195.129	196.611		0.16	0.16	1.33	1.05	0.23	80	79	67	2.04	1.6	94	0.014	97	96	7.6	0.33	0.74		103.69	161.56	157.21	57.54	161.23	258	71	71	67		1.001	6.167	640
1215	195.290	196.771		0.16	0.16	1.33	1.05	0.23	80	79	68	2.06	1.6	95	0.014	98	97	7.4	0.18	0.76		104.19	162.08	157.74	57.48	161.67	264	71	72	68		1.001	6.328	660
1216	195.450	196.932		0.16	0.16	1.33	1.04	0.23	80	79	68	2.04	1.6	95	0.014	98	97	7.1	0.29	0.74		104.73	162.71	158.37	57.58	162.31	269	71	72	68		1.001	6.167	647
1217	195.611	197.091		0.16	0.16	1.34	1.04	0.23	80	79	68	2.07	1.6	96	0.014	98	96	6.9	0.29	0.78		105.35	163.45	159.06	57.66	163.01	274	71	72	68		1.001	6.485	684
1218	195.771	197.250		0.16	0.16	1.33	1.07	0.23	80	79	68	2.05	1.7	97	0.014	98	96	6.6	0.25	0.80		105.87	164.02	159.72	57.75	163.62	277	72	72	68		1.001	6.648	705
1219	195.931	197.412		0.16	0.16	1.33	1.06	0.23	80	79	68	2.06	1.7	98	0.014	98	98	6.3	0.32	0.72		106.52	164.76	160.81	57.80	164.32	285	72	73	68		1.001	5.997	640
1220	196.091	197.573		0.16	0.16	1.33	1.05	0.23	80	79	68	2.07	1.7	98	0.014	98	98	5.9	0.33	0.70		107.37	165.78	161.94	57.88	165.25	291	72	73	68		1.001	5.835	627
1221	196.251	197.733		0.16	0.16	1.33	1.05	0.23	80	79	68	2.08	1.7	99	0.014	98	97	5.5	0.46	0.68		108.22	166.64	162.70	58.01	166.23	295	72	73	68		1.001	5.675	615
1222	196.411	197.893		0.16	0.16	1.33	1.05	0.23	80	79	68	2.08	1.7	100	0.016	92	91	5.2	0.25	0.72		108.83	167.34	163.35	58.08	166.90	299	72	73	68		1.001	5.995	653
1223	196.572	198.054		0.16	0.16	1.32	1.04	0.23	80	79	68	2.09	1.7	100	0.014	99	98	5.0	0.26	0.72		109.70	168.30	164.23	58.11	167.81	302	73	74	68		1.001	5.996	659
1224	196.731	198.213		0.16	0.16	1.32	1.04	0.23	80	79	68	2.08	1.7	101	0.014	97	97	4.6	0.39	0.74		110.47	169.04	165.05	58.13	168.60	307	73	74	68		1.001	6.161	681
1225	196.890	198.372		0.16	0.16	1.32	1.04	0.23	80	79	68	2.08	1.7	102	0.014	98	97	4.3	0.32	0.72		111.35	170.06	165.93	58.18	169.53	312	73	74	68		1.001	5.970	666
1226	197.050	198.531		0.16	0.16	1.31	1.03	0.23	80	79	68	2.09	1.8	103	0.014	98	97	3.9	0.33	0.70		112.22	170.86	166.77	58.22	170.44	316	73	74	68		1.001	5.855	658
1227	197.209	198.689		0.16	0.16	1.31	1.03	0.23	80	79	68	2.11	1.8	103	0.014	98	96	3.6	0.38	0.68		113.14	171.88	167.70	58.22	171.36	319	73	74	68		1.001	5.628	638
1228	197.368	198.848		0.16	0.16	1.31	1.02	0.23	80	79	68	2.11	1.8	103	0.014	98	97	3.3	0.26	0.64		114.28	173.08	169.12	58.19	172.47	320	74	75	68		1.001	5.345	612
1229	197.527	199.005		0.16	0.16	1.31	1.01	0.23	80	79	68	2.12	1.8	104	0.014	98	96	3.2	0.11	0.70		115.29	173.96	169.72	58.21	173.50	322	74	75	68		1.001	5.834	673
1230	197.686	199.163		0.16	0.16	1.31	1.01	0.23	80	79	69	2.11	1.8	104	0.014	98	96	2.8	0.42	0.70		116.26	174.97	170.75	58.25	174.51	324.19862	74	75	69		1.001	5.835	679
1231	197.844	199.319		0.16	0.16	1.31	1.00	0.23	80	79	69	2.13	1.8	105	0.013	101	99	2.4	0.36	0.68		117.12	175.97	171.59	58.26	175.39	325.07034	74	75	69		1.001	5.669	665
1232	198.003	199.476		0.16	0.16	1.30	1.00	0.23	80	79	68	2.12	1.8	106	0.015	95	93	2.0	0.44	0.72		118.07	176.82	172.54	58.28	176.34	325.0741	74	75	68		1.001	5.991	708
1233	198.162	199.632		0.16	0.16	1.30	0.99	0.23	80	79	69	2.12	1.9	106	0.014	98	95	1.6	0.33	0.70		119.08	177.84	173.47	58.24	177.32	324.94702	75	76	69		1.001	5.833	695
1234	198.320	199.787		0.16	0.16	1.29	0.99	0.23	80	79	69	2.15	1.9	105	0.015	94	91	1.3	0.32	0.72		120.33	178.94	174.53	58.04	178.37	324.45944	75	76	69		1.001	5.993	722
1235	198.478	199.942		0.16	0.16	1.30	0.97	0.23	80	79	69	2.14	1.9	104	0.015	94	91	1.2	0.13	0.70		121.56	179.70	175.35	57.71	179.27	323.69818	75	76	69		1.001	5.836	710
1236	198.636	200.097		0.16	0.16	1.29	0.97	0.23	80	79	69	2.15	1.9	105	0.015	94	91	0.8	0.43	0.74		122.57	180.53	176.07	57.42	180.00	324.3952	75	76	69		1.001	6.156	755
1237	198.794	200.249		0.16	0.15	1.29	0.96	0.23	80	79	69	2.14	1.9	105	0.016	91	87	0.0	0.73	0.66		123.78	181.53	177.14	57.19	180.96	324.42712	75	76	69		1.001	5.507	682
1238	198.951	200.404	267.379	0.16	0.16	1.30	0.97	0.23	80	80	69	2.15	1.9	102	0.015	93	91	0.0	-0.02	0.68		124.82	182.46	177.90	57.02	181.84	315.40915	75	76	69		1.001	5.673	709
	198.951	200.404	267.379			1.33	1.07	0.23	79	78	67			78	0.013					0.58	#DIV/0!	114.8	174.1	170.6	58.8	173.7		69.21	69.59		#DIV/0!			559
																																	TOTAL:	692320

TF_{avg} 180.177

TI_{avg} 168.292

OMNI-Test Laboratories

Manufacturer: Central Boiler
Model: Edge 360
Date: 12/11/19
Run: 3
Control #: 0117WB040E
Test Duration: 1238
Output Category: II

Technicians: _____

_____

_____

Test Results in Accordance with CSA B415.1-09

	HHV Basis	LHV Basis
Overall Efficiency	75.9%	81.8%
Combustion Efficiency	94.8%	94.8%
Heat Transfer Efficiency	80%	86.3%

Output Rate (kJ/h)	33,423	31,705	**(Btu/h)**
Burn Rate (kg/h)	2.21	4.88	**(lb/h)**
Input (kJ/h)	44,016	41,753	**(Btu/h)**

Test Load Weight (dry kg)	45.67	100.65	**dry lb**
MC wet (%)	18.17		
MC dry (%)	22.20		
Particulate (g)	39.33		
CO (g)	3,641		
Test Duration (h)	20.63		

Emissions	**Particulate**	**CO**
g/MJ Output	0.06	5.28
g/kg Dry Fuel	0.86	79.73
g/h	1.91	176.46
lb/MM Btu Output	0.13	12.27

Air/Fuel Ratio (A/F)	22.96

VERSION: 2.2 12/14/2009

VERSION: 2.2 12/14/2009

Manufacturer: Central Boiler
Model: Edge 360
Date: 12/11/2019
Run: 3
Control #: 0117WB040E
Test Duration: 1238
Input Category: II

Appliance Type: Non-Cat (Cat, Non

Temp. Units F (F or C)
Weight Units lb (kg or lb)

Wood Moisture (% wet):	18.17			
Load Weight (lb wet):	123.00			
Burn Rate (dry kg/h):	2.21			
Total Particulate Emissions:	39.33 g			

Fuel Data

	Oak	
HHV	19,887	kj/kg
%C	50	
%H	6.6	
%O	42.9	
%ASH	0.5	

	Averages	**0.51**	**4.82**	**#DIV/0!**	**180.24**	**66.75**
					Temp. (ºF)	
Elapsed Time (min)	**Fuel Weight Remaining (lb)**	**Flue Gas Composition (%) CO**	**CO_2**	**O_2**	**Flue Gas**	**Room Temp**
0	123.0	0.1	17.4		320	67
1	122.6	1.0	6.4		295	67
2	122.0	1.0	6.4		317	67
3	121.5	0.1	17.7		330	67
4	121.1	0.1	16.9		337	67
5	120.4	0.1	16.9		342	67
6	119.7	0.1	17.2		346	67
7	119.3	0.1	17.1		350	67
8	118.9	0.1	17.3		354	67
9	118.4	0.1	17.2		358	67
10	117.9	0.1	17.3		361	66
11	117.3	0.1	17.1		364	66
12	117.1	0.1	16.9		367	66
13	116.5	0.1	16.7		370	66
14	116.3	0.1	16.9		340	66
15	116.1	0.0	11.6		311	66
16	116.1	0.1	6.5		294	67
17	116.0	0.1	4.6		280	66
18	116.0	0.1	4.3		269	67
19	116.1	0.1	3.5		260	67
20	115.9	0.1	3.1		252	67
21	116.0	0.1	2.8		245	67

22	115.9	0.1	2.6		239	67
23	116.0	0.1	2.4		233	67
24	116.0	0.1	2.3		227	67
25	115.9	0.1	2.2		223	67
26	115.9	0.1	2.1		220	67
27	116.0	0.1	1.5		216	67
28	115.9	0.1	1.0		212	67
29	116.1	0.0	0.7		208	67
30	116.1	0.0	0.7		204	66
31	116.0	0.1	0.9		199	67
32	115.9	0.1	1.1		196	67
33	116.0	0.1	1.2		192	67
34	116.0	0.1	1.3		189	66
35	116.1	0.1	1.3		185	66
36	116.1	0.1	1.3		181	66
37	116.2	0.1	1.3		178	66
38	116.0	0.1	1.4		175	66
39	116.0	0.1	1.7		172	66
40	116.0	0.2	2.0		169	66
41	116.2	0.2	2.1		166	66
42	116.0	0.2	2.2		164	66
43	116.0	0.2	2.3		161	66
44	116.0	0.2	2.7		159	66
45	116.0	0.2	2.5		156	66
46	116.2	0.2	2.5		154	66
47	116.1	0.2	2.5		151	66
48	116.2	0.2	2.4		149	66
49	116.0	0.2	2.3		147	66
50	116.1	0.2	2.3		145	66
51	116.1	0.2	2.3		143	67
52	116.2	0.2	2.3		141	67
53	116.2	0.2	2.3		139	67
54	116.2	0.2	2.4		138	67
55	116.1	0.2	2.3		136	67
56	116.1	0.2	2.3		163	67
57	115.9	0.9	5.6		196	67
58	116.0	2.3	6.9		174	67
59	115.9	1.8	5.6		161	67
60	115.9	1.5	4.9		153	67
61	115.9	1.4	4.9		147	67
62	116.0	1.3	4.7		142	67
63	115.9	1.2	4.5		139	67

64	116.0	1.1	4.3		137	67
65	116.0	1.0	4.1		135	67
66	116.0	1.0	3.9		133	67
67	115.9	0.9	3.8		131	67
68	115.9	0.9	3.6		129	67
69	115.9	0.8	3.4		128	67
70	116.0	0.7	3.2		126	67
71	116.0	0.7	2.9		125	67
72	115.9	0.6	2.8		123	68
73	115.9	0.6	2.7		122	68
74	115.9	0.6	2.5		121	67
75	115.9	0.5	2.4		120	67
76	115.9	0.5	2.1		119	67
77	115.9	0.5	2.1		118	68
78	115.9	0.5	2.1		116	68
79	116.0	0.4	1.9		116	68
80	115.9	0.4	1.9		114	68
81	116.0	0.4	1.8		113	68
82	115.9	0.4	1.8		112	68
83	115.8	0.3	1.6		112	68
84	116.0	0.3	1.5		111	67
85	116.0	0.3	1.6		110	68
86	115.9	0.3	1.5		109	68
87	115.8	0.3	1.5		109	68
88	115.9	0.3	1.5		159	68
89	115.7	0.7	3.8		164	68
90	115.8	1.6	5.0		146	68
91	115.7	1.4	4.4		135	68
92	115.7	1.3	4.2		129	68
93	115.7	1.1	4.0		125	68
94	115.8	1.0	3.8		121	68
95	115.6	0.9	3.6		119	68
96	115.7	0.8	3.4		117	68
97	115.8	0.8	3.1		116	68
98	115.7	0.7	2.9		115	68
99	115.7	0.7	2.8		113	68
100	115.8	0.6	2.6		112	68
101	115.8	0.6	2.4		111	68
102	115.7	0.5	2.3		110	68
103	115.7	0.5	2.1		109	68
104	115.7	0.4	1.9		108	68
105	115.7	0.4	1.9		107	68

106	115.6	0.4	1.7		107	68
107	115.7	0.3	1.6		105	68
108	115.7	0.3	1.5		105	68
109	115.8	0.3	1.4		104	68
110	115.6	0.3	1.4		103	68
111	115.7	0.3	1.3		102	68
112	115.8	0.3	1.3		102	68
113	115.7	0.2	1.1		101	68
114	115.8	0.2	1.1		100	68
115	115.7	0.2	1.1		100	68
116	115.7	0.2	1.1		100	68
117	115.7	0.2	1.0		99	68
118	115.7	0.2	1.0		98	68
119	115.5	0.2	0.9		128	68
120	115.6	0.8	6.0		149	68
121	115.5	1.2	5.0		137	68
122	115.5	1.2	4.4		125	68
123	115.5	1.0	3.9		118	67
124	115.4	0.9	3.4		113	67
125	115.5	0.8	3.1		110	67
126	115.4	0.7	2.8		108	67
127	115.5	0.7	2.6		106	67
128	115.4	0.6	2.4		105	67
129	115.3	0.5	2.3		104	67
130	115.2	0.6	2.4		148	66
131	114.7	1.8	7.0		188	66
132	114.3	2.3	11.1		228	66
133	113.8	1.0	17.4		256	66
134	113.3	1.1	16.8		282	66
135	112.9	0.3	18.4		303	66
136	112.3	0.2	18.2		316	66
137	111.7	0.2	17.7		326	66
138	111.1	0.2	17.3		335	66
139	110.6	0.2	17.1		342	66
140	110.1	0.2	16.7		347	66
141	109.5	0.1	16.3		350	66
142	109.0	0.2	15.6		354	66
143	108.6	0.2	15.1		356	66
144	108.0	0.2	14.7		358	66
145	107.6	0.2	14.4		359	67
146	106.9	0.2	14.1		360	67
147	106.5	0.4	13.6		360	67

148	106.1	0.8	13.0		360	67
149	105.6	0.8	12.8		361	67
150	105.0	1.0	12.5		360	67
151	104.6	1.3	11.9		359	67
152	104.2	1.3	11.7		358	67
153	103.6	1.1	11.9		360	67
154	103.2	0.6	12.8		362	67
155	102.7	1.0	12.1		361	67
156	102.2	1.4	11.5		361	67
157	101.9	1.0	12.3		335	68
158	101.6	0.5	9.9		308	67
159	101.5	0.5	10.0		292	68
160	101.4	0.5	8.6		279	67
161	101.3	0.4	8.1		269	67
162	101.4	0.6	5.9		259	67
163	101.3	0.6	4.5		251	67
164	101.2	0.6	3.7		244	67
165	101.4	0.6	3.2		238	67
166	101.1	0.6	2.7		232	67
167	101.2	0.5	2.5		227	67
168	101.1	0.5	2.4		222	67
169	101.1	0.4	2.4		219	68
170	101.1	0.3	1.8		216	67
171	101.3	0.2	1.1		213	68
172	101.1	0.2	1.0		208	67
173	101.1	0.2	1.3		204	68
174	101.2	0.2	1.4		201	68
175	101.1	0.3	1.8		197	68
176	101.2	0.3	2.0		193	68
177	101.1	0.4	2.4		189	68
178	101.1	0.4	2.7		186	68
179	101.0	0.4	3.0		183	68
180	101.1	0.5	3.3		179	68
181	101.2	0.5	3.4		176	68
182	101.0	0.5	3.4		173	68
183	101.0	0.5	3.5		170	68
184	101.1	0.5	3.6		168	68
185	101.1	0.5	3.5		165	68
186	101.0	0.5	3.6		162	68
187	101.0	0.5	3.7		160	68
188	101.1	0.5	3.9		158	68
189	101.1	0.5	3.8		156	68

190	101.1	0.5	3.9		153	68
191	101.2	0.5	3.9		151	68
192	101.1	0.5	4.1		149	68
193	101.1	0.5	4.1		147	68
194	101.2	0.5	4.0		145	69
195	101.1	0.5	4.0		143	68
196	101.1	0.5	4.0		141	68
197	101.2	0.5	4.1		140	68
198	101.2	0.5	4.1		138	68
199	101.1	0.5	4.1		162	68
200	100.8	0.4	4.2		188	68
201	100.7	0.5	2.7		171	68
202	100.7	0.5	2.3		160	68
203	100.7	0.4	2.1		152	68
204	100.6	0.4	2.2		147	68
205	100.8	0.3	2.3		143	68
206	100.5	0.3	2.3		140	67
207	100.7	0.3	2.3		138	67
208	100.6	0.3	2.5		136	67
209	100.6	0.3	2.4		134	67
210	100.6	0.3	2.4		132	67
211	100.6	0.3	2.4		131	67
212	100.6	0.3	2.4		129	67
213	100.6	0.3	2.4		128	67
214	100.8	0.2	2.2		126	67
215	100.7	0.2	2.4		125	66
216	100.6	0.2	2.3		124	66
217	100.7	0.2	2.3		123	66
218	100.7	0.2	2.3		121	66
219	100.7	0.2	2.2		120	66
220	100.5	0.2	2.2		119	66
221	100.6	0.2	2.2		118	66
222	100.6	0.2	2.2		117	66
223	100.6	0.2	2.2		116	66
224	100.7	0.2	2.2		115	66
225	100.7	0.2	2.2		114	66
226	100.8	0.2	2.2		114	66
227	100.6	0.2	2.1		113	66
228	100.6	0.2	2.1		112	66
229	100.7	0.2	2.1		111	66
230	100.8	0.2	2.1		110	67
231	100.5	0.2	2.0		143	67

232	100.5	0.2	1.9		148	67
233	100.5	0.4	2.0		136	66
234	100.5	0.3	1.7		128	67
235	100.5	0.2	1.4		123	67
236	100.4	0.2	1.4		119	67
237	100.6	0.2	1.3		116	67
238	100.6	0.2	1.4		115	67
239	100.5	0.2	1.5		113	67
240	100.4	0.2	1.5		112	67
241	100.5	0.2	1.6		112	67
242	100.3	0.2	1.6		110	67
243	100.3	0.2	1.6		109	67
244	100.4	0.2	1.7		109	67
245	100.4	0.2	1.7		107	67
246	100.4	0.2	1.6		107	67
247	100.5	0.2	1.6		106	67
248	100.5	0.2	1.7		106	67
249	100.4	0.2	1.7		106	67
250	100.4	0.2	1.8		105	67
251	100.5	0.2	1.8		105	67
252	100.4	0.2	1.7		104	67
253	100.5	0.2	1.8		103	67
254	100.5	0.2	1.8		102	68
255	100.3	0.2	1.8		102	67
256	100.3	0.2	1.9		102	68
257	100.5	0.2	1.8		101	68
258	100.5	0.2	1.8		102	68
259	100.4	0.2	1.9		102	68
260	100.6	0.2	2.0		101	68
261	100.5	0.2	1.9		99	68
262	100.3	0.2	1.9		135	68
263	100.4	0.4	4.2		134	68
264	100.3	0.1	0.8		129	68
265	100.1	0.0	0.5		122	67
266	100.3	0.0	0.4		117	68
267	100.3	0.0	0.4		113	68
268	100.1	0.0	0.4		132	68
269	100.1	0.2	1.7		149	68
270	99.8	0.6	1.8		161	68
271	99.7	0.9	2.7		170	68
272	99.5	1.3	4.0		178	67
273	99.4	1.5	5.1		190	67

274	99.1	1.1	5.3		199	67
275	98.7	1.2	5.9		206	68
276	98.5	1.3	6.5		213	67
277	98.2	1.5	6.9		218	67
278	97.9	1.7	7.3		224	67
279	97.4	2.2	8.0		231	67
280	97.1	2.3	8.8		240	67
281	96.7	2.3	9.4		248	67
282	96.2	2.5	9.7		257	67
283	95.9	2.0	11.0		268	66
284	95.4	1.9	11.9		279	67
285	95.0	1.6	12.4		289	66
286	94.4	1.3	12.2		299	66
287	94.1	0.9	12.8		309	66
288	93.7	0.6	13.5		318	66
289	93.0	0.6	13.4		326	66
290	92.7	0.4	13.6		333	66
291	92.2	0.4	14.0		340	66
292	91.7	0.1	14.8		347	66
293	91.1	0.1	15.4		354	66
294	90.6	0.1	15.5		360	66
295	90.0	0.1	15.5		363	66
296	89.4	0.1	15.0		366	66
297	88.8	0.1	15.2		369	69
298	88.5	0.1	15.1		371	67
299	88.0	0.1	14.5		372	67
300	87.4	0.1	14.4		373	67
301	87.0	0.1	14.6		375	67
302	86.4	0.1	15.1		373	67
303	86.0	0.1	14.6		374	67
304	85.7	0.1	14.6		344	67
305	85.6	0.2	12.2		316	66
306	85.4	0.1	12.3		299	66
307	85.1	0.3	11.1		285	66
308	85.2	0.2	10.3		274	66
309	85.1	0.5	7.7		264	66
310	85.0	0.8	5.3		256	66
311	85.1	0.3	1.9		248	66
312	84.9	0.5	2.4		241	66
313	84.9	0.7	3.0		235	66
314	84.8	0.5	2.8		230	66
315	84.9	0.5	2.6		225	66

316	84.9	0.4	2.5		222	65
317	84.9	0.3	1.8		219	66
318	84.7	0.2	1.3		215	66
319	84.8	0.2	1.4		211	66
320	84.7	0.3	1.8		207	66
321	84.8	0.3	2.2		202	66
322	84.9	0.3	2.4		198	66
323	84.7	0.4	2.7		195	66
324	84.8	0.4	2.9		191	66
325	84.8	0.5	3.3		188	67
326	84.8	0.5	3.3		184	67
327	84.8	0.4	3.3		181	67
328	84.8	0.5	3.5		178	66
329	84.9	0.5	3.5		174	67
330	84.8	0.4	3.3		171	66
331	84.8	0.4	3.4		168	66
332	84.8	0.4	3.4		166	66
333	84.8	0.4	3.3		163	66
334	84.8	0.4	3.2		161	66
335	84.7	0.4	3.3		158	66
336	84.9	0.4	3.1		156	66
337	84.7	0.4	3.1		154	66
338	84.8	0.4	3.1		152	66
339	84.8	0.4	3.1		149	66
340	84.8	0.4	3.1		147	65
341	85.0	0.3	3.0		146	66
342	84.8	0.3	3.0		143	65
343	84.9	0.3	2.9		141	66
344	84.8	0.3	2.8		140	66
345	84.9	0.3	2.8		138	66
346	84.8	0.3	2.8		163	66
347	84.4	0.3	3.0		188	66
348	84.5	0.4	2.1		171	66
349	84.4	0.3	1.7		159	66
350	84.5	0.3	1.6		152	66
351	84.5	0.3	1.7		147	66
352	84.5	0.2	1.7		143	66
353	84.4	0.2	1.8		140	66
354	84.5	0.2	1.9		137	66
355	84.5	0.2	1.9		136	66
356	84.5	0.2	2.0		133	66
357	84.4	0.2	1.9		132	66

358	84.4	0.2	2.0		130	66
359	84.4	0.2	1.9		129	66
360	84.4	0.2	1.9		127	66
361	84.4	0.2	1.9		126	67
362	84.5	0.2	1.8		125	66
363	84.4	0.2	1.9		123	67
364	84.3	0.2	1.9		122	67
365	84.5	0.2	1.8		121	67
366	84.4	0.2	1.8		120	67
367	84.5	0.2	1.8		119	67
368	84.4	0.2	1.8		118	67
369	84.6	0.1	1.8		118	67
370	84.6	0.1	1.8		117	67
371	84.5	0.1	1.8		115	67
372	84.4	0.1	1.8		115	67
373	84.5	0.1	1.7		114	67
374	84.5	0.1	1.7		114	67
375	84.6	0.1	1.7		113	67
376	84.6	0.1	1.7		112	67
377	84.5	0.1	1.7		110	67
378	84.3	0.1	1.6		144	67
379	84.3	0.1	1.2		148	68
380	84.2	0.1	1.0		135	68
381	84.3	0.1	0.8		127	68
382	84.3	0.1	0.7		122	68
383	84.2	0.1	0.7		119	68
384	84.3	0.1	0.7		116	68
385	84.3	0.1	0.8		115	67
386	84.2	0.1	0.9		113	67
387	84.2	0.1	0.9		112	67
388	84.2	0.1	1.0		111	67
389	84.3	0.1	1.0		110	67
390	84.2	0.1	1.1		109	67
391	84.2	0.1	1.1		108	67
392	84.4	0.1	1.2		108	67
393	84.2	0.1	1.3		107	66
394	84.2	0.1	1.3		106	67
395	84.1	0.1	1.3		106	67
396	84.2	0.1	1.4		105	66
397	84.3	0.1	1.4		105	67
398	84.2	0.1	1.4		104	67
399	84.2	0.1	1.4		103	67

400	84.1	0.1	1.4		103	66
401	84.2	0.1	1.4		103	66
402	84.2	0.1	1.4		102	66
403	84.2	0.1	1.5		102	66
404	84.1	0.1	1.5		102	66
405	84.3	0.1	1.5		101	66
406	84.2	0.1	1.5		101	66
407	84.3	0.1	1.5		102	66
408	84.4	0.1	1.4		100	66
409	84.2	0.1	1.4		134	66
410	84.1	0.3	3.3		137	66
411	84.2	0.0	0.6		129	66
412	84.1	0.0	0.3		121	66
413	84.1	0.0	0.3		115	66
414	84.1	0.0	0.2		111	66
415	83.9	0.0	0.2		109	66
416	84.0	0.0	0.2		106	66
417	84.0	0.0	0.2		105	66
418	84.0	0.0	0.3		103	66
419	84.1	0.0	0.3		102	66
420	84.1	0.0	0.3		102	66
421	84.1	0.0	0.3		101	66
422	84.1	0.0	0.3		100	66
423	84.1	0.0	0.3		100	66
424	84.0	0.0	0.3		99	66
425	84.1	0.0	0.3		98	66
426	84.0	0.0	0.4		97	66
427	84.1	0.0	0.4		97	66
428	84.1	0.0	0.4		97	66
429	84.0	0.0	0.4		96	67
430	84.1	0.0	0.4		96	67
431	84.1	0.0	0.4		96	67
432	84.1	0.0	0.4		95	67
433	84.1	0.0	0.4		95	67
434	84.0	0.0	0.5		95	67
435	84.1	0.0	0.5		104	67
436	84.1	0.1	0.7		130	67
437	83.8	0.2	0.7		147	67
438	83.7	0.4	1.0		157	67
439	83.7	0.7	1.5		166	67
440	83.5	1.2	2.9		175	67
441	83.3	1.6	4.3		184	67

442	83.2	1.8	5.5		196	67
443	83.1	1.6	5.5		206	67
444	82.8	1.7	6.7		216	67
445	82.3	1.8	7.5		225	67
446	82.1	1.7	8.2		235	67
447	81.6	1.4	9.1		245	67
448	81.4	1.3	9.8		253	67
449	80.9	1.3	10.3		261	67
450	80.6	1.2	10.9		271	67
451	80.1	1.1	11.5		280	67
452	80.0	1.0	11.6		288	67
453	79.3	0.8	12.0		296	67
454	78.9	0.7	12.1		302	66
455	78.5	0.7	12.3		307	66
456	78.0	0.7	12.0		311	67
457	77.6	0.6	12.2		316	66
458	77.3	0.5	12.7		322	66
459	76.8	0.4	13.0		327	66
460	76.3	0.3	13.6		331	66
461	75.8	0.4	13.1		334	66
462	75.2	0.5	12.9		337	66
463	74.9	0.5	12.8		339	66
464	74.5	0.5	12.8		341	66
465	74.0	0.5	12.9		343	66
466	73.6	0.5	12.9		345	66
467	73.0	0.6	12.8		347	66
468	72.6	0.6	12.6		349	66
469	72.2	0.6	12.2		351	66
470	71.8	0.6	12.1		352	66
471	71.2	0.7	11.9		353	66
472	70.9	0.7	12.0		327	66
473	70.8	0.4	11.6		301	66
474	70.5	0.3	13.1		286	66
475	70.5	0.7	13.0		274	66
476	70.3	0.6	13.2		263	66
477	70.3	0.6	11.8		254	66
478	70.1	1.1	7.3		246	65
479	70.2	1.2	4.4		239	66
480	70.1	1.0	3.6		233	65
481	70.0	0.9	3.2		227	66
482	69.9	0.8	3.0		222	65
483	69.9	0.7	2.8		217	65

484	69.9	0.6	2.7		214	66
485	69.9	0.5	2.0		211	65
486	69.9	0.3	1.4		208	65
487	69.9	0.4	1.6		203	65
488	69.9	0.4	1.9		199	65
489	69.8	0.5	2.2		195	65
490	69.8	0.6	2.7		191	65
491	69.8	0.6	2.8		188	65
492	69.9	0.6	2.9		185	65
493	70.0	0.7	3.1		181	65
494	69.8	0.6	3.1		177	65
495	69.8	0.7	3.2		174	65
496	69.7	0.7	3.2		171	65
497	69.9	0.7	3.2		169	65
498	70.0	0.7	3.1		166	65
499	69.9	0.7	3.1		163	65
500	69.9	0.6	3.0		160	65
501	69.9	0.6	3.0		157	65
502	70.0	0.6	3.0		155	65
503	69.9	0.6	2.9		153	65
504	69.9	0.7	3.0		151	65
505	69.9	0.6	2.9		149	65
506	69.8	0.6	2.8		147	65
507	69.9	0.6	2.8		145	66
508	69.8	0.6	2.7		143	66
509	70.1	0.6	2.7		141	66
510	70.0	0.6	2.8		139	66
511	69.9	0.6	2.8		137	66
512	70.0	0.6	2.7		135	66
513	69.8	0.6	2.7		134	66
514	69.9	0.6	2.7		159	66
515	69.5	0.9	4.4		181	66
516	69.4	0.2	1.3		166	66
517	69.5	0.1	1.1		155	66
518	69.6	0.1	1.1		148	66
519	69.7	0.1	1.2		143	66
520	69.6	0.1	1.2		139	66
521	69.5	0.1	1.3		137	66
522	69.5	0.2	1.3		134	66
523	69.5	0.1	1.3		132	66
524	69.5	0.1	1.3		130	66
525	69.6	0.1	1.3		129	66

526	69.4	0.1	1.3		127	66
527	69.4	0.1	1.3		125	66
528	69.6	0.1	1.3		124	66
529	69.5	0.1	1.3		123	66
530	69.5	0.1	1.3		122	66
531	69.6	0.1	1.3		121	66
532	69.6	0.1	1.3		119	66
533	69.5	0.1	1.3		119	66
534	69.5	0.1	1.3		118	67
535	69.4	0.1	1.3		117	67
536	69.5	0.1	1.3		116	67
537	69.5	0.1	1.3		115	67
538	69.5	0.1	1.3		114	67
539	69.6	0.1	1.3		113	67
540	69.6	0.1	1.3		112	67
541	69.5	0.1	1.3		111	67
542	69.5	0.1	1.3		111	67
543	69.6	0.1	1.3		110	67
544	69.5	0.1	1.3		109	67
545	69.5	0.1	1.3		109	67
546	69.4	0.1	1.3		142	67
547	69.4	0.1	1.1		146	67
548	69.3	0.0	0.4		134	67
549	69.2	0.0	0.3		127	67
550	69.4	0.0	0.3		122	67
551	69.3	0.0	0.3		118	67
552	69.3	0.0	0.3		115	67
553	69.3	0.0	0.3		114	67
554	69.3	0.0	0.3		112	67
555	69.2	0.0	0.3		111	67
556	69.1	0.0	0.4		110	67
557	69.2	0.0	0.4		110	67
558	69.2	0.0	0.4		108	67
559	69.2	0.0	0.4		108	67
560	69.3	0.0	0.4		108	67
561	69.2	0.0	0.4		106	67
562	69.2	0.0	0.4		106	67
563	69.2	0.0	0.5		105	67
564	69.2	0.0	0.5		105	67
565	69.4	0.1	0.5		105	67
566	69.3	0.1	0.5		103	67
567	69.2	0.1	0.5		103	67

568	69.3	0.1	0.5		103	67
569	69.2	0.1	0.5		102	68
570	69.3	0.1	0.5		101	67
571	69.2	0.1	0.6		100	67
572	69.3	0.1	0.6		101	67
573	69.3	0.1	0.6		99	68
574	69.2	0.1	0.6		100	67
575	69.3	0.1	0.6		100	68
576	69.3	0.1	0.6		99	68
577	69.2	0.1	0.6		133	68
578	69.2	0.2	1.8		134	68
579	69.1	0.0	0.4		128	67
580	69.1	0.0	0.2		120	68
581	69.0	0.0	0.2		115	68
582	69.1	0.0	0.2		111	68
583	69.2	0.0	0.2		108	68
584	69.1	0.0	0.2		107	68
585	69.1	0.0	0.2		105	68
586	69.1	0.0	0.2		103	68
587	69.1	0.0	0.2		103	68
588	69.2	0.0	0.2		101	68
589	69.2	0.0	0.2		101	68
590	69.2	0.0	0.2		100	68
591	69.0	0.0	0.2		100	68
592	69.2	0.0	0.2		99	68
593	69.0	0.0	0.2		98	68
594	69.1	0.0	0.2		97	68
595	69.1	0.0	0.3		97	69
596	69.2	0.0	0.3		97	68
597	69.0	0.0	0.3		123	68
598	69.1	0.1	0.5		141	68
599	69.0	0.0	0.2		149	68
600	69.0	0.0	0.1		153	68
601	68.9	0.0	0.1		155	68
602	68.9	0.0	0.1		157	68
603	68.9	0.0	0.1		158	68
604	68.8	0.0	0.2		159	67
605	68.9	0.1	0.3		159	67
606	68.7	0.2	0.5		160	67
607	68.8	0.3	0.8		162	67
608	68.7	0.4	1.3		165	67
609	68.6	0.6	2.3		169	67

610	68.2	0.9	3.7		176	67
611	68.0	1.4	6.3		185	67
612	67.9	1.9	8.2		198	67
613	67.5	1.7	7.4		209	67
614	67.3	1.9	7.8		220	67
615	67.1	2.0	8.3		229	66
616	66.5	2.2	8.9		240	66
617	66.3	2.2	9.8		251	66
618	65.9	2.2	10.7		261	66
619	65.5	2.4	11.3		271	66
620	65.0	2.2	11.9		282	66
621	64.7	1.8	12.5		291	66
622	64.3	1.4	12.8		300	66
623	63.8	1.0	13.5		311	66
624	63.4	0.5	14.3		320	66
625	62.8	0.4	14.2		326	66
626	62.3	0.4	13.8		330	66
627	61.9	0.5	13.7		333	66
628	61.4	0.4	13.6		336	66
629	60.9	0.4	13.3		338	66
630	60.5	0.5	13.0		340	66
631	60.1	0.7	12.8		342	66
632	59.5	0.6	12.7		344	66
633	59.2	0.5	13.3		345	66
634	58.6	1.0	12.3		344	66
635	58.2	1.2	11.7		342	66
636	57.9	1.2	11.6		341	66
637	57.3	1.3	11.5		340	66
638	57.0	1.3	11.3		339	67
639	56.5	1.3	11.1		339	67
640	56.1	1.4	11.0		338	67
641	55.6	1.5	10.8		338	67
642	55.2	1.5	10.6		338	67
643	54.8	1.4	10.5		337	67
644	54.4	1.2	10.3		336	67
645	54.0	1.4	10.3		336	67
646	53.7	1.3	10.2		336	67
647	53.3	1.3	10.0		312	67
648	53.1	0.7	9.3		291	67
649	53.0	0.4	11.9		277	67
650	52.7	0.7	12.3		266	67
651	52.7	0.6	13.2		258	67

652	52.5	0.5	11.9		249	68
653	52.5	0.7	8.9		242	67
654	52.4	1.0	6.5		235	67
655	52.4	1.0	4.7		229	67
656	52.5	1.0	3.5		224	68
657	52.4	0.9	3.1		220	68
658	52.2	0.9	2.9		215	67
659	52.3	0.8	2.7		212	67
660	52.3	0.5	2.0		208	67
661	52.1	0.4	1.4		205	67
662	52.2	0.5	1.8		201	67
663	52.3	0.7	2.6		197	67
664	52.2	0.9	3.3		193	67
665	52.2	1.0	3.8		190	67
666	52.2	1.1	4.0		186	67
667	52.3	1.1	4.2		183	67
668	52.2	1.2	4.5		180	66
669	52.2	1.3	4.9		177	66
670	52.1	1.3	4.9		174	66
671	52.2	1.3	4.9		171	66
672	52.2	1.3	5.0		168	66
673	52.3	1.2	4.9		165	66
674	52.2	1.2	4.8		163	66
675	52.2	1.3	5.1		160	66
676	52.1	1.2	4.9		158	66
677	52.3	1.2	4.8		155	67
678	52.3	1.2	4.8		153	67
679	52.1	1.2	4.9		151	66
680	52.2	1.2	4.8		149	66
681	52.2	1.1	4.6		147	66
682	52.2	1.1	4.7		145	67
683	52.2	1.1	4.6		143	67
684	52.3	1.1	4.6		141	66
685	52.3	1.1	4.6		140	66
686	52.3	1.0	4.4		138	67
687	52.3	1.0	4.5		137	66
688	52.2	1.0	4.3		135	66
689	52.1	1.0	4.4		158	66
690	51.9	0.7	3.9		178	67
691	51.9	0.1	1.0		163	67
692	51.8	0.1	0.8		152	67
693	51.9	0.1	0.8		146	67

694	51.8	0.1	0.8		141	67
695	51.8	0.1	0.9		138	67
696	51.9	0.1	1.0		136	67
697	51.7	0.1	1.1		134	67
698	51.7	0.1	1.2		132	67
699	51.9	0.1	1.2		130	67
700	51.8	0.1	1.2		128	67
701	51.9	0.2	1.3		127	69
702	51.8	0.2	1.3		126	68
703	51.8	0.2	1.3		125	68
704	51.8	0.2	1.4		124	68
705	51.7	0.2	1.4		122	67
706	51.7	0.2	1.4		121	68
707	51.9	0.2	1.4		120	68
708	51.7	0.2	1.4		119	68
709	51.9	0.2	1.5		119	68
710	51.8	0.2	1.5		118	67
711	51.8	0.2	1.5		117	67
712	51.9	0.2	1.5		117	67
713	51.8	0.2	1.5		115	67
714	51.9	0.2	1.5		115	67
715	52.0	0.2	1.5		114	67
716	51.8	0.2	1.5		113	67
717	51.9	0.2	1.4		114	67
718	51.8	0.2	1.5		112	66
719	52.0	0.2	1.5		112	67
720	51.7	0.2	1.5		111	67
721	51.7	0.2	1.6		139	67
722	51.8	0.2	2.1		143	67
723	51.8	0.0	0.4		132	66
724	51.6	0.0	0.3		125	66
725	51.5	0.0	0.3		120	66
726	51.7	0.0	0.3		117	66
727	51.5	0.0	0.3		114	66
728	51.8	0.0	0.3		113	66
729	51.7	0.0	0.3		111	66
730	51.8	0.0	0.3		110	66
731	51.6	0.0	0.3		110	66
732	51.8	0.0	0.4		108	66
733	51.7	0.0	0.4		108	66
734	51.8	0.0	0.4		107	66
735	51.6	0.1	0.4		107	66

736	51.6	0.1	0.5		105	66
737	51.6	0.1	0.4		104	66
738	51.6	0.1	0.5		103	66
739	51.6	0.1	0.5		103	66
740	51.6	0.1	0.5		103	66
741	51.7	0.1	0.5		102	66
742	51.7	0.1	0.5		102	66
743	51.9	0.1	0.5		101	65
744	51.7	0.1	0.5		101	65
745	51.8	0.1	0.6		99	65
746	51.7	0.1	0.6		100	65
747	51.6	0.1	0.6		99	65
748	51.7	0.1	0.6		99	65
749	51.5	0.1	0.6		99	65
750	51.7	0.1	0.6		98	65
751	51.7	0.1	0.6		97	66
752	51.7	0.1	0.6		132	65
753	51.6	0.2	1.4		131	65
754	51.6	0.0	0.3		125	65
755	51.6	0.0	0.2		118	65
756	51.7	0.0	0.2		113	65
757	51.6	0.0	0.2		109	65
758	51.6	0.0	0.2		107	65
759	51.7	0.0	0.2		105	65
760	51.6	0.0	0.2		103	65
761	51.6	0.0	0.2		101	65
762	51.7	0.0	0.2		101	65
763	51.7	0.0	0.2		100	65
764	51.6	0.0	0.2		99	65
765	51.7	0.0	0.2		121	65
766	51.5	0.1	0.7		136	65
767	51.5	0.0	0.2		147	65
768	51.5	0.0	0.2		152	65
769	51.4	0.0	0.2		155	65
770	51.5	0.0	0.2		157	66
771	51.4	0.1	0.3		158	66
772	51.4	0.3	0.5		160	66
773	51.3	0.4	0.8		161	66
774	51.2	0.5	1.2		162	66
775	51.2	0.5	1.7		164	66
776	51.1	0.6	2.2		166	66
777	50.9	0.7	2.8		168	66

778	50.9	0.9	3.9		172	66
779	50.7	1.2	5.1		177	66
780	50.5	1.4	6.3		184	66
781	50.4	1.5	7.4		191	66
782	50.1	1.1	6.4		200	66
783	49.9	1.2	6.7		208	66
784	49.7	1.2	7.1		214	66
785	49.5	1.2	7.6		223	66
786	49.0	1.2	9.8		237	66
787	48.8	1.1	10.8		251	66
788	48.3	1.0	12.2		266	66
789	47.8	0.6	13.2		280	66
790	47.3	0.5	13.4		292	66
791	46.9	0.2	15.4		307	66
792	46.5	0.1	16.0		320	67
793	45.8	0.1	16.2		330	67
794	45.1	0.1	16.1		339	67
795	44.7	0.1	16.6		348	66
796	44.0	0.1	16.6		354	67
797	43.5	0.1	16.0		357	67
798	43.1	0.1	16.0		360	67
799	42.5	0.1	15.9		364	67
800	42.0	0.1	15.9		367	67
801	41.3	0.1	15.7		369	67
802	40.7	0.1	15.3		370	67
803	40.3	0.1	15.4		371	67
804	39.8	0.1	15.4		373	67
805	39.2	0.1	15.5		374	67
806	38.7	0.1	15.3		375	67
807	38.4	0.1	15.0		341	67
808	37.8	0.9	17.1		314	67
809	37.8	0.6	17.2		297	66
810	37.6	2.1	18.1		284	66
811	37.6	1.0	17.1		273	67
812	37.3	0.4	15.4		263	67
813	37.4	0.2	13.4		255	67
814	37.2	0.2	12.6		248	67
815	37.1	0.3	11.3		242	67
816	37.1	0.5	8.8		235	67
817	37.1	0.8	6.2		230	67
818	37.0	0.7	4.8		225	67
819	37.0	0.8	3.4		223	67

820	37.0	0.5	2.1		219	67
821	36.9	0.5	1.8		215	67
822	36.9	0.8	2.5		211	67
823	36.9	1.0	3.3		207	68
824	36.9	1.3	4.0		203	68
825	37.0	1.5	4.6		199	67
826	36.9	1.7	5.1		196	68
827	37.0	1.8	5.6		192	68
828	36.8	2.1	6.4		188	68
829	36.9	1.4	4.5		185	68
830	36.9	2.2	6.6		182	68
831	36.8	2.2	6.7		178	68
832	36.9	2.2	6.9		175	68
833	36.8	2.1	6.7		173	68
834	36.8	2.1	6.8		170	68
835	36.8	2.1	7.0		167	68
836	36.9	2.0	6.7		165	68
837	36.9	2.0	6.8		162	68
838	36.8	2.0	6.6		160	68
839	36.9	1.9	6.5		158	68
840	36.8	1.9	6.7		156	68
841	36.9	1.8	6.4		153	68
842	36.8	1.7	6.0		151	68
843	36.8	1.6	5.9		150	68
844	36.8	1.6	5.9		148	68
845	36.8	1.6	5.8		146	68
846	36.8	1.5	5.7		144	68
847	36.9	1.5	5.6		143	68
848	36.8	1.4	5.7		141	68
849	36.9	1.3	5.2		164	68
850	36.5	0.4	2.4		183	68
851	36.5	0.3	1.8		167	68
852	36.5	0.2	1.5		157	68
853	36.5	0.2	1.5		150	68
854	36.4	0.2	1.5		146	68
855	36.4	0.2	1.6		142	68
856	36.5	0.2	1.8		140	68
857	36.4	0.3	1.9		137	68
858	36.3	0.3	1.9		136	68
859	36.4	0.3	2.2		134	68
860	36.5	0.3	2.1		132	68
861	36.6	0.3	2.2		131	68

862	36.4	0.3	2.2		130	67
863	36.4	0.3	2.2		129	67
864	36.4	0.3	2.2		127	67
865	36.4	0.3	2.3		126	67
866	36.4	0.3	2.4		124	67
867	36.4	0.3	2.3		123	67
868	36.5	0.3	2.4		123	67
869	36.5	0.3	2.3		122	67
870	36.4	0.3	2.4		121	67
871	36.4	0.3	2.4		120	67
872	36.4	0.3	2.3		119	67
873	36.3	0.3	2.3		118	67
874	36.5	0.3	2.2		116	67
875	36.4	0.3	2.2		116	67
876	36.5	0.3	2.3		116	67
877	36.4	0.2	2.1		115	67
878	36.4	0.2	2.2		114	67
879	36.4	0.3	2.2		113	66
880	36.4	0.2	2.2		116	66
881	36.5	0.4	3.5		145	66
882	36.2	0.1	0.7		146	66
883	36.2	0.0	0.5		133	66
884	36.2	0.0	0.4		125	66
885	36.2	0.0	0.4		120	66
886	36.3	0.0	0.4		117	66
887	36.2	0.0	0.5		115	66
888	36.2	0.1	0.5		113	66
889	36.1	0.1	0.6		112	66
890	36.2	0.1	0.7		111	66
891	36.2	0.1	0.8		109	66
892	36.2	0.1	0.9		109	66
893	36.3	0.1	1.0		108	65
894	36.3	0.1	1.0		107	66
895	36.2	0.1	1.1		106	65
896	36.0	0.1	1.2		106	66
897	36.2	0.1	1.3		104	65
898	36.2	0.1	1.3		103	65
899	36.3	0.1	1.3		103	65
900	36.3	0.1	1.3		102	65
901	36.3	0.2	1.4		102	65
902	36.3	0.2	1.4		102	65
903	36.3	0.2	1.4		101	65

904	36.3	0.2	1.5		100	65
905	36.2	0.2	1.5		100	65
906	36.2	0.2	1.5		99	65
907	36.2	0.2	1.5		99	65
908	36.3	0.2	1.5		98	65
909	36.3	0.2	1.5		98	65
910	36.2	0.2	1.6		97	65
911	36.3	0.2	1.6		96	65
912	36.2	0.2	1.5		130	65
913	36.0	0.2	1.9		136	66
914	36.2	0.0	0.6		126	65
915	36.2	0.0	0.5		142	65
916	36.1	0.1	0.7		154	66
917	35.9	0.4	1.3		162	65
918	35.9	0.8	2.4		170	66
919	35.8	1.3	4.0		179	66
920	35.5	1.5	4.8		193	66
921	35.3	1.6	6.0		205	66
922	35.0	1.5	7.3		217	66
923	34.6	1.4	8.5		233	66
924	34.2	0.1	15.6		257	66
925	33.7	0.1	16.7		279	66
926	33.4	0.1	16.6		296	66
927	32.8	0.1	16.7		311	66
928	32.7	0.1	16.9		322	66
929	31.9	0.1	17.3		332	66
930	31.3	0.1	17.6		340	66
931	31.0	0.1	18.0		348	66
932	30.3	0.1	17.6		353	66
933	29.9	0.1	17.9		358	66
934	29.4	0.1	17.9		363	67
935	28.8	0.1	17.9		367	67
936	28.2	0.1	17.9		370	67
937	27.8	0.1	17.7		373	67
938	27.3	0.1	17.7		373	67
939	26.7	0.0	17.4		376	67
940	26.2	0.1	17.1		376	67
941	25.7	0.0	16.9		375	67
942	25.1	0.1	17.1		377	67
943	24.6	0.0	16.7		377	67
944	24.3	0.0	16.4		380	67
945	23.9	0.0	16.3		355	67

946	23.8	0.1	14.3		323	68
947	23.3	0.2	15.7		304	67
948	23.3	0.8	17.4		290	67
949	23.0	0.6	17.3		278	67
950	23.1	0.3	15.5		268	67
951	22.9	0.1	13.6		259	68
952	22.8	0.1	12.1		252	67
953	22.7	0.1	10.6		245	67
954	22.6	0.2	8.9		239	68
955	22.7	0.2	7.7		233	68
956	22.6	0.3	6.8		228	68
957	22.7	0.3	6.0		225	68
958	22.5	0.2	4.1		222	68
959	22.5	0.3	3.4		218	68
960	22.6	0.7	4.2		214	68
961	22.3	1.1	4.9		209	68
962	22.5	1.3	5.4		205	68
963	22.3	1.6	6.1		201	68
964	22.4	1.8	6.4		197	68
965	22.4	1.9	6.8		194	68
966	22.4	2.0	7.0		190	68
967	22.4	2.0	7.0		187	68
968	22.3	2.0	6.8		183	68
969	22.4	2.0	6.7		180	68
970	22.5	2.0	6.8		177	68
971	22.4	1.9	6.6		174	68
972	22.3	1.8	6.3		171	68
973	22.4	1.7	6.0		169	68
974	22.5	1.7	5.8		166	68
975	22.4	1.6	5.6		164	68
976	22.4	1.6	5.7		161	68
977	22.5	1.5	5.3		159	68
978	22.3	1.4	5.2		156	68
979	22.4	1.4	5.2		154	68
980	22.4	1.4	5.2		152	68
981	22.4	1.4	5.0		150	68
982	22.3	1.3	4.8		148	67
983	22.5	1.2	4.7		146	67
984	22.4	1.2	4.7		144	67
985	22.5	1.2	4.5		142	67
986	22.5	1.1	4.2		141	67
987	22.4	1.1	4.4		159	67

988	22.0	0.9	4.8		188	67
989	22.2	0.7	3.5		175	67
990	22.2	0.6	2.9		163	67
991	22.1	0.5	2.7		154	66
992	22.2	0.5	2.6		149	67
993	22.1	0.4	2.6		145	66
994	22.0	0.4	2.6		142	66
995	22.2	0.4	2.5		139	66
996	22.1	0.4	2.5		137	67
997	22.1	0.4	2.5		134	66
998	22.2	0.4	2.4		133	66
999	22.2	0.3	2.3		131	66
1000	22.2	0.3	2.3		130	66
1001	22.1	0.3	2.3		128	67
1002	21.9	0.3	2.2		127	66
1003	22.1	0.3	2.1		125	66
1004	22.2	0.3	2.1		124	66
1005	22.1	0.3	2.1		123	66
1006	22.1	0.3	2.2		121	66
1007	22.1	0.3	2.1		120	66
1008	22.1	0.3	2.1		119	66
1009	22.2	0.3	2.0		118	66
1010	22.1	0.2	1.9		117	66
1011	22.1	0.2	2.0		116	66
1012	22.1	0.2	1.9		115	66
1013	22.1	0.2	1.9		114	66
1014	22.1	0.2	1.8		113	66
1015	22.3	0.2	1.9		112	66
1016	22.1	0.2	1.8		111	66
1017	22.1	0.2	1.8		110	66
1018	22.2	0.2	1.8		110	66
1019	22.1	0.2	1.9		147	66
1020	22.0	0.2	2.0		162	66
1021	22.1	0.4	2.0		144	66
1022	22.0	0.3	1.7		132	66
1023	21.9	0.3	1.5		126	66
1024	22.0	0.3	1.5		121	66
1025	22.0	0.2	1.4		118	67
1026	22.0	0.2	1.3		116	67
1027	22.0	0.2	1.3		115	67
1028	22.0	0.2	1.2		113	67
1029	22.0	0.2	1.3		112	67

1030	21.9	0.2	1.2		111	67
1031	22.0	0.2	1.2		109	67
1032	22.0	0.2	1.2		109	67
1033	21.9	0.2	1.3		108	67
1034	22.0	0.2	1.3		107	67
1035	22.0	0.2	1.3		106	67
1036	22.1	0.2	1.4		105	67
1037	22.0	0.2	1.5		104	67
1038	21.9	0.2	1.5		104	67
1039	22.0	0.2	1.5		103	67
1040	22.0	0.2	1.6		102	67
1041	22.0	0.2	1.5		102	66
1042	22.0	0.2	1.7		101	66
1043	22.0	0.2	1.5		100	66
1044	22.1	0.2	1.6		100	66
1045	21.9	0.2	1.6		99	66
1046	21.9	0.2	1.5		99	66
1047	22.0	0.2	1.6		98	66
1048	22.0	0.2	1.6		98	66
1049	22.0	0.2	1.6		96	66
1050	21.9	0.2	1.5		111	66
1051	21.9	0.5	5.1		139	66
1052	22.0	0.2	1.7		133	66
1053	21.9	0.2	1.3		121	66
1054	22.0	0.1	1.1		114	66
1055	22.1	0.1	1.0		110	66
1056	21.9	0.1	0.9		107	65
1057	21.8	0.1	0.8		105	66
1058	21.8	0.1	0.7		103	65
1059	21.9	0.1	0.7		102	66
1060	21.9	0.1	0.7		101	66
1061	22.0	0.1	0.7		100	66
1062	21.9	0.1	0.6		99	66
1063	21.9	0.1	0.6		98	66
1064	21.8	0.1	0.6		97	66
1065	22.0	0.1	0.6		123	66
1066	21.8	0.5	3.6		149	66
1067	21.7	1.3	3.7		165	66
1068	21.5	1.2	4.1		178	66
1069	21.3	1.2	4.3		193	66
1070	21.1	1.9	6.7		208	67
1071	20.8	2.4	8.4		221	67

1072	20.6	2.1	9.1		232	67
1073	20.3	2.0	10.2		244	67
1074	20.1	1.4	11.7		258	67
1075	19.7	0.5	13.3		273	67
1076	19.1	0.2	14.6		288	67
1077	18.9	0.2	15.1		300	67
1078	18.4	0.1	15.5		310	67
1079	18.1	0.1	15.3		318	67
1080	17.6	0.1	15.2		327	67
1081	17.0	0.2	18.5		342	67
1082	16.7	0.1	18.5		349	67
1083	16.0	0.1	17.5		354	67
1084	15.7	0.1	17.1		356	66
1085	15.2	0.1	16.8		357	67
1086	14.9	0.1	16.7		358	67
1087	14.2	0.1	16.5		359	67
1088	13.8	0.1	16.3		361	66
1089	13.4	0.1	16.2		362	66
1090	13.0	0.1	16.0		364	66
1091	12.6	0.1	15.8		366	66
1092	12.2	0.1	15.6		367	66
1093	11.6	0.1	15.5		368	66
1094	11.3	0.1	15.3		360	66
1095	11.4	0.1	10.9		323	66
1096	10.9	0.0	11.6		301	66
1097	10.8	0.1	10.5		288	66
1098	10.9	0.1	12.5		276	66
1099	10.8	0.1	11.3		266	66
1100	10.6	0.1	9.7		257	66
1101	10.6	0.1	8.8		249	66
1102	10.5	0.1	8.0		242	66
1103	10.5	0.2	7.1		236	66
1104	10.5	0.3	6.2		231	66
1105	10.6	0.3	5.7		225	66
1106	10.4	0.3	5.2		221	66
1107	10.4	0.3	4.0		218	66
1108	10.6	0.2	2.6		215	67
1109	10.5	0.4	3.0		211	67
1110	10.4	0.7	3.6		206	67
1111	10.4	1.1	4.5		202	67
1112	10.3	1.3	5.1		198	67
1113	10.3	1.5	5.6		195	67

1114	10.4	1.7	6.2		191	67
1115	10.3	1.9	6.8		188	67
1116	10.3	2.0	7.0		184	67
1117	10.2	2.1	7.4		181	67
1118	10.3	2.1	7.3		178	67
1119	10.3	2.0	7.0		174	68
1120	10.2	2.0	7.0		171	67
1121	10.4	2.0	6.8		169	67
1122	10.2	1.9	6.4		166	67
1123	10.3	1.8	6.3		163	67
1124	10.3	1.8	6.2		160	68
1125	10.2	1.8	6.0		158	68
1126	10.3	1.7	5.8		155	68
1127	10.3	1.6	5.6		153	68
1128	10.3	1.6	5.4		151	68
1129	10.3	1.5	5.2		150	68
1130	10.3	1.5	5.0		148	67
1131	10.5	1.4	4.9		146	68
1132	10.3	1.4	4.9		144	67
1133	10.3	1.3	4.6		142	67
1134	10.2	1.3	4.3		140	67
1135	10.2	1.3	4.5		138	67
1136	10.2	1.3	4.4		136	67
1137	10.2	3.2	10.0		178	67
1138	10.1	0.9	4.1		179	67
1139	10.0	0.8	3.8		163	67
1140	9.9	0.7	3.5		154	66
1141	10.0	0.7	3.4		148	66
1142	9.9	0.6	3.3		143	66
1143	9.8	0.6	3.1		140	66
1144	9.9	0.6	2.9		137	66
1145	10.0	0.5	2.8		135	67
1146	9.9	0.5	2.7		133	67
1147	9.8	0.5	2.6		132	66
1148	9.9	0.4	2.5		130	66
1149	9.9	0.4	2.4		128	66
1150	10.1	0.4	2.3		126	66
1151	9.9	0.4	2.2		125	66
1152	9.9	0.4	2.2		123	66
1153	10.0	0.4	2.2		122	66
1154	10.0	0.4	2.1		121	66
1155	9.9	0.3	1.9		120	66

1156	9.9	0.3	2.0		119	66
1157	10.0	0.4	2.0		117	66
1158	10.1	0.3	1.9		116	66
1159	9.9	0.3	1.8		116	65
1160	9.9	0.3	1.8		114	65
1161	10.0	0.3	1.8		113	66
1162	10.0	0.3	1.8		112	66
1163	10.0	0.3	1.7		111	66
1164	10.0	0.3	1.7		110	66
1165	10.1	0.3	1.6		109	66
1166	10.0	0.3	1.6		108	66
1167	10.1	0.3	1.6		107	66
1168	9.9	0.2	1.4		134	66
1169	10.0	0.4	2.3		161	66
1170	9.8	0.2	1.3		144	66
1171	9.8	0.2	1.1		132	67
1172	9.8	0.1	1.0		125	66
1173	10.0	0.1	0.9		120	66
1174	9.9	0.1	0.8		118	67
1175	9.9	0.1	0.8		115	67
1176	10.0	0.1	0.7		113	67
1177	10.0	0.1	0.7		111	67
1178	9.9	0.1	0.7		111	67
1179	9.9	0.1	0.6		109	67
1180	9.9	0.1	0.6		108	67
1181	9.8	0.1	0.6		107	67
1182	10.0	0.1	0.6		106	67
1183	9.9	0.1	0.6		105	67
1184	10.0	0.1	0.7		104	67
1185	9.9	0.1	0.7		104	67
1186	9.8	0.1	0.7		103	68
1187	10.0	0.1	0.7		102	67
1188	9.9	0.1	0.7		101	67
1189	9.9	0.1	0.7		100	67
1190	9.9	0.1	0.7		100	68
1191	10.0	0.1	0.7		100	68
1192	10.0	0.1	0.8		99	68
1193	10.0	0.1	0.8		98	68
1194	9.9	0.1	0.8		98	68
1195	9.9	0.1	0.7		97	68
1196	10.0	0.1	0.8		96	68
1197	9.9	0.1	0.7		96	68

1198	10.0	0.1	0.8		96	68
1199	9.9	0.1	0.8		95	68
1200	10.0	0.3	2.1		129	68
1201	10.0	0.1	1.4		135	68
1202	9.8	0.1	0.7		127	68
1203	9.9	0.1	0.9		148	68
1204	9.8	0.2	1.1		158	68
1205	9.7	0.7	2.5		168	68
1206	9.5	1.9	4.5		180	68
1207	9.3	1.7	4.8		192	67
1208	9.1	2.1	6.5		206	67
1209	8.7	2.6	8.0		218	67
1210	8.6	2.7	8.8		228	66
1211	8.3	2.3	9.2		237	66
1212	8.2	2.2	9.4		245	67
1213	7.9	2.0	9.7		252	67
1214	7.6	1.9	9.9		258	67
1215	7.4	1.9	10.0		264	68
1216	7.1	1.7	10.4		269	68
1217	6.9	1.6	10.3		274	68
1218	6.6	1.7	10.2		277	68
1219	6.3	1.2	11.3		285	68
1220	5.9	1.1	12.2		291	68
1221	5.5	1.2	12.0		295	68
1222	5.2	1.0	11.8		299	68
1223	5.0	1.0	11.8		302	68
1224	4.6	0.9	12.1		307	68
1225	4.3	0.7	12.9		312	68
1226	3.9	0.7	12.7		316	68
1227	3.6	0.7	12.5		319	68
1228	3.3	0.8	12.3		320	68
1229	3.2	0.8	12.4		322	68
1230	2.8	0.9	12.1		324	69
1231	2.4	1.0	11.9		325	69
1232	2.0	1.1	11.7		325	68
1233	1.6	1.5	11.5		325	69
1234	1.3	1.6	11.1		324	69
1235	1.2	1.7	11.1		324	69
1236	0.8	1.5	11.0		324	69
1237	0.0	1.4	10.8		324	69
1238	0.0	1.4	10.5		315	69

OMNI-Test Laboratories, Inc.

ASTM E2618 Wood Heater Run Sheets

Client: Central Boiler Project Number: 0117WB040E Run Number: 3
Model: Edge 360 Tracking Number: 2399 Date: 12/11/19
Test Crew: B Davis
OMNI Equipment ID numbers:

Wood Heater Supplemental Data

Start Time: 1816
Stop Time: 1238 min

Booth #: F3

Stack Gas Leak Check:

Initial: good Final: good

Sample Train Leak Check:

A: 0.0 @ 9 "Hg
B: 0.0 @ 7 "Hg

Calibrations: Span Gas CO_2: 17.06 CO: 4.29

	Pre Test		Post Test	
	Zero	Span	Zero	Span
Time	1755	1755	1500 12/12/19	1500
CO_2	-0.00	17.01	0.05	17.10
CO	-0.00	4.28	0.00	4.29

Air Velocity (ft/min): Initial: <50 Final: <50
Scale Audit (lbs): Initial: 10.0 Final: 10.0
Pitot Tube Leak Test: Initial: good Final: good
Stack Diameter (in): 6"
Induced Draft: 00
% Smoke Capture: 100%
Flue Pipe Cleaned Prior to First Test in Series:
Date: 12/6/19 Initials: GR

	Initial	Middle	Ending
P_b (in/Hg)	29.95		30.12
RH (%)	19.2		24.5
Ambient (°F)	67		69

Tunnel Traverse

Microtector Reading	dP (in H_2O)	T(°F)
1	.010	78
2	.014	78
3	.014	78
4	.012	78
5	.014	78
6	.010	78
1	.008	78
2	.012	78
3	.014	78
4	.016	78
5	.016	78
6	.012	78
Center:		
	.014	78

Background Filter Volume: 267.379

Tunnel Static Pressure (in H_2O):	
Beginning of Test	End of Test
-.184	-.184

Technician Signature: [signature] Date: 1/9/20

OMNI-Test Laboratories, Inc.

ASTM E2618 Wood Heater Run Sheets

Client: Central Boiler Project Number: 0117WB040E Run Number: 3
Model: Edge 360 Tracking Number: 2399 Date: 12/11/19
Test Crew: D Davis
OMNI Equipment ID numbers:

Wood Heater Run Notes

Air Control Settings

Primary:

Heat draw ≈ 34,000 BTU

Secondary: fixed

Tertiary/Pilot: N/A

Fan: Automatic

Preburn Notes

Time	Notes
Ø	Approx. 130 lbs of preburn fuel was burned @ max output. Heat draw flow set to Approx 34,000 and burned for a min. of 1 hr.

Test Notes

Sketch test fuel configuration:

See Photo

Start up procedures & Timeline:

Bypass: N/A
Fuel loaded by: 90 seconds
Door closed at: 100 seconds
Primary air: Automatic

Notes: ~~wat~~ Demand Mode 165-185° F

Time	Notes
60	Changed front filter in train A
15:20	Due to ~~no weight chang~~ less than 1.2 lbs weight loss in 10 min. 36.172 - 35.029 lbs fuel door was opened and fuel load was adjusted. Door open less than 15 seconds.

Technician Signature: D Davis Date: 1/9/20

Run 4

Hydronic Heating Appliances - Test Method ASTM 2618
Results

Manufacturer: Central Boiler
Model: Edge 360
Tracking No.: 2399
Project No.: 0117WB040E
Run: 4
Test Date: December 16, 2019

Burn Rate	**1.30 kg/hr dry**
Average Tunnel Temperature	72 degrees F
Average Gas Velocity in Dilution Tunnel - vs	7.4 feet/second
Average Gas Flow Rate in Dilution Tunnel - Qsd	20373 dscf/hour
Average Delta p	0.014 inches H20
Average Delta H	1.33 inches H20
Total Time of Test	2051 minutes

PARTICULATE EMISSIONS RESULTS

First Hour:	**-0.64** g/hr
	-0.19 g/kg
	-0.07 lb/mmBTU output
Complete Run:	**1.14** g/hr
	0.88 g/kg
	0.12 lb/mmBTU output

	SAMPLE TRAIN 1	SAMPLE TRAIN 2	AMBIENT SAMPLE TRAIN
Total Sample Volume - Vm	327.67 cubic feet	329.68 cubic feet	489.42 cubic feet
Average Gas Meter Temperature	77 degrees F	76 degrees F	64 degrees F
Total Sample Volume (Standard Conditions) - Vmstd	328.5 dscf	324.3 dscf	490.2 dscf
Total Particulates - mn	18.6 mg	18 mg	0.1 mg
Particulate Concentration (dry-standard)	0.000057 grams/dscf	0.000056 grams/dscf	0.000000 grams/dscf
Particulate Emissions	39.29 grams	38.51 grams	
Difference from Average	0.39 grams	0.39 grams	

Results Are Acceptable

	AVERAGE
Total Sample Volume - Vm	328.67 cubic feet
Average Gas Meter Temperature	76 degrees F
Total Sample Volume (Standard Conditions) - Vmstd	326.4 dscf
Particulate Concentration (dry-standard)	0.00006 grams/dscf
Particulate Emissions	38.90 grams
7.5% of the average particulate emissions	2.92 grams

ADDITIONAL ACCEPTANCE CRITERIA

Boiler Water Return Temperature >120 °F	**Acceptable**
Proportional Rate Variation >80%	**Acceptable**
90% of PR Values between 90-110%	**Acceptable**

	SAMPLE TRAIN 1 - FIRST HOUR
Total Sample Volume - Vm	9.47 cubic feet
Average Gas Meter Temperature	70 degrees F
Total Sample Volume (Standard Conditions) - Vmstd	9.66 dscf
Total Particulates - mn	-0.3 mg
Particulate Concentration (dry-standard)	-0.00003 grams/dscf
Particulate Emissions	-0.64 grams
Burn Rate	3.39 (dry kg/hr)
Heat Output Rate	20241 BTU/hr

Hydronic Heating Appliances
Results

Manufacturer: Central Boiler
Model: Edge 360
Tracking No.: 2399
Project No.: 0117WB040E
Run #: 4
Date: 12/16/19

Equipment Numbers:

TRAIN 1 (First Hour emissions)

Sample Component	Reagent	Filter, Probe or Dish #	Weights		
			Final, mg	Tare, mg	Particulate, mg
B. Front filter catch	Filter	D948	116.9	117.2	-0.3
C. Rear filter catch	Filter				0.0
D. Probe catch*	Probe				0.0
E. Filter seals catch*	Seals				0.0

Sub-Total	Total Particulate, mg:	-0.3

TRAIN 1 (Post First Hour Change-out)

Sample Component	Reagent	Filter, Probe or Dish #	Weights		
			Final, mg	Tare, mg	Particulate, mg
B. Front filter catch	Filter	D949	133.6	117.7	15.9
C. Rear filter catch	Filter	D950	116.4	117.4	-1.0
D. Probe catch*	Probe	16	114267.7	114266.3	1.4
E. Filter seals catch*	Seals	R907	3299.6	3297.0	2.6

Sub-Total	Total Particulate, mg:	18.9
Train 1 Aggregate	Total Particulate, mg:	**18.6**

TRAIN 2

Sample Component	Reagent	Filter, Probe or Dish #	Weights		
			Final, mg	Tare, mg	Particulate, mg
A. Front filter catch	Filter	D951	134.4	119.1	15.3
B. Rear filter catch	Filter	D952	116.8	117.7	-0.9
C. Probe catch*	Probe	17	114563.2	114562.0	1.2
D. Filter seals catch*	Seals	R908	3396.2	3393.8	2.4

Total Particulate, mg:	18.0

AMBIENT

Sample Component	Reagent	Filter # or Probe #	Weights		
			Final, mg	Tare, mg	Particulate, mg
A. Front filter catch*	Filter	D953	118.0	117.9	0.1

Total Particulate, mg:	0.1

*Particulate catch that results in a negative number, is assumed to be zero for probes and seals, negative numbers for filters are assumed to be part of the seal weight.

Component	Equations:
A. Front filter catch	Final (mg) - Tare (mg) = Particulate, mg
B. Rear filter catch	Final (mg) - Tare (mg) = Particulate, mg
C. Probe catch	Final (mg) - Tare (mg) = Particulate, mg

Hydronic Heating Appliances
Fuel Moisture

Manufacturer:	Central Boiler
Model:	Edge 360
Tracking No.:	2399
Project No.:	0117WB040E
Technician:	B. Davis
Run #:	4
Test Date:	December 16, 2019

Wet Weight (lb)	% Moisture				
10	25.5	21.3	25	22.8	25.6
10.4	23.7	19.1	24.5	22.7	23.7
11	18.9	21.2	23	19.7	23
10.3	21.1	19.1	22.5	19.4	21.7
7	24.5	18.8	25.3	18.6	23.3
7.1	19.8	23.3	19.3	23.3	22.8
10.4	25.6	19.3	26.1	20.6	23.6
10.3	24.5	19.2	23.8	23.1	24.8
10	23.6	21.5	24.5	22.6	24.9
11	24.5	20.2	24.9	21.6	25.2
10.5	23.6	23.8	20.2	23.3	21.4
11.8	21	18.1	19.8	19.2	21.7

Total Weight of Load (lb): 119.8

Total Moisture of Load (%): 22.3

Equipment Numbers:

Run: 4

Manufacturer: Central Boiler
Model: Edge 360
Tracking No.: 2399
Project No.: 0117WB040E
Test Date: December 16, 2019
Technician: B. Davis
Beginning Clock Time: 16:48
Recording Interval: 1 min.
Total Sampling Time: 2051 min.

Velocity Traverse Data

	Pt 1	Pt 2	Pt 3	Pt 4	Pt 5	Pt 6	Pt 7	Pt 8	Pt 9	Pt 10	Pt 11	Pt 12	Center	
Initial dP	0.011	0.014	0.014	0.014	0.014	0.013	0.011	0.014	0.015	0.014	0.014	0.011	0.015	"H2O
Initial Temp.	68	68	68	68	68	68	68	68	68	68	68	68	68	oF

Air Velocity: Initial: <50 Final: <50 V_{strav} 7.57 ft/sec
Scale Audit: Pre: 10.0 Post: 10.0 Induced Draft: 0 V_{scent} 8.06 ft/sec
Pitot Tube Leak Test: Pre: 0 Post: 0 % Smoke Capture: 100 F_p 0.939
Flue Pipe Cleaned Prior to First Test in Series: Date:

PM Control Module: 335, 336
Dilution Tunnel MW(dry): 29.00 lb/lb-mole
Dilution Tunnel MW(wet): 28.78 lb/lb-mole
Dilution Tunnel H2O: 2.00 percent
Dilution Tunnel Static: -0.180 "H2O
Pitot Tube Cp: 0.99

	(1)	(2)	(amb)
Meter Box Y Factor:	1.009	0.99	0.988

Barometric Pressure:	Begin	Middle	End	Average
	30.33	30.12	29.91	30.12 "Hg

Tunnel Velocity: 7.37 ft/sec
Intial Tunnel Flow: 352.7 scfm
Average Tunnel Flow: 339.5 scfm
Tunnel Area: 0.785 ft2
Post-Test Leak Check (1): 0.000 cfm @ 6 in. Hg
Post-Test Leak Check (2): 0.000 cfm @ 8 in. Hg
Fuel Moisture (dry basis %): 22.3
Total Particulate (1): 18.6
Total Particulate (2): 18.0

Elapsed Time	Gas Meter Cubic Feet (1)	Gas Meter Cubic Feet (2)	Gas Meter Cubic Feet (amb)	Sample Rate, cfm (1)	Sample Rate, cfm (2)	Orifice dH (1)	Orifice dH (2)	Orifice dH (amb)	Meter oF (1)	Meter oF (2)	Meter oF (amb)	Meter Vac. in. Hg. (1)	Meter Vac. in. Hg. (2)	Dilution Tunnel Temp.	Dilution Tunnel dP	Pro. Rate (%) (1)	Pro. Rate (%) (2)	Fuel Weight, lb: Scale Reading	Fuel Weight, lb: Weight Change	Flow, gpm: Load Side Liquid Flow Rate	Flow, gpm: Boiler Side Liquid Flow Rate (optional)	Temperature Data, oF: Thermopile ΔT	Boiler to Heat Exch. Temp.	Heat Exch to Boiler Temp.	Inlet Load Temp.	Outlet Load Temp.	Stack	Filter (1)	Filter (2)	Ambient		Specific Heat of Inlet Water (BTU/lb-°F)	Mass Flow Rate of Inlet Water (lb/min)	Heat Output, Btu
0	0.000	0.000	0.000			0.95	0.91	0.24	66	66	63	1.82	1.20	89	0.016			119.8		0.33		104.8	165.8	163.9	59.8	164.6	291	64	64	63				
1	0.151	0.158		0.15	0.16	1.35	1.09	0.24	66	66	63	1.88	1.30	82	0.016	91	95	119.4	0.40	0.37		105.8	167.0	165.0	59.9	165.7	279	65	65	63		1.001	3.110	329
2	0.309	0.318		0.16	0.16	1.34	1.09	0.24	66	66	63	1.88	1.30	79	0.015	98	99	118.9	0.55	0.33		106.8	167.7	165.9	60.0	166.8	252	65	65	63		1.001	2.788	298
3	0.467	0.477		0.16	0.16	1.34	1.07	0.24	67	66	63	1.91	1.40	87	0.016	96	96	118.3	0.55	0.51		107.0	167.7	165.8	60.1	167.1	267	66	66	63		1.001	4.235	454
4	0.625	0.638		0.16	0.16	1.33	1.08	0.24	67	66	63	1.91	1.40	90	0.015	99	100	117.6	0.67	0.53		107.3	168.1	165.2	60.2	167.5	288	66	67	63		1.001	4.397	472
5	0.782	0.797		0.16	0.16	1.33	1.08	0.24	67	66	63	1.90	1.40	93	0.015	99	99	117.1	0.55	0.55		108.0	168.8	166.2	60.2	168.2	301	67	67	63		1.001	4.560	493
6	0.939	0.956		0.16	0.16	1.33	1.08	0.24	67	66	63	1.89	1.40	94	0.014	102	103	116.5	0.56	0.47		109.0	169.8	167.1	60.1	169.1	310	67	68	63		1.001	3.912	427
7	1.095	1.116		0.16	0.16	1.33	1.07	0.24	67	66	63	1.89	1.40	95	0.015	98	100	115.9	0.65	0.49		110.1	170.7	168.0	60.0	170.1	317	68	68	63		1.001	4.075	449
8	1.253	1.275		0.16	0.16	1.33	1.07	0.24	67	66	63	1.90	1.40	96	0.015	99	100	115.5	0.36	0.47		111.0	171.6	168.8	59.9	170.9	322	68	69	63		1.001	3.916	435
9	1.410	1.434		0.16	0.16	1.32	1.07	0.24	67	66	63	1.89	1.40	97	0.015	99	100	115.1	0.39	0.49		111.9	172.4	169.9	59.8	171.7	327	68	69	63		1.001	4.072	456
10	1.566	1.594		0.16	0.16	1.32	1.07	0.24	67	67	63	1.90	1.40	97	0.014	102	104	114.4	0.67	0.47		112.8	173.3	170.7	59.8	172.5	331	69	69	63		1.001	3.916	442
11	1.723	1.752		0.16	0.16	1.33	1.07	0.24	67	67	63	1.90	1.40	98	0.015	99	99	114.0	0.44	0.47		113.8	174.2	171.6	59.7	173.5	334	69	70	63		1.001	3.910	445
12	1.879	1.912		0.16	0.16	1.32	1.07	0.24	67	67	64	1.91	1.40	99	0.014	102	104	113.5	0.49	0.35		114.4	174.9	172.6	59.7	174.1	336	69	70	64		1.001	2.946	337
13	2.037	2.070		0.16	0.16	1.31	1.06	0.24	68	67	64	1.90	1.40	99	0.014	103	103	113.0	0.50	0.34		115.2	176.3	174.4	59.8	175.0	339	70	70	64		1.001	2.806	324
14	2.193	2.229		0.16	0.16	1.31	1.07	0.24	68	67	64	1.90	1.40	99	0.014	102	103	112.4	0.61	0.32		116.3	177.5	175.5	59.9	176.2	341	70	71	64		1.001	2.662	310
15	2.349	2.389		0.16	0.16	1.31	1.06	0.24	68	67	64	1.91	1.40	100	0.015	98	100	112.0	0.40	0.33		117.4	178.8	176.8	60.0	177.4	343	70	71	64		1.001	2.757	324
16	2.505	2.547		0.16	0.16	1.32	1.06	0.24	68	68	64	1.89	1.40	101	0.014	102	103	111.5	0.53	0.37		118.4	180.2	178.1	60.1	178.6	346	70	71	64		1.001	3.106	368
17	2.662	2.705		0.16	0.16	1.32	1.06	0.24	68	68	64	1.91	1.40	101	0.016	96	96	111.1	0.33	0.33		120.0	181.3	179.2	60.3	180.2	348	71	72	64		1.001	2.782	334
18	2.818	2.855		0.16	0.15	1.31	1.06	0.24	68	68	64	1.88	1.40	97	0.015	98	94	110.9	0.26	0.34		120.8	182.3	180.2	60.4	181.2	336	70	71	64		1.001	2.793	338
19	2.974	3.014		0.16	0.16	1.31	1.06	0.24	69	68	64	1.87	1.40	81	0.015	96	98	110.9	0.01	0.34		121.6	183.5	181.4	60.5	182.1	312	70	70	64		1.001	2.793	340
20	3.130	3.173		0.16	0.16	1.33	1.06	0.24	69	68	64	1.89	1.40	77	0.015	96	97	110.9	0.01	0.32		122.6	184.4	182.4	60.6	183.3	290	69	69	64		1.001	2.627	323
21	3.288	3.332		0.16	0.16	1.33	1.06	0.24	69	69	64	1.89	1.40	76	0.013	104	104	110.9	-0.01	0.35		123.1	184.8	182.8	60.7	183.8	274	68	69	64		1.001	2.944	363
22	3.446	3.492		0.16	0.16	1.33	1.06	0.24	69	69	64	1.88	1.40	75	0.013	104	105	110.8	0.03	0.37		123.3	185.0	182.9	60.8	184.1	261	68	68	64		1.001	3.102	383
23	3.603	3.650		0.16	0.16	1.32	1.06	0.24	69	69	64	1.87	1.40	74	0.014	100	100	110.8	0.05	0.33		123.4	185.1	183.1	60.9	184.3	251	67	68	64		1.001	2.781	344
24	3.760	3.809		0.16	0.16	1.32	1.07	0.24	69	69	64	1.87	1.30	74	0.014	100	100	110.8	-0.01	0.37		123.5	185.2	183.2	60.9	184.5	243	67	68	64		1.001	3.100	383
25	3.918	3.970		0.16	0.16	1.33	1.07	0.24	70	69	64	1.87	1.30	73	0.015	97	98	110.7	0.04	0.35		123.6	185.4	183.4	61.0	184.6	236	67	68	64		1.001	2.941	364
26	4.076	4.129		0.16	0.16	1.32	1.06	0.24	70	70	64	1.87	1.30	73	0.015	97	97	110.5	0.23	0.35		123.7	185.6	183.6	61.0	184.8	230	67	68	64		1.001	2.938	364
27	4.234	4.289		0.16	0.16	1.33	1.06	0.24	70	70	64	1.88	1.30	73	0.014	100	101	110.8	-0.35	0.35		123.8	185.7	183.7	61.1	184.9	224	67	68	64		1.001	2.940	364
28	4.393	4.450		0.16	0.16	1.33	1.07	0.24	70	70	64	1.87	1.30	73	0.014	101	101	110.8	0.05	0.33		123.9	185.9	183.9	61.1	185.0	219	67	68	64		1.001	2.780	345
29	4.551	4.609		0.16	0.16	1.32	1.07	0.24	71	70	64	1.88	1.30	74	0.014	100	100	110.7	0.12	0.33		123.9	185.9	183.9	61.2	185.1	214	67	68	64		1.001	2.781	345
30	4.708	4.769		0.16	0.16	1.32	1.06	0.24	71	70	64	1.88	1.30	73	0.014	99	101	110.7	-0.05	0.33		124.1	186.0	183.9	61.2	185.3	210	67	68	64		1.001	2.782	346
31	4.866	4.929		0.16	0.16	1.32	1.06	0.24	71	71	65	1.88	1.30	71	0.014	100	100	110.6	0.12	0.37		124.0	185.9	183.9	61.3	185.3	207	67	67	65		1.001	3.102	385
32	5.024	5.088		0.16	0.16	1.33	1.06	0.24	71	71	65	1.88	1.30	71	0.015	96	96	110.7	-0.09	0.37		124.1	186.0	184.0	61.2	185.4	203	67	67	65		1.001	3.100	385
33	5.182	5.248		0.16	0.16	1.33	1.07	0.24	71	71	65	1.87	1.30	70	0.015	96	97	110.7	0.00	0.35		124.1	186.0	183.9	61.1	185.2	199	67	67	65		1.001	2.940	365
34	5.341	5.409		0.16	0.16	1.33	1.06	0.24	71	71	65	1.88	1.30	70	0.014	100	101	110.7	-0.06	0.33		124.4	186.0	184.1	60.9	185.3	195	67	67	65		1.001	2.782	347
35	5.499	5.568		0.16	0.16	1.33	1.06	0.24	72	71	64	1.87	1.30	69	0.014	99	100	110.6	0.10	0.33		124.7	185.9	184.0	60.7	185.4	192	67	67	64		1.001	2.789	348
36	5.657	5.728		0.16	0.16	1.31	1.07	0.24	72	71	64	1.88	1.30	69	0.014	99	100	110.7	-0.04	0.33		124.8	185.9	184.1	60.5	185.3	187	67	67	64		1.001	2.786	348
37	5.815	5.889		0.16	0.16	1.32	1.07	0.24	72	72	64	1.87	1.30	69	0.014	99	101	110.6	0.04	0.37		124.9	185.9	184.0	60.4	185.3	184	67	67	64		1.001	3.093	387
38	5.974	6.048		0.16	0.16	1.32	1.06	0.24	72	72	64	1.87	1.30	69	0.014	100	99	110.7	-0.07	0.35		125.0	185.9	183.9	60.3	185.2	180	66	67	64		1.001	2.939	368
39	6.132	6.208		0.16	0.16	1.32	1.07	0.24	72	72	64	1.89	1.30	69	0.015	96	97	110.6	0.11	0.33		124.9	185.8	183.8	60.2	185.1	177	66	67	64		1.001	2.720	340
40	6.290	6.369		0.16	0.16	1.33	1.07	0.24	72	72	64	1.88	1.30	68	0.014	99	101	110.6	-0.05	0.33		125.2	185.8	183.8	60.1	185.2	174	66	67	64		1.001	2.787	349
41	6.449	6.529		0.16	0.16	1.33	1.06	0.24	73	72	64	1.88	1.30	68	0.014	100	100	110.6	0.04	0.36		125.1	185.6	183.7	60.1	185.2	171	66	67	64		1.001	3.029	379
42	6.608	6.689		0.16	0.16	1.32	1.07	0.24	73	72	64	1.87	1.30	68	0.013	104	104	110.6	0.00	0.24		125.0	185.6	183.6	60.0	185.0	167	66	66	64		1.001	1.994	249
43	6.766	6.850		0.16	0.16	1.32	1.07	0.24	73	72	64	1.88	1.30	68	0.013	103	104	110.7	-0.09	0.29		124.7	185.6	184.2	60.1	184.8	165	66	66	64		1.001	2.418	302
44	6.924	7.010		0.16	0.16	1.32	1.06	0.24	73	73	63	1.88	1.30	68	0.015	96	96	110.6	0.06	0.26		124.4	185.7	184.3	60.1	184.5	162	66	66	63		1.001	2.147	267
45	7.083	7.170		0.16	0.16	1.33	1.07	0.24	73	73	63	1.89	1.30	67	0.014	100	100	110.6	0.00	0.26		124.6	185.7	184.3	60.1	184.7	160	66	66	63		1.001	2.149	268
46	7.241	7.330		0.16	0.16	1.33	1.07	0.24	73	73	63	1.88	1.30	67	0.015	96	96	110.7	-0.10	0.26		124.5	185.7	184.3	60.1	184.6	157	66	66	63		1.001	2.150	268
47	7.400	7.491		0.16	0.16	1.33	1.06	0.24	73	73	63	1.88	1.30	67	0.015	96	97	110.7	0.05	0.51		125.1	185.3	182.3	59.9	185.0	154	65	66	63		1.001	4.231	530
48	7.559	7.651		0.16	0.16	1.33	1.07	0.24	73	73	63	1.89	1.30	67	0.014	100	100	110.6	0.06	0.51		124.9	185.0	182.0	59.8	184.7	152	65	66	63		1.001	4.234	529
49	7.718	7.812		0.16	0.16	1.33	1.07	0.24	73	73	63	1.89	1.30	67	0.014	100	100	110.6	-0.04	0.49		124.6	184.6	181.6	59.7	184.4	150	65	66	63		1.001	4.068	508
50	7.877	7.973		0.16	0.16	1.32	1.07	0.24	74	73	63	1.89	1.30	67	0.013	103	104	110.7	-0.01	0.47		124.5	184.5	181.7	59.7	184.2	148	65	66	63		1.001	3.911	488
51	8.035	8.133		0.16	0.16	1.32	1.07	0.24	74	73	63	1.88	1.30	67	0.014	99	100	110.7	-0.01	0.49		124.5	184.4	181.6	59.6	184.1	146	65	65	63		1.001	4.069	507
52	8.194	8.294		0.16	0.16	1.33	1.07	0.24	74	73	63	1.88	1.30	66	0.015	96	97	110.6	0.05	0.32		124.1	184.3	182.5	59.6	183.7	144	65	65	63		1.001	2.627	326

Elapsed Time	Particulate Sampling Data																	Fuel Weight, lb		Flow, gpm		Temperature Data, oF												
	Gas Meter Cubic Feet (1)	Gas Meter Cubic Feet (2)	Gas Meter Cubic Feet (amb)	Sample Rate, cfm (1)	Sample Rate, cfm (2)	Orifice dH (1)	Orifice dH (2)	Orifice dH (amb)	Meter oF (1)	Meter oF (2)	Meter oF (amb)	Meter Vac. in. Hg. (1)	Meter Vac. in. Hg. (2)	Dilution Tunnel Temp.	Dilution Tunnel dP	Pro. Rate (%) (1)	Pro. Rate (%) (2)	Scale Reading	Weight Change	Load Side Liquid Flow Rate	Boiler Side Liquid Flow Rate (optional)	Thermopile ΔT	Boiler to Heat Exch. Temp.	Heat Exch to Boiler Temp.	Inlet Load Temp.	Outlet Load Temp.	Stack	Filter (1)	Filter (2)	Ambient		Specific Heat of Inlet Water (BTU/lb-°F)	Mass Flow Rate of Inlet Water (lb/min)	Heat Output, Btu
53	8.353	8.455		0.16	0.16	1.32	1.07	0.24	74	73	63	1.88	1.30	66	0.015	96	97	110.6	0.01	0.30		124.1	184.4	182.6	59.6	183.7	142	65	65	63		1.001	2.471	307
54	8.511	8.615		0.16	0.16	1.32	1.07	0.24	74	74	63	1.87	1.30	66	0.014	99	99	110.6	-0.04	0.35		124.0	184.2	182.4	59.6	183.6	140	65	65	63		1.001	2.945	366
55	8.670	8.775		0.16	0.16	1.33	1.07	0.24	74	74	63	1.87	1.30	66	0.015	96	96	110.8	-0.12	0.35		124.0	184.1	182.2	59.5	183.6	138	65	65	63		1.001	2.945	366
56	8.829	8.937		0.16	0.16	1.33	1.07	0.24	74	74	63	1.87	1.30	66	0.014	99	101	110.5	0.24	0.37		123.7	184.0	182.2	59.5	183.2	136	65	65	63		1.001	3.054	378
57	8.988	9.098		0.16	0.16	1.33	1.07	0.24	74	74	63	1.88	1.30	66	0.016	93	94	110.7	-0.21	0.33		124.0	183.9	182.0	59.4	183.4	134	64	65	63		1.001	2.787	346
58	9.148	9.258		0.16	0.16	1.33	1.07	0.24	74	74	63	1.87	1.30	66	0.015	97	96	110.6	0.15	0.33		123.9	183.9	182.0	59.4	183.3	132	64	65	63		1.001	2.788	346
59	9.307	9.418		0.16	0.16	1.33	1.07	0.24	74	74	63	1.87	1.30	66	0.015	96	96	110.7	-0.08	0.32		124.0	183.8	181.9	59.3	183.3	130	64	65	63		1.001	2.627	326
60	9.466	9.580		0.16	0.16	1.32	1.07	0.24	74	74	63	1.87	1.30	66	0.015	96	97	110.6	0.01	0.33		123.8	183.6	181.8	59.3	183.1	129	64	65	63		1.001	2.790	346
61	9.624	9.740		0.16	0.16	1.32	1.06	0.24	74	74	63	1.87	1.40	73	0.016	93	94	110.3	0.39	0.33		123.7	183.5	181.7	59.3	182.9	164	65	65	63		1.001	2.789	345
62	9.785	9.901		0.16	0.16	1.34	1.08	0.24	74	74	62	1.87	1.30	73	0.015	98	97	110.3	-0.09	0.33		123.4	183.4	181.6	59.2	182.7	193	65	65	62		1.001	2.787	344
63	9.944	10.062		0.16	0.16	1.34	1.08	0.24	74	74	62	1.88	1.30	67	0.014	100	100	110.3	0.07	0.30		123.5	183.6	181.7	59.2	182.7	169	67	65	62		1.001	2.469	305
64	10.103	10.223		0.16	0.16	1.34	1.07	0.24	75	74	62	1.87	1.30	66	0.015	96	97	110.4	-0.10	0.37		123.9	183.5	181.7	59.2	183.1	155	67	64	62		1.001	3.108	386
65	10.262	10.384		0.16	0.16	1.34	1.08	0.24	75	74	62	1.87	1.30	66	0.014	99	100	110.3	0.06	0.37		123.6	183.5	181.6	59.2	182.8	146	66	64	62		1.001	3.112	385
66	10.421	10.544		0.16	0.16	1.34	1.08	0.24	75	74	62	1.87	1.30	65	0.013	103	103	110.4	-0.04	0.35		123.6	183.4	181.5	59.2	182.9	141	66	64	62		1.001	2.952	365
67	10.581	10.706		0.16	0.16	1.34	1.07	0.24	75	74	62	1.88	1.30	65	0.013	104	104	110.3	0.01	0.33		123.4	183.3	181.5	59.2	182.7	137	66	64	62		1.001	2.791	345
68	10.740	10.866		0.16	0.16	1.32	1.07	0.24	75	74	62	1.87	1.30	65	0.015	96	96	110.3	0.05	0.33		123.4	183.1	181.4	59.2	182.6	134	66	64	62		1.001	2.789	344
69	10.900	11.027		0.16	0.16	1.33	1.08	0.24	75	74	62	1.87	1.30	65	0.015	96	97	110.2	0.12	0.33		123.2	183.1	181.3	59.3	182.5	131	65	64	62		1.001	2.788	344
70	11.059	11.189		0.16	0.16	1.32	1.08	0.24	75	74	62	1.88	1.30	65	0.015	96	97	110.3	-0.15	0.30		123.1	183.0	181.2	59.3	182.4	129	65	64	62		1.001	2.471	305
71	11.218	11.349		0.16	0.16	1.33	1.07	0.24	75	74	62	1.87	1.30	65	0.014	99	99	110.4	-0.07	0.32		123.0	182.9	181.2	59.3	182.3	128	65	64	62		1.001	2.631	324
72	11.377	11.510		0.16	0.16	1.33	1.07	0.24	75	74	62	1.88	1.30	65	0.013	103	104	110.4	0.01	0.30		123.0	182.9	181.1	59.3	182.2	126	65	64	62		1.001	2.473	304
73	11.537	11.671		0.16	0.16	1.33	1.07	0.24	75	74	62	1.87	1.30	65	0.014	100	100	110.4	0.03	0.32		122.9	182.7	181.0	59.3	182.1	124	65	64	62		1.001	2.633	324
74	11.695	11.833		0.16	0.16	1.34	1.07	0.24	75	74	62	1.88	1.30	65	0.015	95	97	110.3	0.01	0.33		122.7	182.6	180.8	59.3	182.0	122	65	64	62		1.001	2.790	343
75	11.855	11.993		0.16	0.16	1.34	1.07	0.24	75	74	62	1.87	1.30	65	0.015	96	96	110.3	0.09	0.33		122.6	182.5	180.7	59.3	181.9	121	65	64	62		1.001	2.790	342
76	12.014	12.154		0.16	0.16	1.34	1.07	0.24	75	74	62	1.87	1.30	65	0.014	99	100	110.3	-0.07	0.33		122.3	182.4	180.5	59.3	181.6	120	64	64	62		1.001	2.787	341
77	12.174	12.316		0.16	0.16	1.34	1.07	0.24	75	74	62	1.87	1.30	65	0.015	96	97	110.3	0.02	0.35		122.4	182.2	180.4	59.3	181.7	119	64	64	62		1.001	2.950	362
78	12.334	12.477		0.16	0.16	1.33	1.07	0.24	75	74	62	1.88	1.30	66	0.017	91	91	110.3	0.06	0.32		122.3	182.1	180.3	59.2	181.5	117	64	64	62		1.001	2.639	323
79	12.494	12.638		0.16	0.16	1.34	1.07	0.24	75	74	62	1.89	1.30	66	0.015	96	97	110.3	-0.01	0.37		122.2	182.0	180.2	59.2	181.4	116	64	64	62		1.001	3.112	381
80	12.653	12.799		0.16	0.16	1.33	1.08	0.24	75	74	62	1.87	1.30	66	0.014	99	100	110.3	-0.08	0.33		122.1	181.9	180.1	59.2	181.3	114	64	64	62		1.001	2.727	333
81	12.813	12.960		0.16	0.16	1.33	1.07	0.24	75	74	62	1.88	1.30	66	0.015	96	97	110.3	0.00	0.35		121.9	181.7	179.9	59.2	181.1	113	64	64	62		1.001	2.954	361
82	12.972	13.121		0.16	0.16	1.34	1.07	0.24	75	74	62	1.88	1.30	66	0.015	96	97	110.4	-0.02	0.35		121.9	181.7	179.9	59.2	181.1	112	64	64	62		1.001	2.951	360
83	13.131	13.282		0.16	0.16	1.33	1.07	0.24	75	74	63	1.87	1.30	66	0.014	99	100	110.3	0.02	0.37		121.6	181.5	179.7	59.3	180.9	111	64	64	63		1.001	3.090	376
84	13.291	13.444		0.16	0.16	1.33	1.08	0.24	75	74	63	1.89	1.30	66	0.015	96	97	110.4	-0.05	0.32		121.4	181.4	179.7	59.5	180.9	110	64	64	63		1.001	2.702	328
85	13.450	13.605		0.16	0.16	1.34	1.07	0.24	75	74	63	1.89	1.30	66	0.013	103	104	110.4	0.00	0.32		121.1	181.3	179.6	59.6	180.6	109	64	64	63		1.001	2.629	319
86	13.610	13.765		0.16	0.16	1.34	1.07	0.24	75	74	63	1.88	1.30	66	0.014	100	99	110.4	0.01	0.33		120.8	181.2	179.6	59.7	180.6	109	64	64	63		1.001	2.791	338
87	13.769	13.926		0.16	0.16	1.34	1.07	0.24	75	74	63	1.87	1.30	69	0.016	93	94	110.4	-0.03	0.32		120.5	181.1	179.6	59.9	180.4	107	64	64	63		1.001	2.626	317
88	13.928	14.088		0.16	0.16	1.34	1.07	0.24	75	75	64	1.87	1.30	68	0.015	96	97	110.4	-0.03	0.35		120.4	181.1	179.4	60.0	180.4	106	64	64	64		1.001	2.943	355
89	14.089	14.249		0.16	0.16	1.33	1.07	0.24	75	75	63	1.89	1.30	67	0.016	94	93	110.3	0.11	0.28		120.1	180.9	179.4	60.2	180.3	106	64	64	63		1.001	2.314	278
90	14.249	14.409		0.16	0.16	1.34	1.08	0.24	75	75	63	1.88	1.30	67	0.014	100	99	110.4	-0.12	0.32		119.9	180.8	179.3	60.3	180.2	105	64	64	63		1.001	2.625	315
91	14.408	14.571		0.16	0.16	1.33	1.07	0.24	75	75	63	1.88	1.30	67	0.014	99	101	110.4	0.05	0.30		119.8	180.7	179.1	60.4	180.1	104	64	64	63		1.001	2.467	296
92	14.567	14.732		0.16	0.16	1.32	1.06	0.24	75	75	63	1.89	1.40	69	0.014	100	100	110.0	0.42	0.32		119.6	180.6	179.0	60.4	180.0	105	64	64	63		1.001	2.628	315
93	14.726	14.892		0.16	0.16	1.32	1.06	0.24	75	75	63	1.89	1.40	75	0.014	100	100	109.9	0.07	0.30		119.6	180.5	178.9	60.3	179.9	166	64	64	63		1.001	2.466	295
94	14.886	15.053		0.16	0.16	1.34	1.07	0.24	75	75	63	1.89	1.30	70	0.016	94	94	110.0	-0.06	0.31		119.5	180.5	178.8	60.2	179.8	166	64	64	63		1.001	2.623	314
95	15.045	15.214		0.16	0.16	1.34	1.08	0.24	75	75	63	1.89	1.30	67	0.013	103	104	109.9	0.01	0.31		119.7	180.5	178.9	60.2	179.9	146	64	64	63		1.001	2.623	314
96	15.204	15.375		0.16	0.16	1.34	1.07	0.24	75	75	63	1.88	1.30	66	0.016	93	93	110.1	-0.14	0.30		119.7	180.4	178.8	60.1	179.8	134	64	64	63		1.001	2.464	295
97	15.364	15.536		0.16	0.16	1.34	1.07	0.24	75	75	63	1.89	1.30	66	0.013	104	104	110.0	0.14	0.30		119.6	180.3	178.6	60.0	179.7	127	64	64	63		1.001	2.465	295
98	15.523	15.698		0.16	0.16	1.34	1.07	0.24	75	75	63	1.88	1.30	66	0.014	99	100	109.9	0.01	0.32		119.6	180.2	178.6	60.0	179.6	122	64	64	63		1.001	2.628	315
99	15.683	15.858		0.16	0.16	1.34	1.07	0.24	75	75	63	1.88	1.30	66	0.014	100	99	109.9	0.03	0.31		119.6	180.1	178.5	59.9	179.6	119	64	64	63		1.001	2.614	313
100	15.843	16.019		0.16	0.16	1.34	1.08	0.24	75	75	63	1.88	1.30	66	0.014	100	100	110.0	-0.09	0.32		119.5	180.0	178.4	59.9	179.4	117	64	64	63		1.001	2.640	316
101	16.003	16.180		0.16	0.16	1.34	1.08	0.24	75	75	63	1.89	1.30	65	0.013	104	103	110.0	0.05	0.33		119.4	179.9	178.3	59.8	179.3	115	64	64	63		1.001	2.787	333
102	16.162	16.342		0.16	0.16	1.34	1.07	0.24	75	75	63	1.88	1.30	65	0.015	96	97	109.9	0.01	0.34		119.4	179.8	178.2	59.8	179.2	114	64	64	63		1.001	2.812	336
103	16.322	16.502		0.16	0.16	1.33	1.08	0.24	76	75	63	1.88	1.30	65	0.015	96	96	109.9	0.08	0.32		119.3	179.7	178.0	59.8	179.1	112	64	64	63		1.001	2.667	319
104	16.481	16.664		0.16	0.16	1.33	1.08	0.24	76	75	62	1.89	1.30	65	0.016	93	94	109.8	0.05	0.34		119.2	179.5	177.9	59.7	178.9	111	64	64	62		1.001	2.840	339
105	16.641	16.825		0.16	0.16	1.33	1.08	0.24	75	75	62	1.87	1.30	65	0.014	100	100	110.0	-0.20	0.32		119.2	179.5	177.8	59.7	178.9	110	64	64	62		1.001	2.631	314
106	16.800	16.986		0.16	0.16	1.34	1.07	0.24	76	75	62	1.89	1.30	65	0.015	96	96	109.9	0.10	0.32		119.1	179.3	177.7	59.7	178.8	108	64	64	62		1.001	2.627	313
107	16.960	17.147		0.16	0.16	1.33	1.07	0.24	76	75	62	1.88	1.30	65	0.015	96	96	109.9	0.02	0.33		119.0	179.3	177.6	59.7	178.7	108	64	64	62		1.001	2.788	332
108	17.119	17.308		0.16	0.16	1.34	1.07	0.24	76	75	62	1.87	1.30	65	0.015	96	96	110.0	-0.08	0.32		118.9	179.1	177.5	59.6	178.6	107	64	64	62		1.001	2.630	313
109	17.279	17.470		0.16	0.16	1.34	1.08	0.24	76	75	62	1.89	1.30	65	0.014	100	100	109.9	0.06	0.32		118.8	179.0	177.4	59.6	178.4	105	63	64	62		1.001	2.630	313
110	17.438	17.630		0.16	0.16	1.34	1.07	0.24	76	75	62	1.89	1.30	65	0.015	96	96	110.0	-0.11	0.33		118.7	178.9	177.2	59.6	178.3	105	63	63	62		1.001	2.789	332
111	17.598	17.791		0.16	0.16	1.34	1.07	0.24	76	75	62	1.88	1.30	65	0.014	100	100	109.9	0.08	0.32		118.7	178.8	177.1	59.5	178.2	104	63	63	62		1.001	2.632	313
112	17.758	17.953		0.16	0.16	1.34	1.08	0.24	76	75	62	1.89	1.30	65	0.016	93	94	109.9	0.05	0.32		118.6	178.6	177.0	59.5	178.1	103	63	63	62		1.001	2.630	312
113	17.918	18.114		0.16	0.16	1.34	1.07	0.24	76	75	62	1.88	1.30	65	0.014	100	100	109.9	0.01	0.30		118.5	178.5	176.8	59.5	177.9	102	63	63	62		1.001	2.472	293
114	18.078	18.275		0.16	0.16	1.33	1.07	0.24	76	75	62	1.87	1.30	65	0.016	93	93	109.9	0.01	0.32		118.4	178.4	176.8	59.4	177.8	101	63	63	62		1.001	2.632	312

Elapsed Time	Particulate Sampling Data																	Fuel Weight, lb		Flow, gpm		Temperature Data, oF												
	Gas Meter Cubic Feet (1)	Gas Meter Cubic Feet (2)	Gas Meter Cubic Feet (amb)	Sample Rate, cfm (1)	Sample Rate, cfm (2)	Orifice dH (1)	Orifice dH (2)	Orifice dH (amb)	Meter oF (1)	Meter oF (2)	Meter oF (amb)	Meter Vac. in. Hg. (1)	Meter Vac. in. Hg. (2)	Dilution Tunnel Temp.	Dilution Tunnel dP	Pro. Rate (%) (1)	Pro. Rate (%) (2)	Scale Reading	Weight Change	Load Side Liquid Flow Rate	Boiler Side Liquid Flow Rate (optional)	Thermopile ΔT	Boiler to Heat Exch. Temp.	Heat Exch to Boiler Temp.	Inlet Load Temp.	Outlet Load Temp.	Stack	Filter (1)	Filter (2)	Ambient		Specific Heat of Inlet Water (BTU/lb-°F)	Mass Flow Rate of Inlet Water (lb/min)	Heat Output, Btu
115	18.238	18.436		0.16	0.16	1.33	1.07	0.24	76	75	62	1.87	1.30	64	0.014	100	100	109.9	-0.03	0.34		118.3	178.3	176.7	59.4	177.7	100	63	63	62		1.001	2.792	331
116	18.397	18.598		0.16	0.16	1.33	1.08	0.24	76	75	62	1.87	1.30	64	0.013	103	104	109.8	0.14	0.32		118.3	178.2	176.6	59.4	177.6	100	63	63	62		1.001	2.635	312
117	18.557	18.759		0.16	0.16	1.34	1.07	0.24	76	75	62	1.87	1.30	64	0.013	103	103	109.9	-0.12	0.32		118.2	178.1	176.4	59.3	177.5	99	63	63	62		1.001	2.635	312
118	18.716	18.920		0.16	0.16	1.34	1.07	0.24	76	75	63	1.88	1.30	64	0.014	99	100	109.9	-0.04	0.34		118.1	178.0	176.3	59.3	177.4	98	63	63	63		1.001	2.793	330
119	18.876	19.081		0.16	0.16	1.33	1.08	0.24	76	75	62	1.89	1.30	66	0.015	96	96	110.0	-0.03	0.30		118.0	177.8	176.2	59.2	177.3	98	63	63	62		1.001	2.473	292
120	19.035	19.243		0.16	0.16	1.33	1.08	0.24	76	75	62	1.89	1.30	65	0.013	103	104	109.9	0.09	0.34		117.9	177.7	176.0	59.2	177.1	97	63	63	62		1.001	2.806	331
121	19.195	19.404		0.16	0.16	1.34	1.08	0.24	76	75	62	1.89	1.30	65	0.013	103	103	109.8	0.04	0.30		117.8	177.5	175.9	59.2	177.0	97	63	63	62		1.001	2.473	292
122	19.355	19.565		0.16	0.16	1.34	1.08	0.24	76	75	62	1.88	1.30	65	0.015	96	96	110.0	-0.14	0.32		117.7	177.4	175.8	59.2	176.9	96	63	63	62		1.001	2.681	316
123	19.514	19.727		0.16	0.16	1.34	1.08	0.24	76	75	62	1.89	1.30	65	0.015	96	97	109.8	0.22	0.31		117.6	177.3	175.7	59.2	176.8	95	63	63	62		1.001	2.554	301
124	19.675	19.888		0.16	0.16	1.34	1.07	0.24	76	75	62	1.88	1.40	69	0.013	104	104	109.5	0.27	0.34		117.3	177.2	175.5	59.3	176.6	134	63	63	62		1.001	2.795	326
125	19.835	20.048		0.16	0.16	1.34	1.07	0.24	76	75	63	1.87	1.30	72	0.013	104	104	109.6	-0.10	0.35		117.1	177.0	175.4	59.4	176.5	167	63	64	63		1.001	2.951	346
126	19.994	20.209		0.16	0.16	1.33	1.08	0.24	76	75	63	1.89	1.30	67	0.014	99	100	109.5	0.04	0.33		116.8	177.0	175.3	59.6	176.4	144	63	63	63		1.001	2.790	326
127	20.154	20.371		0.16	0.16	1.33	1.07	0.24	76	75	63	1.88	1.30	66	0.014	100	100	109.6	-0.03	0.32		116.7	177.0	175.3	59.7	176.4	129	63	63	63		1.001	2.630	307
128	20.314	20.531		0.16	0.16	1.33	1.07	0.24	75	75	63	1.89	1.30	66	0.016	93	93	109.7	-0.14	0.30		116.4	176.9	175.2	59.8	176.3	120	63	63	63		1.001	2.473	288
129	20.473	20.692		0.16	0.16	1.33	1.08	0.24	75	75	63	1.89	1.30	66	0.016	93	93	109.6	0.07	0.30		116.1	176.7	175.1	60.0	176.1	115	63	63	63		1.001	2.470	287
130	20.632	20.854		0.16	0.16	1.34	1.08	0.24	75	75	63	1.88	1.30	66	0.015	96	97	109.6	0.02	0.33		115.9	176.6	175.0	60.1	176.0	111	63	63	63		1.001	2.788	323
131	20.792	21.015		0.16	0.16	1.34	1.07	0.24	76	75	63	1.88	1.30	67	0.014	100	100	109.6	0.00	0.35		115.7	176.5	174.9	60.2	176.0	109	63	63	63		1.001	2.948	341
132	20.952	21.176		0.16	0.16	1.33	1.07	0.24	75	75	63	1.88	1.30	67	0.014	100	100	109.6	0.03	0.32		115.4	176.4	174.7	60.4	175.8	107	63	64	63		1.001	2.629	304
133	21.111	21.337		0.16	0.16	1.34	1.07	0.24	75	75	63	1.89	1.30	67	0.014	99	100	109.7	-0.12	0.30		115.2	176.3	174.7	60.5	175.7	105	63	64	63		1.001	2.472	285
134	21.271	21.499		0.16	0.16	1.34	1.07	0.24	75	75	63	1.89	1.30	67	0.015	97	97	109.6	0.13	0.32		115.0	176.2	174.6	60.6	175.6	104	63	64	63		1.001	2.629	303
135	21.431	21.659		0.16	0.16	1.34	1.07	0.24	75	75	63	1.89	1.30	67	0.015	97	96	109.5	0.09	0.32		114.8	176.1	174.4	60.8	175.5	103	64	64	63		1.001	2.626	302
136	21.590	21.820		0.16	0.16	1.34	1.07	0.24	76	75	63	1.88	1.30	67	0.013	103	104	109.5	-0.02	0.33		114.5	175.9	174.3	60.9	175.4	102	64	64	63		1.001	2.785	319
137	21.751	21.981		0.16	0.16	1.34	1.08	0.24	76	75	63	1.87	1.40	67	0.014	100	100	109.5	0.04	0.31		114.2	175.8	174.1	61.0	175.2	101	64	64	63		1.001	2.623	300
138	21.910	22.142		0.16	0.16	1.33	1.06	0.24	76	75	63	1.88	1.30	67	0.016	93	93	109.6	-0.16	0.35		114.1	175.7	174.1	61.1	175.2	100	64	64	63		1.001	2.943	336
139	22.070	22.303		0.16	0.16	1.33	1.07	0.24	76	75	63	1.89	1.30	68	0.015	96	97	109.6	0.06	0.34		113.7	175.6	174.0	61.2	174.9	99	64	64	63		1.001	2.795	318
140	22.229	22.464		0.16	0.16	1.33	1.07	0.24	76	75	63	1.88	1.40	68	0.015	96	97	109.7	-0.13	0.32		113.7	175.5	173.9	61.3	175.0	99	64	64	63		1.001	2.625	299
141	22.389	22.626		0.16	0.16	1.33	1.07	0.24	76	75	63	1.89	1.30	68	0.015	96	97	109.6	0.12	0.30		113.4	175.3	173.7	61.4	174.8	98	64	64	63		1.001	2.500	284
142	22.548	22.786		0.16	0.16	1.33	1.07	0.24	76	75	64	1.87	1.30	68	0.014	99	99	109.6	-0.03	0.33		113.0	175.2	173.6	61.5	174.5	97	64	64	64		1.001	2.783	315
143	22.708	22.947		0.16	0.16	1.33	1.07	0.24	76	75	63	1.88	1.30	68	0.015	96	97	109.5	0.07	0.33		113.0	175.1	173.4	61.6	174.6	97	64	64	63		1.001	2.725	308
144	22.867	23.108		0.16	0.16	1.33	1.07	0.24	76	75	64	1.88	1.30	68	0.013	103	104	109.5	0.02	0.30		112.8	175.0	173.4	61.7	174.5	96	64	64	64		1.001	2.470	279
145	23.026	23.269		0.16	0.16	1.34	1.07	0.24	76	75	64	1.87	1.30	68	0.017	90	91	109.5	0.04	0.34		112.5	174.9	173.3	61.8	174.3	95	64	64	64		1.001	2.791	314
146	23.186	23.430		0.16	0.16	1.34	1.07	0.24	76	75	64	1.89	1.40	68	0.012	108	108	109.7	-0.17	0.30		112.2	174.8	173.3	61.9	174.1	95	64	64	64		1.001	2.467	277
147	23.346	23.591		0.16	0.16	1.34	1.07	0.24	76	75	63	1.89	1.30	70	0.015	97	97	109.6	0.10	0.32		112.2	174.7	173.2	62.1	174.3	94	64	64	63		1.001	2.626	295
148	23.506	23.753		0.16	0.16	1.34	1.07	0.24	76	75	64	1.88	1.40	69	0.014	100	101	109.6	-0.06	0.33		111.9	174.6	173.1	62.2	174.1	94	64	64	64		1.001	2.784	312
149	23.666	23.913		0.16	0.16	1.33	1.07	0.24	76	75	64	1.88	1.40	68	0.014	100	99	109.5	0.11	0.32		111.6	174.5	173.0	62.3	173.8	93	64	65	64		1.001	2.625	293
150	23.825	24.074		0.16	0.16	1.34	1.07	0.24	76	75	64	1.90	1.40	68	0.014	99	100	109.7	-0.18	0.30		111.5	174.4	172.8	62.3	173.8	93	64	65	64		1.001	2.469	276
151	23.985	24.235		0.16	0.16	1.34	1.07	0.24	76	75	64	1.88	1.40	68	0.012	108	108	109.5	0.17	0.35		111.4	174.2	172.7	62.3	173.6	92	64	65	64		1.001	2.940	328
152	24.144	24.396		0.16	0.16	1.33	1.07	0.24	76	75	64	1.89	1.40	67	0.015	96	97	109.6	-0.11	0.30		111.5	174.1	172.6	62.2	173.7	92	65	65	64		1.001	2.470	276
153	24.304	24.557		0.16	0.16	1.33	1.07	0.24	76	75	64	1.88	1.30	67	0.012	108	108	109.6	0.01	0.33		111.5	174.0	172.5	62.0	173.5	92	65	65	64		1.001	2.784	311
154	24.463	24.718		0.16	0.16	1.33	1.07	0.24	76	76	64	1.89	1.40	67	0.013	103	103	109.5	0.12	0.30		111.5	173.9	172.4	61.9	173.4	91	64	65	64		1.001	2.472	276
155	24.623	24.880		0.16	0.16	1.33	1.07	0.24	76	76	64	1.88	1.40	67	0.015	96	97	109.3	0.21	0.30		111.5	173.8	172.2	61.7	173.2	91	64	65	64		1.001	2.465	275
156	24.782	25.040		0.16	0.16	1.33	1.07	0.24	76	76	64	1.90	1.40	72	0.014	100	100	109.2	0.11	0.31		111.5	173.6	172.1	61.6	173.1	136	65	65	64		1.001	2.623	293
157	24.942	25.200		0.16	0.16	1.34	1.08	0.24	76	76	64	1.89	1.30	69	0.015	97	96	109.2	-0.07	0.30		111.5	173.5	172.0	61.5	173.0	143	65	65	64		1.001	2.469	276
158	25.101	25.362		0.16	0.16	1.34	1.08	0.24	76	76	64	1.88	1.30	67	0.013	103	104	109.3	-0.04	0.33		111.5	173.5	171.9	61.4	172.9	129	65	65	64		1.001	2.786	311
159	25.261	25.523		0.16	0.16	1.34	1.07	0.24	76	76	63	1.88	1.30	67	0.014	100	100	109.3	-0.01	0.30		111.5	173.4	171.8	61.3	172.8	120	65	65	63		1.001	2.532	283
160	25.421	25.684		0.16	0.16	1.34	1.07	0.24	76	76	63	1.88	1.30	66	0.013	103	103	109.2	0.11	0.30		111.6	173.2	171.7	61.2	172.8	114	64	65	63		1.001	2.467	276
161	25.581	25.845		0.16	0.16	1.33	1.07	0.24	76	76	63	1.89	1.40	66	0.014	100	100	109.4	-0.20	0.32		111.5	173.1	171.6	61.1	172.6	110	64	65	63		1.001	2.627	293
162	25.741	26.007		0.16	0.16	1.34	1.07	0.24	76	76	63	1.89	1.30	66	0.014	100	100	109.3	0.13	0.32		111.4	173.0	171.5	61.0	172.5	107	64	64	63		1.001	2.629	293
163	25.900	26.167		0.16	0.16	1.34	1.08	0.24	76	76	63	1.88	1.40	66	0.015	96	96	109.2	0.07	0.32		111.4	172.9	171.4	61.0	172.4	105	64	64	63		1.001	2.639	294
164	26.060	26.328		0.16	0.16	1.33	1.08	0.24	76	76	63	1.88	1.30	66	0.014	100	100	109.3	-0.13	0.32		111.2	172.8	171.2	60.9	172.2	103	64	64	63		1.001	2.630	293
165	26.220	26.490		0.16	0.16	1.34	1.08	0.24	76	76	63	1.88	1.30	66	0.015	96	97	109.1	0.22	0.32		111.1	172.6	171.1	60.9	172.0	101	64	64	63		1.001	2.627	292
166	26.379	26.651		0.16	0.16	1.34	1.07	0.24	76	76	63	1.88	1.30	65	0.015	96	96	109.3	-0.17	0.32		111.2	172.5	171.0	60.8	172.0	100	64	64	63		1.001	2.629	293
167	26.539	26.812		0.16	0.16	1.33	1.07	0.24	76	76	63	1.87	1.30	65	0.013	103	103	109.3	0.00	0.30		111.1	172.4	170.9	60.8	171.9	98	64	64	63		1.001	2.471	275
168	26.698	26.973		0.16	0.16	1.34	1.07	0.24	76	76	63	1.88	1.30	65	0.014	99	100	109.1	0.18	0.32		111.0	172.3	170.8	60.7	171.7	97	64	64	63		1.001	2.629	292
169	26.858	27.135		0.16	0.16	1.34	1.07	0.24	76	76	63	1.89	1.30	65	0.015	96	97	109.1	0.01	0.32		110.7	172.2	170.7	60.7	171.4	97	64	64	63		1.001	2.630	291
170	27.018	27.296		0.16	0.16	1.34	1.07	0.24	76	76	63	1.89	1.30	65	0.015	96	96	109.2	-0.10	0.33		111.0	172.0	170.5	60.6	171.6	96	64	64	63		1.001	2.790	310
171	27.178	27.456		0.16	0.16	1.34	1.07	0.24	76	76	63	1.89	1.30	65	0.014	100	99	109.1	0.11	0.28		110.8	171.9	170.4	60.6	171.4	95	64	64	63		1.001	2.316	257
172	27.338	27.618		0.16	0.16	1.34	1.07	0.24	76	76	63	1.89	1.40	65	0.016	93	94	109.1	-0.07	0.33		110.8	171.8	170.3	60.5	171.3	95	64	64	63		1.001	2.790	309
173	27.498	27.780		0.16	0.16	1.34	1.07	0.24	76	76	62	1.87	1.40	65	0.014	100	100	109.2	-0.10	0.33		110.6	171.7	170.2	60.5	171.2	94	64	64	62		1.001	2.790	309
174	27.658	27.940		0.16	0.16	1.34	1.07	0.24	76	76	62	1.89	1.30	65	0.016	93	93	109.2	0.09	0.32		110.6	171.5	170.0	60.4	171.0	93	64	64	62		1.001	2.631	291
175	27.818	28.102		0.16	0.16	1.34	1.08	0.24	76	76	62	1.88	1.30	65	0.012	108	108	109.2	-0.06	0.28		110.6	171.4	169.9	60.3	170.9	93	64	64	62		1.001	2.322	257
176	27.978	28.264		0.16	0.16	1.34	1.08	0.24	76	76	62	1.89	1.30	65	0.014	100	100	109.1	0.09	0.28		110.5	171.3	169.8	60.3	170.8	92	64	64	62		1.001	2.331	256

Elapsed Time	Particulate Sampling Data																	Fuel Weight, lb		Flow, gpm		Temperature Data, oF													
	Gas Meter Cubic Feet (1)	Gas Meter Cubic Feet (2)	Gas Meter Cubic Feet (amb)	Sample Rate, cfm (1)	Sample Rate, cfm (2)	Orifice dH (1)	Orifice dH (2)	Orifice dH (amb)	Meter oF (1)	Meter oF (2)	Meter oF (amb)	Meter Vac. in. Hg. (1)	Meter Vac. in. Hg. (2)	Dilution Tunnel Temp.	Dilution Tunnel dP	Pro. Rate (%) (1)	Pro. Rate (%) (2)	Scale Reading	Weight Change	Load Side Liquid Flow Rate	Boiler Side Liquid Flow Rate (optional)	Thermopile ΔT	Boiler to Heat Exch. Temp.	Heat Exch to Boiler Temp.	Inlet Load Temp.	Outlet Load Temp.	Stack	Filter (1)	Filter (2)	Ambient		Specific Heat of Inlet Water (BTU/lb-°F)	Mass Flow Rate of Inlet Water (lb/min)	Heat Output, Btu
177	28.137	28.425		0.16	0.16	1.33	1.07	0.24	76	76	62	1.89	1.30	65	0.014	99	100	109.3	-0.12	0.35		110.3	171.2	169.6	60.3	170.5	92	63	64	62		1.001	2.952	326
178	28.297	28.586		0.16	0.16	1.34	1.07	0.24	76	76	62	1.88	1.30	65	0.014	100	100	109.2	0.03	0.30		110.3	171.0	169.5	60.2	170.5	91	63	64	62		1.001	2.499	276
179	28.457	28.747		0.16	0.16	1.34	1.07	0.24	76	76	62	1.89	1.30	64	0.015	96	96	109.1	0.07	0.34		110.3	170.9	169.4	60.2	170.5	91	63	63	62		1.001	2.817	311
180	28.617	28.909		0.16	0.16	1.33	1.08	0.24	76	76	62	1.88	1.30	64	0.015	96	97	109.0	0.10	0.32		110.2	170.8	169.3	60.2	170.3	90	63	63	62		1.001	2.633	290
181	28.776	29.070		0.16	0.16	1.34	1.07	0.24	76	76	62	1.87	1.30	65	0.014	99	100	109.2	-0.13	0.33		110.0	170.7	169.2	60.1	170.2	90	63	63	62		1.001	2.750	303
182	28.936	29.231		0.16	0.16	1.33	1.08	0.24	76	75	62	1.88	1.30	64	0.013	103	103	109.3	-0.09	0.30		110.0	170.5	169.0	60.1	170.1	89	63	63	62		1.001	2.495	275
183	29.096	29.392		0.16	0.16	1.34	1.08	0.24	76	75	62	1.89	1.30	64	0.014	100	100	109.1	0.13	0.30		109.8	170.4	168.9	60.1	169.9	89	63	63	62		1.001	2.475	272
184	29.256	29.554		0.16	0.16	1.34	1.08	0.24	76	76	62	1.88	1.30	64	0.014	100	100	109.2	-0.08	0.35		109.7	170.2	168.7	60.1	169.8	89	63	63	62		1.001	2.953	324
185	29.416	29.715		0.16	0.16	1.34	1.08	0.24	76	75	62	1.87	1.30	64	0.013	103	103	109.1	0.14	0.30		109.6	170.1	168.6	60.1	169.7	88	63	63	62		1.001	2.475	272
186	29.576	29.876		0.16	0.16	1.34	1.08	0.24	76	75	62	1.88	1.30	64	0.014	100	100	109.0	0.10	0.32		109.5	170.0	168.5	60.1	169.6	88	63	63	62		1.001	2.634	289
187	29.736	30.038		0.16	0.16	1.34	1.07	0.24	76	75	62	1.90	1.40	67	0.014	100	101	108.9	0.10	0.32		109.4	169.9	168.4	60.0	169.4	127	63	63	62		1.001	2.633	288
188	29.896	30.199		0.16	0.16	1.34	1.07	0.24	76	75	63	1.89	1.30	70	0.015	97	97	109.1	-0.18	0.34		109.2	169.7	168.2	60.0	169.2	139	63	63	63		1.001	2.791	305
189	30.056	30.360		0.16	0.16	1.34	1.07	0.24	76	75	62	1.90	1.30	67	0.014	100	100	108.9	0.17	0.32		109.1	169.6	168.1	60.0	169.1	130	63	63	62		1.001	2.633	288
190	30.216	30.521		0.16	0.16	1.34	1.08	0.24	76	75	62	1.89	1.30	67	0.016	93	93	109.0	-0.13	0.32		108.9	169.5	168.0	60.0	168.9	120	63	63	62		1.001	2.632	287
191	30.376	30.684		0.16	0.16	1.33	1.08	0.24	76	75	62	1.88	1.30	65	0.015	96	98	109.0	0.03	0.32		109.0	169.4	167.9	60.0	168.9	113	63	63	62		1.001	2.632	287
192	30.535	30.844		0.16	0.16	1.34	1.07	0.24	76	75	62	1.87	1.30	65	0.014	99	99	109.1	-0.08	0.32		108.8	169.2	167.7	60.0	168.8	109	63	63	62		1.001	2.634	287
193	30.695	31.005		0.16	0.16	1.34	1.08	0.24	76	75	62	1.88	1.30	65	0.015	96	96	108.9	0.16	0.34		108.6	169.1	167.6	60.1	168.7	106	63	63	62		1.001	2.794	304
194	30.855	31.167		0.16	0.16	1.33	1.08	0.24	76	75	62	1.89	1.30	65	0.015	96	97	109.0	-0.06	0.35		108.4	169.0	167.6	60.2	168.6	103	63	63	62		1.001	2.956	321
195	31.014	31.329		0.16	0.16	1.34	1.07	0.24	76	75	62	1.88	1.30	65	0.014	99	100	109.0	-0.03	0.32		108.2	168.9	167.4	60.3	168.5	101	63	63	62		1.001	2.626	284
196	31.174	31.489		0.16	0.16	1.34	1.08	0.24	76	75	62	1.87	1.30	66	0.014	100	99	109.1	-0.12	0.32		107.8	168.8	167.3	60.4	168.2	99	63	63	62		1.001	2.631	284
197	31.334	31.651		0.16	0.16	1.34	1.07	0.24	76	75	63	1.89	1.30	66	0.016	93	94	108.9	0.19	0.28		107.7	168.7	167.2	60.6	168.3	98	63	63	63		1.001	2.318	250
198	31.494	31.813		0.16	0.16	1.34	1.07	0.24	76	75	63	1.89	1.30	66	0.013	103	104	109.0	-0.05	0.33		107.4	168.5	167.1	60.8	168.1	96	63	63	63		1.001	2.770	298
199	31.654	31.974		0.16	0.16	1.35	1.07	0.24	76	75	63	1.88	1.30	66	0.016	93	93	109.1	-0.10	0.35		107.1	168.4	167.0	60.9	168.1	95	63	63	63		1.001	2.904	312
200	31.814	32.134		0.16	0.16	1.34	1.07	0.24	76	75	63	1.88	1.30	66	0.015	96	96	109.0	0.06	0.32		106.9	168.3	166.8	61.0	167.9	94	63	63	63		1.001	2.631	281
201	31.974	32.295		0.16	0.16	1.34	1.08	0.24	76	75	63	1.89	1.30	66	0.014	100	100	109.1	-0.03	0.30		106.5	168.2	166.7	61.1	167.6	94	63	63	63		1.001	2.470	263
202	32.134	32.458		0.16	0.16	1.34	1.07	0.24	76	75	63	1.88	1.30	67	0.013	104	105	109.0	0.03	0.30		106.4	168.1	166.6	61.3	167.6	93	63	63	63		1.001	2.470	263
203	32.294	32.618		0.16	0.16	1.33	1.07	0.24	76	75	63	1.90	1.30	67	0.016	93	93	108.9	0.14	0.33		106.1	167.9	166.5	61.4	167.5	92	63	63	63		1.001	2.769	296
204	32.454	32.779		0.16	0.16	1.33	1.08	0.24	76	75	63	1.89	1.30	67	0.015	96	97	108.9	-0.03	0.30		105.8	167.8	166.4	61.5	167.3	92	63	63	63		1.001	2.470	262
205	32.613	32.941		0.16	0.16	1.33	1.08	0.24	76	75	63	1.88	1.30	67	0.014	99	101	109.1	-0.15	0.33		105.6	167.7	166.2	61.6	167.3	91	63	64	63		1.001	2.786	295
206	32.773	33.102		0.16	0.16	1.34	1.07	0.24	76	75	63	1.89	1.30	67	0.014	100	100	108.9	0.17	0.30		105.4	167.5	166.1	61.7	167.2	91	63	64	63		1.001	2.473	261
207	32.932	33.263		0.16	0.16	1.34	1.07	0.24	76	75	63	1.87	1.30	67	0.013	103	104	108.8	0.11	0.32		105.2	167.4	166.0	61.9	167.0	90	64	64	63		1.001	2.626	276
208	33.092	33.424		0.16	0.16	1.33	1.07	0.24	76	75	63	1.89	1.30	67	0.014	100	100	108.9	-0.13	0.33		105.0	167.3	165.9	62.0	166.9	90	64	64	63		1.001	2.784	293
209	33.252	33.585		0.16	0.16	1.34	1.07	0.24	76	75	63	1.88	1.30	67	0.014	100	100	109.0	-0.09	0.33		104.8	167.2	165.8	62.1	166.8	90	64	64	63		1.001	2.785	292
210	33.411	33.746		0.16	0.16	1.34	1.07	0.24	76	75	63	1.89	1.30	67	0.013	103	104	109.0	0.04	0.32		104.5	167.0	165.6	62.2	166.7	89	64	64	63		1.001	2.627	275
211	33.571	33.906		0.16	0.16	1.34	1.08	0.24	76	75	63	1.88	1.30	67	0.013	104	103	109.0	0.00	0.30		104.2	166.9	165.5	62.2	166.5	89	64	64	63		1.001	2.466	257
212	33.731	34.068		0.16	0.16	1.34	1.07	0.24	76	75	63	1.88	1.30	68	0.016	93	94	109.0	-0.02	0.28		104.0	166.8	165.4	62.3	166.3	88	64	64	63		1.001	2.310	240
213	33.891	34.229		0.16	0.16	1.34	1.07	0.24	76	75	63	1.88	1.30	68	0.013	104	104	108.8	0.16	0.32		103.9	166.7	165.3	62.4	166.3	88	64	64	63		1.001	2.627	273
214	34.051	34.390		0.16	0.16	1.33	1.07	0.24	76	75	64	1.89	1.30	70	0.015	97	97	109.1	-0.23	0.32		103.6	166.6	165.2	62.5	166.0	88	64	64	64		1.001	2.629	273
215	34.211	34.551		0.16	0.16	1.34	1.07	0.24	76	75	64	1.88	1.40	68	0.015	96	97	108.9	0.17	0.33		103.5	166.5	165.0	62.5	166.1	87	64	64	64		1.001	2.788	289
216	34.371	34.713		0.16	0.16	1.33	1.07	0.24	76	75	64	1.88	1.30	68	0.014	100	101	109.0	-0.14	0.30		103.3	166.3	165.0	62.6	165.9	87	64	64	64		1.001	2.482	257
217	34.530	34.873		0.16	0.16	1.33	1.07	0.24	76	75	64	1.87	1.30	67	0.015	96	96	109.0	0.00	0.31		103.1	166.2	164.8	62.7	165.8	88	64	64	64		1.001	2.613	270
218	34.689	35.034		0.16	0.16	1.34	1.08	0.24	76	75	64	1.89	1.30	67	0.014	99	100	108.9	0.11	0.32		102.9	166.1	164.7	62.6	165.5	87	64	64	64		1.001	2.625	270
219	34.849	35.195		0.16	0.16	1.33	1.07	0.24	76	76	64	1.88	1.40	71	0.013	104	104	108.8	0.08	0.30		103.1	166.0	164.6	62.5	165.5	124	64	65	64		1.001	2.471	255
220	35.009	35.356		0.16	0.16	1.34	1.07	0.24	76	76	64	1.88	1.30	69	0.014	100	100	108.7	0.15	0.33		103.1	165.8	164.4	62.3	165.5	132	64	65	64		1.001	2.776	287
221	35.168	35.517		0.16	0.16	1.34	1.07	0.24	76	76	64	1.89	1.30	67	0.014	99	100	108.9	-0.20	0.33		103.1	165.7	164.3	62.2	165.2	121	64	64	64		1.001	2.788	288
222	35.328	35.677		0.16	0.16	1.33	1.07	0.24	76	76	63	1.88	1.30	67	0.014	100	99	108.8	0.11	0.32		103.1	165.6	164.2	62.0	165.1	113	64	64	63		1.001	2.626	271
223	35.488	35.839		0.16	0.16	1.34	1.07	0.24	76	76	63	1.89	1.30	66	0.012	108	108	108.8	-0.07	0.32		103.1	165.5	164.1	61.9	165.0	109	64	64	63		1.001	2.626	271
224	35.647	36.000		0.16	0.16	1.34	1.07	0.24	76	76	63	1.89	1.30	66	0.014	99	100	108.8	0.08	0.32		103.1	165.3	163.9	61.8	164.8	105	64	64	63		1.001	2.628	271
225	35.807	36.160		0.16	0.16	1.34	1.07	0.24	76	76	63	1.88	1.30	66	0.016	93	93	108.8	0.01	0.30		103.1	165.2	163.8	61.7	164.8	103	64	64	63		1.001	2.467	255
226	35.968	36.322		0.16	0.16	1.34	1.08	0.24	76	76	63	1.88	1.40	66	0.013	104	104	108.7	0.09	0.33		103.1	165.0	163.7	61.6	164.7	101	64	64	63		1.001	2.786	288
227	36.128	36.483		0.16	0.16	1.33	1.07	0.24	76	76	63	1.89	1.30	66	0.015	96	96	108.7	-0.05	0.33		102.8	164.9	163.6	61.5	164.3	99	64	64	63		1.001	2.788	287
228	36.287	36.644		0.16	0.16	1.34	1.07	0.24	76	76	63	1.89	1.30	66	0.014	99	100	108.8	-0.03	0.33		103.0	164.8	163.4	61.4	164.4	97	64	64	63		1.001	2.787	287
229	36.447	36.805		0.16	0.16	1.33	1.07	0.24	76	76	63	1.88	1.40	66	0.013	103	103	108.9	-0.12	0.32		103.0	164.7	163.3	61.3	164.3	96	64	64	63		1.001	2.629	271
230	36.607	36.967		0.16	0.16	1.33	1.07	0.24	76	76	63	1.90	1.30	66	0.014	100	100	108.6	0.23	0.32		102.9	164.6	163.2	61.2	164.2	95	64	64	63		1.001	2.631	271
231	36.766	37.128		0.16	0.16	1.34	1.07	0.24	76	76	63	1.88	1.30	65	0.015	96	96	108.7	-0.04	0.32		102.9	164.4	163.1	61.2	164.0	94	64	64	63		1.001	2.630	271
232	36.926	37.289		0.16	0.16	1.33	1.08	0.24	76	76	63	1.89	1.30	65	0.014	100	100	108.8	-0.09	0.35		102.9	164.3	163.0	61.1	164.0	93	64	64	63		1.001	2.947	303
233	37.086	37.450		0.16	0.16	1.34	1.08	0.24	76	76	63	1.89	1.30	65	0.014	100	100	108.8	-0.01	0.32		102.7	164.2	162.8	61.0	163.8	93	64	64	63		1.001	2.630	271
234	37.246	37.612		0.16	0.16	1.34	1.08	0.24	76	76	63	1.88	1.40	65	0.014	100	100	108.8	-0.01	0.30		102.7	164.1	162.7	61.0	163.7	92	64	64	63		1.001	2.473	254
235	37.405	37.773		0.16	0.16	1.34	1.07	0.24	76	76	63	1.88	1.30	65	0.016	93	93	108.7	0.05	0.35		102.7	163.9	162.6	60.9	163.6	91	64	64	63		1.001	2.929	301
236	37.565	37.934		0.16	0.16	1.34	1.07	0.24	76	76	62	1.89	1.30	65	0.014	100	100	108.7	0.06	0.33		102.6	163.8	162.5	60.9	163.5	91	64	64	62		1.001	2.771	285
237	37.725	38.096		0.16	0.16	1.34	1.07	0.24	76	76	62	1.89	1.40	65	0.015	96	97	108.7	-0.01	0.32		102.4	163.7	162.3	60.8	163.3	90	64	64	62		1.001	2.635	270
238	37.885	38.257		0.16	0.16	1.34	1.07	0.24	76	76	62	1.89	1.30	65	0.014	100	100	108.8	-0.09	0.30		102.5	163.6	162.2	60.8	163.2	89	64	64	62		1.001	2.474	254

Elapsed Time	Particulate Sampling Data																	Fuel Weight, lb		Flow, gpm		Temperature Data, oF													
	Gas Meter Cubic Feet (1)	Gas Meter Cubic Feet (2)	Gas Meter Cubic Feet (amb)	Sample Rate, cfm (1)	Sample Rate, cfm (2)	Orifice dH (1)	Orifice dH (2)	Orifice dH (amb)	Meter oF (1)	Meter oF (2)	Meter oF (amb)	Meter Vac. in. Hg. (1)	Meter Vac. in. Hg. (2)	Dilution Tunnel Temp.	Dilution Tunnel dP	Pro. Rate (%) (1)	Pro. Rate (%) (2)	Scale Reading	Weight Change	Load Side Liquid Flow Rate	Boiler Side Liquid Flow Rate (optional)	Thermopile ΔT	Boiler to Heat Exch. Temp.	Heat Exch to Boiler Temp.	Inlet Load Temp.	Outlet Load Temp.	Stack	Filter (1)	Filter (2)	Ambient		Specific Heat of Inlet Water (BTU/lb-°F)	Mass Flow Rate of Inlet Water (lb/min)	Heat Output, Btu
239	38.046	38.418		0.16	0.16	1.35	1.07	0.24	76	76	62	1.89	1.30	65	0.016	94	93	108.8	0.03	0.33		102.4	163.5	162.1	60.7	163.1	89	64	64	62		1.001	2.790	286
240	38.206	38.579		0.16	0.16	1.34	1.08	0.24	76	76	62	1.89	1.30	65	0.015	96	96	108.7	0.01	0.34		102.3	163.3	162.0	60.7	162.9	88	63	64	62		1.001	2.791	286
241	38.366	38.741		0.16	0.16	1.34	1.07	0.24	76	76	62	1.89	1.30	65	0.012	108	108	108.8	-0.01	0.30		102.2	163.2	161.8	60.6	162.9	88	63	63	62		1.001	2.472	253
242	38.526	38.902		0.16	0.16	1.33	1.07	0.24	76	75	62	1.89	1.30	66	0.014	100	100	108.7	0.05	0.30		102.1	163.1	161.7	60.6	162.7	88	63	63	62		1.001	2.475	253
243	38.686	39.063		0.16	0.16	1.33	1.08	0.24	76	76	62	1.87	1.30	66	0.012	108	108	108.7	-0.04	0.32		102.1	162.9	161.6	60.5	162.6	88	63	64	62		1.001	2.633	269
244	38.846	39.224		0.16	0.16	1.33	1.08	0.24	76	75	62	1.89	1.30	65	0.015	96	96	108.7	0.06	0.34		102.0	162.8	161.5	60.5	162.4	87	63	63	62		1.001	2.793	285
245	39.005	39.386		0.16	0.16	1.33	1.07	0.24	76	75	62	1.88	1.30	65	0.014	99	100	108.7	0.03	0.32		101.9	162.7	161.3	60.4	162.3	87	63	63	62		1.001	2.631	269
246	39.165	39.547		0.16	0.16	1.34	1.07	0.24	76	75	62	1.89	1.30	65	0.014	100	100	108.9	-0.23	0.32		101.8	162.6	161.2	60.4	162.2	87	63	63	62		1.001	2.637	269
247	39.325	39.708		0.16	0.16	1.34	1.08	0.24	76	75	62	1.88	1.40	66	0.014	100	100	108.6	0.28	0.28		101.4	162.5	161.1	60.4	161.8	92	63	63	62		1.001	2.318	235
248	39.485	39.870		0.16	0.16	1.34	1.07	0.24	76	75	62	1.89	1.40	71	0.015	97	97	108.6	-0.03	0.30		101.4	162.3	161.0	60.5	162.0	126	63	64	62		1.001	2.476	251
249	39.644	40.031		0.16	0.16	1.34	1.07	0.24	76	75	62	1.89	1.40	72	0.015	96	97	108.3	0.31	0.34		101.2	162.2	160.8	60.6	161.8	143	64	64	62		1.001	2.791	283
250	39.804	40.192		0.16	0.16	1.34	1.07	0.24	76	75	62	1.90	1.40	73	0.015	97	97	108.2	0.11	0.32		100.9	162.1	160.7	60.7	161.7	153	64	64	62		1.001	2.631	266
251	39.964	40.353		0.16	0.16	1.34	1.07	0.24	76	75	62	1.89	1.40	74	0.015	97	97	107.9	0.33	0.33		100.7	162.0	160.6	60.9	161.5	162	64	64	62		1.001	2.788	281
252	40.124	40.515		0.16	0.16	1.34	1.07	0.24	76	75	63	1.90	1.40	76	0.013	104	105	107.4	0.45	0.32		100.5	161.9	160.5	61.0	161.5	179	64	64	63		1.001	2.630	265
253	40.284	40.675		0.16	0.16	1.34	1.07	0.24	76	75	62	1.91	1.40	80	0.015	98	97	107.1	0.36	0.33		100.3	162.0	160.6	61.1	161.5	208	64	65	62		1.001	2.789	280
254	40.444	40.835		0.16	0.16	1.34	1.07	0.24	76	75	63	1.91	1.40	83	0.013	105	105	106.5	0.56	0.30		100.5	162.4	161.0	61.3	161.7	233	65	65	63		1.001	2.470	249
255	40.603	40.996		0.16	0.16	1.33	1.07	0.24	76	75	63	1.91	1.40	86	0.015	98	98	106.1	0.42	0.30		100.8	162.9	161.4	61.4	162.2	255	65	66	63		1.001	2.465	249
256	40.763	41.157		0.16	0.16	1.33	1.07	0.24	76	75	63	1.92	1.40	89	0.015	98	99	105.5	0.58	0.32		101.1	163.4	162.0	61.5	162.6	276	65	66	63		1.001	2.643	268
257	40.922	41.316		0.16	0.16	1.33	1.07	0.24	76	75	63	1.92	1.40	92	0.015	98	98	105.0	0.52	0.30		101.6	164.0	162.6	61.6	163.2	294	66	66	63		1.001	2.468	251
258	41.081	41.477		0.16	0.16	1.34	1.07	0.24	76	75	63	1.90	1.40	94	0.013	106	106	104.6	0.42	0.35		102.1	165.1	163.6	61.8	163.9	307	66	67	63		1.001	2.947	301
259	41.240	41.638		0.16	0.16	1.33	1.06	0.24	76	75	63	1.90	1.40	96	0.013	106	106	104.0	0.52	0.33		103.1	166.0	164.6	61.9	164.9	316	67	67	63		1.001	2.788	288
260	41.399	41.798		0.16	0.16	1.34	1.07	0.24	76	75	63	1.90	1.40	97	0.014	102	102	103.5	0.57	0.32		103.8	167.1	165.6	62.0	165.8	324	67	68	63		1.001	2.626	273
261	41.558	41.958		0.16	0.16	1.34	1.07	0.24	76	75	63	1.91	1.40	99	0.014	102	102	103.0	0.47	0.30		104.6	168.1	166.3	62.2	166.8	330	67	68	63		1.001	2.469	259
262	41.717	42.118		0.16	0.16	1.34	1.06	0.24	76	75	63	1.91	1.40	100	0.014	102	102	102.3	0.67	0.33		105.8	169.1	167.5	62.2	168.1	337	68	69	63		1.001	2.785	295
263	41.877	42.278		0.16	0.16	1.34	1.07	0.24	76	75	63	1.92	1.40	101	0.016	96	96	101.9	0.40	0.32		107.0	170.4	168.7	62.3	169.3	342	68	69	63		1.001	2.630	282
264	42.037	42.438		0.16	0.16	1.34	1.07	0.24	76	75	63	1.93	1.40	102	0.014	103	103	101.3	0.64	0.35		107.9	171.6	169.8	62.4	170.3	347	69	70	63		1.001	2.947	318
265	42.196	42.598		0.16	0.16	1.34	1.06	0.24	76	75	63	1.91	1.40	102	0.014	102	103	100.8	0.52	0.28		108.9	172.9	171.2	62.5	171.4	350	69	70	63		1.001	2.315	252
266	42.354	42.757		0.16	0.16	1.33	1.06	0.24	76	75	63	1.92	1.40	102	0.014	102	102	100.4	0.43	0.37		110.1	174.2	172.4	62.5	172.6	352	69	70	63		1.001	3.107	342
267	42.513	42.917		0.16	0.16	1.32	1.06	0.24	76	75	63	1.92	1.40	103	0.014	102	103	99.6	0.74	0.32		111.5	175.3	173.5	62.6	174.1	354	70	71	63		1.001	2.629	294
268	42.672	43.077		0.16	0.16	1.33	1.06	0.24	76	75	64	1.91	1.40	105	0.015	99	99	99.2	0.47	0.32		112.6	176.9	175.0	62.7	175.3	356	70	71	64		1.001	2.627	296
269	42.830	43.236		0.16	0.16	1.33	1.06	0.24	76	75	64	1.93	1.40	104	0.014	102	102	98.7	0.47	0.35		113.9	178.4	176.5	62.8	176.7	358	71	71	64		1.001	2.946	336
270	42.989	43.396		0.16	0.16	1.33	1.06	0.24	76	75	64	1.93	1.40	105	0.014	103	103	98.1	0.60	0.33		115.3	179.7	177.7	62.8	178.2	362	71	72	64		1.001	2.788	322
271	43.148	43.555		0.16	0.16	1.33	1.06	0.24	76	76	64	1.93	1.40	106	0.014	103	102	97.4	0.65	0.35		117.0	181.0	179.1	62.8	179.8	366	71	72	64		1.001	2.945	345
272	43.307	43.714		0.16	0.16	1.33	1.06	0.24	76	75	64	1.92	1.40	107	0.014	103	102	97.2	0.26	0.35		118.1	182.4	180.5	62.8	180.8	369	72	72	64		1.001	2.942	348
273	43.466	43.874		0.16	0.16	1.33	1.05	0.24	76	76	64	1.92	1.40	89	0.012	109	109	96.9	0.23	0.33		119.6	183.8	181.9	62.6	182.2	345	71	72	64		1.001	2.784	333
274	43.625	44.034		0.16	0.16	1.32	1.05	0.24	76	76	64	1.91	1.40	82	0.016	94	94	96.9	0.04	0.35		121.0	184.7	182.8	62.5	183.4	312	70	71	64		1.001	2.944	357
275	43.784	44.193		0.16	0.16	1.32	1.06	0.24	76	76	64	1.91	1.40	78	0.015	97	96	96.8	0.13	0.35		121.7	185.2	183.3	62.3	184.0	293	69	70	64		1.001	2.947	359
276	43.943	44.354		0.16	0.16	1.33	1.06	0.24	76	76	64	1.91	1.40	75	0.015	97	97	96.6	0.20	0.33		122.6	185.6	183.8	62.1	184.8	279	69	69	64		1.001	2.789	342
277	44.102	44.513		0.16	0.16	1.33	1.06	0.24	76	76	64	1.90	1.40	74	0.015	96	96	96.7	-0.12	0.33		123.1	186.0	184.1	62.0	185.2	268	68	68	64		1.001	2.762	341
278	44.261	44.673		0.16	0.16	1.33	1.06	0.24	76	76	63	1.90	1.40	73	0.013	103	103	96.6	0.07	0.33		123.3	186.3	184.4	61.9	185.2	258	68	68	63		1.001	2.788	344
279	44.421	44.834		0.16	0.16	1.33	1.07	0.24	76	76	63	1.90	1.40	73	0.014	100	100	96.4	0.24	0.34		124.0	186.5	184.6	61.8	185.8	249	67	68	63		1.001	2.792	347
280	44.580	44.995		0.16	0.16	1.33	1.06	0.24	76	76	63	1.89	1.40	72	0.014	100	100	96.5	-0.09	0.33		124.1	186.7	184.8	61.7	185.8	242	67	68	63		1.001	2.787	346
281	44.740	45.155		0.16	0.16	1.34	1.07	0.24	76	76	63	1.90	1.40	71	0.014	100	99	96.5	0.01	0.33		124.5	186.8	185.0	61.6	186.1	235	67	68	63		1.001	2.784	347
282	44.900	45.316		0.16	0.16	1.34	1.07	0.24	76	76	63	1.89	1.40	71	0.016	94	94	96.3	0.11	0.32		124.9	186.9	185.1	61.5	186.4	229	67	67	63		1.001	2.626	328
283	45.060	45.477		0.16	0.16	1.33	1.07	0.24	76	76	63	1.89	1.40	71	0.014	100	100	96.5	-0.14	0.32		124.8	187.0	185.1	61.4	186.2	223	67	67	63		1.001	2.629	328
284	45.219	45.638		0.16	0.16	1.33	1.07	0.24	76	76	63	1.90	1.40	70	0.014	99	100	96.4	0.08	0.33		125.0	187.1	185.3	61.3	186.3	218	67	67	63		1.001	2.785	348
285	45.379	45.798		0.16	0.16	1.34	1.07	0.24	76	76	63	1.91	1.40	69	0.013	104	103	96.6	-0.17	0.32		125.2	187.2	185.4	61.2	186.4	215	66	67	63		1.001	2.629	329
286	45.538	45.960		0.16	0.16	1.32	1.07	0.24	76	76	63	1.90	1.40	68	0.016	93	94	96.4	0.16	0.37		125.6	187.2	185.4	61.1	186.7	212	66	67	63		1.001	3.107	391
287	45.698	46.120		0.16	0.16	1.33	1.07	0.24	76	76	63	1.89	1.40	68	0.012	108	107	96.5	-0.07	0.33		125.4	187.3	185.5	61.0	186.4	208	66	66	63		1.001	2.789	350
288	45.857	46.281		0.16	0.16	1.33	1.07	0.24	76	76	62	1.91	1.40	67	0.013	103	103	96.3	0.13	0.37		125.5	187.4	185.5	61.0	186.5	204	66	66	62		1.001	3.108	391
289	46.017	46.442		0.16	0.16	1.34	1.07	0.24	76	76	62	1.90	1.40	67	0.014	100	100	96.3	0.07	0.32		125.7	187.4	185.5	60.9	186.6	200	66	66	62		1.001	2.631	331
290	46.176	46.603		0.16	0.16	1.33	1.07	0.24	76	76	63	1.91	1.40	67	0.014	99	100	96.3	-0.05	0.32		125.8	187.4	185.5	60.9	186.7	196	66	66	63		1.001	2.631	331
291	46.336	46.764		0.16	0.16	1.34	1.07	0.24	76	76	62	1.89	1.40	67	0.013	104	103	96.4	-0.02	0.34		125.8	187.4	185.5	60.8	186.6	192	65	66	62		1.001	2.792	352
292	46.496	46.925		0.16	0.16	1.34	1.07	0.24	76	76	62	1.90	1.40	67	0.013	104	103	96.3	0.04	0.34		125.7	187.3	185.5	60.8	186.5	188	65	66	62		1.001	2.792	351
293	46.655	47.087		0.16	0.16	1.34	1.07	0.24	76	76	62	1.89	1.40	67	0.014	99	100	96.5	-0.20	0.32		126.0	187.3	185.5	60.7	186.7	185	65	65	62		1.001	2.631	332
294	46.816	47.247		0.16	0.16	1.33	1.07	0.24	76	76	62	1.91	1.40	67	0.013	104	103	96.4	0.14	0.37		125.9	187.3	185.5	60.7	186.6	181	65	65	62		1.001	3.111	392
295	46.975	47.407		0.16	0.16	1.33	1.07	0.24	76	76	62	1.89	1.40	66	0.013	103	103	96.4	0.00	0.34		125.8	187.3	185.5	60.6	186.5	178	65	65	62		1.001	2.791	352
296	47.135	47.569		0.16	0.16	1.34	1.07	0.24	76	76	62	1.90	1.40	66	0.013	103	104	96.4	-0.03	0.35		125.9	187.3	185.4	60.6	186.5	174	65	65	62		1.001	2.950	372
297	47.295	47.730		0.16	0.16	1.33	1.07	0.24	76	76	62	1.89	1.40	66	0.012	108	108	96.2	0.16	0.34		126.1	187.3	185.4	60.6	186.7	171	65	65	62		1.001	2.793	353
298	47.454	47.891		0.16	0.16	1.33	1.07	0.24	76	76	62	1.89	1.40	66	0.015	96	96	96.4	-0.20	0.31		125.8	187.2	185.3	60.5	186.4	168	64	65	62		1.001	2.591	326
299	47.614	48.052		0.16	0.16	1.33	1.07	0.24	76	76	62	1.88	1.40	66	0.014	100	100	96.3	0.16	0.32		125.9	187.1	185.2	60.5	186.3	166	64	65	62		1.001	2.631	332
300	47.773	48.214		0.16	0.16	1.34	1.07	0.24	76	76	62	1.89	1.40	66	0.015	96	97	96.4	-0.12	0.34		125.7	187.0	185.1	60.5	186.2	162	64	65	62		1.001	2.817	355

Elapsed Time	Particulate Sampling Data																	Fuel Weight, lb		Flow, gpm		Temperature Data, oF												
	Gas Meter Cubic Feet (1)	Gas Meter Cubic Feet (2)	Gas Meter Cubic Feet (amb)	Sample Rate, cfm (1)	Sample Rate, cfm (2)	Orifice dH (1)	Orifice dH (2)	Orifice dH (amb)	Meter oF (1)	Meter oF (2)	Meter oF (amb)	Meter Vac. in. Hg. (1)	Meter Vac. in. Hg. (2)	Dilution Tunnel Temp.	Dilution Tunnel dP	Pro. Rate (%) (1)	Pro. Rate (%) (2)	Scale Reading	Weight Change	Load Side Liquid Flow Rate	Boiler Side Liquid Flow Rate (optional)	Thermopile ΔT	Boiler to Heat Exch. Temp.	Heat Exch to Boiler Temp.	Inlet Load Temp.	Outlet Load Temp.	Stack	Filter (1)	Filter (2)	Ambient		Specific Heat of Inlet Water (BTU/lb-°F)	Mass Flow Rate of Inlet Water (lb/min)	Heat Output, Btu
301	47.933	48.374		0.16	0.16	1.33	1.07	0.24	76	76	62	1.89	1.40	66	0.015	96	96	96.4	0.00	0.34		126.0	187.1	185.2	60.4	186.4	160	64	64	62		1.001	2.792	352
302	48.093	48.535		0.16	0.16	1.33	1.07	0.24	76	75	62	1.89	1.40	66	0.015	96	96	96.4	-0.01	0.34		125.8	187.0	185.1	60.4	186.2	157	64	64	62		1.001	2.832	357
303	48.252	48.696		0.16	0.16	1.34	1.07	0.24	76	75	62	1.91	1.40	66	0.014	99	100	96.4	0.06	0.35		125.9	186.9	185.1	60.3	186.2	155	64	64	62		1.001	2.942	371
304	48.412	48.858		0.16	0.16	1.34	1.07	0.24	76	75	62	1.90	1.40	65	0.014	100	100	96.5	-0.11	0.34		126.0	186.8	185.0	60.3	186.3	152	64	64	62		1.001	2.793	352
305	48.572	49.018		0.16	0.16	1.34	1.07	0.24	76	75	62	1.90	1.40	65	0.016	93	93	96.5	-0.09	0.34		125.6	186.8	184.9	60.3	185.9	150	64	64	62		1.001	2.793	351
306	48.732	49.180		0.16	0.16	1.34	1.08	0.24	76	75	62	1.90	1.40	65	0.014	100	100	96.4	0.16	0.34		125.8	186.7	184.9	60.2	186.0	148	64	64	62		1.001	2.800	353
307	48.892	49.341		0.16	0.16	1.33	1.07	0.24	76	75	62	1.89	1.40	65	0.013	103	103	96.3	0.05	0.34		125.7	186.6	184.7	60.2	185.9	145	63	64	62		1.001	2.795	352
308	49.052	49.502		0.16	0.16	1.34	1.07	0.24	76	75	62	1.91	1.40	65	0.015	96	96	96.4	-0.05	0.34		125.8	186.5	184.7	60.2	186.0	144	63	64	62		1.001	2.795	352
309	49.212	49.663		0.16	0.16	1.34	1.07	0.24	76	75	61	1.90	1.40	65	0.013	103	103	96.5	-0.07	0.32		125.4	186.4	184.6	60.1	185.6	141	63	64	61		1.001	2.636	331
310	49.371	49.824		0.16	0.16	1.33	1.08	0.24	76	75	61	1.90	1.40	65	0.014	99	100	96.4	0.03	0.35		125.6	186.4	184.6	60.1	185.7	139	63	64	61		1.001	2.951	371
311	49.531	49.986		0.16	0.16	1.33	1.07	0.24	76	75	61	1.89	1.40	65	0.015	96	97	96.5	-0.06	0.34		125.4	186.2	184.4	60.1	185.5	137	63	63	61		1.001	2.795	351
312	49.691	50.146		0.16	0.16	1.34	1.08	0.24	76	75	61	1.89	1.30	65	0.015	96	96	96.3	0.20	0.35		125.5	186.2	184.4	60.1	185.6	135	63	63	61		1.001	2.951	371
313	49.850	50.308		0.16	0.16	1.33	1.08	0.24	76	75	61	1.89	1.40	65	0.013	103	104	96.4	-0.11	0.34		125.5	186.1	184.3	60.0	185.5	134	63	63	61		1.001	2.796	351
314	50.010	50.469		0.16	0.16	1.33	1.07	0.24	76	75	61	1.89	1.30	65	0.014	100	100	96.4	0.03	0.34		125.3	186.0	184.2	59.9	185.2	132	63	63	61		1.001	2.793	350
315	50.169	50.630		0.16	0.16	1.33	1.06	0.24	76	75	61	1.90	1.40	75	0.014	100	101	96.1	0.27	0.37		125.3	186.0	184.2	59.9	185.2	155	64	64	61		1.001	3.118	391
316	50.329	50.790		0.16	0.16	1.34	1.07	0.24	76	75	61	1.91	1.40	76	0.013	104	104	95.9	0.16	0.36		125.4	185.7	183.9	59.9	185.3	186	64	64	61		1.001	2.958	372
317	50.489	50.951		0.16	0.16	1.34	1.08	0.24	76	75	62	1.90	1.40	67	0.013	104	104	96.0	-0.05	0.35		125.1	185.5	183.7	59.8	184.9	172	63	63	62		1.001	2.956	370
318	50.648	51.113		0.16	0.16	1.34	1.07	0.24	76	75	61	1.91	1.40	67	0.012	107	109	95.9	0.12	0.34		124.9	185.4	183.6	59.8	184.6	158	63	63	61		1.001	2.796	349
319	50.809	51.274		0.16	0.16	1.33	1.07	0.24	76	75	61	1.90	1.40	66	0.012	108	108	95.9	-0.04	0.34		125.0	185.4	183.5	59.7	184.7	150	63	63	61		1.001	2.798	350
320	50.969	51.435		0.16	0.16	1.34	1.08	0.24	76	75	61	1.88	1.30	65	0.015	96	96	96.0	-0.05	0.30		124.8	185.3	183.5	59.7	184.5	144	63	63	61		1.001	2.477	310
321	51.129	51.596		0.16	0.16	1.34	1.07	0.24	76	75	61	1.88	1.30	65	0.015	96	96	96.0	0.00	0.34		125.0	185.2	183.4	59.7	184.6	140	63	63	61		1.001	2.794	350
322	51.288	51.757		0.16	0.16	1.34	1.07	0.24	76	75	61	1.89	1.40	65	0.014	99	100	95.9	0.03	0.34		124.6	185.1	183.3	59.7	184.4	137	63	63	61		1.001	2.815	351
323	51.448	51.918		0.16	0.16	1.33	1.07	0.24	76	75	62	1.88	1.40	65	0.014	100	100	96.0	-0.02	0.36		124.4	185.0	183.2	59.8	184.3	134	63	63	62		1.001	2.974	370
324	51.608	52.079		0.16	0.16	1.33	1.07	0.24	75	75	62	1.89	1.40	65	0.013	104	103	95.9	0.05	0.35		124.3	184.9	183.0	59.9	184.3	132	63	63	62		1.001	2.926	364
325	51.767	52.241		0.16	0.16	1.34	1.07	0.24	75	75	62	1.88	1.40	66	0.015	96	97	95.9	0.01	0.34		124.0	184.9	183.0	60.1	184.1	129	63	63	62		1.001	2.817	350
326	51.927	52.402		0.16	0.16	1.33	1.07	0.24	75	75	62	1.88	1.40	66	0.013	104	104	95.9	-0.02	0.37		124.0	184.8	182.9	60.2	184.2	128	63	63	62		1.001	3.112	386
327	52.087	52.563		0.16	0.16	1.34	1.08	0.24	75	75	62	1.89	1.40	66	0.013	104	104	96.0	-0.13	0.35		123.6	184.7	182.8	60.4	184.0	126	63	63	62		1.001	2.951	365
328	52.246	52.724		0.16	0.16	1.33	1.07	0.24	75	75	62	1.90	1.30	66	0.013	103	104	96.0	0.08	0.32		123.5	184.5	182.7	60.5	184.0	125	63	63	62		1.001	2.633	326
329	52.406	52.885		0.16	0.16	1.34	1.07	0.24	75	75	63	1.90	1.40	67	0.015	97	97	96.1	-0.16	0.32		123.2	184.4	182.6	60.6	183.8	123	63	63	63		1.001	2.633	325
330	52.566	53.046		0.16	0.16	1.33	1.07	0.24	75	75	63	1.90	1.40	67	0.014	100	100	95.9	0.19	0.35		122.7	184.3	182.5	60.7	183.5	122	63	63	63		1.001	2.954	363
331	52.725	53.207		0.16	0.16	1.34	1.07	0.24	75	75	63	1.90	1.40	67	0.015	96	97	95.9	0.00	0.34		122.7	184.2	182.4	60.9	183.5	120	63	63	63		1.001	2.793	343
332	52.886	53.369		0.16	0.16	1.33	1.07	0.24	75	75	63	1.90	1.40	66	0.013	104	104	96.0	-0.04	0.35		122.4	184.1	182.3	61.0	183.4	119	63	63	63		1.001	2.954	362
333	53.046	53.529		0.16	0.16	1.33	1.07	0.24	75	75	63	1.89	1.40	66	0.014	100	99	96.0	0.01	0.37		122.3	184.0	182.2	61.0	183.3	117	63	63	63		1.001	3.109	381
334	53.205	53.690		0.16	0.16	1.34	1.07	0.24	75	75	63	1.91	1.40	66	0.014	99	100	96.0	-0.04	0.32		122.4	183.9	182.1	60.9	183.3	116	63	63	63		1.001	2.630	322
335	53.365	53.851		0.16	0.16	1.33	1.07	0.24	75	75	62	1.90	1.40	66	0.016	93	93	95.9	0.07	0.33		122.2	183.8	182.0	60.9	183.0	115	63	63	62		1.001	2.788	341
336	53.525	54.012		0.16	0.16	1.33	1.06	0.24	75	75	62	1.90	1.40	66	0.015	96	96	95.9	0.05	0.33		122.3	183.6	181.8	60.7	183.0	114	63	63	62		1.001	2.788	341
337	53.684	54.173		0.16	0.16	1.33	1.07	0.24	75	75	62	1.91	1.40	65	0.015	96	96	95.9	-0.03	0.32		122.3	183.5	181.6	60.6	182.9	113	63	63	62		1.001	2.633	322
338	53.844	54.334		0.16	0.16	1.34	1.07	0.24	75	75	62	1.90	1.40	65	0.012	108	108	96.0	-0.07	0.32		122.2	183.4	181.6	60.5	182.7	112	63	63	62		1.001	2.631	322
339	54.004	54.496		0.16	0.16	1.33	1.07	0.24	75	75	62	1.90	1.40	65	0.015	96	97	96.0	-0.04	0.32		122.5	183.3	181.5	60.4	182.9	111	63	63	62		1.001	2.633	323
340	54.163	54.656		0.16	0.16	1.34	1.07	0.24	75	75	62	1.90	1.30	65	0.015	96	96	96.1	-0.01	0.34		122.3	183.2	181.4	60.3	182.6	110	63	63	62		1.001	2.792	342
341	54.323	54.817		0.16	0.16	1.34	1.08	0.24	75	75	62	1.88	1.40	65	0.014	100	100	96.0	0.06	0.32		122.3	183.1	181.3	60.2	182.5	110	63	63	62		1.001	2.632	322
342	54.483	54.979		0.16	0.16	1.34	1.07	0.24	75	75	62	1.88	1.30	65	0.015	96	97	96.0	-0.02	0.32		122.2	183.0	181.2	60.1	182.3	108	63	63	62		1.001	2.635	322
343	54.642	55.140		0.16	0.16	1.34	1.07	0.24	75	75	62	1.88	1.40	65	0.014	99	100	96.0	0.01	0.32		122.2	182.9	181.0	60.0	182.2	108	63	63	62		1.001	2.635	323
344	54.802	55.301		0.16	0.16	1.34	1.07	0.24	75	75	62	1.89	1.30	65	0.014	100	100	95.9	0.07	0.35		122.1	182.7	180.9	59.9	182.0	107	63	63	62		1.001	2.951	361
345	54.962	55.462		0.16	0.16	1.33	1.07	0.24	75	75	62	1.90	1.40	65	0.014	100	100	96.0	-0.08	0.37		122.2	182.6	180.8	59.9	182.1	106	63	63	62		1.001	3.118	382
346	55.123	55.623		0.16	0.16	1.34	1.07	0.24	75	75	62	1.90	1.40	65	0.015	97	96	95.9	0.14	0.35		122.1	182.4	180.6	59.8	181.9	106	63	63	62		1.001	2.945	360
347	55.282	55.783		0.16	0.16	1.34	1.06	0.24	75	75	62	1.90	1.40	74	0.014	100	100	95.8	0.07	0.32		122.0	182.3	180.5	59.8	181.8	147	64	64	62		1.001	2.647	323
348	55.441	55.944		0.16	0.16	1.33	1.07	0.24	75	75	62	1.90	1.40	69	0.014	100	100	95.7	0.06	0.35		121.8	182.1	180.3	59.8	181.6	160	63	63	62		1.001	2.944	359
349	55.601	56.105		0.16	0.16	1.33	1.07	0.24	75	75	62	1.88	1.30	66	0.015	96	96	95.7	0.02	0.35		121.5	181.9	180.2	59.7	181.2	141	63	63	62		1.001	2.956	360
350	55.760	56.267		0.16	0.16	1.33	1.07	0.24	75	75	61	1.91	1.30	67	0.015	96	97	95.7	0.01	0.34		121.4	181.7	180.0	59.7	181.1	130	63	63	61		1.001	2.796	340
351	55.920	56.427		0.16	0.16	1.33	1.07	0.24	75	75	61	1.89	1.30	66	0.015	96	96	95.7	0.00	0.35		121.2	181.7	179.9	59.7	180.9	124	63	63	61		1.001	2.954	359
352	56.080	56.588		0.16	0.16	1.34	1.08	0.24	75	75	62	1.90	1.40	65	0.015	96	96	95.7	-0.02	0.37		121.3	181.6	179.8	59.7	180.9	119	63	63	62		1.001	3.113	378
353	56.239	56.750		0.16	0.16	1.34	1.07	0.24	75	75	62	1.90	1.30	65	0.014	99	100	95.7	0.02	0.35		121.2	181.4	179.6	59.7	180.9	116	63	63	62		1.001	2.956	359
354	56.399	56.911		0.16	0.16	1.34	1.07	0.24	75	75	62	1.90	1.40	65	0.014	100	100	95.7	-0.02	0.32		120.9	181.3	179.4	59.7	180.7	114	63	63	62		1.001	2.637	319
355	56.559	57.072		0.16	0.16	1.34	1.07	0.24	75	75	62	1.89	1.40	65	0.016	93	93	95.9	-0.14	0.34		120.6	181.1	179.3	59.8	180.5	112	63	63	62		1.001	2.796	338
356	56.719	57.233		0.16	0.16	1.34	1.08	0.24	75	75	62	1.89	1.40	65	0.015	96	96	95.7	0.14	0.34		120.4	181.0	179.2	59.9	180.3	111	63	63	62		1.001	2.797	337
357	56.879	57.395		0.16	0.16	1.34	1.07	0.24	75	75	62	1.90	1.40	65	0.015	96	97	95.7	0.04	0.34		120.3	180.9	179.1	60.1	180.4	110	63	63	62		1.001	2.795	337
358	57.039	57.555		0.16	0.16	1.33	1.07	0.24	75	75	62	1.90	1.30	66	0.014	100	99	95.7	-0.04	0.32		120.0	180.8	179.0	60.2	180.2	109	63	63	62		1.001	2.634	316
359	57.199	57.717		0.16	0.16	1.34	1.07	0.24	75	74	63	1.90	1.40	66	0.016	93	94	95.7	0.07	0.35		119.7	180.7	178.9	60.4	180.0	107	63	63	63		1.001	2.955	354
360	57.359	57.878		0.16	0.16	1.34	1.08	0.24	75	74	62	1.89	1.40	66	0.014	100	100	95.8	-0.15	0.35		119.5	180.6	178.8	60.5	180.0	106	63	63	62		1.001	2.954	353
361	57.519	58.039		0.16	0.16	1.33	1.07	0.24	75	75	62	1.91	1.40	66	0.013	104	104	95.8	-0.02	0.34		119.0	180.4	178.6	60.6	179.6	106	63	63	62		1.001	2.793	333
362	57.678	58.199		0.16	0.16	1.33	1.07	0.24	75	75	63	1.90	1.30	66	0.015	96	96	95.8	0.05	0.34		118.8	180.2	178.5	60.8	179.6	105	63	63	63		1.001	2.795	333

Elapsed Time	Particulate Sampling Data																	Fuel Weight, lb		Flow, gpm		Temperature Data, oF												
	Gas Meter Cubic Feet (1)	Gas Meter Cubic Feet (2)	Gas Meter Cubic Feet (amb)	Sample Rate, cfm (1)	Sample Rate, cfm (2)	Orifice dH (1)	Orifice dH (2)	Orifice dH (amb)	Meter oF (1)	Meter oF (2)	Meter oF (amb)	Meter Vac. in. Hg. (1)	Meter Vac. in. Hg. (2)	Dilution Tunnel Temp.	Dilution Tunnel dP	Pro. Rate (%) (1)	Pro. Rate (%) (2)	Scale Reading	Weight Change	Load Side Liquid Flow Rate	Boiler Side Liquid Flow Rate (optional)	Thermopile ΔT	Boiler to Heat Exch. Temp.	Heat Exch to Boiler Temp.	Inlet Load Temp.	Outlet Load Temp.	Stack	Filter (1)	Filter (2)	Ambient		Specific Heat of Inlet Water (BTU/lb-°F)	Mass Flow Rate of Inlet Water (lb/min)	Heat Output, Btu
363	57.838	58.361		0.16	0.16	1.34	1.07	0.24	75	75	63	1.89	1.40	66	0.015	96	97	95.7	0.09	0.32		118.8	180.1	178.4	60.9	179.7	104	63	63	63		1.001	2.631	313
364	57.998	58.522		0.16	0.16	1.34	1.07	0.24	75	74	63	1.90	1.40	66	0.014	100	100	95.7	-0.02	0.35		118.6	180.0	178.2	61.0	179.6	104	63	63	63		1.001	2.952	351
365	58.157	58.683		0.16	0.16	1.34	1.07	0.24	75	74	63	1.90	1.40	67	0.014	99	100	95.8	-0.08	0.34		118.3	179.9	178.1	61.1	179.3	103	63	63	63		1.001	2.795	331
366	58.317	58.844		0.16	0.16	1.34	1.07	0.24	75	75	63	1.89	1.30	68	0.015	97	97	95.7	0.04	0.32		117.9	179.7	178.0	61.2	179.1	102	63	63	63		1.001	2.632	311
367	58.476	59.006		0.16	0.16	1.34	1.07	0.24	75	75	64	1.89	1.40	68	0.015	96	97	95.8	-0.05	0.32		117.7	179.6	177.9	61.3	179.0	102	63	64	64		1.001	2.633	310
368	58.636	59.166		0.16	0.16	1.34	1.07	0.24	75	75	63	1.88	1.40	67	0.012	108	107	95.8	0.02	0.34		117.4	179.5	177.8	61.4	178.8	101	63	63	63		1.001	2.802	329
369	58.796	59.326		0.16	0.16	1.34	1.07	0.24	75	75	63	1.89	1.40	67	0.015	97	96	95.8	-0.02	0.37		117.2	179.4	177.7	61.4	178.7	101	63	64	63		1.001	3.101	364
370	58.956	59.488		0.16	0.16	1.33	1.07	0.24	75	75	63	1.89	1.40	66	0.014	100	100	95.7	0.10	0.34		117.3	179.2	177.5	61.5	178.8	100	63	64	63		1.001	2.856	336
371	59.116	59.649		0.16	0.16	1.34	1.07	0.24	75	75	63	1.90	1.40	66	0.015	96	96	95.7	0.00	0.32		116.9	179.0	177.3	61.4	178.3	99	63	64	63		1.001	2.637	309
372	59.276	59.809		0.16	0.16	1.34	1.07	0.24	75	75	63	1.88	1.40	66	0.014	100	99	95.8	-0.13	0.35		117.2	178.9	177.2	61.3	178.5	99	63	64	63		1.001	2.885	336
373	59.435	59.970		0.16	0.16	1.33	1.07	0.24	75	75	63	1.89	1.30	66	0.016	93	93	95.7	0.14	0.32		116.9	178.7	177.0	61.2	178.1	98	63	64	63		1.001	2.702	316
374	59.595	60.132		0.16	0.16	1.33	1.07	0.24	75	75	63	1.89	1.30	66	0.014	100	100	95.8	-0.16	0.32		117.0	178.6	176.9	61.0	178.1	98	63	64	63		1.001	2.632	308
375	59.754	60.292		0.16	0.16	1.33	1.07	0.24	75	75	62	1.88	1.40	66	0.014	99	99	95.7	0.13	0.35		117.0	178.5	176.8	61.0	178.0	97	63	64	62		1.001	2.949	345
376	59.914	60.453		0.16	0.16	1.33	1.07	0.24	75	75	62	1.89	1.40	65	0.014	100	100	95.7	-0.01	0.34		116.9	178.3	176.6	60.9	177.8	97	63	64	62		1.001	2.793	327
377	60.074	60.614		0.16	0.16	1.34	1.07	0.24	75	75	62	1.89	1.40	65	0.013	104	103	95.7	0.05	0.34		116.6	178.2	176.5	60.8	177.5	97	63	63	62		1.001	2.793	326
378	60.233	60.775		0.16	0.16	1.34	1.07	0.24	75	75	62	1.89	1.40	68	0.014	99	100	95.8	-0.08	0.32		116.7	178.0	176.3	60.7	177.4	122	64	64	62		1.001	2.632	308
379	60.392	60.936		0.16	0.16	1.34	1.07	0.24	75	75	62	1.89	1.40	72	0.014	100	100	95.5	0.22	0.32		116.7	177.8	176.1	60.6	177.4	140	64	64	62		1.001	2.630	307
380	60.552	61.096		0.16	0.16	1.34	1.07	0.24	75	75	62	1.90	1.40	67	0.013	104	103	95.5	0.06	0.34		116.4	177.7	176.1	60.5	176.9	136	63	64	62		1.001	2.794	326
381	60.711	61.258		0.16	0.16	1.34	1.07	0.24	75	75	62	1.90	1.40	65	0.014	99	100	95.6	-0.14	0.33		116.6	177.6	175.9	60.5	177.1	125	63	63	62		1.001	2.790	326
382	60.872	61.419		0.16	0.16	1.34	1.07	0.24	75	75	62	1.90	1.40	65	0.015	97	96	95.5	0.12	0.34		116.4	177.5	175.8	60.4	176.9	119	63	63	62		1.001	2.792	325
383	61.032	61.579		0.16	0.16	1.34	1.07	0.24	75	75	62	1.89	1.40	65	0.013	104	103	95.5	-0.01	0.35		116.4	177.3	175.6	60.4	176.7	114	63	63	62		1.001	2.954	344
384	61.192	61.741		0.16	0.16	1.34	1.07	0.24	75	75	62	1.89	1.30	65	0.015	96	97	95.4	0.12	0.34		116.3	177.1	175.5	60.3	176.6	111	63	63	62		1.001	2.794	325
385	61.351	61.902		0.16	0.16	1.34	1.07	0.24	75	75	62	1.88	1.30	65	0.016	93	93	95.6	-0.15	0.35		116.2	177.0	175.3	60.3	176.5	108	63	63	62		1.001	2.955	344
386	61.511	62.063		0.16	0.16	1.33	1.07	0.24	75	75	62	1.90	1.40	65	0.012	108	108	95.5	0.03	0.35		116.0	176.8	175.1	60.2	176.2	106	63	63	62		1.001	2.954	343
387	61.671	62.224		0.16	0.16	1.33	1.07	0.24	75	75	62	1.90	1.30	64	0.015	96	96	95.5	0.02	0.34		115.8	176.6	174.9	60.2	176.0	105	63	63	62		1.001	2.792	324
388	61.830	62.386		0.16	0.16	1.34	1.07	0.24	75	75	62	1.90	1.40	64	0.016	93	94	95.5	0.00	0.30		115.8	176.6	174.9	60.2	176.0	103	63	63	62		1.001	2.480	288
389	61.990	62.546		0.16	0.16	1.34	1.07	0.24	75	75	62	1.90	1.30	64	0.015	96	96	95.4	0.06	0.34		115.7	176.4	174.7	60.2	175.9	102	63	63	62		1.001	2.798	324
390	62.150	62.707		0.16	0.16	1.34	1.07	0.24	75	75	61	1.89	1.30	64	0.013	103	103	95.4	0.01	0.34		115.4	176.2	174.6	60.2	175.6	101	63	63	61		1.001	2.797	323
391	62.309	62.868		0.16	0.16	1.34	1.07	0.24	75	75	61	1.89	1.30	64	0.016	93	93	95.5	-0.09	0.30		115.6	176.2	174.5	60.2	175.7	100	63	63	61		1.001	2.474	286
392	62.469	63.030		0.16	0.16	1.34	1.07	0.24	75	75	61	1.88	1.30	64	0.014	100	100	95.7	-0.13	0.32		115.3	176.0	174.3	60.1	175.4	99	63	63	61		1.001	2.637	304
393	62.629	63.190		0.16	0.16	1.34	1.07	0.24	75	75	61	1.88	1.40	66	0.013	104	103	95.5	0.17	0.33		115.2	175.8	174.1	60.1	175.3	99	63	63	61		1.001	2.713	313
394	62.789	63.352		0.16	0.16	1.34	1.07	0.24	75	75	61	1.89	1.30	65	0.013	104	104	95.5	-0.05	0.28		115.1	175.7	174.0	60.1	175.2	98	63	63	61		1.001	2.322	268
395	62.949	63.514		0.16	0.16	1.33	1.07	0.24	75	75	61	1.90	1.30	65	0.015	96	97	95.5	0.06	0.30		114.9	175.6	173.9	60.1	175.0	98	62	63	61		1.001	2.480	285
396	63.109	63.675		0.16	0.16	1.34	1.07	0.24	75	75	61	1.90	1.30	65	0.013	104	103	95.6	-0.12	0.36		114.7	175.4	173.7	60.1	174.8	97	62	63	61		1.001	3.033	348
397	63.269	63.835		0.16	0.16	1.34	1.07	0.24	75	75	61	1.88	1.40	64	0.013	103	103	95.6	0.02	0.35		114.6	175.2	173.5	60.1	174.7	97	62	63	61		1.001	2.892	332
398	63.429	63.996		0.16	0.16	1.34	1.06	0.24	75	75	62	1.90	1.30	64	0.013	103	103	95.5	0.09	0.36		114.5	175.1	173.4	60.2	174.6	97	62	63	62		1.001	2.958	339
399	63.588	64.158		0.16	0.16	1.33	1.07	0.24	75	75	62	1.89	1.30	65	0.015	96	97	95.6	-0.11	0.35		114.1	175.0	173.3	60.3	174.3	96	62	63	62		1.001	2.955	337
400	63.748	64.319		0.16	0.16	1.33	1.07	0.24	75	75	62	1.88	1.30	65	0.015	96	96	95.4	0.21	0.36		113.8	174.8	173.1	60.4	174.2	95	62	63	62		1.001	2.958	337
401	63.908	64.480		0.16	0.16	1.33	1.07	0.24	75	75	62	1.88	1.40	65	0.013	104	103	95.5	-0.14	0.34		113.7	174.7	173.0	60.5	174.1	94	62	63	62		1.001	2.796	316
402	64.067	64.642		0.16	0.16	1.34	1.07	0.24	75	75	62	1.89	1.40	65	0.014	99	100	95.5	0.05	0.30		113.5	174.5	172.8	60.6	174.1	94	62	63	62		1.001	2.475	281
403	64.227	64.802		0.16	0.16	1.34	1.07	0.24	75	75	62	1.89	1.30	65	0.014	100	99	95.6	-0.11	0.35		113.0	174.4	172.7	60.7	173.7	94	62	63	62		1.001	2.954	334
404	64.387	64.963		0.16	0.16	1.34	1.07	0.24	75	75	62	1.88	1.30	66	0.015	96	96	95.5	0.13	0.34		112.9	174.2	172.6	60.8	173.7	94	63	63	62		1.001	2.794	316
405	64.547	65.124		0.16	0.16	1.34	1.07	0.24	75	75	62	1.89	1.40	66	0.013	104	104	95.5	-0.06	0.32		112.5	174.1	172.4	60.9	173.5	93	63	63	62		1.001	2.640	297
406	64.706	65.286		0.16	0.16	1.34	1.07	0.24	75	74	62	1.90	1.40	66	0.015	96	97	95.6	-0.06	0.32		112.4	174.0	172.3	61.0	173.5	93	63	63	62		1.001	2.634	297
407	64.866	65.446		0.16	0.16	1.34	1.07	0.24	75	74	62	1.89	1.30	66	0.013	104	103	95.6	0.01	0.33		112.2	173.8	172.1	61.1	173.4	93	63	63	62		1.001	2.791	314
408	65.026	65.607		0.16	0.16	1.34	1.07	0.24	75	75	63	1.89	1.30	66	0.014	100	100	95.5	0.08	0.35		112.0	173.6	172.0	61.2	173.2	93	63	63	63		1.001	2.951	331
409	65.186	65.769		0.16	0.16	1.34	1.07	0.24	75	75	63	1.90	1.40	66	0.014	100	100	95.5	-0.04	0.34		111.6	173.5	171.8	61.3	172.9	92	63	63	63		1.001	2.794	312
410	65.346	65.930		0.16	0.16	1.34	1.06	0.24	75	74	63	1.91	1.40	70	0.015	97	97	95.5	0.07	0.34		111.3	173.3	171.7	61.4	172.7	129	63	64	63		1.001	2.795	311
411	65.506	66.090		0.16	0.16	1.33	1.07	0.24	75	75	63	1.89	1.40	69	0.016	94	93	95.4	0.10	0.34		111.3	173.2	171.5	61.5	172.8	134	63	63	63		1.001	2.794	311
412	65.665	66.251		0.16	0.16	1.33	1.07	0.24	75	74	63	1.88	1.40	67	0.016	93	94	95.4	-0.06	0.35		110.9	173.0	171.4	61.6	172.5	123	63	63	63		1.001	2.950	328
413	65.825	66.413		0.16	0.16	1.33	1.07	0.24	75	74	63	1.90	1.30	67	0.015	97	97	95.4	0.01	0.32		110.7	172.9	171.3	61.7	172.4	116	63	63	63		1.001	2.630	292
414	65.984	66.573		0.16	0.16	1.33	1.07	0.24	75	74	63	1.90	1.40	67	0.017	90	90	95.4	0.02	0.35		110.6	172.7	171.1	61.7	172.3	112	63	63	63		1.001	2.951	327
415	66.144	66.734		0.16	0.16	1.34	1.07	0.24	75	75	63	1.89	1.40	67	0.013	104	104	95.4	0.03	0.34		110.2	172.6	170.9	61.8	172.0	109	63	63	63		1.001	2.795	308
416	66.304	66.896		0.16	0.16	1.34	1.07	0.24	75	75	63	1.89	1.40	67	0.015	97	97	95.4	-0.04	0.33		110.0	172.4	170.8	61.8	171.8	106	63	64	63		1.001	2.719	300
417	66.463	67.056		0.16	0.16	1.34	1.06	0.24	75	75	63	1.90	1.40	67	0.014	99	99	95.5	-0.11	0.34		109.9	172.3	170.7	61.8	171.8	104	63	64	63		1.001	2.791	307
418	66.623	67.217		0.16	0.16	1.34	1.07	0.24	75	75	63	1.90	1.40	67	0.014	100	100	95.4	0.17	0.35		109.9	172.2	170.5	61.9	171.8	102	63	64	63		1.001	2.954	325
419	66.782	67.378		0.16	0.16	1.34	1.07	0.24	75	75	63	1.90	1.40	68	0.014	99	100	95.4	-0.01	0.35		109.7	172.0	170.4	61.9	171.6	100	64	64	63		1.001	2.951	324
420	66.942	67.539		0.16	0.16	1.34	1.07	0.24	75	75	63	1.91	1.40	69	0.015	97	97	95.4	0.00	0.34		109.5	171.8	170.2	61.9	171.4	100	64	64	63		1.001	2.792	306
421	67.102	67.700		0.16	0.16	1.34	1.07	0.24	75	75	63	1.90	1.30	67	0.014	100	100	95.4	0.00	0.35		109.2	171.7	170.1	61.9	171.1	98	64	64	63		1.001	2.951	323
422	67.262	67.860		0.16	0.16	1.34	1.07	0.24	75	75	63	1.88	1.30	67	0.015	97	96	95.3	0.07	0.35		109.0	171.5	169.9	62.0	171.0	97	64	64	63		1.001	2.952	322
423	67.422	68.022		0.16	0.16	1.33	1.07	0.24	75	75	63	1.88	1.40	67	0.015	97	97	95.4	-0.12	0.32		108.9	171.4	169.8	62.0	170.9	97	64	64	63		1.001	2.633	287
424	67.581	68.182		0.16	0.16	1.33	1.06	0.24	75	75	63	1.89	1.40	66	0.014	99	99	95.3	0.10	0.32		108.9	171.3	169.7	61.9	170.9	96	64	64	63		1.001	2.635	287

Elapsed Time	Particulate Sampling Data																	Fuel Weight, lb		Flow, gpm		Temperature Data, oF													
	Gas Meter Cubic Feet (1)	Gas Meter Cubic Feet (2)	Gas Meter Cubic Feet (amb)	Sample Rate, cfm (1)	Sample Rate, cfm (2)	Orifice dH (1)	Orifice dH (2)	Orifice dH (amb)	Meter oF (1)	Meter oF (2)	Meter oF (amb)	Meter Vac. in. Hg. (1)	Meter Vac. in. Hg. (2)	Dilution Tunnel Temp.	Dilution Tunnel dP	Pro. Rate (%) (1)	Pro. Rate (%) (2)	Scale Reading	Weight Change	Load Side Liquid Flow Rate	Boiler Side Liquid Flow Rate (optional)	Thermopile ΔT	Boiler to Heat Exch. Temp.	Heat Exch to Boiler Temp.	Inlet Load Temp.	Outlet Load Temp.	Stack	Filter (1)	Filter (2)	Ambient		Specific Heat of Inlet Water (BTU/lb-°F)	Mass Flow Rate of Inlet Water (lb/min)	Heat Output, Btu
425	67.741	68.343		0.16	0.16	1.33	1.07	0.24	75	75	63	1.88	1.40	66	0.014	100	100	95.3	0.00	0.33		108.8	171.1	169.6	61.9	170.7	95	64	64	63		1.001	2.790	304
426	67.900	68.504		0.16	0.16	1.33	1.07	0.24	75	75	63	1.89	1.30	66	0.014	99	100	95.4	-0.09	0.33		108.8	171.0	169.4	61.7	170.5	94	64	64	63		1.001	2.790	304
427	68.060	68.665		0.16	0.16	1.34	1.07	0.24	75	75	63	1.89	1.40	66	0.014	100	100	95.4	0.01	0.33		108.9	170.8	169.2	61.6	170.5	94	64	64	63		1.001	2.790	304
428	68.219	68.826		0.16	0.16	1.34	1.07	0.24	75	75	63	1.89	1.40	66	0.014	99	100	95.3	0.08	0.37		108.5	170.7	169.1	61.4	170.0	94	64	64	63		1.001	3.108	338
429	68.379	68.987		0.16	0.16	1.34	1.07	0.24	75	75	63	1.89	1.40	66	0.014	100	100	95.2	0.10	0.33		108.8	170.5	168.9	61.3	170.1	93	64	64	63		1.001	2.790	304
430	68.539	69.148		0.16	0.16	1.34	1.07	0.24	75	75	63	1.89	1.30	65	0.013	104	103	95.5	-0.25	0.32		108.6	170.4	168.8	61.3	169.8	93	64	64	63		1.001	2.633	286
431	68.698	69.309		0.16	0.16	1.34	1.07	0.24	76	75	63	1.90	1.40	65	0.015	96	96	95.3	0.13	0.35		108.5	170.2	168.7	61.1	169.7	92	64	64	63		1.001	2.952	321
432	68.858	69.469		0.16	0.16	1.34	1.07	0.24	76	75	63	1.89	1.30	65	0.014	100	99	95.2	0.13	0.35		108.5	170.1	168.5	61.0	169.5	92	64	64	63		1.001	2.952	321
433	69.018	69.631		0.16	0.16	1.34	1.07	0.24	76	75	62	1.88	1.30	65	0.015	96	97	95.3	-0.13	0.33		108.3	169.9	168.4	61.0	169.3	92	63	64	62		1.001	2.791	303
434	69.178	69.792		0.16	0.16	1.34	1.06	0.24	76	75	62	1.89	1.40	65	0.015	96	96	95.2	0.11	0.37		108.2	169.8	168.2	60.9	169.1	91	63	64	62		1.001	3.112	337
435	69.338	69.952		0.16	0.16	1.33	1.07	0.24	76	75	62	1.89	1.40	65	0.014	100	99	95.3	-0.10	0.34		108.4	169.7	168.2	60.8	169.3	91	63	64	62		1.001	2.793	303
436	69.497	70.114		0.16	0.16	1.33	1.07	0.24	76	75	62	1.89	1.30	65	0.014	99	100	95.4	-0.05	0.35		108.1	169.6	168.0	60.8	168.9	91	63	63	62		1.001	2.952	320
437	69.657	70.275		0.16	0.16	1.33	1.07	0.24	76	75	62	1.89	1.30	65	0.014	100	100	95.3	0.04	0.35		108.2	169.4	167.9	60.7	168.9	90	63	63	62		1.001	2.953	320
438	69.817	70.436		0.16	0.16	1.33	1.07	0.24	76	75	62	1.89	1.40	64	0.015	96	96	95.3	-0.01	0.34		108.0	169.2	167.7	60.7	168.7	89	63	63	62		1.001	2.800	303
439	69.976	70.596		0.16	0.16	1.34	1.07	0.24	76	75	62	1.89	1.30	64	0.014	99	99	95.3	0.03	0.35		108.1	169.1	167.6	60.6	168.7	90	63	63	62		1.001	2.956	320
440	70.136	70.758		0.16	0.16	1.34	1.07	0.24	76	75	62	1.90	1.40	64	0.014	100	100	95.2	0.13	0.30		108.0	168.9	167.4	60.6	168.6	89	63	63	62		1.001	2.535	274
441	70.295	70.920		0.16	0.16	1.34	1.07	0.24	76	75	62	1.91	1.40	65	0.014	99	100	95.2	0.02	0.33		107.8	168.8	167.3	60.5	168.4	91	63	63	62		1.001	2.740	296
442	70.455	71.080		0.16	0.16	1.34	1.07	0.24	76	75	62	1.89	1.40	69	0.013	104	103	95.2	-0.05	0.35		107.6	168.7	167.1	60.5	168.0	122	63	63	62		1.001	2.889	311
443	70.615	71.241		0.16	0.16	1.34	1.07	0.24	76	75	62	1.88	1.30	66	0.012	108	108	95.2	0.04	0.34		107.5	168.5	166.9	60.4	168.0	123	63	63	62		1.001	2.799	301
444	70.775	71.403		0.16	0.16	1.34	1.07	0.24	75	75	62	1.88	1.40	64	0.014	100	100	95.2	-0.03	0.34		107.5	168.4	166.8	60.4	167.8	115	63	63	62		1.001	2.798	301
445	70.935	71.563		0.16	0.16	1.34	1.07	0.24	75	75	62	1.88	1.30	64	0.015	96	96	95.2	-0.03	0.34		107.4	168.2	166.6	60.3	167.7	110	63	63	62		1.001	2.796	301
446	71.095	71.724		0.16	0.16	1.34	1.07	0.24	76	75	62	1.89	1.30	64	0.015	96	96	95.3	-0.02	0.32		107.3	168.0	166.5	60.2	167.5	106	63	63	62		1.001	2.639	283
447	71.255	71.885		0.16	0.16	1.34	1.07	0.24	75	75	61	1.89	1.30	64	0.013	103	103	95.1	0.15	0.34		107.2	167.9	166.3	60.2	167.4	104	63	63	61		1.001	2.800	301
448	71.414	72.047		0.16	0.16	1.34	1.07	0.24	75	75	61	1.90	1.30	64	0.013	103	104	95.2	-0.14	0.34		107.2	167.7	166.2	60.1	167.3	101	63	63	61		1.001	2.799	300
449	71.574	72.208		0.16	0.16	1.33	1.07	0.24	75	75	61	1.88	1.30	64	0.016	93	93	95.3	-0.02	0.36		107.0	167.6	166.0	60.1	167.1	99	62	63	61		1.001	2.958	317
450	71.734	72.369		0.16	0.16	1.33	1.08	0.24	75	75	61	1.88	1.30	64	0.012	108	108	95.3	-0.04	0.32		107.0	167.4	165.8	60.0	167.0	98	62	63	61		1.001	2.642	283
451	71.893	72.531		0.16	0.16	1.33	1.07	0.24	75	75	63	1.88	1.30	64	0.015	96	97	95.2	0.12	0.35		106.7	167.3	165.7	60.0	166.6	97	62	63	63		1.001	2.957	316
452	72.053	72.692		0.16	0.16	1.33	1.07	0.24	75	75	61	1.89	1.30	66	0.016	93	93	95.3	-0.09	0.34		106.6	167.1	165.5	59.9	166.5	96	62	63	61		1.001	2.799	299
453	72.213	72.852		0.16	0.16	1.34	1.07	0.24	75	75	61	1.90	1.30	65	0.016	93	93	95.2	0.07	0.32		106.6	167.0	165.4	59.9	166.4	95	62	63	61		1.001	2.639	282
454	72.372	73.013		0.16	0.16	1.34	1.07	0.24	75	75	61	1.90	1.30	64	0.013	103	103	95.2	0.02	0.36		106.7	166.8	165.3	59.8	166.5	94	62	62	61		1.001	2.958	316
455	72.532	73.176		0.16	0.16	1.34	1.07	0.24	75	74	61	1.89	1.40	64	0.014	100	101	95.2	0.01	0.37		106.3	166.7	165.2	59.8	166.1	93	62	62	61		1.001	3.120	332
456	72.692	73.336		0.16	0.16	1.34	1.07	0.24	75	74	61	1.88	1.30	64	0.014	100	99	95.1	0.02	0.32		106.3	166.5	165.0	59.8	166.1	92	62	62	61		1.001	2.641	281
457	72.852	73.497		0.16	0.16	1.34	1.07	0.24	75	74	62	1.89	1.30	64	0.015	96	96	95.1	0.07	0.36		106.0	166.4	164.8	59.9	165.8	91	62	62	62		1.001	2.960	314
458	73.012	73.659		0.16	0.16	1.33	1.07	0.24	75	74	62	1.89	1.30	64	0.016	93	94	95.3	-0.21	0.28		105.7	166.2	164.7	59.9	165.6	90	62	62	62		1.001	2.325	246
459	73.172	73.820		0.16	0.16	1.33	1.07	0.24	75	74	62	1.90	1.30	65	0.015	96	97	95.1	0.16	0.26		105.6	166.1	164.6	60.0	165.6	91	62	62	62		1.001	2.172	230
460	73.332	73.981		0.16	0.16	1.34	1.07	0.24	75	74	62	1.90	1.30	65	0.013	104	104	95.3	-0.17	0.34		105.4	166.0	164.4	60.1	165.5	90	62	62	62		1.001	2.794	295
461	73.492	74.142		0.16	0.16	1.34	1.07	0.24	75	74	62	1.88	1.30	65	0.014	100	100	95.1	0.15	0.34		105.1	165.8	164.3	60.3	165.3	90	62	63	62		1.001	2.794	294
462	73.651	74.304		0.16	0.16	1.33	1.07	0.24	75	74	62	1.89	1.30	65	0.014	99	101	95.2	-0.09	0.32		104.8	165.6	164.1	60.4	165.2	89	62	63	62		1.001	2.635	276
463	73.811	74.464		0.16	0.16	1.33	1.07	0.24	75	74	62	1.90	1.40	65	0.016	93	93	95.2	0.01	0.32		104.6	165.5	164.0	60.6	165.1	89	62	63	62		1.001	2.638	276
464	73.970	74.625		0.16	0.16	1.33	1.07	0.24	75	74	62	1.89	1.40	65	0.014	99	100	95.1	0.07	0.33		104.2	165.4	163.8	60.7	164.9	88	62	63	62		1.001	2.747	287
465	74.130	74.786		0.16	0.16	1.34	1.07	0.24	75	74	62	1.91	1.30	66	0.016	93	94	95.2	-0.09	0.34		103.9	165.3	163.7	60.8	164.7	88	62	63	62		1.001	2.820	293
466	74.290	74.948		0.16	0.16	1.34	1.07	0.24	75	74	62	1.88	1.30	66	0.013	104	104	95.1	0.09	0.34		103.6	165.1	163.5	60.9	164.6	88	63	63	62		1.001	2.810	292
467	74.449	75.108		0.16	0.16	1.34	1.07	0.24	75	74	62	1.90	1.40	66	0.015	96	96	95.3	-0.13	0.37		103.3	164.9	163.4	61.1	164.4	87	63	63	62		1.001	3.097	320
468	74.609	75.269		0.16	0.16	1.34	1.06	0.24	75	74	63	1.90	1.40	66	0.014	100	100	95.2	0.06	0.36		103.0	164.8	163.2	61.2	164.2	87	63	63	63		1.001	2.957	305
469	74.769	75.431		0.16	0.16	1.34	1.06	0.24	75	74	63	1.90	1.30	66	0.014	100	101	95.1	0.13	0.30		102.8	164.6	163.1	61.3	164.2	87	63	63	63		1.001	2.478	255
470	74.928	75.591		0.16	0.16	1.33	1.06	0.24	75	74	63	1.90	1.30	66	0.014	99	99	95.2	-0.17	0.39		102.6	164.5	163.0	61.4	164.0	86	63	63	63		1.001	3.276	336
471	75.089	75.752		0.16	0.16	1.34	1.07	0.24	75	74	63	1.90	1.30	66	0.014	101	100	95.2	0.08	0.34		102.3	164.4	162.8	61.6	163.8	85	63	63	63		1.001	2.799	287
472	75.249	75.913		0.16	0.16	1.33	1.07	0.24	75	74	63	1.90	1.40	66	0.014	100	100	95.2	-0.01	0.32		102.1	164.2	162.7	61.6	163.7	85	63	63	63		1.001	2.638	270
473	75.408	76.074		0.16	0.16	1.34	1.06	0.24	75	74	63	1.90	1.40	70	0.014	100	100	95.1	0.12	0.35		101.9	164.1	162.5	61.7	163.6	119	63	63	63		1.001	2.955	301
474	75.568	76.235		0.16	0.16	1.33	1.07	0.24	75	74	63	1.89	1.30	70	0.015	97	97	95.2	-0.11	0.35		101.7	163.9	162.4	61.8	163.5	126	63	63	63		1.001	2.955	301
475	75.728	76.395		0.16	0.16	1.32	1.07	0.24	75	74	63	1.88	1.30	67	0.016	94	93	95.1	0.05	0.34		101.5	163.7	162.2	61.9	163.4	116	63	63	63		1.001	2.797	284
476	75.887	76.557		0.16	0.16	1.33	1.07	0.24	75	74	63	1.88	1.40	67	0.015	96	97	95.1	0.05	0.37		101.2	163.6	162.1	62.0	163.2	109	63	63	63		1.001	3.114	316
477	76.046	76.717		0.16	0.16	1.34	1.07	0.24	75	74	63	1.88	1.30	67	0.014	99	99	94.8	0.23	0.28		101.0	163.5	162.0	62.0	163.0	105	63	63	63		1.001	2.318	234
478	76.206	76.878		0.16	0.16	1.34	1.07	0.24	75	74	63	1.89	1.30	67	0.015	97	97	95.1	-0.27	0.35		100.7	163.4	161.8	62.1	162.8	102	63	63	63		1.001	2.954	298
479	76.365	77.039		0.16	0.16	1.34	1.07	0.24	75	74	63	1.90	1.40	67	0.013	103	104	95.1	0.06	0.34		100.5	163.2	161.7	62.2	162.7	99	63	64	63		1.001	2.795	281
480	76.525	77.200		0.16	0.16	1.33	1.07	0.24	75	74	63	1.90	1.30	67	0.015	97	97	95.1	-0.03	0.32		100.3	163.0	161.5	62.2	162.6	97	63	64	63		1.001	2.638	265
481	76.684	77.360		0.16	0.16	1.34	1.07	0.24	75	74	63	1.90	1.40	67	0.014	99	99	94.9	0.18	0.32		100.3	162.9	161.4	62.3	162.6	96	63	64	63		1.001	2.635	265
482	76.844	77.521		0.16	0.16	1.33	1.07	0.24	75	74	63	1.90	1.30	67	0.013	104	104	95.0	-0.06	0.39		100.1	162.7	161.2	62.3	162.4	95	63	64	63		1.001	3.265	327
483	77.004	77.683		0.16	0.16	1.34	1.07	0.24	75	74	63	1.89	1.40	68	0.014	100	101	95.1	-0.06	0.32		99.7	162.6	161.1	62.3	162.1	93	64	64	63		1.001	2.629	263
484	77.164	77.843		0.16	0.16	1.33	1.07	0.24	75	75	63	1.90	1.40	69	0.015	97	96	94.9	0.12	0.32		99.8	162.4	160.9	62.4	162.1	93	64	64	63		1.001	2.637	263
485	77.323	78.004		0.16	0.16	1.33	1.06	0.24	75	75	63	1.90	1.40	70	0.015	96	97	95.1	-0.18	0.33		99.4	162.3	160.7	62.4	161.8	111	64	64	63		1.001	2.767	275
486	77.483	78.165		0.16	0.16	1.32	1.06	0.24	75	75	63	1.89	1.40	73	0.015	97	97	95.1	0.02	0.34		99.1	162.2	160.6	62.4	161.6	129	64	64	63		1.001	2.792	277

Elapsed Time	Particulate Sampling Data																	Fuel Weight, lb		Flow, gpm		Temperature Data, oF												
	Gas Meter Cubic Feet (1)	Gas Meter Cubic Feet (2)	Gas Meter Cubic Feet (amb)	Sample Rate, cfm (1)	Sample Rate, cfm (2)	Orifice dH (1)	Orifice dH (2)	Orifice dH (amb)	Meter oF (1)	Meter oF (2)	Meter oF (amb)	Meter Vac. in. Hg. (1)	Meter Vac. in. Hg. (2)	Dilution Tunnel Temp.	Dilution Tunnel dP	Pro. Rate (%) (1)	Pro. Rate (%) (2)	Scale Reading	Weight Change	Load Side Liquid Flow Rate	Boiler Side Liquid Flow Rate (optional)	Thermopile ΔT	Boiler to Heat Exch. Temp.	Heat Exch to Boiler Temp.	Inlet Load Temp.	Outlet Load Temp.	Stack	Filter (1)	Filter (2)	Ambient		Specific Heat of Inlet Water (BTU/lb-°F)	Mass Flow Rate of Inlet Water (lb/min)	Heat Output, Btu
487	77.642	78.325		0.16	0.16	1.32	1.06	0.24	75	75	63	1.90	1.40	73	0.015	97	96	94.9	0.15	0.34		99.1	162.0	160.4	62.5	161.5	140	64	64	63		1.001	2.798	277
488	77.801	78.486		0.16	0.16	1.33	1.07	0.24	75	75	63	1.90	1.40	73	0.014	100	100	94.9	0.00	0.37		99.1	161.9	160.3	62.4	161.5	144	64	64	63		1.001	3.118	309
489	77.961	78.647		0.16	0.16	1.33	1.06	0.24	75	75	63	1.89	1.40	73	0.016	94	94	94.8	0.08	0.37		99.0	161.7	160.0	62.3	161.3	146	64	64	63		1.001	3.113	309
490	78.120	78.807		0.16	0.16	1.33	1.06	0.24	75	75	63	1.89	1.40	73	0.014	100	100	94.9	-0.08	0.39		99.0	161.6	159.8	62.2	161.2	148	64	65	63		1.001	3.269	324
491	78.280	78.968		0.16	0.16	1.33	1.07	0.24	75	75	63	1.90	1.30	73	0.015	97	97	94.8	0.13	0.32		98.7	161.4	159.5	62.2	160.9	149	64	65	63		1.001	2.634	260
492	78.439	79.128		0.16	0.16	1.33	1.07	0.24	75	75	63	1.89	1.40	73	0.013	104	104	94.6	0.19	0.32		98.5	161.3	159.3	62.2	160.8	150	64	65	63		1.001	2.632	260
493	78.598	79.290		0.16	0.16	1.33	1.07	0.24	75	75	63	1.90	1.40	73	0.015	97	98	94.7	-0.07	0.34		98.5	161.1	159.1	62.1	160.6	152	64	65	63		1.001	2.791	275
494	78.758	79.450		0.16	0.16	1.34	1.07	0.24	75	75	63	1.89	1.40	73	0.013	104	104	94.6	-0.10	0.34		98.5	160.9	158.9	62.0	160.5	154	64	65	63		1.001	2.794	276
495	78.919	79.611		0.16	0.16	1.33	1.07	0.24	75	75	63	1.90	1.40	73	0.015	98	97	94.6	0.15	0.35		98.5	160.8	158.7	62.0	160.5	158	64	65	63		1.001	2.952	291
496	79.078	79.772		0.16	0.16	1.33	1.07	0.24	75	75	62	1.90	1.40	73	0.014	100	100	94.3	0.27	0.28		98.2	160.6	158.5	61.9	160.1	163	64	65	62		1.001	2.321	226
497	79.238	79.933		0.16	0.16	1.34	1.06	0.24	75	75	62	1.89	1.40	74	0.013	104	104	94.1	0.24	0.34		98.3	160.5	158.3	61.8	160.1	167	64	65	62		1.001	2.794	275
498	79.397	80.093		0.16	0.16	1.33	1.07	0.24	75	75	62	1.89	1.40	75	0.014	100	100	94.1	0.01	0.30		98.1	160.4	158.1	61.8	159.9	177	64	65	62		1.001	2.476	243
499	79.556	80.254		0.16	0.16	1.33	1.07	0.24	75	75	62	1.88	1.40	77	0.014	100	101	93.7	0.38	0.34		97.9	160.4	157.7	61.8	159.7	188	65	65	62		1.001	2.794	274
500	79.715	80.415		0.16	0.16	1.33	1.07	0.24	75	75	62	1.90	1.40	79	0.015	97	98	93.5	0.24	0.32		97.4	160.4	157.6	62.3	159.7	201	65	65	62		1.001	2.631	257
501	79.875	80.575		0.16	0.16	1.33	1.07	0.24	75	75	62	1.91	1.40	81	0.013	105	104	93.2	0.32	0.35		96.4	160.5	157.7	63.4	159.8	213	65	65	62		1.001	2.951	285
502	80.034	80.736		0.16	0.16	1.33	1.07	0.24	75	75	62	1.90	1.40	82	0.014	101	101	92.8	0.40	0.35		95.9	160.8	157.9	63.9	159.8	223	65	66	62		1.001	2.956	284
503	80.194	80.897		0.16	0.16	1.34	1.07	0.24	75	75	62	1.89	1.40	83	0.012	110	110	92.4	0.30	0.36		96.0	161.2	158.2	64.3	160.3	235	65	66	62		1.001	2.956	284
504	80.353	81.057		0.16	0.16	1.34	1.07	0.24	75	75	62	1.90	1.40	85	0.014	101	101	92.1	0.37	0.32		96.1	161.6	158.7	64.4	160.5	247	65	66	62		1.001	2.640	254
505	80.512	81.218		0.16	0.16	1.34	1.07	0.24	75	75	62	1.91	1.40	87	0.014	101	102	91.5	0.54	0.32		96.3	162.3	159.3	64.8	161.0	261	65	66	62		1.001	2.639	254
506	80.672	81.379		0.16	0.16	1.33	1.07	0.24	75	75	62	1.92	1.40	88	0.014	102	102	91.3	0.28	0.34		97.1	163.0	160.0	64.8	161.9	274	66	66	62		1.001	2.804	273
507	80.831	81.538		0.16	0.16	1.33	1.06	0.24	75	75	63	1.92	1.40	90	0.015	98	97	90.8	0.50	0.27		97.3	163.7	160.7	65.1	162.4	287	66	67	63		1.001	2.266	221
508	80.990	81.698		0.16	0.16	1.33	1.07	0.24	75	75	61	1.92	1.40	93	0.014	102	102	90.2	0.56	0.34		98.3	164.6	161.5	64.9	163.1	300	66	67	61		1.001	2.796	275
509	81.149	81.859		0.16	0.16	1.32	1.06	0.24	75	75	61	1.92	1.40	94	0.015	98	99	89.9	0.31	0.37		99.5	165.4	162.3	64.4	164.0	308	66	67	61		1.001	3.115	310
510	81.308	82.019		0.16	0.16	1.33	1.06	0.24	75	75	61	1.92	1.40	94	0.014	102	102	89.3	0.63	0.31		100.6	166.5	163.3	64.6	165.2	316	66	67	61		1.001	2.564	258
511	81.467	82.179		0.16	0.16	1.34	1.07	0.24	75	75	62	1.91	1.40	95	0.012	110	110	88.7	0.52	0.34		101.5	167.5	164.3	64.5	166.1	323	67	68	62		1.001	2.807	285
512	81.626	82.339		0.16	0.16	1.34	1.07	0.24	75	75	62	1.91	1.40	96	0.014	102	102	88.3	0.45	0.36		102.3	168.5	165.2	64.7	167.1	329	67	68	62		1.001	2.958	303
513	81.785	82.499		0.16	0.16	1.33	1.06	0.24	75	75	62	1.91	1.40	97	0.015	99	99	87.7	0.53	0.34		103.3	169.6	166.4	64.8	168.1	334	67	68	62		1.001	2.797	289
514	81.944	82.658		0.16	0.16	1.33	1.06	0.24	75	75	62	1.91	1.40	99	0.015	99	98	87.0	0.74	0.36		104.4	170.8	167.6	64.8	169.1	339	68	69	62		1.001	2.959	309
515	82.103	82.818		0.16	0.16	1.33	1.06	0.24	75	74	62	1.92	1.40	99	0.014	102	102	86.6	0.38	0.32		105.5	172.2	168.8	65.0	170.5	343	68	69	62		1.001	2.637	279
516	82.262	82.978		0.16	0.16	1.33	1.05	0.24	75	74	62	1.92	1.40	100	0.014	102	103	86.1	0.54	0.32		106.7	173.7	170.3	65.2	171.9	344	68	69	62		1.001	2.637	282
517	82.421	83.137		0.16	0.16	1.33	1.06	0.24	75	74	62	1.93	1.40	100	0.014	102	102	85.7	0.43	0.34		107.7	175.1	171.6	65.8	173.5	345	69	69	62		1.001	2.791	301
518	82.579	83.297		0.16	0.16	1.33	1.06	0.24	75	75	62	1.94	1.40	100	0.015	98	99	85.0	0.64	0.37		108.4	176.5	173.0	66.3	174.6	345	69	70	62		1.001	3.107	337
519	82.738	83.456		0.16	0.16	1.32	1.06	0.24	75	75	62	1.93	1.40	100	0.012	111	110	84.4	0.67	0.35		110.0	177.7	174.3	66.0	176.0	346	69	70	62		1.001	2.949	325
520	82.896	83.615		0.16	0.16	1.33	1.05	0.24	75	75	62	1.93	1.40	101	0.015	98	98	83.9	0.44	0.34		111.4	178.9	175.4	65.9	177.3	348	69	70	62		1.001	2.792	311
521	83.055	83.775		0.16	0.16	1.33	1.05	0.24	75	74	63	1.94	1.40	101	0.013	106	107	83.5	0.39	0.35		112.4	180.3	176.7	66.2	178.6	350	70	71	63		1.001	2.954	332
522	83.213	83.933		0.16	0.16	1.32	1.05	0.24	75	74	63	1.94	1.40	102	0.014	102	101	83.0	0.54	0.34		112.9	181.5	177.9	66.9	179.8	351	70	71	63		1.001	2.792	316
523	83.372	84.092		0.16	0.16	1.33	1.05	0.24	75	74	63	1.93	1.40	102	0.016	96	95	82.6	0.40	0.32		113.6	182.8	179.1	67.5	181.1	352	70	71	63		1.001	2.631	299
524	83.531	84.251		0.16	0.16	1.32	1.05	0.24	75	74	63	1.94	1.40	102	0.013	106	106	82.0	0.55	0.35		114.7	184.0	180.3	67.6	182.3	353	70	71	63		1.001	2.949	339
525	83.689	84.410		0.16	0.16	1.32	1.05	0.24	75	74	63	1.92	1.40	87	0.015	97	97	81.8	0.25	0.37		115.4	185.2	181.5	68.1	183.4	332	70	70	63		1.001	3.112	359
526	83.848	84.570		0.16	0.16	1.33	1.05	0.24	75	75	64	1.93	1.40	82	0.013	105	104	81.5	0.29	0.32		116.2	186.0	182.3	68.2	184.3	304	69	70	64		1.001	2.628	306
527	84.007	84.729		0.16	0.16	1.32	1.05	0.24	75	75	63	1.93	1.40	77	0.017	91	90	81.5	0.02	0.37		117.0	186.5	182.8	68.0	185.1	286	69	69	63		1.001	3.109	364
528	84.165	84.888		0.16	0.16	1.33	1.05	0.24	75	75	63	1.91	1.40	75	0.014	99	99	81.4	0.09	0.34		117.5	186.9	183.2	68.0	185.5	273	68	68	63		1.001	2.790	328
529	84.324	85.048		0.16	0.16	1.33	1.05	0.24	75	75	63	1.93	1.40	74	0.014	100	100	81.5	-0.08	0.35		118.0	187.2	183.5	68.0	185.9	262	67	67	63		1.001	2.951	349
530	84.484	85.207		0.16	0.16	1.33	1.05	0.24	75	75	63	1.91	1.40	73	0.014	101	99	81.2	0.28	0.30		118.2	187.5	183.8	67.9	186.1	253	67	67	63		1.001	2.531	300
531	84.643	85.367		0.16	0.16	1.32	1.06	0.24	75	75	63	1.90	1.40	73	0.015	97	96	81.1	0.05	0.33		118.0	187.7	184.0	68.4	186.4	245	67	67	63		1.001	2.715	321
532	84.802	85.528		0.16	0.16	1.33	1.06	0.24	75	75	63	1.92	1.40	72	0.016	93	94	81.0	0.10	0.32		117.6	187.8	184.2	68.9	186.5	238	67	67	63		1.001	2.636	310
533	84.961	85.687		0.16	0.16	1.32	1.06	0.24	75	75	63	1.92	1.40	71	0.013	103	103	81.2	-0.17	0.33		118.0	187.9	184.2	68.7	186.7	232	66	67	63		1.001	2.735	323
534	85.120	85.847		0.16	0.16	1.32	1.06	0.24	75	75	63	1.91	1.40	70	0.015	96	96	81.1	0.14	0.34		118.4	188.0	184.3	68.3	186.7	226	66	67	63		1.001	2.852	338
535	85.279	86.008		0.16	0.16	1.32	1.06	0.24	75	75	62	1.90	1.40	70	0.012	108	108	81.2	-0.13	0.37		119.0	188.1	184.4	68.0	187.0	221	66	67	62		1.001	3.110	371
536	85.439	86.168		0.16	0.16	1.32	1.06	0.24	75	75	62	1.91	1.40	69	0.014	100	99	81.1	0.07	0.34		119.1	188.3	184.5	68.0	187.1	216	66	66	62		1.001	2.769	333
537	85.597	86.328		0.16	0.16	1.33	1.06	0.24	75	75	62	1.91	1.40	68	0.015	95	96	80.9	0.20	0.35		119.2	188.3	184.6	68.0	187.2	213	66	66	62		1.001	2.950	352
538	85.757	86.489		0.16	0.16	1.33	1.07	0.24	75	75	62	1.91	1.40	67	0.015	97	97	81.0	-0.08	0.37		119.7	188.4	184.7	67.6	187.3	209	66	66	62		1.001	3.111	373
539	85.916	86.650		0.16	0.16	1.33	1.06	0.24	75	75	62	1.92	1.40	67	0.015	96	97	81.1	-0.05	0.35		119.9	188.4	184.7	67.4	187.3	205	65	66	62		1.001	2.950	354
540	86.075	86.810		0.16	0.16	1.33	1.06	0.24	75	75	62	1.90	1.40	67	0.014	99	99	81.0	0.07	0.34		119.9	188.5	184.7	67.4	187.3	202	65	65	62		1.001	2.792	335
541	86.235	86.970		0.16	0.16	1.34	1.06	0.24	75	75	62	1.89	1.40	67	0.015	97	96	81.0	0.00	0.32		120.0	188.5	184.8	67.3	187.3	198	65	65	62		1.001	2.633	316
542	86.395	87.132		0.16	0.16	1.32	1.07	0.24	75	75	62	1.91	1.40	67	0.014	100	101	81.1	-0.07	0.34		119.4	188.5	184.8	67.9	187.3	194	65	65	62		1.001	2.792	334
543	86.554	87.292		0.16	0.16	1.32	1.06	0.24	75	75	62	1.90	1.40	66	0.015	96	96	81.0	0.09	0.36		119.6	188.5	184.8	67.7	187.3	190	65	65	62		1.001	2.958	354
544	86.713	87.453		0.16	0.16	1.32	1.07	0.24	75	75	62	1.91	1.40	66	0.015	96	96	81.0	-0.05	0.34		119.5	188.4	184.7	67.7	187.3	186	65	65	62		1.001	2.795	334
545	86.872	87.614		0.16	0.16	1.33	1.07	0.24	75	75	62	1.90	1.40	66	0.015	96	96	81.1	-0.03	0.32		120.1	188.4	184.7	67.4	187.4	183	64	65	62		1.001	2.635	317
546	87.031	87.774		0.16	0.16	1.32	1.06	0.24	75	75	62	1.91	1.40	66	0.014	99	99	81.0	0.04	0.35		119.8	188.4	184.7	67.4	187.3	179	64	65	62		1.001	2.954	354
547	87.191	87.934		0.16	0.16	1.33	1.07	0.24	75	75	61	1.90	1.40	66	0.013	104	103	81.1	-0.01	0.35		119.8	188.4	184.7	67.6	187.4	175	64	64	61		1.001	2.954	354
548	87.350	88.095		0.16	0.16	1.33	1.07	0.24	75	75	61	1.90	1.40	66	0.014	99	100	81.0	0.06	0.35		120.0	188.3	184.6	67.2	187.1	172	64	64	61		1.001	2.955	355

Elapsed Time	Particulate Sampling Data																	Fuel Weight, lb		Flow, gpm		Temperature Data, oF												
	Gas Meter Cubic Feet (1)	Gas Meter Cubic Feet (2)	Gas Meter Cubic Feet (amb)	Sample Rate, cfm (1)	Sample Rate, cfm (2)	Orifice dH (1)	Orifice dH (2)	Orifice dH (amb)	Meter oF (1)	Meter oF (2)	Meter oF (amb)	Meter Vac. in. Hg. (1)	Meter Vac. in. Hg. (2)	Dilution Tunnel Temp.	Dilution Tunnel dP	Pro. Rate (%) (1)	Pro. Rate (%) (2)	Scale Reading	Weight Change	Load Side Liquid Flow Rate	Boiler Side Liquid Flow Rate (optional)	Thermopile ΔT	Boiler to Heat Exch. Temp.	Heat Exch to Boiler Temp.	Inlet Load Temp.	Outlet Load Temp.	Stack	Filter (1)	Filter (2)	Ambient		Specific Heat of Inlet Water (BTU/lb-°F)	Mass Flow Rate of Inlet Water (lb/min)	Heat Output, Btu
549	87.509	88.256		0.16	0.16	1.33	1.06	0.24	75	75	61	1.89	1.40	65	0.014	99	100	81.1	-0.09	0.35		119.9	188.3	184.6	67.3	187.2	170	64	64	61		1.001	2.950	354
550	87.669	88.417		0.16	0.16	1.33	1.07	0.24	75	75	61	1.89	1.40	65	0.014	100	100	81.1	-0.02	0.34		119.8	188.3	184.5	67.4	187.1	167	64	64	61		1.001	2.796	335
551	87.828	88.578		0.16	0.16	1.33	1.07	0.24	75	75	61	1.91	1.40	67	0.015	96	97	81.1	0.02	0.34		119.6	188.2	184.5	67.5	187.1	164	64	64	61		1.001	2.798	335
552	87.988	88.739		0.16	0.16	1.33	1.06	0.24	75	75	61	1.91	1.40	66	0.015	96	96	81.1	0.00	0.32		119.5	188.2	184.4	67.5	187.1	161	64	64	61		1.001	2.647	317
553	88.148	88.899		0.16	0.16	1.33	1.07	0.24	75	74	61	1.91	1.40	66	0.016	93	93	81.2	-0.12	0.37		119.6	188.1	184.3	67.4	187.0	158	63	64	61		1.001	3.121	374
554	88.307	89.060		0.16	0.16	1.33	1.07	0.24	75	75	61	1.91	1.40	65	0.014	99	100	81.1	0.15	0.36		119.5	188.0	184.3	67.6	187.1	155	63	64	61		1.001	2.956	354
555	88.467	89.221		0.16	0.16	1.32	1.06	0.24	75	74	61	1.89	1.40	65	0.014	100	100	81.1	-0.05	0.34		119.3	187.9	184.2	67.8	187.0	153	63	64	61		1.001	2.843	339
556	88.626	89.382		0.16	0.16	1.33	1.06	0.24	75	74	61	1.91	1.40	65	0.014	99	100	81.0	0.15	0.34		119.1	187.9	184.2	67.8	186.8	150	63	63	61		1.001	2.795	333
557	88.785	89.542		0.16	0.16	1.33	1.07	0.24	75	74	62	1.89	1.40	65	0.016	93	93	81.1	-0.12	0.36		119.1	187.9	184.2	67.7	186.8	148	63	63	62		1.001	2.957	352
558	88.944	89.703		0.16	0.16	1.33	1.07	0.24	75	74	62	1.89	1.40	66	0.012	107	108	81.1	-0.01	0.28		119.4	187.8	184.1	67.2	186.6	146	63	63	62		1.001	2.323	276
559	89.104	89.864		0.16	0.16	1.33	1.07	0.24	75	74	62	1.91	1.40	66	0.014	100	100	81.2	-0.12	0.34		119.5	187.7	184.0	67.1	186.6	144	63	63	62		1.001	2.796	334
560	89.263	90.024		0.16	0.16	1.33	1.06	0.24	75	74	62	1.90	1.40	66	0.014	99	99	81.0	0.20	0.34		119.0	187.7	184.0	67.6	186.6	142	63	63	62		1.001	2.792	333
561	89.422	90.185		0.16	0.16	1.33	1.06	0.24	75	74	62	1.91	1.40	66	0.015	96	97	81.2	-0.16	0.32		118.4	187.5	183.8	67.9	186.4	140	63	63	62		1.001	2.636	313
562	89.582	90.346		0.16	0.16	1.32	1.07	0.24	75	74	62	1.90	1.40	66	0.014	100	100	81.0	0.18	0.35		118.7	187.5	183.8	67.6	186.3	138	63	63	62		1.001	2.954	351
563	89.742	90.506		0.16	0.16	1.33	1.07	0.24	75	74	62	1.91	1.40	66	0.015	96	96	81.2	-0.16	0.34		118.8	187.3	183.6	67.4	186.2	136	63	63	62		1.001	2.793	332
564	89.901	90.667		0.16	0.16	1.33	1.07	0.24	75	74	63	1.89	1.40	66	0.015	96	97	81.3	-0.10	0.37		118.3	187.3	183.6	67.8	186.1	135	63	63	63		1.001	3.110	368
565	90.061	90.828		0.16	0.16	1.33	1.07	0.24	75	74	63	1.90	1.40	66	0.014	100	100	81.2	0.03	0.32		118.3	187.1	183.5	67.8	186.1	133	63	63	63		1.001	2.635	312
566	90.220	90.988		0.16	0.16	1.33	1.06	0.24	75	74	63	1.89	1.40	66	0.014	99	99	81.0	0.26	0.34		118.3	187.0	183.4	67.6	185.9	131	63	63	63		1.001	2.798	331
567	90.379	91.148		0.16	0.16	1.32	1.06	0.24	75	74	63	1.92	1.40	76	0.014	100	100	80.9	0.07	0.32		118.3	187.0	183.3	67.6	185.9	154	64	65	63		1.001	2.635	312
568	90.538	91.309		0.16	0.16	1.33	1.06	0.24	75	74	63	1.92	1.40	76	0.013	104	105	80.7	0.22	0.36		117.6	186.7	183.1	68.0	185.6	182	64	65	63		1.001	2.955	348
569	90.697	91.469		0.16	0.16	1.33	1.06	0.24	75	74	63	1.91	1.40	69	0.014	100	100	80.8	-0.14	0.32		118.1	186.4	182.9	67.5	185.5	170	63	64	63		1.001	2.634	311
570	90.856	91.629		0.16	0.16	1.33	1.06	0.24	75	74	63	1.89	1.40	67	0.015	96	96	80.7	0.06	0.34		117.4	186.4	182.8	67.9	185.4	157	64	64	63		1.001	2.792	328
571	91.015	91.790		0.16	0.16	1.33	1.07	0.24	75	74	63	1.91	1.40	67	0.014	99	100	80.8	-0.06	0.37		117.1	186.3	182.7	68.1	185.2	148	64	64	63		1.001	3.113	365
572	91.175	91.951		0.16	0.16	1.34	1.06	0.24	75	74	63	1.91	1.40	67	0.014	100	100	80.7	0.10	0.34		117.2	186.3	182.7	68.0	185.2	143	64	64	63		1.001	2.794	328
573	91.335	92.111		0.16	0.16	1.33	1.06	0.24	75	74	63	1.90	1.40	67	0.015	97	96	80.7	0.03	0.34		117.7	186.2	182.6	67.5	185.1	139	64	64	63		1.001	2.798	330
574	91.495	92.272		0.16	0.16	1.33	1.07	0.24	75	74	63	1.89	1.40	67	0.015	97	97	80.6	0.11	0.34		117.2	186.0	182.5	67.8	185.0	136	64	64	63		1.001	2.796	328
575	91.654	92.433		0.16	0.16	1.32	1.07	0.24	75	74	63	1.91	1.40	67	0.013	103	104	80.7	-0.17	0.34		116.9	186.0	182.4	68.0	184.9	133	64	64	63		1.001	2.800	328
576	91.813	92.593		0.16	0.16	1.32	1.06	0.24	75	74	63	1.89	1.40	67	0.012	107	107	80.8	-0.09	0.34		116.1	185.8	182.3	68.7	184.8	131	64	64	63		1.001	2.798	325
577	91.972	92.753		0.16	0.16	1.33	1.06	0.24	75	74	63	1.91	1.40	67	0.015	96	96	80.6	0.19	0.37		116.1	185.8	182.2	68.6	184.7	129	64	64	63		1.001	3.102	361
578	92.131	92.914		0.16	0.16	1.33	1.07	0.24	75	74	63	1.89	1.40	67	0.015	96	97	80.9	-0.22	0.32		116.0	185.7	182.1	68.7	184.7	127	64	64	63		1.001	2.657	309
579	92.290	93.075		0.16	0.16	1.33	1.06	0.24	75	74	63	1.90	1.40	67	0.013	103	104	80.7	0.19	0.32		115.7	185.6	182.0	68.9	184.6	126	64	64	63		1.001	2.631	305
580	92.450	93.235		0.16	0.16	1.33	1.06	0.24	75	74	63	1.91	1.40	67	0.015	97	96	80.7	0.01	0.35		115.3	185.5	181.9	69.1	184.4	124	64	64	63		1.001	2.952	341
581	92.609	93.396		0.16	0.16	1.33	1.06	0.24	75	74	63	1.90	1.40	69	0.014	100	100	80.7	-0.07	0.35		115.9	185.4	181.8	68.4	184.4	123	64	64	63		1.001	2.948	342
582	92.769	93.557		0.16	0.16	1.33	1.06	0.24	75	74	64	1.89	1.40	69	0.015	97	97	80.7	0.05	0.32		115.6	185.2	181.7	68.6	184.2	122	64	64	64		1.001	2.634	305
583	92.929	93.717		0.16	0.16	1.33	1.06	0.24	75	75	64	1.91	1.40	68	0.014	100	99	80.7	-0.02	0.34		115.0	185.1	181.6	69.1	184.1	120	64	64	64		1.001	2.793	322
584	93.088	93.877		0.16	0.16	1.33	1.06	0.24	75	75	63	1.90	1.40	67	0.015	96	96	80.7	0.01	0.30		115.0	185.1	181.5	69.1	184.0	119	64	64	63		1.001	2.475	285
585	93.247	94.038		0.16	0.16	1.33	1.06	0.24	75	75	63	1.91	1.40	67	0.015	96	97	80.8	-0.14	0.32		115.4	185.0	181.5	68.6	184.0	118	64	64	63		1.001	2.636	305
586	93.407	94.198		0.16	0.16	1.32	1.06	0.24	75	75	63	1.89	1.40	67	0.013	104	103	80.7	0.08	0.36		115.1	184.9	181.3	68.9	184.0	117	64	64	63		1.001	2.957	341
587	93.565	94.359		0.16	0.16	1.32	1.07	0.24	75	75	63	1.90	1.40	67	0.014	99	100	80.7	0.05	0.36		115.2	184.8	181.2	68.7	183.9	116	64	64	63		1.001	2.954	341
588	93.725	94.520		0.16	0.16	1.33	1.07	0.24	75	75	63	1.89	1.40	67	0.014	100	100	80.7	-0.03	0.34		115.3	184.6	181.1	68.4	183.8	115	64	64	63		1.001	2.795	323
589	93.884	94.680		0.16	0.16	1.32	1.06	0.24	75	75	63	1.89	1.40	66	0.013	103	103	80.7	-0.01	0.36		115.3	184.5	180.9	68.2	183.5	114	64	64	63		1.001	2.956	341
590	94.043	94.840		0.16	0.16	1.34	1.07	0.24	75	75	63	1.89	1.40	66	0.012	107	107	80.7	0.04	0.34		115.3	184.4	180.8	68.0	183.3	113	64	64	63		1.001	2.791	322
591	94.202	95.001		0.16	0.16	1.33	1.06	0.24	75	75	63	1.91	1.40	66	0.015	96	96	80.7	0.00	0.34		115.0	184.2	180.7	68.1	183.1	112	64	64	63		1.001	2.790	321
592	94.362	95.162		0.16	0.16	1.33	1.06	0.24	75	75	63	1.89	1.40	66	0.013	104	104	80.6	0.05	0.32		115.3	184.1	180.5	67.7	183.0	112	64	64	63		1.001	2.632	304
593	94.521	95.322		0.16	0.16	1.33	1.06	0.24	75	75	62	1.90	1.40	65	0.012	107	107	80.6	0.02	0.32		115.6	184.0	180.4	67.3	182.9	111	64	64	62		1.001	2.632	305
594	94.681	95.483		0.16	0.16	1.33	1.07	0.24	75	75	62	1.90	1.40	65	0.015	96	96	80.7	-0.06	0.32		115.3	183.9	180.3	67.4	182.7	111	64	64	62		1.001	2.631	304
595	94.840	95.644		0.16	0.16	1.33	1.06	0.24	75	75	62	1.89	1.40	65	0.016	93	93	80.7	-0.01	0.34		115.6	183.7	180.1	67.1	182.7	110	64	64	62		1.001	2.790	323
596	95.000	95.804		0.16	0.16	1.32	1.07	0.24	75	75	62	1.89	1.40	65	0.012	108	107	80.6	0.06	0.34		115.5	183.5	180.0	67.0	182.5	109	64	64	62		1.001	2.793	323
597	95.159	95.965		0.16	0.16	1.32	1.07	0.24	75	75	62	1.89	1.40	65	0.015	96	96	80.7	-0.09	0.32		115.5	183.5	179.9	67.0	182.5	108	63	64	62		1.001	2.641	305
598	95.318	96.127		0.16	0.16	1.33	1.07	0.24	75	75	62	1.90	1.40	65	0.014	99	100	80.5	0.21	0.32		115.0	183.3	179.8	67.2	182.1	108	63	63	62		1.001	2.635	303
599	95.477	96.286		0.16	0.16	1.32	1.05	0.24	75	75	62	1.91	1.40	74	0.014	100	99	80.3	0.19	0.32		114.8	183.1	179.6	67.3	182.2	145	64	64	62		1.001	2.636	303
600	95.636	96.446		0.16	0.16	1.33	1.07	0.24	75	75	62	1.89	1.40	69	0.013	103	103	80.6	-0.24	0.32		114.7	182.9	179.4	67.2	181.9	158	63	63	62		1.001	2.688	309
601	95.795	96.608		0.16	0.16	1.33	1.07	0.24	75	75	62	1.89	1.40	66	0.016	93	94	80.5	0.11	0.34		114.4	182.9	179.3	67.4	181.7	140	63	63	62		1.001	2.795	320
602	95.955	96.769		0.16	0.16	1.33	1.06	0.24	75	75	62	1.91	1.40	65	0.013	104	103	80.5	-0.04	0.32		114.3	182.7	179.2	67.4	181.7	130	63	63	62		1.001	2.636	302
603	96.114	96.929		0.16	0.16	1.34	1.07	0.24	75	75	61	1.91	1.40	65	0.014	99	99	80.5	0.03	0.30		114.4	182.6	179.0	67.0	181.4	123	63	63	61		1.001	2.475	284
604	96.274	97.089		0.16	0.16	1.33	1.07	0.24	75	75	62	1.91	1.40	65	0.013	104	103	80.4	0.04	0.35		114.6	182.4	178.9	66.9	181.5	119	63	63	62		1.001	2.954	339
605	96.434	97.251		0.16	0.16	1.33	1.06	0.24	75	75	61	1.90	1.40	64	0.013	103	104	80.2	0.18	0.36		114.4	182.3	178.7	66.8	181.2	116	63	63	61		1.001	2.957	339
606	96.593	97.411		0.16	0.16	1.33	1.07	0.24	75	75	61	1.89	1.40	66	0.014	99	99	80.5	-0.23	0.32		114.5	182.1	178.6	66.5	181.0	114	63	63	61		1.001	2.638	302
607	96.753	97.572		0.16	0.16	1.33	1.06	0.24	75	75	61	1.90	1.40	65	0.015	96	96	80.5	-0.01	0.36		114.5	182.0	178.5	66.4	181.0	112	63	63	61		1.001	2.959	339
608	96.912	97.734		0.16	0.16	1.33	1.07	0.24	75	75	61	1.89	1.40	64	0.013	103	104	80.4	0.03	0.36		114.7	181.9	178.4	66.1	180.8	111	63	63	61		1.001	2.959	340
609	97.071	97.894		0.16	0.16	1.32	1.06	0.24	75	74	61	1.89	1.40	64	0.014	99	99	80.5	-0.08	0.32		114.2	181.8	178.2	66.7	180.9	109	63	63	61		1.001	2.639	302
610	97.231	98.055		0.16	0.16	1.33	1.07	0.24	75	74	61	1.89	1.40	64	0.013	103	104	80.4	0.16	0.32		113.7	181.6	178.1	67.0	180.6	108	63	63	61		1.001	2.640	300

Elapsed Time	Particulate Sampling Data																	Fuel Weight, lb		Flow, gpm		Temperature Data, oF												
	Gas Meter Cubic Feet (1)	Gas Meter Cubic Feet (2)	Gas Meter Cubic Feet (amb)	Sample Rate, cfm (1)	Sample Rate, cfm (2)	Orifice dH (1)	Orifice dH (2)	Orifice dH (amb)	Meter oF (1)	Meter oF (2)	Meter oF (amb)	Meter Vac. in. Hg. (1)	Meter Vac. in. Hg. (2)	Dilution Tunnel Temp.	Dilution Tunnel dP	Pro. Rate (%) (1)	Pro. Rate (%) (2)	Scale Reading	Weight Change	Load Side Liquid Flow Rate	Boiler Side Liquid Flow Rate (optional)	Thermopile ΔT	Boiler to Heat Exch. Temp.	Heat Exch to Boiler Temp.	Inlet Load Temp.	Outlet Load Temp.	Stack	Filter (1)	Filter (2)	Ambient		Specific Heat of Inlet Water (BTU/lb-°F)	Mass Flow Rate of Inlet Water (lb/min)	Heat Output, Btu
611	97.390	98.215		0.16	0.16	1.33	1.07	0.24	75	74	62	1.90	1.40	64	0.016	93	93	80.5	-0.13	0.34		114.2	181.5	178.0	66.3	180.5	108	63	63	62		1.001	2.799	320
612	97.549	98.377		0.16	0.16	1.34	1.07	0.24	75	74	62	1.91	1.40	65	0.016	93	94	80.5	0.01	0.34		113.6	181.3	177.8	66.7	180.3	107	63	63	62		1.001	2.798	318
613	97.709	98.537		0.16	0.16	1.34	1.06	0.24	75	74	62	1.89	1.40	65	0.014	100	99	80.6	-0.14	0.37		113.2	181.2	177.7	66.9	180.1	106	63	63	62		1.001	3.120	354
614	97.868	98.698		0.16	0.16	1.33	1.07	0.24	75	74	62	1.89	1.40	65	0.014	99	100	80.4	0.18	0.36		113.0	181.0	177.5	66.8	179.9	105	63	63	62		1.001	2.959	335
615	98.028	98.860		0.16	0.16	1.33	1.06	0.24	75	74	62	1.89	1.40	65	0.014	100	101	80.4	0.00	0.32		112.7	181.0	177.5	67.3	180.0	104	63	63	62		1.001	2.640	298
616	98.188	99.019		0.16	0.16	1.34	1.07	0.24	75	74	62	1.90	1.40	65	0.015	96	95	80.4	0.03	0.30		112.4	180.9	177.4	67.2	179.7	103	63	63	62		1.001	2.486	280
617	98.347	99.180		0.16	0.16	1.33	1.07	0.24	75	74	62	1.91	1.40	66	0.013	103	104	80.5	-0.04	0.34		112.4	180.7	177.3	67.2	179.6	103	63	63	62		1.001	2.800	315
618	98.507	99.341		0.16	0.16	1.32	1.07	0.24	75	74	62	1.90	1.40	66	0.015	96	97	80.4	0.05	0.34		112.6	180.5	177.1	66.9	179.6	102	63	63	62		1.001	2.794	315
619	98.666	99.502		0.16	0.16	1.33	1.06	0.24	75	74	62	1.90	1.40	66	0.013	103	104	80.5	-0.10	0.34		112.4	180.4	177.0	67.0	179.4	101	63	63	62		1.001	2.791	314
620	98.825	99.662		0.16	0.16	1.33	1.07	0.24	75	74	62	1.90	1.40	66	0.013	103	103	80.3	0.21	0.36		111.8	180.3	176.9	67.5	179.3	101	63	63	62		1.001	2.957	331
621	98.984	99.823		0.16	0.16	1.33	1.07	0.24	75	74	63	1.91	1.40	66	0.017	90	91	80.3	-0.03	0.33		111.2	180.1	176.7	67.9	179.0	101	63	63	63		1.001	2.765	308
622	99.144	99.984		0.16	0.16	1.34	1.06	0.24	75	74	63	1.89	1.40	66	0.015	96	97	80.4	-0.10	0.30		111.7	180.0	176.6	67.2	178.9	100	63	63	63		1.001	2.514	281
623	99.303	100.144		0.16	0.16	1.33	1.07	0.24	75	74	63	1.89	1.40	66	0.014	99	99	80.3	0.10	0.33		111.4	179.8	176.4	67.3	178.7	99	63	63	63		1.001	2.726	304
624	99.462	100.305		0.16	0.16	1.33	1.07	0.24	75	74	63	1.91	1.40	66	0.015	96	97	80.3	0.01	0.33		111.2	179.6	176.2	67.4	178.6	98	63	63	63		1.001	2.739	305
625	99.622	100.467		0.16	0.16	1.34	1.07	0.24	75	74	63	1.90	1.40	67	0.014	100	101	80.4	-0.10	0.36		111.0	179.5	176.1	67.4	178.4	98	63	63	63		1.001	2.991	332
626	99.782	100.626		0.16	0.16	1.33	1.06	0.24	75	74	63	1.90	1.40	66	0.014	100	99	80.5	-0.08	0.34		110.8	179.4	176.0	67.5	178.3	98	63	63	63		1.001	2.853	317
627	99.941	100.787		0.16	0.16	1.33	1.07	0.24	75	74	63	1.91	1.40	66	0.013	103	104	80.4	0.12	0.32		110.8	179.3	175.9	67.6	178.3	98	63	63	63		1.001	2.638	292
628	100.101	100.948		0.16	0.16	1.32	1.07	0.24	75	74	63	1.89	1.40	66	0.014	100	100	80.4	0.01	0.32		110.6	179.1	175.7	67.7	178.2	96	63	63	63		1.001	2.636	292
629	100.260	101.109		0.16	0.16	1.33	1.06	0.24	75	74	63	1.89	1.40	67	0.014	99	100	80.5	-0.07	0.34		110.5	178.9	175.5	67.5	178.0	97	63	63	63		1.001	2.795	309
630	100.419	101.269		0.16	0.16	1.32	1.06	0.24	75	74	63	1.90	1.40	69	0.013	103	103	80.5	0.01	0.34		110.3	178.9	175.5	67.5	177.8	120	64	64	63		1.001	2.794	309
631	100.578	101.429		0.16	0.16	1.33	1.06	0.24	75	74	63	1.90	1.40	72	0.013	104	104	80.3	0.18	0.37		110.1	178.7	175.4	67.8	177.9	138	64	64	63		1.001	3.116	343
632	100.737	101.590		0.16	0.16	1.33	1.06	0.24	75	74	63	1.90	1.40	68	0.013	103	104	80.3	-0.02	0.32		109.9	178.5	175.2	67.8	177.7	135	63	64	63		1.001	2.636	290
633	100.896	101.750		0.16	0.16	1.33	1.06	0.24	75	74	63	1.91	1.40	67	0.015	96	96	80.3	-0.01	0.34		109.4	178.3	175.0	68.0	177.4	125	63	64	63		1.001	2.795	306
634	101.056	101.910		0.16	0.16	1.33	1.07	0.24	75	74	63	1.89	1.40	67	0.015	97	96	80.3	-0.03	0.36		108.9	178.2	174.9	68.2	177.1	118	64	64	63		1.001	2.957	322
635	101.215	102.072		0.16	0.16	1.33	1.06	0.24	75	74	63	1.90	1.40	67	0.014	99	101	80.3	0.01	0.35		109.4	178.1	174.8	68.0	177.4	113	64	64	63		1.001	2.952	323
636	101.375	102.232		0.16	0.16	1.33	1.06	0.24	75	74	63	1.91	1.40	69	0.015	97	96	80.3	0.04	0.34		109.3	178.0	174.6	67.8	177.1	111	64	64	63		1.001	2.795	306
637	101.535	102.392		0.16	0.16	1.33	1.06	0.24	75	74	63	1.91	1.40	68	0.013	104	103	80.2	0.09	0.32		109.0	177.9	174.5	68.0	177.0	108	64	64	63		1.001	2.633	287
638	101.694	102.554		0.16	0.16	1.33	1.06	0.24	75	75	63	1.90	1.40	67	0.013	103	104	80.3	-0.12	0.34		108.9	177.7	174.4	68.0	176.9	106	64	64	63		1.001	2.793	304
639	101.853	102.713		0.16	0.16	1.33	1.06	0.24	75	75	63	1.89	1.40	67	0.014	99	99	80.3	-0.03	0.34		108.7	177.5	174.2	67.8	176.6	104	64	64	63		1.001	2.794	304
640	102.012	102.874		0.16	0.16	1.33	1.07	0.24	75	75	63	1.90	1.40	67	0.014	99	100	80.4	-0.04	0.34		108.4	177.3	174.0	68.0	176.4	103	64	64	63		1.001	2.796	303
641	102.171	103.035		0.16	0.16	1.32	1.07	0.24	75	75	63	1.90	1.40	66	0.015	96	96	80.3	0.12	0.32		107.9	177.2	173.9	68.4	176.3	101	64	64	63		1.001	2.636	285
642	102.330	103.195		0.16	0.16	1.33	1.06	0.24	75	75	63	1.89	1.40	66	0.014	99	99	80.1	0.14	0.37		108.0	177.1	173.8	68.1	176.1	101	64	64	63		1.001	3.113	336
643	102.490	103.356		0.16	0.16	1.33	1.07	0.24	75	75	63	1.89	1.40	66	0.014	100	100	80.3	-0.14	0.32		108.2	176.9	173.6	67.7	175.9	100	64	64	63		1.001	2.635	285
644	102.649	103.516		0.16	0.16	1.33	1.06	0.24	75	75	63	1.89	1.40	66	0.015	96	96	80.3	-0.07	0.33		108.2	176.8	173.5	67.5	175.7	99	64	64	63		1.001	2.747	298
645	102.808	103.677		0.16	0.16	1.33	1.06	0.24	75	75	63	1.91	1.40	66	0.015	96	96	80.2	0.11	0.34		108.1	176.7	173.4	67.6	175.8	98	64	64	63		1.001	2.792	302
646	102.968	103.837		0.16	0.16	1.32	1.06	0.24	75	75	63	1.90	1.40	65	0.014	100	99	80.2	0.04	0.34		108.5	176.5	173.1	66.9	175.4	98	64	64	63		1.001	2.791	303
647	103.128	103.998		0.16	0.16	1.33	1.07	0.24	75	75	63	1.89	1.40	65	0.014	100	100	80.3	-0.14	0.33		108.2	176.4	173.0	67.3	175.5	97	64	64	63		1.001	2.714	294
648	103.287	104.160		0.16	0.16	1.33	1.07	0.24	75	75	62	1.90	1.40	65	0.013	103	104	80.2	0.09	0.34		107.9	176.2	172.8	67.3	175.2	97	63	64	62		1.001	2.791	301
649	103.447	104.319		0.16	0.16	1.32	1.06	0.24	75	75	62	1.89	1.40	65	0.013	104	102	80.3	-0.09	0.34		107.9	176.0	172.7	67.1	175.0	97	63	64	62		1.001	2.863	309
650	103.606	104.480		0.16	0.16	1.33	1.07	0.24	75	75	62	1.89	1.40	65	0.016	93	93	80.2	0.11	0.35		107.9	175.9	172.6	67.1	175.0	96	63	63	62		1.001	2.952	319
651	103.765	104.641		0.16	0.16	1.33	1.07	0.24	75	75	62	1.89	1.40	65	0.014	99	100	80.3	-0.10	0.34		108.0	175.8	172.4	66.9	174.9	95	63	63	62		1.001	2.791	302
652	103.924	104.802		0.16	0.16	1.33	1.06	0.24	75	75	62	1.89	1.40	65	0.016	93	93	80.2	0.09	0.30		108.2	175.6	172.3	66.4	174.7	95	63	63	62		1.001	2.473	268
653	104.083	104.962		0.16	0.16	1.33	1.07	0.24	75	75	62	1.89	1.40	64	0.014	99	99	80.3	-0.05	0.35		108.0	175.5	172.1	66.4	174.4	94	63	63	62		1.001	2.954	319
654	104.243	105.123		0.16	0.16	1.33	1.06	0.24	75	75	62	1.89	1.40	64	0.015	96	96	80.3	0.01	0.34		107.8	175.3	172.0	66.4	174.2	94	63	63	62		1.001	2.799	302
655	104.402	105.284		0.16	0.16	1.33	1.06	0.24	75	75	62	1.88	1.40	64	0.012	107	108	80.2	0.05	0.34		107.8	175.2	171.8	66.6	174.4	94	63	63	62		1.001	2.795	302
656	104.562	105.445		0.16	0.16	1.34	1.07	0.24	75	74	62	1.89	1.40	64	0.013	103	104	80.3	-0.10	0.35		107.7	175.0	171.7	66.3	174.0	93	63	63	62		1.001	2.955	319
657	104.722	105.606		0.16	0.16	1.33	1.07	0.24	75	75	61	1.90	1.40	66	0.015	96	96	80.5	-0.14	0.34		107.5	174.8	171.5	65.9	173.8	93	63	63	61		1.001	2.798	302
658	104.881	105.767		0.16	0.16	1.32	1.07	0.24	75	75	61	1.89	1.40	65	0.015	96	96	80.3	0.18	0.34		107.8	174.7	171.4	65.9	173.7	92	63	63	61		1.001	2.796	302
659	105.040	105.928		0.16	0.16	1.33	1.06	0.24	75	74	61	1.90	1.40	64	0.014	99	100	80.2	0.05	0.36		107.3	174.6	171.3	66.2	173.5	92	63	63	61		1.001	2.958	318
660	105.200	106.088		0.16	0.16	1.32	1.06	0.24	75	74	61	1.90	1.40	64	0.011	112	112	80.1	0.13	0.36		107.8	174.4	171.2	65.7	173.6	91	63	63	61		1.001	2.958	319
661	105.359	106.249		0.16	0.16	1.33	1.06	0.24	75	74	61	1.89	1.40	64	0.014	99	100	80.3	-0.15	0.37		108.0	174.3	171.0	65.4	173.4	91	63	63	61		1.001	3.116	337
662	105.518	106.410		0.16	0.16	1.33	1.06	0.24	75	74	62	1.89	1.40	69	0.014	100	100	80.2	0.01	0.36		107.6	174.1	170.8	65.5	173.1	126	63	63	62		1.001	2.960	319
663	105.678	106.570		0.16	0.16	1.33	1.06	0.24	75	74	62	1.90	1.40	67	0.015	97	96	80.1	0.16	0.36		107.1	173.9	170.7	65.8	173.0	136	63	63	62		1.001	2.963	318
664	105.837	106.731		0.16	0.16	1.34	1.07	0.24	75	74	62	1.91	1.40	65	0.014	99	100	80.2	-0.08	0.34		107.3	173.8	170.5	65.5	172.8	123	63	63	62		1.001	2.794	300
665	105.996	106.893		0.16	0.16	1.33	1.07	0.24	75	74	62	1.89	1.40	65	0.014	99	101	80.2	-0.03	0.34		107.0	173.7	170.4	65.7	172.7	116	63	63	62		1.001	2.794	299
666	106.156	107.053		0.16	0.16	1.34	1.06	0.24	75	74	62	1.89	1.40	65	0.015	96	96	80.2	0.01	0.30		107.0	173.5	170.3	65.6	172.6	110	63	63	62		1.001	2.479	266
667	106.316	107.214		0.16	0.16	1.34	1.07	0.24	75	74	62	1.90	1.40	65	0.014	100	100	80.1	0.06	0.34		106.4	173.3	170.1	66.0	172.3	107	63	63	62		1.001	2.791	297
668	106.476	107.375		0.16	0.16	1.33	1.07	0.24	75	74	62	1.91	1.40	65	0.014	100	100	80.2	-0.04	0.33		106.0	173.2	169.9	66.3	172.3	104	63	63	62		1.001	2.746	291
669	106.635	107.536		0.16	0.16	1.33	1.06	0.24	75	74	63	1.89	1.40	66	0.015	96	97	80.1	0.09	0.34		106.1	173.0	169.8	66.1	172.2	102	63	63	63		1.001	2.800	297
670	106.795	107.696		0.16	0.16	1.33	1.07	0.24	75	74	63	1.91	1.40	68	0.017	91	90	80.1	-0.01	0.36		105.8	172.9	169.7	66.2	172.1	100	63	63	63		1.001	2.971	315
671	106.954	107.857		0.16	0.16	1.33	1.07	0.24	75	74	63	1.91	1.40	66	0.013	103	104	80.0	0.10	0.34		105.5	172.7	169.5	66.2	171.8	99	63	63	63		1.001	2.798	296
672	107.113	108.018		0.16	0.16	1.33	1.06	0.24	75	74	63	1.91	1.40	66	0.014	99	100	80.2	-0.22	0.33		105.2	172.5	169.4	66.4	171.6	97	63	63	63		1.001	2.707	285

Elapsed Time	Particulate Sampling Data																	Fuel Weight, lb		Flow, gpm		Temperature Data, oF												
	Gas Meter Cubic Feet (1)	Gas Meter Cubic Feet (2)	Gas Meter Cubic Feet (amb)	Sample Rate, cfm (1)	Sample Rate, cfm (2)	Orifice dH (1)	Orifice dH (2)	Orifice dH (amb)	Meter oF (1)	Meter oF (2)	Meter oF (amb)	Meter Vac. in. Hg. (1)	Meter Vac. in. Hg. (2)	Dilution Tunnel Temp.	Dilution Tunnel dP	Pro. Rate (%) (1)	Pro. Rate (%) (2)	Scale Reading	Weight Change	Load Side Liquid Flow Rate	Boiler Side Liquid Flow Rate (optional)	Thermopile ΔT	Boiler to Heat Exch. Temp.	Heat Exch to Boiler Temp.	Inlet Load Temp.	Outlet Load Temp.	Stack	Filter (1)	Filter (2)	Ambient		Specific Heat of Inlet Water (BTU/lb-°F)	Mass Flow Rate of Inlet Water (lb/min)	Heat Output, Btu
673	107.272	108.178		0.16	0.16	1.33	1.07	0.24	75	74	63	1.89	1.40	66	0.015	96	96	80.1	0.10	0.34		105.0	172.4	169.2	66.6	171.6	96	63	63	63		1.001	2.792	294
674	107.432	108.339		0.16	0.16	1.33	1.06	0.24	75	74	63	1.89	1.40	66	0.014	100	100	80.1	0.04	0.34		104.8	172.3	169.1	66.5	171.3	95	63	63	63		1.001	2.798	294
675	107.591	108.500		0.16	0.16	1.33	1.06	0.24	75	74	62	1.91	1.40	65	0.014	99	100	80.2	-0.08	0.36		105.2	172.1	169.0	66.1	171.2	95	63	63	62		1.001	2.959	312
676	107.751	108.660		0.16	0.16	1.34	1.06	0.24	75	74	62	1.89	1.40	65	0.015	96	96	80.2	0.02	0.35		104.8	172.0	168.8	66.2	171.0	94	63	63	62		1.001	2.953	310
677	107.910	108.821		0.16	0.16	1.34	1.07	0.24	75	74	62	1.90	1.40	65	0.013	103	104	80.1	0.03	0.32		104.9	171.9	168.7	66.0	170.9	93	63	63	62		1.001	2.639	277
678	108.070	108.982		0.16	0.16	1.33	1.07	0.24	75	74	62	1.90	1.40	65	0.015	96	97	80.2	-0.03	0.34		104.9	171.7	168.5	65.8	170.8	92	63	63	62		1.001	2.794	294
679	108.230	109.143		0.16	0.16	1.33	1.06	0.24	75	74	62	1.90	1.40	65	0.015	96	97	80.0	0.12	0.35		104.8	171.6	168.4	65.9	170.6	92	63	63	62		1.001	2.955	310
680	108.389	109.304		0.16	0.16	1.33	1.07	0.24	75	74	62	1.89	1.40	64	0.014	99	100	80.0	0.01	0.37		104.5	171.5	168.3	66.2	170.7	92	63	63	62		1.001	3.115	326
681	108.548	109.464		0.16	0.16	1.33	1.07	0.24	75	74	62	1.89	1.40	64	0.012	107	107	80.2	-0.17	0.34		104.4	171.3	168.1	65.9	170.4	91	63	63	62		1.001	2.796	292
682	108.708	109.626		0.16	0.16	1.32	1.07	0.24	75	74	62	1.89	1.40	64	0.014	100	100	80.1	0.10	0.32		104.8	171.1	168.0	65.5	170.2	91	63	63	62		1.001	2.637	277
683	108.867	109.786		0.16	0.16	1.33	1.07	0.24	75	74	62	1.89	1.40	64	0.015	96	96	80.1	0.02	0.35		104.4	171.0	167.8	65.6	170.0	90	63	63	62		1.001	2.955	309
684	109.026	109.947		0.16	0.16	1.33	1.07	0.24	75	74	62	1.89	1.40	64	0.014	99	100	80.0	0.06	0.34		104.5	170.8	167.6	65.3	169.8	90	63	63	62		1.001	2.794	292
685	109.186	110.108		0.16	0.16	1.33	1.07	0.24	75	74	61	1.89	1.40	64	0.014	100	100	80.2	-0.18	0.32		104.8	170.7	167.5	65.1	169.8	90	63	63	61		1.001	2.637	277
686	109.345	110.269		0.16	0.16	1.33	1.06	0.24	75	74	61	1.90	1.40	64	0.015	96	96	80.1	0.03	0.34		104.4	170.5	167.4	65.2	169.6	89	62	63	61		1.001	2.801	293
687	109.505	110.429		0.16	0.16	1.33	1.06	0.24	75	74	61	1.90	1.40	64	0.015	96	96	80.1	0.05	0.32		104.1	170.4	167.2	65.2	169.3	89	62	63	61		1.001	2.644	276
688	109.664	110.590		0.16	0.16	1.33	1.07	0.24	75	74	61	1.90	1.40	65	0.014	99	100	80.2	-0.13	0.37		103.7	170.3	167.1	65.6	169.3	88	62	63	61		1.001	3.120	324
689	109.824	110.751		0.16	0.16	1.33	1.06	0.24	75	74	61	1.91	1.40	64	0.012	108	108	80.2	0.02	0.32		103.6	170.1	167.0	65.6	169.2	88	62	62	61		1.001	2.642	274
690	109.984	110.912		0.16	0.16	1.33	1.06	0.24	75	74	61	1.91	1.40	64	0.014	100	100	80.0	0.21	0.34		103.3	169.9	166.8	65.7	169.1	87	62	62	61		1.001	2.795	289
691	110.143	111.073		0.16	0.16	1.33	1.07	0.24	75	74	61	1.90	1.40	64	0.015	96	96	80.1	-0.14	0.36		103.8	169.8	166.6	65.0	168.8	88	62	62	61		1.001	2.964	308
692	110.302	111.234		0.16	0.16	1.33	1.07	0.24	75	74	61	1.89	1.40	64	0.014	99	100	80.1	0.03	0.36		103.8	169.6	166.5	64.9	168.7	87	62	62	61		1.001	2.956	307
693	110.462	111.394		0.16	0.16	1.32	1.06	0.24	75	74	61	1.91	1.40	66	0.014	100	99	80.0	0.09	0.35		103.7	169.4	166.3	65.0	168.7	89	62	63	61		1.001	2.887	300
694	110.621	111.554		0.16	0.16	1.33	1.07	0.24	75	74	62	1.89	1.40	69	0.015	96	96	80.0	0.02	0.35		103.0	169.3	166.1	65.2	168.2	123	63	63	62		1.001	2.944	304
695	110.780	111.716		0.16	0.16	1.33	1.07	0.24	75	74	62	1.89	1.40	66	0.014	99	101	80.0	-0.04	0.30		103.0	169.2	166.0	65.3	168.3	125	62	63	62		1.001	2.494	257
696	110.940	111.877		0.16	0.16	1.32	1.06	0.24	75	74	62	1.90	1.40	65	0.014	100	100	80.1	-0.05	0.36		103.0	169.0	165.9	65.1	168.2	115	62	63	62		1.001	2.957	305
697	111.099	112.037		0.16	0.16	1.33	1.06	0.24	75	74	62	1.91	1.40	65	0.012	107	107	80.1	0.01	0.30		102.4	168.9	165.8	65.5	167.9	109	62	63	62		1.001	2.483	255
698	111.258	112.197		0.16	0.16	1.34	1.07	0.24	75	74	62	1.90	1.40	65	0.017	90	90	80.1	0.03	0.35		102.3	168.7	165.6	65.6	167.9	104	62	63	62		1.001	2.955	303
699	111.418	112.359		0.16	0.16	1.33	1.06	0.24	75	74	62	1.90	1.40	65	0.012	108	109	80.0	0.06	0.36		102.0	168.6	165.5	65.7	167.8	101	62	63	62		1.001	2.959	302
700	111.577	112.519		0.16	0.16	1.34	1.06	0.24	75	74	62	1.90	1.40	65	0.014	99	99	80.0	-0.05	0.34		101.5	168.5	165.4	66.0	167.5	99	63	63	62		1.001	2.796	284
701	111.737	112.680		0.16	0.16	1.33	1.06	0.24	75	74	62	1.90	1.40	65	0.013	104	104	80.1	-0.07	0.30		101.8	168.3	165.2	65.6	167.4	97	63	63	62		1.001	2.480	253
702	111.897	112.841		0.16	0.16	1.33	1.06	0.24	75	74	62	1.89	1.40	65	0.015	96	97	79.9	0.16	0.32		101.2	168.1	165.1	65.9	167.1	96	63	63	62		1.001	2.639	267
703	112.056	113.001		0.16	0.16	1.32	1.06	0.24	75	74	63	1.89	1.40	66	0.014	99	99	79.9	0.05	0.34		100.9	168.0	164.9	66.1	167.0	94	63	63	63		1.001	2.801	283
704	112.216	113.161		0.16	0.16	1.33	1.07	0.24	75	74	62	1.90	1.40	66	0.013	104	103	80.0	-0.11	0.30		101.0	167.8	164.8	66.0	167.0	94	63	63	62		1.001	2.482	251
705	112.374	113.323		0.16	0.16	1.33	1.06	0.24	75	74	63	1.90	1.40	66	0.015	95	97	80.0	-0.02	0.34		100.5	167.7	164.6	66.3	166.8	93	63	63	63		1.001	2.796	281
706	112.534	113.483		0.16	0.16	1.33	1.06	0.24	75	74	62	1.91	1.40	66	0.013	104	103	80.0	-0.03	0.32		100.4	167.5	164.5	66.1	166.5	92	63	63	62		1.001	2.639	265
707	112.693	113.644		0.16	0.16	1.33	1.07	0.24	75	74	63	1.89	1.40	66	0.015	96	97	79.9	0.10	0.34		100.1	167.4	164.3	66.2	166.3	91	63	63	63		1.001	2.799	281
708	112.852	113.804		0.16	0.16	1.33	1.06	0.24	75	74	63	1.89	1.40	66	0.013	103	103	80.0	-0.04	0.36		100.0	167.2	164.2	66.5	166.5	90	63	63	63		1.001	2.959	296
709	113.012	113.965		0.16	0.16	1.33	1.06	0.24	75	74	63	1.89	1.40	67	0.015	97	97	80.0	0.00	0.34		99.6	167.1	164.1	66.7	166.3	90	63	63	63		1.001	2.800	279
710	113.171	114.126		0.16	0.16	1.33	1.06	0.24	75	74	63	1.91	1.40	68	0.017	90	91	80.1	-0.09	0.32		99.3	166.9	163.9	66.7	166.1	89	63	63	63		1.001	2.640	263
711	113.331	114.286		0.16	0.16	1.33	1.06	0.24	75	74	63	1.90	1.40	67	0.014	100	99	80.0	0.09	0.28		99.4	166.8	163.8	66.6	166.0	89	63	63	63		1.001	2.335	232
712	113.491	114.448		0.16	0.16	1.33	1.06	0.24	75	74	63	1.89	1.40	66	0.013	104	104	80.1	-0.09	0.33		99.5	166.7	163.6	66.3	165.9	88	63	63	63		1.001	2.771	276
713	113.650	114.607		0.16	0.16	1.33	1.06	0.24	75	74	63	1.89	1.40	66	0.014	99	99	80.2	-0.09	0.32		99.2	166.5	163.5	66.4	165.6	88	63	63	63		1.001	2.638	262
714	113.809	114.768		0.16	0.16	1.33	1.07	0.24	75	74	63	1.89	1.40	66	0.012	107	108	80.0	0.11	0.36		99.0	166.4	163.4	66.5	165.4	88	63	63	63		1.001	2.960	293
715	113.968	114.929		0.16	0.16	1.32	1.06	0.24	75	74	62	1.89	1.40	66	0.015	96	97	79.9	0.13	0.29		99.0	166.2	163.2	66.4	165.4	87	63	63	62		1.001	2.394	237
716	114.127	115.089		0.16	0.16	1.33	1.06	0.24	75	74	62	1.90	1.40	65	0.013	103	103	80.1	-0.14	0.34		99.1	166.0	163.1	66.2	165.2	87	63	63	62		1.001	2.798	278
717	114.287	115.249		0.16	0.16	1.33	1.06	0.24	75	74	62	1.91	1.40	65	0.014	100	99	80.1	-0.07	0.35		98.9	165.9	163.0	66.2	165.2	87	63	63	62		1.001	2.955	293
718	114.446	115.410		0.16	0.16	1.33	1.07	0.24	75	74	62	1.90	1.40	65	0.014	99	100	79.9	0.22	0.32		98.9	165.8	162.8	66.0	164.9	86	63	63	62		1.001	2.635	261
719	114.605	115.571		0.16	0.16	1.33	1.06	0.24	75	74	62	1.90	1.40	65	0.016	93	93	79.9	0.01	0.34		99.3	165.6	162.6	65.4	164.7	86	63	63	62		1.001	2.795	278
720	114.764	115.731		0.16	0.16	1.33	1.06	0.24	75	74	62	1.90	1.40	65	0.013	103	103	79.9	-0.06	0.34		98.9	165.5	162.4	65.7	164.6	85	63	63	62		1.001	2.796	277
721	114.924	115.892		0.16	0.16	1.34	1.06	0.24	75	74	62	1.90	1.40	64	0.014	100	100	79.9	0.02	0.32		98.6	165.3	162.3	65.8	164.4	85	63	63	62		1.001	2.638	260
722	115.084	116.053		0.16	0.16	1.33	1.06	0.24	75	74	62	1.89	1.40	64	0.013	103	104	80.1	-0.16	0.32		98.7	165.2	162.2	65.5	164.2	85	63	63	62		1.001	2.637	261
723	115.244	116.214		0.16	0.16	1.33	1.06	0.24	75	74	62	1.89	1.40	64	0.011	112	113	80.0	0.09	0.37		98.5	165.0	162.0	65.7	164.2	84	63	63	62		1.001	3.116	307
724	115.403	116.374		0.16	0.16	1.32	1.07	0.24	75	74	62	1.89	1.40	64	0.013	103	103	79.9	0.12	0.36		98.3	164.9	161.9	65.6	164.0	84	63	63	62		1.001	2.956	291
725	115.562	116.535		0.16	0.16	1.32	1.05	0.24	75	74	62	1.90	1.40	67	0.014	99	100	79.9	0.00	0.36		98.5	164.7	161.7	65.4	163.9	116	63	63	62		1.001	2.958	292
726	115.721	116.696		0.16	0.16	1.33	1.06	0.24	75	74	61	1.89	1.40	69	0.013	103	104	80.0	-0.07	0.30		98.3	164.6	161.6	65.4	163.8	128	63	63	61		1.001	2.479	244
727	115.880	116.856		0.16	0.16	1.33	1.06	0.24	75	74	61	1.90	1.40	69	0.014	100	100	79.8	0.18	0.34		98.1	164.4	161.5	65.6	163.7	139	63	63	61		1.001	2.801	275
728	116.039	117.017		0.16	0.16	1.33	1.07	0.24	75	74	61	1.90	1.40	69	0.015	96	97	79.8	-0.02	0.36		98.1	164.3	161.3	65.3	163.5	144	63	63	61		1.001	2.959	291
729	116.199	117.178		0.16	0.16	1.33	1.07	0.24	75	74	61	1.88	1.40	66	0.013	104	104	79.9	-0.08	0.34		98.3	164.1	161.2	65.0	163.3	134	63	63	61		1.001	2.802	276
730	116.358	117.339		0.16	0.16	1.33	1.07	0.24	75	74	61	1.89	1.40	65	0.014	99	100	79.7	0.18	0.34		98.3	164.0	161.0	64.9	163.2	119	63	63	61		1.001	2.806	276
731	116.518	117.499		0.16	0.16	1.34	1.06	0.24	75	74	61	1.89	1.40	64	0.016	93	93	79.8	-0.06	0.34		98.1	163.8	160.9	64.9	162.9	111	62	63	61		1.001	2.802	275
732	116.678	117.661		0.16	0.16	1.33	1.07	0.24	75	74	61	1.90	1.40	64	0.012	108	108	79.8	-0.04	0.34		97.7	163.7	160.7	65.2	162.9	105	62	63	61		1.001	2.798	274
733	116.837	117.821		0.16	0.16	1.33	1.06	0.24	75	74	61	1.88	1.40	64	0.014	99	99	79.8	0.05	0.35		97.8	163.5	160.6	64.9	162.7	101	62	63	61		1.001	2.955	289
734	116.997	117.981		0.16	0.16	1.33	1.07	0.24	75	74	61	1.89	1.30	64	0.013	103	103	79.8	-0.01	0.30		97.8	163.4	160.5	64.8	162.6	99	62	63	61		1.001	2.486	243

Elapsed Time	Particulate Sampling Data																	Fuel Weight, lb		Flow, gpm		Temperature Data, oF													
	Gas Meter Cubic Feet (1)	Gas Meter Cubic Feet (2)	Gas Meter Cubic Feet (amb)	Sample Rate, cfm (1)	Sample Rate, cfm (2)	Orifice dH (1)	Orifice dH (2)	Orifice dH (amb)	Meter oF (1)	Meter oF (2)	Meter oF (amb)	Meter Vac. in. Hg. (1)	Meter Vac. in. Hg. (2)	Dilution Tunnel Temp.	Dilution Tunnel dP	Pro. Rate (%) (1)	Pro. Rate (%) (2)	Scale Reading	Weight Change	Load Side Liquid Flow Rate	Boiler Side Liquid Flow Rate (optional)	Thermopile ΔT	Boiler to Heat Exch. Temp.	Heat Exch to Boiler Temp.	Inlet Load Temp.	Outlet Load Temp.	Stack	Filter (1)	Filter (2)	Ambient		Specific Heat of Inlet Water (BTU/lb-°F)	Mass Flow Rate of Inlet Water (lb/min)	Heat Output, Btu
735	117.156	118.143		0.16	0.16	1.32	1.07	0.24	75	74	62	1.90	1.30	64	0.013	103	104	79.8	0.00	0.34		97.7	163.3	160.3	64.8	162.4	98	62	62	62		1.001	2.806	274
736	117.315	118.304		0.16	0.16	1.33	1.06	0.24	75	74	62	1.90	1.30	64	0.014	99	100	79.7	0.08	0.36		97.4	163.1	160.1	64.9	162.3	96	62	63	62		1.001	2.967	289
737	117.474	118.464		0.16	0.16	1.33	1.06	0.24	75	74	62	1.90	1.40	64	0.014	99	99	79.7	0.00	0.31		97.4	163.0	160.0	64.9	162.2	95	62	62	62		1.001	2.543	248
738	117.634	118.624		0.16	0.16	1.33	1.07	0.24	75	74	62	1.90	1.30	65	0.014	100	99	79.6	0.07	0.30		97.4	162.8	159.9	64.6	162.1	94	62	63	62		1.001	2.483	242
739	117.793	118.786		0.16	0.16	1.34	1.07	0.24	75	74	62	1.89	1.40	65	0.014	99	101	79.8	-0.16	0.34		96.9	162.7	159.8	64.9	161.8	93	62	63	62		1.001	2.800	272
740	117.952	118.946		0.16	0.16	1.33	1.06	0.24	75	74	62	1.88	1.40	65	0.014	99	99	79.7	0.07	0.30		96.5	162.5	159.6	65.2	161.7	92	62	63	62		1.001	2.498	241
741	118.112	119.107		0.16	0.16	1.33	1.06	0.24	75	74	62	1.89	1.40	69	0.014	100	100	79.6	0.07	0.30		96.7	162.4	159.5	64.9	161.6	120	63	63	62		1.001	2.484	240
742	118.271	119.268		0.16	0.16	1.33	1.06	0.24	75	74	62	1.90	1.40	71	0.015	96	97	79.6	0.08	0.32		96.5	162.2	159.3	64.8	161.3	141	63	63	62		1.001	2.638	255
743	118.431	119.428		0.16	0.16	1.33	1.06	0.24	75	74	62	1.90	1.40	72	0.012	108	108	79.5	0.07	0.36		96.4	162.1	159.2	64.8	161.2	152	63	63	62		1.001	2.961	286
744	118.590	119.588		0.16	0.16	1.33	1.06	0.24	75	74	63	1.91	1.40	73	0.014	100	100	79.3	0.17	0.36		95.8	162.0	159.1	65.2	161.0	160	63	64	63		1.001	2.956	284
745	118.750	119.749		0.16	0.16	1.33	1.06	0.24	75	74	62	1.89	1.40	74	0.014	101	101	79.1	0.27	0.34		95.9	161.9	159.0	65.1	161.0	168	63	64	62		1.001	2.799	269
746	118.909	119.910		0.16	0.16	1.32	1.06	0.24	75	74	62	1.89	1.40	75	0.014	100	101	79.0	0.02	0.37		95.6	162.0	159.0	65.4	161.0	176	64	64	62		1.001	3.118	298
747	119.067	120.070		0.16	0.16	1.32	1.06	0.24	75	74	63	1.90	1.40	79	0.014	100	101	78.7	0.30	0.32		95.7	161.9	159.0	65.3	161.0	189	64	64	63		1.001	2.640	253
748	119.227	120.230		0.16	0.16	1.33	1.06	0.24	75	74	63	1.89	1.40	80	0.013	105	104	78.5	0.21	0.30		95.4	162.0	159.1	65.5	160.9	201	64	64	63		1.001	2.481	237
749	119.385	120.391		0.16	0.16	1.33	1.06	0.24	75	74	63	1.91	1.40	81	0.015	97	98	78.2	0.36	0.30		95.6	162.2	159.2	65.5	161.2	211	64	65	63		1.001	2.475	237
750	119.545	120.550		0.16	0.16	1.33	1.06	0.24	75	74	63	1.91	1.40	82	0.014	101	100	78.0	0.15	0.39		95.5	162.3	158.7	65.7	161.2	220	65	65	63		1.001	3.280	314
751	119.704	120.710		0.16	0.16	1.33	1.06	0.24	75	74	63	1.91	1.40	83	0.014	101	101	77.6	0.44	0.39		96.0	162.5	158.8	65.5	161.5	229	65	65	63		1.001	3.280	315
752	119.863	120.871		0.16	0.16	1.34	1.06	0.24	75	74	62	1.91	1.40	85	0.013	105	106	77.2	0.39	0.45		96.5	162.9	159.1	65.3	161.9	237	65	65	62		1.001	3.758	363
753	120.023	121.031		0.16	0.16	1.33	1.06	0.24	75	74	62	1.90	1.40	86	0.015	98	98	77.0	0.22	0.41		97.1	163.3	159.5	65.1	162.2	247	65	66	62		1.001	3.439	334
754	120.181	121.190		0.16	0.16	1.32	1.06	0.24	75	74	62	1.92	1.40	87	0.016	94	94	76.6	0.38	0.43		97.5	163.8	160.0	65.2	162.7	257	66	66	62		1.001	3.595	351
755	120.340	121.351		0.16	0.16	1.33	1.06	0.24	75	74	62	1.91	1.40	88	0.015	98	99	76.2	0.35	0.41		98.0	164.3	160.4	65.1	163.1	270	66	66	62		1.001	3.438	337
756	120.499	121.511		0.16	0.16	1.33	1.06	0.24	75	74	62	1.92	1.40	89	0.014	101	102	75.7	0.49	0.41		98.6	165.1	161.1	65.1	163.7	280	66	66	62		1.001	3.436	339
757	120.658	121.670		0.16	0.16	1.33	1.06	0.24	75	74	62	1.91	1.40	90	0.013	105	105	75.4	0.38	0.43		99.4	166.0	162.0	65.1	164.6	289	66	67	62		1.001	3.563	357
758	120.816	121.831		0.16	0.16	1.33	1.06	0.24	75	74	62	1.92	1.40	91	0.014	101	102	74.9	0.42	0.39		100.4	166.9	163.0	65.3	165.6	297	66	67	62		1.001	3.278	329
759	120.975	121.990		0.16	0.16	1.33	1.06	0.24	75	74	62	1.92	1.40	93	0.014	102	101	74.4	0.55	0.40		101.1	167.9	163.8	65.3	166.4	305	66	67	62		1.001	3.325	336
760	121.134	122.150		0.16	0.16	1.33	1.06	0.24	75	74	62	1.92	1.40	94	0.012	110	110	73.6	0.60	0.43		101.8	168.8	164.7	65.5	167.3	312	67	67	62		1.001	3.598	367
761	121.293	122.310		0.16	0.16	1.33	1.05	0.24	75	74	62	1.92	1.40	95	0.014	102	102	73.6	0.19	0.41		102.6	169.8	165.6	65.6	168.2	318	67	68	62		1.001	3.432	353
762	121.452	122.469		0.16	0.16	1.33	1.06	0.24	75	74	62	1.93	1.40	95	0.015	98	98	73.0	0.55	0.41		103.8	170.9	166.6	65.6	169.4	323	67	68	62		1.001	3.434	357
763	121.611	122.628		0.16	0.16	1.32	1.06	0.24	75	74	62	1.93	1.40	95	0.015	98	98	72.3	0.75	0.37		104.3	171.9	167.7	66.1	170.4	324	67	68	62		1.001	3.113	325
764	121.769	122.788		0.16	0.16	1.32	1.05	0.24	75	74	62	1.93	1.40	95	0.014	101	102	72.0	0.28	0.41		105.3	173.1	168.8	66.1	171.4	325	67	68	62		1.001	3.434	362
765	121.927	122.947		0.16	0.16	1.32	1.05	0.24	75	74	61	1.92	1.40	95	0.015	98	98	71.5	0.49	0.41		106.7	174.2	169.8	66.0	172.7	327	67	68	61		1.001	3.434	367
766	122.085	123.107		0.16	0.16	1.33	1.06	0.24	75	74	61	1.92	1.40	95	0.016	95	95	70.9	0.66	0.41		107.9	175.4	171.0	65.9	173.8	328	67	68	61		1.001	3.434	371
767	122.244	123.266		0.16	0.16	1.33	1.05	0.24	75	74	61	1.92	1.40	96	0.013	106	105	70.5	0.36	0.37		109.0	176.4	172.0	65.8	174.8	330	67	68	61		1.001	3.113	340
768	122.403	123.425		0.16	0.16	1.33	1.05	0.24	75	74	61	1.93	1.40	96	0.015	99	98	70.3	0.24	0.39		110.1	177.5	173.0	65.9	176.0	331	68	69	61		1.001	3.274	361
769	122.562	123.585		0.16	0.16	1.32	1.05	0.24	75	74	61	1.94	1.40	96	0.013	106	106	69.5	0.75	0.39		111.1	178.6	174.1	65.9	177.0	334	68	69	61		1.001	3.273	364
770	122.720	123.743		0.16	0.16	1.32	1.05	0.24	75	74	61	1.94	1.40	97	0.014	101	101	69.3	0.18	0.43		112.2	179.7	175.2	65.9	178.1	336	68	69	61		1.001	3.595	404
771	122.878	123.902		0.16	0.16	1.31	1.05	0.24	75	74	61	1.94	1.40	97	0.013	105	105	68.8	0.50	0.43		113.4	180.8	176.2	66.0	179.4	338	68	69	61		1.001	3.596	408
772	123.036	124.062		0.16	0.16	1.32	1.05	0.24	75	74	62	1.93	1.40	97	0.015	98	99	68.3	0.51	0.41		114.2	182.0	177.3	66.2	180.4	339	68	69	62		1.001	3.440	393
773	123.194	124.220		0.16	0.16	1.32	1.05	0.24	75	74	62	1.92	1.40	97	0.013	105	105	67.8	0.49	0.43		115.2	183.1	178.5	66.3	181.5	340	68	69	62		1.001	3.596	415
774	123.353	124.379		0.16	0.16	1.32	1.05	0.24	75	74	62	1.93	1.40	81	0.015	97	97	67.7	0.15	0.39		116.3	184.1	179.5	66.3	182.6	315	67	68	62		1.001	3.272	381
775	123.511	124.539		0.16	0.16	1.33	1.05	0.24	75	74	62	1.91	1.40	78	0.013	104	104	67.3	0.38	0.41		117.0	184.8	180.1	66.4	183.4	291	67	67	62		1.001	3.431	402
776	123.671	124.698		0.16	0.16	1.32	1.05	0.24	75	74	62	1.92	1.40	74	0.014	101	100	67.2	0.10	0.43		117.5	185.3	180.6	66.5	184.0	275	66	67	62		1.001	3.597	423
777	123.829	124.857		0.16	0.16	1.32	1.05	0.24	74	74	62	1.91	1.40	73	0.013	103	103	67.2	-0.01	0.43		117.5	185.7	181.0	66.8	184.3	263	66	66	62		1.001	3.595	423
778	123.988	125.017		0.16	0.16	1.32	1.05	0.24	75	74	62	1.91	1.40	72	0.014	100	100	67.0	0.22	0.41		117.7	185.9	181.2	67.0	184.7	254	66	66	62		1.001	3.435	405
779	124.147	125.176		0.16	0.16	1.31	1.05	0.24	75	74	62	1.92	1.40	72	0.013	104	103	66.8	0.25	0.39		117.5	186.1	181.4	67.1	184.6	245	66	66	62		1.001	3.273	385
780	124.305	125.336		0.16	0.16	1.32	1.05	0.24	75	74	62	1.92	1.40	71	0.010	117	118	66.8	-0.09	0.41		117.7	186.2	181.6	67.2	184.9	238	66	66	62		1.001	3.431	404
781	124.464	125.496		0.16	0.16	1.32	1.05	0.24	75	74	62	1.91	1.40	71	0.015	96	96	66.9	-0.03	0.41		117.8	186.3	181.6	67.3	185.1	231	65	66	62		1.001	3.435	405
782	124.623	125.655		0.16	0.16	1.32	1.05	0.24	75	74	63	1.92	1.40	71	0.014	100	99	66.9	-0.04	0.41		117.8	186.4	181.8	67.5	185.3	225	65	66	63		1.001	3.428	404
783	124.781	125.816		0.16	0.16	1.33	1.06	0.24	75	74	63	1.91	1.40	71	0.015	96	97	66.9	0.04	0.41		117.4	186.4	181.7	67.7	185.1	220	65	66	63		1.001	3.437	404
784	124.941	125.976		0.16	0.16	1.32	1.04	0.24	75	74	63	1.92	1.40	70	0.013	104	104	66.7	0.17	0.39		117.6	186.5	181.8	67.6	185.2	215	65	66	63		1.001	3.265	384
785	125.100	126.135		0.16	0.16	1.32	1.06	0.24	75	74	63	1.91	1.40	70	0.015	96	96	66.7	-0.02	0.41		117.6	186.4	181.7	67.6	185.2	211	65	66	63		1.001	3.434	404
786	125.259	126.296		0.16	0.16	1.32	1.06	0.24	75	74	63	1.91	1.40	69	0.015	96	97	66.5	0.18	0.43		118.0	186.4	181.8	67.4	185.3	208	65	66	63		1.001	3.615	427
787	125.418	126.456		0.16	0.16	1.32	1.05	0.24	75	74	63	1.90	1.40	69	0.013	103	103	66.7	-0.13	0.41		117.9	186.5	181.8	67.4	185.3	204	65	66	63		1.001	3.418	403
788	125.577	126.616		0.16	0.16	1.33	1.05	0.24	75	74	62	1.90	1.40	68	0.013	103	103	66.6	0.03	0.41		117.6	186.4	181.7	67.7	185.3	200	65	66	62		1.001	3.433	404
789	125.735	126.776		0.16	0.16	1.32	1.06	0.24	75	74	63	1.92	1.40	68	0.014	99	100	66.7	-0.02	0.39		117.7	186.5	181.8	67.6	185.3	196	65	65	63		1.001	3.274	386
790	125.894	126.936		0.16	0.16	1.32	1.05	0.24	75	74	63	1.92	1.40	68	0.013	103	103	66.7	-0.05	0.37		117.6	186.3	181.7	67.8	185.4	192	65	65	63		1.001	3.116	367
791	126.053	127.096		0.16	0.16	1.33	1.06	0.24	75	74	63	1.91	1.40	68	0.015	96	96	66.8	-0.05	0.43		117.1	186.3	181.6	68.0	185.1	188	65	65	63		1.001	3.594	421
792	126.212	127.256		0.16	0.16	1.32	1.06	0.24	75	74	64	1.91	1.40	70	0.015	96	96	66.6	0.12	0.41		117.1	186.3	181.6	67.9	185.0	185	65	65	64		1.001	3.434	403
793	126.371	127.416		0.16	0.16	1.32	1.05	0.24	75	74	63	1.92	1.40	69	0.015	96	96	66.8	-0.13	0.39		117.1	186.1	181.5	68.0	185.0	181	65	65	63		1.001	3.272	384
794	126.531	127.576		0.16	0.16	1.32	1.05	0.24	75	74	63	1.91	1.40	68	0.014	100	100	66.8	0.03	0.41		117.0	186.0	181.4	67.8	184.8	178	65	65	63		1.001	3.435	402
795	126.689	127.736		0.16	0.16	1.31	1.06	0.24	75	74	63	1.92	1.40	68	0.013	103	103	66.7	0.02	0.45		117.3	185.9	181.3	67.6	184.9	175	65	65	63		1.001	3.755	441
796	126.848	127.896		0.16	0.16	1.32	1.05	0.24	75	74	63	1.92	1.40	68	0.014	99	100	66.5	0.21	0.43		117.2	185.8	181.2	67.4	184.7	171	65	65	63		1.001	3.586	421

Elapsed Time	Particulate Sampling Data																	Fuel Weight, lb		Flow, gpm		Temperature Data, oF												
	Gas Meter Cubic Feet (1)	Gas Meter Cubic Feet (2)	Gas Meter Cubic Feet (amb)	Sample Rate, cfm (1)	Sample Rate, cfm (2)	Orifice dH (1)	Orifice dH (2)	Orifice dH (amb)	Meter oF (1)	Meter oF (2)	Meter oF (amb)	Meter Vac. in. Hg. (1)	Meter Vac. in. Hg. (2)	Dilution Tunnel Temp.	Dilution Tunnel dP	Pro. Rate (%) (1)	Pro. Rate (%) (2)	Scale Reading	Weight Change	Load Side Liquid Flow Rate	Boiler Side Liquid Flow Rate (optional)	Thermopile ΔT	Boiler to Heat Exch. Temp.	Heat Exch to Boiler Temp.	Inlet Load Temp.	Outlet Load Temp.	Stack	Filter (1)	Filter (2)	Ambient		Specific Heat of Inlet Water (BTU/lb-°F)	Mass Flow Rate of Inlet Water (lb/min)	Heat Output, Btu
797	127.007	128.056		0.16	0.16	1.32	1.05	0.24	75	74	63	1.91	1.40	67	0.014	99	99	66.7	-0.20	0.43		117.3	185.8	181.2	67.4	184.7	168	65	65	63		1.001	3.591	422
798	127.165	128.216		0.16	0.16	1.32	1.06	0.24	75	74	63	1.92	1.40	67	0.014	99	99	66.6	0.07	0.37		117.3	185.8	181.1	67.3	184.7	166	65	65	63		1.001	3.111	365
799	127.324	128.376		0.16	0.16	1.32	1.05	0.24	75	74	63	1.91	1.40	67	0.013	103	103	66.7	-0.02	0.41		117.2	185.6	181.0	67.2	184.5	163	65	65	63		1.001	3.438	404
800	127.483	128.536		0.16	0.16	1.32	1.05	0.24	75	74	62	1.92	1.40	67	0.013	103	103	66.6	0.03	0.41		117.3	185.6	181.0	67.1	184.4	160	64	65	62		1.001	3.430	403
801	127.642	128.696		0.16	0.16	1.32	1.06	0.24	75	74	62	1.91	1.40	66	0.015	96	96	66.8	-0.17	0.39		117.6	185.4	180.7	66.7	184.3	158	64	65	62		1.001	3.272	385
802	127.802	128.857		0.16	0.16	1.32	1.06	0.24	75	74	62	1.92	1.40	66	0.015	96	97	66.7	0.07	0.41		117.7	185.4	180.7	66.6	184.2	155	64	65	62		1.001	3.432	404
803	127.961	129.016		0.16	0.16	1.32	1.06	0.24	75	74	62	1.90	1.40	66	0.014	99	99	66.7	0.07	0.43		117.4	185.3	180.7	66.6	184.1	153	64	64	62		1.001	3.590	422
804	128.119	129.176		0.16	0.16	1.32	1.06	0.24	75	74	62	1.90	1.40	66	0.014	99	99	66.7	0.00	0.43		118.0	185.1	180.5	66.1	184.1	151	64	64	62		1.001	3.589	424
805	128.278	129.337		0.16	0.16	1.32	1.06	0.24	75	74	62	1.92	1.40	66	0.014	99	100	66.7	-0.05	0.41		117.9	184.9	180.2	65.9	183.8	148	64	64	62		1.001	3.432	405
806	128.437	129.497		0.16	0.16	1.32	1.05	0.24	75	74	62	1.90	1.40	66	0.014	99	99	66.7	-0.02	0.45		117.9	184.7	180.1	65.8	183.7	146	64	64	62		1.001	3.754	443
807	128.596	129.657		0.16	0.16	1.33	1.06	0.24	75	74	62	1.90	1.40	65	0.012	107	107	66.7	0.05	0.41		117.9	184.7	180.0	65.7	183.6	145	64	64	62		1.001	3.437	406
808	128.755	129.818		0.16	0.16	1.32	1.06	0.24	75	74	61	1.91	1.40	65	0.015	96	97	66.8	-0.12	0.41		118.2	184.6	180.0	65.4	183.6	143	64	64	61		1.001	3.436	407
809	128.914	129.978		0.16	0.16	1.33	1.06	0.24	75	74	62	1.90	1.40	65	0.014	99	99	66.7	0.13	0.41		118.2	184.5	179.9	65.1	183.3	140	63	64	62		1.001	3.441	407
810	129.073	130.138		0.16	0.16	1.33	1.06	0.24	75	74	62	1.90	1.40	65	0.014	99	99	66.7	0.00	0.45		118.0	184.4	179.8	65.3	183.2	138	63	64	62		1.001	3.748	443
811	129.233	130.299		0.16	0.16	1.33	1.05	0.24	75	74	61	1.90	1.40	65	0.013	104	104	66.6	0.13	0.38		117.8	184.2	179.6	65.3	183.1	137	63	64	61		1.001	3.194	377
812	129.392	130.459		0.16	0.16	1.33	1.06	0.24	75	74	61	1.90	1.40	65	0.013	103	103	66.7	-0.15	0.40		117.3	184.1	179.5	65.6	182.9	135	63	63	61		1.001	3.343	393
813	129.551	130.619		0.16	0.16	1.32	1.06	0.24	75	74	61	1.91	1.40	65	0.014	99	99	66.7	0.03	0.41		117.4	183.9	179.2	65.4	182.8	134	63	63	61		1.001	3.437	404
814	129.710	130.780		0.16	0.16	1.32	1.06	0.24	75	74	61	1.91	1.40	64	0.013	103	104	66.6	0.03	0.40		117.5	183.7	179.0	65.1	182.6	132	63	63	61		1.001	3.362	395
815	129.868	130.940		0.16	0.16	1.33	1.06	0.24	75	74	61	1.92	1.40	65	0.015	95	96	66.5	0.12	0.41		117.3	183.7	179.0	65.2	182.5	130	63	63	61		1.001	3.439	404
816	130.027	131.099		0.16	0.16	1.32	1.05	0.24	75	74	61	1.93	1.40	76	0.014	100	100	66.4	0.15	0.40		117.2	183.4	178.8	65.1	182.3	157	64	64	61		1.001	3.343	392
817	130.186	131.259		0.16	0.16	1.33	1.05	0.24	75	74	61	1.91	1.40	72	0.013	104	104	66.3	0.12	0.41		117.0	183.2	178.5	65.0	182.1	185	63	64	61		1.001	3.452	404
818	130.345	131.420		0.16	0.16	1.33	1.05	0.24	75	74	61	1.89	1.40	66	0.013	103	104	66.3	-0.10	0.43		116.8	183.0	178.4	65.1	181.9	166	63	63	61		1.001	3.598	421
819	130.504	131.580		0.16	0.16	1.33	1.06	0.24	75	74	61	1.89	1.40	65	0.014	99	99	66.4	-0.03	0.39		116.9	182.9	178.4	64.9	181.8	154	63	63	61		1.001	3.280	384
820	130.664	131.740		0.16	0.16	1.32	1.06	0.24	75	74	61	1.90	1.40	65	0.014	100	99	66.4	0.00	0.43		116.8	182.8	178.3	64.9	181.7	146	63	63	61		1.001	3.600	421
821	130.823	131.901		0.16	0.16	1.32	1.05	0.24	75	74	61	1.90	1.40	65	0.013	103	104	66.2	0.16	0.41		116.6	182.6	178.0	65.0	181.5	141	63	63	61		1.001	3.438	401
822	130.982	132.061		0.16	0.16	1.32	1.06	0.24	75	74	61	1.91	1.40	65	0.014	99	99	66.3	-0.05	0.39		116.5	182.5	177.9	64.9	181.4	137	63	63	61		1.001	3.279	382
823	131.141	132.222		0.16	0.16	1.32	1.06	0.24	75	74	61	1.91	1.40	65	0.014	99	100	66.3	-0.02	0.43		116.4	182.3	177.8	64.9	181.3	134	63	63	61		1.001	3.598	419
824	131.300	132.383		0.16	0.16	1.32	1.06	0.24	75	74	62	1.90	1.40	65	0.013	103	104	66.3	0.03	0.36		116.0	182.1	177.5	65.0	181.0	132	63	63	62		1.001	2.959	344
825	131.459	132.543		0.16	0.16	1.33	1.06	0.24	75	74	62	1.89	1.40	65	0.014	99	99	66.2	0.05	0.41		115.6	182.0	177.5	65.4	180.9	130	63	63	62		1.001	3.441	398
826	131.618	132.703		0.16	0.16	1.33	1.06	0.24	74	74	62	1.91	1.40	65	0.014	99	99	66.3	-0.06	0.39		115.4	181.9	177.4	65.3	180.8	128	63	63	62		1.001	3.280	379
827	131.777	132.864		0.16	0.16	1.32	1.06	0.24	75	74	62	1.90	1.40	66	0.014	99	100	66.2	0.04	0.41		115.3	181.7	177.2	65.3	180.6	126	63	63	62		1.001	3.441	397
828	131.936	133.024		0.16	0.16	1.33	1.06	0.24	74	74	62	1.91	1.40	66	0.015	96	96	66.1	0.12	0.43		115.0	181.6	177.1	65.5	180.5	125	63	63	62		1.001	3.598	414
829	132.095	133.184		0.16	0.16	1.33	1.06	0.24	75	74	63	1.91	1.40	68	0.015	96	96	66.4	-0.28	0.41		114.6	181.4	176.9	65.8	180.4	123	63	63	63		1.001	3.432	394
830	132.255	133.345		0.16	0.16	1.33	1.05	0.24	74	74	62	1.90	1.40	66	0.014	100	100	66.2	0.20	0.39		114.4	181.2	176.8	65.8	180.2	122	63	63	62		1.001	3.281	376
831	132.414	133.505		0.16	0.16	1.32	1.05	0.24	75	74	62	1.91	1.40	66	0.015	96	96	66.2	-0.02	0.45		114.2	181.1	176.7	65.9	180.2	121	63	63	62		1.001	3.758	430
832	132.573	133.665		0.16	0.16	1.32	1.06	0.24	74	74	62	1.91	1.40	66	0.015	96	96	66.3	-0.13	0.39		114.0	181.0	176.7	65.9	180.0	119	63	63	62		1.001	3.276	374
833	132.732	133.826		0.16	0.16	1.32	1.06	0.24	75	74	62	1.91	1.40	66	0.012	107	108	66.2	0.18	0.45		114.1	180.8	176.4	65.6	179.8	118	63	63	62		1.001	3.761	430
834	132.891	133.986		0.16	0.16	1.33	1.05	0.24	75	74	62	1.89	1.40	66	0.014	99	99	66.3	-0.13	0.39		114.0	180.6	176.2	65.4	179.5	117	63	63	62		1.001	3.278	374
835	133.050	134.146		0.16	0.16	1.32	1.06	0.24	75	74	62	1.91	1.40	65	0.014	99	99	66.4	-0.10	0.39		114.3	180.4	176.0	65.0	179.4	116	63	63	62		1.001	3.276	375
836	133.209	134.306		0.16	0.16	1.33	1.06	0.24	74	74	62	1.90	1.40	65	0.014	99	99	66.3	0.13	0.41		114.2	180.2	175.8	65.1	179.3	115	63	63	62		1.001	3.435	393
837	133.368	134.467		0.16	0.16	1.33	1.06	0.24	75	74	62	1.91	1.40	65	0.012	107	108	66.3	-0.01	0.43		114.2	180.0	175.6	64.7	179.0	115	63	63	62		1.001	3.597	411
838	133.527	134.627		0.16	0.16	1.33	1.05	0.24	75	74	62	1.91	1.40	65	0.013	103	103	66.2	0.06	0.41		114.1	179.9	175.5	64.8	178.9	113	63	63	62		1.001	3.434	392
839	133.687	134.787		0.16	0.16	1.33	1.06	0.24	75	74	62	1.90	1.40	65	0.014	100	99	66.1	0.05	0.43		113.9	179.8	175.4	64.9	178.8	112	63	63	62		1.001	3.594	410
840	133.846	134.948		0.16	0.16	1.33	1.06	0.24	74	74	61	1.91	1.40	65	0.013	103	104	66.3	-0.14	0.39		113.6	179.5	175.1	65.0	178.6	111	63	63	61		1.001	3.274	372
841	134.005	135.108		0.16	0.16	1.32	1.06	0.24	75	74	61	1.90	1.40	64	0.013	103	103	66.1	0.14	0.41		113.4	179.4	174.9	64.9	178.4	111	63	63	61		1.001	3.393	385
842	134.164	135.269		0.16	0.16	1.31	1.06	0.24	74	74	61	1.91	1.40	64	0.014	99	100	66.3	-0.17	0.41		113.3	179.2	174.8	65.0	178.3	110	62	63	61		1.001	3.438	390
843	134.323	135.430		0.16	0.16	1.33	1.06	0.24	74	74	61	1.91	1.40	64	0.012	107	108	66.4	-0.05	0.40		113.1	179.1	174.6	65.0	178.1	109	62	63	61		1.001	3.290	372
844	134.482	135.590		0.16	0.16	1.33	1.06	0.24	74	73	61	1.90	1.40	65	0.013	103	103	66.4	0.01	0.41		112.9	178.9	174.4	65.0	177.9	109	62	63	61		1.001	3.437	388
845	134.641	135.750		0.16	0.16	1.33	1.06	0.24	74	73	61	1.91	1.40	64	0.014	99	99	66.3	0.06	0.39		112.8	178.7	174.3	64.8	177.6	108	62	63	61		1.001	3.259	368
846	134.800	135.911		0.16	0.16	1.33	1.06	0.24	74	73	61	1.91	1.40	64	0.013	103	104	66.3	-0.01	0.42		113.0	178.5	174.1	64.6	177.5	107	62	62	61		1.001	3.457	391
847	134.959	136.072		0.16	0.16	1.33	1.05	0.24	74	73	61	1.91	1.40	67	0.013	103	104	66.3	0.02	0.43		112.8	178.4	174.0	64.5	177.4	106	63	63	61		1.001	3.600	407
848	135.119	136.231		0.16	0.16	1.32	1.05	0.24	74	73	61	1.90	1.40	71	0.013	104	103	66.2	0.10	0.39		112.6	178.1	173.8	64.6	177.2	144	63	63	61		1.001	3.276	369
849	135.278	136.392		0.16	0.16	1.32	1.06	0.24	74	73	61	1.90	1.40	66	0.013	103	104	66.1	0.08	0.43		112.1	177.9	173.5	64.7	176.9	148	62	62	61		1.001	3.601	404
850	135.437	136.552		0.16	0.16	1.33	1.06	0.24	74	73	61	1.89	1.40	65	0.015	96	96	66.1	0.05	0.43		111.6	177.8	173.3	64.9	176.6	134	62	62	61		1.001	3.603	403
851	135.596	136.712		0.16	0.16	1.32	1.05	0.24	74	73	61	1.90	1.40	64	0.014	99	99	66.0	0.02	0.37		111.5	177.6	173.2	65.0	176.5	126	62	62	61		1.001	3.120	348
852	135.755	136.873		0.16	0.16	1.32	1.06	0.24	74	73	61	1.91	1.40	64	0.015	96	97	66.2	-0.19	0.39		111.4	177.4	173.1	65.0	176.4	120	62	62	61		1.001	3.278	366
853	135.914	137.034		0.16	0.16	1.32	1.06	0.24	74	73	62	1.91	1.40	64	0.012	107	108	66.1	0.16	0.43		111.0	177.2	172.9	65.3	176.3	116	62	62	62		1.001	3.598	400
854	136.073	137.193		0.16	0.16	1.33	1.06	0.24	74	73	62	1.90	1.40	65	0.013	103	103	66.1	0.00	0.43		110.7	177.1	172.7	65.4	176.1	113	62	62	62		1.001	3.598	399
855	136.232	137.354		0.16	0.16	1.33	1.06	0.24	74	73	62	1.89	1.40	65	0.012	107	108	66.1	0.00	0.39		110.4	177.0	172.6	65.5	175.9	112	62	62	62		1.001	3.276	362
856	136.391	137.515		0.16	0.16	1.33	1.06	0.24	74	73	62	1.90	1.40	65	0.013	103	104	66.1	-0.02	0.39		110.2	176.8	172.5	65.6	175.7	110	62	63	62		1.001	3.278	362
857	136.550	137.675		0.16	0.16	1.33	1.06	0.24	74	73	62	1.91	1.40	65	0.013	103	103	66.0	0.07	0.45		110.0	176.6	172.3	65.6	175.6	108	62	63	62		1.001	3.755	414
858	136.710	137.835		0.16	0.16	1.33	1.06	0.24	74	73	62	1.91	1.40	65	0.014	100	99	66.1	-0.09	0.37		109.9	176.3	172.1	65.5	175.4	107	62	63	62		1.001	3.112	342

Elapsed Time	Particulate Sampling Data																	Fuel Weight, lb		Flow, gpm		Temperature Data, oF												
	Gas Meter Cubic Feet (1)	Gas Meter Cubic Feet (2)	Gas Meter Cubic Feet (amb)	Sample Rate, cfm (1)	Sample Rate, cfm (2)	Orifice dH (1)	Orifice dH (2)	Orifice dH (amb)	Meter oF (1)	Meter oF (2)	Meter oF (amb)	Meter Vac. in. Hg. (1)	Meter Vac. in. Hg. (2)	Dilution Tunnel Temp.	Dilution Tunnel dP	Pro. Rate (%) (1)	Pro. Rate (%) (2)	Scale Reading	Weight Change	Load Side Liquid Flow Rate	Boiler Side Liquid Flow Rate (optional)	Thermopile ΔT	Boiler to Heat Exch. Temp.	Heat Exch to Boiler Temp.	Inlet Load Temp.	Outlet Load Temp.	Stack	Filter (1)	Filter (2)	Ambient		Specific Heat of Inlet Water (BTU/lb-°F)	Mass Flow Rate of Inlet Water (lb/min)	Heat Output, Btu
859	136.869	137.996		0.16	0.16	1.32	1.06	0.24	74	73	62	1.89	1.40	65	0.014	99	100	66.1	-0.04	0.41		109.8	176.2	171.9	65.4	175.2	106	62	63	62		1.001	3.438	378
860	137.028	138.156		0.16	0.16	1.31	1.05	0.24	74	73	62	1.89	1.40	65	0.012	107	107	66.0	0.12	0.45		109.6	176.1	171.8	65.5	175.2	105	62	63	62		1.001	3.757	412
861	137.187	138.316		0.16	0.16	1.32	1.05	0.24	74	73	62	1.91	1.40	66	0.016	93	93	66.0	-0.02	0.39		109.3	175.9	171.6	65.7	175.0	104	63	63	62		1.001	3.279	359
862	137.345	138.477		0.16	0.16	1.32	1.06	0.24	74	73	63	1.89	1.40	66	0.014	99	100	66.1	-0.01	0.45		108.9	175.6	171.4	65.8	174.7	104	63	63	63		1.001	3.754	409
863	137.504	138.637		0.16	0.16	1.32	1.06	0.24	74	73	63	1.91	1.40	66	0.013	103	103	66.0	0.08	0.43		108.7	175.5	171.2	65.8	174.5	103	63	63	63		1.001	3.600	392
864	137.663	138.797		0.16	0.16	1.32	1.06	0.24	74	73	62	1.90	1.40	66	0.012	107	108	65.9	0.05	0.43		108.5	175.3	171.1	65.8	174.3	102	63	63	62		1.001	3.605	392
865	137.822	138.958		0.16	0.16	1.32	1.06	0.24	74	73	62	1.91	1.40	66	0.015	96	97	66.2	-0.23	0.41		108.2	175.1	170.9	65.9	174.1	102	63	63	62		1.001	3.440	373
866	137.982	139.118		0.16	0.16	1.33	1.05	0.24	74	73	62	1.90	1.40	66	0.014	100	100	65.9	0.22	0.44		108.3	175.0	170.7	65.7	174.0	101	63	63	62		1.001	3.692	400
867	138.141	139.278		0.16	0.16	1.33	1.05	0.24	74	73	62	1.91	1.40	66	0.014	99	100	66.0	-0.06	0.40		108.1	174.8	170.6	65.8	173.9	100	63	63	62		1.001	3.371	365
868	138.300	139.438		0.16	0.16	1.33	1.06	0.24	74	73	62	1.90	1.40	66	0.013	103	103	66.0	-0.01	0.41		108.1	174.6	170.4	65.6	173.7	100	63	63	62		1.001	3.437	372
869	138.459	139.599		0.16	0.16	1.33	1.06	0.24	74	73	62	1.91	1.40	66	0.014	99	100	66.1	-0.05	0.45		107.7	174.4	170.2	65.6	173.4	100	63	63	62		1.001	3.761	406
870	138.618	139.759		0.16	0.16	1.32	1.06	0.24	74	73	62	1.91	1.40	66	0.014	99	100	66.0	0.10	0.43		107.7	174.3	170.1	65.6	173.2	99	63	63	62		1.001	3.606	389
871	138.777	139.919		0.16	0.16	1.32	1.06	0.24	74	73	63	1.90	1.40	66	0.013	103	103	66.0	-0.05	0.45		107.6	174.0	169.9	65.5	173.1	98	63	63	63		1.001	3.760	405
872	138.936	140.080		0.16	0.16	1.33	1.06	0.24	74	74	63	1.91	1.40	66	0.013	103	104	66.1	-0.03	0.39		107.2	173.9	169.7	65.6	172.8	98	63	63	63		1.001	3.281	352
873	139.095	140.240		0.16	0.16	1.33	1.06	0.24	74	74	63	1.91	1.40	66	0.014	99	99	66.1	-0.01	0.37		107.2	173.7	169.6	65.6	172.7	97	63	63	63		1.001	3.111	334
874	139.254	140.400		0.16	0.16	1.33	1.06	0.24	74	74	63	1.90	1.40	66	0.013	103	103	66.1	-0.05	0.39		107.0	173.5	169.3	65.5	172.5	97	63	63	63		1.001	3.273	351
875	139.413	140.561		0.16	0.16	1.33	1.06	0.24	74	74	63	1.91	1.40	67	0.013	103	104	66.1	0.06	0.43		106.9	173.4	169.2	65.5	172.4	96	63	63	63		1.001	3.599	385
876	139.573	140.721		0.16	0.16	1.33	1.06	0.24	74	74	63	1.90	1.40	67	0.015	97	96	66.0	0.03	0.41		106.7	173.1	169.1	65.6	172.3	96	63	63	63		1.001	3.436	367
877	139.732	140.881		0.16	0.16	1.33	1.06	0.24	74	74	63	1.91	1.40	67	0.013	103	103	66.2	-0.14	0.41		106.3	173.0	168.8	65.6	172.0	95	63	63	63		1.001	3.437	366
878	139.891	141.042		0.16	0.16	1.32	1.06	0.24	74	74	63	1.91	1.40	68	0.015	96	97	66.0	0.15	0.45		106.2	172.8	168.7	65.7	171.8	95	63	63	63		1.001	3.761	400
879	140.050	141.201		0.16	0.16	1.31	1.05	0.24	74	74	63	1.91	1.40	71	0.016	93	93	66.1	-0.08	0.41		106.2	172.6	168.5	65.6	171.8	132	64	64	63		1.001	3.440	366
880	140.209	141.361		0.16	0.16	1.32	1.05	0.24	74	74	63	1.91	1.40	71	0.015	97	96	66.2	-0.06	0.39		105.9	172.4	168.3	65.6	171.5	135	63	64	63		1.001	3.277	347
881	140.368	141.522		0.16	0.16	1.33	1.05	0.24	74	74	63	1.90	1.40	67	0.015	96	97	65.9	0.24	0.41		105.6	172.2	168.1	65.7	171.3	128	63	64	63		1.001	3.439	364
882	140.526	141.682		0.16	0.16	1.32	1.05	0.24	75	74	63	1.91	1.40	66	0.013	102	103	66.0	-0.03	0.41		105.5	172.0	167.9	65.6	171.1	120	63	64	63		1.001	3.439	363
883	140.686	141.842		0.16	0.16	1.33	1.06	0.24	75	74	63	1.91	1.40	66	0.014	100	99	65.9	0.07	0.41		105.5	171.8	167.7	65.5	171.0	115	64	64	63		1.001	3.435	363
884	140.844	142.002		0.16	0.16	1.33	1.06	0.24	75	74	63	1.90	1.40	66	0.014	99	99	66.0	-0.08	0.39		105.3	171.7	167.6	65.4	170.7	111	64	64	63		1.001	3.280	346
885	141.004	142.163		0.16	0.16	1.33	1.05	0.24	75	74	62	1.89	1.40	66	0.014	100	100	66.1	-0.11	0.39		105.5	171.6	167.5	65.1	170.5	108	63	64	62		1.001	3.284	347
886	141.164	142.322		0.16	0.16	1.32	1.06	0.24	75	74	62	1.91	1.40	65	0.013	104	102	66.0	0.12	0.43		105.5	171.3	167.2	65.0	170.4	106	63	64	62		1.001	3.596	380
887	141.322	142.483		0.16	0.16	1.33	1.06	0.24	75	74	62	1.92	1.40	65	0.013	102	104	65.9	0.06	0.39		105.5	171.1	167.0	64.8	170.3	103	63	64	62		1.001	3.267	345
888	141.482	142.644		0.16	0.16	1.32	1.06	0.24	75	74	62	1.91	1.40	65	0.013	104	104	65.9	-0.04	0.39		105.4	170.9	166.8	64.6	170.0	102	63	64	62		1.001	3.275	345
889	141.640	142.804		0.16	0.16	1.32	1.06	0.24	75	74	62	1.90	1.40	65	0.014	99	99	65.9	0.02	0.45		105.2	170.7	166.6	64.5	169.7	100	63	63	62		1.001	3.749	395
890	141.800	142.964		0.16	0.16	1.33	1.06	0.24	75	74	62	1.90	1.40	65	0.012	108	107	65.9	-0.01	0.47		105.2	170.6	166.5	64.3	169.6	99	63	63	62		1.001	3.899	411
891	141.959	143.125		0.16	0.16	1.33	1.06	0.24	75	74	62	1.91	1.40	64	0.015	96	96	65.9	0.05	0.41		104.9	170.4	166.3	64.5	169.4	98	63	63	62		1.001	3.424	360
892	142.118	143.285		0.16	0.16	1.33	1.06	0.24	75	74	62	1.90	1.40	64	0.014	99	99	65.9	0.00	0.43		104.9	170.3	166.2	64.5	169.3	98	63	63	62		1.001	3.592	377
893	142.277	143.445		0.16	0.16	1.33	1.06	0.24	75	74	62	1.91	1.40	64	0.014	99	99	65.9	-0.05	0.44		104.6	170.0	165.9	64.5	169.1	97	63	63	62		1.001	3.705	388
894	142.436	143.607		0.16	0.16	1.33	1.06	0.24	75	74	61	1.90	1.40	64	0.012	107	108	65.8	0.17	0.41		104.3	169.8	165.7	64.5	168.8	96	63	63	61		1.001	3.435	359
895	142.596	143.766		0.16	0.16	1.34	1.06	0.24	75	74	61	1.91	1.40	65	0.013	104	102	66.0	-0.20	0.43		104.4	169.6	165.5	64.4	168.7	95	63	63	61		1.001	3.579	374
896	142.755	143.927		0.16	0.16	1.33	1.06	0.24	75	74	61	1.90	1.40	65	0.014	99	100	65.9	0.09	0.37		104.3	169.4	165.4	64.3	168.6	95	63	63	61		1.001	3.117	325
897	142.914	144.088		0.16	0.16	1.32	1.06	0.24	74	74	61	1.91	1.40	64	0.014	99	100	65.9	-0.03	0.39		104.1	169.3	165.3	64.2	168.3	95	63	63	61		1.001	3.281	342
898	143.074	144.248		0.16	0.16	1.32	1.06	0.24	75	74	61	1.90	1.40	64	0.013	103	103	66.0	-0.03	0.43		104.1	169.2	165.2	64.1	168.2	94	62	63	61		1.001	3.618	377
899	143.233	144.408		0.16	0.16	1.32	1.06	0.24	75	74	61	1.91	1.40	64	0.014	99	99	66.0	-0.04	0.45		103.9	168.9	164.9	63.9	167.9	94	62	63	61		1.001	3.763	392
900	143.392	144.569		0.16	0.16	1.33	1.06	0.24	74	74	61	1.91	1.40	64	0.013	103	104	66.0	-0.02	0.41		103.8	168.7	164.7	64.0	167.8	93	62	63	61		1.001	3.451	359
901	143.551	144.730		0.16	0.16	1.33	1.06	0.24	74	74	61	1.92	1.40	64	0.014	99	100	65.8	0.26	0.43		103.5	168.5	164.5	64.0	167.5	93	62	63	61		1.001	3.601	373
902	143.710	144.890		0.16	0.16	1.33	1.06	0.24	74	74	62	1.91	1.40	64	0.014	99	99	65.8	-0.09	0.41		103.2	168.3	164.3	64.3	167.4	93	62	63	62		1.001	3.440	355
903	143.869	145.050		0.16	0.16	1.33	1.06	0.24	74	74	62	1.91	1.40	64	0.012	107	107	65.9	-0.10	0.41		102.8	168.1	164.2	64.4	167.2	92	62	63	62		1.001	3.441	354
904	144.029	145.212		0.16	0.16	1.33	1.06	0.24	74	74	62	1.90	1.40	65	0.014	100	101	65.9	0.09	0.39		102.7	168.0	164.0	64.3	167.1	91	62	63	62		1.001	3.279	337
905	144.188	145.372		0.16	0.16	1.33	1.06	0.24	74	74	62	1.91	1.40	65	0.013	103	103	66.0	-0.19	0.41		102.3	167.8	163.8	64.5	166.8	91	62	63	62		1.001	3.440	352
906	144.348	145.532		0.16	0.16	1.33	1.06	0.24	74	73	62	1.91	1.40	65	0.014	100	99	65.9	0.18	0.39		102.2	167.6	163.7	64.5	166.7	91	62	63	62		1.001	3.279	336
907	144.507	145.694		0.16	0.16	1.33	1.06	0.24	74	74	62	1.90	1.40	65	0.014	99	101	65.9	-0.08	0.43		102.0	167.4	163.5	64.5	166.5	90	62	63	62		1.001	3.605	368
908	144.666	145.853		0.16	0.16	1.32	1.06	0.24	74	73	62	1.91	1.40	65	0.013	103	103	66.0	-0.02	0.41		101.8	167.2	163.3	64.5	166.2	90	62	63	62		1.001	3.442	351
909	144.825	146.013		0.16	0.16	1.33	1.06	0.24	74	74	62	1.92	1.40	65	0.013	103	103	66.0	-0.06	0.45		101.7	167.0	163.1	64.5	166.2	89	63	63	62		1.001	3.762	383
910	144.984	146.175		0.16	0.16	1.32	1.06	0.24	74	74	63	1.90	1.40	65	0.015	96	97	65.9	0.13	0.47		101.4	166.8	162.9	64.5	165.9	89	63	63	63		1.001	3.919	398
911	145.143	146.334		0.16	0.16	1.33	1.05	0.24	74	73	62	1.91	1.40	70	0.014	100	99	65.9	-0.02	0.43		101.3	166.7	162.8	64.5	165.8	122	63	63	62		1.001	3.600	365
912	145.302	146.494		0.16	0.16	1.33	1.06	0.24	74	74	62	1.91	1.40	68	0.014	100	100	66.0	-0.04	0.43		101.0	166.5	162.6	64.5	165.6	129	63	63	62		1.001	3.594	364
913	145.461	146.655		0.16	0.16	1.33	1.06	0.24	74	74	63	1.91	1.40	66	0.013	103	104	65.8	0.14	0.43		100.8	166.4	162.5	64.6	165.4	118	63	63	63		1.001	3.600	363
914	145.620	146.815		0.16	0.16	1.33	1.06	0.24	74	74	63	1.90	1.40	66	0.015	96	96	65.8	0.01	0.39		100.6	166.1	162.3	64.6	165.2	111	63	63	63		1.001	3.279	330
915	145.780	146.975		0.16	0.16	1.32	1.06	0.24	74	74	63	1.90	1.40	66	0.013	104	103	65.8	0.03	0.39		100.4	165.9	162.1	64.7	165.0	107	63	63	63		1.001	3.263	328
916	145.939	147.136		0.16	0.16	1.33	1.06	0.24	74	74	62	1.89	1.40	66	0.014	99	100	65.9	-0.08	0.43		100.2	165.7	161.8	64.7	164.9	103	63	63	62		1.001	3.587	360
917	146.098	147.297		0.16	0.16	1.32	1.05	0.24	74	74	62	1.91	1.40	66	0.014	99	100	65.7	0.15	0.43		99.9	165.6	161.8	64.8	164.7	101	63	63	62		1.001	3.610	361
918	146.257	147.456		0.16	0.16	1.32	1.06	0.24	74	74	62	1.91	1.40	66	0.013	103	102	65.7	-0.01	0.42		99.7	165.4	161.5	64.8	164.5	99	63	63	62		1.001	3.501	349
919	146.416	147.616		0.16	0.16	1.32	1.06	0.24	74	74	63	1.91	1.40	69	0.015	96	96	65.7	-0.02	0.38		99.7	165.3	161.4	64.7	164.4	97	63	63	63		1.001	3.183	318
920	146.575	147.777		0.16	0.16	1.32	1.06	0.24	74	74	63	1.89	1.40	67	0.015	96	97	65.8	-0.08	0.40		99.3	165.1	161.2	64.8	164.2	96	63	63	63		1.001	3.372	335

Elapsed Time	Particulate Sampling Data																	Fuel Weight, lb		Flow, gpm		Temperature Data, oF												
	Gas Meter Cubic Feet (1)	Gas Meter Cubic Feet (2)	Gas Meter Cubic Feet (amb)	Sample Rate, cfm (1)	Sample Rate, cfm (2)	Orifice dH (1)	Orifice dH (2)	Orifice dH (amb)	Meter oF (1)	Meter oF (2)	Meter oF (amb)	Meter Vac. in. Hg. (1)	Meter Vac. in. Hg. (2)	Dilution Tunnel Temp.	Dilution Tunnel dP	Pro. Rate (%) (1)	Pro. Rate (%) (2)	Scale Reading	Weight Change	Load Side Liquid Flow Rate	Boiler Side Liquid Flow Rate (optional)	Thermopile ΔT	Boiler to Heat Exch. Temp.	Heat Exch to Boiler Temp.	Inlet Load Temp.	Outlet Load Temp.	Stack	Filter (1)	Filter (2)	Ambient		Specific Heat of Inlet Water (BTU/lb-°F)	Mass Flow Rate of Inlet Water (lb/min)	Heat Output, Btu
921	146.734	147.937		0.16	0.16	1.32	1.06	0.24	74	74	63	1.89	1.40	67	0.015	96	96	65.7	0.12	0.40		99.1	164.9	161.1	64.9	163.9	95	63	63	63		1.001	3.356	333
922	146.893	148.097		0.16	0.16	1.33	1.06	0.24	74	74	63	1.91	1.40	66	0.012	107	107	65.8	-0.07	0.41		99.0	164.7	160.9	64.8	163.8	94	63	63	63		1.001	3.433	340
923	147.052	148.258		0.16	0.16	1.33	1.06	0.24	74	74	63	1.91	1.40	66	0.012	107	108	65.8	-0.01	0.39		98.9	164.5	160.7	64.8	163.7	93	63	63	63		1.001	3.276	325
924	147.212	148.418		0.16	0.16	1.33	1.05	0.24	75	74	63	1.90	1.40	66	0.014	100	99	65.8	-0.07	0.41		98.7	164.3	160.5	64.7	163.4	92	63	64	63		1.001	3.434	339
925	147.371	148.578		0.16	0.16	1.33	1.06	0.24	75	74	63	1.91	1.40	67	0.015	96	96	65.8	0.03	0.45		98.5	164.1	160.3	64.7	163.2	92	63	64	63		1.001	3.759	371
926	147.530	148.739		0.16	0.16	1.33	1.06	0.24	75	74	63	1.91	1.40	67	0.015	96	97	65.7	0.14	0.39		98.3	163.9	160.2	64.8	163.1	91	63	64	63		1.001	3.275	322
927	147.689	148.899		0.16	0.16	1.32	1.06	0.24	74	74	63	1.90	1.40	67	0.015	96	96	65.6	0.03	0.43		97.9	163.7	159.9	64.9	162.9	90	63	64	63		1.001	3.599	353
928	147.848	149.059		0.16	0.16	1.32	1.06	0.24	75	74	63	1.91	1.40	66	0.014	99	99	65.8	-0.14	0.41		97.9	163.6	159.8	64.8	162.7	89	63	64	63		1.001	3.437	337
929	148.007	149.220		0.16	0.16	1.32	1.06	0.24	75	74	63	1.91	1.40	67	0.012	107	108	65.7	0.13	0.41		97.6	163.4	159.6	65.0	162.6	89	63	64	63		1.001	3.433	335
930	148.166	149.380		0.16	0.16	1.32	1.05	0.24	75	74	63	1.91	1.40	67	0.015	96	96	65.8	-0.09	0.45		97.3	163.2	159.4	65.1	162.4	89	63	64	63		1.001	3.758	366
931	148.325	149.540		0.16	0.16	1.33	1.06	0.24	75	74	63	1.91	1.40	67	0.015	96	96	65.6	0.11	0.43		97.2	163.1	159.3	65.0	162.2	89	63	64	63		1.001	3.596	350
932	148.484	149.701		0.16	0.16	1.32	1.06	0.24	75	74	63	1.91	1.40	67	0.012	107	108	65.8	-0.17	0.41		97.1	162.9	159.1	64.9	162.0	88	63	64	63		1.001	3.437	334
933	148.643	149.861		0.16	0.16	1.33	1.06	0.24	75	74	63	1.92	1.40	67	0.015	96	96	65.8	-0.03	0.45		96.7	162.6	158.9	65.1	161.8	88	64	64	63		1.001	3.760	364
934	148.803	150.021		0.16	0.16	1.33	1.06	0.24	75	74	63	1.91	1.40	67	0.015	97	96	65.8	0.04	0.39		96.5	162.5	158.8	65.1	161.6	87	64	64	63		1.001	3.276	316
935	148.962	150.181		0.16	0.16	1.32	1.06	0.24	75	74	63	1.91	1.40	67	0.014	99	99	65.8	-0.02	0.43		96.6	162.3	158.6	64.9	161.5	87	64	64	63		1.001	3.595	348
936	149.121	150.342		0.16	0.16	1.31	1.05	0.24	75	74	63	1.90	1.40	72	0.016	93	94	65.6	0.22	0.43		96.4	162.2	158.5	64.9	161.3	120	64	64	63		1.001	3.600	347
937	149.279	150.501		0.16	0.16	1.32	1.06	0.24	75	74	63	1.91	1.40	73	0.015	96	96	65.7	-0.14	0.39		96.2	162.0	158.3	64.9	161.2	138	64	64	63		1.001	3.273	315
938	149.438	150.661		0.16	0.16	1.32	1.05	0.24	75	74	63	1.91	1.40	73	0.016	93	94	65.7	0.02	0.41		96.2	161.8	158.2	64.8	161.0	146	64	64	63		1.001	3.435	331
939	149.597	150.822		0.16	0.16	1.32	1.06	0.24	75	74	63	1.90	1.40	73	0.014	100	101	65.6	0.08	0.37		95.9	161.6	158.1	64.9	160.8	149	64	65	63		1.001	3.116	299
940	149.756	150.982		0.16	0.16	1.32	1.06	0.24	75	74	63	1.91	1.40	73	0.014	100	100	65.6	0.09	0.39		95.5	161.5	157.8	65.0	160.5	151	64	65	63		1.001	3.276	313
941	149.915	151.142		0.16	0.16	1.33	1.06	0.24	75	74	63	1.91	1.40	74	0.012	108	108	65.7	-0.11	0.39		95.3	161.3	157.6	65.0	160.4	153	64	65	63		1.001	3.280	313
942	150.074	151.303		0.16	0.16	1.33	1.06	0.24	75	74	63	1.91	1.40	74	0.016	94	94	65.5	0.18	0.43		95.2	161.1	157.4	65.0	160.2	154	64	65	63		1.001	3.584	342
943	150.234	151.462		0.16	0.16	1.32	1.06	0.24	75	74	64	1.90	1.40	74	0.017	91	90	65.5	0.03	0.41		95.0	160.9	157.2	65.0	160.1	155	65	65	64		1.001	3.438	327
944	150.393	151.623		0.16	0.16	1.32	1.06	0.24	75	74	63	1.91	1.40	74	0.015	97	97	65.4	0.09	0.43		94.9	160.7	157.0	65.0	159.9	156	65	65	63		1.001	3.595	341
945	150.552	151.783		0.16	0.16	1.32	1.06	0.24	75	74	64	1.92	1.40	75	0.016	94	94	65.3	0.12	0.41		94.7	160.5	156.8	64.9	159.6	159	65	65	64		1.001	3.428	325
946	150.710	151.943		0.16	0.16	1.32	1.06	0.24	75	74	63	1.90	1.40	76	0.015	96	97	65.0	0.23	0.42		94.4	160.4	156.8	65.1	159.5	165	65	65	63		1.001	3.535	334
947	150.869	152.103		0.16	0.16	1.32	1.06	0.24	75	74	64	1.92	1.40	76	0.014	100	100	64.8	0.27	0.38		94.4	160.4	156.7	65.1	159.5	175	65	65	64		1.001	3.167	299
948	151.028	152.264		0.16	0.16	1.33	1.05	0.24	75	74	64	1.91	1.40	78	0.015	97	98	64.6	0.12	0.39		94.2	160.4	156.8	65.2	159.4	185	65	66	64		1.001	3.272	309
949	151.187	152.423		0.16	0.16	1.33	1.06	0.24	75	74	64	1.92	1.40	81	0.014	101	100	64.4	0.25	0.41		94.3	160.5	156.8	65.2	159.5	199	66	66	64		1.001	3.418	323
950	151.346	152.583		0.16	0.16	1.33	1.06	0.24	75	74	64	1.93	1.40	82	0.013	105	105	64.0	0.34	0.41		94.3	160.7	157.0	65.3	159.6	210	66	66	64		1.001	3.427	324
951	151.505	152.744		0.16	0.16	1.33	1.06	0.24	75	74	64	1.91	1.40	84	0.015	98	98	63.6	0.42	0.43		94.7	161.0	157.3	65.3	160.0	220	66	66	64		1.001	3.593	341
952	151.665	152.903		0.16	0.16	1.32	1.06	0.24	75	74	63	1.92	1.40	85	0.014	102	101	63.4	0.20	0.39		95.0	161.4	157.7	65.3	160.3	229	66	67	63		1.001	3.272	311
953	151.823	153.063		0.16	0.16	1.33	1.06	0.24	75	74	64	1.91	1.40	87	0.014	101	101	63.0	0.36	0.41		95.5	161.8	158.1	65.2	160.7	239	67	67	64		1.001	3.433	328
954	151.982	153.224		0.16	0.16	1.32	1.06	0.24	75	74	64	1.93	1.40	88	0.014	101	102	62.5	0.54	0.43		96.0	162.5	158.7	65.3	161.3	249	67	67	64		1.001	3.594	345
955	152.140	153.383		0.16	0.16	1.32	1.06	0.24	75	74	64	1.93	1.40	88	0.014	101	101	62.0	0.50	0.41		96.5	163.1	159.2	65.3	161.8	261	67	68	64		1.001	3.429	331
956	152.299	153.542		0.16	0.16	1.32	1.06	0.24	75	74	64	1.93	1.40	89	0.014	101	101	61.7	0.28	0.45		97.0	163.8	159.9	65.4	162.5	271	67	68	64		1.001	3.752	365
957	152.457	153.703		0.16	0.16	1.33	1.06	0.24	75	75	64	1.93	1.40	90	0.012	109	110	61.3	0.41	0.41		97.8	164.8	160.9	65.6	163.4	279	67	68	64		1.001	3.429	336
958	152.615	153.861		0.16	0.16	1.33	1.05	0.24	75	75	64	1.92	1.40	91	0.013	105	104	60.6	0.73	0.39		98.7	165.8	161.8	65.5	164.3	287	68	68	64		1.001	3.271	323
959	152.775	154.021		0.16	0.16	1.33	1.05	0.24	75	75	64	1.92	1.40	93	0.014	102	102	60.3	0.30	0.41		99.5	166.7	162.7	65.7	165.2	294	68	68	64		1.001	3.430	342
960	152.934	154.181		0.16	0.16	1.33	1.05	0.24	75	75	64	1.94	1.40	94	0.014	102	102	59.8	0.53	0.41		100.5	167.7	163.7	65.7	166.2	299	68	69	64		1.001	3.433	345
961	153.092	154.339		0.16	0.16	1.32	1.05	0.24	75	75	64	1.94	1.40	95	0.014	101	101	59.2	0.54	0.43		101.5	168.7	164.6	65.7	167.2	306	69	69	64		1.001	3.589	365
962	153.250	154.498		0.16	0.16	1.32	1.05	0.24	75	75	64	1.93	1.40	95	0.013	105	105	58.7	0.50	0.39		102.5	169.7	165.6	65.8	168.3	312	69	69	64		1.001	3.269	335
963	153.408	154.658		0.16	0.16	1.32	1.05	0.24	75	75	64	1.93	1.40	96	0.013	105	106	58.1	0.66	0.39		103.6	170.8	166.7	65.8	169.4	316	69	70	64		1.001	3.269	339
964	153.566	154.817		0.16	0.16	1.32	1.05	0.24	75	75	64	1.94	1.40	97	0.012	110	110	57.9	0.18	0.41		104.9	171.9	167.8	65.6	170.5	320	69	70	64		1.001	3.435	361
965	153.724	154.976		0.16	0.16	1.32	1.04	0.24	75	75	64	1.93	1.40	97	0.012	110	110	57.4	0.52	0.39		106.2	173.1	168.9	65.5	171.7	323	70	70	64		1.001	3.273	348
966	153.883	155.135		0.16	0.16	1.32	1.04	0.24	75	75	64	1.95	1.40	98	0.014	102	102	56.7	0.70	0.41		107.1	174.3	169.9	65.7	172.8	327	70	70	64		1.001	3.428	368
967	154.041	155.293		0.16	0.16	1.32	1.05	0.24	75	75	64	1.93	1.40	99	0.014	102	101	56.2	0.48	0.41		107.8	175.4	171.1	66.0	173.8	331	70	71	64		1.001	3.431	370
968	154.200	155.453		0.16	0.16	1.31	1.05	0.24	75	75	64	1.94	1.40	99	0.014	102	102	55.5	0.67	0.43		108.9	176.6	172.2	66.2	175.1	334	70	71	64		1.001	3.595	392
969	154.357	155.611		0.16	0.16	1.32	1.04	0.24	75	75	64	1.93	1.40	100	0.014	101	101	55.3	0.23	0.45		109.9	178.0	173.5	66.4	176.4	337	70	71	64		1.001	3.736	411
970	154.515	155.769		0.16	0.16	1.31	1.04	0.24	75	75	64	1.94	1.40	101	0.013	106	105	54.6	0.68	0.41		111.0	179.3	174.8	66.6	177.6	342	71	72	64		1.001	3.431	381
971	154.673	155.928		0.16	0.16	1.32	1.04	0.24	75	75	64	1.94	1.40	102	0.014	102	102	53.8	0.83	0.43		112.2	180.5	176.0	66.7	178.9	345	71	72	64		1.001	3.592	403
972	154.831	156.086		0.16	0.16	1.32	1.04	0.24	75	75	64	1.95	1.40	102	0.015	98	98	53.5	0.28	0.36		113.6	181.9	177.2	66.7	180.2	346	71	72	64		1.001	2.981	339
973	154.989	156.246		0.16	0.16	1.32	1.04	0.24	75	75	64	1.95	1.40	102	0.015	98	99	52.9	0.63	0.42		114.4	183.1	178.4	66.9	181.3	347	71	72	64		1.001	3.499	401
974	155.147	156.403		0.16	0.16	1.32	1.04	0.24	75	75	65	1.94	1.40	96	0.014	101	100	52.4	0.47	0.40		115.8	184.3	179.6	66.8	182.7	349	71	72	65		1.001	3.350	389
975	155.306	156.562		0.16	0.16	1.31	1.04	0.24	75	75	66	1.92	1.40	84	0.014	101	100	52.3	0.14	0.43		116.4	185.3	180.5	67.2	183.7	317	70	71	66		1.001	3.587	418
976	155.464	156.721		0.16	0.16	1.32	1.04	0.24	75	75	65	1.93	1.40	81	0.013	104	104	52.0	0.23	0.39		117.0	186.0	181.2	67.5	184.5	294	70	70	65		1.001	3.269	383
977	155.622	156.880		0.16	0.16	1.31	1.04	0.24	75	75	64	1.92	1.40	77	0.014	100	100	51.9	0.15	0.43		117.2	186.7	181.9	67.9	185.1	279	69	69	64		1.001	3.612	424
978	155.781	157.039		0.16	0.16	1.32	1.05	0.24	75	75	65	1.92	1.40	76	0.015	97	96	51.6	0.24	0.45		117.7	187.0	182.3	68.1	185.8	267	69	69	65		1.001	3.745	441
979	155.939	157.199		0.16	0.16	1.32	1.05	0.24	75	75	64	1.93	1.40	75	0.012	107	108	51.7	-0.09	0.41		117.7	187.3	182.5	68.1	185.9	257	68	69	64		1.001	3.428	404
980	156.098	157.358		0.16	0.16	1.32	1.05	0.24	76	75	64	1.93	1.40	74	0.016	93	93	51.6	0.09	0.39		118.0	187.6	182.8	68.2	186.2	248	68	69	64		1.001	3.263	385
981	156.258	157.518		0.16	0.16	1.32	1.05	0.24	76	75	64	1.91	1.40	74	0.013	104	104	51.5	0.09	0.37		118.3	187.7	182.9	68.1	186.4	241	68	69	64		1.001	3.099	367
982	156.416	157.678		0.16	0.16	1.31	1.05	0.24	76	75	64	1.93	1.40	74	0.014	99	100	51.5	0.05	0.41		118.2	187.9	183.1	68.4	186.6	234	68	68	64		1.001	3.418	405

Elapsed Time	Particulate Sampling Data																	Fuel Weight, lb		Flow, gpm		Temperature Data, oF												
	Gas Meter Cubic Feet (1)	Gas Meter Cubic Feet (2)	Gas Meter Cubic Feet (amb)	Sample Rate, cfm (1)	Sample Rate, cfm (2)	Orifice dH (1)	Orifice dH (2)	Orifice dH (amb)	Meter oF (1)	Meter oF (2)	Meter oF (amb)	Meter Vac. in. Hg. (1)	Meter Vac. in. Hg. (2)	Dilution Tunnel Temp.	Dilution Tunnel dP	Pro. Rate (%) (1)	Pro. Rate (%) (2)	Scale Reading	Weight Change	Load Side Liquid Flow Rate	Boiler Side Liquid Flow Rate (optional)	Thermopile ΔT	Boiler to Heat Exch. Temp.	Heat Exch to Boiler Temp.	Inlet Load Temp.	Outlet Load Temp.	Stack	Filter (1)	Filter (2)	Ambient		Specific Heat of Inlet Water (BTU/lb-°F)	Mass Flow Rate of Inlet Water (lb/min)	Heat Output, Btu
983	156.576	157.838		0.16	0.16	1.33	1.08	0.24	76	75	64	1.94	1.40	73	0.015	97	96	51.6	-0.07	0.41		118.4	187.9	183.3	68.4	186.8	228	68	68	64		1.001	3.426	406
984	156.736	158.000		0.16	0.16	1.33	1.07	0.24	76	75	64	1.94	1.40	73	0.015	97	98	51.4	0.17	0.43		118.7	188.0	183.3	68.1	186.8	223	68	68	64		1.001	3.588	426
985	156.895	158.162		0.16	0.16	1.33	1.07	0.24	76	75	64	1.93	1.40	73	0.015	96	98	51.4	-0.04	0.45		118.9	188.0	183.3	68.1	186.9	218	68	68	64		1.001	3.748	446
986	157.055	158.323		0.16	0.16	1.34	1.07	0.24	76	75	64	1.94	1.40	72	0.014	100	100	51.3	0.08	0.41		118.8	188.1	183.8	68.2	187.0	214	68	68	64		1.001	3.419	407
987	157.215	158.484		0.16	0.16	1.33	1.08	0.24	76	75	64	1.94	1.40	71	0.015	97	97	51.4	-0.08	0.39		119.1	188.1	183.4	67.9	187.0	211	68	68	64		1.001	3.261	389
988	157.375	158.646		0.16	0.16	1.34	1.08	0.24	76	75	64	1.93	1.40	71	0.012	108	109	51.3	0.09	0.43		119.3	188.1	183.4	67.8	187.1	207	68	68	64		1.001	3.586	428
989	157.535	158.808		0.16	0.16	1.34	1.07	0.24	76	75	64	1.92	1.40	71	0.015	97	97	51.4	-0.04	0.41		119.3	188.0	183.4	67.8	187.0	203	67	68	64		1.001	3.427	409
990	157.695	158.969		0.16	0.16	1.34	1.07	0.24	76	75	64	1.94	1.40	70	0.015	97	97	51.4	-0.01	0.39		118.9	188.0	183.3	68.0	186.9	200	67	68	64		1.001	3.271	389
991	157.855	159.131		0.16	0.16	1.34	1.08	0.24	76	75	64	1.93	1.40	70	0.015	97	97	51.3	0.11	0.43		118.7	188.0	183.3	68.2	186.8	196	67	68	64		1.001	3.586	426
992	158.015	159.293		0.16	0.16	1.34	1.08	0.24	76	75	64	1.93	1.40	70	0.013	104	105	51.4	-0.17	0.39		118.8	187.9	183.2	68.1	186.9	192	67	67	64		1.001	3.260	388
993	158.175	159.455		0.16	0.16	1.34	1.07	0.24	76	75	64	1.93	1.40	70	0.013	104	105	51.3	0.16	0.41		118.7	187.9	183.1	68.0	186.8	188	67	67	64		1.001	3.419	406
994	158.336	159.616		0.16	0.16	1.33	1.07	0.24	76	75	64	1.93	1.40	70	0.013	104	104	51.3	0.00	0.41		118.7	187.8	183.1	68.0	186.6	185	67	67	64		1.001	3.424	407
995	158.496	159.778		0.16	0.16	1.34	1.07	0.24	76	75	64	1.92	1.40	70	0.014	100	101	51.3	-0.04	0.41		118.7	187.7	183.0	68.0	186.6	181	67	67	64		1.001	3.429	407
996	158.655	159.940		0.16	0.16	1.34	1.08	0.24	76	75	64	1.92	1.40	70	0.012	107	109	51.2	0.09	0.41		118.4	187.7	182.9	68.1	186.5	178	67	67	64		1.001	3.428	406
997	158.815	160.101		0.16	0.16	1.34	1.07	0.24	76	75	65	1.92	1.40	70	0.014	100	100	51.2	-0.01	0.41		118.2	187.6	182.9	68.2	186.5	175	67	67	65		1.001	3.425	405
998	158.975	160.262		0.16	0.16	1.33	1.08	0.24	76	75	65	1.92	1.40	70	0.015	97	97	51.2	0.01	0.47		118.3	187.5	182.8	68.1	186.5	172	67	67	65		1.001	3.909	463
999	159.135	160.424		0.16	0.16	1.34	1.08	0.24	76	75	65	1.94	1.40	70	0.016	94	94	51.2	0.04	0.42		118.1	187.4	182.8	68.2	186.3	169	67	67	65		1.001	3.514	415
1000	159.295	160.586		0.16	0.16	1.34	1.08	0.24	76	76	65	1.93	1.40	70	0.015	97	97	51.2	0.01	0.41		118.0	187.4	182.9	68.2	186.2	166	67	67	65		1.001	3.428	405
1001	159.455	160.747		0.16	0.16	1.33	1.07	0.24	76	76	64	1.92	1.40	70	0.014	100	100	51.2	0.00	0.39		118.1	187.2	182.6	68.0	186.1	164	67	67	64		1.001	3.271	387
1002	159.615	160.909		0.16	0.16	1.33	1.07	0.24	76	76	65	1.93	1.40	70	0.012	108	109	51.2	0.00	0.41		118.2	187.1	182.5	67.9	186.1	161	67	67	65		1.001	3.440	407
1003	159.774	161.070		0.16	0.16	1.34	1.08	0.24	76	76	65	1.94	1.40	70	0.013	103	104	51.2	-0.06	0.41		117.5	186.9	182.2	68.3	185.8	159	67	67	65		1.001	3.430	404
1004	159.934	161.233		0.16	0.16	1.34	1.07	0.24	76	76	64	1.94	1.40	70	0.014	100	101	51.3	-0.03	0.41		117.7	186.8	182.1	68.1	185.8	157	66	67	64		1.001	3.429	404
1005	160.094	161.393		0.16	0.16	1.34	1.07	0.24	76	76	64	1.94	1.40	70	0.012	108	107	51.2	0.12	0.39		117.2	186.7	182.2	68.4	185.6	154	67	67	64		1.001	3.268	383
1006	160.254	161.555		0.16	0.16	1.34	1.07	0.24	76	76	65	1.94	1.40	70	0.015	97	97	51.3	-0.16	0.37		117.0	186.6	182.0	68.4	185.4	152	66	67	65		1.001	3.102	363
1007	160.414	161.716		0.16	0.16	1.34	1.08	0.24	76	76	64	1.92	1.40	70	0.015	97	97	51.3	0.06	0.39		117.0	186.5	181.8	68.3	185.3	150	66	67	64		1.001	3.267	383
1008	160.575	161.879		0.16	0.16	1.34	1.08	0.24	76	76	64	1.94	1.40	70	0.012	109	109	51.5	-0.21	0.43		116.6	186.2	181.6	68.6	185.2	148	66	66	64		1.001	3.589	419
1009	160.735	162.040		0.16	0.16	1.33	1.07	0.24	76	76	64	1.94	1.40	70	0.016	94	94	51.2	0.29	0.45		116.5	186.2	181.6	68.4	184.9	146	66	66	64		1.001	3.750	437
1010	160.895	162.201		0.16	0.16	1.34	1.08	0.24	76	76	65	1.94	1.40	70	0.016	94	94	51.2	-0.03	0.41		116.8	186.0	181.4	68.2	185.0	145	66	66	65		1.001	3.427	401
1011	161.055	162.363		0.16	0.16	1.33	1.08	0.24	76	76	64	1.94	1.40	70	0.014	100	101	51.2	-0.01	0.41		116.6	185.9	181.4	68.3	184.9	143	66	66	64		1.001	3.426	400
1012	161.215	162.526		0.16	0.16	1.33	1.08	0.24	76	76	65	1.93	1.40	70	0.012	108	109	51.2	-0.02	0.39		116.6	185.8	181.2	68.1	184.8	141	66	66	65		1.001	3.266	381
1013	161.375	162.687		0.16	0.16	1.33	1.08	0.24	76	76	65	1.92	1.40	70	0.012	108	108	51.2	0.00	0.37		116.4	185.7	181.1	68.2	184.6	141	66	66	65		1.001	3.104	362
1014	161.534	162.848		0.16	0.16	1.34	1.08	0.24	76	76	64	1.94	1.40	70	0.014	99	100	51.2	0.02	0.41		116.4	185.6	181.0	68.1	184.5	138	66	66	64		1.001	3.425	399
1015	161.694	163.010		0.16	0.16	1.33	1.08	0.24	76	76	64	1.94	1.40	70	0.015	97	97	51.3	-0.09	0.39		116.5	185.4	180.8	67.9	184.4	137	66	66	64		1.001	3.269	381
1016	161.854	163.172		0.16	0.16	1.33	1.07	0.24	76	76	64	1.93	1.40	70	0.014	100	101	51.1	0.22	0.43		116.2	185.3	180.7	68.0	184.2	136	66	66	64		1.001	3.584	417
1017	162.013	163.333		0.16	0.16	1.33	1.08	0.24	76	76	65	1.94	1.40	81	0.013	104	105	50.9	0.24	0.41		116.1	185.1	180.5	68.0	184.0	163	67	68	65		1.001	3.422	398
1018	162.173	163.494		0.16	0.16	1.34	1.07	0.24	76	76	65	1.93	1.40	75	0.012	109	109	50.8	0.01	0.45		115.9	184.8	180.3	68.0	183.8	181	66	66	65		1.001	3.742	434
1019	162.333	163.656		0.16	0.16	1.34	1.07	0.24	76	76	65	1.92	1.40	71	0.014	100	101	51.0	-0.16	0.41		115.7	184.6	180.0	67.9	183.6	163	66	66	65		1.001	3.429	397
1020	162.493	163.817		0.16	0.16	1.34	1.07	0.24	76	76	65	1.94	1.40	70	0.014	100	100	50.8	0.16	0.45		115.7	184.6	180.0	67.8	183.4	153	66	66	65		1.001	3.742	433
1021	162.653	163.979		0.16	0.16	1.34	1.07	0.24	76	76	65	1.93	1.40	70	0.013	104	104	50.6	0.23	0.41		115.6	184.3	179.8	67.8	183.3	146	66	66	65		1.001	3.419	396
1022	162.813	164.140		0.16	0.16	1.34	1.08	0.24	76	76	65	1.93	1.40	70	0.012	108	108	50.8	-0.17	0.43		115.5	184.3	179.8	67.7	183.2	141	66	66	65		1.001	3.582	414
1023	162.973	164.303		0.16	0.16	1.33	1.08	0.24	76	76	65	1.94	1.40	70	0.014	100	101	50.8	-0.01	0.43		115.7	184.1	179.6	67.4	183.1	138	66	66	65		1.001	3.569	413
1024	163.133	164.464		0.16	0.16	1.33	1.07	0.24	76	76	65	1.93	1.40	70	0.014	100	100	50.8	-0.01	0.43		115.8	184.0	179.5	67.2	183.0	135	66	66	65		1.001	3.589	416
1025	163.293	164.625		0.16	0.16	1.33	1.08	0.24	76	76	65	1.94	1.40	70	0.014	100	100	50.8	0.03	0.39		115.6	183.8	179.3	67.2	182.8	133	66	66	65		1.001	3.266	378
1026	163.453	164.787		0.16	0.16	1.33	1.08	0.24	76	76	65	1.94	1.40	70	0.015	97	97	50.9	-0.12	0.44		115.5	183.8	179.3	67.3	182.8	131	66	66	65		1.001	3.696	427
1027	163.613	164.949		0.16	0.16	1.33	1.08	0.24	76	76	65	1.93	1.40	70	0.015	97	97	50.9	0.01	0.43		116.4	183.7	181.3	66.4	182.8	129	66	66	65		1.001	3.554	414
1028	163.772	165.111		0.16	0.16	1.33	1.07	0.24	76	76	65	1.92	1.40	70	0.014	99	101	50.8	0.08	0.39		119.6	183.6	181.0	63.6	183.2	129	66	66	65		1.001	3.262	391
1029	163.932	165.272		0.16	0.16	1.34	1.08	0.24	76	76	65	1.93	1.40	70	0.015	97	97	50.8	-0.05	0.40		120.8	183.5	181.0	62.3	183.1	127	66	66	65		1.001	3.311	400
1030	164.092	165.434		0.16	0.16	1.33	1.08	0.24	76	76	65	1.94	1.40	70	0.015	97	97	50.7	0.18	0.41		121.0	183.3	180.8	61.8	182.8	126	66	66	65		1.001	3.429	416
1031	164.252	165.596		0.16	0.16	1.34	1.07	0.24	76	76	65	1.92	1.40	70	0.015	97	97	50.8	-0.12	0.39		121.3	183.2	180.6	61.5	182.8	125	66	66	65		1.001	3.266	396
1032	164.412	165.757		0.16	0.16	1.34	1.07	0.24	76	76	65	1.93	1.40	70	0.014	100	100	50.8	0.01	0.41		121.2	183.0	180.5	61.5	182.6	124	66	66	65		1.001	3.432	416
1033	164.572	165.919		0.16	0.16	1.34	1.07	0.24	76	76	65	1.92	1.40	70	0.014	100	101	50.8	-0.01	0.41		121.0	183.0	180.5	61.4	182.5	123	66	66	65		1.001	3.426	415
1034	164.732	166.081		0.16	0.16	1.34	1.08	0.24	76	76	66	1.92	1.40	70	0.013	104	104	50.7	0.04	0.41		121.0	182.8	180.3	61.4	182.4	121	66	66	66		1.001	3.432	416
1035	164.892	166.243		0.16	0.16	1.34	1.07	0.24	76	76	66	1.93	1.40	70	0.015	97	97	50.9	-0.19	0.43		120.8	182.7	180.1	61.4	182.2	121	66	66	66		1.001	3.591	434
1036	165.053	166.404		0.16	0.16	1.34	1.08	0.24	76	76	66	1.93	1.40	70	0.015	97	97	50.8	0.10	0.41		120.4	182.5	180.0	61.5	181.9	120	66	66	66		1.001	3.431	414
1037	165.213	166.566		0.16	0.16	1.34	1.08	0.24	76	76	65	1.94	1.40	70	0.014	100	101	50.8	0.07	0.39		120.3	182.2	179.7	61.6	181.9	119	66	66	65		1.001	3.266	393
1038	165.373	166.728		0.16	0.16	1.34	1.08	0.24	76	76	65	1.93	1.40	70	0.014	100	101	50.8	-0.03	0.37		120.1	182.1	179.6	61.7	181.8	119	66	66	65		1.001	3.106	373
1039	165.533	166.890		0.16	0.16	1.33	1.08	0.24	76	76	65	1.92	1.40	70	0.014	100	101	50.8	-0.03	0.41		119.9	182.0	179.6	61.7	181.6	118	66	66	65		1.001	3.427	411
1040	165.693	167.051		0.16	0.16	1.33	1.07	0.24	76	76	65	1.94	1.40	70	0.013	104	104	50.8	0.02	0.39		119.7	181.9	179.4	61.8	181.5	117	66	67	65		1.001	3.271	392
1041	165.852	167.213		0.16	0.16	1.33	1.08	0.24	76	76	65	1.94	1.40	70	0.013	103	104	50.7	0.08	0.37		119.4	181.7	179.3	61.9	181.3	116	66	66	65		1.001	3.110	372
1042	166.012	167.374		0.16	0.16	1.33	1.08	0.24	76	76	65	1.94	1.40	70	0.014	100	100	50.8	-0.12	0.41		119.1	181.5	179.2	61.9	181.1	116	66	66	65		1.001	3.429	409
1043	166.172	167.537		0.16	0.16	1.33	1.07	0.24	76	76	65	1.94	1.40	70	0.014	100	101	50.8	0.07	0.41		118.9	181.3	179.0	62.0	180.9	115	66	66	65		1.001	3.427	408
1044	166.332	167.698		0.16	0.16	1.34	1.07	0.24	76	76	65	1.91	1.40	71	0.014	100	100	50.8	-0.03	0.41		118.5	181.2	178.9	62.1	180.6	115	66	67	65		1.001	3.428	407

Elapsed Time	Particulate Sampling Data																	Fuel Weight, lb		Flow, gpm		Temperature Data, oF												
	Gas Meter Cubic Feet (1)	Gas Meter Cubic Feet (2)	Gas Meter Cubic Feet (amb)	Sample Rate, cfm (1)	Sample Rate, cfm (2)	Orifice dH (1)	Orifice dH (2)	Orifice dH (amb)	Meter oF (1)	Meter oF (2)	Meter oF (amb)	Meter Vac. in. Hg. (1)	Meter Vac. in. Hg. (2)	Dilution Tunnel Temp.	Dilution Tunnel dP	Pro. Rate (%) (1)	Pro. Rate (%) (2)	Scale Reading	Weight Change	Load Side Liquid Flow Rate	Boiler Side Liquid Flow Rate (optional)	Thermopile ΔT	Boiler to Heat Exch. Temp.	Heat Exch to Boiler Temp.	Inlet Load Temp.	Outlet Load Temp.	Stack	Filter (1)	Filter (2)	Ambient		Specific Heat of Inlet Water (BTU/lb-°F)	Mass Flow Rate of Inlet Water (lb/min)	Heat Output, Btu
1045	166.491	167.859		0.16	0.16	1.34	1.08	0.24	76	76	66	1.93	1.40	70	0.014	99	100	50.7	0.05	0.43		118.3	181.0	178.7	62.1	180.4	114	66	67	66		1.001	3.563	424
1046	166.651	168.021		0.16	0.16	1.34	1.08	0.24	76	76	65	1.93	1.40	70	0.014	100	101	50.8	-0.05	0.39		118.2	180.8	178.6	62.2	180.4	115	66	67	65		1.001	3.266	387
1047	166.811	168.183		0.16	0.16	1.34	1.07	0.24	76	76	65	1.94	1.40	70	0.016	94	94	50.8	-0.04	0.41		117.9	180.6	178.4	62.2	180.1	112	66	67	65		1.001	3.426	404
1048	166.971	168.344		0.16	0.16	1.33	1.07	0.24	76	76	65	1.93	1.40	76	0.014	101	101	50.8	0.08	0.39		117.8	180.5	178.2	62.3	180.1	131	67	67	65		1.001	3.271	386
1049	167.131	168.506		0.16	0.16	1.33	1.07	0.24	77	76	65	1.92	1.40	79	0.014	101	101	50.6	0.14	0.41		117.6	180.4	178.1	62.3	179.9	151	67	67	65		1.001	3.416	402
1050	167.291	168.668		0.16	0.16	1.33	1.07	0.24	77	76	65	1.92	1.40	73	0.014	100	101	50.6	-0.04	0.41		117.4	180.2	177.9	62.3	179.7	148	67	67	65		1.001	3.444	405
1051	167.452	168.829		0.16	0.16	1.34	1.08	0.24	77	76	66	1.93	1.40	71	0.014	101	100	50.6	0.00	0.41		117.3	179.9	177.7	62.3	179.6	134	67	67	66		1.001	3.427	402
1052	167.611	168.991		0.16	0.16	1.34	1.08	0.24	77	76	66	1.92	1.40	71	0.013	103	105	50.6	0.04	0.43		117.2	179.9	177.7	62.3	179.5	125	67	67	66		1.001	3.563	418
1053	167.771	169.152		0.16	0.16	1.33	1.08	0.24	77	76	66	1.93	1.40	71	0.014	100	100	50.6	0.04	0.39		116.9	179.7	177.5	62.2	179.1	120	67	67	66		1.001	3.275	383
1054	167.931	169.315		0.16	0.16	1.33	1.07	0.24	77	76	66	1.93	1.40	71	0.016	94	95	50.6	0.02	0.37		116.9	179.6	177.4	62.2	179.1	117	67	67	66		1.001	3.107	364
1055	168.091	169.476		0.16	0.16	1.33	1.07	0.24	77	76	66	1.92	1.40	70	0.013	104	104	50.6	-0.05	0.39		116.9	179.4	177.2	62.2	179.1	114	67	67	66		1.001	3.268	382
1056	168.250	169.637		0.16	0.16	1.33	1.07	0.24	77	76	65	1.93	1.40	71	0.013	103	104	50.5	0.14	0.42		116.7	179.2	177.0	62.2	178.8	112	67	67	65		1.001	3.479	406
1057	168.410	169.798		0.16	0.16	1.33	1.08	0.24	77	76	65	1.94	1.40	71	0.012	108	108	50.5	-0.08	0.43		116.4	179.0	176.8	62.1	178.6	111	67	67	65		1.001	3.586	418
1058	168.570	169.961		0.16	0.16	1.33	1.08	0.24	77	76	65	1.93	1.40	71	0.013	104	105	50.5	0.04	0.37		116.2	178.9	176.6	62.1	178.3	110	67	67	65		1.001	3.106	361
1059	168.730	170.122		0.16	0.16	1.33	1.07	0.24	77	76	66	1.92	1.40	71	0.016	94	94	50.6	-0.10	0.43		116.3	178.7	176.4	62.1	178.4	109	67	67	66		1.001	3.587	417
1060	168.890	170.283		0.16	0.16	1.34	1.07	0.24	77	76	66	1.92	1.40	71	0.015	97	97	50.5	0.08	0.32		115.7	178.6	176.8	62.0	177.7	108	67	67	66		1.001	2.629	305
1061	169.050	170.445		0.16	0.16	1.33	1.08	0.24	77	76	66	1.92	1.40	71	0.015	97	97	50.5	-0.01	0.35		115.6	178.6	175.9	62.3	177.9	108	67	67	66		1.001	2.947	341
1062	169.209	170.608		0.16	0.16	1.34	1.07	0.24	77	76	66	1.93	1.40	71	0.014	99	101	50.5	0.01	0.33		115.5	178.5	175.9	62.5	178.0	107	67	67	66		1.001	2.785	322
1063	169.370	170.769		0.16	0.16	1.34	1.08	0.24	77	76	66	1.92	1.40	71	0.012	109	108	50.5	-0.01	0.33		115.2	178.5	175.8	62.6	177.8	106	67	67	66		1.001	2.781	321
1064	169.530	170.930		0.16	0.16	1.33	1.08	0.24	77	76	66	1.92	1.40	71	0.014	100	100	50.6	-0.03	0.33		114.8	178.4	175.7	62.8	177.6	106	67	67	66		1.001	2.784	320
1065	169.690	171.092		0.16	0.16	1.33	1.07	0.24	77	76	66	1.93	1.40	71	0.015	97	97	50.5	0.07	0.30		114.7	178.3	175.4	62.9	177.6	105	67	67	66		1.001	2.469	283
1066	169.850	171.254		0.16	0.16	1.34	1.07	0.24	77	77	66	1.93	1.40	71	0.012	108	109	50.6	-0.11	0.33		113.6	178.1	175.2	63.7	177.4	104	67	67	66		1.001	2.785	317
1067	170.010	171.415		0.16	0.16	1.34	1.07	0.24	77	77	66	1.92	1.40	71	0.016	94	93	50.5	0.09	0.32		110.6	178.0	175.0	66.5	177.2	104	67	67	66		1.001	2.628	291
1068	170.170	171.577		0.16	0.16	1.34	1.07	0.24	77	77	66	1.92	1.40	71	0.014	100	101	50.6	-0.06	0.30		108.9	177.9	175.0	68.2	177.1	103	67	67	66		1.001	2.468	269
1069	170.330	171.739		0.16	0.16	1.33	1.07	0.24	77	77	66	1.93	1.40	71	0.013	104	104	50.5	0.07	0.30		108.1	177.9	174.9	69.0	177.0	103	67	67	66		1.001	2.469	267
1070	170.490	171.901		0.16	0.16	1.33	1.07	0.24	77	77	66	1.93	1.40	71	0.016	94	94	50.7	-0.17	0.30		107.9	177.8	174.8	69.0	176.9	102	67	67	66		1.001	2.466	266
1071	170.650	172.062		0.16	0.16	1.33	1.07	0.24	77	77	66	1.92	1.40	71	0.014	100	100	50.5	0.17	0.32		107.3	177.6	174.6	69.3	176.6	102	67	67	66		1.001	2.624	282
1072	170.810	172.224		0.16	0.16	1.33	1.07	0.24	77	77	66	1.92	1.40	71	0.014	100	101	50.4	0.11	0.32		106.7	177.5	174.5	70.0	176.6	101	67	67	66		1.001	2.627	281
1073	170.970	172.386		0.16	0.16	1.33	1.08	0.24	77	77	66	1.93	1.40	71	0.013	104	104	50.6	-0.16	0.34		106.7	177.4	174.4	70.0	176.7	101	67	67	66		1.001	2.837	303
1074	171.130	172.547		0.16	0.16	1.34	1.08	0.24	77	77	66	1.93	1.40	71	0.014	100	100	50.6	-0.09	0.32		106.4	177.3	174.3	70.0	176.4	100	67	67	66		1.001	2.624	280
1075	171.290	172.709		0.16	0.16	1.34	1.07	0.24	77	77	66	1.92	1.40	71	0.015	97	97	50.6	0.08	0.32		106.5	177.2	174.2	69.8	176.3	100	67	67	66		1.001	2.677	285
1076	171.450	172.870		0.16	0.16	1.34	1.08	0.24	77	77	66	1.92	1.40	71	0.014	100	100	50.4	0.14	0.33		106.1	177.0	174.1	70.2	176.3	100	67	67	66		1.001	2.746	292
1077	171.610	173.033		0.16	0.16	1.34	1.08	0.24	77	77	66	1.92	1.40	71	0.013	104	105	50.5	-0.07	0.33		105.8	176.9	174.0	70.2	175.9	99	67	67	66		1.001	2.764	293
1078	171.770	173.194		0.16	0.16	1.34	1.07	0.24	77	77	66	1.92	1.40	71	0.015	97	97	50.6	-0.07	0.32		106.4	176.8	173.9	69.4	175.9	100	67	67	66		1.001	2.626	280
1079	171.931	173.355		0.16	0.16	1.34	1.07	0.24	77	77	66	1.93	1.40	71	0.015	97	97	50.5	0.10	0.28		106.0	176.7	173.8	69.7	175.7	100	67	67	66		1.001	2.309	245
1080	172.091	173.517		0.16	0.16	1.33	1.07	0.24	77	77	66	1.95	1.40	75	0.015	97	97	50.3	0.14	0.30		105.5	176.6	173.6	70.1	175.6	132	67	67	66		1.001	2.468	261
1081	172.251	173.679		0.16	0.16	1.33	1.07	0.24	77	77	66	1.94	1.40	74	0.013	104	105	50.4	-0.04	0.32		105.7	176.5	173.5	69.8	175.5	142	67	67	66		1.001	2.624	278
1082	172.411	173.840		0.16	0.16	1.33	1.07	0.24	77	77	66	1.94	1.40	72	0.015	97	97	50.5	-0.10	0.28		105.3	176.3	173.3	70.2	175.4	129	67	67	66		1.001	2.307	243
1083	172.571	174.001		0.16	0.16	1.33	1.07	0.24	77	77	66	1.93	1.40	71	0.014	100	100	50.5	-0.03	0.33		105.0	176.1	172.6	70.2	175.3	120	67	67	66		1.001	2.782	293
1084	172.731	174.163		0.16	0.16	1.33	1.08	0.24	77	77	66	1.92	1.40	71	0.013	104	104	50.4	0.09	0.35		104.9	175.9	172.5	70.0	174.9	114	67	67	66		1.001	2.940	309
1085	172.891	174.326		0.16	0.16	1.33	1.08	0.24	77	77	66	1.93	1.40	71	0.011	113	114	50.4	0.00	0.41		105.1	175.7	172.0	69.8	174.9	111	67	67	66		1.001	3.422	360
1086	173.051	174.487		0.16	0.16	1.33	1.07	0.24	77	77	66	1.92	1.40	71	0.015	97	97	50.4	0.06	0.41		104.9	175.6	171.8	69.7	174.6	108	67	67	66		1.001	3.424	360
1087	173.211	174.648		0.16	0.16	1.34	1.07	0.24	77	77	66	1.93	1.40	72	0.014	100	100	50.3	0.01	0.35		105.1	175.4	171.7	69.4	174.5	106	67	67	66		1.001	2.944	310
1088	173.371	174.810		0.16	0.16	1.33	1.08	0.24	77	77	66	1.94	1.40	72	0.016	94	94	50.3	0.02	0.35		104.9	175.3	171.5	69.5	174.4	104	67	67	66		1.001	2.941	309
1089	173.531	174.972		0.16	0.16	1.34	1.07	0.24	77	77	66	1.93	1.40	71	0.014	100	101	50.4	-0.09	0.57		106.5	174.8	169.3	67.5	174.0	103	67	67	66		1.001	4.710	502
1090	173.691	175.133		0.16	0.16	1.34	1.08	0.24	77	77	66	1.92	1.40	71	0.014	100	100	50.3	0.13	0.55		107.8	174.4	169.0	65.9	173.6	101	67	67	66		1.001	4.552	491
1091	173.851	175.295		0.16	0.16	1.34	1.07	0.24	77	77	66	1.93	1.40	71	0.015	97	97	50.5	-0.19	0.59		108.5	174.0	168.7	64.8	173.3	100	67	67	66		1.001	4.874	529
1092	174.011	175.457		0.16	0.16	1.33	1.08	0.24	77	77	66	1.93	1.40	71	0.012	108	109	50.5	0.00	0.58		108.9	173.7	168.3	64.1	173.0	100	67	67	66		1.001	4.804	524
1093	174.171	175.619		0.16	0.16	1.34	1.08	0.24	77	77	66	1.93	1.40	72	0.012	108	109	50.5	-0.03	0.52		109.0	173.4	168.1	63.6	172.6	99	67	67	66		1.001	4.297	469
1094	174.332	175.780		0.16	0.16	1.34	1.07	0.24	77	77	66	1.93	1.40	72	0.014	101	100	50.4	0.13	0.55		110.0	173.2	169.9	62.9	172.9	99	67	67	66		1.001	4.553	501
1095	174.492	175.942		0.16	0.16	1.33	1.07	0.24	77	77	66	1.92	1.40	71	0.013	104	104	50.4	-0.04	0.49		110.4	172.9	169.6	62.4	172.7	98	67	67	66		1.001	4.067	449
1096	174.653	176.104		0.16	0.16	1.33	1.08	0.24	77	77	66	1.93	1.40	71	0.013	104	104	50.2	0.19	0.51		110.4	172.8	169.9	62.2	172.6	97	67	67	66		1.001	4.229	467
1097	174.813	176.266		0.16	0.16	1.34	1.07	0.24	77	77	66	1.93	1.40	72	0.012	108	109	50.3	-0.10	0.53		110.3	172.4	169.6	62.0	172.2	97	67	67	66		1.001	4.387	484
1098	174.973	176.427		0.16	0.16	1.34	1.07	0.24	77	77	66	1.92	1.40	71	0.014	100	100	50.4	-0.06	0.45		110.1	172.2	169.4	61.8	172.0	96	67	67	66		1.001	3.745	413
1099	175.133	176.589		0.16	0.16	1.34	1.08	0.24	77	77	66	1.93	1.40	72	0.014	100	101	50.4	-0.01	0.53		110.1	172.0	169.2	61.8	171.9	96	67	67	66		1.001	4.393	484
1100	175.294	176.751		0.16	0.16	1.33	1.07	0.24	77	77	66	1.93	1.40	72	0.014	101	101	50.4	-0.04	0.51		109.8	171.7	168.9	61.7	171.5	96	67	67	66		1.001	4.233	465
1101	175.453	176.913		0.16	0.16	1.33	1.07	0.24	77	77	66	1.92	1.40	72	0.014	99	101	50.4	0.02	0.49		109.6	171.5	168.8	61.7	171.3	95	67	67	66		1.001	4.071	447
1102	175.613	177.074		0.16	0.16	1.34	1.08	0.24	77	77	66	1.93	1.40	72	0.013	104	104	50.4	0.04	0.51		109.4	171.3	168.5	61.7	171.1	94	67	67	66		1.001	4.232	464
1103	175.773	177.236		0.16	0.16	1.33	1.07	0.24	77	77	66	1.93	1.40	71	0.016	94	94	50.3	0.11	0.53		109.2	171.0	168.3	61.7	170.9	94	67	67	66		1.001	4.391	480
1104	175.934	177.398		0.16	0.16	1.33	1.07	0.24	77	77	66	1.93	1.40	71	0.014	101	101	50.3	-0.03	0.53		108.9	170.8	168.0	61.7	170.6	94	67	67	66		1.001	4.397	480
1105	176.094	177.560		0.16	0.16	1.33	1.07	0.24	77	77	66	1.92	1.40	72	0.014	100	101	50.4	-0.05	0.49		108.7	170.5	167.8	61.7	170.4	93	67	67	66		1.001	4.075	444
1106	176.253	177.721		0.16	0.16	1.34	1.07	0.24	77	77	67	1.93	1.40	72	0.015	96	97	50.3	0.07	0.55		108.4	170.3	167.5	61.7	170.1	93	67	68	67		1.001	4.550	494

Elapsed Time	Particulate Sampling Data																	Fuel Weight, lb		Flow, gpm		Temperature Data, oF												
	Gas Meter Cubic Feet (1)	Gas Meter Cubic Feet (2)	Gas Meter Cubic Feet (amb)	Sample Rate, cfm (1)	Sample Rate, cfm (2)	Orifice dH (1)	Orifice dH (2)	Orifice dH (amb)	Meter oF (1)	Meter oF (2)	Meter oF (amb)	Meter Vac. in. Hg. (1)	Meter Vac. in. Hg. (2)	Dilution Tunnel Temp.	Dilution Tunnel dP	Pro. Rate (%) (1)	Pro. Rate (%) (2)	Scale Reading	Weight Change	Load Side Liquid Flow Rate	Boiler Side Liquid Flow Rate (optional)	Thermopile ΔT	Boiler to Heat Exch. Temp.	Heat Exch to Boiler Temp.	Inlet Load Temp.	Outlet Load Temp.	Stack	Filter (1)	Filter (2)	Ambient		Specific Heat of Inlet Water (BTU/lb-°F)	Mass Flow Rate of Inlet Water (lb/min)	Heat Output, Btu
1107	176.414	177.883		0.16	0.16	1.34	1.07	0.24	77	77	66	1.94	1.40	72	0.014	101	101	50.4	-0.14	0.51		108.3	170.0	167.2	61.6	169.9	93	67	67	66		1.001	4.232	459
1108	176.574	178.045		0.16	0.16	1.34	1.07	0.24	77	77	66	1.94	1.40	71	0.014	100	101	50.4	0.02	0.47		108.0	169.8	167.0	61.6	169.6	93	67	67	66		1.001	3.930	425
1109	176.734	178.206		0.16	0.16	1.34	1.07	0.24	77	77	66	1.94	1.40	72	0.014	100	100	50.3	0.10	0.51		107.8	169.5	166.7	61.5	169.3	93	67	67	66		1.001	4.231	457
1110	176.894	178.368		0.16	0.16	1.34	1.07	0.24	77	77	66	1.93	1.40	71	0.014	100	101	50.3	0.03	0.52		107.6	169.2	166.5	61.4	169.1	93	67	67	66		1.001	4.358	470
1111	177.055	178.529		0.16	0.16	1.34	1.07	0.24	77	77	66	1.93	1.40	73	0.014	101	100	50.3	-0.02	0.53		107.5	169.0	166.2	61.3	168.8	92	68	68	66		1.001	4.379	471
1112	177.215	178.692		0.16	0.16	1.34	1.07	0.24	77	77	66	1.94	1.40	76	0.017	91	92	50.4	-0.05	0.51		107.4	168.7	165.9	61.1	168.5	124	68	68	66		1.001	4.236	456
1113	177.375	178.853		0.16	0.16	1.33	1.07	0.24	77	77	67	1.93	1.40	73	0.015	97	97	50.3	0.07	0.51		107.4	168.5	165.7	61.0	168.3	129	68	68	67		1.001	4.233	455
1114	177.535	179.014		0.16	0.16	1.34	1.07	0.24	77	77	67	1.94	1.40	72	0.014	100	100	50.4	-0.08	0.47		107.3	168.4	166.0	60.8	168.1	118	68	68	67		1.001	3.908	420
1115	177.695	179.176		0.16	0.16	1.33	1.07	0.24	77	77	67	1.93	1.40	72	0.014	100	101	50.3	0.03	0.35		107.3	168.4	166.3	60.7	168.0	112	67	68	67		1.001	2.946	316
1116	177.855	179.338		0.16	0.16	1.33	1.07	0.24	78	77	66	1.93	1.40	72	0.014	100	101	50.2	0.10	0.37		107.3	168.3	166.4	60.7	167.9	107	68	68	66		1.001	3.105	333
1117	178.016	179.500		0.16	0.16	1.33	1.07	0.24	77	77	67	1.92	1.40	72	0.013	105	104	50.3	-0.09	0.39		107.1	168.2	165.9	60.6	167.7	104	68	68	67		1.001	3.264	350
1118	178.175	179.661		0.16	0.16	1.33	1.07	0.24	77	77	67	1.94	1.40	72	0.015	96	97	50.3	0.07	0.39		107.0	168.0	165.9	60.6	167.6	101	68	68	67		1.001	3.264	350
1119	178.335	179.822		0.16	0.16	1.33	1.07	0.24	77	77	66	1.92	1.40	71	0.013	104	104	50.2	0.01	0.37		106.7	167.7	165.7	60.7	167.5	100	68	68	66		1.001	3.104	332
1120	178.496	179.985		0.16	0.16	1.33	1.07	0.24	78	77	67	1.94	1.40	71	0.014	100	101	50.2	0.05	0.35		106.5	167.6	165.5	60.8	167.3	98	68	68	67		1.001	2.945	314
1121	178.656	180.146		0.16	0.16	1.33	1.07	0.24	78	77	67	1.92	1.40	71	0.014	100	100	50.2	0.02	0.37		106.3	167.4	165.4	60.8	167.1	97	68	68	67		1.001	3.108	331
1122	178.816	180.307		0.16	0.16	1.33	1.07	0.24	78	77	67	1.94	1.40	72	0.014	100	100	50.2	-0.03	0.39		106.0	167.2	165.2	60.8	166.9	96	68	68	67		1.001	3.271	347
1123	178.976	180.469		0.16	0.16	1.33	1.07	0.24	78	77	67	1.92	1.40	71	0.013	104	104	50.3	-0.13	0.35		105.9	167.1	165.1	60.8	166.7	95	68	68	67		1.001	2.950	313
1124	179.136	180.632		0.16	0.16	1.34	1.07	0.24	78	77	67	1.93	1.40	71	0.013	104	105	50.4	-0.08	0.41		105.7	166.9	165.0	60.8	166.5	94	68	68	67		1.001	3.428	363
1125	179.296	180.793		0.16	0.16	1.34	1.07	0.24	78	77	67	1.94	1.40	71	0.014	100	100	50.2	0.22	0.39		105.6	166.7	164.8	60.8	166.4	94	68	68	67		1.001	3.266	345
1126	179.456	180.954		0.16	0.16	1.34	1.07	0.24	78	77	67	1.93	1.40	72	0.015	97	97	50.3	-0.08	0.35		105.4	166.6	164.6	60.8	166.1	93	68	68	67		1.001	2.946	311
1127	179.617	181.116		0.16	0.16	1.34	1.08	0.24	78	77	67	1.94	1.40	72	0.013	104	104	50.2	0.07	0.37		105.2	166.4	164.5	60.7	166.0	93	68	68	67		1.001	3.103	327
1128	179.777	181.278		0.16	0.16	1.34	1.07	0.24	78	77	67	1.93	1.40	72	0.014	100	101	50.4	-0.17	0.41		105.0	166.2	164.3	60.7	165.8	92	68	68	67		1.001	3.423	360
1129	179.938	181.439		0.16	0.16	1.33	1.07	0.24	78	77	67	1.93	1.40	72	0.012	109	108	50.2	0.15	0.37		104.9	166.0	164.1	60.7	165.7	92	68	68	67		1.001	3.103	326
1130	180.098	181.601		0.16	0.16	1.34	1.07	0.24	78	77	67	1.92	1.40	72	0.013	104	104	50.2	0.03	0.45		104.7	165.8	163.9	60.8	165.4	91	68	68	67		1.001	3.746	393
1131	180.258	181.763		0.16	0.16	1.34	1.07	0.24	78	77	67	1.93	1.40	72	0.014	100	101	50.2	-0.03	0.43		104.6	165.7	163.8	60.8	165.4	91	68	68	67		1.001	3.587	376
1132	180.418	181.925		0.16	0.16	1.34	1.07	0.24	78	77	67	1.94	1.40	72	0.014	100	101	50.2	0.01	0.41		104.3	165.6	163.7	60.9	165.2	91	68	68	67		1.001	3.427	358
1133	180.579	182.086		0.16	0.16	1.33	1.07	0.24	78	77	67	1.92	1.40	72	0.013	104	104	50.3	-0.04	0.41		104.2	165.5	163.6	60.9	165.1	91	68	68	67		1.001	3.400	355
1134	180.739	182.248		0.16	0.16	1.33	1.07	0.24	78	77	67	1.94	1.40	72	0.014	100	101	50.2	0.02	0.38		103.9	165.2	163.4	61.0	164.8	90	68	68	67		1.001	3.171	330
1135	180.899	182.410		0.16	0.16	1.33	1.07	0.24	78	77	67	1.93	1.40	72	0.014	100	101	50.2	-0.01	0.39		103.6	165.0	163.2	61.1	164.6	90	68	68	67		1.001	3.264	338
1136	181.059	182.572		0.16	0.16	1.34	1.07	0.24	78	77	67	1.92	1.40	72	0.014	100	101	50.4	-0.11	0.35		103.3	164.9	163.1	61.1	164.5	90	68	68	67		1.001	2.945	305
1137	181.219	182.733		0.16	0.16	1.33	1.07	0.24	78	77	67	1.92	1.40	72	0.015	97	97	50.2	0.14	0.41		103.1	164.7	162.9	61.2	164.4	89	68	68	67		1.001	3.389	350
1138	181.379	182.895		0.16	0.16	1.33	1.07	0.24	78	77	67	1.93	1.40	72	0.014	100	101	50.2	0.04	0.39		102.9	164.5	162.7	61.4	164.2	89	68	68	67		1.001	3.264	336
1139	181.539	183.057		0.16	0.16	1.34	1.07	0.24	78	77	67	1.94	1.40	72	0.013	104	104	50.1	0.09	0.37		102.5	164.5	162.8	61.5	164.0	89	68	68	67		1.001	3.123	321
1140	181.699	183.219		0.16	0.16	1.34	1.07	0.24	78	77	67	1.93	1.40	72	0.013	104	104	50.3	-0.16	0.39		102.3	164.3	162.5	61.6	163.8	89	68	68	67		1.001	3.268	335
1141	181.860	183.380		0.16	0.16	1.34	1.07	0.24	78	77	67	1.93	1.40	72	0.013	104	104	50.3	-0.03	0.39		102.2	164.1	162.3	61.7	163.9	89	68	68	67		1.001	3.264	334
1142	182.020	183.542		0.16	0.16	1.33	1.07	0.24	78	77	67	1.94	1.40	72	0.012	108	109	50.2	0.07	0.35		101.9	164.0	162.1	61.8	163.7	88	68	68	67		1.001	2.944	300
1143	182.180	183.704		0.16	0.16	1.33	1.06	0.24	78	77	67	1.93	1.40	75	0.014	100	101	50.3	-0.02	0.39		101.7	163.7	161.9	61.8	163.5	116	68	68	67		1.001	3.266	332
1144	182.341	183.865		0.16	0.16	1.34	1.06	0.24	78	77	67	1.92	1.40	75	0.014	101	100	50.2	0.08	0.39		101.3	163.5	161.7	61.9	163.2	130	68	68	67		1.001	3.264	331
1145	182.501	184.026		0.16	0.16	1.33	1.07	0.24	78	77	67	1.94	1.40	73	0.014	100	100	50.2	-0.03	0.33		101.1	163.4	161.5	62.0	163.1	120	68	68	67		1.001	2.765	282
1146	182.662	184.188		0.16	0.16	1.34	1.07	0.24	78	77	67	1.93	1.40	72	0.012	109	109	50.0	0.25	0.37		100.9	163.3	161.4	62.0	162.9	111	68	68	67		1.001	3.107	314
1147	182.822	184.351		0.16	0.16	1.34	1.07	0.24	78	77	67	1.92	1.40	72	0.013	104	105	50.2	-0.21	0.41		100.8	163.1	161.3	62.1	162.8	105	68	68	67		1.001	3.425	346
1148	182.982	184.512		0.16	0.16	1.34	1.07	0.24	78	77	67	1.92	1.40	72	0.014	100	100	50.1	0.10	0.37		100.4	162.9	161.1	62.1	162.5	101	68	68	67		1.001	3.104	312
1149	183.142	184.673		0.16	0.16	1.34	1.07	0.24	78	78	67	1.94	1.40	72	0.015	97	96	50.2	-0.10	0.39		100.3	162.7	160.8	62.1	162.4	99	68	68	67		1.001	3.264	328
1150	183.303	184.835		0.16	0.16	1.33	1.07	0.24	78	77	67	1.93	1.40	72	0.013	104	104	50.0	0.14	0.37		99.9	162.5	160.7	62.1	162.0	97	68	68	67		1.001	3.105	311
1151	183.463	184.998		0.16	0.16	1.33	1.07	0.24	78	77	67	1.92	1.40	72	0.012	108	109	50.1	-0.07	0.39		99.8	162.3	160.5	62.2	162.0	95	68	68	67		1.001	3.266	326
1152	183.623	185.158		0.16	0.16	1.33	1.07	0.24	78	77	67	1.93	1.40	76	0.015	97	96	49.9	0.18	0.37		99.7	162.2	160.4	62.2	161.9	125	68	68	67		1.001	3.107	310
1153	183.783	185.320		0.16	0.16	1.33	1.07	0.24	78	78	67	1.94	1.40	78	0.015	97	98	49.7	0.23	0.39		99.5	162.1	160.3	62.3	161.7	143	68	68	67		1.001	3.263	325
1154	183.943	185.481		0.16	0.16	1.34	1.07	0.24	78	78	67	1.92	1.40	78	0.014	100	100	49.7	0.02	0.37		99.3	161.9	160.1	62.3	161.6	155	68	68	67		1.001	3.105	309
1155	184.103	185.644		0.16	0.16	1.33	1.07	0.24	78	78	67	1.94	1.40	79	0.014	101	102	49.4	0.25	0.39		99.1	161.8	160.0	62.3	161.4	167	68	69	67		1.001	3.265	324
1156	184.263	185.804		0.16	0.16	1.33	1.07	0.24	78	78	67	1.93	1.40	81	0.014	101	100	49.4	0.07	0.37		99.0	161.8	160.0	62.4	161.4	178	69	69	67		1.001	3.107	308
1157	184.423	185.966		0.16	0.16	1.34	1.07	0.24	78	78	67	1.93	1.40	84	0.015	98	98	48.9	0.43	0.41		99.1	161.9	160.1	62.4	161.5	192	69	69	67		1.001	3.424	340
1158	184.583	186.127		0.16	0.16	1.33	1.07	0.24	78	78	67	1.94	1.40	86	0.013	105	105	48.8	0.15	0.37		99.1	162.1	160.3	62.5	161.6	205	69	69	67		1.001	3.105	308
1159	184.743	186.289		0.16	0.16	1.33	1.07	0.24	78	78	67	1.93	1.40	87	0.014	101	102	48.5	0.30	0.41		99.2	162.3	160.4	62.5	161.6	215	69	69	67		1.001	3.418	339
1160	184.903	186.450		0.16	0.16	1.34	1.07	0.24	78	78	67	1.94	1.40	88	0.014	101	101	48.1	0.35	0.37		99.6	162.6	160.7	62.5	162.1	224	69	70	67		1.001	3.099	309
1161	185.063	186.611		0.16	0.16	1.34	1.07	0.24	78	78	67	1.94	1.40	89	0.013	105	105	47.9	0.21	0.30		99.8	162.9	161.1	62.5	162.4	233	70	70	67		1.001	2.479	248
1162	185.224	186.773		0.16	0.16	1.34	1.07	0.24	78	78	67	1.93	1.40	91	0.013	106	106	47.6	0.33	0.41		100.2	163.4	161.4	62.5	162.7	242	70	70	67		1.001	3.432	344
1163	185.384	186.934		0.16	0.16	1.32	1.06	0.24	78	78	67	1.93	1.40	92	0.014	102	102	47.1	0.49	0.33		100.7	164.1	162.1	62.5	163.2	251	70	70	67		1.001	2.765	281
1164	185.544	187.095		0.16	0.16	1.33	1.07	0.24	78	78	67	1.94	1.40	93	0.014	102	102	46.9	0.25	0.38		101.5	164.7	162.7	62.5	163.9	259	70	71	67		1.001	3.179	323
1165	185.703	187.256		0.16	0.16	1.33	1.07	0.24	78	78	67	1.94	1.40	94	0.014	101	102	46.6	0.28	0.39		102.2	165.4	163.5	62.4	164.6	268	71	71	67		1.001	3.252	333
1166	185.863	187.417		0.16	0.16	1.33	1.07	0.24	78	78	67	1.94	1.40	95	0.018	90	90	46.1	0.47	0.42		103.0	166.2	164.2	62.4	165.4	275	71	71	67		1.001	3.502	361
1167	186.022	187.577		0.16	0.16	1.33	1.07	0.24	78	78	67	1.94	1.40	96	0.013	105	105	45.7	0.40	0.41		103.8	167.1	165.1	62.3	166.1	282	71	71	67		1.001	3.421	355
1168	186.182	187.738		0.16	0.16	1.33	1.07	0.24	78	78	67	1.95	1.40	97	0.014	102	102	45.3	0.40	0.39		104.8	168.0	166.0	62.3	167.1	289	71	72	67		1.001	3.262	342

Elapsed Time	Particulate Sampling Data																	Fuel Weight, lb		Flow, gpm		Temperature Data, oF												
	Gas Meter Cubic Feet (1)	Gas Meter Cubic Feet (2)	Gas Meter Cubic Feet (amb)	Sample Rate, cfm (1)	Sample Rate, cfm (2)	Orifice dH (1)	Orifice dH (2)	Orifice dH (amb)	Meter oF (1)	Meter oF (2)	Meter oF (amb)	Meter Vac. in. Hg. (1)	Meter Vac. in. Hg. (2)	Dilution Tunnel Temp.	Dilution Tunnel dP	Pro. Rate (%) (1)	Pro. Rate (%) (2)	Scale Reading	Weight Change	Load Side Liquid Flow Rate	Boiler Side Liquid Flow Rate (optional)	Thermopile ΔT	Boiler to Heat Exch. Temp.	Heat Exch to Boiler Temp.	Inlet Load Temp.	Outlet Load Temp.	Stack	Filter (1)	Filter (2)	Ambient		Specific Heat of Inlet Water (BTU/lb-°F)	Mass Flow Rate of Inlet Water (lb/min)	Heat Output, Btu
1169	186.342	187.900		0.16	0.16	1.33	1.06	0.24	78	78	67	1.94	1.40	98	0.012	110	111	45.1	0.24	0.39		105.8	169.2	167.2	62.2	168.0	296	71	72	67		1.001	3.260	345
1170	186.501	188.060		0.16	0.16	1.33	1.06	0.24	78	78	67	1.95	1.40	99	0.014	102	102	44.5	0.52	0.43		107.0	170.2	168.1	62.1	169.1	302	72	72	67		1.001	3.580	384
1171	186.661	188.220		0.16	0.16	1.33	1.07	0.24	78	78	67	1.94	1.40	100	0.013	106	106	44.2	0.31	0.37		108.2	171.2	169.1	62.0	170.2	308	72	73	67		1.001	3.102	336
1172	186.820	188.381		0.16	0.16	1.33	1.07	0.24	78	78	67	1.97	1.40	101	0.013	106	106	43.6	0.60	0.37		109.3	172.3	170.2	61.9	171.3	313	72	73	67		1.001	3.105	340
1173	186.980	188.542		0.16	0.16	1.33	1.06	0.24	78	78	67	1.97	1.40	102	0.014	103	103	43.2	0.41	0.41		110.2	173.3	171.2	61.9	172.1	318	72	73	67		1.001	3.422	378
1174	187.140	188.702		0.16	0.16	1.33	1.06	0.24	78	78	67	1.96	1.40	103	0.012	111	110	42.8	0.45	0.41		111.5	174.7	172.5	61.9	173.4	322	73	73	67		1.001	3.421	382
1175	187.299	188.862		0.16	0.16	1.33	1.06	0.24	78	78	67	1.97	1.40	104	0.014	102	102	42.3	0.51	0.43		112.9	175.9	173.8	61.9	174.8	326	73	73	67		1.001	3.585	405
1176	187.458	189.023		0.16	0.16	1.33	1.06	0.24	78	78	67	1.97	1.40	104	0.014	102	103	42.0	0.27	0.39		113.9	177.0	174.9	61.9	175.8	328	73	74	67		1.001	3.261	372
1177	187.618	189.183		0.16	0.16	1.32	1.06	0.24	78	78	67	1.98	1.40	105	0.014	103	102	41.3	0.69	0.41		115.1	178.2	176.0	62.0	177.1	331	73	74	67		1.001	3.422	394
1178	187.777	189.343		0.16	0.16	1.33	1.06	0.24	78	78	67	1.96	1.40	105	0.013	106	106	40.9	0.43	0.35		116.2	179.5	177.3	62.0	178.3	333	73	74	67		1.001	2.941	342
1179	187.936	189.504		0.16	0.16	1.32	1.06	0.24	78	78	67	1.97	1.40	106	0.013	106	107	40.6	0.31	0.39		117.4	180.7	178.5	62.1	179.5	337	74	74	67		1.001	3.261	383
1180	188.095	189.664		0.16	0.16	1.32	1.06	0.24	78	78	67	1.96	1.40	106	0.013	106	106	40.2	0.39	0.39		118.6	182.0	179.7	62.2	180.8	339	74	74	67		1.001	3.257	387
1181	188.254	189.824		0.16	0.16	1.34	1.07	0.24	78	78	67	1.96	1.40	99	0.016	95	95	39.9	0.32	0.41		119.7	183.3	180.9	62.3	182.0	340	73	74	67		1.001	3.420	410
1182	188.414	189.986		0.16	0.16	1.33	1.06	0.24	78	78	67	1.97	1.40	87	0.015	98	98	39.5	0.37	0.37		120.8	184.3	182.0	62.4	183.2	307	73	74	67		1.001	3.098	375
1183	188.574	190.146		0.16	0.16	1.33	1.06	0.24	78	78	67	1.96	1.40	84	0.015	98	97	39.4	0.10	0.33		121.4	184.9	183.0	62.5	183.9	285	73	73	67		1.001	2.780	338
1184	188.734	190.306		0.16	0.16	1.32	1.06	0.24	78	78	67	1.97	1.40	81	0.011	114	113	39.4	0.03	0.29		121.8	185.6	183.8	62.6	184.4	271	72	73	67		1.001	2.454	299
1185	188.894	190.468		0.16	0.16	1.32	1.06	0.24	78	78	67	1.95	1.40	80	0.014	101	101	39.2	0.16	0.31		122.3	186.1	184.3	62.7	185.1	260	72	73	67		1.001	2.621	321
1186	189.054	190.629		0.16	0.16	1.32	1.06	0.24	78	78	67	1.96	1.40	79	0.014	101	100	39.2	0.05	0.33		122.7	186.4	184.6	62.8	185.5	250	72	72	67		1.001	2.776	341
1187	189.214	190.789		0.16	0.16	1.33	1.06	0.24	78	78	67	1.97	1.40	78	0.014	100	100	39.1	0.09	0.33		122.8	186.6	184.8	62.9	185.8	242	72	72	67		1.001	2.776	341
1188	189.373	190.950		0.16	0.16	1.32	1.06	0.24	78	78	67	1.95	1.40	78	0.013	104	104	39.1	-0.01	0.32		122.8	186.9	185.1	63.1	185.9	235	72	72	67		1.001	2.625	323
1189	189.533	191.112		0.16	0.16	1.32	1.06	0.24	78	78	68	1.96	1.40	77	0.015	97	97	39.1	-0.01	0.35		122.9	187.0	185.2	63.2	186.1	229	72	72	68		1.001	2.937	361
1190	189.692	191.272		0.16	0.16	1.32	1.06	0.24	78	78	67	1.97	1.40	77	0.015	96	96	39.1	0.01	0.31		123.0	187.2	185.3	63.4	186.4	224	72	72	67		1.001	2.620	323
1191	189.852	191.432		0.16	0.16	1.32	1.06	0.24	78	78	68	1.95	1.40	77	0.013	104	103	39.0	0.08	0.33		122.8	187.3	185.3	63.7	186.4	219	72	72	68		1.001	2.775	341
1192	190.011	191.594		0.16	0.16	1.32	1.06	0.24	78	78	67	1.96	1.40	76	0.014	100	101	38.9	0.10	0.29		122.7	187.4	185.2	63.8	186.6	214	71	72	67		1.001	2.443	300
1193	190.171	191.755		0.16	0.16	1.32	1.06	0.24	78	78	68	1.94	1.40	76	0.013	104	104	39.0	-0.14	0.31		122.7	187.5	185.3	64.0	186.7	210	71	72	68		1.001	2.619	322
1194	190.331	191.915		0.16	0.16	1.32	1.05	0.24	78	78	67	1.94	1.40	75	0.013	104	103	38.8	0.19	0.30		122.7	187.5	185.2	64.1	186.7	206	71	71	67		1.001	2.460	302
1195	190.490	192.076		0.16	0.16	1.33	1.06	0.24	78	78	68	1.94	1.40	74	0.015	96	97	39.0	-0.11	0.31		122.5	187.5	185.0	64.2	186.7	203	71	71	68		1.001	2.616	321
1196	190.650	192.238		0.16	0.16	1.33	1.06	0.24	78	78	67	1.94	1.40	74	0.013	104	104	38.9	0.03	0.30		122.4	187.5	184.9	64.3	186.7	198	71	71	67		1.001	2.459	301
1197	190.810	192.398		0.16	0.16	1.33	1.06	0.24	78	78	67	1.94	1.40	74	0.014	100	99	38.9	-0.01	0.31		122.3	187.5	184.7	64.5	186.9	195	71	71	67		1.001	2.620	321
1198	190.970	192.559		0.16	0.16	1.32	1.06	0.24	79	78	68	1.95	1.40	74	0.014	100	100	38.9	0.06	0.33		122.2	187.5	184.6	64.6	186.8	192	71	71	68		1.001	2.780	340
1199	191.130	192.720		0.16	0.16	1.33	1.06	0.24	78	78	68	1.95	1.40	74	0.013	104	104	38.9	-0.04	0.30		122.1	187.5	184.5	64.7	186.8	188	71	71	68		1.001	2.459	301
1200	191.290	192.881		0.16	0.16	1.32	1.05	0.24	78	78	68	1.96	1.40	74	0.014	100	100	39.0	-0.05	0.31		120.6	187.5	184.3	66.0	186.5	184	70	71	68		1.001	2.619	316
1201	191.450	193.042		0.16	0.16	1.32	1.06	0.24	78	78	68	1.94	1.40	74	0.014	100	100	39.0	0.00	0.31		118.1	187.5	184.1	68.7	186.8	180	70	70	68		1.001	2.616	309
1202	191.609	193.202		0.16	0.16	1.32	1.06	0.24	79	78	68	1.95	1.40	74	0.012	107	107	38.9	0.03	0.33		116.7	187.5	184.1	69.9	186.5	177	70	70	68		1.001	2.774	324
1203	191.769	193.364		0.16	0.16	1.32	1.06	0.24	79	78	68	1.96	1.40	74	0.012	108	109	38.9	0.05	0.30		115.8	187.5	184.1	70.6	186.5	174	70	70	68		1.001	2.459	285
1204	191.928	193.524		0.16	0.16	1.31	1.05	0.24	79	78	68	1.96	1.40	74	0.011	112	112	39.0	-0.08	0.30		115.2	187.4	184.0	71.1	186.3	171	70	70	68		1.001	2.460	284
1205	192.088	193.685		0.16	0.16	1.33	1.06	0.24	79	78	68	1.94	1.40	74	0.016	93	94	39.0	-0.03	0.30		115.2	187.4	184.0	71.2	186.4	168	70	70	68		1.001	2.462	284
1206	192.247	193.847		0.16	0.16	1.32	1.06	0.24	79	78	68	1.96	1.40	73	0.013	103	104	39.1	-0.07	0.32		115.2	187.3	184.0	71.3	186.4	165	70	70	68		1.001	2.622	302
1207	192.408	194.007		0.16	0.16	1.32	1.06	0.24	79	78	68	1.94	1.40	74	0.015	97	96	38.9	0.12	0.31		115.2	187.3	183.9	71.2	186.3	163	70	70	68		1.001	2.619	302
1208	192.567	194.168		0.16	0.16	1.33	1.06	0.24	79	78	68	1.95	1.40	73	0.015	96	97	38.9	0.07	0.34		115.6	187.3	183.9	70.5	186.2	160	70	70	68		1.001	2.827	327
1209	192.727	194.329		0.16	0.16	1.32	1.06	0.24	79	78	68	1.95	1.40	73	0.011	113	113	39.0	-0.10	0.32		115.2	187.2	183.9	71.0	186.2	158	70	70	68		1.001	2.688	310
1210	192.887	194.491		0.16	0.16	1.32	1.06	0.24	79	78	68	1.96	1.40	74	0.015	97	97	38.9	0.07	0.33		115.6	187.2	183.9	70.8	186.3	156	70	70	68		1.001	2.724	315
1211	193.047	194.651		0.16	0.16	1.32	1.06	0.24	79	78	68	1.96	1.40	73	0.015	96	96	38.9	0.02	0.32		115.2	187.2	183.9	70.8	186.0	153	70	70	68		1.001	2.669	308
1212	193.207	194.812		0.16	0.16	1.32	1.06	0.24	79	78	68	1.95	1.40	73	0.015	96	97	39.0	-0.11	0.31		114.2	187.1	183.8	71.7	186.0	151	70	70	68		1.001	2.610	299
1213	193.367	194.974		0.16	0.16	1.32	1.06	0.24	79	78	68	1.96	1.40	73	0.013	104	104	38.8	0.16	0.31		114.5	187.0	183.7	71.5	186.0	149	69	70	68		1.001	2.592	297
1214	193.527	195.134		0.16	0.16	1.32	1.06	0.24	79	78	68	1.95	1.40	73	0.014	100	99	38.9	-0.09	0.35		115.0	186.9	183.6	71.0	186.0	147	69	70	68		1.001	2.934	338
1215	193.687	195.295		0.16	0.16	1.32	1.06	0.24	79	78	68	1.96	1.40	73	0.014	100	100	38.9	0.03	0.30		115.2	186.9	183.5	70.7	185.8	145	69	70	68		1.001	2.457	283
1216	193.846	195.456		0.16	0.16	1.32	1.06	0.24	79	78	68	1.96	1.40	73	0.013	103	104	38.9	0.04	0.31		114.9	186.8	183.5	70.9	185.8	143	69	70	68		1.001	2.619	301
1217	194.006	195.617		0.16	0.16	1.31	1.06	0.24	79	78	68	1.95	1.40	74	0.014	100	100	38.9	-0.03	0.35		114.4	186.8	183.4	71.3	185.8	142	69	70	68		1.001	2.933	336
1218	194.165	195.778		0.16	0.16	1.32	1.06	0.24	79	78	68	1.95	1.40	73	0.015	96	97	38.8	0.07	0.30		115.1	186.7	183.3	70.6	185.7	140	69	70	68		1.001	2.459	283
1219	194.325	195.939		0.16	0.16	1.32	1.06	0.24	79	78	68	1.95	1.40	73	0.013	104	104	39.0	-0.15	0.33		114.8	186.6	183.2	70.7	185.5	138	69	69	68		1.001	2.775	319
1220	194.485	196.100		0.16	0.16	1.33	1.06	0.24	79	78	68	1.95	1.40	73	0.015	96	97	39.0	-0.02	0.30		115.1	186.5	183.2	70.4	185.5	136	69	69	68		1.001	2.458	283
1221	194.644	196.261		0.16	0.16	1.33	1.05	0.24	79	78	68	1.94	1.40	73	0.014	99	100	38.9	0.10	0.33		114.3	186.5	183.2	71.1	185.3	135	69	69	68		1.001	2.777	318
1222	194.804	196.421		0.16	0.16	1.32	1.06	0.24	79	79	68	1.95	1.40	73	0.014	100	99	38.9	-0.07	0.33		114.6	186.4	183.1	70.9	185.4	134	69	69	68		1.001	2.770	318
1223	194.965	196.583		0.16	0.16	1.33	1.06	0.24	79	79	68	1.97	1.40	74	0.015	97	97	38.8	0.14	0.31		114.3	186.3	183.0	71.1	185.4	132	69	69	68		1.001	2.615	299
1224	195.124	196.743		0.16	0.16	1.31	1.05	0.24	79	79	68	1.97	1.40	83	0.013	104	104	38.6	0.25	0.29		114.1	186.1	182.8	71.1	185.2	167	70	71	68		1.001	2.454	280
1225	195.284	196.904		0.16	0.16	1.32	1.06	0.24	79	79	68	1.95	1.40	78	0.013	104	104	38.6	-0.02	0.35		113.6	185.9	182.7	71.3	185.0	180	69	69	68		1.001	2.931	333
1226	195.444	197.065		0.16	0.16	1.33	1.07	0.24	79	79	68	1.96	1.40	74	0.012	108	108	38.7	-0.14	0.28		113.4	185.8	182.5	71.6	185.0	163	69	69	68		1.001	2.341	266
1227	195.604	197.227		0.16	0.16	1.33	1.06	0.24	79	79	68	1.95	1.40	74	0.014	100	100	38.5	0.17	0.34		113.9	185.7	182.4	70.9	184.8	153	69	69	68		1.001	2.841	324
1228	195.764	197.387		0.16	0.16	1.32	1.06	0.24	79	79	68	1.95	1.40	73	0.013	104	103	38.6	-0.01	0.33		113.5	185.6	182.3	71.0	184.6	146	69	69	68		1.001	2.778	316
1229	195.923	197.548		0.16	0.16	1.32	1.07	0.24	79	79	68	1.94	1.40	73	0.015	96	96	38.6	-0.03	0.30		114.1	185.5	182.2	70.6	184.7	142	69	69	68		1.001	2.509	287
1230	196.083	197.710		0.16	0.16	1.32	1.07	0.24	79	79	68	1.94	1.40	73	0.014	100	100	38.6	0.00	0.36		113.0	185.5	182.3	71.5	184.5	138	69	69	68		1.001	2.966	335

Elapsed Time	Particulate Sampling Data																	Fuel Weight, lb		Flow, gpm		Temperature Data, oF												
	Gas Meter Cubic Feet (1)	Gas Meter Cubic Feet (2)	Gas Meter Cubic Feet (amb)	Sample Rate, cfm (1)	Sample Rate, cfm (2)	Orifice dH (1)	Orifice dH (2)	Orifice dH (amb)	Meter oF (1)	Meter oF (2)	Meter oF (amb)	Meter Vac. in. Hg. (1)	Meter Vac. in. Hg. (2)	Dilution Tunnel Temp.	Dilution Tunnel dP	Pro. Rate (%) (1)	Pro. Rate (%) (2)	Scale Reading	Weight Change	Load Side Liquid Flow Rate	Boiler Side Liquid Flow Rate (optional)	Thermopile ΔT	Boiler to Heat Exch. Temp.	Heat Exch to Boiler Temp.	Inlet Load Temp.	Outlet Load Temp.	Stack	Filter (1)	Filter (2)	Ambient		Specific Heat of Inlet Water (BTU/lb-°F)	Mass Flow Rate of Inlet Water (lb/min)	Heat Output, Btu
1231	196.244	197.871		0.16	0.16	1.32	1.06	0.24	79	79	68	1.96	1.40	73	0.014	100	100	38.7	-0.09	0.31		112.4	185.4	182.1	72.0	184.4	136	69	69	68		1.001	2.577	290
1232	196.403	198.032		0.16	0.16	1.32	1.06	0.24	79	79	68	1.95	1.40	73	0.015	96	96	38.5	0.20	0.35		113.2	185.4	182.0	71.2	184.3	133	69	69	68		1.001	2.934	332
1233	196.563	198.193		0.16	0.16	1.33	1.07	0.24	79	79	68	1.94	1.40	73	0.014	100	100	38.5	-0.08	0.28		113.3	185.2	182.1	71.0	184.3	131	69	69	68		1.001	2.303	261
1234	196.723	198.355		0.16	0.16	1.33	1.06	0.24	79	79	68	1.95	1.40	73	0.014	100	100	38.6	-0.04	0.33		112.6	185.2	181.9	71.4	184.0	130	69	69	68		1.001	2.774	313
1235	196.883	198.516		0.16	0.16	1.33	1.06	0.24	79	79	68	1.95	1.40	73	0.013	104	103	38.5	0.06	0.30		112.9	185.1	181.8	71.1	184.0	128	69	69	68		1.001	2.458	278
1236	197.043	198.677		0.16	0.16	1.33	1.06	0.24	79	79	68	1.95	1.40	73	0.014	100	100	38.6	-0.04	0.31		113.3	185.0	181.7	70.9	184.2	127	69	69	68		1.001	2.613	296
1237	197.204	198.838		0.16	0.16	1.33	1.06	0.24	79	79	68	1.94	1.40	73	0.014	100	100	38.7	-0.08	0.33		112.6	184.9	181.6	71.2	183.9	125	69	69	68		1.001	2.772	313
1238	197.364	199.001		0.16	0.16	1.33	1.06	0.24	79	79	68	1.95	1.40	73	0.012	108	109	38.6	0.03	0.31		112.9	184.8	181.5	71.0	183.9	124	69	69	68		1.001	2.616	296
1239	197.524	199.161		0.16	0.16	1.33	1.06	0.24	79	79	68	1.95	1.40	73	0.013	104	103	38.6	0.02	0.30		112.9	184.7	181.4	70.8	183.7	123	69	69	68		1.001	2.457	278
1240	197.685	199.322		0.16	0.16	1.32	1.06	0.24	79	79	68	1.94	1.40	73	0.013	104	103	38.5	0.08	0.30		112.5	184.6	181.3	71.0	183.5	122	69	69	68		1.001	2.461	277
1241	197.844	199.484		0.16	0.16	1.32	1.06	0.24	79	79	68	1.94	1.40	73	0.015	96	97	38.6	-0.10	0.33		112.6	184.4	181.1	70.8	183.3	121	69	69	68		1.001	2.776	313
1242	198.005	199.645		0.16	0.16	1.32	1.06	0.24	79	79	68	1.94	1.40	73	0.013	104	103	38.5	0.06	0.33		112.6	184.3	181.1	70.6	183.3	119	69	69	68		1.001	2.777	313
1243	198.165	199.806		0.16	0.16	1.32	1.06	0.24	79	79	68	1.94	1.40	73	0.016	93	93	38.6	-0.06	0.31		112.8	184.2	181.1	70.5	183.3	119	69	69	68		1.001	2.614	295
1244	198.325	199.968		0.16	0.16	1.32	1.06	0.24	79	79	68	1.94	1.40	73	0.014	100	100	38.6	-0.01	0.30		112.6	184.1	180.8	70.5	183.1	117	69	69	68		1.001	2.459	277
1245	198.484	200.130		0.16	0.16	1.32	1.06	0.24	79	79	68	1.95	1.40	73	0.013	103	104	38.5	0.12	0.30		112.8	184.0	180.8	70.3	183.1	116	69	69	68		1.001	2.460	278
1246	198.645	200.290		0.16	0.16	1.32	1.06	0.24	79	79	68	1.94	1.40	73	0.012	108	107	38.5	-0.05	0.37		111.6	183.9	180.7	71.2	182.8	115	69	69	68		1.001	3.091	345
1247	198.805	200.451		0.16	0.16	1.33	1.06	0.24	79	79	68	1.95	1.40	73	0.013	104	103	38.6	-0.09	0.45		111.7	183.8	179.3	71.0	182.7	114	69	69	68		1.001	3.781	423
1248	198.964	200.613		0.16	0.16	1.32	1.07	0.24	79	79	68	1.93	1.40	73	0.014	99	100	38.6	0.00	0.48		115.5	183.4	179.1	67.4	182.9	113	69	69	68		1.001	4.010	464
1249	199.125	200.775		0.16	0.16	1.33	1.06	0.24	79	79	68	1.94	1.40	73	0.014	100	100	38.6	0.02	0.49		117.0	183.0	178.8	65.6	182.6	112	69	69	68		1.001	4.063	476
1250	199.285	200.935		0.16	0.16	1.33	1.07	0.24	79	79	68	1.94	1.40	73	0.014	100	99	38.5	0.07	0.49		117.4	182.7	178.6	64.8	182.2	112	69	69	68		1.001	4.060	477
1251	199.445	201.097		0.16	0.16	1.33	1.07	0.24	79	79	68	1.95	1.40	73	0.015	96	97	38.7	-0.14	0.51		117.5	182.5	178.3	64.4	181.9	111	69	69	68		1.001	4.223	497
1252	199.605	201.258		0.16	0.16	1.33	1.06	0.24	79	79	68	1.95	1.40	73	0.014	100	100	38.6	0.10	0.49		117.4	182.2	178.0	64.3	181.7	110	69	69	68		1.001	4.062	478
1253	199.766	201.420		0.16	0.16	1.33	1.06	0.24	79	79	68	1.95	1.40	73	0.015	97	97	38.6	0.01	0.47		117.3	181.9	177.6	64.2	181.5	110	69	69	68		1.001	3.898	458
1254	199.926	201.581		0.16	0.16	1.32	1.06	0.24	79	79	68	1.95	1.40	73	0.015	96	96	38.5	0.07	0.51		117.0	181.7	177.4	64.1	181.2	109	69	69	68		1.001	4.223	495
1255	200.087	201.742		0.16	0.16	1.32	1.06	0.24	79	79	68	1.96	1.40	76	0.014	101	100	38.5	-0.02	0.49		116.8	181.5	177.1	64.0	180.8	120	69	69	68		1.001	4.065	475
1256	200.246	201.904		0.16	0.16	1.32	1.06	0.24	79	79	68	1.94	1.40	79	0.014	100	101	38.6	-0.10	0.51		116.8	181.3	176.8	63.9	180.7	149	69	69	68		1.001	4.226	494
1257	200.406	202.064		0.16	0.16	1.33	1.06	0.24	79	79	68	1.96	1.40	74	0.015	97	96	38.4	0.22	0.51		116.6	180.9	176.5	63.8	180.3	144	69	69	68		1.001	4.226	493
1258	200.566	202.225		0.16	0.16	1.32	1.07	0.24	79	79	68	1.93	1.40	73	0.016	93	93	38.5	-0.05	0.49		116.6	180.8	176.3	63.6	180.1	132	69	69	68		1.001	4.061	474
1259	200.727	202.387		0.16	0.16	1.32	1.07	0.24	79	79	68	1.95	1.40	73	0.015	97	97	38.5	-0.06	0.47		116.3	180.5	176.0	63.4	179.8	125	69	69	68		1.001	3.903	455
1260	200.887	202.549		0.16	0.16	1.32	1.06	0.24	79	79	68	1.95	1.40	73	0.014	100	100	38.5	0.01	0.47		117.1	180.4	177.4	62.9	180.0	120	69	69	68		1.001	3.901	457
1261	201.046	202.709		0.16	0.16	1.32	1.06	0.24	79	79	68	1.95	1.40	73	0.013	103	103	38.5	0.02	0.49		117.5	180.2	177.1	62.3	179.8	117	69	69	68		1.001	4.059	477
1262	201.207	202.871		0.16	0.16	1.33	1.07	0.24	79	79	68	1.94	1.40	73	0.012	108	108	38.5	-0.01	0.45		117.6	179.8	176.7	62.0	179.6	114	69	69	68		1.001	3.743	441
1263	201.367	203.033		0.16	0.16	1.32	1.06	0.24	79	79	67	1.95	1.40	73	0.015	96	97	38.5	-0.04	0.49		117.6	179.6	176.5	61.7	179.3	112	69	69	67		1.001	4.063	478
1264	201.527	203.194		0.16	0.16	1.32	1.06	0.24	79	79	68	1.94	1.40	73	0.016	93	93	38.4	0.13	0.30		117.5	179.4	176.8	61.5	179.1	111	69	69	68		1.001	2.464	290
1265	201.687	203.355		0.16	0.16	1.33	1.06	0.24	79	79	68	1.93	1.40	73	0.014	100	100	38.5	-0.13	0.30		117.1	179.6	177.4	61.5	178.7	109	69	69	68		1.001	2.468	289
1266	201.847	203.516		0.16	0.16	1.33	1.06	0.24	79	79	68	1.95	1.40	73	0.011	113	113	38.4	0.10	0.28		117.3	179.6	177.6	61.8	179.1	109	69	69	68		1.001	2.303	270
1267	202.007	203.678		0.16	0.16	1.32	1.06	0.24	79	79	68	1.93	1.40	73	0.014	100	100	38.3	0.15	0.30		115.1	179.5	176.3	63.5	178.6	108	69	69	68		1.001	2.461	284
1268	202.167	203.839		0.16	0.16	1.33	1.06	0.24	79	79	68	1.94	1.40	73	0.014	100	100	38.5	-0.24	0.42		113.1	179.3	175.4	65.6	178.6	107	69	69	68		1.001	3.457	391
1269	202.327	203.999		0.16	0.16	1.33	1.06	0.24	79	79	68	1.95	1.40	73	0.012	108	107	38.5	0.07	0.45		114.6	179.0	175.4	63.9	178.5	106	69	69	68		1.001	3.735	428
1270	202.488	204.161		0.16	0.16	1.33	1.07	0.24	79	79	68	1.94	1.40	73	0.013	104	104	38.3	0.12	0.43		115.4	178.8	176.5	63.0	178.4	105	69	69	68		1.001	3.566	412
1271	202.648	204.323		0.16	0.16	1.33	1.06	0.24	79	79	68	1.95	1.40	73	0.014	100	100	38.4	-0.10	0.39		116.0	178.6	176.2	62.3	178.3	105	69	69	68		1.001	3.270	380
1272	202.808	204.484		0.16	0.16	1.33	1.07	0.24	79	79	68	1.95	1.40	73	0.015	96	96	38.5	-0.02	0.39		116.1	178.4	176.1	62.1	178.1	104	69	69	68		1.001	3.256	378
1273	202.968	204.645		0.16	0.16	1.32	1.06	0.24	79	79	68	1.95	1.40	73	0.013	104	103	38.5	-0.02	0.39		115.9	178.2	175.9	62.0	177.9	103	69	69	68		1.001	3.259	378
1274	203.128	204.807		0.16	0.16	1.32	1.07	0.24	79	79	68	1.94	1.40	73	0.013	104	104	38.4	0.12	0.35		115.8	178.1	175.8	62.0	177.8	103	69	69	68		1.001	2.935	340
1275	203.288	204.968		0.16	0.16	1.32	1.06	0.24	79	79	68	1.93	1.40	73	0.014	100	100	38.6	-0.23	0.39		115.7	177.9	175.6	61.9	177.7	102	69	69	68		1.001	3.258	377
1276	203.448	205.129		0.16	0.16	1.32	1.06	0.24	79	79	68	1.95	1.40	73	0.015	96	96	38.4	0.24	0.39		115.5	177.8	175.5	62.0	177.4	102	69	69	68		1.001	3.260	377
1277	203.608	205.290		0.16	0.16	1.32	1.06	0.24	79	79	68	1.93	1.40	73	0.013	104	103	38.4	-0.06	0.41		114.6	177.4	173.5	62.3	176.9	101	69	69	68		1.001	3.416	392
1278	203.768	205.452		0.16	0.16	1.33	1.06	0.24	79	79	68	1.94	1.40	73	0.015	96	97	38.5	-0.09	0.35		113.7	177.3	173.9	63.0	176.7	100	69	69	68		1.001	2.938	334
1279	203.929	205.613		0.16	0.16	1.32	1.06	0.24	79	79	68	1.95	1.40	73	0.014	100	100	38.5	0.06	0.35		113.0	177.3	173.9	63.7	176.7	100	69	69	68		1.001	2.936	332
1280	204.088	205.774		0.16	0.16	1.33	1.07	0.24	79	79	68	1.94	1.40	73	0.014	99	100	38.5	0.01	0.37		111.2	177.1	173.6	65.2	176.4	99	69	69	68		1.001	3.092	344
1281	204.248	205.935		0.16	0.16	1.33	1.07	0.24	79	79	68	1.94	1.40	73	0.014	100	100	38.5	-0.09	0.33		109.4	177.0	173.6	66.8	176.1	98	69	69	68		1.001	2.778	304
1282	204.409	206.097		0.16	0.16	1.33	1.06	0.24	79	79	68	1.93	1.40	73	0.015	97	97	38.3	0.20	0.37		108.3	176.9	173.5	67.7	176.0	98	69	69	68		1.001	3.096	336
1283	204.569	206.258		0.16	0.16	1.33	1.06	0.24	79	79	68	1.93	1.40	73	0.015	96	96	38.5	-0.13	0.33		108.0	176.8	173.4	68.0	176.0	98	69	69	68		1.001	2.775	300
1284	204.729	206.419		0.16	0.16	1.33	1.06	0.24	79	79	68	1.94	1.40	73	0.015	96	96	38.5	0.01	0.37		107.4	176.6	173.2	68.4	175.8	97	69	69	68		1.001	3.099	333
1285	204.889	206.581		0.16	0.16	1.33	1.06	0.24	79	79	68	1.95	1.40	73	0.014	100	100	38.4	0.03	0.35		107.0	176.5	173.0	68.5	175.6	97	69	69	68		1.001	2.935	315
1286	205.050	206.742		0.16	0.16	1.31	1.06	0.24	79	79	68	1.93	1.40	73	0.014	100	100	38.4	0.05	0.30		106.9	176.3	172.9	68.6	175.5	97	69	69	68		1.001	2.459	263
1287	205.210	206.903		0.16	0.16	1.32	1.06	0.24	79	79	68	1.94	1.40	77	0.014	100	100	38.5	-0.13	0.31		107.0	176.2	172.7	68.3	175.3	131	69	69	68		1.001	2.613	280
1288	205.370	207.064		0.16	0.16	1.32	1.06	0.24	79	79	68	1.94	1.40	75	0.015	97	97	38.4	0.07	0.35		106.6	176.0	172.6	68.6	175.2	144	69	69	68		1.001	2.935	313
1289	205.530	207.226		0.16	0.16	1.33	1.06	0.24	79	79	68	1.94	1.40	73	0.013	104	104	38.3	0.18	0.31		106.3	175.8	172.4	68.7	175.0	129	69	69	68		1.001	2.615	278
1290	205.690	207.386		0.16	0.16	1.32	1.06	0.24	79	79	68	1.93	1.40	73	0.014	100	99	38.3	-0.05	0.33		106.3	175.7	172.3	68.4	174.8	119	69	69	68		1.001	2.776	296
1291	205.850	207.547		0.16	0.16	1.32	1.06	0.24	79	79	68	1.93	1.40	73	0.014	100	100	38.5	-0.16	0.34		106.0	175.6	172.2	68.7	174.7	113	69	69	68		1.001	2.793	296
1292	206.010	207.709		0.16	0.16	1.32	1.07	0.24	79	79	68	1.95	1.40	73	0.014	100	100	38.4	0.11	0.33		105.7	175.4	172.0	68.8	174.4	109	69	69	68		1.001	2.778	294

Elapsed Time	Particulate Sampling Data																	Fuel Weight, lb		Flow, gpm		Temperature Data, oF													
	Gas Meter Cubic Feet (1)	Gas Meter Cubic Feet (2)	Gas Meter Cubic Feet (amb)	Sample Rate, cfm (1)	Sample Rate, cfm (2)	Orifice dH (1)	Orifice dH (2)	Orifice dH (amb)	Meter oF (1)	Meter oF (2)	Meter oF (amb)	Meter Vac. in. Hg. (1)	Meter Vac. in. Hg. (2)	Dilution Tunnel Temp.	Dilution Tunnel dP	Pro. Rate (%) (1)	Pro. Rate (%) (2)	Scale Reading	Weight Change	Load Side Liquid Flow Rate	Boiler Side Liquid Flow Rate (optional)	Thermopile ΔT	Boiler to Heat Exch. Temp.	Heat Exch to Boiler Temp.	Inlet Load Temp.	Outlet Load Temp.	Stack	Filter (1)	Filter (2)	Ambient		Specific Heat of Inlet Water (BTU/lb-°F)	Mass Flow Rate of Inlet Water (lb/min)	Heat Output, Btu
1293	206.170	207.870		0.16	0.16	1.32	1.06	0.24	79	79	68	1.94	1.40	73	0.015	96	96	38.3	0.05	0.37		105.8	175.3	171.8	68.5	174.3	107	69	69	68		1.001	3.039	322
1294	206.330	208.031		0.16	0.16	1.32	1.06	0.24	79	79	68	1.94	1.40	73	0.014	100	100	38.4	-0.05	0.33		106.0	175.1	171.7	68.3	174.3	105	69	69	68		1.001	2.775	295
1295	206.490	208.192		0.16	0.16	1.32	1.06	0.24	79	79	68	1.95	1.40	73	0.014	100	100	38.3	0.05	0.33		105.4	174.9	171.5	68.7	174.1	103	69	69	68		1.001	2.730	288
1296	206.650	208.355		0.16	0.16	1.33	1.06	0.24	79	79	68	1.93	1.40	73	0.015	96	98	38.2	0.11	0.31		105.2	174.8	171.4	68.6	173.8	102	69	69	68		1.001	2.550	269
1297	206.810	208.515		0.16	0.16	1.33	1.06	0.24	79	79	68	1.94	1.40	73	0.014	100	99	38.3	-0.11	0.34		105.2	174.6	171.2	68.6	173.8	101	69	69	68		1.001	2.813	296
1298	206.970	208.676		0.16	0.16	1.32	1.06	0.24	79	79	68	1.95	1.40	73	0.014	100	100	38.4	-0.08	0.35		105.2	174.5	171.1	68.5	173.7	100	69	69	68		1.001	2.949	311
1299	207.130	208.838		0.16	0.16	1.33	1.06	0.24	79	79	68	1.94	1.40	73	0.014	100	100	38.3	0.13	0.39		105.0	174.4	170.9	68.5	173.4	100	69	69	68		1.001	3.253	342
1300	207.291	209.000		0.16	0.16	1.33	1.06	0.24	79	79	68	1.94	1.40	73	0.014	100	100	38.4	-0.12	0.37		104.9	174.2	170.8	68.4	173.3	99	69	69	68		1.001	3.090	324
1301	207.451	209.160		0.16	0.16	1.33	1.06	0.24	79	79	68	1.94	1.40	73	0.014	100	99	38.3	0.06	0.33		104.7	174.1	170.7	68.4	173.1	98	69	69	68		1.001	2.771	291
1302	207.611	209.322		0.16	0.16	1.32	1.06	0.24	79	79	68	1.95	1.40	72	0.015	96	97	38.2	0.10	0.33		104.7	174.0	170.6	68.4	173.1	98	69	69	68		1.001	2.777	291
1303	207.772	209.483		0.16	0.16	1.33	1.06	0.24	79	79	68	1.95	1.40	72	0.014	100	100	38.3	-0.10	0.35		104.4	173.8	170.4	68.6	173.0	97	69	69	68		1.001	2.935	307
1304	207.932	209.645		0.16	0.16	1.32	1.05	0.24	79	79	68	1.95	1.40	72	0.015	96	97	38.4	-0.05	0.33		104.1	173.7	170.3	68.7	172.7	96	69	69	68		1.001	2.773	289
1305	208.092	209.806		0.16	0.16	1.31	1.06	0.24	79	79	68	1.93	1.40	72	0.014	100	100	38.4	0.00	0.35		104.0	173.5	170.1	68.6	172.6	96	69	69	68		1.001	2.937	306
1306	208.252	209.967		0.16	0.16	1.32	1.06	0.24	79	79	68	1.94	1.40	72	0.015	96	96	38.2	0.14	0.35		104.3	173.3	169.9	68.1	172.4	95	69	69	68		1.001	2.934	306
1307	208.412	210.129		0.16	0.16	1.31	1.06	0.24	79	79	68	1.94	1.40	72	0.013	103	104	38.3	-0.03	0.41		104.5	173.0	169.0	67.7	172.2	95	69	69	68		1.001	3.417	358
1308	208.572	210.290		0.16	0.16	1.32	1.06	0.24	79	79	68	1.95	1.40	72	0.014	100	100	38.2	0.03	0.41		105.5	172.9	169.1	66.7	172.2	94	69	69	68		1.001	3.415	361
1309	208.732	210.451		0.16	0.16	1.32	1.06	0.24	79	79	68	1.95	1.40	72	0.013	103	103	38.2	0.03	0.41		105.9	172.6	168.8	66.0	171.9	94	69	69	68		1.001	3.419	362
1310	208.892	210.612		0.16	0.16	1.32	1.06	0.24	79	79	68	1.95	1.40	72	0.015	96	96	38.4	-0.17	0.43		106.1	172.4	168.5	65.6	171.7	94	69	69	68		1.001	3.579	380
1311	209.052	210.774		0.16	0.16	1.32	1.06	0.24	79	79	67	1.95	1.40	72	0.014	100	100	38.3	0.11	0.43		105.9	172.1	168.3	65.5	171.5	93	69	69	67		1.001	3.571	379
1312	209.212	210.934		0.16	0.16	1.33	1.06	0.24	79	79	68	1.94	1.40	72	0.014	100	99	38.2	0.02	0.43		105.4	172.0	167.9	65.7	171.2	93	69	69	68		1.001	3.577	378
1313	209.372	211.096		0.16	0.16	1.33	1.06	0.24	79	79	68	1.95	1.40	72	0.014	100	100	38.3	-0.02	0.39		104.3	171.7	167.8	66.7	171.0	93	69	69	68		1.001	3.252	340
1314	209.532	211.258		0.16	0.16	1.33	1.06	0.24	79	79	68	1.94	1.40	72	0.014	100	100	38.3	-0.04	0.45		103.8	171.6	167.5	67.0	170.7	92	69	69	68		1.001	3.736	388
1315	209.693	211.419		0.16	0.16	1.32	1.06	0.24	79	79	67	1.93	1.40	72	0.013	104	103	38.3	-0.02	0.47		103.4	171.4	167.3	67.1	170.5	92	69	69	67		1.001	3.885	402
1316	209.853	211.580		0.16	0.16	1.33	1.06	0.24	79	79	68	1.95	1.40	72	0.014	100	100	38.3	0.08	0.43		103.1	171.2	167.1	67.2	170.3	92	69	69	68		1.001	3.580	370
1317	210.013	211.741		0.16	0.16	1.33	1.06	0.24	79	79	68	1.93	1.40	72	0.016	93	93	38.4	-0.12	0.47		102.9	171.0	166.9	67.3	170.2	91	69	69	68		1.001	3.901	402
1318	210.174	211.903		0.16	0.16	1.32	1.05	0.24	79	79	68	1.95	1.40	74	0.015	97	97	38.2	0.16	0.36		102.6	170.8	166.8	67.3	170.0	90	69	69	68		1.001	2.962	304
1319	210.334	212.064		0.16	0.16	1.32	1.06	0.24	79	79	68	1.94	1.40	76	0.014	100	100	38.2	-0.01	0.43		102.4	170.6	166.5	67.3	169.8	129	69	69	68		1.001	3.586	368
1320	210.494	212.224		0.16	0.16	1.32	1.07	0.24	79	79	68	1.95	1.40	73	0.015	96	96	38.2	0.07	0.38		102.2	170.4	166.3	67.3	169.5	130	69	69	68		1.001	3.166	324
1321	210.654	212.386		0.16	0.16	1.33	1.06	0.24	79	79	68	1.94	1.40	72	0.015	96	97	38.1	0.02	0.43		102.1	170.2	166.1	67.2	169.3	118	69	69	68		1.001	3.575	366
1322	210.814	212.547		0.16	0.16	1.33	1.06	0.24	79	79	67	1.95	1.40	72	0.014	100	100	38.3	-0.15	0.39		101.9	170.0	166.0	67.2	169.1	110	69	69	67		1.001	3.256	332
1323	210.974	212.708		0.16	0.16	1.32	1.06	0.24	79	79	68	1.95	1.40	72	0.017	90	90	38.1	0.20	0.43		101.6	169.9	165.8	67.3	169.0	106	69	69	68		1.001	3.572	363
1324	211.135	212.870		0.16	0.16	1.32	1.06	0.24	79	79	68	1.95	1.40	72	0.014	100	100	38.3	-0.22	0.43		101.8	169.7	165.7	67.0	168.8	102	69	69	68		1.001	3.575	364
1325	211.295	213.032		0.16	0.16	1.32	1.06	0.24	79	79	68	1.95	1.40	72	0.014	100	100	38.2	0.11	0.41		101.7	169.4	165.4	66.9	168.6	101	69	69	68		1.001	3.418	348
1326	211.455	213.193		0.16	0.16	1.32	1.06	0.24	79	79	68	1.94	1.40	72	0.014	100	100	38.2	-0.04	0.47		101.6	169.3	165.2	66.8	168.4	99	69	69	68		1.001	3.900	397
1327	211.615	213.353		0.16	0.16	1.32	1.06	0.24	79	79	67	1.93	1.40	72	0.014	100	99	38.2	0.04	0.41		101.5	169.0	165.1	66.7	168.2	98	69	69	67		1.001	3.420	347
1328	211.775	213.515		0.16	0.16	1.32	1.06	0.24	79	79	68	1.95	1.40	72	0.014	100	100	38.4	-0.16	0.43		101.2	168.9	164.9	66.8	168.1	97	69	69	68		1.001	3.577	363
1329	211.935	213.677		0.16	0.16	1.33	1.06	0.24	79	79	68	1.95	1.40	72	0.014	100	100	38.3	0.11	0.39		101.3	168.7	165.1	66.6	167.9	96	69	69	68		1.001	3.260	331
1330	212.095	213.838		0.16	0.16	1.33	1.07	0.24	79	79	68	1.95	1.40	72	0.015	96	96	38.2	0.07	0.43		101.4	168.5	164.6	66.3	167.7	95	69	69	68		1.001	3.578	363
1331	212.256	213.999		0.16	0.16	1.33	1.07	0.24	79	79	68	1.94	1.40	72	0.014	100	100	38.3	-0.11	0.41		101.4	168.3	164.4	66.1	167.5	95	69	69	68		1.001	3.416	347
1332	212.416	214.160		0.16	0.16	1.33	1.07	0.24	79	79	68	1.95	1.40	72	0.016	93	93	38.2	0.08	0.39		103.4	168.2	166.3	64.5	167.8	94	69	69	68		1.001	3.254	337
1333	212.576	214.322		0.16	0.16	1.33	1.06	0.24	79	79	68	1.95	1.40	72	0.015	96	97	38.3	-0.08	0.41		104.3	168.0	165.9	63.4	167.7	94	69	69	68		1.001	3.414	357
1334	212.737	214.483		0.16	0.16	1.33	1.06	0.24	79	79	68	1.94	1.40	72	0.013	104	103	38.2	0.10	0.43		104.6	167.8	165.7	62.9	167.5	93	69	69	68		1.001	3.578	375
1335	212.897	214.644		0.16	0.16	1.33	1.07	0.24	79	79	67	1.95	1.40	72	0.014	100	100	38.2	0.05	0.43		104.6	167.5	165.4	62.7	167.3	92	69	69	67		1.001	3.578	375
1336	213.058	214.806		0.16	0.16	1.32	1.07	0.24	79	79	68	1.95	1.40	72	0.014	100	100	38.3	-0.15	0.45		104.5	167.4	165.2	62.7	167.1	92	69	69	68		1.001	3.739	391
1337	213.218	214.968		0.16	0.16	1.33	1.06	0.24	79	79	68	1.95	1.40	72	0.016	93	94	38.2	0.07	0.35		104.3	167.2	165.1	62.6	167.0	92	69	69	68		1.001	2.939	307
1338	213.378	215.128		0.16	0.16	1.33	1.07	0.24	79	79	68	1.95	1.40	72	0.013	103	103	38.2	0.00	0.43		104.1	167.1	164.9	62.6	166.8	92	69	69	68		1.001	3.578	373
1339	213.538	215.290		0.16	0.16	1.33	1.07	0.24	79	79	68	1.95	1.40	72	0.015	96	97	38.1	0.10	0.41		104.0	166.8	164.6	62.6	166.6	91	69	69	68		1.001	3.421	356
1340	213.698	215.452		0.16	0.16	1.32	1.06	0.24	79	79	68	1.93	1.40	72	0.015	96	97	38.2	-0.03	0.41		103.8	166.6	164.5	62.6	166.4	90	69	69	68		1.001	3.413	355
1341	213.859	215.613		0.16	0.16	1.32	1.06	0.24	79	79	68	1.95	1.40	72	0.014	100	100	38.1	0.06	0.41		103.6	166.5	164.4	62.6	166.2	90	69	69	68		1.001	3.420	355
1342	214.019	215.773		0.16	0.16	1.32	1.07	0.24	79	79	68	1.95	1.40	72	0.015	96	96	38.1	-0.06	0.40		103.5	166.2	164.3	62.5	166.0	90	69	69	68		1.001	3.360	348
1343	214.179	215.935		0.16	0.16	1.32	1.06	0.24	79	79	68	1.94	1.40	72	0.013	103	104	38.2	-0.07	0.25		103.4	166.2	164.7	62.4	165.8	90	69	69	68		1.001	2.044	212
1344	214.339	216.097		0.16	0.16	1.32	1.06	0.24	79	79	68	1.95	1.40	72	0.015	96	97	38.1	0.08	0.28		103.3	166.2	164.8	62.4	165.7	89	69	69	68		1.001	2.302	238
1345	214.499	216.258		0.16	0.16	1.32	1.06	0.24	79	79	67	1.93	1.40	72	0.013	103	103	38.2	-0.04	0.28		103.2	166.2	164.7	62.5	165.7	89	69	69	67		1.001	2.300	238
1346	214.659	216.419		0.16	0.16	1.33	1.07	0.24	79	79	68	1.94	1.40	72	0.014	100	100	38.2	0.03	0.78		102.7	165.1	161.1	62.4	165.1	89	69	69	68		1.001	6.506	669
1347	214.819	216.581		0.16	0.16	1.33	1.06	0.24	79	79	68	1.93	1.40	72	0.017	90	91	38.2	0.00	0.80		102.2	164.2	160.3	62.1	164.2	88	69	69	68		1.001	6.673	682
1348	214.980	216.742		0.16	0.16	1.32	1.06	0.24	79	79	68	1.94	1.40	72	0.014	100	100	38.1	0.05	0.57		102.2	163.8	160.4	61.4	163.6	88	69	69	68		1.001	4.707	482
1349	215.140	216.903		0.16	0.16	1.33	1.06	0.24	79	79	67	1.94	1.40	72	0.014	100	100	38.2	-0.11	0.30		102.3	164.3	163.0	61.2	163.4	88	69	69	67		1.001	2.460	252
1350	215.300	217.064		0.16	0.16	1.33	1.06	0.24	79	79	67	1.94	1.40	75	0.016	94	93	38.4	-0.14	0.28		102.6	164.6	163.5	61.3	163.9	112	69	69	67		1.001	2.307	237
1351	215.460	217.227		0.16	0.16	1.33	1.06	0.24	79	79	67	1.93	1.40	75	0.014	100	101	38.1	0.31	0.26		102.8	164.7	163.6	61.4	164.2	132	69	69	67		1.001	2.146	221
1352	215.621	217.387		0.16	0.16	1.33	1.06	0.24	79	79	67	1.93	1.40	73	0.014	100	99	38.1	-0.10	0.28		102.6	164.6	163.5	61.5	164.1	119	69	69	67		1.001	2.304	237
1353	215.781	217.548		0.16	0.16	1.33	1.06	0.24	79	79	68	1.93	1.40	72	0.015	96	96	38.2	-0.03	0.26		102.4	164.5	163.4	61.6	164.0	110	69	69	68		1.001	2.149	220
1354	215.942	217.710		0.16	0.16	1.33	1.06	0.24	79	79	68	1.94	1.40	72	0.013	104	104	38.1	0.08	0.30		102.1	164.4	163.3	61.7	163.8	104	69	69	68		1.001	2.460	251

Elapsed Time	Particulate Sampling Data																	Fuel Weight, lb		Flow, gpm		Temperature Data, oF												
	Gas Meter Cubic Feet (1)	Gas Meter Cubic Feet (2)	Gas Meter Cubic Feet (amb)	Sample Rate, cfm (1)	Sample Rate, cfm (2)	Orifice dH (1)	Orifice dH (2)	Orifice dH (amb)	Meter oF (1)	Meter oF (2)	Meter oF (amb)	Meter Vac. in. Hg. (1)	Meter Vac. in. Hg. (2)	Dilution Tunnel Temp.	Dilution Tunnel dP	Pro. Rate (%) (1)	Pro. Rate (%) (2)	Scale Reading	Weight Change	Load Side Liquid Flow Rate	Boiler Side Liquid Flow Rate (optional)	Thermopile ΔT	Boiler to Heat Exch. Temp.	Heat Exch to Boiler Temp.	Inlet Load Temp.	Outlet Load Temp.	Stack	Filter (1)	Filter (2)	Ambient		Specific Heat of Inlet Water (BTU/lb-°F)	Mass Flow Rate of Inlet Water (lb/min)	Heat Output, Btu
1355	216.102	217.872		0.16	0.16	1.33	1.06	0.24	79	79	68	1.93	1.40	72	0.014	100	100	38.2	-0.06	0.24		101.9	164.3	163.2	61.9	163.8	100	69	69	68		1.001	1.969	203
1356	216.262	218.033		0.16	0.16	1.32	1.06	0.24	79	79	67	1.95	1.40	72	0.013	103	103	38.2	0.00	0.04		101.6	164.2	163.1	62.0	163.6	98	69	69	67		1.001	0.347	35
1357	216.422	218.194		0.16	0.16	1.32	1.06	0.24	79	79	68	1.93	1.40	72	0.015	96	96	38.0	0.15	0.37		101.1	164.1	162.6	62.2	163.3	97	68	69	68		1.001	3.101	314
1358	216.582	218.356		0.16	0.16	1.32	1.06	0.24	79	79	67	1.94	1.40	72	0.015	96	97	38.2	-0.18	0.31		101.2	163.9	162.4	62.4	163.6	95	69	69	67		1.001	2.617	265
1359	216.742	218.517		0.16	0.16	1.32	1.06	0.24	79	79	67	1.95	1.40	72	0.015	96	96	38.1	0.06	0.43		100.6	163.7	161.6	62.6	163.2	95	69	69	67		1.001	3.590	362
1360	216.902	218.678		0.16	0.16	1.32	1.06	0.24	79	79	68	1.95	1.40	72	0.015	96	96	38.2	-0.03	0.39		100.3	163.3	161.2	62.7	163.0	93	69	69	68		1.001	3.240	325
1361	217.063	218.839		0.16	0.16	1.32	1.06	0.24	79	79	67	1.94	1.40	72	0.015	97	96	38.2	0.01	0.43		100.0	163.1	160.9	62.8	162.8	92	69	69	67		1.001	3.578	358
1362	217.223	219.002		0.16	0.16	1.32	1.06	0.24	79	79	67	1.93	1.40	72	0.014	100	101	38.1	0.06	0.43		99.9	162.9	160.8	62.7	162.6	92	69	69	67		1.001	3.581	358
1363	217.383	219.163		0.16	0.16	1.33	1.06	0.24	79	79	68	1.93	1.40	72	0.014	100	100	38.3	-0.24	0.43		99.7	162.7	160.7	62.6	162.4	92	69	69	68		1.001	3.583	358
1364	217.543	219.324		0.16	0.16	1.32	1.06	0.24	79	79	68	1.95	1.40	72	0.014	100	100	38.1	0.19	0.43		99.6	162.5	160.4	62.5	162.1	91	69	69	68		1.001	3.581	357
1365	217.703	219.485		0.16	0.16	1.33	1.06	0.24	79	79	68	1.94	1.40	72	0.014	100	100	38.1	0.07	0.35		99.7	162.3	160.2	62.4	162.0	90	69	69	68		1.001	2.935	293
1366	217.863	219.647		0.16	0.16	1.33	1.06	0.24	79	79	67	1.95	1.40	76	0.014	100	101	38.1	-0.06	0.39		99.6	162.2	160.2	62.2	161.9	118	69	69	67		1.001	3.256	325
1367	218.023	219.807		0.16	0.16	1.32	1.06	0.24	79	79	68	1.93	1.40	77	0.014	100	99	38.2	-0.05	0.41		99.4	161.9	159.9	62.2	161.6	138	69	69	68		1.001	3.419	340
1368	218.184	219.969		0.16	0.16	1.33	1.07	0.24	79	79	67	1.95	1.40	78	0.014	101	101	37.8	0.36	0.43		99.3	161.7	159.7	62.1	161.4	147	69	69	67		1.001	3.577	356
1369	218.344	220.130		0.16	0.16	1.33	1.07	0.24	79	79	67	1.94	1.40	79	0.014	100	100	37.9	-0.05	0.43		99.2	161.5	159.5	62.1	161.3	155	69	69	67		1.001	3.576	355
1370	218.505	220.292		0.16	0.16	1.32	1.06	0.24	79	79	67	1.96	1.40	79	0.014	101	101	37.7	0.17	0.37		98.9	161.4	159.4	62.0	161.0	163	69	69	67		1.001	3.094	306
1371	218.665	220.453		0.16	0.16	1.32	1.07	0.24	79	79	67	1.94	1.40	80	0.014	100	100	37.5	0.24	0.43		98.9	161.3	159.3	62.0	160.9	175	69	69	67		1.001	3.571	354
1372	218.825	220.613		0.16	0.16	1.32	1.06	0.24	79	79	67	1.94	1.40	83	0.015	97	97	37.2	0.22	0.43		98.9	161.2	159.2	62.0	160.8	188	69	70	67		1.001	3.560	354
1373	218.985	220.775		0.16	0.16	1.33	1.06	0.24	79	79	67	1.96	1.40	85	0.014	101	101	37.0	0.19	0.39		98.8	161.2	159.2	61.9	160.7	201	70	70	67		1.001	3.255	322
1374	219.145	220.936		0.16	0.16	1.32	1.06	0.24	79	79	67	1.94	1.40	86	0.014	101	101	36.6	0.24	0.47		99.0	161.4	159.4	61.9	160.9	211	70	70	67		1.001	3.901	387
1375	219.305	221.097		0.16	0.16	1.31	1.07	0.24	79	79	68	1.96	1.40	88	0.014	101	101	36.6	0.19	0.43		99.1	161.6	159.6	61.9	161.0	220	70	70	68		1.001	3.578	355
1376	219.464	221.258		0.16	0.16	1.33	1.06	0.24	79	79	68	1.96	1.40	90	0.014	101	101	36.2	0.46	0.41		99.4	161.9	159.9	61.8	161.3	229	70	71	68		1.001	3.416	340
1377	219.624	221.419		0.16	0.16	1.32	1.06	0.24	79	79	67	1.94	1.40	90	0.014	101	101	35.9	0.26	0.41		100.0	162.4	160.4	61.8	161.8	238	70	71	67		1.001	3.412	341
1378	219.784	221.579		0.16	0.16	1.32	1.06	0.24	79	79	67	1.97	1.40	91	0.014	101	101	35.4	0.51	0.39		100.5	162.9	160.8	61.8	162.3	245	71	71	67		1.001	3.254	327
1379	219.944	221.740		0.16	0.16	1.32	1.06	0.24	79	79	67	1.95	1.40	92	0.015	98	98	35.2	0.15	0.41		101.1	163.7	161.5	61.7	162.8	252	71	71	67		1.001	3.417	346
1380	220.103	221.901		0.16	0.16	1.33	1.06	0.24	79	79	67	1.97	1.40	93	0.014	101	102	34.6	0.63	0.43		101.8	164.3	162.2	61.7	163.6	258	71	72	67		1.001	3.570	364
1381	220.263	222.061		0.16	0.16	1.33	1.06	0.24	79	79	67	1.97	1.40	95	0.015	98	98	34.4	0.23	0.41		102.7	165.1	163.0	61.8	164.4	264	71	72	67		1.001	3.406	350
1382	220.423	222.222		0.16	0.16	1.33	1.06	0.24	79	79	67	1.96	1.40	95	0.014	102	102	33.9	0.49	0.45		103.2	166.0	163.8	61.8	165.0	270	71	72	67		1.001	3.739	386
1383	220.583	222.383		0.16	0.16	1.33	1.06	0.24	79	79	67	1.96	1.40	97	0.015	99	98	33.3	0.56	0.47		104.1	166.9	164.8	61.9	165.9	278	72	72	67		1.001	3.889	405
1384	220.743	222.544		0.16	0.16	1.33	1.06	0.24	79	79	67	1.96	1.40	98	0.015	99	99	33.0	0.32	0.39		104.8	167.8	165.6	62.0	166.8	287	72	72	67		1.001	3.258	342
1385	220.903	222.704		0.16	0.16	1.32	1.06	0.24	79	79	68	1.96	1.40	98	0.014	102	101	32.5	0.52	0.41		105.7	168.7	166.5	62.1	167.8	294	72	73	68		1.001	3.415	361
1386	221.062	222.864		0.16	0.16	1.32	1.06	0.24	79	79	67	1.96	1.40	99	0.015	98	98	32.0	0.45	0.41		106.6	169.9	167.7	62.2	168.8	301	72	73	67		1.001	3.416	365
1387	221.222	223.025		0.16	0.16	1.32	1.05	0.24	79	79	68	1.96	1.40	100	0.013	106	106	31.7	0.37	0.40		107.9	171.2	169.0	62.3	170.1	307	72	73	68		1.001	3.321	359
1388	221.381	223.185		0.16	0.16	1.32	1.06	0.24	79	79	67	1.97	1.40	100	0.016	95	95	31.2	0.47	0.42		109.1	172.3	170.1	62.4	171.4	311	73	73	67		1.001	3.470	379
1389	221.541	223.345		0.16	0.16	1.32	1.06	0.24	79	79	67	1.97	1.40	100	0.016	96	95	30.8	0.36	0.41		109.8	173.4	171.2	62.5	172.3	312	73	73	67		1.001	3.413	375
1390	221.700	223.506		0.16	0.16	1.32	1.06	0.24	79	79	68	1.97	1.50	100	0.015	98	99	30.5	0.36	0.41		111.0	174.4	172.3	62.5	173.6	312	73	74	68		1.001	3.423	381
1391	221.860	223.666		0.16	0.16	1.33	1.06	0.24	79	79	67	1.98	1.50	101	0.015	99	98	29.8	0.64	0.43		111.9	175.5	173.2	62.6	174.4	315	73	74	67		1.001	3.573	400
1392	222.019	223.826		0.16	0.16	1.32	1.06	0.24	79	79	67	1.98	1.50	101	0.015	98	98	29.3	0.56	0.39		112.9	176.6	174.3	62.7	175.6	318	73	74	67		1.001	3.256	368
1393	222.178	223.987		0.16	0.16	1.32	1.05	0.24	79	79	67	1.98	1.50	104	0.015	99	99	28.7	0.60	0.37		114.1	177.7	175.4	62.7	176.7	327	74	74	67		1.001	3.096	354
1394	222.338	224.146		0.16	0.16	1.32	1.05	0.24	79	79	67	1.98	1.50	105	0.016	96	95	28.3	0.35	0.39		115.3	178.9	176.6	62.6	177.9	339	74	75	67		1.001	3.251	375
1395	222.498	224.306		0.16	0.16	1.32	1.05	0.24	79	79	67	1.98	1.50	106	0.015	99	99	27.8	0.52	0.39		116.5	180.2	177.9	62.6	179.1	347	74	75	67		1.001	3.252	379
1396	222.657	224.466		0.16	0.16	1.32	1.05	0.24	79	79	68	1.99	1.50	107	0.015	99	99	27.0	0.82	0.41		118.0	181.7	179.3	62.5	180.5	352	74	75	68		1.001	3.411	403
1397	222.816	224.625		0.16	0.16	1.32	1.05	0.24	79	79	68	1.99	1.50	107	0.015	99	98	26.7	0.23	0.41		119.4	183.0	180.6	62.4	181.9	355	74	75	68		1.001	3.415	408
1398	222.976	224.785		0.16	0.16	1.32	1.05	0.24	79	79	68	1.96	1.50	90	0.015	98	97	26.5	0.22	0.39		120.8	184.3	181.9	62.3	183.1	332	74	74	68		1.001	3.259	394
1399	223.135	224.946		0.16	0.16	1.32	1.05	0.24	79	79	68	1.98	1.40	85	0.015	97	97	26.1	0.41	0.43		121.9	185.1	182.7	62.3	184.2	302	73	74	68		1.001	3.574	436
1400	223.294	225.106		0.16	0.16	1.32	1.05	0.24	79	79	67	1.96	1.40	81	0.015	97	96	26.1	0.01	0.37		122.6	185.8	183.4	62.3	184.9	284	73	73	67		1.001	3.092	380
1401	223.454	225.266		0.16	0.16	1.32	1.06	0.24	79	79	68	1.97	1.40	80	0.017	91	91	25.8	0.29	0.41		123.2	186.2	183.8	62.2	185.4	271	73	73	68		1.001	3.410	421
1402	223.613	225.428		0.16	0.16	1.32	1.05	0.24	79	79	68	1.95	1.40	79	0.014	100	101	25.8	0.04	0.43		123.6	186.6	184.3	62.2	185.8	260	73	73	68		1.001	3.574	442
1403	223.773	225.587		0.16	0.16	1.32	1.05	0.24	79	79	67	1.96	1.40	78	0.015	97	96	25.8	-0.02	0.37		123.9	186.8	184.5	62.2	186.1	250	72	73	67		1.001	3.094	384
1404	223.932	225.748		0.16	0.16	1.31	1.06	0.24	79	79	67	1.97	1.40	77	0.013	103	104	25.7	0.04	0.04		124.0	187.1	185.4	62.2	186.2	243	72	72	67		1.001	0.294	36
1405	224.092	225.909		0.16	0.16	1.32	1.06	0.24	79	79	68	1.96	1.40	77	0.014	100	100	25.7	0.06	0.26		124.0	187.5	186.3	62.2	186.2	236	72	72	68		1.001	2.135	265
1406	224.252	226.069		0.16	0.16	1.31	1.05	0.24	79	79	68	1.97	1.40	77	0.015	97	96	25.5	0.15	0.24		124.5	187.8	186.6	62.4	186.9	230	72	72	68		1.001	1.982	247
1407	224.412	226.229		0.16	0.16	1.32	1.05	0.24	79	79	68	1.96	1.40	76	0.014	100	99	25.5	0.03	0.24		124.3	188.0	186.9	62.5	186.8	225	72	72	68		1.001	1.976	246
1408	224.572	226.390		0.16	0.16	1.32	1.05	0.24	79	79	68	1.95	1.40	76	0.015	97	97	25.4	0.08	0.24		124.1	188.3	187.1	62.6	186.8	220	72	72	68		1.001	1.978	246
1409	224.731	226.551		0.16	0.16	1.31	1.04	0.24	79	79	68	1.97	1.40	76	0.015	96	97	25.4	0.02	0.28		124.5	188.4	187.0	62.6	187.1	215	71	72	68		1.001	2.291	285
1410	224.891	226.711		0.16	0.16	1.31	1.05	0.24	79	79	68	1.95	1.40	75	0.015	97	96	25.3	0.10	0.19		124.5	188.6	187.4	62.8	187.3	212	71	72	68		1.001	1.567	195
1411	225.051	226.872		0.16	0.16	1.31	1.05	0.24	79	79	68	1.96	1.40	74	0.014	100	100	25.3	0.00	0.23		124.7	188.7	187.5	63.0	187.7	208	71	72	68		1.001	1.944	243
1412	225.210	227.033		0.16	0.16	1.31	1.05	0.24	79	79	68	1.96	1.40	74	0.015	96	96	25.4	-0.12	0.21		124.6	188.9	187.5	63.2	187.8	205	71	71	68		1.001	1.748	218
1413	225.370	227.193		0.16	0.16	1.31	1.06	0.24	80	79	68	1.97	1.40	73	0.014	100	99	25.3	0.10	0.42		124.7	188.8	186.3	63.3	188.1	201	71	71	68		1.001	3.516	439
1414	225.529	227.354		0.16	0.16	1.32	1.05	0.24	80	79	68	1.97	1.40	73	0.015	96	96	25.3	0.01	0.41		124.6	188.6	186.2	63.5	188.0	197	71	71	68		1.001	3.413	426
1415	225.689	227.515		0.16	0.16	1.32	1.05	0.24	79	79	68	1.97	1.40	73	0.013	104	103	25.4	-0.05	0.36		124.4	188.5	186.1	63.6	188.1	193	71	71	68		1.001	2.990	373
1416	225.849	227.675		0.16	0.16	1.32	1.05	0.24	79	79	68	1.97	1.40	73	0.015	96	96	25.4	-0.03	0.38		124.3	188.5	186.1	63.6	187.9	189	71	71	68		1.001	3.155	393

Elapsed Time	Particulate Sampling Data																	Fuel Weight, lb		Flow, gpm		Temperature Data, oF												
	Gas Meter Cubic Feet (1)	Gas Meter Cubic Feet (2)	Gas Meter Cubic Feet (amb)	Sample Rate, cfm (1)	Sample Rate, cfm (2)	Orifice dH (1)	Orifice dH (2)	Orifice dH (amb)	Meter oF (1)	Meter oF (2)	Meter oF (amb)	Meter Vac. in. Hg. (1)	Meter Vac. in. Hg. (2)	Dilution Tunnel Temp.	Dilution Tunnel dP	Pro. Rate (%) (1)	Pro. Rate (%) (2)	Scale Reading	Weight Change	Load Side Liquid Flow Rate	Boiler Side Liquid Flow Rate (optional)	Thermopile ΔT	Boiler to Heat Exch. Temp.	Heat Exch to Boiler Temp.	Inlet Load Temp.	Outlet Load Temp.	Stack	Filter (1)	Filter (2)	Ambient		Specific Heat of Inlet Water (BTU/lb-°F)	Mass Flow Rate of Inlet Water (lb/min)	Heat Output, Btu
1417	226.005	227.835		0.16	0.16	1.32	1.05	0.24	79	79	68	1.97	1.40	73	0.014	99	99	25.3	0.14	0.41		124.2	188.4	186.0	63.6	187.8	186	70	71	68		1.001	3.413	425
1418	226.168	227.997		0.16	0.16	1.31	1.06	0.24	80	79	68	1.97	1.40	73	0.014	100	100	25.4	-0.14	0.35		124.2	188.4	186.1	63.5	187.7	182	70	71	68		1.001	2.931	364
1419	226.329	228.157		0.16	0.16	1.31	1.05	0.24	80	79	68	1.96	1.40	73	0.014	100	99	25.2	0.20	0.41		124.4	188.4	186.0	63.4	187.8	179	70	71	68		1.001	3.416	426
1420	226.489	228.318		0.16	0.16	1.32	1.05	0.24	79	79	68	1.95	1.40	73	0.015	96	96	25.3	-0.09	0.41		124.3	188.3	185.9	63.3	187.6	176	70	70	68		1.001	3.416	425
1421	226.648	228.478		0.16	0.16	1.32	1.06	0.24	79	79	68	1.97	1.40	73	0.015	96	96	25.2	0.05	0.37		124.2	188.2	186.1	63.4	187.7	173	70	70	68		1.001	3.093	385
1422	226.808	228.640		0.16	0.16	1.31	1.06	0.24	79	79	68	1.96	1.40	73	0.015	96	97	25.3	-0.02	0.39		124.2	188.1	186.1	63.4	187.6	170	70	70	68		1.001	3.252	404
1423	226.967	228.800		0.16	0.16	1.31	1.05	0.24	80	79	68	1.96	1.40	73	0.014	99	99	25.4	-0.09	0.37		124.2	188.1	186.1	63.3	187.5	167	70	70	68		1.001	3.089	384
1424	227.127	228.961		0.16	0.16	1.31	1.05	0.24	79	79	68	1.95	1.40	73	0.015	96	96	25.3	0.06	0.41		124.3	188.1	185.9	63.3	187.5	164	70	70	68		1.001	3.415	425
1425	227.286	229.122		0.16	0.16	1.31	1.06	0.24	79	79	68	1.96	1.40	73	0.014	99	100	25.3	-0.03	0.39		124.2	187.9	185.8	63.3	187.4	162	70	70	68		1.001	3.255	405
1426	227.446	229.282		0.16	0.16	1.32	1.05	0.24	79	79	67	1.96	1.40	73	0.015	96	96	25.4	-0.08	0.37		124.1	187.9	185.7	63.3	187.3	160	70	70	67		1.001	3.095	384
1427	227.606	229.443		0.16	0.16	1.32	1.06	0.24	79	79	68	1.97	1.40	73	0.014	100	100	25.2	0.20	0.39		124.0	187.8	185.6	63.3	187.2	158	70	70	68		1.001	3.254	404
1428	227.766	229.604		0.16	0.16	1.32	1.05	0.24	79	79	68	1.96	1.40	73	0.014	100	100	25.4	-0.20	0.37		123.8	187.7	185.5	63.3	187.2	155	70	70	68		1.001	3.090	383
1429	227.925	229.765		0.16	0.16	1.32	1.05	0.24	79	79	68	1.95	1.40	73	0.014	99	100	25.1	0.27	0.39		123.8	187.6	185.4	63.4	187.1	153	70	70	68		1.001	3.252	403
1430	228.085	229.925		0.16	0.16	1.32	1.05	0.24	79	79	68	1.96	1.40	73	0.015	96	96	25.3	-0.15	0.37		123.7	187.4	185.2	63.4	187.1	151	70	70	68		1.001	3.093	383
1431	228.245	230.085		0.16	0.16	1.31	1.05	0.24	79	79	68	1.97	1.40	73	0.013	104	103	25.3	-0.05	0.37		123.5	187.3	185.1	63.4	186.9	149	69	70	68		1.001	3.090	382
1432	228.405	230.247		0.16	0.16	1.32	1.05	0.24	79	79	68	1.96	1.40	73	0.015	96	97	25.2	0.11	0.31		123.4	187.1	184.9	63.3	186.7	147	69	70	68		1.001	2.615	323
1433	228.565	230.407		0.16	0.16	1.32	1.05	0.24	80	79	68	1.95	1.40	73	0.015	96	96	25.3	-0.10	0.30		123.3	187.1	185.3	63.3	186.6	145	69	69	68		1.001	2.457	303
1434	228.725	230.568		0.16	0.16	1.32	1.06	0.24	79	79	68	1.97	1.40	73	0.015	96	96	25.4	-0.07	0.31		123.2	187.1	185.3	63.3	186.5	143	69	69	68		1.001	2.614	322
1435	228.885	230.729		0.16	0.16	1.31	1.06	0.24	79	79	68	1.96	1.40	73	0.014	100	100	25.2	0.24	0.30		123.2	187.1	185.3	63.3	186.5	141	69	69	68		1.001	2.458	303
1436	229.044	230.890		0.16	0.16	1.31	1.05	0.24	80	79	68	1.97	1.40	73	0.015	96	96	25.4	-0.22	0.28		123.1	187.0	185.2	63.3	186.4	140	69	69	68		1.001	2.300	284
1437	229.204	231.050		0.16	0.16	1.32	1.06	0.24	79	79	68	1.97	1.40	73	0.016	93	93	25.4	0.02	0.33		123.0	186.9	184.6	63.2	186.2	139	69	69	68		1.001	2.773	341
1438	229.364	231.211		0.16	0.16	1.31	1.06	0.24	80	79	68	1.95	1.40	73	0.015	96	96	25.4	0.00	0.32		123.0	186.8	184.9	63.3	186.2	137	69	69	68		1.001	2.683	330
1439	229.523	231.372		0.16	0.16	1.31	1.05	0.24	79	79	68	1.96	1.40	73	0.015	96	96	25.2	0.15	0.33		122.9	186.8	184.9	63.3	186.3	135	69	69	68		1.001	2.775	342
1440	229.682	231.532		0.16	0.16	1.31	1.04	0.24	79	79	68	1.98	1.50	82	0.015	97	97	25.2	0.00	0.31		122.8	186.7	184.8	63.4	186.1	156	70	71	68		1.001	2.612	321
1441	229.842	231.692		0.16	0.16	1.32	1.06	0.24	79	79	68	1.95	1.40	80	0.014	100	100	25.0	0.18	0.33		122.5	186.5	184.6	63.4	185.9	183	69	69	68		1.001	2.787	342
1442	230.002	231.853		0.16	0.16	1.32	1.06	0.24	79	79	68	1.96	1.40	74	0.015	97	96	25.0	0.02	0.31		122.3	186.4	184.6	63.4	185.7	170	69	69	68		1.001	2.612	320
1443	230.162	232.014		0.16	0.16	1.32	1.06	0.24	79	79	68	1.96	1.40	73	0.015	96	96	25.0	-0.03	0.33		122.3	186.4	184.6	63.4	185.7	157	69	69	68		1.001	2.771	339
1444	230.322	232.175		0.16	0.16	1.32	1.06	0.24	79	79	68	1.96	1.40	73	0.015	96	96	25.1	-0.02	0.33		122.3	186.3	184.5	63.4	185.7	149	69	69	68		1.001	2.769	339
1445	230.483	232.336		0.16	0.16	1.32	1.05	0.24	79	79	68	1.96	1.40	72	0.014	100	100	24.9	0.20	0.31		122.3	186.2	184.4	63.4	185.7	144	69	69	68		1.001	2.612	320
1446	230.643	232.497		0.16	0.16	1.32	1.05	0.24	80	79	68	1.96	1.40	72	0.014	100	100	24.8	0.04	0.29		122.0	186.2	184.4	63.4	185.4	140	69	69	68		1.001	2.454	300
1447	230.803	232.658		0.16	0.16	1.32	1.06	0.24	79	79	68	1.96	1.40	72	0.014	100	100	24.9	-0.06	0.31		121.8	186.1	184.3	63.5	185.3	137	69	69	68		1.001	2.616	319
1448	230.963	232.819		0.16	0.16	1.32	1.06	0.24	79	79	68	1.96	1.40	72	0.014	100	100	25.0	-0.12	0.33		122.0	186.1	184.3	63.5	185.4	135	69	69	68		1.001	2.775	339
1449	231.123	232.980		0.16	0.16	1.31	1.06	0.24	79	79	68	1.96	1.40	72	0.014	100	100	25.1	-0.07	0.33		122.1	185.9	184.2	63.5	185.6	133	69	69	68		1.001	2.773	339
1450	231.282	233.141		0.16	0.16	1.32	1.06	0.24	79	79	68	1.96	1.40	72	0.014	99	100	24.9	0.18	0.33		121.6	185.8	184.0	63.5	185.1	131	69	69	68		1.001	2.776	338
1451	231.442	233.302		0.16	0.16	1.32	1.06	0.24	79	79	68	1.95	1.40	72	0.015	96	96	25.1	-0.17	0.35		121.6	185.8	184.0	63.5	185.2	129	69	69	68		1.001	2.936	358
1452	231.602	233.463		0.16	0.16	1.31	1.06	0.24	79	79	68	1.96	1.40	72	0.016	93	93	25.0	0.05	0.31		121.5	185.7	183.8	63.5	185.0	128	69	69	68		1.001	2.615	318
1453	231.762	233.624		0.16	0.16	1.31	1.05	0.24	79	79	68	1.96	1.40	72	0.014	100	100	24.8	0.21	0.35		121.4	185.6	183.8	63.5	184.9	126	69	69	68		1.001	2.928	356
1454	231.922	233.785		0.16	0.16	1.32	1.06	0.24	79	79	68	1.95	1.40	72	0.014	100	100	25.0	-0.18	0.30		121.6	185.5	183.7	63.5	185.0	125	69	69	68		1.001	2.460	299
1455	232.082	233.946		0.16	0.16	1.32	1.06	0.24	80	79	68	1.96	1.40	72	0.015	96	96	25.0	-0.04	0.31		121.3	185.3	183.5	63.4	184.7	124	69	69	68		1.001	2.619	318
1456	232.242	234.108		0.16	0.16	1.32	1.06	0.24	79	79	68	1.95	1.40	72	0.014	100	100	25.1	-0.05	0.29		121.3	185.3	183.5	63.4	184.7	122	69	69	68		1.001	2.456	298
1457	232.402	234.268		0.16	0.16	1.32	1.06	0.24	79	79	68	1.96	1.40	72	0.014	100	99	25.0	0.10	0.34		121.1	185.2	183.4	63.3	184.4	121	69	69	68		1.001	2.816	341
1458	232.562	234.429		0.16	0.16	1.33	1.06	0.24	80	79	68	1.96	1.40	72	0.014	100	100	25.0	-0.05	0.34		121.2	185.1	183.3	63.3	184.4	121	69	69	68		1.001	2.864	347
1459	232.723	234.591		0.16	0.16	1.32	1.06	0.24	80	79	68	1.95	1.40	73	0.016	94	94	25.0	0.06	0.34		121.1	185.0	183.2	63.2	184.3	119	69	69	68		1.001	2.831	343
1460	232.883	234.752		0.16	0.16	1.32	1.06	0.24	80	79	68	1.96	1.40	75	0.013	104	104	24.9	0.05	0.33		121.1	184.9	183.2	63.2	184.3	119	69	69	68		1.001	2.776	337
1461	233.043	234.912		0.16	0.16	1.31	1.06	0.24	80	79	68	1.96	1.40	72	0.013	103	103	24.9	0.00	0.32		120.9	184.8	183.0	63.2	184.1	118	69	69	68		1.001	2.695	326
1462	233.203	235.074		0.16	0.16	1.32	1.06	0.24	80	79	68	1.95	1.40	72	0.014	100	100	24.9	-0.04	0.33		121.1	184.7	182.9	63.1	184.2	116	69	69	68		1.001	2.776	336
1463	233.363	235.236		0.16	0.16	1.31	1.06	0.24	80	79	68	1.95	1.40	71	0.015	96	97	25.1	-0.12	0.35		120.6	184.6	182.8	63.1	183.8	116	69	69	68		1.001	2.939	355
1464	233.523	235.396		0.16	0.16	1.31	1.06	0.24	80	79	68	1.96	1.40	71	0.015	96	96	25.0	0.04	0.31		120.7	184.5	182.7	63.1	183.8	115	69	69	68		1.001	2.618	316
1465	233.683	235.556		0.16	0.16	1.31	1.06	0.24	80	79	68	1.96	1.40	71	0.014	99	99	24.9	0.10	0.33		120.7	184.4	182.5	62.9	183.6	114	69	69	68		1.001	2.777	336
1466	233.843	235.718		0.16	0.16	1.32	1.06	0.24	80	79	67	1.95	1.40	71	0.014	99	100	24.8	0.11	0.31		120.8	184.2	182.4	62.7	183.6	113	69	69	67		1.001	2.620	317
1467	234.003	235.879		0.16	0.16	1.32	1.06	0.24	80	79	67	1.94	1.40	70	0.015	96	96	25.0	-0.13	0.35		120.9	184.1	182.3	62.5	183.4	112	69	69	67		1.001	2.933	355
1468	234.163	236.040		0.16	0.16	1.32	1.06	0.24	80	79	67	1.96	1.40	70	0.015	96	96	24.7	0.23	0.35		121.2	184.0	182.2	62.3	183.5	111	68	69	67		1.001	2.940	357
1469	234.323	236.201		0.16	0.16	1.32	1.06	0.24	80	79	67	1.95	1.40	70	0.014	99	99	24.9	-0.20	0.37		121.1	183.8	182.0	62.0	183.1	110	68	69	67		1.001	3.101	376
1470	234.483	236.363		0.16	0.16	1.32	1.06	0.24	80	79	67	1.94	1.40	70	0.016	93	94	24.9	0.02	0.31		121.1	183.7	181.9	61.9	183.0	110	68	68	67		1.001	2.621	318
1471	234.643	236.524		0.16	0.16	1.32	1.06	0.24	80	79	67	1.95	1.40	71	0.015	96	96	25.0	-0.11	0.29		121.4	183.6	181.7	61.7	183.1	109	68	69	67		1.001	2.456	298
1472	234.802	236.684		0.16	0.16	1.32	1.06	0.24	80	79	66	1.95	1.40	77	0.014	99	99	24.8	0.18	0.33		121.1	183.5	181.5	61.7	182.8	147	68	69	66		1.001	2.776	337
1473	234.962	236.846		0.16	0.16	1.32	1.06	0.24	80	79	66	1.96	1.40	72	0.013	103	104	24.7	0.13	0.30		120.9	183.3	181.3	61.7	182.7	158	68	68	66		1.001	2.463	298
1474	235.123	237.007		0.16	0.16	1.33	1.06	0.24	80	79	66	1.96	1.40	70	0.014	100	99	24.8	-0.15	0.33		120.7	183.2	181.1	61.8	182.6	140	68	68	66		1.001	2.773	335
1475	235.283	237.169		0.16	0.16	1.32	1.06	0.24	80	79	66	1.96	1.40	69	0.014	99	100	24.8	0.05	0.31		120.6	183.0	180.8	61.8	182.4	130	68	68	66		1.001	2.619	316
1476	235.443	237.330		0.16	0.16	1.32	1.07	0.24	80	79	66	1.96	1.40	69	0.015	96	96	24.8	-0.04	0.33		120.4	182.9	180.6	61.8	182.2	124	68	68	66		1.001	2.773	334
1477	235.603	237.492		0.16	0.16	1.32	1.07	0.24	80	79	66	1.96	1.40	68	0.013	103	104	24.9	-0.02	0.33		120.3	182.7	180.2	61.9	182.2	120	68	68	66		1.001	2.775	334
1478	235.763	237.654		0.16	0.16	1.32	1.06	0.24	79	79	66	1.95	1.40	68	0.014	99	100	24.8	0.06	0.32		120.1	182.6	180.0	61.8	181.9	118	67	68	66		1.001	2.643	318

Elapsed Time	Particulate Sampling Data																	Fuel Weight, lb		Flow, gpm		Temperature Data, oF												
	Gas Meter Cubic Feet (1)	Gas Meter Cubic Feet (2)	Gas Meter Cubic Feet (amb)	Sample Rate, cfm (1)	Sample Rate, cfm (2)	Orifice dH (1)	Orifice dH (2)	Orifice dH (amb)	Meter oF (1)	Meter oF (2)	Meter oF (amb)	Meter Vac. in. Hg. (1)	Meter Vac. in. Hg. (2)	Dilution Tunnel Temp.	Dilution Tunnel dP	Pro. Rate (%) (1)	Pro. Rate (%) (2)	Scale Reading	Weight Change	Load Side Liquid Flow Rate	Boiler Side Liquid Flow Rate (optional)	Thermopile ΔT	Boiler to Heat Exch. Temp.	Heat Exch to Boiler Temp.	Inlet Load Temp.	Outlet Load Temp.	Stack	Filter (1)	Filter (2)	Ambient		Specific Heat of Inlet Water (BTU/lb-°F)	Mass Flow Rate of Inlet Water (lb/min)	Heat Output, Btu
1479	235.923	237.815		0.16	0.16	1.31	1.07	0.24	80	79	66	1.96	1.40	68	0.013	103	103	24.8	0.03	0.31		119.7	182.4	179.6	61.9	181.7	115	67	68	66		1.001	2.617	314
1480	236.083	237.976		0.16	0.16	1.31	1.06	0.24	79	79	65	1.96	1.40	68	0.009	124	124	24.7	0.09	0.33		119.6	182.3	179.3	62.0	181.6	113	67	67	65		1.001	2.759	334
1481	236.243	238.139		0.16	0.16	1.31	1.07	0.24	79	79	65	1.96	1.40	68	0.009	124	125	24.8	-0.15	0.28		119.1	182.2	179.0	62.4	181.5	112	67	67	65		1.001	2.315	276
1482	236.403	238.300		0.16	0.16	1.32	1.06	0.24	79	79	65	1.95	1.40	68	0.014	99	99	24.7	0.11	0.33		118.3	182.0	178.8	62.9	181.2	111	67	67	65		1.001	2.754	326
1483	236.563	238.461		0.16	0.16	1.32	1.07	0.24	79	79	65	1.94	1.40	67	0.014	99	99	24.8	-0.05	0.30		116.4	181.9	178.5	64.6	181.0	110	67	67	65		1.001	2.510	293
1484	236.723	238.623		0.16	0.16	1.32	1.07	0.24	79	79	65	1.96	1.40	68	0.015	96	96	24.8	-0.02	0.32		114.8	181.8	178.4	65.9	180.7	109	67	67	65		1.001	2.644	304
1485	236.883	238.785		0.16	0.16	1.32	1.06	0.24	79	79	65	1.96	1.40	67	0.014	99	100	24.8	0.02	0.33		113.9	181.7	178.3	66.9	180.8	108	67	67	65		1.001	2.778	317
1486	237.043	238.947		0.16	0.16	1.32	1.06	0.24	79	79	65	1.95	1.40	67	0.014	99	100	24.8	0.01	0.35		113.1	181.6	178.2	67.5	180.6	108	67	67	65		1.001	2.938	333
1487	237.204	239.108		0.16	0.16	1.33	1.07	0.24	79	79	65	1.94	1.40	67	0.015	96	96	24.9	-0.11	0.31		113.1	181.5	178.0	67.3	180.3	107	67	67	65		1.001	2.618	296
1488	237.364	239.270		0.16	0.16	1.33	1.07	0.24	79	79	65	1.96	1.40	67	0.013	103	104	24.8	0.09	0.28		113.4	181.3	177.9	66.9	180.3	106	66	67	65		1.001	2.302	261
1489	237.524	239.432		0.16	0.16	1.32	1.07	0.24	79	79	65	1.94	1.40	67	0.014	99	100	24.9	-0.09	0.35		113.0	181.2	177.8	67.3	180.3	106	66	67	65		1.001	2.938	332
1490	237.685	239.593		0.16	0.16	1.33	1.07	0.24	79	79	64	1.95	1.40	67	0.014	100	99	24.8	0.10	0.33		113.2	181.0	177.6	66.9	180.1	105	66	66	64		1.001	2.779	315
1491	237.845	239.755		0.16	0.16	1.32	1.07	0.24	79	78	64	1.94	1.40	67	0.014	99	100	24.9	-0.13	0.30		113.1	180.9	177.5	66.8	179.9	104	66	66	64		1.001	2.464	279
1492	238.006	239.917		0.16	0.16	1.32	1.07	0.24	79	78	64	1.95	1.40	67	0.015	96	97	24.7	0.16	0.35		113.3	180.7	177.3	66.6	179.9	103	66	66	64		1.001	2.939	333
1493	238.166	240.079		0.16	0.16	1.33	1.07	0.24	79	78	64	1.95	1.40	67	0.015	96	97	24.9	-0.16	0.31		113.2	180.6	177.2	66.4	179.6	102	66	66	64		1.001	2.619	297
1494	238.326	240.241		0.16	0.16	1.32	1.06	0.24	79	78	64	1.95	1.40	67	0.013	103	104	24.8	0.08	0.33		112.6	180.5	177.1	66.8	179.4	101	66	66	64		1.001	2.780	313
1495	238.486	240.402		0.16	0.16	1.32	1.07	0.24	79	78	64	1.94	1.40	67	0.012	107	107	24.8	0.02	0.32		113.1	180.4	177.0	66.3	179.4	101	66	66	64		1.001	2.623	297
1496	238.646	240.564		0.16	0.16	1.32	1.07	0.24	79	78	64	1.94	1.40	67	0.015	96	97	24.9	-0.05	0.33		113.1	180.2	176.8	66.1	179.2	101	66	66	64		1.001	2.780	315
1497	238.806	240.726		0.16	0.16	1.32	1.06	0.24	79	78	64	1.95	1.40	67	0.014	99	100	24.9	-0.01	0.35		112.8	180.1	176.7	66.3	179.2	100	66	66	64		1.001	2.941	332
1498	238.966	240.888		0.16	0.16	1.33	1.07	0.24	79	78	64	1.94	1.40	67	0.013	103	104	24.7	0.12	0.33		112.5	180.0	176.5	66.3	178.9	100	65	66	64		1.001	2.781	313
1499	239.126	241.049		0.16	0.16	1.32	1.07	0.24	79	78	64	1.94	1.40	66	0.014	99	99	24.7	0.00	0.33		112.7	179.8	176.4	66.1	178.8	99	65	66	64		1.001	2.782	314
1500	239.287	241.211		0.16	0.16	1.33	1.07	0.24	79	78	64	1.95	1.40	66	0.015	96	96	24.8	-0.09	0.35		112.6	179.7	176.3	66.1	178.7	98	65	66	64		1.001	2.942	332
1501	239.446	241.374		0.16	0.16	1.33	1.07	0.24	79	78	64	1.94	1.40	66	0.016	92	94	24.8	0.06	0.33		112.7	179.5	176.1	65.8	178.5	98	65	65	64		1.001	2.781	314
1502	239.606	241.535		0.16	0.16	1.33	1.07	0.24	79	78	64	1.94	1.40	66	0.014	99	99	24.8	-0.06	0.35		111.9	179.4	176.0	66.5	178.4	97	65	65	64		1.001	2.923	328
1503	239.767	241.697		0.16	0.16	1.32	1.07	0.24	79	78	64	1.95	1.40	70	0.014	100	100	24.9	-0.02	0.33		112.3	179.3	175.9	66.0	178.3	120	66	66	64		1.001	2.783	313
1504	239.927	241.858		0.16	0.16	1.33	1.07	0.24	79	78	64	1.95	1.40	71	0.015	96	96	24.8	0.05	0.36		111.6	179.1	175.7	66.5	178.1	144	65	66	64		1.001	2.964	331
1505	240.087	242.021		0.16	0.16	1.33	1.07	0.24	78	78	64	1.94	1.40	67	0.013	103	104	24.7	0.09	0.35		112.0	179.0	175.6	66.1	178.1	135	65	65	64		1.001	2.940	330
1506	240.247	242.182		0.16	0.16	1.33	1.07	0.24	78	78	64	1.94	1.40	67	0.013	103	103	24.8	-0.02	0.36		111.3	178.8	175.4	66.5	177.8	123	65	65	64		1.001	2.984	333
1507	240.408	242.343		0.16	0.16	1.32	1.07	0.24	78	78	64	1.94	1.40	66	0.014	100	99	24.8	-0.03	0.32		111.2	178.7	175.3	66.5	177.7	115	65	65	64		1.001	2.622	292
1508	240.568	242.505		0.16	0.16	1.33	1.07	0.24	78	77	63	1.94	1.40	67	0.014	99	100	24.9	-0.08	0.33		111.4	178.5	175.2	66.3	177.7	110	65	65	63		1.001	2.782	310
1509	240.729	242.668		0.16	0.16	1.33	1.07	0.24	78	78	64	1.94	1.40	67	0.014	100	101	24.9	0.02	0.32		111.4	178.4	175.1	66.1	177.5	107	65	65	64		1.001	2.628	293
1510	240.889	242.829		0.16	0.16	1.33	1.07	0.24	78	77	63	1.94	1.40	66	0.013	103	103	24.8	0.01	0.37		111.3	178.3	174.9	66.0	177.3	105	65	65	63		1.001	3.107	346
1511	241.049	242.991		0.16	0.16	1.33	1.07	0.24	78	77	63	1.94	1.40	66	0.014	99	100	24.8	0.02	0.33		111.5	178.2	174.8	65.7	177.2	103	65	65	63		1.001	2.783	311
1512	241.209	243.153		0.16	0.16	1.32	1.07	0.24	78	77	63	1.94	1.40	66	0.014	99	100	24.9	-0.07	0.33		111.3	178.0	174.7	65.9	177.2	102	65	65	63		1.001	2.784	310
1513	241.369	243.315		0.16	0.16	1.33	1.07	0.24	78	77	63	1.94	1.40	66	0.013	103	104	24.8	0.12	0.33		111.1	177.9	174.6	65.9	177.0	101	65	65	63		1.001	2.784	310
1514	241.529	243.476		0.16	0.16	1.33	1.07	0.24	78	77	63	1.94	1.40	66	0.014	99	99	24.8	-0.04	0.33		111.1	177.7	174.4	65.6	176.7	100	65	65	63		1.001	2.782	309
1515	241.689	243.638		0.16	0.16	1.32	1.07	0.24	78	77	63	1.94	1.40	66	0.012	107	108	24.8	0.02	0.30		110.5	177.5	174.2	66.1	176.6	99	65	65	63		1.001	2.464	273
1516	241.849	243.800		0.16	0.16	1.32	1.07	0.24	78	77	63	1.94	1.40	66	0.014	99	100	24.5	0.26	0.32		110.4	177.4	174.1	66.0	176.4	98	64	65	63		1.001	2.626	290
1517	242.009	243.962		0.16	0.16	1.32	1.07	0.24	78	77	63	1.96	1.40	66	0.015	96	97	24.8	-0.28	0.33		110.4	177.3	174.0	65.9	176.4	98	64	65	63		1.001	2.785	308
1518	242.169	244.124		0.16	0.16	1.33	1.07	0.24	78	77	63	1.95	1.40	66	0.015	96	97	24.8	0.03	0.33		110.4	177.2	173.9	65.9	176.3	97	64	65	63		1.001	2.786	308
1519	242.329	244.285		0.16	0.16	1.33	1.07	0.24	78	77	63	1.94	1.40	66	0.014	99	99	24.9	-0.08	0.32		110.5	177.0	173.7	65.6	176.1	96	64	65	63		1.001	2.623	290
1520	242.490	244.447		0.16	0.16	1.33	1.08	0.24	78	77	63	1.94	1.40	66	0.014	100	100	24.9	-0.01	0.30		110.1	176.8	173.5	65.9	175.9	96	64	65	63		1.001	2.468	272
1521	242.649	244.609		0.16	0.16	1.33	1.07	0.24	78	77	63	1.94	1.40	66	0.013	102	104	25.0	-0.12	0.32		109.9	176.7	173.4	65.8	175.7	95	64	64	63		1.001	2.626	289
1522	242.810	244.771		0.16	0.16	1.33	1.07	0.24	78	77	63	1.93	1.40	66	0.012	108	108	24.9	0.11	0.37		110.3	176.5	173.2	65.4	175.7	95	64	64	63		1.001	3.102	342
1523	242.970	244.932		0.16	0.16	1.33	1.07	0.24	78	77	63	1.95	1.40	66	0.016	93	93	24.7	0.22	0.33		109.8	176.4	173.3	65.5	175.3	94	64	64	63		1.001	2.787	306
1524	243.131	245.094		0.16	0.16	1.33	1.07	0.24	78	77	63	1.95	1.40	66	0.016	93	94	24.8	-0.09	0.32		109.3	176.3	173.0	66.1	175.4	94	64	64	63		1.001	2.624	287
1525	243.291	245.256		0.16	0.16	1.32	1.07	0.24	78	77	63	1.93	1.40	66	0.013	103	104	25.0	-0.25	0.33		109.9	176.1	172.9	65.3	175.2	93	64	64	63		1.001	2.772	305
1526	243.451	245.418		0.16	0.16	1.32	1.07	0.24	78	77	63	1.95	1.40	66	0.014	99	100	24.8	0.21	0.33		109.3	175.9	172.7	65.6	174.9	93	64	64	63		1.001	2.783	305
1527	243.611	245.579		0.16	0.16	1.32	1.07	0.24	78	77	63	1.95	1.40	65	0.013	103	103	24.9	-0.05	0.38		109.5	175.8	172.6	65.4	174.9	92	64	64	63		1.001	3.191	350
1528	243.771	245.742		0.16	0.16	1.32	1.07	0.24	78	77	63	1.95	1.40	65	0.013	103	104	24.9	-0.03	0.35		109.5	175.7	172.5	65.3	174.8	92	64	64	63		1.001	2.936	322
1529	243.931	245.903		0.16	0.16	1.32	1.07	0.24	78	77	63	1.94	1.40	65	0.014	99	99	24.8	0.09	0.33		109.4	175.6	172.3	65.3	174.7	92	64	64	63		1.001	2.787	305
1530	244.091	246.065		0.16	0.16	1.32	1.07	0.24	77	77	63	1.94	1.40	65	0.015	96	97	24.8	-0.03	0.35		109.3	175.4	172.1	65.2	174.5	91	64	64	63		1.001	2.947	323
1531	244.251	246.227		0.16	0.16	1.32	1.07	0.24	78	77	63	1.95	1.40	65	0.014	99	100	24.9	-0.04	0.35		109.1	175.3	172.1	65.2	174.4	91	64	64	63		1.001	2.944	322
1532	244.411	246.389		0.16	0.16	1.33	1.07	0.24	77	76	63	1.95	1.40	65	0.014	99	100	24.8	0.06	0.33		109.2	175.1	171.9	65.1	174.3	90	64	64	63		1.001	2.788	305
1533	244.571	246.550		0.16	0.16	1.33	1.06	0.24	77	76	63	1.95	1.40	65	0.014	99	100	24.8	-0.01	0.32		108.7	175.0	171.7	65.3	174.1	90	64	64	63		1.001	2.629	286
1534	244.731	246.712		0.16	0.16	1.33	1.07	0.24	77	76	63	1.94	1.40	67	0.012	108	108	24.9	-0.03	0.33		108.5	174.9	171.6	65.4	173.9	89	64	64	63		1.001	2.788	303
1535	244.891	246.874		0.16	0.16	1.33	1.07	0.24	77	76	63	1.94	1.40	71	0.015	97	97	24.9	-0.02	0.33		108.3	174.7	171.5	65.6	173.9	121	64	64	63		1.001	2.788	302
1536	245.051	247.036		0.16	0.16	1.33	1.06	0.24	77	76	63	1.95	1.40	68	0.016	93	94	24.9	0.01	0.32		107.9	174.5	171.3	65.9	173.8	138	64	64	63		1.001	2.628	284
1537	245.211	247.197		0.16	0.16	1.33	1.06	0.24	77	76	63	1.95	1.40	67	0.014	100	100	24.8	0.04	0.37		108.1	174.3	171.1	65.3	173.4	121	64	64	63		1.001	3.109	336
1538	245.371	247.358		0.16	0.16	1.33	1.07	0.24	77	76	63	1.94	1.40	66	0.015	96	96	24.8	0.00	0.32		107.5	174.2	171.0	65.7	173.2	112	64	64	63		1.001	2.624	283
1539	245.532	247.520		0.16	0.16	1.32	1.07	0.24	77	76	63	1.94	1.40	66	0.015	97	97	24.8	0.00	0.32		107.5	174.1	170.9	65.7	173.2	106	64	64	63		1.001	2.628	283
1540	245.692	247.683		0.16	0.16	1.33	1.07	0.24	77	76	63	1.93	1.40	66	0.013	103	105	24.8	0.05	0.34		107.8	174.0	170.7	65.3	173.1	102	64	64	63		1.001	2.759	301

Elapsed Time	Particulate Sampling Data																	Fuel Weight, lb		Flow, gpm		Temperature Data, oF												
	Gas Meter Cubic Feet (1)	Gas Meter Cubic Feet (2)	Gas Meter Cubic Feet (amb)	Sample Rate, cfm (1)	Sample Rate, cfm (2)	Orifice dH (1)	Orifice dH (2)	Orifice dH (amb)	Meter oF (1)	Meter oF (2)	Meter oF (amb)	Meter Vac. in. Hg. (1)	Meter Vac. in. Hg. (2)	Dilution Tunnel Temp.	Dilution Tunnel dP	Pro. Rate (%) (1)	Pro. Rate (%) (2)	Scale Reading	Weight Change	Load Side Liquid Flow Rate	Boiler Side Liquid Flow Rate (optional)	Thermopile ΔT	Boiler to Heat Exch. Temp.	Heat Exch to Boiler Temp.	Inlet Load Temp.	Outlet Load Temp.	Stack	Filter (1)	Filter (2)	Ambient		Specific Heat of Inlet Water (BTU/lb-°F)	Mass Flow Rate of Inlet Water (lb/min)	Heat Output, Btu
1541	245.852	247.844		0.16	0.16	1.33	1.06	0.24	77	76	63	1.95	1.40	67	0.014	100	100	25.0	-0.26	0.34		107.2	173.8	170.6	65.7	172.9	100	64	64	63		1.001	2.791	299
1542	246.012	248.005		0.16	0.16	1.32	1.06	0.24	77	76	64	1.95	1.40	67	0.015	96	96	24.9	0.10	0.35		106.9	173.7	170.5	65.8	172.7	98	64	64	64		1.001	2.940	315
1543	246.172	248.167		0.16	0.16	1.33	1.07	0.24	77	76	64	1.95	1.40	67	0.016	93	94	24.7	0.19	0.31		106.6	173.5	170.3	66.0	172.5	97	64	64	64		1.001	2.618	279
1544	246.332	248.329		0.16	0.16	1.32	1.07	0.24	77	76	64	1.93	1.40	67	0.013	103	104	25.0	-0.21	0.34		106.2	173.4	170.2	66.1	172.3	96	64	64	64		1.001	2.790	297
1545	246.492	248.490		0.16	0.16	1.32	1.06	0.24	77	76	64	1.95	1.40	67	0.014	100	100	24.9	0.07	0.32		105.7	173.2	170.1	66.5	172.3	95	64	64	64		1.001	2.648	280
1546	246.652	248.651		0.16	0.16	1.32	1.07	0.24	77	76	64	1.94	1.40	67	0.012	108	108	24.9	-0.06	0.33		106.1	173.1	170.0	66.2	172.3	93	64	64	64		1.001	2.789	296
1547	246.812	248.813		0.16	0.16	1.32	1.07	0.24	77	76	64	1.95	1.40	67	0.012	108	108	24.8	0.13	0.34		105.6	173.0	169.9	66.5	172.2	93	64	64	64		1.001	2.843	301
1548	246.972	248.975		0.16	0.16	1.33	1.07	0.24	77	76	64	1.95	1.40	68	0.014	100	100	24.8	0.01	0.30		105.6	172.8	169.7	66.3	171.9	92	64	65	64		1.001	2.470	261
1549	247.131	249.136		0.16	0.16	1.33	1.06	0.24	77	76	64	1.95	1.40	68	0.012	107	108	24.9	-0.09	0.35		105.4	172.7	169.6	66.6	171.9	92	64	65	64		1.001	2.950	311
1550	247.291	249.297		0.16	0.16	1.33	1.07	0.24	77	76	65	1.94	1.40	68	0.015	96	96	24.9	-0.01	0.32		104.8	172.5	169.4	66.8	171.7	91	64	65	65		1.001	2.626	276
1551	247.451	249.459		0.16	0.16	1.33	1.07	0.24	77	76	65	1.94	1.40	68	0.014	100	100	24.9	0.05	0.32		104.5	172.3	169.2	66.9	171.4	91	64	65	65		1.001	2.625	275
1552	247.611	249.621		0.16	0.16	1.33	1.06	0.24	77	76	65	1.96	1.40	68	0.013	103	104	24.8	0.06	0.33		104.4	172.2	169.1	66.9	171.2	90	65	65	65		1.001	2.787	291
1553	247.771	249.782		0.16	0.16	1.33	1.06	0.24	77	76	65	1.94	1.40	68	0.015	96	96	25.0	-0.15	0.35		104.5	172.1	169.0	66.8	171.3	90	65	65	65		1.001	2.947	308
1554	247.932	249.943		0.16	0.16	1.33	1.07	0.24	77	76	65	1.94	1.40	68	0.014	100	100	24.9	0.07	0.33		103.8	171.9	168.9	67.2	171.0	90	65	65	65		1.001	2.788	290
1555	248.092	250.105		0.16	0.16	1.32	1.06	0.24	77	76	65	1.96	1.40	68	0.013	103	104	24.9	-0.02	0.35		103.9	171.8	168.7	67.1	171.0	89	65	65	65		1.001	2.950	307
1556	248.252	250.266		0.16	0.16	1.32	1.06	0.24	77	76	65	1.94	1.40	68	0.015	96	96	24.8	0.08	0.35		103.3	171.6	168.6	67.6	170.8	89	65	65	65		1.001	2.946	305
1557	248.411	250.427		0.16	0.16	1.32	1.06	0.24	77	76	65	1.94	1.40	68	0.013	103	104	24.9	-0.06	0.32		103.2	171.5	168.5	67.5	170.7	89	65	65	65		1.001	2.626	271
1558	248.571	250.588		0.16	0.16	1.32	1.07	0.24	77	76	65	1.94	1.40	69	0.015	96	97	24.9	-0.04	0.33		103.3	171.4	168.3	67.2	170.5	88	65	65	65		1.001	2.784	288
1559	248.731	250.750		0.16	0.16	1.32	1.07	0.24	77	76	65	1.95	1.40	69	0.014	100	101	24.9	0.05	0.33		103.2	171.2	168.2	67.2	170.5	88	65	65	65		1.001	2.785	288
1560	248.891	250.911		0.16	0.16	1.33	1.06	0.24	77	76	65	1.94	1.40	69	0.013	104	104	24.9	-0.02	0.32		103.4	171.1	168.1	66.9	170.3	88	65	65	65		1.001	2.628	272
1561	249.051	251.072		0.16	0.16	1.33	1.07	0.24	77	76	65	1.95	1.40	69	0.014	100	100	24.9	-0.02	0.35		102.9	170.9	167.9	67.2	170.1	87	65	65	65		1.001	2.947	304
1562	249.210	251.234		0.16	0.16	1.32	1.07	0.24	77	76	65	1.94	1.40	69	0.012	107	109	24.8	0.11	0.30		102.4	170.9	167.8	67.6	170.0	87	65	65	65		1.001	2.472	253
1563	249.370	251.395		0.16	0.16	1.32	1.06	0.24	77	76	65	1.94	1.40	69	0.012	108	108	24.8	0.03	0.32		102.6	170.6	167.6	67.3	169.9	87	65	65	65		1.001	2.629	270
1564	249.530	251.556		0.16	0.16	1.32	1.07	0.24	77	76	65	1.93	1.40	69	0.013	104	104	24.9	-0.11	0.37		102.1	170.5	167.5	67.6	169.6	86	65	65	65		1.001	3.086	315
1565	249.690	251.717		0.16	0.16	1.33	1.06	0.24	77	76	65	1.94	1.40	69	0.012	108	108	24.9	0.02	0.36		101.9	170.4	167.3	67.7	169.6	86	65	66	65		1.001	2.985	304
1566	249.850	251.879		0.16	0.16	1.32	1.06	0.24	77	76	65	1.96	1.40	71	0.015	97	97	24.9	0.04	0.35		102.1	170.3	167.2	67.3	169.4	88	66	66	65		1.001	2.872	294
1567	250.010	252.040		0.16	0.16	1.33	1.06	0.24	77	76	65	1.95	1.40	73	0.015	97	97	24.9	-0.03	0.33		102.1	170.2	167.2	67.2	169.3	130	66	66	65		1.001	2.710	277
1568	250.170	252.201		0.16	0.16	1.33	1.06	0.24	77	76	65	1.94	1.40	70	0.013	104	104	24.9	0.02	0.31		101.7	170.0	167.0	67.5	169.2	127	66	66	65		1.001	2.553	260
1569	250.330	252.362		0.16	0.16	1.32	1.06	0.24	77	76	65	1.95	1.40	70	0.016	93	94	24.9	-0.07	0.31		101.7	169.9	166.9	67.2	169.0	113	66	66	65		1.001	2.552	260
1570	250.490	252.524		0.16	0.16	1.32	1.06	0.24	77	76	65	1.95	1.40	69	0.014	100	101	24.8	0.12	0.32		101.4	169.7	166.7	67.5	168.9	106	66	66	65		1.001	2.624	267
1571	250.649	252.685		0.16	0.16	1.31	1.07	0.24	77	76	65	1.95	1.40	69	0.015	96	97	24.8	-0.04	0.31		101.4	169.6	166.6	67.4	168.8	101	66	66	65		1.001	2.620	266
1572	250.809	252.846		0.16	0.16	1.32	1.07	0.24	77	76	65	1.95	1.40	69	0.012	108	108	25.0	-0.10	0.35		101.2	169.5	166.5	67.5	168.7	98	66	66	65		1.001	2.944	298
1573	250.969	253.008		0.16	0.16	1.32	1.06	0.24	77	76	65	1.95	1.40	69	0.015	96	97	24.8	0.14	0.32		100.8	169.3	166.4	67.6	168.5	97	66	66	65		1.001	2.625	265
1574	251.128	253.169		0.16	0.16	1.32	1.06	0.24	77	77	65	1.95	1.40	69	0.013	103	103	24.9	-0.09	0.33		100.5	169.2	166.2	68.0	168.5	96	66	66	65		1.001	2.784	280
1575	251.288	253.330		0.16	0.16	1.32	1.06	0.24	77	77	65	1.95	1.40	70	0.014	100	100	24.8	0.13	0.32		100.2	169.0	166.1	68.1	168.3	94	66	66	65		1.001	2.624	263
1576	251.448	253.491		0.16	0.16	1.32	1.06	0.24	77	77	65	1.95	1.40	69	0.015	96	96	24.9	-0.14	0.30		100.3	168.9	166.0	67.7	168.0	93	66	66	65		1.001	2.463	247
1577	251.607	253.653		0.16	0.16	1.32	1.06	0.24	77	77	65	1.95	1.40	70	0.015	96	97	24.9	0.00	0.31		99.8	168.8	165.9	68.1	167.9	92	66	66	65		1.001	2.621	262
1578	251.767	253.814		0.16	0.16	1.33	1.06	0.24	77	77	65	1.95	1.40	70	0.012	108	108	24.9	-0.03	0.32		99.2	168.6	165.7	68.5	167.7	92	66	66	65		1.001	2.626	261
1579	251.927	253.974		0.16	0.16	1.33	1.06	0.24	77	77	65	1.95	1.40	70	0.014	100	99	24.8	0.14	0.35		99.5	168.5	165.6	68.1	167.6	91	66	66	65		1.001	2.943	293
1580	252.087	254.136		0.16	0.16	1.33	1.06	0.24	77	77	65	1.95	1.40	70	0.013	104	104	24.9	-0.09	0.35		99.4	168.3	165.4	68.1	167.5	91	66	66	65		1.001	2.940	293
1581	252.247	254.297		0.16	0.16	1.33	1.06	0.24	77	77	66	1.94	1.40	70	0.014	100	100	25.0	-0.12	0.33		99.5	168.2	165.3	67.9	167.4	90	66	66	66		1.001	2.784	277
1582	252.407	254.458		0.16	0.16	1.32	1.06	0.24	77	77	66	1.94	1.40	70	0.012	108	108	24.9	0.15	0.31		98.8	168.0	165.1	68.3	167.1	90	66	66	66		1.001	2.617	259
1583	252.567	254.619		0.16	0.16	1.32	1.06	0.24	77	77	66	1.94	1.40	70	0.013	104	104	24.9	-0.02	0.33		98.6	167.9	165.0	68.5	167.1	89	66	66	66		1.001	2.782	275
1584	252.727	254.781		0.16	0.16	1.31	1.07	0.24	77	77	66	1.95	1.40	70	0.014	100	100	24.9	-0.03	0.33		98.5	167.8	164.8	68.4	166.8	89	66	66	66		1.001	2.767	273
1585	252.886	254.942		0.16	0.16	1.32	1.06	0.24	77	77	66	1.94	1.40	70	0.014	99	100	24.8	0.07	0.30		98.4	167.7	164.7	68.4	166.8	88	66	66	66		1.001	2.480	244
1586	253.046	255.103		0.16	0.16	1.32	1.06	0.24	77	77	66	1.95	1.40	70	0.015	96	96	24.9	-0.03	0.32		98.2	167.5	164.6	68.5	166.7	88	66	66	66		1.001	2.643	260
1587	253.206	255.264		0.16	0.16	1.32	1.06	0.24	77	77	66	1.94	1.40	70	0.013	104	104	24.8	0.06	0.32		98.2	167.4	164.4	68.3	166.5	87	66	66	66		1.001	2.623	258
1588	253.365	255.426		0.16	0.16	1.32	1.06	0.24	77	77	66	1.95	1.40	70	0.015	96	97	24.8	0.05	0.32		98.1	167.3	164.3	68.3	166.4	88	66	66	66		1.001	2.661	261
1589	253.525	255.586		0.16	0.16	1.32	1.06	0.24	77	77	66	1.94	1.40	70	0.014	100	99	24.9	-0.11	0.35		97.8	167.1	164.2	68.3	166.1	87	66	66	66		1.001	2.914	285
1590	253.685	255.748		0.16	0.16	1.32	1.07	0.24	77	77	66	1.95	1.40	70	0.015	96	97	24.8	0.04	0.33		97.9	167.0	164.0	68.2	166.1	87	66	66	66		1.001	2.782	273
1591	253.845	255.909		0.16	0.16	1.33	1.06	0.24	77	77	66	1.94	1.40	70	0.012	108	108	24.9	-0.06	0.35		97.8	166.8	163.9	68.1	165.9	86	66	67	66		1.001	2.942	288
1592	254.004	256.071		0.16	0.16	1.33	1.06	0.24	77	77	66	1.95	1.40	70	0.014	99	100	24.9	-0.05	0.33		97.4	166.7	163.8	68.3	165.7	86	66	67	66		1.001	2.783	271
1593	254.164	256.232		0.16	0.16	1.33	1.06	0.24	77	77	66	1.95	1.40	70	0.014	100	100	24.8	0.16	0.30		97.5	166.5	163.6	68.2	165.8	86	66	67	66		1.001	2.459	240
1594	254.325	256.393		0.16	0.16	1.33	1.06	0.24	77	77	66	1.94	1.40	70	0.016	94	93	24.7	0.08	0.37		97.7	166.4	163.5	68.0	165.7	86	66	67	66		1.001	3.095	303
1595	254.485	256.555		0.16	0.16	1.32	1.07	0.24	77	77	66	1.95	1.40	70	0.015	96	97	24.8	-0.15	0.33		97.3	166.3	163.4	68.2	165.5	85	67	67	66		1.001	2.779	271
1596	254.644	256.716		0.16	0.16	1.32	1.06	0.24	77	77	66	1.94	1.40	70	0.014	99	100	24.9	-0.02	0.33		96.9	166.1	163.2	68.4	165.3	86	67	67	66		1.001	2.780	270
1597	254.804	256.877		0.16	0.16	1.31	1.07	0.24	77	77	66	1.95	1.40	70	0.014	100	100	24.7	0.15	0.33		96.6	166.0	163.1	68.4	165.1	86	67	67	66		1.001	2.781	269
1598	254.964	257.038		0.16	0.16	1.31	1.06	0.24	77	77	66	1.94	1.40	73	0.014	100	100	24.8	-0.05	0.35		96.9	165.9	163.0	68.2	165.1	111	67	67	66		1.001	2.939	285
1599	255.123	257.200		0.16	0.16	1.32	1.06	0.24	77	77	66	1.95	1.40	74	0.015	96	97	24.7	0.01	0.33		96.6	165.7	162.9	68.3	164.9	133	67	67	66		1.001	2.780	269
1600	255.283	257.360		0.16	0.16	1.32	1.06	0.24	77	77	66	1.95	1.40	72	0.015	97	96	25.0	-0.22	0.33		96.3	165.6	162.7	68.3	164.6	138	67	67	66		1.001	2.781	268
1601	255.443	257.522		0.16	0.16	1.32	1.07	0.24	77	77	66	1.94	1.40	71	0.014	100	101	24.7	0.28	0.33		96.3	165.5	162.6	68.4	164.6	121	67	67	66		1.001	2.785	268
1602	255.602	257.683		0.16	0.16	1.32	1.06	0.24	78	77	66	1.96	1.40	71	0.015	96	97	24.9	-0.21	0.39		96.2	165.3	162.5	68.3	164.5	111	67	67	66		1.001	3.251	313

Elapsed Time	Particulate Sampling Data																	Fuel Weight, lb		Flow, gpm		Temperature Data, oF												
	Gas Meter Cubic Feet (1)	Gas Meter Cubic Feet (2)	Gas Meter Cubic Feet (amb)	Sample Rate, cfm (1)	Sample Rate, cfm (2)	Orifice dH (1)	Orifice dH (2)	Orifice dH (amb)	Meter oF (1)	Meter oF (2)	Meter oF (amb)	Meter Vac. in. Hg. (1)	Meter Vac. in. Hg. (2)	Dilution Tunnel Temp.	Dilution Tunnel dP	Pro. Rate (%) (1)	Pro. Rate (%) (2)	Scale Reading	Weight Change	Load Side Liquid Flow Rate	Boiler Side Liquid Flow Rate (optional)	Thermopile ΔT	Boiler to Heat Exch. Temp.	Heat Exch to Boiler Temp.	Inlet Load Temp.	Outlet Load Temp.	Stack	Filter (1)	Filter (2)	Ambient		Specific Heat of Inlet Water (BTU/lb-°F)	Mass Flow Rate of Inlet Water (lb/min)	Heat Output, Btu
1603	255.762	257.845		0.16	0.16	1.33	1.06	0.24	78	77	66	1.94	1.40	70	0.014	100	100	24.8	0.10	0.35		95.9	165.2	162.3	68.4	164.3	105	67	67	66		1.001	2.950	283
1604	255.922	258.005		0.16	0.16	1.32	1.06	0.24	78	77	66	1.95	1.40	70	0.016	93	93	24.8	-0.02	0.41		95.6	164.9	161.5	68.4	164.1	102	67	67	66		1.001	3.418	327
1605	256.082	256.167		0.16	0.16	1.32	1.06	0.24	78	77	66	1.94	1.40	70	0.015	96	97	24.6	0.20	0.39		95.7	164.7	161.3	68.2	163.9	99	67	67	66		1.001	3.246	311
1606	256.242	258.329		0.16	0.16	1.32	1.06	0.24	78	77	66	1.94	1.40	70	0.015	96	97	24.8	-0.24	0.54		95.8	164.5	161.0	67.9	163.7	97	67	67	66		1.001	4.468	428
1607	256.402	258.489		0.16	0.16	1.33	1.06	0.24	78	77	66	1.96	1.40	70	0.014	100	99	24.8	0.04	0.54		96.0	164.1	159.5	67.3	163.3	96	67	67	66		1.001	4.486	431
1608	256.562	258.650		0.16	0.16	1.33	1.06	0.24	78	77	66	1.94	1.40	70	0.015	96	96	24.8	0.05	0.50		96.5	163.7	159.2	66.5	162.9	95	67	67	66		1.001	4.176	403
1609	256.722	258.812		0.16	0.16	1.32	1.07	0.24	78	77	66	1.95	1.40	71	0.012	108	109	24.9	-0.16	0.51		96.2	163.5	158.9	66.3	162.6	94	67	67	66		1.001	4.230	407
1610	256.882	258.974		0.16	0.16	1.31	1.06	0.24	78	78	66	1.94	1.40	70	0.014	100	100	24.7	0.21	0.50		95.9	163.2	158.8	66.4	162.4	94	67	67	66		1.001	4.197	403
1611	257.042	259.134		0.16	0.16	1.31	1.06	0.24	78	77	66	1.95	1.40	70	0.014	100	99	24.7	0.00	0.51		96.0	162.9	158.3	66.1	162.1	93	67	67	66		1.001	4.227	406
1612	257.202	259.296		0.16	0.16	1.31	1.07	0.24	78	78	66	1.95	1.40	71	0.013	104	104	24.6	0.08	0.55		95.9	162.7	158.2	66.1	161.9	93	67	67	66		1.001	4.544	436
1613	257.361	259.458		0.16	0.16	1.32	1.06	0.24	78	78	66	1.95	1.40	70	0.015	96	97	24.8	-0.21	0.53		96.1	162.5	157.9	65.5	161.7	92	67	67	66		1.001	4.388	422
1614	257.521	259.619		0.16	0.16	1.32	1.06	0.24	78	78	66	1.94	1.40	70	0.013	103	103	24.8	0.05	0.49		95.9	162.3	157.8	65.5	161.4	92	67	67	66		1.001	4.063	390
1615	257.681	259.779		0.16	0.16	1.32	1.06	0.24	78	78	66	1.95	1.40	74	0.014	100	99	24.6	0.15	0.53		95.8	162.0	157.5	65.4	161.2	114	67	67	66		1.001	4.385	420
1616	257.840	259.940		0.16	0.16	1.32	1.06	0.24	78	78	66	1.96	1.40	76	0.015	96	97	24.6	0.04	0.53		95.9	161.7	157.2	65.0	160.9	139	67	68	66		1.001	4.384	421
1617	258.000	260.103		0.16	0.16	1.32	1.06	0.24	78	78	66	1.94	1.40	77	0.014	100	102	24.6	-0.01	0.55		95.2	161.5	156.9	65.4	160.6	148	67	68	66		1.001	4.548	433
1618	258.160	260.263		0.16	0.16	1.32	1.06	0.24	78	78	66	1.95	1.40	78	0.014	100	100	24.3	0.29	0.53		95.6	161.3	156.7	64.8	160.4	156	68	68	66		1.001	4.384	420
1619	258.319	260.424		0.16	0.16	1.32	1.06	0.24	78	78	66	1.94	1.40	79	0.016	93	94	24.0	0.36	0.53		95.5	161.1	156.6	64.7	160.2	167	68	68	66		1.001	4.383	419
1620	258.480	260.586		0.16	0.16	1.32	1.07	0.24	78	78	66	1.95	1.40	80	0.015	98	98	23.9	0.10	0.55		95.2	161.0	156.5	64.9	160.1	179	68	68	66		1.001	4.548	433
1621	258.640	260.747		0.16	0.16	1.32	1.06	0.24	78	78	66	1.95	1.40	84	0.013	105	105	23.6	0.30	0.55		95.5	160.9	156.4	64.5	160.0	198	68	68	66		1.001	4.556	435
1622	258.799	260.907		0.16	0.16	1.32	1.06	0.24	78	78	66	1.96	1.40	86	0.014	101	100	23.2	0.31	0.51		95.9	161.0	156.5	64.2	160.1	216	68	69	66		1.001	4.231	406
1623	258.959	261.068		0.16	0.16	1.32	1.06	0.24	78	78	66	1.96	1.40	87	0.014	101	101	22.9	0.36	0.56		96.3	161.2	156.8	64.0	160.3	229	69	69	66		1.001	4.648	448
1624	259.118	261.230		0.16	0.16	1.32	1.06	0.24	78	78	66	1.97	1.40	89	0.013	105	106	22.7	0.17	0.53		97.3	161.5	157.0	63.4	160.7	240	69	69	66		1.001	4.412	430
1625	259.277	261.390		0.16	0.16	1.32	1.06	0.24	78	78	66	1.97	1.40	90	0.015	98	97	22.2	0.50	0.47		97.5	162.3	158.0	63.8	161.2	251	69	70	66		1.001	3.943	385
1626	259.436	261.551		0.16	0.16	1.32	1.06	0.24	78	78	66	1.97	1.40	92	0.012	109	110	21.8	0.40	0.49		97.2	163.0	158.7	64.8	161.9	266	69	70	66		1.001	4.042	393
1627	259.595	261.712		0.16	0.16	1.31	1.06	0.24	78	78	67	1.98	1.40	93	0.015	98	98	21.5	0.29	0.50		97.4	163.9	159.5	65.3	162.6	279	70	70	67		1.001	4.200	409
1628	259.754	261.872		0.16	0.16	1.31	1.05	0.24	78	78	66	1.97	1.40	94	0.014	101	101	20.9	0.65	0.47		98.3	164.9	160.6	65.4	163.7	290	70	71	66		1.001	3.899	384
1629	259.913	262.031		0.16	0.16	1.32	1.05	0.24	78	78	66	1.98	1.50	95	0.014	101	101	20.6	0.26	0.45		99.2	166.0	161.6	65.6	164.7	295	70	71	66		1.001	3.737	371
1630	260.073	262.192		0.16	0.16	1.32	1.06	0.24	78	78	67	1.97	1.50	96	0.014	102	102	20.3	0.34	0.47		100.0	167.1	162.6	65.8	165.8	301	70	71	67		1.001	3.903	391
1631	260.232	262.353		0.16	0.16	1.31	1.05	0.24	78	78	67	1.97	1.50	98	0.015	98	99	19.9	0.38	0.45		100.9	168.2	163.7	65.9	166.8	309	71	71	67		1.001	3.741	378
1632	260.391	262.512		0.16	0.16	1.32	1.05	0.24	78	78	66	1.97	1.50	99	0.015	98	98	19.4	0.52	0.45		101.9	169.4	164.7	66.1	168.0	317	71	72	66		1.001	3.737	381
1633	260.550	262.672		0.16	0.16	1.31	1.05	0.24	78	78	67	1.97	1.50	101	0.014	102	102	18.9	0.45	0.47		103.1	170.7	166.0	66.1	169.2	324	71	72	67		1.001	3.898	402
1634	260.709	262.833		0.16	0.16	1.31	1.05	0.24	78	78	67	1.99	1.50	101	0.012	110	111	18.3	0.60	0.47		104.1	172.0	167.2	66.3	170.4	329	71	72	67		1.001	3.904	407
1635	260.867	262.992		0.16	0.16	1.31	1.05	0.24	78	78	66	1.99	1.50	102	0.014	101	101	17.9	0.36	0.45		105.3	173.2	168.4	66.5	171.8	334	72	72	66		1.001	3.740	394
1636	261.026	263.152		0.16	0.16	1.31	1.06	0.24	78	78	66	1.99	1.50	103	0.013	106	106	17.5	0.47	0.43		106.3	174.4	169.6	66.7	173.0	339	72	73	66		1.001	3.580	381
1637	261.185	263.312		0.16	0.16	1.31	1.05	0.24	78	78	67	2.00	1.50	103	0.012	110	110	17.0	0.43	0.49		107.2	175.7	170.7	66.9	174.1	342	72	73	67		1.001	4.065	436
1638	261.343	263.472		0.16	0.16	1.31	1.05	0.24	78	78	66	2.00	1.50	104	0.014	102	102	16.6	0.43	0.49		108.3	176.9	171.9	67.1	175.4	344	72	73	66		1.001	4.061	440
1639	261.503	263.632		0.16	0.16	1.31	1.05	0.24	78	78	66	2.00	1.50	105	0.014	103	102	16.1	0.54	0.47		109.5	178.1	173.1	67.1	176.6	348	72	73	66		1.001	3.902	428
1640	261.661	263.792		0.16	0.16	1.31	1.05	0.24	78	78	67	2.01	1.50	104	0.015	98	99	15.9	0.19	0.49		110.9	179.5	174.4	67.0	177.9	350	73	73	67		1.001	4.059	451
1641	261.820	263.950		0.16	0.16	1.30	1.05	0.24	78	78	67	2.01	1.50	104	0.012	110	109	15.3	0.56	0.45		112.2	180.7	175.6	67.0	179.2	348	73	74	67		1.001	3.751	421
1642	261.977	264.110		0.16	0.16	1.31	1.04	0.24	78	78	67	2.01	1.50	106	0.014	101	102	14.7	0.58	0.45		113.2	181.8	176.7	67.1	180.3	352	73	74	67		1.001	3.756	426
1643	262.136	264.269		0.16	0.16	1.30	1.04	0.24	78	78	67	2.02	1.50	107	0.014	102	102	14.4	0.29	0.47		114.6	183.1	177.9	67.0	181.5	357	73	74	67		1.001	3.899	447
1644	262.294	264.429		0.16	0.16	1.30	1.05	0.24	78	78	67	2.00	1.50	90	0.015	97	97	14.4	0.00	0.37		115.6	184.4	180.0	67.1	182.7	341	73	73	67		1.001	3.093	358
1645	262.453	264.589		0.16	0.16	1.31	1.04	0.24	78	78	67	2.01	1.50	84	0.014	100	100	14.2	0.29	0.39		116.5	185.4	181.1	67.4	183.8	308	72	73	67		1.001	3.254	379
1646	262.611	264.748		0.16	0.16	1.30	1.04	0.24	78	78	67	2.00	1.50	80	0.013	103	103	13.9	0.25	0.43		117.2	186.3	181.9	67.6	184.8	289	72	72	67		1.001	3.571	419
1647	262.771	264.908		0.16	0.16	1.30	1.04	0.24	78	78	67	2.00	1.50	79	0.013	104	104	13.8	0.08	0.41		117.7	186.8	182.5	67.8	185.5	276	72	72	67		1.001	3.416	403
1648	262.929	265.068		0.16	0.16	1.30	1.04	0.24	78	78	67	1.99	1.50	78	0.015	96	96	13.8	0.03	0.39		117.6	187.1	182.7	68.2	185.8	265	72	72	67		1.001	3.255	383
1649	263.088	265.227		0.16	0.16	1.29	1.04	0.24	78	78	67	1.99	1.50	77	0.013	103	103	13.6	0.20	0.41		117.8	187.4	183.1	68.4	186.2	255	72	72	67		1.001	3.417	403
1650	263.246	265.387		0.16	0.16	1.30	1.04	0.24	78	78	67	1.99	1.50	77	0.014	99	100	13.6	-0.03	0.39		117.8	187.7	183.3	68.6	186.4	247	71	72	67		1.001	3.255	384
1651	263.404	265.547		0.16	0.16	1.30	1.04	0.24	78	78	67	2.01	1.50	76	0.012	107	108	13.7	-0.02	0.39		118.1	187.8	183.5	68.5	186.6	240	71	71	67		1.001	3.256	385
1652	263.563	265.706		0.16	0.16	1.30	1.04	0.24	78	78	67	2.00	1.50	75	0.014	100	99	13.5	0.20	0.39		118.3	188.0	183.6	68.5	186.8	233	71	71	67		1.001	3.257	386
1653	263.721	265.866		0.16	0.16	1.30	1.04	0.24	78	78	67	1.99	1.50	75	0.015	96	96	13.5	0.00	0.41		118.3	188.1	183.7	68.6	186.9	228	71	71	67		1.001	3.419	405
1654	263.880	266.026		0.16	0.16	1.30	1.04	0.24	78	78	67	2.01	1.50	75	0.013	103	103	13.6	-0.16	0.41		118.3	188.2	183.8	68.7	186.9	222	71	71	67		1.001	3.420	405
1655	264.039	266.185		0.16	0.16	1.30	1.04	0.24	78	78	67	2.00	1.50	75	0.014	100	99	13.5	0.13	0.41		118.9	188.3	183.9	68.4	187.2	218	71	71	67		1.001	3.418	407
1656	264.198	266.345		0.16	0.16	1.30	1.04	0.24	78	78	67	2.00	1.50	74	0.015	96	96	13.4	0.11	0.41		118.9	188.3	183.9	68.4	187.3	214	70	71	67		1.001	3.416	407
1657	264.356	266.505		0.16	0.16	1.29	1.04	0.24	79	78	67	1.99	1.50	73	0.012	106	107	13.5	-0.17	0.41		118.9	188.4	184.0	68.3	187.2	211	70	70	67		1.001	3.417	407
1658	264.515	266.664		0.16	0.16	1.30	1.04	0.24	78	78	67	2.00	1.50	73	0.014	99	99	13.3	0.24	0.39		118.8	188.4	184.1	68.5	187.3	207	70	70	67		1.001	3.263	388
1659	264.673	266.824		0.16	0.16	1.30	1.04	0.24	78	78	66	1.99	1.50	73	0.014	99	99	13.4	-0.09	0.39		118.7	188.4	184.0	68.7	187.3	203	70	70	66		1.001	3.259	387
1660	264.832	266.985		0.16	0.16	1.30	1.04	0.24	79	78	67	1.99	1.50	72	0.013	103	104	13.5	-0.06	0.39		118.3	188.4	184.0	68.9	187.2	199	70	70	67		1.001	3.254	386
1661	264.990	267.144		0.16	0.16	1.30	1.04	0.24	79	78	67	1.99	1.50	72	0.013	102	102	13.3	0.11	0.39		118.1	188.3	183.9	69.1	187.2	195	70	70	67		1.001	3.254	385
1662	265.149	267.303		0.16	0.16	1.30	1.04	0.24	79	78	67	2.00	1.50	72	0.015	96	95	13.3	0.08	0.43		118.3	188.3	183.9	68.9	187.2	191	70	70	67		1.001	3.577	424
1663	265.309	267.464		0.16	0.16	1.30	1.04	0.24	79	78	67	2.00	1.50	72	0.014	100	100	13.4	-0.12	0.39		118.4	188.4	183.9	68.9	187.3	188	70	70	67		1.001	3.255	386
1664	265.467	267.623		0.16	0.16	1.30	1.04	0.24	79	78	66	2.00	1.50	72	0.014	98	99	13.3	0.12	0.39		118.5	188.3	183.9	68.8	187.3	185	69	69	66		1.001	3.256	386

Elapsed Time	Particulate Sampling Data																	Fuel Weight, lb		Flow, gpm		Temperature Data, oF													
	Gas Meter Cubic Feet (1)	Gas Meter Cubic Feet (2)	Gas Meter Cubic Feet (amb)	Sample Rate, cfm (1)	Sample Rate, cfm (2)	Orifice dH (1)	Orifice dH (2)	Orifice dH (amb)	Meter oF (1)	Meter oF (2)	Meter oF (amb)	Meter Vac. in. Hg. (1)	Meter Vac. in. Hg. (2)	Dilution Tunnel Temp.	Dilution Tunnel dP	Pro. Rate (%) (1)	Pro. Rate (%) (2)	Scale Reading	Weight Change	Load Side Liquid Flow Rate	Boiler Side Liquid Flow Rate (optional)	Thermopile ΔT	Boiler to Heat Exch. Temp.	Heat Exch to Boiler Temp.	Inlet Load Temp.	Outlet Load Temp.	Stack	Filter (1)	Filter (2)	Ambient		Specific Heat of Inlet Water (BTU/lb-°F)	Mass Flow Rate of Inlet Water (lb/min)	Heat Output, Btu
1665	265.626	267.783		0.16	0.16	1.29	1.04	0.24	79	78	67	1.99	1.50	72	0.014	99	99	13.4	-0.12	0.43		118.1	188.2	183.9	69.1	187.2	181	69	70	67		1.001	3.577	423
1666	265.784	267.943		0.16	0.16	1.29	1.04	0.24	79	78	67	1.98	1.50	72	0.012	106	107	13.4	0.01	0.37		117.9	188.1	183.8	69.2	187.0	178	69	69	67		1.001	3.100	366
1667	265.943	268.102		0.16	0.16	1.30	1.04	0.24	79	78	67	1.99	1.50	72	0.014	99	99	13.4	-0.02	0.41		117.6	188.1	183.7	69.4	187.0	175	69	69	67		1.001	3.412	402
1668	266.101	268.262		0.16	0.16	1.30	1.04	0.24	79	78	67	2.00	1.50	72	0.014	98	99	13.3	0.10	0.41		117.6	188.1	183.7	69.5	187.0	172	69	69	67		1.001	3.411	402
1669	266.260	268.423		0.16	0.16	1.31	1.04	0.24	79	78	67	2.00	1.50	72	0.013	103	104	13.3	0.03	0.41		117.5	188.0	183.6	69.3	186.8	169	69	69	67		1.001	3.420	402
1670	266.419	268.582		0.16	0.16	1.30	1.04	0.24	79	79	67	1.99	1.50	72	0.015	96	95	13.4	-0.10	0.39		117.4	187.9	183.5	69.4	186.8	167	69	69	67		1.001	3.257	383
1671	266.578	268.742		0.16	0.16	1.30	1.04	0.24	79	79	67	1.99	1.50	72	0.014	99	99	13.3	0.06	0.38		117.2	187.8	183.4	69.4	186.5	164	69	69	67		1.001	3.188	374
1672	266.737	268.902		0.16	0.16	1.30	1.04	0.24	79	79	67	1.99	1.50	72	0.015	96	96	13.4	-0.09	0.38		117.1	187.7	183.3	69.6	186.7	161	69	69	67		1.001	3.168	371
1673	266.896	269.061		0.16	0.16	1.29	1.04	0.24	79	78	67	2.00	1.50	72	0.013	103	102	13.3	0.07	0.36		116.7	187.8	183.4	69.9	186.6	159	69	69	67		1.001	3.014	352
1674	267.054	269.221		0.16	0.16	1.30	1.05	0.24	79	79	67	2.00	1.50	72	0.014	98	99	13.3	0.01	0.38		116.7	187.5	183.2	69.8	186.5	157	69	69	67		1.001	3.146	368
1675	267.213	269.382		0.16	0.16	1.30	1.04	0.24	79	79	67	2.00	1.50	72	0.014	99	100	13.2	0.08	0.45		116.3	187.3	183.0	69.9	186.2	155	69	69	67		1.001	3.742	436
1676	267.371	269.541		0.16	0.16	1.30	1.04	0.24	79	79	67	1.99	1.50	72	0.013	102	102	13.2	0.03	0.39		116.5	187.3	183.0	69.7	186.1	152	69	69	67		1.001	3.259	380
1677	267.530	269.701		0.16	0.16	1.30	1.04	0.24	79	79	67	1.99	1.50	72	0.013	103	103	13.3	-0.08	0.39		116.2	187.3	182.9	69.9	186.1	150	69	69	67		1.001	3.258	379
1678	267.690	269.862		0.16	0.16	1.35	1.04	0.24	79	79	67	2.03	1.50	72	0.015	96	96	13.5	-0.18	0.41		116.0	187.1	182.8	70.0	186.0	148	69	69	67		1.001	3.415	396
1679	267.852	270.021		0.16	0.16	1.35	1.04	0.24	79	79	67	2.02	1.50	72	0.015	98	95	13.2	0.25	0.39		115.8	187.0	182.6	70.0	185.8	146	69	69	67		1.001	3.255	377
1680	268.013	270.181		0.16	0.16	1.35	1.04	0.24	79	79	67	2.04	1.50	72	0.015	97	96	13.4	-0.18	0.41		115.7	186.9	182.6	70.1	185.7	144	69	69	67		1.001	3.420	396
1681	268.175	270.341		0.16	0.16	1.35	1.04	0.24	79	79	67	2.03	1.50	72	0.014	101	99	13.4	0.01	0.37		115.9	186.8	182.4	69.8	185.6	142	68	69	67		1.001	3.100	360
1682	268.336	270.501		0.16	0.16	1.35	1.04	0.24	79	79	67	2.03	1.50	72	0.015	97	96	13.5	-0.07	0.39		116.0	186.6	182.4	69.5	185.5	140	68	69	67		1.001	3.260	379
1683	268.497	270.660		0.16	0.16	1.35	1.04	0.24	79	79	67	2.04	1.50	72	0.013	104	102	13.4	0.10	0.39		116.1	186.5	182.3	69.4	185.5	139	68	69	67		1.001	3.260	379
1684	268.659	270.821		0.16	0.16	1.35	1.04	0.24	79	79	66	2.04	1.50	72	0.012	109	108	13.3	0.02	0.39		116.1	186.4	182.1	69.2	185.3	137	68	68	66		1.001	3.258	379
1685	268.820	270.980		0.16	0.16	1.35	1.04	0.24	79	79	67	2.04	1.50	72	0.014	100	98	13.1	0.21	0.37		115.9	186.3	182.0	69.3	185.2	136	68	68	67		1.001	3.097	359
1686	268.982	271.140		0.16	0.16	1.34	1.04	0.24	79	79	67	2.06	1.50	79	0.014	102	100	13.4	-0.25	0.41		115.7	186.2	181.9	69.4	185.2	153	69	69	67		1.001	3.417	396
1687	269.143	271.300		0.16	0.16	1.35	1.05	0.24	79	79	67	2.03	1.50	80	0.014	101	100	13.1	0.26	0.43		115.7	186.0	181.8	69.3	185.0	179	68	69	67		1.001	3.576	414
1688	269.305	271.460		0.16	0.16	1.36	1.05	0.24	79	79	67	2.01	1.40	74	0.013	105	103	13.2	-0.02	0.39		115.3	185.8	181.5	69.3	184.7	171	68	69	67		1.001	3.258	376
1689	269.466	271.620		0.16	0.16	1.36	1.05	0.24	79	79	67	2.01	1.40	72	0.012	108	107	13.1	0.01	0.37		115.4	185.9	181.6	69.3	184.7	158	68	69	67		1.001	3.097	358
1690	269.628	271.782		0.16	0.16	1.36	1.05	0.24	79	79	67	2.01	1.40	72	0.014	101	100	13.1	0.06	0.37		115.2	185.7	181.4	69.4	184.6	149	68	69	67		1.001	3.099	358
1691	269.790	271.941		0.16	0.16	1.35	1.05	0.24	79	79	67	2.00	1.40	72	0.012	109	106	13.0	0.01	0.37		114.9	185.6	181.4	69.6	184.5	144	68	68	67		1.001	3.099	356
1692	269.952	272.102		0.16	0.16	1.36	1.05	0.24	79	79	67	2.00	1.40	72	0.014	101	100	13.2	-0.11	0.39		114.7	185.4	181.1	69.5	184.3	140	68	68	67		1.001	3.257	374
1693	270.114	272.263		0.16	0.16	1.36	1.05	0.24	79	79	67	2.01	1.40	71	0.013	105	103	13.0	0.18	0.39		114.9	185.4	181.1	69.5	184.3	137	68	68	67		1.001	3.256	375
1694	270.275	272.423		0.16	0.16	1.35	1.05	0.24	79	79	67	2.00	1.40	72	0.014	100	99	13.1	-0.13	0.39		114.8	185.3	181.0	69.4	184.1	135	68	68	67		1.001	3.259	374
1695	270.437	272.583		0.16	0.16	1.36	1.05	0.24	79	79	67	2.01	1.40	71	0.014	101	99	13.1	0.01	0.35		114.5	185.1	180.9	69.5	184.0	133	68	68	67		1.001	2.937	337
1696	270.599	272.744		0.16	0.16	1.35	1.05	0.24	79	79	67	2.00	1.40	71	0.014	101	100	13.1	-0.01	0.37		114.3	185.0	180.6	69.6	183.9	131	68	68	67		1.001	3.097	355
1697	270.761	272.905		0.16	0.16	1.35	1.04	0.24	79	79	67	2.02	1.40	71	0.015	97	96	13.2	-0.07	0.39		114.5	184.9	180.9	69.3	183.7	129	68	68	67		1.001	3.226	370
1698	270.923	273.065		0.16	0.16	1.36	1.05	0.24	79	79	67	2.02	1.40	72	0.014	101	99	13.1	0.03	0.39		113.9	184.7	180.6	69.7	183.6	127	68	68	67		1.001	3.229	368
1699	271.085	273.225		0.16	0.16	1.36	1.05	0.24	79	79	67	2.00	1.40	71	0.014	101	99	13.3	-0.10	0.39		113.8	184.6	180.3	69.7	183.5	125	68	68	67		1.001	3.255	371
1700	271.247	273.386		0.16	0.16	1.35	1.05	0.24	79	79	67	2.02	1.40	72	0.013	105	103	13.2	0.05	0.40		113.6	184.5	180.3	69.7	183.3	125	68	68	67		1.001	3.302	376
1701	271.409	273.546		0.16	0.16	1.35	1.05	0.24	79	79	67	2.02	1.40	72	0.014	101	99	13.1	0.05	0.39		113.4	184.5	180.3	69.9	183.2	123	68	68	67		1.001	3.256	370
1702	271.570	273.707		0.16	0.16	1.35	1.05	0.24	79	79	67	2.01	1.40	71	0.015	97	96	13.3	-0.10	0.37		113.0	184.2	180.1	70.1	183.1	122	68	68	67		1.001	3.100	351
1703	271.732	273.868		0.16	0.16	1.36	1.05	0.24	79	79	67	2.00	1.40	71	0.013	105	103	13.1	0.18	0.43		112.8	184.1	179.9	70.1	182.9	121	68	68	67		1.001	3.576	404
1704	271.894	274.028		0.16	0.16	1.35	1.05	0.24	79	79	67	2.00	1.40	71	0.012	109	107	13.0	0.03	0.33		113.2	183.9	179.8	69.8	182.9	120	68	68	67		1.001	2.779	315
1705	272.056	274.188		0.16	0.16	1.35	1.05	0.24	79	79	67	2.00	1.40	71	0.016	94	93	13.0	0.00	0.45		112.8	183.8	179.6	69.9	182.6	118	68	68	67		1.001	3.738	422
1706	272.218	274.350		0.16	0.16	1.35	1.05	0.24	79	79	67	2.01	1.40	71	0.012	109	108	13.1	-0.07	0.39		112.7	183.6	179.5	69.8	182.6	117	68	68	67		1.001	3.258	368
1707	272.380	274.510		0.16	0.16	1.35	1.05	0.24	79	79	67	2.01	1.40	71	0.014	101	99	13.2	-0.05	0.39		112.8	183.4	179.3	69.6	182.4	116	68	68	67		1.001	3.259	368
1708	272.542	274.670		0.16	0.16	1.36	1.05	0.24	79	79	67	2.00	1.40	71	0.014	101	99	13.1	0.03	0.37		112.7	183.3	179.2	69.7	182.4	116	68	68	67		1.001	3.098	350
1709	272.704	274.831		0.16	0.16	1.36	1.05	0.24	79	79	67	2.01	1.40	71	0.015	97	96	13.1	-0.02	0.41		112.5	183.2	179.1	69.6	182.1	115	68	68	67		1.001	3.419	385
1710	272.866	274.992		0.16	0.16	1.35	1.05	0.24	79	79	67	2.02	1.40	71	0.014	101	100	13.1	0.05	0.37		112.6	183.1	178.9	69.5	182.1	114	68	68	67		1.001	3.099	349
1711	273.028	275.152		0.16	0.16	1.35	1.05	0.24	79	79	67	2.00	1.40	72	0.014	101	99	13.1	0.00	0.41		112.2	182.9	178.8	69.6	181.8	113	68	68	67		1.001	3.418	384
1712	273.189	275.312		0.16	0.16	1.35	1.05	0.24	79	79	67	2.00	1.40	71	0.013	104	103	13.2	-0.11	0.41		112.1	182.8	178.7	69.6	181.7	113	68	68	67		1.001	3.420	384
1713	273.351	275.474		0.16	0.16	1.35	1.05	0.24	79	79	67	2.00	1.40	71	0.014	101	100	13.2	0.04	0.39		112.0	182.7	178.6	69.6	181.6	112	68	68	67		1.001	3.256	365
1714	273.513	275.633		0.16	0.16	1.35	1.05	0.24	79	79	67	2.01	1.40	71	0.014	101	98	13.1	0.01	0.43		111.8	182.4	178.4	69.5	181.4	111	68	68	67		1.001	3.582	401
1715	273.675	275.794		0.16	0.16	1.35	1.05	0.24	79	79	67	2.01	1.40	71	0.015	97	96	13.1	0.02	0.41		111.8	182.3	178.2	69.5	181.3	110	68	68	67		1.001	3.420	383
1716	273.837	275.955		0.16	0.16	1.35	1.05	0.24	79	79	67	2.01	1.40	71	0.015	97	96	13.1	0.00	0.39		111.7	182.1	178.1	69.6	181.2	109	68	68	67		1.001	3.260	364
1717	273.999	276.116		0.16	0.16	1.35	1.04	0.24	79	79	67	2.01	1.40	72	0.012	109	108	13.1	0.02	0.41		111.4	182.0	177.9	69.6	181.0	108	68	68	67		1.001	3.416	381
1718	274.161	276.275		0.16	0.16	1.34	1.05	0.24	79	79	67	2.01	1.50	79	0.013	105	103	13.1	0.03	0.37		111.0	181.8	177.8	69.7	180.7	142	68	69	67		1.001	3.096	344
1719	274.322	276.436		0.16	0.16	1.35	1.05	0.24	79	79	67	2.02	1.40	75	0.014	101	100	13.1	0.01	0.39		111.1	181.5	177.5	69.4	180.5	163	68	68	67		1.001	3.257	362
1720	274.484	276.597		0.16	0.16	1.35	1.05	0.24	79	79	67	2.02	1.40	72	0.016	94	93	13.1	-0.06	0.37		111.2	181.4	177.4	69.2	180.5	143	68	68	67		1.001	3.093	344
1721	274.646	276.757		0.16	0.16	1.35	1.05	0.24	79	79	67	2.01	1.40	72	0.014	101	99	13.0	0.13	0.43		111.1	181.3	177.2	69.2	180.4	132	68	68	67		1.001	3.574	398
1722	274.808	276.917		0.16	0.16	1.35	1.05	0.24	79	79	67	2.00	1.40	71	0.014	101	99	13.1	-0.05	0.41		111.2	181.1	177.1	69.1	180.2	125	68	68	67		1.001	3.416	380
1723	274.970	277.079		0.16	0.16	1.35	1.05	0.24	79	79	67	2.00	1.40	71	0.015	97	97	13.2	-0.11	0.37		111.3	181.0	177.0	68.8	180.1	121	68	68	67		1.001	3.096	345
1724	275.132	277.239		0.16	0.16	1.35	1.05	0.24	79	79	67	2.00	1.40	71	0.013	105	103	13.1	0.03	0.37		111.0	180.8	176.8	68.8	179.7	118	68	68	67		1.001	3.096	344
1725	275.293	277.399		0.16	0.16	1.35	1.05	0.24	79	79	67	2.01	1.40	71	0.013	104	103	13.0	0.16	0.41		111.1	180.7	176.7	68.7	179.8	116	68	68	67		1.001	3.420	380
1726	275.455	277.561		0.16	0.16	1.35	1.05	0.24	79	79	67	2.00	1.40	71	0.015	97	97	13.1	-0.09	0.38		111.0	180.5	176.5	68.8	179.7	114	68	68	67		1.001	3.155	351

Elapsed Time	Particulate Sampling Data																	Fuel Weight, lb		Flow, gpm		Temperature Data, oF													
	Gas Meter Cubic Feet (1)	Gas Meter Cubic Feet (2)	Gas Meter Cubic Feet (amb)	Sample Rate, cfm (1)	Sample Rate, cfm (2)	Orifice dH (1)	Orifice dH (2)	Orifice dH (amb)	Meter oF (1)	Meter oF (2)	Meter oF (amb)	Meter Vac. in. Hg. (1)	Meter Vac. in. Hg. (2)	Dilution Tunnel Temp.	Dilution Tunnel dP	Pro. Rate (%) (1)	Pro. Rate (%) (2)	Scale Reading	Weight Change	Load Side Liquid Flow Rate	Boiler Side Liquid Flow Rate (optional)	Thermopile ΔT	Boiler to Heat Exch. Temp.	Heat Exch to Boiler Temp.	Inlet Load Temp.	Outlet Load Temp.	Stack	Filter (1)	Filter (2)	Ambient		Specific Heat of Inlet Water (BTU/lb-°F)	Mass Flow Rate of Inlet Water (lb/min)	Heat Output, Btu
1727	275.617	277.721		0.16	0.16	1.35	1.05	0.24	79	79	67	2.00	1.40	71	0.014	101	99	13.1	0.01	0.41		110.6	180.4	176.3	68.7	179.4	113	68	68	67		1.001	3.371	373
1728	275.779	277.881		0.16	0.16	1.35	1.05	0.24	79	79	67	2.02	1.40	71	0.013	105	103	13.0	0.09	0.39		110.5	180.3	176.2	68.7	179.2	111	68	68	67		1.001	3.258	361
1729	275.941	278.042		0.16	0.16	1.34	1.05	0.24	79	79	67	2.01	1.40	71	0.013	105	103	13.1	-0.09	0.41		110.2	180.1	176.1	68.9	179.2	110	68	68	67		1.001	3.401	375
1730	276.103	278.203		0.16	0.16	1.35	1.05	0.24	79	79	67	2.02	1.40	72	0.014	101	100	13.2	-0.13	0.37		109.9	179.9	175.9	69.0	178.9	109	68	68	67		1.001	3.098	341
1731	276.265	278.363		0.16	0.16	1.34	1.05	0.24	79	79	67	2.00	1.40	71	0.012	109	107	13.0	0.21	0.39		110.0	179.8	175.8	68.8	178.8	109	68	68	67		1.001	3.256	359
1732	276.427	278.523		0.16	0.16	1.34	1.05	0.24	79	79	67	2.02	1.40	71	0.014	101	99	13.0	-0.05	0.41		109.9	179.6	175.6	68.7	178.6	108	68	68	67		1.001	3.420	376
1733	276.589	278.684		0.16	0.16	1.34	1.05	0.24	79	79	67	2.00	1.40	71	0.012	109	108	13.1	-0.06	0.43		109.9	179.5	175.5	68.6	178.5	107	68	68	67		1.001	3.560	394
1734	276.751	278.845		0.16	0.16	1.34	1.05	0.24	79	79	67	2.02	1.40	72	0.014	101	100	13.1	0.03	0.37		110.0	179.3	175.3	68.4	178.4	106	68	68	67		1.001	3.098	341
1735	276.913	279.005		0.16	0.16	1.35	1.05	0.24	79	79	67	2.00	1.40	72	0.014	101	99	13.0	0.08	0.35		109.8	179.1	175.1	68.5	178.3	105	68	68	67		1.001	2.937	323
1736	277.075	279.166		0.16	0.16	1.35	1.05	0.24	79	79	67	2.00	1.40	71	0.015	97	96	13.2	-0.20	0.41		109.5	178.9	175.0	68.6	178.1	104	68	68	67		1.001	3.418	375
1737	277.237	279.327		0.16	0.16	1.34	1.05	0.24	79	79	67	2.01	1.40	72	0.012	109	108	13.0	0.16	0.41		108.9	178.8	174.8	68.9	177.8	104	68	68	67		1.001	3.414	372
1738	277.399	279.487		0.16	0.16	1.34	1.05	0.24	79	79	67	2.01	1.40	71	0.014	101	99	13.0	0.02	0.39		109.1	178.6	174.6	68.7	177.8	103	68	68	67		1.001	3.257	356
1739	277.560	279.649		0.16	0.16	1.35	1.05	0.24	79	79	67	2.00	1.40	71	0.013	104	104	13.0	-0.01	0.39		108.6	178.4	174.5	68.9	177.6	103	68	68	67		1.001	3.257	354
1740	277.722	279.809		0.16	0.16	1.35	1.05	0.24	79	79	67	2.02	1.40	72	0.014	101	99	13.0	0.02	0.39		108.6	178.3	174.3	68.7	177.3	102	68	68	67		1.001	3.259	354
1741	277.884	279.969		0.16	0.16	1.35	1.05	0.24	79	79	67	2.00	1.40	71	0.013	105	103	13.0	-0.03	0.37		108.6	178.1	174.1	68.5	177.2	101	68	68	67		1.001	3.096	337
1742	278.046	280.130		0.16	0.16	1.34	1.05	0.24	79	79	67	2.00	1.40	71	0.013	105	103	13.1	-0.02	0.37		108.5	177.9	174.0	68.5	177.0	100	68	68	67		1.001	3.096	336
1743	278.208	280.291		0.16	0.16	1.35	1.05	0.24	79	79	67	2.00	1.40	71	0.013	105	103	13.0	0.01	0.43		108.2	177.7	173.8	68.6	176.9	100	68	68	67		1.001	3.579	388
1744	278.370	280.451		0.16	0.16	1.35	1.05	0.24	79	79	67	2.00	1.40	71	0.016	94	93	13.0	0.03	0.37		108.0	177.6	173.7	68.7	176.6	100	68	68	67		1.001	3.097	335
1745	278.532	280.612		0.16	0.16	1.35	1.05	0.24	79	79	67	2.01	1.40	71	0.013	105	103	13.0	0.03	0.39		108.0	177.5	173.5	68.5	176.5	99	68	68	67		1.001	3.255	352
1746	278.694	280.773		0.16	0.16	1.35	1.05	0.24	79	79	67	2.01	1.40	71	0.013	105	103	13.1	-0.12	0.41		108.0	177.3	173.3	68.4	176.4	99	68	68	67		1.001	3.420	370
1747	278.856	280.933		0.16	0.16	1.35	1.05	0.24	79	79	67	2.01	1.40	71	0.013	105	103	13.1	0.02	0.39		107.8	177.1	173.2	68.4	176.1	98	68	68	67		1.001	3.260	352
1748	279.018	281.093		0.16	0.16	1.35	1.05	0.24	79	79	67	2.00	1.40	71	0.012	109	107	13.0	0.05	0.43		107.6	177.0	173.1	68.4	176.0	98	68	68	67		1.001	3.581	386
1749	279.180	281.255		0.16	0.16	1.35	1.05	0.24	79	79	67	2.02	1.40	74	0.013	105	104	12.9	0.10	0.39		107.7	176.8	172.9	68.1	175.8	99	68	68	67		1.001	3.236	349
1750	279.342	281.414		0.16	0.16	1.35	1.04	0.24	79	79	67	2.02	1.40	76	0.015	98	95	13.1	-0.13	0.41		107.4	176.6	172.6	68.3	175.8	140	68	68	67		1.001	3.404	366
1751	279.504	281.575		0.16	0.16	1.35	1.05	0.24	79	79	67	2.00	1.40	72	0.013	105	103	13.2	-0.12	0.40		107.1	176.4	172.6	68.3	175.5	137	68	68	67		1.001	3.288	353
1752	279.666	281.736		0.16	0.16	1.35	1.05	0.24	79	79	67	2.00	1.40	72	0.014	101	100	13.1	0.11	0.41		107.1	176.3	172.4	68.2	175.3	124	68	68	67		1.001	3.417	366
1753	279.827	281.897		0.16	0.16	1.35	1.05	0.24	79	79	67	2.00	1.40	72	0.015	97	96	13.0	0.10	0.37		107.0	176.1	172.2	68.2	175.2	116	68	68	67		1.001	3.106	333
1754	279.989	282.057		0.16	0.16	1.36	1.05	0.24	79	79	67	2.00	1.40	72	0.014	101	99	13.1	-0.15	0.39		106.8	176.0	172.1	68.2	175.0	111	68	68	67		1.001	3.242	347
1755	280.151	282.217		0.16	0.16	1.35	1.05	0.24	79	79	67	2.00	1.40	71	0.015	97	96	13.0	0.15	0.33		106.9	175.8	171.9	68.0	175.0	108	68	68	67		1.001	2.785	298
1756	280.313	282.378		0.16	0.16	1.35	1.05	0.24	79	79	67	2.01	1.40	71	0.011	114	112	13.1	-0.15	0.41		106.6	175.6	171.7	68.1	174.7	106	68	68	67		1.001	3.411	364
1757	280.474	282.539		0.16	0.16	1.35	1.05	0.24	79	79	67	2.01	1.40	71	0.013	104	103	13.0	0.15	0.40		106.5	175.4	171.5	67.9	174.4	104	68	68	67		1.001	3.343	356
1758	280.636	282.699		0.16	0.16	1.35	1.05	0.24	79	79	67	2.00	1.40	71	0.015	97	96	13.0	-0.04	0.39		106.3	175.2	171.4	68.0	174.4	103	68	68	67		1.001	3.259	347
1759	280.798	282.861		0.16	0.16	1.36	1.05	0.24	79	79	67	2.02	1.40	72	0.013	105	104	13.1	-0.08	0.41		106.0	175.1	171.3	68.2	174.2	102	68	68	67		1.001	3.408	362
1760	280.960	283.020		0.16	0.16	1.35	1.05	0.24	79	79	67	2.02	1.40	73	0.014	101	98	13.1	0.02	0.39		105.7	174.9	171.0	68.3	173.9	101	68	68	67		1.001	3.258	345
1761	281.122	283.181		0.16	0.16	1.35	1.05	0.24	79	79	67	2.00	1.40	72	0.013	105	103	13.1	0.00	0.41		105.5	174.7	170.9	68.3	173.7	100	68	68	67		1.001	3.419	361
1762	281.283	283.342		0.16	0.16	1.36	1.05	0.24	79	79	67	2.00	1.40	71	0.015	97	96	13.0	0.08	0.37		105.3	174.5	170.6	68.3	173.5	100	68	68	67		1.001	3.095	326
1763	281.445	283.503		0.16	0.16	1.36	1.04	0.24	79	79	67	2.01	1.40	71	0.012	109	108	13.0	-0.06	0.41		105.3	174.3	170.5	68.2	173.5	99	68	68	67		1.001	3.416	360
1764	281.607	283.663		0.16	0.16	1.35	1.05	0.24	79	79	67	2.01	1.40	70	0.014	101	99	13.0	0.05	0.41		105.2	174.2	170.3	68.1	173.3	98	68	68	67		1.001	3.416	360
1765	281.769	283.824		0.16	0.16	1.36	1.05	0.24	79	79	67	2.01	1.40	70	0.013	105	103	13.1	-0.07	0.39		105.1	174.1	170.3	68.0	173.1	98	68	68	67		1.001	3.258	343
1766	281.931	283.985		0.16	0.16	1.35	1.05	0.24	79	79	67	2.01	1.40	70	0.015	97	96	13.0	0.08	0.35		105.1	174.0	170.1	68.0	173.1	97	68	68	67		1.001	2.935	309
1767	282.093	284.145		0.16	0.16	1.36	1.05	0.24	79	79	66	2.00	1.40	70	0.014	101	99	12.9	0.06	0.37		104.9	173.7	169.9	67.9	172.8	96	68	68	66		1.001	3.098	325
1768	282.255	284.305		0.16	0.16	1.35	1.05	0.24	79	79	67	2.00	1.40	69	0.014	101	99	13.1	-0.18	0.37		105.0	173.5	169.8	67.6	172.6	96	68	68	67		1.001	3.103	326
1769	282.417	284.467		0.16	0.16	1.36	1.05	0.24	79	79	66	2.01	1.40	69	0.013	104	104	13.1	0.00	0.39		105.1	173.3	169.5	67.4	172.5	96	68	68	66		1.001	3.256	343
1770	282.579	284.627		0.16	0.16	1.35	1.05	0.24	79	79	66	2.01	1.40	69	0.012	109	107	12.9	0.19	0.41		105.0	173.1	169.3	67.2	172.2	95	68	68	66		1.001	3.421	359
1771	282.741	284.788		0.16	0.16	1.35	1.05	0.24	79	79	66	2.00	1.40	69	0.013	104	103	13.1	-0.20	0.39		105.2	173.0	169.2	67.0	172.2	95	67	68	66		1.001	3.265	344
1772	282.903	284.949		0.16	0.16	1.36	1.05	0.24	79	79	66	2.00	1.40	69	0.014	101	99	13.0	0.09	0.41		104.9	172.8	169.0	67.0	171.9	95	67	68	66		1.001	3.424	359
1773	283.065	285.110		0.16	0.16	1.36	1.05	0.24	79	79	66	2.00	1.40	69	0.013	104	103	13.0	0.06	0.37		104.7	172.6	168.8	66.9	171.6	95	67	67	66		1.001	3.098	325
1774	283.227	285.270		0.16	0.16	1.35	1.05	0.24	79	79	66	2.01	1.40	68	0.015	97	95	13.0	-0.05	0.43		104.8	172.5	168.7	66.7	171.5	94	67	67	66		1.001	3.560	376
1775	283.389	285.431		0.16	0.16	1.36	1.06	0.24	79	79	66	2.01	1.40	68	0.014	101	99	13.0	0.03	0.41		104.7	172.4	168.5	66.7	171.3	93	67	67	66		1.001	3.420	358
1776	283.551	285.593		0.16	0.16	1.36	1.05	0.24	79	79	65	2.01	1.40	68	0.013	104	104	13.0	0.02	0.37		104.7	172.2	168.4	66.7	171.4	93	67	67	65		1.001	3.100	325
1777	283.713	285.753		0.16	0.16	1.36	1.05	0.24	79	79	65	2.00	1.40	68	0.016	94	92	13.0	-0.02	0.41		104.6	172.0	168.2	66.5	171.1	92	67	67	65		1.001	3.419	358
1778	283.875	285.914		0.16	0.16	1.35	1.05	0.24	79	79	65	2.01	1.40	68	0.014	101	99	13.0	0.02	0.39		104.6	171.8	168.0	66.4	170.9	92	67	67	65		1.001	3.256	341
1779	284.037	286.075		0.16	0.16	1.35	1.05	0.24	79	79	65	2.01	1.40	68	0.014	101	99	13.1	-0.09	0.41		104.5	171.6	167.8	66.2	170.7	91	67	67	65		1.001	3.384	354
1780	284.199	286.236		0.16	0.16	1.35	1.05	0.24	79	79	65	2.01	1.40	67	0.013	104	103	13.0	0.08	0.36		104.5	171.4	167.6	66.0	170.5	91	66	67	65		1.001	2.990	313
1781	284.361	286.396		0.16	0.16	1.35	1.05	0.24	79	79	65	2.00	1.40	71	0.012	109	107	13.1	-0.12	0.42		104.5	171.3	167.5	65.9	170.4	117	66	67	65		1.001	3.498	366
1782	284.523	286.557		0.16	0.16	1.35	1.06	0.24	79	79	64	2.00	1.40	70	0.016	94	93	12.9	0.19	0.39		104.4	171.1	167.3	65.8	170.2	141	66	67	64		1.001	3.258	341
1783	284.685	286.719		0.16	0.16	1.35	1.05	0.24	79	78	65	2.01	1.40	68	0.013	104	104	12.9	0.03	0.41		104.5	171.0	167.2	65.6	170.0	124	66	67	65		1.001	3.381	354
1784	284.847	286.880		0.16	0.16	1.35	1.06	0.24	79	78	64	2.00	1.40	67	0.014	100	99	13.0	-0.08	0.40		104.4	170.8	167.0	65.3	169.7	114	66	66	64		1.001	3.303	345
1785	285.009	287.041		0.16	0.16	1.35	1.06	0.24	79	78	64	2.01	1.40	67	0.014	100	99	12.9	0.02	0.39		104.3	170.5	166.7	65.3	169.6	108	66	66	64		1.001	3.261	341
1786	285.171	287.202		0.16	0.16	1.35	1.06	0.24	79	78	64	2.01	1.40	67	0.013	104	103	12.9	0.03	0.41		104.3	170.3	166.5	65.2	169.5	104	66	66	64		1.001	3.423	357
1787	285.334	287.363		0.16	0.16	1.36	1.05	0.24	79	78	64	2.00	1.40	67	0.014	101	99	13.0	-0.11	0.43		104.0	170.2	166.4	65.2	169.2	102	66	66	64		1.001	3.576	372
1788	285.496	287.523		0.16	0.16	1.36	1.06	0.24	79	78	64	2.00	1.40	67	0.015	97	95	13.0	0.04	0.43		104.0	170.0	166.3	65.1	169.1	100	66	66	64		1.001	3.583	373

Elapsed Time	Particulate Sampling Data																	Fuel Weight, lb		Flow, gpm		Temperature Data, oF													
	Gas Meter Cubic Feet (1)	Gas Meter Cubic Feet (2)	Gas Meter Cubic Feet (amb)	Sample Rate, cfm (1)	Sample Rate, cfm (2)	Orifice dH (1)	Orifice dH (2)	Orifice dH (amb)	Meter oF (1)	Meter oF (2)	Meter oF (amb)	Meter Vac. in. Hg. (1)	Meter Vac. in. Hg. (2)	Dilution Tunnel Temp.	Dilution Tunnel dP	Pro. Rate (%) (1)	Pro. Rate (%) (2)	Scale Reading	Weight Change	Load Side Liquid Flow Rate	Boiler Side Liquid Flow Rate (optional)	Thermopile ΔT	Boiler to Heat Exch. Temp.	Heat Exch to Boiler Temp.	Inlet Load Temp.	Outlet Load Temp.	Stack	Filter (1)	Filter (2)	Ambient		Specific Heat of Inlet Water (BTU/lb-°F)	Mass Flow Rate of Inlet Water (lb/min)	Heat Output, Btu
1789	285.658	287.685		0.16	0.16	1.35	1.06	0.24	79	78	64	2.01	1.40	67	0.013	104	104	13.0	0.02	0.43		104.0	169.8	166.1	65.0	169.0	99	66	66	64		1.001	3.564	373
1790	285.820	287.846		0.16	0.16	1.35	1.06	0.24	79	78	64	2.02	1.40	67	0.015	97	96	12.9	0.02	0.43		103.8	169.6	165.8	64.9	168.6	97	66	66	64		1.001	3.563	372
1791	285.982	288.007		0.16	0.16	1.35	1.06	0.24	79	78	64	2.01	1.40	66	0.012	108	107	12.9	-0.02	0.41		103.7	169.5	165.7	64.9	168.6	96	65	66	64		1.001	3.424	356
1792	286.144	288.168		0.16	0.16	1.35	1.06	0.24	79	78	64	2.00	1.40	66	0.013	104	103	13.2	-0.25	0.43		103.7	169.3	165.5	64.7	168.4	95	65	66	64		1.001	3.586	372
1793	286.307	288.329		0.16	0.16	1.35	1.06	0.24	79	78	64	2.01	1.40	66	0.013	105	103	13.0	0.24	0.37		103.6	169.2	165.4	64.6	168.2	95	65	66	64		1.001	3.104	322
1794	286.469	288.490		0.16	0.16	1.35	1.05	0.24	78	78	64	2.00	1.40	66	0.015	97	96	12.9	0.05	0.33		103.6	169.0	165.2	64.4	168.0	94	65	65	64		1.001	2.783	289
1795	286.631	288.651		0.16	0.16	1.35	1.06	0.24	78	78	64	2.01	1.40	66	0.012	109	107	12.9	0.00	0.43		103.5	168.8	165.1	64.4	167.9	94	65	65	64		1.001	3.564	371
1796	286.792	288.812		0.16	0.16	1.35	1.06	0.24	78	78	63	1.99	1.40	66	0.013	104	103	13.0	-0.13	0.41		103.2	168.6	164.9	64.5	167.7	93	65	65	63		1.001	3.425	354
1797	286.955	288.973		0.16	0.16	1.35	1.06	0.24	78	78	64	2.00	1.40	66	0.013	105	103	13.1	-0.05	0.39		103.0	168.4	164.6	64.5	167.5	93	65	65	64		1.001	3.264	337
1798	287.117	289.134		0.16	0.16	1.36	1.06	0.24	78	78	63	2.01	1.40	66	0.015	97	96	12.9	0.16	0.37		102.8	168.2	164.5	64.6	167.4	92	65	65	63		1.001	3.106	320
1799	287.279	289.295		0.16	0.16	1.36	1.06	0.24	78	77	63	1.99	1.40	66	0.015	97	96	13.0	-0.09	0.41		102.5	168.1	164.3	64.6	167.1	91	65	65	63		1.001	3.425	351
1800	287.441	289.457		0.16	0.16	1.36	1.06	0.24	78	77	63	2.00	1.40	66	0.013	104	104	13.0	0.04	0.39		102.5	167.9	164.2	64.5	167.0	91	65	65	63		1.001	3.267	335
1801	287.603	289.618		0.16	0.16	1.36	1.06	0.24	78	77	63	2.00	1.40	66	0.014	101	99	12.9	0.06	0.39		102.3	167.7	164.0	64.5	166.8	90	65	65	63		1.001	3.266	334
1802	287.765	289.779		0.16	0.16	1.36	1.06	0.24	78	77	63	1.99	1.40	66	0.014	101	99	13.1	-0.14	0.37		102.0	167.6	163.9	64.6	166.6	90	65	65	63		1.001	3.108	317
1803	287.927	289.940		0.16	0.16	1.35	1.06	0.24	78	77	63	2.01	1.40	66	0.013	104	103	13.0	0.07	0.39		101.8	167.4	163.7	64.6	166.4	90	64	65	63		1.001	3.272	334
1804	288.089	290.102		0.16	0.16	1.36	1.06	0.24	78	77	63	1.99	1.40	66	0.012	109	108	13.1	-0.10	0.39		101.7	167.2	163.5	64.5	166.2	89	64	65	63		1.001	3.265	332
1805	288.251	290.262		0.16	0.16	1.36	1.06	0.24	78	77	63	2.01	1.40	66	0.014	101	99	13.1	-0.02	0.33		101.7	167.0	163.4	64.4	166.1	89	64	65	63		1.001	2.784	283
1806	288.413	290.423		0.16	0.16	1.35	1.06	0.24	78	77	63	2.00	1.40	66	0.014	101	99	13.0	0.13	0.35		101.5	166.8	163.2	64.5	166.0	89	64	65	63		1.001	2.956	300
1807	288.575	290.585		0.16	0.16	1.36	1.06	0.24	78	77	63	2.00	1.40	65	0.012	109	108	13.0	-0.02	0.39		101.2	166.6	163.0	64.6	165.8	88	64	65	63		1.001	3.263	331
1808	288.737	290.746		0.16	0.16	1.36	1.06	0.24	78	77	63	1.99	1.40	65	0.013	104	103	12.9	0.06	0.40		101.0	166.4	162.8	64.5	165.4	88	64	64	63		1.001	3.315	335
1809	288.899	290.907		0.16	0.16	1.37	1.06	0.24	78	77	63	2.01	1.40	65	0.014	100	99	13.0	-0.10	0.41		101.0	166.2	162.6	64.3	165.4	87	64	64	63		1.001	3.426	347
1810	289.061	291.068		0.16	0.16	1.36	1.06	0.24	78	77	63	2.00	1.40	65	0.013	104	103	13.0	-0.01	0.41		100.8	166.1	162.4	64.4	165.1	87	64	64	63		1.001	3.413	344
1811	289.223	291.230		0.16	0.16	1.36	1.06	0.24	78	77	63	1.99	1.40	66	0.012	109	108	13.0	0.01	0.43		100.9	165.9	162.2	64.2	165.1	87	64	64	63		1.001	3.563	362
1812	289.385	291.391		0.16	0.16	1.36	1.06	0.24	78	77	63	2.01	1.40	67	0.014	101	100	13.0	0.00	0.37		100.4	165.7	162.1	64.4	164.8	86	64	64	63		1.001	3.108	313
1813	289.547	291.551		0.16	0.16	1.36	1.06	0.24	78	77	63	1.99	1.40	69	0.015	97	96	13.0	0.07	0.41		100.5	165.5	161.9	64.2	164.7	125	64	64	63		1.001	3.429	345
1814	289.709	291.713		0.16	0.16	1.36	1.06	0.24	78	77	63	2.01	1.40	66	0.013	104	104	13.1	-0.13	0.39		100.5	165.4	161.8	64.0	164.5	128	64	64	63		1.001	3.269	329
1815	289.871	291.874		0.16	0.16	1.36	1.06	0.24	77	77	63	2.01	1.40	65	0.014	101	99	13.1	-0.01	0.39		100.3	165.3	161.6	64.0	164.3	113	64	64	63		1.001	3.269	328
1816	290.033	292.035		0.16	0.16	1.36	1.06	0.24	77	77	63	2.00	1.40	65	0.015	97	96	13.1	-0.04	0.37		100.3	165.0	161.4	64.0	164.2	105	64	64	63		1.001	3.109	312
1817	290.195	292.196		0.16	0.16	1.36	1.06	0.24	77	76	63	2.01	1.40	65	0.014	101	100	13.1	0.07	0.37		100.2	164.9	161.3	63.9	164.1	101	64	64	63		1.001	3.109	312
1818	290.357	292.358		0.16	0.16	1.36	1.06	0.24	77	76	62	1.99	1.40	65	0.014	101	100	13.0	0.01	0.45		99.9	164.7	161.1	64.0	163.9	98	64	64	62		1.001	3.751	375
1819	290.519	292.519		0.16	0.16	1.36	1.06	0.24	77	76	62	2.01	1.40	65	0.013	104	103	13.1	-0.02	0.41		99.8	164.5	160.9	63.8	163.6	96	64	64	62		1.001	3.429	342
1820	290.681	292.680		0.16	0.16	1.36	1.06	0.24	77	76	62	1.99	1.40	65	0.014	101	100	13.2	-0.11	0.43		99.7	164.4	160.8	63.8	163.6	95	64	64	62		1.001	3.594	359
1821	290.843	292.841		0.16	0.16	1.36	1.06	0.24	77	76	62	2.01	1.40	65	0.011	114	112	13.1	0.08	0.35		99.6	164.2	160.6	63.7	163.3	94	64	64	62		1.001	2.951	294
1822	291.005	293.004		0.16	0.16	1.36	1.06	0.24	77	76	62	1.99	1.40	65	0.014	101	101	13.2	-0.08	0.39		99.5	164.0	160.4	63.7	163.2	93	64	64	62		1.001	3.268	326
1823	291.167	293.164		0.16	0.16	1.36	1.06	0.24	77	76	62	2.00	1.40	65	0.014	101	99	13.1	0.08	0.39		99.2	163.8	160.2	63.7	162.9	92	63	64	62		1.001	3.269	325
1824	291.329	293.325		0.16	0.16	1.36	1.07	0.24	77	76	62	2.00	1.40	65	0.011	114	112	13.0	0.05	0.37		98.8	163.6	160.0	63.8	162.6	91	63	64	62		1.001	3.108	307
1825	291.490	293.487		0.16	0.16	1.36	1.06	0.24	77	76	62	2.00	1.40	65	0.014	100	100	13.1	-0.05	0.39		98.9	163.5	159.9	63.6	162.5	90	63	64	62		1.001	3.271	324
1826	291.652	293.649		0.16	0.16	1.36	1.06	0.24	77	76	62	1.99	1.40	65	0.014	101	100	13.0	0.08	0.39		98.9	163.3	159.7	63.6	162.4	90	63	64	62		1.001	3.268	324
1827	291.814	293.810		0.16	0.16	1.36	1.06	0.24	77	76	62	2.00	1.40	65	0.013	104	103	13.0	-0.04	0.35		98.8	163.2	159.6	63.4	162.2	89	63	63	62		1.001	2.948	292
1828	291.976	293.971		0.16	0.16	1.36	1.06	0.24	77	76	62	1.99	1.40	65	0.011	114	112	13.1	-0.03	0.39		98.7	163.0	159.5	63.5	162.1	89	63	64	62		1.001	3.270	323
1829	292.138	294.133		0.16	0.16	1.35	1.06	0.24	77	76	62	2.01	1.40	65	0.013	104	104	13.1	-0.02	0.35		98.4	162.8	159.3	63.5	162.0	89	63	63	62		1.001	2.954	291
1830	292.300	294.294		0.16	0.16	1.36	1.06	0.24	77	76	62	1.99	1.40	65	0.014	101	100	13.1	0.00	0.41		98.3	162.7	159.1	63.6	161.8	88	63	63	62		1.001	3.431	338
1831	292.462	294.455		0.16	0.16	1.36	1.06	0.24	77	76	62	2.00	1.40	64	0.013	104	103	13.1	0.00	0.39		98.1	162.5	159.0	63.6	161.7	88	63	63	62		1.001	3.273	321
1832	292.624	294.616		0.16	0.16	1.36	1.06	0.24	77	76	62	1.99	1.40	68	0.015	98	96	13.1	0.03	0.39		97.8	162.4	158.9	63.6	161.4	109	63	64	62		1.001	3.271	320
1833	292.786	294.778		0.16	0.16	1.36	1.06	0.24	77	76	62	2.00	1.40	71	0.012	109	109	12.9	0.11	0.36		97.6	162.2	158.7	63.6	161.2	140	63	64	62		1.001	3.010	294
1834	292.948	294.939		0.16	0.16	1.35	1.06	0.24	77	76	62	2.01	1.40	72	0.012	109	108	12.7	0.21	0.36		97.5	162.0	158.5	63.7	161.2	157	63	64	62		1.001	3.030	296
1835	293.109	295.100		0.16	0.16	1.36	1.06	0.24	77	75	62	2.00	1.40	73	0.013	105	104	12.3	0.46	0.40		97.2	162.0	158.4	63.7	160.9	171	64	64	62		1.001	3.358	327
1836	293.271	295.261		0.16	0.16	1.36	1.07	0.24	77	75	62	1.99	1.40	77	0.013	106	105	11.9	0.35	0.43		97.3	162.0	158.5	63.7	161.1	190	64	64	62		1.001	3.594	350
1837	293.433	295.423		0.16	0.16	1.36	1.06	0.24	77	75	62	2.01	1.40	79	0.014	102	102	11.9	0.07	0.42		97.3	162.1	158.5	63.7	161.1	210	64	64	62		1.001	3.477	339
1838	293.594	295.583		0.16	0.16	1.36	1.06	0.24	76	75	62	2.00	1.40	81	0.013	106	104	11.5	0.36	0.41		97.6	162.4	158.8	63.7	161.3	223	64	65	62		1.001	3.416	334
1839	293.756	295.744		0.16	0.16	1.36	1.06	0.24	76	75	62	2.02	1.40	82	0.011	116	114	11.4	0.14	0.39		97.8	162.8	159.2	63.7	161.5	233	64	65	62		1.001	3.265	320
1840	293.917	295.906		0.16	0.16	1.35	1.06	0.24	76	75	62	2.02	1.50	83	0.014	102	102	11.0	0.40	0.41		98.3	163.2	159.6	63.7	162.0	241	64	65	62		1.001	3.435	338
1841	294.078	296.066		0.16	0.16	1.35	1.06	0.24	76	75	62	2.02	1.50	85	0.014	102	101	10.7	0.20	0.39		98.9	163.8	160.1	63.7	162.6	249	65	65	62		1.001	3.274	324
1842	294.240	296.226		0.16	0.16	1.35	1.06	0.24	76	75	62	2.02	1.50	87	0.012	111	109	10.3	0.44	0.39		99.3	164.5	160.8	63.9	163.1	258	65	66	62		1.001	3.274	325
1843	294.401	296.387		0.16	0.16	1.35	1.06	0.24	76	75	62	2.02	1.50	88	0.014	102	102	9.9	0.45	0.37		100.0	165.3	161.6	63.9	163.9	269	65	66	62		1.001	3.115	312
1844	294.562	296.547		0.16	0.16	1.35	1.05	0.24	76	75	62	2.03	1.50	89	0.013	106	105	9.7	0.22	0.39		100.7	166.3	162.5	64.1	164.8	279	65	66	62		1.001	3.275	330
1845	294.723	296.707		0.16	0.16	1.36	1.06	0.24	76	75	62	2.04	1.50	90	0.014	103	101	9.3	0.31	0.37		101.8	167.4	163.6	64.1	165.9	290	65	66	62		1.001	3.113	317
1846	294.883	296.868		0.16	0.16	1.35	1.06	0.24	76	75	62	2.04	1.50	92	0.015	99	99	9.1	0.25	0.39		102.9	168.6	164.7	64.1	167.0	298	66	67	62		1.001	3.271	337
1847	295.044	297.028		0.16	0.16	1.34	1.05	0.24	76	75	62	2.05	1.50	93	0.015	99	98	8.6	0.51	0.39		103.9	169.7	165.8	64.3	168.1	304	66	67	62		1.001	3.273	340
1848	295.204	297.187		0.16	0.16	1.35	1.05	0.24	76	75	63	2.05	1.50	94	0.012	111	109	8.2	0.41	0.37		104.7	170.9	166.9	64.5	169.2	310	66	67	63		1.001	3.115	327
1849	295.365	297.347		0.16	0.16	1.35	1.05	0.24	76	75	62	2.04	1.50	95	0.014	103	102	7.8	0.36	0.41		105.5	172.0	168.0	64.8	170.3	315	66	67	62		1.001	3.429	362
1850	295.525	297.506		0.16	0.16	1.34	1.04	0.24	76	75	63	2.06	1.50	96	0.013	106	105	7.5	0.31	0.41		106.5	173.2	169.3	64.9	171.4	319	67	68	63		1.001	3.428	365

Elapsed Time	Particulate Sampling Data																	Fuel Weight, lb		Flow, gpm		Temperature Data, oF													
	Gas Meter Cubic Feet (1)	Gas Meter Cubic Feet (2)	Gas Meter Cubic Feet (amb)	Sample Rate, cfm (1)	Sample Rate, cfm (2)	Orifice dH (1)	Orifice dH (2)	Orifice dH (amb)	Meter oF (1)	Meter oF (2)	Meter oF (amb)	Meter Vac. in. Hg. (1)	Meter Vac. in. Hg. (2)	Dilution Tunnel Temp.	Dilution Tunnel dP	Pro. Rate (%) (1)	Pro. Rate (%) (2)	Scale Reading	Weight Change	Load Side Liquid Flow Rate	Boiler Side Liquid Flow Rate (optional)	Thermopile ΔT	Boiler to Heat Exch. Temp.	Heat Exch to Boiler Temp.	Inlet Load Temp.	Outlet Load Temp.	Stack	Filter (1)	Filter (2)	Ambient		Specific Heat of Inlet Water (BTU/lb-°F)	Mass Flow Rate of Inlet Water (lb/min)	Heat Output, Btu
1851	295.685	297.665		0.16	0.16	1.34	1.04	0.24	76	75	63	2.07	1.50	96	0.013	106	105	7.2	0.34	0.39		107.8	174.3	170.3	65.0	172.8	321	67	68	63		1.001	3.276	354
1852	295.846	297.825		0.16	0.16	1.34	1.04	0.24	76	75	63	2.05	1.50	97	0.014	103	102	6.7	0.44	0.39		108.9	175.5	171.4	65.1	174.0	325	67	68	63		1.001	3.270	356
1853	296.006	297.963		0.16	0.16	1.33	1.04	0.24	76	75	63	2.06	1.50	98	0.014	103	101	6.4	0.37	0.39		109.9	176.6	172.5	65.2	175.1	329	68	68	63		1.001	3.270	360
1854	296.166	298.142		0.16	0.16	1.33	1.03	0.24	76	75	63	2.07	1.50	99	0.014	103	102	5.9	0.41	0.41		110.8	177.9	173.7	65.5	176.3	331	68	69	63		1.001	3.430	381
1855	296.326	298.301		0.16	0.16	1.33	1.04	0.24	76	75	63	2.09	1.50	100	0.013	107	106	5.5	0.41	0.39		111.6	179.2	175.0	65.9	177.5	335	68	69	63		1.001	3.270	365
1856	296.485	298.459		0.16	0.16	1.32	1.03	0.24	76	75	64	2.08	1.50	101	0.013	106	105	5.4	0.18	0.39		112.7	180.4	176.1	66.2	178.8	340	68	69	64		1.001	3.273	369
1857	296.644	298.618		0.16	0.16	1.32	1.03	0.24	76	75	64	2.10	1.50	101	0.014	102	102	4.9	0.44	0.36		113.9	181.7	177.4	66.2	180.1	343	69	70	64		1.001	2.960	338
1858	296.803	298.775		0.16	0.16	1.32	1.03	0.24	76	75	64	2.09	1.50	102	0.014	102	101	4.6	0.30	0.37		115.1	183.0	178.7	66.3	181.5	345	69	70	64		1.001	3.118	359
1859	296.963	298.935		0.16	0.16	1.33	1.05	0.24	76	75	64	2.07	1.50	85	0.013	105	105	4.2	0.41	0.39		115.7	184.4	179.9	66.9	182.6	333	68	69	64		1.001	3.268	379
1860	297.122	299.096		0.16	0.16	1.33	1.05	0.24	76	75	65	2.08	1.50	80	0.014	100	101	4.2	0.00	0.37		116.5	185.2	180.8	67.2	183.7	301	68	69	65		1.001	3.108	362
1861	297.282	299.255		0.16	0.16	1.33	1.05	0.24	76	75	64	2.08	1.50	76	0.015	97	96	4.1	0.09	0.41		116.6	185.6	181.2	67.6	184.2	282	68	68	64		1.001	3.433	401
1862	297.441	299.415		0.16	0.16	1.32	1.04	0.24	76	75	64	2.07	1.50	75	0.013	104	104	4.0	0.10	0.37		117.1	186.1	181.7	67.7	184.8	269	68	69	64		1.001	3.075	360
1863	297.601	299.575		0.16	0.16	1.32	1.04	0.24	76	75	64	2.07	1.50	74	0.012	108	108	3.9	0.07	0.38		117.4	186.4	182.0	67.8	185.2	258	68	69	64		1.001	3.199	376
1864	297.761	299.734		0.16	0.16	1.31	1.04	0.24	76	75	64	2.09	1.50	73	0.013	104	103	3.8	0.11	0.39		117.2	186.6	182.3	68.1	185.3	249	68	69	64		1.001	3.260	383
1865	297.921	299.893		0.16	0.16	1.31	1.04	0.24	76	75	64	2.08	1.50	73	0.014	100	99	3.8	0.08	0.41		117.5	186.8	182.5	68.2	185.7	241	67	69	64		1.001	3.423	403
1866	298.080	300.053		0.16	0.16	1.31	1.04	0.24	76	75	64	2.08	1.50	72	0.012	108	108	3.7	0.05	0.39		117.1	186.9	182.6	68.5	185.6	234	67	68	64		1.001	3.261	382
1867	298.239	300.212		0.16	0.16	1.31	1.04	0.24	76	75	64	2.09	1.50	72	0.014	100	99	3.7	0.01	0.39		117.0	187.0	182.6	68.8	185.8	228	67	68	64		1.001	3.265	382
1868	298.398	300.371		0.16	0.16	1.31	1.04	0.24	76	75	64	2.08	1.50	72	0.013	103	103	3.7	0.03	0.39		117.2	187.2	182.8	68.7	185.9	223	67	68	64		1.001	3.266	383
1869	298.558	300.531		0.16	0.16	1.31	1.04	0.24	76	75	64	2.09	1.50	72	0.012	108	108	3.7	-0.06	0.41		117.1	187.2	182.9	68.8	185.9	218	67	68	64		1.001	3.423	401
1870	298.717	300.690		0.16	0.16	1.32	1.04	0.24	76	75	65	2.09	1.50	72	0.014	100	99	3.6	0.12	0.41		117.1	187.2	182.8	68.9	186.1	213	67	68	65		1.001	3.428	402
1871	298.876	300.850		0.16	0.16	1.32	1.04	0.24	76	75	65	2.07	1.50	71	0.014	100	100	3.7	-0.09	0.37		116.9	187.2	182.9	69.2	186.1	209	67	68	65		1.001	3.105	364
1872	299.035	301.010		0.16	0.16	1.32	1.04	0.24	76	75	65	2.08	1.50	70	0.014	99	100	3.6	0.07	0.39		117.3	187.2	182.9	68.9	186.2	205	67	68	65		1.001	3.268	384
1873	299.195	301.169		0.16	0.16	1.32	1.04	0.24	76	75	65	2.08	1.50	70	0.014	100	99	3.7	-0.03	0.37		117.4	187.2	183.0	68.8	186.1	201	67	68	65		1.001	3.109	365
1874	299.355	301.329		0.16	0.16	1.32	1.04	0.24	76	75	65	2.07	1.50	70	0.013	104	103	3.6	0.04	0.37		117.3	187.2	183.0	68.8	186.1	197	67	68	65		1.001	3.108	365
1875	299.515	301.488		0.16	0.16	1.32	1.04	0.24	76	75	65	2.09	1.50	70	0.015	97	96	3.5	0.09	0.39		117.2	187.2	182.8	68.9	186.1	193	67	67	65		1.001	3.268	383
1876	299.674	301.647		0.16	0.16	1.31	1.04	0.24	76	76	65	2.07	1.50	69	0.011	112	111	3.5	0.01	0.41		117.1	187.2	182.9	69.0	186.1	190	67	67	65		1.001	3.430	402
1877	299.834	301.808		0.16	0.16	1.32	1.04	0.24	76	76	65	2.08	1.50	70	0.013	104	104	3.4	0.09	0.37		117.1	187.1	182.8	69.0	186.0	186	67	67	65		1.001	3.108	364
1878	299.993	301.967		0.16	0.16	1.31	1.04	0.24	76	76	65	2.08	1.50	69	0.014	99	99	3.6	-0.13	0.37		116.8	187.1	182.7	69.1	185.9	182	67	67	65		1.001	3.106	363
1879	300.152	302.126		0.16	0.16	1.31	1.04	0.24	76	76	65	2.08	1.50	69	0.013	103	102	3.4	0.12	0.34		116.5	187.0	182.6	69.2	185.7	179	67	67	65		1.001	2.788	325
1880	300.312	302.287		0.16	0.16	1.32	1.04	0.24	76	76	65	2.08	1.50	69	0.013	104	104	3.5	-0.01	0.37		116.8	186.9	182.6	69.0	185.7	176	67	67	65		1.001	3.108	363
1881	300.471	302.446		0.16	0.16	1.32	1.04	0.24	76	76	65	2.07	1.50	69	0.013	103	102	3.5	-0.07	0.39		116.8	186.9	182.6	69.0	185.8	173	67	67	65		1.001	3.266	382
1882	300.630	302.606		0.16	0.16	1.32	1.05	0.24	76	76	65	2.08	1.50	69	0.014	99	99	3.6	-0.08	0.35		116.6	186.8	182.5	69.2	185.8	170	67	67	65		1.001	2.943	344
1883	300.790	302.766		0.16	0.16	1.32	1.04	0.24	76	76	65	2.08	1.50	69	0.012	108	107	3.4	0.21	0.35		116.6	186.7	182.4	69.0	185.6	167	67	67	65		1.001	2.943	343
1884	300.949	302.925		0.16	0.16	1.32	1.04	0.24	76	76	65	2.07	1.50	69	0.014	99	99	3.5	-0.09	0.35		116.1	186.6	182.3	69.4	185.4	164	66	67	65		1.001	2.944	342
1885	301.109	303.085		0.16	0.16	1.32	1.05	0.24	76	76	65	2.09	1.50	69	0.014	100	99	3.5	-0.01	0.35		115.7	186.5	182.2	69.5	185.2	161	66	67	65		1.001	2.943	341
1886	301.269	303.245		0.16	0.16	1.32	1.04	0.24	76	76	65	2.08	1.50	69	0.013	104	103	3.4	0.07	0.39		115.5	186.3	182.0	69.7	185.2	159	66	67	65		1.001	3.264	377
1887	301.429	303.405		0.16	0.16	1.31	1.04	0.24	76	76	65	2.07	1.50	69	0.013	104	103	3.5	-0.05	0.37		115.5	186.4	182.1	69.6	185.1	157	66	67	65		1.001	3.111	360
1888	301.588	303.564		0.16	0.16	1.32	1.04	0.24	76	76	65	2.07	1.50	69	0.012	107	107	3.5	-0.06	0.41		115.7	186.2	181.9	69.4	185.1	155	66	67	65		1.001	3.425	397
1889	301.748	303.725		0.16	0.16	1.31	1.04	0.24	77	76	65	2.09	1.50	69	0.012	108	108	3.5	0.08	0.35		115.8	186.1	181.8	69.1	184.9	152	66	67	65		1.001	2.952	342
1890	301.907	303.884		0.16	0.16	1.31	1.04	0.24	77	76	65	2.09	1.50	69	0.014	99	99	3.4	0.09	0.43		115.7	185.9	181.7	69.0	184.7	150	66	67	65		1.001	3.585	415
1891	302.066	304.044		0.16	0.16	1.32	1.05	0.24	77	76	65	2.08	1.50	69	0.012	107	107	3.4	-0.04	0.36		115.6	185.9	181.5	69.1	184.7	148	66	67	65		1.001	2.960	343
1892	302.226	304.204		0.16	0.16	1.31	1.04	0.24	77	76	65	2.07	1.50	69	0.015	96	96	3.5	-0.06	0.40		115.3	185.6	181.3	69.2	184.5	146	66	67	65		1.001	3.296	380
1893	302.385	304.364		0.16	0.16	1.32	1.04	0.24	77	76	65	2.08	1.50	69	0.014	99	99	3.5	-0.07	0.40		115.6	185.5	181.3	68.9	184.5	144	66	66	65		1.001	3.310	383
1894	302.545	304.523		0.16	0.16	1.32	1.04	0.24	77	76	65	2.07	1.50	69	0.013	104	102	3.6	-0.08	0.38		115.5	185.5	181.2	68.8	184.4	142	66	67	65		1.001	3.150	364
1895	302.704	304.684		0.16	0.16	1.32	1.04	0.24	77	76	65	2.08	1.50	69	0.015	96	97	3.4	0.22	0.40		115.5	185.4	181.2	68.8	184.3	141	66	66	65		1.001	3.359	388
1896	302.864	304.843		0.16	0.16	1.32	1.04	0.24	77	76	65	2.07	1.50	69	0.014	100	99	3.6	-0.16	0.37		115.6	185.3	181.0	68.6	184.2	139	66	66	65		1.001	3.105	359
1897	303.024	305.003		0.16	0.16	1.32	1.05	0.24	77	76	65	2.07	1.50	69	0.013	104	103	3.5	0.02	0.37		115.4	185.2	180.9	68.7	184.1	137	66	66	65		1.001	3.105	359
1898	303.184	305.164		0.16	0.16	1.31	1.05	0.24	77	76	65	2.08	1.50	69	0.014	100	100	3.4	0.18	0.37		115.1	185.0	180.8	69.0	184.1	136	66	66	65		1.001	3.106	358
1899	303.344	305.323		0.16	0.16	1.32	1.04	0.24	77	76	65	2.08	1.50	69	0.015	96	95	3.5	-0.14	0.37		114.8	184.9	180.7	69.1	183.9	134.00809	66	66	65		1.001	3.106	357
1900	303.503	305.483		0.16	0.16	1.32	1.05	0.24	77	76	65	2.07	1.50	69	0.011	112	112	3.3	0.17	0.39		114.8	184.9	180.7	69.1	183.9	132.89003	66	66	65		1.001	3.266	375
1901	303.662	305.642		0.16	0.16	1.28	1.01	0.24	77	76	65	2.14	1.60	77	0.014	100	99	3.3	0.02	0.43		114.6	184.8	180.6	69.2	183.8	149.9857	67	68	65		1.001	3.589	412
1902	303.819	305.799		0.16	0.16	1.31	1.03	0.24	77	76	65	2.08	1.60	78	0.013	102	102	3.3	-0.03	0.41		114.3	184.5	180.4	69.2	183.5	175.00198	66	67	65		1.001	3.428	392
1903	303.979	305.959		0.16	0.16	1.32	1.04	0.24	77	76	65	2.08	1.50	71	0.014	100	99	3.4	-0.02	0.37		114.9	184.4	180.3	68.6	183.5	169.01979	66	67	65		1.001	3.107	357
1904	304.139	306.120		0.16	0.16	1.33	1.05	0.24	77	76	65	2.06	1.50	70	0.015	96	97	3.4	-0.05	0.37		114.9	184.3	180.1	68.4	183.3	155.0529	66	67	65		1.001	3.107	357
1905	304.299	306.279		0.16	0.16	1.32	1.05	0.24	77	76	65	2.06	1.50	70	0.015	96	95	3.2	0.21	0.39		114.5	184.1	179.9	68.6	183.1	146.40155	66	66	65		1.001	3.265	374
1906	304.459	306.439		0.16	0.16	1.33	1.05	0.24	77	76	65	2.05	1.50	69	0.015	96	96	3.3	-0.12	0.37		114.0	184.1	179.9	69.0	183.0	140.68871	66	66	65		1.001	3.103	354
1907	304.618	306.600		0.16	0.16	1.33	1.05	0.24	77	76	66	2.06	1.50	69	0.015	96	97	3.3	-0.02	0.41		113.9	184.0	179.9	69.2	183.1	137.10962	66	66	66		1.001	3.423	390
1908	304.778	306.760		0.16	0.16	1.33	1.05	0.24	77	77	65	2.07	1.50	69	0.014	100	99	3.2	0.12	0.39		113.8	183.9	179.7	69.1	182.9	134.02802	66	66	65		1.001	3.266	372
1909	304.939	306.920		0.16	0.16	1.33	1.05	0.24	77	77	65	2.06	1.50	69	0.014	100	99	3.2	0.01	0.37		113.5	183.8	179.6	69.2	182.8	131.4341	66	67	65		1.001	3.106	353
1910	305.099	307.081		0.16	0.16	1.32	1.05	0.24	77	77	65	2.06	1.50	69	0.013	104	103	3.3	-0.11	0.41		113.4	183.7	179.4	69.3	182.6	129.19121	66	66	65		1.001	3.427	389
1911	305.259	307.240		0.16	0.16	1.33	1.05	0.24	77	77	65	2.07	1.50	69	0.013	104	102	3.3	0.07	0.39		113.3	183.6	179.4	69.2	182.5	127.49136	66	66	65		1.001	3.264	370
1912	305.419	307.401		0.16	0.16	1.33	1.05	0.24	77	77	65	2.06	1.50	69	0.013	104	103	3.3	-0.01	0.37		113.2	183.4	179.3	69.1	182.4	125.97282	66	66	65		1.001	3.106	352

Elapsed Time	Particulate Sampling Data																	Fuel Weight, lb		Flow, gpm		Temperature Data, oF												
	Gas Meter Cubic Feet (1)	Gas Meter Cubic Feet (2)	Gas Meter Cubic Feet (amb)	Sample Rate, cfm (1)	Sample Rate, cfm (2)	Orifice dH (1)	Orifice dH (2)	Orifice dH (amb)	Meter oF (1)	Meter oF (2)	Meter oF (amb)	Meter Vac. in. Hg. (1)	Meter Vac. in. Hg. (2)	Dilution Tunnel Temp.	Dilution Tunnel dP	Pro. Rate (%) (1)	Pro. Rate (%) (2)	Scale Reading	Weight Change	Load Side Liquid Flow Rate	Boiler Side Liquid Flow Rate (optional)	Thermopile ΔT	Boiler to Heat Exch. Temp.	Heat Exch to Boiler Temp.	Inlet Load Temp.	Outlet Load Temp.	Stack	Filter (1)	Filter (2)	Ambient		Specific Heat of Inlet Water (BTU/lb-°F)	Mass Flow Rate of Inlet Water (lb/min)	Heat Output, Btu
1913	305.579	307.562		0.16	0.16	1.32	1.04	0.24	77	77	65	2.05	1.50	69	0.013	104	103	3.3	-0.02	0.39		113.0	183.3	179.1	69.3	182.3	124.7917	66	66	65		1.001	3.266	369
1914	305.739	307.721		0.16	0.16	1.32	1.04	0.24	77	77	65	2.07	1.50	69	0.014	100	98	3.3	-0.04	0.39		112.9	183.1	179.1	69.3	182.2	122.88376	66	66	65		1.001	3.266	369
1915	305.899	307.881		0.16	0.16	1.32	1.05	0.24	77	77	66	2.07	1.50	69	0.014	100	99	3.4	-0.10	0.39		113.1	183.0	179.0	69.0	182.0	121.70019	66	66	66		1.001	3.266	370
1916	306.059	308.042		0.16	0.16	1.32	1.05	0.24	77	77	65	2.06	1.50	69	0.014	100	100	3.3	0.17	0.41		113.1	182.9	178.8	68.8	181.9	120.22852	66	66	65		1.001	3.412	386
1917	306.219	308.202		0.16	0.16	1.32	1.04	0.24	77	77	65	2.06	1.50	69	0.012	108	107	3.2	0.04	0.39		113.1	182.8	178.7	68.8	181.9	119.40388	66	66	65		1.001	3.228	365
1918	306.379	308.362		0.16	0.16	1.32	1.05	0.24	77	77	65	2.06	1.50	69	0.013	104	103	3.2	0.03	0.39		112.8	182.6	178.6	68.8	181.6	118.21532	66	66	65		1.001	3.243	366
1919	306.538	308.523		0.16	0.16	1.32	1.05	0.24	77	77	65	2.07	1.50	69	0.014	99	100	3.3	-0.06	0.39		112.7	182.5	178.4	68.7	181.4	116.80306	66	66	65		1.001	3.275	369
1920	306.699	308.683		0.16	0.16	1.33	1.04	0.24	77	77	65	2.07	1.50	69	0.014	100	99	3.2	0.05	0.43		112.8	182.4	178.3	68.6	181.4	115.86993	66	66	65		1.001	3.576	404
1921	306.859	308.843		0.16	0.16	1.33	1.05	0.24	77	77	65	2.05	1.50	69	0.015	96	96	3.2	-0.04	0.39		112.4	182.2	178.1	68.8	181.1	114.66288	66	66	65		1.001	3.269	368
1922	307.019	309.003		0.16	0.16	1.33	1.05	0.24	77	77	65	2.07	1.50	69	0.014	100	99	3.4	-0.11	0.36		112.0	182.1	178.0	69.0	181.0	113.63274	66	66	65		1.001	3.012	338
1923	307.179	309.164		0.16	0.16	1.33	1.05	0.24	77	77	65	2.06	1.50	69	0.014	100	100	3.3	0.10	0.36		112.3	181.9	177.9	68.9	181.1	112.82253	66	66	65		1.001	3.030	341
1924	307.339	309.324		0.16	0.16	1.33	1.05	0.24	77	77	65	2.06	1.50	69	0.012	108	107	3.3	-0.01	0.41		112.1	181.8	177.7	68.7	180.8	112.2426	66	66	65		1.001	3.427	385
1925	307.500	309.484		0.16	0.16	1.33	1.05	0.24	77	77	65	2.06	1.50	69	0.013	104	103	3.2	0.05	0.39		111.8	181.6	177.5	68.7	180.5	111.01771	66	66	65		1.001	3.270	366
1926	307.660	309.645		0.16	0.16	1.32	1.04	0.24	77	77	66	2.07	1.50	69	0.014	100	100	3.3	-0.07	0.41		112.2	181.5	177.4	68.3	180.5	110.3104	66	66	66		1.001	3.423	385
1927	307.820	309.805		0.16	0.16	1.32	1.05	0.24	77	77	66	2.05	1.50	69	0.014	100	99	3.3	-0.01	0.37		112.4	181.4	177.4	68.0	180.5	109.4311	66	66	66		1.001	3.106	350
1928	307.980	309.965		0.16	0.16	1.32	1.05	0.24	77	77	66	2.07	1.50	69	0.015	96	96	3.3	0.00	0.35		112.0	181.2	177.1	68.2	180.3	108.78944	66	66	66		1.001	2.947	331
1929	308.140	310.126		0.16	0.16	1.32	1.05	0.24	77	77	66	2.06	1.50	69	0.012	108	108	3.2	0.11	0.37		111.8	181.1	177.0	68.4	180.2	108.19651	66	66	66		1.001	3.106	348
1930	308.300	310.286		0.16	0.16	1.32	1.05	0.24	77	77	66	2.06	1.50	69	0.013	104	103	3.2	-0.02	0.33		111.5	180.9	176.8	68.5	180.0	107.10101	66	66	66		1.001	2.785	311
1931	308.459	310.446		0.16	0.16	1.32	1.05	0.24	77	77	66	2.05	1.50	69	0.014	99	99	3.3	-0.08	0.37		111.3	180.7	176.7	68.5	179.8	106.70837	66	66	66		1.001	3.102	346
1932	308.619	310.607		0.16	0.16	1.32	1.04	0.24	77	77	66	2.06	1.50	69	0.014	100	100	3.3	0.03	0.37		111.0	180.6	176.5	68.6	179.6	106.07803	66	66	66		1.001	3.104	345
1933	308.779	310.766		0.16	0.16	1.31	1.03	0.24	77	77	66	2.09	1.50	77	0.015	97	96	3.1	0.18	0.41		110.9	180.5	176.4	68.5	179.5	138.77385	67	67	66		1.001	3.424	380
1934	308.938	310.926		0.16	0.16	1.33	1.05	0.24	77	77	66	2.07	1.50	73	0.011	112	112	3.2	-0.16	0.41		110.7	180.3	176.2	68.6	179.2	161.67102	67	67	66		1.001	3.425	379
1935	309.098	311.087		0.16	0.16	1.33	1.05	0.24	77	77	66	2.05	1.50	71	0.013	104	104	3.1	0.09	0.41		110.3	180.1	176.0	68.7	179.0	141.81616	67	67	66		1.001	3.423	378
1936	309.258	311.246		0.16	0.16	1.32	1.04	0.24	77	77	66	2.06	1.50	70	0.014	100	99	3.2	-0.04	0.37		110.2	180.0	176.0	68.8	178.9	130.49233	67	67	66		1.001	3.102	342
1937	309.418	311.406		0.16	0.16	1.32	1.05	0.24	77	77	66	2.06	1.50	70	0.012	108	107	3.3	-0.12	0.37		110.0	179.9	175.8	68.7	178.8	123.67997	66	67	66		1.001	3.106	342
1938	309.578	311.567		0.16	0.16	1.33	1.04	0.24	77	77	66	2.06	1.50	70	0.014	100	100	3.2	0.10	0.37		109.8	179.7	175.6	68.8	178.6	119.42383	67	67	66		1.001	3.104	341
1939	309.739	311.727		0.16	0.16	1.33	1.04	0.24	77	77	66	2.07	1.50	69	0.014	100	99	3.1	0.10	0.39		109.6	179.6	175.5	68.9	178.5	116.3525	67	67	66		1.001	3.269	359
1940	309.899	311.887		0.16	0.16	1.32	1.05	0.24	77	77	66	2.05	1.50	69	0.011	113	112	3.2	-0.10	0.41		109.3	179.4	175.3	68.9	178.2	114.11652	67	67	66		1.001	3.424	375
1941	310.059	312.048		0.16	0.16	1.33	1.05	0.24	77	77	65	2.06	1.50	69	0.014	100	100	3.2	-0.04	0.39		109.2	179.2	175.2	68.9	178.1	112.68794	67	67	65		1.001	3.265	357
1942	310.219	312.208		0.16	0.16	1.32	1.05	0.24	77	77	66	2.05	1.50	69	0.014	100	99	3.1	0.10	0.41		109.1	179.1	175.0	68.9	178.0	110.95125	67	67	66		1.001	3.430	375
1943	310.379	312.368		0.16	0.16	1.32	1.05	0.24	77	77	66	2.05	1.50	69	0.015	96	96	3.2	-0.03	0.37		109.3	179.0	174.9	68.7	177.9	109.73688	66	67	66		1.001	3.105	340
1944	310.539	312.528		0.16	0.16	1.32	1.05	0.24	77	77	66	2.07	1.50	69	0.012	108	107	3.3	-0.13	0.41		109.1	178.8	174.8	68.7	177.8	108.56101	67	67	66		1.001	3.417	373
1945	310.699	312.689		0.16	0.16	1.32	1.05	0.24	77	77	66	2.07	1.50	69	0.014	100	100	3.2	0.05	0.40		109.0	178.7	174.6	68.5	177.5	107.63693	67	67	66		1.001	3.332	364
1946	310.859	312.849		0.16	0.16	1.32	1.05	0.24	77	77	66	2.07	1.50	69	0.014	100	99	3.2	0.09	0.39		108.9	178.4	174.5	68.6	177.5	106.47729	66	67	66		1.001	3.215	350
1947	311.019	313.009		0.16	0.16	1.32	1.05	0.24	77	77	66	2.07	1.50	70	0.014	100	99	3.1	0.02	0.43		108.7	178.3	174.4	68.7	177.4	105.66495	67	67	66		1.001	3.579	389
1948	311.179	313.170		0.16	0.16	1.32	1.05	0.24	77	77	66	2.07	1.50	69	0.013	104	103	3.2	-0.04	0.36		108.8	178.2	174.3	68.4	177.2	104.94506	67	67	66		1.001	2.994	326
1949	311.339	313.330		0.16	0.16	1.33	1.05	0.24	77	77	66	2.07	1.50	69	0.013	104	103	3.0	0.18	0.39		108.5	178.0	174.1	68.6	177.1	104.21339	67	67	66		1.001	3.263	355
1950	311.499	313.490		0.16	0.16	1.32	1.05	0.24	77	77	66	2.07	1.50	69	0.016	93	93	3.2	-0.24	0.41		108.4	177.9	173.9	68.5	176.9	103.44673	67	67	66		1.001	3.425	372
1951	311.659	313.651		0.16	0.16	1.33	1.05	0.24	77	77	66	2.07	1.50	69	0.013	104	103	3.0	0.20	0.39		108.2	177.7	173.8	68.6	176.8	102.67077	67	67	66		1.001	3.264	353
1952	311.819	313.811		0.16	0.16	1.33	1.05	0.24	77	77	66	2.06	1.50	69	0.014	100	99	3.1	-0.09	0.43		107.8	177.6	173.6	68.8	176.6	102.12894	67	67	66		1.001	3.575	386
1953	311.979	313.971		0.16	0.16	1.33	1.05	0.24	77	77	66	2.07	1.50	69	0.016	93	93	3.2	-0.02	0.37		107.8	177.4	173.5	68.7	176.5	101.299	67	67	66		1.001	3.104	335
1954	312.140	314.132		0.16	0.16	1.33	1.05	0.24	77	77	66	2.06	1.50	69	0.013	104	103	3.2	-0.07	0.39		107.7	177.2	173.2	68.6	176.3	101.01289	67	67	66		1.001	3.259	351
1955	312.300	314.293		0.16	0.16	1.32	1.05	0.24	77	77	66	2.07	1.50	70	0.011	113	113	3.0	0.18	0.41		107.3	177.1	173.1	68.7	176.0	100.41771	67	67	66		1.001	3.426	368
1956	312.461	314.452		0.16	0.16	1.32	1.05	0.24	77	77	65	2.06	1.50	69	0.013	104	102	3.2	-0.12	0.37		107.4	176.8	172.9	68.5	175.8	99.835938	67	67	65		1.001	3.105	334
1957	312.621	314.613		0.16	0.16	1.33	1.05	0.24	77	77	66	2.07	1.50	70	0.014	100	100	3.1	0.02	0.35		107.3	176.7	172.8	68.4	175.7	99.163762	67	67	66		1.001	2.949	317
1958	312.781	314.774		0.16	0.16	1.33	1.04	0.24	78	77	66	2.07	1.50	70	0.013	103	104	3.1	0.05	0.37		107.1	176.6	172.6	68.4	175.5	98.257134	67	67	66		1.001	3.105	333
1959	312.941	314.934		0.16	0.16	1.32	1.05	0.24	78	77	66	2.06	1.50	69	0.015	96	96	3.2	-0.07	0.41		106.9	176.4	172.5	68.5	175.4	97.688065	67	67	66		1.001	3.425	367
1960	313.101	315.094		0.16	0.16	1.32	1.05	0.24	78	77	66	2.05	1.50	69	0.012	108	107	3.2	-0.06	0.39		107.1	176.3	172.4	68.3	175.4	97.270241	67	67	66		1.001	3.264	350
1961	313.261	315.255		0.16	0.16	1.32	1.05	0.24	78	77	66	2.06	1.50	69	0.015	96	96	3.1	0.09	0.37		106.7	176.1	172.3	68.5	175.2	96.780739	67	67	66		1.001	3.104	332
1962	313.421	315.415		0.16	0.16	1.32	1.05	0.24	78	77	66	2.06	1.50	69	0.014	100	99	3.1	0.03	0.37		106.7	175.9	172.1	68.3	175.0	96.201737	67	67	66		1.001	3.105	332
1963	313.581	315.575		0.16	0.16	1.32	1.05	0.24	78	77	66	2.05	1.50	69	0.014	100	99	3.2	-0.09	0.35		106.6	175.8	172.0	68.3	174.9	95.495606	67	67	66		1.001	2.944	314
1964	313.741	315.736		0.16	0.16	1.32	1.04	0.24	78	77	66	2.06	1.50	72	0.014	100	100	3.2	0.02	0.35		106.3	175.6	171.7	68.3	174.7	95.309166	67	67	66		1.001	2.946	314
1965	313.901	315.895		0.16	0.16	1.32	1.04	0.24	78	77	66	2.06	1.50	74	0.013	104	103	3.1	0.13	0.35		106.3	175.4	171.6	68.2	174.5	137.92256	67	67	66		1.001	2.946	314
1966	314.061	316.056		0.16	0.16	1.32	1.05	0.24	78	77	66	2.05	1.50	71	0.013	104	104	3.0	0.00	0.41		106.1	175.3	171.4	68.2	174.3	136.70546	67	67	66		1.001	3.421	363
1967	314.221	316.217		0.16	0.16	1.33	1.05	0.24	78	78	66	2.06	1.50	70	0.017	90	90	3.1	-0.07	0.37		106.0	175.1	171.2	68.1	174.2	122.32739	67	67	66		1.001	3.105	330
1968	314.381	316.376		0.16	0.16	1.32	1.05	0.24	78	78	66	2.06	1.50	70	0.014	100	98	3.3	-0.22	0.39		105.9	174.9	171.1	68.1	174.0	114.48472	67	67	66		1.001	3.264	346
1969	314.541	316.537		0.16	0.16	1.33	1.05	0.24	78	78	66	2.05	1.50	70	0.014	100	100	3.1	0.29	0.37		105.7	174.8	170.9	68.1	173.8	109.48959	67	67	66		1.001	3.104	329
1970	314.702	316.698		0.16	0.16	1.33	1.05	0.24	78	78	66	2.05	1.50	69	0.015	97	96	3.1	-0.07	0.41		105.5	174.6	170.7	68.1	173.6	106.12214	67	67	66		1.001	3.420	361
1971	314.862	316.857		0.16	0.16	1.33	1.04	0.24	78	78	66	2.06	1.50	69	0.012	108	106	3.1	0.02	0.41		105.4	174.4	170.6	68.1	173.5	104.14038	67	67	66		1.001	3.423	361
1972	315.023	317.018		0.16	0.16	1.33	1.05	0.24	78	78	66	2.07	1.50	69	0.013	104	103	3.2	-0.08	0.37		105.1	174.3	170.4	68.1	173.2	102.43822	67	67	66		1.001	3.104	327
1973	315.183	317.179		0.16	0.16	1.32	1.04	0.24	78	78	66	2.05	1.50	69	0.013	103	103	3.2	0.02	0.41		105.1	174.1	170.3	68.1	173.2	101.26227	67	67	66		1.001	3.425	360
1974	315.343	317.339		0.16	0.16	1.32	1.04	0.24	78	78	66	2.05	1.50	70	0.014	100	99	3.2	-0.06	0.35		105.2	174.0	170.2	68.0	173.1	100.34145	67	67	66		1.001	2.947	310

Elapsed Time	Particulate Sampling Data																	Fuel Weight, lb		Flow, gpm		Temperature Data, oF													
	Gas Meter Cubic Feet (1)	Gas Meter Cubic Feet (2)	Gas Meter Cubic Feet (amb)	Sample Rate, cfm (1)	Sample Rate, cfm (2)	Orifice dH (1)	Orifice dH (2)	Orifice dH (amb)	Meter oF (1)	Meter oF (2)	Meter oF (amb)	Meter Vac. in. Hg. (1)	Meter Vac. in. Hg. (2)	Dilution Tunnel Temp.	Dilution Tunnel dP	Pro. Rate (%) (1)	Pro. Rate (%) (2)	Scale Reading	Weight Change	Load Side Liquid Flow Rate	Boiler Side Liquid Flow Rate (optional)	Thermopile ΔT	Boiler to Heat Exch. Temp.	Heat Exch to Boiler Temp.	Inlet Load Temp.	Outlet Load Temp.	Stack	Filter (1)	Filter (2)	Ambient		Specific Heat of Inlet Water (BTU/lb-°F)	Mass Flow Rate of Inlet Water (lb/min)	Heat Output, Btu
1975	315.503	317.499		0.16	0.16	1.32	1.05	0.24	78	78	66	2.06	1.50	69	0.013	103	103	3.2	0.01	0.37		104.9	173.9	170.0	68.1	172.9	99.648712	67	67	66		1.001	3.099	325
1976	315.664	317.659		0.16	0.16	1.32	1.05	0.24	78	78	66	2.05	1.50	69	0.013	104	103	3.1	0.13	0.41		104.7	173.7	169.8	68.0	172.7	98.967888	67	67	66		1.001	3.373	353
1977	315.823	317.820		0.16	0.16	1.31	1.04	0.24	78	78	66	2.07	1.50	69	0.013	103	103	3.2	-0.13	0.43		104.6	173.5	169.7	67.9	172.5	98.185753	67	67	66		1.001	3.538	371
1978	315.983	317.980		0.16	0.16	1.32	1.04	0.24	78	78	66	2.05	1.50	69	0.014	100	99	3.1	0.15	0.38		104.3	173.3	169.5	68.1	172.3	97.582909	67	67	66		1.001	3.172	331
1979	316.144	318.140		0.16	0.16	1.32	1.05	0.24	78	78	66	2.07	1.50	70	0.013	104	103	3.1	0.01	0.41		104.2	173.1	169.3	68.0	172.2	97.148872	67	67	66		1.001	3.426	357
1980	316.304	318.302		0.16	0.16	1.33	1.05	0.24	78	78	66	2.05	1.50	70	0.015	96	97	3.2	-0.10	0.39		104.1	172.9	169.1	67.8	171.9	96.366058	67	67	66		1.001	3.263	340
1981	316.464	318.461		0.16	0.16	1.32	1.05	0.24	78	78	66	2.07	1.50	70	0.016	93	92	3.0	0.13	0.41		103.8	172.7	168.9	67.9	171.8	95.589645	67	67	66		1.001	3.425	356
1982	316.624	318.622		0.16	0.16	1.32	1.04	0.24	78	78	66	2.05	1.50	70	0.013	103	103	3.2	-0.13	0.39		103.6	172.6	168.8	67.9	171.5	94.943871	67	67	66		1.001	3.265	339
1983	316.784	318.783		0.16	0.16	1.32	1.05	0.24	78	78	66	2.06	1.50	69	0.015	96	96	3.1	0.02	0.39		103.7	172.4	168.6	67.7	171.4	94.656548	67	67	66		1.001	3.266	339
1984	316.944	318.942		0.16	0.16	1.33	1.05	0.24	78	78	66	2.07	1.50	69	0.013	103	102	3.2	-0.04	0.39		103.8	172.3	168.6	67.5	171.3	94.09613	67	67	66		1.001	3.265	339
1985	317.104	319.103		0.16	0.16	1.33	1.05	0.24	78	78	66	2.06	1.50	69	0.013	103	103	3.1	0.13	0.41		103.7	172.0	168.3	67.5	171.2	94.082512	67	67	66		1.001	3.425	355
1986	317.265	319.264		0.16	0.16	1.33	1.04	0.24	78	78	66	2.07	1.50	70	0.014	100	100	3.1	-0.04	0.37		103.3	171.9	168.2	67.6	171.0	93.28508	67	67	66		1.001	3.106	321
1987	317.425	319.424		0.16	0.16	1.33	1.04	0.24	78	78	66	2.05	1.50	69	0.015	96	96	3.1	-0.05	0.33		103.2	171.8	168.1	67.7	170.9	92.620079	67	67	66		1.001	2.782	287
1988	317.586	319.584		0.16	0.16	1.33	1.05	0.24	78	78	66	2.07	1.50	69	0.014	100	99	3.1	0.05	0.35		102.9	171.6	167.9	67.9	170.7	92.949661	67	67	66		1.001	2.944	303
1989	317.746	319.745		0.16	0.16	1.32	1.05	0.24	78	78	66	2.06	1.50	69	0.013	103	103	3.1	0.01	0.41		102.7	171.4	167.7	67.9	170.6	92.805924	67	67	66		1.001	3.426	352
1990	317.907	319.906		0.16	0.16	1.32	1.05	0.24	78	78	66	2.05	1.50	70	0.014	100	100	3.1	-0.02	0.39		102.4	171.3	167.6	68.0	170.4	92.423378	67	67	66		1.001	3.266	335
1991	318.066	320.065		0.16	0.16	1.32	1.05	0.24	78	78	66	2.06	1.50	70	0.013	103	102	3.1	0.01	0.39		102.1	171.1	167.4	67.9	170.0	91.610321	67	67	66		1.001	3.266	334
1992	318.227	320.226		0.16	0.16	1.32	1.05	0.24	78	78	66	2.05	1.50	70	0.014	100	100	3.1	0.02	0.41		102.3	170.9	167.2	67.7	170.0	90.954865	67	67	66		1.001	3.425	351
1993	318.387	320.387		0.16	0.16	1.31	1.05	0.24	78	78	66	2.05	1.50	70	0.015	96	96	3.1	-0.01	0.39		102.2	170.7	167.0	67.6	169.9	90.563042	67	67	66		1.001	3.266	334
1994	318.547	320.547		0.16	0.16	1.32	1.05	0.24	78	78	66	2.05	1.50	70	0.013	103	103	3.1	-0.03	0.43		101.9	170.6	166.8	67.7	169.6	90.360596	67	67	66		1.001	3.565	366
1995	318.707	320.707		0.16	0.16	1.32	1.05	0.24	78	78	66	2.05	1.50	70	0.014	100	99	3.1	0.00	0.39		101.8	170.4	166.7	67.7	169.5	90.242386	67	67	66		1.001	3.267	333
1996	318.867	320.868		0.16	0.16	1.32	1.05	0.24	78	78	66	2.06	1.50	73	0.015	97	97	3.1	0.06	0.37		101.7	170.3	166.6	67.6	169.3	113.04003	67	67	66		1.001	3.104	316
1997	319.027	321.028		0.16	0.16	1.32	1.05	0.24	78	78	66	2.06	1.50	72	0.014	100	99	3.2	-0.09	0.37		101.4	170.1	166.4	67.7	169.1	137.5929	67	67	66		1.001	3.105	315
1998	319.187	321.188		0.16	0.16	1.32	1.05	0.24	78	78	66	2.07	1.50	70	0.013	103	103	3.1	0.01	0.37		101.1	169.9	166.2	67.8	168.9	122.23724	67	67	66		1.001	3.102	314
1999	319.347	321.349		0.16	0.16	1.32	1.05	0.24	78	78	66	2.06	1.50	70	0.014	100	100	3.2	-0.07	0.38		100.7	169.8	166.1	68.0	168.7	111.6209	67	67	66		1.001	3.194	322
2000	319.508	321.509		0.16	0.16	1.32	1.05	0.24	78	78	66	2.06	1.50	70	0.012	108	107	3.2	0.03	0.44		100.9	169.6	166.0	67.8	168.7	105.47278	67	67	66		1.001	3.690	373
2001	319.668	321.669		0.16	0.16	1.33	1.04	0.24	78	78	66	2.07	1.50	70	0.013	103	103	3.1	0.05	0.43		100.8	169.5	165.8	67.6	168.5	102.12113	67	67	66		1.001	3.567	362
2002	319.828	321.830		0.16	0.16	1.33	1.04	0.24	78	78	66	2.07	1.50	70	0.015	96	96	3.1	0.02	0.42		100.9	169.3	165.6	67.5	168.4	99.873009	67	67	66		1.001	3.486	352
2003	319.988	321.990		0.16	0.16	1.33	1.05	0.24	78	78	66	2.07	1.50	70	0.014	100	99	3.0	0.10	0.38		100.4	169.1	165.5	67.7	168.1	98.459099	67	67	66		1.001	3.142	316
2004	320.149	322.150		0.16	0.16	1.32	1.05	0.24	78	78	66	2.06	1.50	70	0.012	108	107	3.1	-0.07	0.35		100.4	169.0	165.4	67.6	168.0	97.794411	67	67	66		1.001	2.944	296
2005	320.309	322.311		0.16	0.16	1.32	1.05	0.24	78	78	66	2.06	1.50	70	0.014	100	100	3.1	0.01	0.37		100.2	168.8	165.2	67.7	167.9	96.865143	67	67	66		1.001	3.108	312
2006	320.470	322.472		0.16	0.16	1.32	1.05	0.24	78	78	66	2.07	1.50	70	0.012	108	108	3.1	-0.02	0.39		100.1	168.6	165.0	67.6	167.7	95.487587	67	67	66		1.001	3.263	327
2007	320.630	322.632		0.16	0.16	1.33	1.04	0.24	78	78	66	2.05	1.50	69	0.015	96	96	3.0	0.10	0.41		99.7	168.4	164.8	67.8	167.5	94.952736	67	67	66		1.001	3.429	342
2008	320.790	322.792		0.16	0.16	1.33	1.04	0.24	78	78	66	2.07	1.50	70	0.013	103	103	3.1	-0.13	0.37		99.8	168.3	164.7	67.7	167.5	94.373024	67	67	66		1.001	3.104	310
2009	320.950	322.953		0.16	0.16	1.33	1.05	0.24	78	78	66	2.05	1.50	69	0.015	96	96	3.1	0.00	0.37		99.7	168.1	164.5	67.6	167.3	93.197937	67	67	66		1.001	3.106	310
2010	321.111	323.113		0.16	0.16	1.32	1.05	0.24	78	78	66	2.06	1.50	69	0.014	100	99	3.1	-0.03	0.35		99.7	168.0	164.4	67.4	167.1	92.724632	67	67	66		1.001	2.942	294
2011	321.271	323.274		0.16	0.16	1.32	1.05	0.24	78	78	66	2.06	1.50	69	0.014	100	100	3.0	0.15	0.37		99.4	167.8	164.2	67.5	166.9	92.781014	67	67	66		1.001	3.107	309
2012	321.431	323.435		0.16	0.16	1.32	1.05	0.24	78	78	66	2.07	1.50	70	0.014	100	100	3.0	-0.05	0.35		99.1	167.6	164.0	67.6	166.6	92.063713	67	67	66		1.001	2.946	292
2013	321.591	323.594		0.16	0.16	1.32	1.05	0.24	78	78	66	2.07	1.50	70	0.013	103	102	3.1	-0.10	0.32		99.1	167.5	163.9	67.4	166.5	91.992249	67	67	66		1.001	2.624	260
2014	321.751	323.755		0.16	0.16	1.32	1.05	0.24	78	78	66	2.07	1.50	70	0.015	96	96	3.1	0.06	0.37		98.9	167.3	163.7	67.4	166.4	91.000732	67	67	66		1.001	3.107	308
2015	321.911	323.916		0.16	0.16	1.32	1.05	0.24	78	78	66	2.05	1.50	70	0.013	103	103	3.1	0.01	0.39		99.1	167.2	163.6	67.2	166.3	90.974442	67	67	66		1.001	3.265	324
2016	322.071	324.076		0.16	0.16	1.33	1.04	0.24	78	78	66	2.06	1.50	70	0.014	100	99	3.1	-0.08	0.43		98.8	167.0	163.5	67.3	166.1	90.36335	67	67	66		1.001	3.587	355
2017	322.232	324.236		0.16	0.16	1.33	1.05	0.24	78	78	66	2.07	1.50	69	0.013	104	103	3.1	0.07	0.43		98.7	166.9	163.3	67.2	166.0	89.664078	67	67	66		1.001	3.586	354
2018	322.392	324.397		0.16	0.16	1.32	1.05	0.24	78	78	66	2.06	1.50	70	0.014	100	100	3.1	-0.07	0.37		98.6	166.7	163.1	67.2	165.7	89.586762	67	67	66		1.001	3.103	306
2019	322.552	324.557		0.16	0.16	1.32	1.04	0.24	78	78	66	2.06	1.50	70	0.014	100	99	3.1	0.09	0.41		98.6	166.5	163.0	67.0	165.6	88.956238	67	67	66		1.001	3.423	338
2020	322.712	324.717		0.16	0.16	1.33	1.05	0.24	78	78	66	2.05	1.50	70	0.016	93	93	3.1	-0.09	0.63		99.1	166.4	161.8	66.3	165.4	88.857674	67	67	66		1.001	5.207	517
2021	322.873	324.878		0.16	0.16	1.33	1.05	0.24	78	78	66	2.05	1.50	70	0.014	100	100	3.0	0.17	0.66		101.7	165.7	160.4	63.3	165.0	88.478073	67	67	66		1.001	5.520	562
2022	323.033	325.039		0.16	0.16	1.32	1.05	0.24	78	78	66	2.05	1.50	70	0.013	103	103	3.1	-0.14	0.62		101.8	165.2	160.2	62.9	164.7	87.726196	67	67	66		1.001	5.198	530
2023	323.194	325.199		0.16	0.16	1.32	1.05	0.24	78	78	66	2.05	1.50	70	0.015	97	96	3.2	-0.09	0.64		101.7	165.0	159.8	62.6	164.3	87.53907	67	67	66		1.001	5.362	546
2024	323.354	325.359		0.16	0.16	1.32	1.05	0.24	78	78	66	2.06	1.50	70	0.013	103	103	3.0	0.17	0.62		101.7	164.7	159.5	62.4	164.1	87.322151	67	67	66		1.001	5.203	530
2025	323.514	325.520		0.16	0.16	1.33	1.04	0.24	78	78	66	2.06	1.50	70	0.014	100	100	3.0	-0.01	0.68		101.4	164.3	159.1	62.3	163.7	87.423508	67	67	66		1.001	5.689	578
2026	323.674	325.680		0.16	0.16	1.32	1.05	0.24	78	78	66	2.07	1.50	70	0.014	100	99	3.1	-0.10	0.59		101.3	164.0	158.9	62.1	163.4	86.975845	67	67	66		1.001	4.877	495
2027	323.835	325.840		0.16	0.16	1.31	1.05	0.24	78	78	66	2.07	1.50	72	0.015	97	96	3.0	0.17	0.64		101.1	163.7	158.7	62.0	163.1	86.942658	67	67	66		1.001	5.365	543
2028	323.995	326.001		0.16	0.16	1.32	1.05	0.24	78	78	66	2.07	1.50	74	0.017	91	91	3.1	-0.13	0.60		100.8	163.4	158.4	62.0	162.8	123.63778	67	67	66		1.001	5.038	508
2029	324.154	326.161		0.16	0.16	1.32	1.05	0.24	78	78	66	2.07	1.50	71	0.014	99	99	3.1	0.03	0.62		100.6	163.1	158.1	61.8	162.5	128.66209	67	67	66		1.001	5.203	524
2030	324.315	326.321		0.16	0.16	1.32	1.05	0.24	78	78	66	2.07	1.50	70	0.014	100	99	3.0	0.06	0.60		100.5	162.8	157.9	61.7	162.2	114.44852	67	67	66		1.001	5.037	507
2031	324.475	326.482		0.16	0.16	1.32	1.05	0.24	78	78	66	2.06	1.50	70	0.014	100	100	3.0	0.01	0.60		100.1	162.6	157.6	61.8	162.0	106.21458	67	67	66		1.001	5.039	505
2032	324.635	326.642		0.16	0.16	1.32	1.04	0.24	78	78	66	2.06	1.50	70	0.015	96	96	3.1	-0.11	0.47		99.5	162.4	158.6	62.2	161.7	101.46063	67	67	66		1.001	3.910	390
2033	324.795	326.802		0.16	0.16	1.32	1.05	0.24	78	78	66	2.06	1.50	70	0.013	103	103	3.1	0.04	0.47		99.1	162.4	158.5	62.7	161.7	98.296463	67	67	66		1.001	3.921	389
2034	324.955	326.963		0.16	0.16	1.32	1.05	0.24	78	78	66	2.05	1.50	70	0.014	100	100	3.1	-0.03	0.42		98.5	162.2	158.3	62.9	161.5	96.547875	67	67	66		1.001	3.493	345
2035	325.115	327.124		0.16	0.16	1.32	1.04	0.24	78	78	66	2.05	1.50	74	0.013	104	104	2.9	0.17	0.49		97.8	162.0	158.0	63.4	161.2	121.21773	67	67	66		1.001	4.059	397
2036	325.276	327.284		0.16	0.16	1.32	1.05	0.24	78	78	66	2.05	1.50	75	0.014	101	99	2.8	0.15	0.47		96.9	161.8	157.7	64.2	161.0	141.12804	67	67	66		1.001	3.946	383

Elapsed Time	Particulate Sampling Data																	Fuel Weight, lb		Flow, gpm		Temperature Data, oF												
	Gas Meter Cubic Feet (1)	Gas Meter Cubic Feet (2)	Gas Meter Cubic Feet (amb)	Sample Rate, cfm (1)	Sample Rate, cfm (2)	Orifice dH (1)	Orifice dH (2)	Orifice dH (amb)	Meter oF (1)	Meter oF (2)	Meter oF (amb)	Meter Vac. in. Hg. (1)	Meter Vac. in. Hg. (2)	Dilution Tunnel Temp.	Dilution Tunnel dP	Pro. Rate (%) (1)	Pro. Rate (%) (2)	Scale Reading	Weight Change	Load Side Liquid Flow Rate	Boiler Side Liquid Flow Rate (optional)	Thermopile ΔT	Boiler to Heat Exch. Temp.	Heat Exch to Boiler Temp.	Inlet Load Temp.	Outlet Load Temp.	Stack	Filter (1)	Filter (2)	Ambient		Specific Heat of Inlet Water (BTU/lb-°F)	Mass Flow Rate of Inlet Water (lb/min)	Heat Output, Btu
2037	325.436	327.444		0.16	0.16	1.32	1.05	0.24	78	78	66	2.06	1.50	76	0.013	104	103	2.9	-0.13	0.45		96.1	161.6	157.5	64.7	160.7	148.85585	67	67	66		1.001	3.743	360
2038	325.596	327.605		0.16	0.16	1.33	1.05	0.24	78	78	66	2.06	1.50	76	0.013	104	104	2.9	0.06	0.45		95.5	161.4	157.3	65.0	160.5	153.83308	67	68	66		1.001	3.738	357
2039	325.757	327.765		0.16	0.16	1.32	1.04	0.24	78	78	66	2.05	1.50	77	0.014	101	100	2.8	0.06	0.45		95.2	161.3	157.2	65.2	160.4	159.24777	67	68	66		1.001	3.741	357
2040	325.917	327.925		0.16	0.16	1.33	1.05	0.24	78	78	66	2.05	1.50	78	0.012	108	108	2.7	0.06	0.47		95.0	161.1	157.1	65.2	160.2	165.60756	68	68	66		1.001	3.907	372
2041	326.077	328.086		0.16	0.16	1.31	1.05	0.24	78	78	66	2.06	1.50	78	0.013	104	104	2.4	0.35	0.45		95.0	160.9	156.9	65.1	160.1	172.29524	68	68	66		1.001	3.736	355
2042	326.237	328.245		0.16	0.16	1.32	1.05	0.24	78	78	66	2.07	1.50	80	0.013	104	103	2.3	0.07	0.49		94.8	160.8	156.7	65.1	159.9	179.62723	68	68	66		1.001	4.061	385
2043	326.397	328.405		0.16	0.16	1.31	1.04	0.24	78	78	66	2.07	1.50	83	0.014	101	100	2.1	0.21	0.45		94.8	160.8	156.7	65.1	159.9	193.60606	68	68	66		1.001	3.750	356
2044	326.556	328.566		0.16	0.16	1.31	1.04	0.24	78	78	66	2.07	1.50	85	0.013	104	105	1.8	0.31	0.45		95.0	160.9	156.8	64.9	160.0	207.57663	68	68	66		1.001	3.739	356
2045	326.715	328.724		0.16	0.16	1.31	1.03	0.24	78	78	66	2.10	1.60	86	0.015	97	96	1.6	0.22	0.45		95.1	161.1	157.0	65.0	160.1	218.96359	68	69	66		1.001	3.739	356
2046	326.875	328.883		0.16	0.16	1.31	1.04	0.24	78	78	66	2.09	1.60	87	0.013	105	104	1.3	0.25	0.45		95.3	161.5	157.4	65.0	160.4	228.32488	69	69	66		1.001	3.744	357
2047	327.033	329.043		0.16	0.16	1.31	1.03	0.24	78	78	66	2.11	1.60	88	0.014	100	101	1.0	0.32	0.45		96.1	162.1	157.9	64.8	160.9	236.73868	69	69	66		1.001	3.745	360
2048	327.192	329.201		0.16	0.16	1.31	1.03	0.24	78	78	66	2.12	1.60	89	0.015	97	96	0.7	0.27	0.49		96.9	162.6	158.4	64.6	161.5	244.79604	69	69	66		1.001	4.063	394
2049	327.351	329.360		0.16	0.16	1.30	1.02	0.24	78	78	66	2.14	1.60	90	0.013	105	104	0.4	0.30	0.43		97.2	163.2	159.0	64.8	162.0	252.55164	69	69	66		1.001	3.585	349
2050	327.510	329.518		0.16	0.16	1.29	1.02	0.24	78	78	66	2.13	1.60	91	0.014	101	100	0.1	0.29	0.47		97.9	164.0	159.7	64.8	162.7	260.73563	69	70	66		1.001	3.904	383
2051	327.668	329.675	489.424	0.16	0.16	1.29	1.01	0.24	78	78	66	2.15	1.60	92	0.015	97	96	0.0	0.14	0.49		98.5	164.7	160.3	64.9	163.4	267.67212	70	70	66		1.001	4.064	401
	327.668	329.675	489.424			1.33	1.06	0.24	77	76	64			72	0.014					0.37	#DIV/0!	110.3	175.9	172.8	64.7	175.1		66.04	66.27		#DIV/0!			340
																																	TOTAL:	697496

OMNI-Test Laboratories

Manufacturer: Central Boiler
Model: Edge 360
Date: 12/16/19
Run: 4
Control #: 0117WB040E
Test Duration: 2051
Output Category: I

Technicians: _____

Test Results in Accordance with CSA B415.1-09

	HHV Basis	LHV Basis
Overall Efficiency	74.6%	80.4%
Combustion Efficiency	96.2%	96.2%
Heat Transfer Efficiency	78%	83.5%

Output Rate (kJ/h)	19,300	18,308	**(Btu/h)**
Burn Rate (kg/h)	1.30	2.87	**(lb/h)**
Input (kJ/h)	25,858	24,529	**(Btu/h)**

Test Load Weight (dry kg)	44.45	97.96	**dry lb**
MC wet (%)	18.23		
MC dry (%)	22.29		
Particulate (g)	38.69		
CO (g)	3,550		
Test Duration (h)	34.18		

Emissions	**Particulate**	**CO**
g/MJ Output	0.06	5.38
g/kg Dry Fuel	0.87	79.88
g/h	1.13	103.87
lb/MM Btu Output	0.14	12.51

Air/Fuel Ratio (A/F)	35.05

VERSION: 2.2 12/14/2009

VERSION: 2.2 12/14/2009

Manufacturer: Central Boiler
Model: Edge 360
Date: 12/16/2019
Run: 4
Control #: 0117WB040E
Test Duration: 2051
Input Category: I

Appliance Type: Non-Cat (Cat, Non

Temp. Units F (F or C)
Weight Units lb (kg or lb)

Fuel Data

			Oak	
Wood Moisture (% wet):	18.23	**HHV**	19,887	kj/kg
Load Weight (lb wet):	119.80	**%C**	50	
Burn Rate (dry kg/h):	1.30	**%H**	6.6	
Total Particulate Emissions:	38.69 g	**%O**	42.9	
		%ASH	0.5	

	Averages	**0.37**	**3.12**	**#DIV/0!**	**144.66**	**64.37**
					Temp. (ºF)	
Elapsed	**Fuel Weight**	**Flue Gas Composition (%)**			**Flue**	**Room**
Time (min)	**Remaining (lb)**	**CO**	**CO_2**	**O_2**	**Gas**	**Temp**
0	119.8	0.1	17.3		291	63
1	119.4	0.1	16.9		279	63
2	118.9	0.5	3.7		252	63
3	118.3	0.2	12.0		267	63
4	117.6	0.1	17.8		288	63
5	117.1	0.1	17.6		301	63
6	116.5	0.1	17.3		310	63
7	115.9	0.1	17.2		317	63
8	115.5	0.1	17.1		322	63
9	115.1	0.1	17.1		327	63
10	114.4	0.1	16.8		331	63
11	114.0	0.1	16.7		334	63
12	113.5	0.1	16.8		336	64
13	113.0	0.1	16.6		339	64
14	112.4	0.1	16.4		341	64
15	112.0	0.1	16.4		343	64
16	111.5	0.1	16.5		346	64
17	111.1	0.1	16.6		348	64
18	110.9	0.6	16.1		336	64
19	110.9	0.2	16.2		312	64
20	110.9	0.2	13.8		290	64
21	110.9	0.1	8.5		274	64

22	110.8	0.0	5.6		261	64
23	110.8	0.1	4.4		251	64
24	110.8	0.1	3.7		243	64
25	110.7	0.1	2.9		236	64
26	110.5	0.1	2.4		230	64
27	110.8	0.1	2.0		224	64
28	110.8	0.1	1.8		219	64
29	110.7	0.1	1.7		214	64
30	110.7	0.1	1.6		210	64
31	110.6	0.1	1.3		207	65
32	110.7	0.0	0.9		203	65
33	110.7	0.0	0.6		199	65
34	110.7	0.0	0.5		195	65
35	110.6	0.0	0.5		192	64
36	110.7	0.1	0.7		187	64
37	110.6	0.1	0.8		184	64
38	110.7	0.1	1.0		180	64
39	110.6	0.2	1.3		177	64
40	110.6	0.2	1.3		174	64
41	110.6	0.2	1.5		171	64
42	110.6	0.2	1.6		167	64
43	110.7	0.2	1.7		165	64
44	110.6	0.2	1.7		162	63
45	110.6	0.2	1.7		160	63
46	110.7	0.2	1.7		157	63
47	110.7	0.2	1.7		154	63
48	110.6	0.2	1.7		152	63
49	110.6	0.2	1.6		150	63
50	110.7	0.2	1.7		148	63
51	110.7	0.2	1.6		146	63
52	110.6	0.2	1.6		144	63
53	110.6	0.2	1.5		142	63
54	110.6	0.2	1.5		140	63
55	110.8	0.2	1.4		138	63
56	110.5	0.2	1.5		136	63
57	110.7	0.2	1.4		134	63
58	110.6	0.2	1.4		132	63
59	110.7	0.2	1.3		130	63
60	110.6	0.2	1.3		129	63
61	110.3	0.6	2.7		164	63
62	110.3	3.6	8.4		193	62
63	110.3	2.8	8.2		169	62

64	110.4	2.5	7.0		155	62
65	110.3	2.4	6.3		146	62
66	110.4	2.3	5.8		141	62
67	110.3	2.2	5.5		137	62
68	110.3	1.9	5.0		134	62
69	110.2	1.8	4.7		131	62
70	110.3	1.7	4.3		129	62
71	110.4	1.5	3.9		128	62
72	110.4	1.4	3.7		126	62
73	110.4	1.2	3.4		124	62
74	110.3	1.1	3.0		122	62
75	110.3	1.0	2.8		121	62
76	110.3	0.9	2.5		120	62
77	110.3	0.8	2.3		119	62
78	110.3	0.7	2.1		117	62
79	110.3	0.7	2.0		116	62
80	110.3	0.6	1.8		114	62
81	110.3	0.6	1.7		113	62
82	110.4	0.5	1.6		112	62
83	110.3	0.5	1.5		111	63
84	110.4	0.5	1.4		110	63
85	110.4	0.4	1.3		109	63
86	110.4	0.4	1.2		109	63
87	110.4	0.4	1.2		107	63
88	110.4	0.4	1.2		106	64
89	110.3	0.4	1.1		106	63
90	110.4	0.4	1.1		105	63
91	110.4	0.3	1.0		104	63
92	110.0	0.3	1.0		105	63
93	109.9	1.2	5.8		166	63
94	110.0	4.8	8.9		166	63
95	109.9	3.9	7.4		146	63
96	110.1	3.7	6.7		134	63
97	110.0	3.6	6.3		127	63
98	109.9	3.3	5.9		122	63
99	109.9	3.1	5.5		119	63
100	110.0	2.8	5.1		117	63
101	110.0	2.5	4.8		115	63
102	109.9	2.3	4.5		114	63
103	109.9	2.2	4.3		112	63
104	109.8	2.0	4.0		111	62
105	110.0	1.7	3.6		110	62

106	109.9	1.6	3.4		108	62
107	109.9	1.5	3.1		108	62
108	110.0	1.3	2.9		107	62
109	109.9	1.2	2.7		105	62
110	110.0	1.1	2.5		105	62
111	109.9	1.0	2.3		104	62
112	109.9	1.0	2.2		103	62
113	109.9	0.9	2.0		102	62
114	109.9	0.8	1.8		101	62
115	109.9	0.8	1.8		100	62
116	109.8	0.7	1.6		100	62
117	109.9	0.7	1.6		99	62
118	109.9	0.6	1.5		98	63
119	110.0	0.6	1.4		98	62
120	109.9	0.5	1.3		97	62
121	109.8	0.5	1.3		97	62
122	110.0	0.5	1.2		96	62
123	109.8	0.5	1.2		95	62
124	109.5	0.6	1.5		134	62
125	109.6	2.7	8.4		167	63
126	109.5	3.7	7.3		144	63
127	109.6	3.5	6.6		129	63
128	109.7	3.1	6.0		120	63
129	109.6	2.9	5.6		115	63
130	109.6	2.6	5.1		111	63
131	109.6	2.3	4.8		109	63
132	109.6	2.2	4.5		107	63
133	109.7	1.9	4.1		105	63
134	109.6	1.8	3.8		104	63
135	109.5	1.6	3.5		103	63
136	109.5	1.5	3.2		102	63
137	109.5	1.3	2.9		101	63
138	109.6	1.2	2.7		100	63
139	109.6	1.1	2.6		99	63
140	109.7	1.0	2.5		99	63
141	109.6	1.0	2.4		98	63
142	109.6	0.9	2.2		97	64
143	109.5	0.9	2.1		97	63
144	109.5	0.8	1.9		96	64
145	109.5	0.7	1.9		95	64
146	109.7	0.7	1.8		95	64
147	109.6	0.7	1.7		94	63

148	109.6	0.6	1.6		94	64
149	109.5	0.6	1.6		93	64
150	109.7	0.6	1.5		93	64
151	109.5	0.5	1.5		92	64
152	109.6	0.5	1.4		92	64
153	109.6	0.5	1.4		92	64
154	109.5	0.5	1.3		91	64
155	109.3	0.5	1.3		91	64
156	109.2	1.2	6.2		136	64
157	109.2	3.3	7.1		143	64
158	109.3	3.3	6.7		129	64
159	109.3	2.9	5.8		120	63
160	109.2	2.5	5.3		114	63
161	109.4	2.2	4.8		110	63
162	109.3	1.9	4.2		107	63
163	109.2	1.7	3.8		105	63
164	109.3	1.5	3.5		103	63
165	109.1	1.3	3.2		101	63
166	109.3	1.2	2.9		100	63
167	109.3	1.1	2.7		98	63
168	109.1	1.0	2.5		97	63
169	109.1	0.9	2.3		97	63
170	109.2	0.8	2.1		96	63
171	109.1	0.8	2.0		95	63
172	109.1	0.7	1.9		95	63
173	109.2	0.7	1.8		94	62
174	109.2	0.6	1.7		93	62
175	109.2	0.6	1.7		93	62
176	109.1	0.6	1.6		92	62
177	109.3	0.5	1.5		92	62
178	109.2	0.5	1.5		91	62
179	109.1	0.5	1.4		91	62
180	109.0	0.5	1.4		90	62
181	109.2	0.5	1.4		90	62
182	109.3	0.4	1.3		89	62
183	109.1	0.4	1.3		89	62
184	109.2	0.4	1.3		89	62
185	109.1	0.4	1.3		88	62
186	109.0	0.4	1.2		88	62
187	108.9	0.4	1.3		127	62
188	109.1	0.2	2.7		139	63
189	108.9	0.7	2.4		130	62

190	109.0	0.6	2.1		120	62
191	109.0	0.5	1.8		113	62
192	109.1	0.4	1.6		109	62
193	108.9	0.4	1.4		106	62
194	109.0	0.3	1.4		103	62
195	109.0	0.3	1.3		101	62
196	109.1	0.3	1.2		99	62
197	108.9	0.2	1.1		98	63
198	109.0	0.2	1.1		96	63
199	109.1	0.2	1.1		95	63
200	109.0	0.2	1.0		94	63
201	109.1	0.2	1.1		94	63
202	109.0	0.2	1.1		93	63
203	108.9	0.2	1.1		92	63
204	108.9	0.2	1.1		92	63
205	109.1	0.2	1.1		91	63
206	108.9	0.2	1.1		91	63
207	108.8	0.2	1.2		90	63
208	108.9	0.2	1.2		90	63
209	109.0	0.2	1.2		90	63
210	109.0	0.2	1.2		89	63
211	109.0	0.2	1.2		89	63
212	109.0	0.2	1.2		88	63
213	108.8	0.2	1.2		88	63
214	109.1	0.2	1.3		88	64
215	108.9	0.2	1.2		87	64
216	109.0	0.2	1.3		87	64
217	109.0	0.2	1.3		88	64
218	108.9	0.2	1.3		87	64
219	108.8	0.4	4.1		124	64
220	108.7	0.1	1.3		132	64
221	108.9	0.1	0.8		121	64
222	108.8	0.1	0.7		113	63
223	108.8	0.0	0.6		109	63
224	108.8	0.0	0.5		105	63
225	108.8	0.0	0.5		103	63
226	108.7	0.0	0.5		101	63
227	108.7	0.0	0.5		99	63
228	108.8	0.0	0.4		97	63
229	108.9	0.0	0.4		96	63
230	108.6	0.0	0.4		95	63
231	108.7	0.0	0.5		94	63

232	108.8	0.0	0.5		93	63
233	108.8	0.0	0.5		93	63
234	108.8	0.0	0.5		92	63
235	108.7	0.0	0.5		91	63
236	108.7	0.0	0.5		91	62
237	108.7	0.0	0.5		90	62
238	108.8	0.0	0.6		89	62
239	108.8	0.0	0.6		89	62
240	108.7	0.0	0.6		88	62
241	108.8	0.1	0.6		88	62
242	108.7	0.1	0.6		88	62
243	108.7	0.1	0.7		88	62
244	108.7	0.1	0.7		87	62
245	108.7	0.1	0.7		87	62
246	108.9	0.1	0.7		87	62
247	108.6	0.1	0.7		92	62
248	108.6	0.2	2.9		126	62
249	108.3	0.1	1.0		143	62
250	108.2	1.0	1.5		153	62
251	107.9	1.5	3.1		162	62
252	107.4	2.6	6.4		179	63
253	107.1	3.9	9.5		208	62
254	106.5	3.4	13.2		233	63
255	106.1	2.4	15.0		255	63
256	105.5	0.9	15.8		276	63
257	105.0	0.3	15.9		294	63
258	104.6	0.3	16.2		307	63
259	104.0	0.3	16.1		316	63
260	103.5	0.2	16.3		324	63
261	103.0	0.1	16.5		330	63
262	102.3	0.1	16.6		337	63
263	101.9	0.1	16.6		342	63
264	101.3	0.2	16.8		347	63
265	100.8	0.2	16.9		350	63
266	100.4	0.2	16.7		352	63
267	99.6	0.2	16.8		354	63
268	99.2	0.2	16.8		356	64
269	98.7	0.2	16.8		358	64
270	98.1	0.2	16.6		362	64
271	97.4	0.1	16.7		366	64
272	97.2	0.2	16.4		369	64
273	96.9	0.2	15.7		345	64

274	96.9	0.1	12.0		312	64
275	96.8	0.1	10.0		293	64
276	96.6	0.2	10.3		279	64
277	96.7	0.2	8.9		268	64
278	96.6	0.3	7.4		258	63
279	96.4	0.4	5.9		249	63
280	96.5	0.4	5.0		242	63
281	96.5	0.4	4.4		235	63
282	96.3	0.3	3.8		229	63
283	96.5	0.3	3.4		223	63
284	96.4	0.3	3.1		218	63
285	96.6	0.4	2.8		215	63
286	96.4	0.3	1.8		212	63
287	96.5	0.2	1.2		208	63
288	96.3	0.2	1.3		204	62
289	96.3	0.2	1.6		200	62
290	96.3	0.3	2.1		196	63
291	96.4	0.4	2.5		192	62
292	96.3	0.4	2.9		188	62
293	96.5	0.5	3.4		185	62
294	96.4	0.5	3.5		181	62
295	96.4	0.5	3.5		178	62
296	96.4	0.5	3.6		174	62
297	96.2	0.5	3.7		171	62
298	96.4	0.5	3.7		168	62
299	96.3	0.5	3.7		166	62
300	96.4	0.5	3.6		162	62
301	96.4	0.5	3.8		160	62
302	96.4	0.5	3.8		157	62
303	96.4	0.5	3.7		155	62
304	96.5	0.5	3.7		152	62
305	96.5	0.5	3.6		150	62
306	96.4	0.5	3.6		148	62
307	96.3	0.5	3.5		145	62
308	96.4	0.5	3.6		144	62
309	96.5	0.4	3.3		141	61
310	96.4	0.5	3.4		139	61
311	96.5	0.5	3.4		137	61
312	96.3	0.4	3.3		135	61
313	96.4	0.4	3.3		134	61
314	96.4	0.4	3.4		132	61
315	96.1	0.4	3.2		155	61

316	95.9	0.4	3.2		186	61
317	96.0	0.8	3.7		172	62
318	95.9	0.7	3.5		158	61
319	95.9	0.6	3.5		150	61
320	96.0	0.5	3.5		144	61
321	96.0	0.5	3.4		140	61
322	95.9	0.5	3.4		137	61
323	96.0	0.4	3.2		134	62
324	95.9	0.4	3.1		132	62
325	95.9	0.4	2.9		129	62
326	95.9	0.3	2.8		128	62
327	96.0	0.3	2.7		126	62
328	96.0	0.3	2.6		125	62
329	96.1	0.3	2.5		123	63
330	95.9	0.3	2.4		122	63
331	95.9	0.3	2.3		120	63
332	96.0	0.3	2.3		119	63
333	96.0	0.2	2.1		117	63
334	96.0	0.2	2.1		116	63
335	95.9	0.2	2.0		115	62
336	95.9	0.2	2.0		114	62
337	95.9	0.2	2.0		113	62
338	96.0	0.2	1.8		112	62
339	96.0	0.2	1.9		111	62
340	96.1	0.2	1.8		110	62
341	96.0	0.2	1.8		110	62
342	96.0	0.2	1.8		108	62
343	96.0	0.2	1.8		108	62
344	95.9	0.2	1.7		107	62
345	96.0	0.2	1.7		106	62
346	95.9	0.2	1.8		106	62
347	95.8	0.2	2.7		147	62
348	95.7	0.1	1.1		160	62
349	95.7	0.2	1.1		141	62
350	95.7	0.2	0.9		130	61
351	95.7	0.2	0.9		124	61
352	95.7	0.1	0.9		119	62
353	95.7	0.1	0.9		116	62
354	95.7	0.1	0.9		114	62
355	95.9	0.1	0.9		112	62
356	95.7	0.1	0.9		111	62
357	95.7	0.1	0.9		110	62

358	95.7	0.1	0.9		109	62
359	95.7	0.1	0.9		107	63
360	95.8	0.1	0.9		106	62
361	95.8	0.1	0.9		106	62
362	95.8	0.1	0.9		105	63
363	95.7	0.1	0.9		104	63
364	95.7	0.1	1.0		104	63
365	95.8	0.1	0.9		103	63
366	95.7	0.1	0.9		102	63
367	95.8	0.1	0.9		102	64
368	95.8	0.1	1.0		101	63
369	95.8	0.1	1.0		101	63
370	95.7	0.1	1.0		100	63
371	95.7	0.1	1.0		99	63
372	95.8	0.1	1.0		99	63
373	95.7	0.1	1.0		98	63
374	95.8	0.1	1.0		98	63
375	95.7	0.1	1.0		97	62
376	95.7	0.1	1.0		97	62
377	95.7	0.1	0.9		97	62
378	95.8	0.1	1.0		122	62
379	95.5	0.1	1.4		140	62
380	95.5	0.0	0.5		136	62
381	95.6	0.0	0.3		125	62
382	95.5	0.0	0.3		119	62
383	95.5	0.0	0.3		114	62
384	95.4	0.0	0.2		111	62
385	95.6	0.0	0.3		108	62
386	95.5	0.0	0.3		106	62
387	95.5	0.0	0.3		105	62
388	95.5	0.0	0.3		103	62
389	95.4	0.0	0.3		102	62
390	95.4	0.0	0.3		101	61
391	95.5	0.0	0.3		100	61
392	95.7	0.0	0.3		99	61
393	95.5	0.0	0.3		99	61
394	95.5	0.0	0.3		98	61
395	95.5	0.0	0.3		98	61
396	95.6	0.0	0.3		97	61
397	95.6	0.0	0.3		97	61
398	95.5	0.0	0.3		97	62
399	95.6	0.0	0.4		96	62

400	95.4	0.0	0.4		95	62
401	95.5	0.0	0.4		94	62
402	95.5	0.0	0.4		94	62
403	95.6	0.0	0.4		94	62
404	95.5	0.0	0.4		94	62
405	95.5	0.0	0.4		93	62
406	95.6	0.0	0.4		93	62
407	95.6	0.0	0.4		93	62
408	95.5	0.0	0.4		93	63
409	95.5	0.0	0.4		92	63
410	95.5	0.1	0.7		129	63
411	95.4	0.0	0.6		134	63
412	95.4	0.0	0.3		123	63
413	95.4	0.0	0.3		116	63
414	95.4	0.0	0.2		112	63
415	95.4	0.0	0.2		109	63
416	95.4	0.0	0.2		106	63
417	95.5	0.0	0.2		104	63
418	95.4	0.0	0.2		102	63
419	95.4	0.0	0.2		100	63
420	95.4	0.0	0.2		100	63
421	95.4	0.0	0.2		98	63
422	95.3	0.0	0.2		97	63
423	95.4	0.0	0.2		97	63
424	95.3	0.0	0.2		96	63
425	95.3	0.0	0.2		95	63
426	95.4	0.0	0.2		94	63
427	95.4	0.0	0.2		94	63
428	95.3	0.0	0.2		94	63
429	95.2	0.0	0.2		93	63
430	95.5	0.0	0.2		93	63
431	95.3	0.0	0.2		92	63
432	95.2	0.0	0.2		92	63
433	95.3	0.0	0.2		92	62
434	95.2	0.0	0.2		91	62
435	95.3	0.0	0.2		91	62
436	95.4	0.0	0.2		91	62
437	95.3	0.0	0.2		90	62
438	95.3	0.0	0.3		89	62
439	95.3	0.0	0.3		90	62
440	95.2	0.0	0.3		89	62
441	95.2	0.0	0.3		91	62

442	95.2	0.1	0.9		122	62
443	95.2	0.0	0.3		123	62
444	95.2	0.0	0.2		115	62
445	95.2	0.0	0.2		110	62
446	95.3	0.0	0.2		106	62
447	95.1	0.0	0.2		104	61
448	95.2	0.0	0.2		101	61
449	95.3	0.0	0.1		99	61
450	95.3	0.0	0.1		98	61
451	95.2	0.0	0.1		97	63
452	95.3	0.0	0.2		96	61
453	95.2	0.0	0.1		95	61
454	95.2	0.0	0.1		94	61
455	95.2	0.0	0.1		93	61
456	95.1	0.0	0.2		92	61
457	95.1	0.0	0.2		91	62
458	95.3	0.0	0.2		90	62
459	95.1	0.0	0.2		91	62
460	95.3	0.0	0.2		90	62
461	95.1	0.0	0.2		90	62
462	95.2	0.0	0.2		89	62
463	95.2	0.0	0.2		89	62
464	95.1	0.0	0.2		88	62
465	95.2	0.0	0.2		88	62
466	95.1	0.0	0.2		88	62
467	95.3	0.0	0.2		87	62
468	95.2	0.0	0.2		87	63
469	95.1	0.0	0.2		87	63
470	95.2	0.0	0.2		86	63
471	95.2	0.0	0.2		85	63
472	95.2	0.0	0.2		85	63
473	95.1	0.0	0.2		119	63
474	95.2	0.0	0.4		126	63
475	95.1	0.0	0.2		116	63
476	95.1	0.0	0.2		109	63
477	94.8	0.0	0.2		105	63
478	95.1	0.0	0.1		102	63
479	95.1	0.0	0.1		99	63
480	95.1	0.0	0.1		97	63
481	94.9	0.0	0.1		96	63
482	95.0	0.0	0.1		95	63
483	95.1	0.0	0.1		93	63

484	94.9	0.0	0.1		93	63
485	95.1	0.0	0.1		111	63
486	95.1	0.0	0.3		129	63
487	94.9	0.0	0.1		140	63
488	94.9	0.0	0.1		144	63
489	94.8	0.0	0.1		146	63
490	94.9	0.0	0.1		148	63
491	94.8	0.0	0.1		149	63
492	94.6	0.0	0.2		150	63
493	94.7	0.1	0.4		152	63
494	94.8	0.3	0.8		154	63
495	94.6	0.5	1.2		158	63
496	94.3	0.1	0.3		163	62
497	94.1	0.0	0.1		167	62
498	94.1	1.9	5.0		177	62
499	93.7	2.7	7.0		188	62
500	93.5	1.9	6.5		201	62
501	93.2	1.9	7.3		213	62
502	92.8	1.8	8.5		223	62
503	92.4	1.9	10.1		235	62
504	92.1	1.6	11.1		247	62
505	91.5	1.4	12.2		261	62
506	91.3	1.2	12.9		274	62
507	90.8	0.8	14.0		287	63
508	90.2	0.5	14.7		300	61
509	89.9	0.4	15.1		308	61
510	89.3	0.2	15.4		316	61
511	88.7	0.2	15.8		323	62
512	88.3	0.1	15.8		329	62
513	87.7	0.1	16.2		334	62
514	87.0	0.1	16.3		339	62
515	86.6	0.1	16.1		343	62
516	86.1	0.1	15.8		344	62
517	85.7	0.1	16.0		345	62
518	85.0	0.1	15.7		345	62
519	84.4	0.1	15.7		346	62
520	83.9	0.1	15.6		348	62
521	83.5	0.1	15.5		350	63
522	83.0	0.1	15.2		351	63
523	82.6	0.1	15.2		352	63
524	82.0	0.1	15.2		353	63
525	81.8	0.1	14.7		332	63

526	81.5	0.1	13.0		304	64
527	81.5	0.2	11.4		286	63
528	81.4	0.4	12.1		273	63
529	81.5	0.4	10.0		262	63
530	81.2	0.5	7.9		253	63
531	81.1	0.6	5.7		245	63
532	81.0	0.6	4.5		238	63
533	81.2	0.5	3.7		232	63
534	81.1	0.4	3.0		226	63
535	81.2	0.5	2.4		221	62
536	81.1	0.5	2.2		216	62
537	80.9	0.4	2.1		213	62
538	81.0	0.3	1.4		209	62
539	81.1	0.2	1.0		205	62
540	81.0	0.2	1.0		202	62
541	81.0	0.2	1.3		198	62
542	81.1	0.3	1.6		194	62
543	81.0	0.4	1.9		190	62
544	81.0	0.4	2.2		186	62
545	81.1	0.4	2.3		183	62
546	81.0	0.4	2.4		179	62
547	81.1	0.4	2.6		175	61
548	81.0	0.4	2.7		172	61
549	81.1	0.4	2.6		170	61
550	81.1	0.4	2.6		167	61
551	81.1	0.4	2.6		164	61
552	81.1	0.4	2.6		161	61
553	81.2	0.4	2.6		158	61
554	81.1	0.4	2.5		155	61
555	81.1	0.4	2.6		153	61
556	81.0	0.4	2.4		150	61
557	81.1	0.4	2.5		148	62
558	81.1	0.4	2.5		146	62
559	81.2	0.4	2.4		144	62
560	81.0	0.4	2.4		142	62
561	81.2	0.4	2.3		140	62
562	81.0	0.4	2.3		138	62
563	81.2	0.4	2.3		136	62
564	81.3	0.3	2.3		135	63
565	81.2	0.3	2.1		133	63
566	81.0	0.3	2.2		131	63
567	80.9	0.3	2.2		154	63

568	80.7	0.3	2.2		182	63
569	80.8	0.3	1.8		170	63
570	80.7	0.3	1.7		157	63
571	80.8	0.3	1.8		148	63
572	80.7	0.3	1.9		143	63
573	80.7	0.2	1.9		139	63
574	80.6	0.2	1.9		136	63
575	80.7	0.2	1.8		133	63
576	80.8	0.2	1.7		131	63
577	80.6	0.2	1.7		129	63
578	80.9	0.2	1.6		127	63
579	80.7	0.2	1.6		126	63
580	80.7	0.2	1.5		124	63
581	80.7	0.2	1.5		123	63
582	80.7	0.2	1.4		122	64
583	80.7	0.2	1.4		120	64
584	80.7	0.2	1.3		119	63
585	80.8	0.1	1.3		118	63
586	80.7	0.1	1.3		117	63
587	80.7	0.1	1.3		116	63
588	80.7	0.1	1.3		115	63
589	80.7	0.1	1.3		114	63
590	80.7	0.1	1.3		113	63
591	80.7	0.1	1.3		112	63
592	80.6	0.1	1.3		112	63
593	80.6	0.1	1.2		111	62
594	80.7	0.1	1.2		111	62
595	80.7	0.1	1.1		110	62
596	80.6	0.1	1.1		109	62
597	80.7	0.1	1.1		108	62
598	80.5	0.1	1.1		108	62
599	80.3	0.2	1.9		145	62
600	80.6	0.0	0.5		158	62
601	80.5	0.0	0.4		140	62
602	80.5	0.0	0.4		130	62
603	80.5	0.0	0.4		123	61
604	80.4	0.0	0.4		119	62
605	80.2	0.0	0.4		116	61
606	80.5	0.0	0.4		114	61
607	80.5	0.0	0.4		112	61
608	80.4	0.0	0.4		111	61
609	80.5	0.0	0.4		109	61

610	80.4	0.0	0.4		108	61
611	80.5	0.0	0.4		108	62
612	80.5	0.0	0.4		107	62
613	80.6	0.0	0.4		106	62
614	80.4	0.0	0.4		105	62
615	80.4	0.0	0.4		104	62
616	80.4	0.0	0.5		103	62
617	80.5	0.0	0.5		103	62
618	80.4	0.0	0.5		102	62
619	80.5	0.0	0.5		101	62
620	80.3	0.0	0.5		101	62
621	80.3	0.0	0.5		101	63
622	80.4	0.0	0.5		100	63
623	80.3	0.0	0.5		99	63
624	80.3	0.0	0.5		98	63
625	80.4	0.0	0.5		98	63
626	80.5	0.0	0.5		98	63
627	80.4	0.0	0.5		98	63
628	80.4	0.0	0.5		96	63
629	80.5	0.0	0.5		97	63
630	80.5	0.1	0.5		120	63
631	80.3	0.1	0.9		138	63
632	80.3	0.0	0.4		135	63
633	80.3	0.0	0.3		125	63
634	80.3	0.0	0.2		118	63
635	80.3	0.0	0.2		113	63
636	80.3	0.0	0.2		111	63
637	80.2	0.0	0.2		108	63
638	80.3	0.0	0.2		106	63
639	80.3	0.0	0.2		104	63
640	80.4	0.0	0.2		103	63
641	80.3	0.0	0.2		101	63
642	80.1	0.0	0.2		101	63
643	80.3	0.0	0.2		100	63
644	80.3	0.0	0.2		99	63
645	80.2	0.0	0.2		98	63
646	80.2	0.0	0.2		98	63
647	80.3	0.0	0.3		97	63
648	80.2	0.0	0.3		97	62
649	80.3	0.0	0.3		97	62
650	80.2	0.0	0.3		96	62
651	80.3	0.0	0.3		95	62

652	80.2	0.0	0.3		95	62
653	80.3	0.0	0.3		94	62
654	80.3	0.0	0.3		94	62
655	80.2	0.0	0.3		94	62
656	80.3	0.0	0.3		93	62
657	80.5	0.0	0.3		93	61
658	80.3	0.0	0.3		92	61
659	80.2	0.0	0.3		92	61
660	80.1	0.0	0.3		91	61
661	80.3	0.0	0.3		91	61
662	80.2	0.1	0.6		126	62
663	80.1	0.0	0.4		136	62
664	80.2	0.0	0.3		123	62
665	80.2	0.0	0.2		116	62
666	80.2	0.0	0.2		110	62
667	80.1	0.0	0.2		107	62
668	80.2	0.0	0.2		104	62
669	80.1	0.0	0.2		102	63
670	80.1	0.0	0.2		100	63
671	80.0	0.0	0.2		99	63
672	80.2	0.0	0.2		97	63
673	80.1	0.0	0.2		96	63
674	80.1	0.0	0.2		95	63
675	80.2	0.0	0.2		95	62
676	80.2	0.0	0.2		94	62
677	80.1	0.0	0.2		93	62
678	80.2	0.0	0.2		92	62
679	80.0	0.0	0.2		92	62
680	80.0	0.0	0.2		92	62
681	80.2	0.0	0.2		91	62
682	80.1	0.0	0.2		91	62
683	80.1	0.0	0.2		90	62
684	80.0	0.0	0.2		90	62
685	80.2	0.0	0.2		90	61
686	80.1	0.0	0.2		89	61
687	80.1	0.0	0.2		89	61
688	80.2	0.0	0.2		88	61
689	80.2	0.0	0.2		88	61
690	80.0	0.0	0.2		87	61
691	80.1	0.0	0.2		88	61
692	80.1	0.0	0.2		87	61
693	80.0	0.0	0.2		89	61

694	80.0	0.1	0.7		123	62
695	80.0	0.0	0.3		125	62
696	80.1	0.0	0.2		115	62
697	80.1	0.0	0.2		109	62
698	80.1	0.0	0.2		104	62
699	80.0	0.0	0.2		101	62
700	80.0	0.0	0.2		99	62
701	80.1	0.0	0.1		97	62
702	79.9	0.0	0.1		96	62
703	79.9	0.0	0.1		94	63
704	80.0	0.0	0.1		94	62
705	80.0	0.0	0.1		93	63
706	80.0	0.0	0.1		92	62
707	79.9	0.0	0.1		91	63
708	80.0	0.0	0.1		90	63
709	80.0	0.0	0.1		90	63
710	80.1	0.0	0.1		89	63
711	80.0	0.0	0.2		89	63
712	80.1	0.0	0.2		88	63
713	80.2	0.0	0.2		88	63
714	80.0	0.0	0.2		88	63
715	79.9	0.0	0.2		87	62
716	80.1	0.0	0.2		87	62
717	80.1	0.0	0.2		87	62
718	79.9	0.0	0.2		86	62
719	79.9	0.0	0.2		86	62
720	79.9	0.0	0.2		85	62
721	79.9	0.0	0.2		85	62
722	80.1	0.0	0.2		85	62
723	80.0	0.0	0.2		84	62
724	79.9	0.0	0.2		84	62
725	79.9	0.0	0.2		116	62
726	80.0	0.0	0.4		128	61
727	79.8	0.0	0.3		139	61
728	79.8	0.1	0.4		144	61
729	79.9	0.2	0.6		134	61
730	79.7	0.2	0.6		119	61
731	79.8	0.2	0.5		111	61
732	79.8	0.2	0.5		105	61
733	79.8	0.2	0.4		101	61
734	79.8	0.1	0.4		99	61
735	79.8	0.1	0.4		98	62

736	79.7	0.1	0.4		96	62
737	79.7	0.1	0.3		95	62
738	79.6	0.1	0.3		94	62
739	79.8	0.1	0.3		93	62
740	79.7	0.1	0.3		92	62
741	79.6	0.2	1.2		120	62
742	79.6	0.4	1.4		141	62
743	79.5	0.5	1.5		152	62
744	79.3	0.9	2.3		160	63
745	79.1	1.3	3.7		168	62
746	79.0	1.5	5.5		176	62
747	78.7	1.9	7.5		189	63
748	78.5	1.4	6.9		201	63
749	78.2	1.3	7.6		211	63
750	78.0	1.3	8.0		220	63
751	77.6	1.1	8.5		229	63
752	77.2	1.1	9.1		237	62
753	77.0	1.1	10.1		247	62
754	76.6	0.9	11.2		257	62
755	76.2	0.6	12.6		270	62
756	75.7	0.5	12.8		280	62
757	75.4	0.4	13.1		289	62
758	74.9	0.2	13.5		297	62
759	74.4	0.1	13.9		305	62
760	73.8	0.1	14.4		312	62
761	73.6	0.1	14.9		318	62
762	73.0	0.1	15.1		323	62
763	72.3	0.1	15.1		324	62
764	72.0	0.1	15.2		325	62
765	71.5	0.1	15.1		327	61
766	70.9	0.1	14.9		328	61
767	70.5	0.1	14.9		330	61
768	70.3	0.1	14.8		331	61
769	69.5	0.1	14.8		334	61
770	69.3	0.1	14.8		336	61
771	68.8	0.1	14.8		338	61
772	68.3	0.1	15.1		339	62
773	67.8	0.1	15.0		340	62
774	67.7	0.1	12.8		315	62
775	67.3	0.3	14.4		291	62
776	67.2	0.3	12.7		275	62
777	67.2	0.8	15.0		263	62

778	67.0	0.3	12.9		254	62
779	66.8	0.3	10.8		245	62
780	66.8	0.4	8.5		238	62
781	66.9	0.6	7.0		231	62
782	66.9	0.7	5.2		225	63
783	66.9	0.7	4.1		220	63
784	66.7	0.8	3.2		215	63
785	66.7	0.7	3.0		211	63
786	66.5	0.6	2.5		208	63
787	66.7	0.4	1.7		204	63
788	66.6	0.4	1.7		200	62
789	66.7	0.5	2.3		196	63
790	66.7	0.6	2.8		192	63
791	66.8	0.7	3.3		188	63
792	66.6	0.7	3.4		185	64
793	66.8	0.8	3.6		181	63
794	66.8	0.8	3.8		178	63
795	66.7	0.8	3.8		175	63
796	66.5	0.8	3.7		171	63
797	66.7	0.8	3.8		168	63
798	66.6	0.8	3.8		166	63
799	66.7	0.8	3.8		163	63
800	66.6	0.8	3.9		160	62
801	66.8	0.8	3.8		158	62
802	66.7	0.8	3.8		155	62
803	66.7	0.7	3.7		153	62
804	66.7	0.7	3.6		151	62
805	66.7	0.7	3.6		148	62
806	66.7	0.7	3.6		146	62
807	66.7	0.7	3.5		145	62
808	66.8	0.7	3.6		143	61
809	66.7	0.6	3.4		140	62
810	66.7	0.7	3.5		138	62
811	66.6	0.6	3.4		137	61
812	66.7	0.6	3.5		135	61
813	66.7	0.6	3.3		134	61
814	66.6	0.6	3.3		132	61
815	66.5	0.6	3.2		130	61
816	66.4	0.7	4.1		157	61
817	66.3	0.5	2.5		185	61
818	66.3	0.6	2.4		166	61
819	66.4	0.5	2.1		154	61

820	66.4	0.4	2.0		146	61
821	66.2	0.4	1.9		141	61
822	66.3	0.3	2.0		137	61
823	66.3	0.3	1.9		134	61
824	66.3	0.3	2.0		132	62
825	66.2	0.3	2.0		130	62
826	66.3	0.3	1.9		128	62
827	66.2	0.3	1.9		126	62
828	66.1	0.3	1.9		125	62
829	66.4	0.2	1.9		123	63
830	66.2	0.2	1.8		122	62
831	66.2	0.2	1.7		121	62
832	66.3	0.2	1.7		119	62
833	66.2	0.2	1.7		118	62
834	66.3	0.2	1.7		117	62
835	66.4	0.2	1.7		116	62
836	66.3	0.2	1.6		115	62
837	66.3	0.2	1.6		115	62
838	66.2	0.2	1.6		113	62
839	66.1	0.2	1.5		112	62
840	66.3	0.2	1.6		111	61
841	66.1	0.2	1.5		111	61
842	66.3	0.2	1.5		110	61
843	66.4	0.2	1.5		109	61
844	66.4	0.2	1.5		109	61
845	66.3	0.2	1.5		108	61
846	66.3	0.2	1.4		107	61
847	66.3	0.2	1.4		106	61
848	66.2	0.2	1.7		144	61
849	66.1	0.1	0.9		148	61
850	66.1	0.1	0.7		134	61
851	66.0	0.1	0.6		126	61
852	66.2	0.1	0.6		120	61
853	66.1	0.1	0.5		116	62
854	66.1	0.1	0.5		113	62
855	66.1	0.1	0.6		112	62
856	66.1	0.1	0.6		110	62
857	66.0	0.1	0.6		108	62
858	66.1	0.1	0.6		107	62
859	66.1	0.1	0.6		106	62
860	66.0	0.1	0.7		105	62
861	66.0	0.1	0.7		104	62

862	66.1	0.1	0.7		104	63
863	66.0	0.1	0.7		103	63
864	65.9	0.1	0.6		102	62
865	66.2	0.1	0.7		102	62
866	65.9	0.1	0.7		101	62
867	66.0	0.1	0.7		100	62
868	66.0	0.1	0.7		100	62
869	66.1	0.1	0.7		100	62
870	66.0	0.1	0.7		99	62
871	66.0	0.1	0.7		98	63
872	66.1	0.1	0.7		98	63
873	66.1	0.1	0.7		97	63
874	66.1	0.1	0.7		97	63
875	66.1	0.1	0.7		96	63
876	66.0	0.1	0.7		96	63
877	66.2	0.1	0.7		95	63
878	66.0	0.1	0.7		95	63
879	66.1	0.1	0.7		132	63
880	66.2	0.1	1.1		135	63
881	65.9	0.0	0.4		128	63
882	66.0	0.0	0.3		120	63
883	65.9	0.0	0.3		115	63
884	66.0	0.0	0.3		111	63
885	66.1	0.0	0.2		108	62
886	66.0	0.0	0.2		106	62
887	65.9	0.0	0.2		103	62
888	65.9	0.0	0.2		102	62
889	65.9	0.0	0.3		100	62
890	65.9	0.0	0.3		99	62
891	65.9	0.0	0.3		98	62
892	65.9	0.0	0.3		98	62
893	65.9	0.0	0.3		97	62
894	65.8	0.0	0.3		96	61
895	66.0	0.0	0.3		95	61
896	65.9	0.0	0.3		95	61
897	65.9	0.0	0.3		95	61
898	66.0	0.0	0.3		94	61
899	66.0	0.0	0.3		94	61
900	66.0	0.0	0.3		93	61
901	65.8	0.0	0.3		93	61
902	65.8	0.0	0.3		93	62
903	65.9	0.0	0.3		92	62

904	65.9	0.0	0.3		91	62
905	66.0	0.0	0.3		91	62
906	65.9	0.0	0.3		91	62
907	65.9	0.0	0.3		90	62
908	66.0	0.0	0.3		90	62
909	66.0	0.0	0.3		89	62
910	65.9	0.0	0.3		89	63
911	65.9	0.1	1.2		122	62
912	66.0	0.0	0.3		129	62
913	65.8	0.0	0.2		118	63
914	65.8	0.0	0.2		111	63
915	65.8	0.0	0.2		107	63
916	65.9	0.0	0.2		103	62
917	65.7	0.0	0.2		101	62
918	65.7	0.0	0.2		99	62
919	65.7	0.0	0.2		97	63
920	65.8	0.0	0.2		96	63
921	65.7	0.0	0.2		95	63
922	65.8	0.0	0.2		94	63
923	65.8	0.0	0.2		93	63
924	65.8	0.0	0.2		92	63
925	65.8	0.0	0.2		92	63
926	65.7	0.0	0.2		91	63
927	65.6	0.0	0.2		90	63
928	65.8	0.0	0.2		89	63
929	65.7	0.0	0.2		89	63
930	65.8	0.0	0.2		89	63
931	65.6	0.0	0.2		89	63
932	65.8	0.0	0.2		88	63
933	65.8	0.0	0.2		88	63
934	65.8	0.0	0.2		87	63
935	65.8	0.0	0.2		87	63
936	65.6	0.1	0.7		120	63
937	65.7	0.0	0.2		138	63
938	65.7	0.0	0.1		146	63
939	65.6	0.0	0.1		149	63
940	65.6	0.0	0.1		151	63
941	65.7	0.0	0.1		153	63
942	65.5	0.0	0.2		154	63
943	65.5	0.1	0.3		155	64
944	65.4	0.2	0.7		156	63
945	65.3	0.5	1.5		159	64

946	65.0	1.1	2.9		165	63
947	64.8	1.7	5.2		175	64
948	64.6	2.2	7.2		185	64
949	64.4	1.7	6.9		199	64
950	64.0	1.7	7.6		210	64
951	63.6	1.6	8.4		220	64
952	63.4	1.6	9.2		229	63
953	63.0	1.6	10.1		239	64
954	62.5	1.7	10.9		249	64
955	62.0	0.7	13.6		261	64
956	61.7	0.4	14.6		271	64
957	61.3	0.3	15.0		279	64
958	60.6	0.2	15.1		287	64
959	60.3	0.2	15.0		294	64
960	59.8	0.2	14.9		299	64
961	59.2	0.1	15.7		306	64
962	58.7	0.1	16.1		312	64
963	58.1	0.1	16.0		316	64
964	57.9	0.1	15.9		320	64
965	57.4	0.1	15.9		323	64
966	56.7	0.1	16.0		327	64
967	56.2	0.1	16.1		331	64
968	55.5	0.1	16.0		334	64
969	55.3	0.1	15.9		337	64
970	54.6	0.1	16.4		342	64
971	53.8	0.1	16.5		345	64
972	53.5	0.1	15.9		346	64
973	52.9	0.1	15.7		347	64
974	52.4	0.1	15.5		349	65
975	52.3	0.1	12.6		317	66
976	52.0	0.5	16.1		294	65
977	51.9	0.6	14.0		279	64
978	51.6	0.8	15.8		267	65
979	51.7	0.4	13.7		257	64
980	51.6	0.4	11.5		248	64
981	51.5	0.5	9.5		241	64
982	51.5	0.6	7.3		234	64
983	51.6	0.7	5.3		228	64
984	51.4	0.7	3.8		223	64
985	51.4	0.7	2.9		218	64
986	51.3	0.7	2.7		214	64
987	51.4	0.6	2.2		211	64

988	51.3	0.4	1.5		207	64
989	51.4	0.4	1.7		203	64
990	51.4	0.7	2.4		200	64
991	51.3	1.0	3.4		196	64
992	51.4	1.2	4.2		192	64
993	51.3	1.3	4.6		188	64
994	51.3	1.5	5.2		185	64
995	51.3	1.5	5.2		181	64
996	51.2	1.6	5.8		178	64
997	51.2	1.7	5.9		175	65
998	51.2	1.7	6.2		172	65
999	51.2	1.7	6.0		169	65
1000	51.2	1.6	5.8		166	65
1001	51.2	1.7	6.1		164	64
1002	51.2	1.6	5.9		161	65
1003	51.2	1.6	6.0		159	65
1004	51.3	1.6	6.0		157	64
1005	51.2	1.5	5.8		154	64
1006	51.3	1.6	5.9		152	65
1007	51.3	1.6	6.1		150	64
1008	51.5	1.6	6.0		148	64
1009	51.2	1.5	5.9		146	64
1010	51.2	1.5	5.8		145	65
1011	51.2	1.5	5.9		143	64
1012	51.2	1.5	5.8		141	65
1013	51.2	1.4	5.7		141	65
1014	51.2	1.4	5.7		138	64
1015	51.3	1.4	5.6		137	64
1016	51.1	1.3	5.4		136	64
1017	50.9	1.7	7.1		163	65
1018	50.8	0.5	2.6		181	65
1019	51.0	0.5	2.5		163	65
1020	50.8	0.4	2.4		153	65
1021	50.6	0.4	2.3		146	65
1022	50.8	0.4	2.3		141	65
1023	50.8	0.3	2.2		138	65
1024	50.8	0.3	2.3		135	65
1025	50.8	0.3	2.3		133	65
1026	50.9	0.3	2.3		131	65
1027	50.9	0.3	2.3		129	65
1028	50.8	0.3	2.3		129	65
1029	50.8	0.3	2.3		127	65

1030	50.7	0.3	2.3		126	65
1031	50.8	0.3	2.4		125	65
1032	50.8	0.3	2.3		124	65
1033	50.8	0.3	2.3		123	65
1034	50.7	0.3	2.3		121	66
1035	50.9	0.3	2.2		121	66
1036	50.8	0.3	2.2		120	66
1037	50.8	0.3	2.1		119	65
1038	50.8	0.3	2.2		119	65
1039	50.8	0.3	2.2		118	65
1040	50.8	0.2	2.1		117	65
1041	50.7	0.2	2.1		116	65
1042	50.8	0.2	2.1		116	65
1043	50.8	0.2	2.1		115	65
1044	50.8	0.2	2.2		115	65
1045	50.7	0.2	2.1		114	66
1046	50.8	0.2	2.1		115	65
1047	50.8	0.2	2.1		112	65
1048	50.8	0.2	2.1		131	65
1049	50.6	0.1	1.0		151	65
1050	50.6	0.0	0.5		148	65
1051	50.6	0.0	0.4		134	66
1052	50.6	0.0	0.4		125	66
1053	50.6	0.0	0.3		120	66
1054	50.6	0.0	0.3		117	66
1055	50.6	0.0	0.4		114	66
1056	50.5	0.0	0.4		112	65
1057	50.5	0.0	0.5		111	65
1058	50.5	0.1	0.5		110	65
1059	50.6	0.1	0.6		109	66
1060	50.5	0.1	0.6		108	66
1061	50.5	0.1	0.7		108	66
1062	50.5	0.1	0.7		107	66
1063	50.5	0.1	0.8		106	66
1064	50.6	0.1	0.8		106	66
1065	50.5	0.1	0.9		105	66
1066	50.6	0.1	0.9		104	66
1067	50.5	0.1	1.0		104	66
1068	50.6	0.1	1.0		103	66
1069	50.5	0.1	1.0		103	66
1070	50.7	0.1	1.0		102	66
1071	50.5	0.1	1.1		102	66

1072	50.4	0.1	1.1		101	66
1073	50.6	0.1	1.1		101	66
1074	50.6	0.1	1.1		100	66
1075	50.6	0.1	1.2		100	66
1076	50.4	0.1	1.2		100	66
1077	50.5	0.1	1.3		99	66
1078	50.6	0.1	1.3		100	66
1079	50.5	0.1	1.3		100	66
1080	50.3	0.3	2.6		132	66
1081	50.4	0.1	0.7		142	66
1082	50.5	0.0	0.4		129	66
1083	50.5	0.0	0.4		120	66
1084	50.4	0.0	0.3		114	66
1085	50.4	0.0	0.3		111	66
1086	50.4	0.0	0.3		108	66
1087	50.3	0.0	0.3		106	66
1088	50.3	0.0	0.3		104	66
1089	50.4	0.0	0.3		103	66
1090	50.3	0.0	0.3		101	66
1091	50.5	0.0	0.3		100	66
1092	50.5	0.0	0.3		100	66
1093	50.5	0.0	0.3		99	66
1094	50.4	0.0	0.3		99	66
1095	50.4	0.0	0.3		98	66
1096	50.2	0.0	0.4		97	66
1097	50.3	0.0	0.4		97	66
1098	50.4	0.0	0.4		96	66
1099	50.4	0.0	0.4		96	66
1100	50.4	0.0	0.4		96	66
1101	50.4	0.0	0.4		95	66
1102	50.4	0.0	0.4		94	66
1103	50.3	0.0	0.5		94	66
1104	50.3	0.0	0.5		94	66
1105	50.4	0.1	0.5		93	66
1106	50.3	0.1	0.6		93	67
1107	50.4	0.1	0.6		93	66
1108	50.4	0.1	0.6		93	66
1109	50.3	0.1	0.6		93	66
1110	50.3	0.1	0.6		93	66
1111	50.3	0.1	0.7		92	66
1112	50.4	0.1	1.3		124	66
1113	50.3	0.0	0.4		129	67

1114	50.4	0.0	0.4		118	67
1115	50.3	0.0	0.3		112	67
1116	50.2	0.0	0.3		107	66
1117	50.3	0.0	0.3		104	67
1118	50.3	0.0	0.2		101	67
1119	50.2	0.0	0.2		100	66
1120	50.2	0.0	0.2		98	67
1121	50.2	0.0	0.2		97	67
1122	50.2	0.0	0.2		96	67
1123	50.3	0.0	0.2		95	67
1124	50.4	0.0	0.2		94	67
1125	50.2	0.0	0.2		94	67
1126	50.3	0.0	0.3		93	67
1127	50.2	0.0	0.3		93	67
1128	50.4	0.0	0.3		92	67
1129	50.2	0.0	0.3		92	67
1130	50.2	0.0	0.3		91	67
1131	50.2	0.0	0.3		91	67
1132	50.2	0.0	0.3		91	67
1133	50.3	0.0	0.4		91	67
1134	50.2	0.0	0.4		90	67
1135	50.2	0.0	0.4		90	67
1136	50.4	0.0	0.4		90	67
1137	50.2	0.0	0.4		89	67
1138	50.2	0.0	0.4		89	67
1139	50.1	0.0	0.4		89	67
1140	50.3	0.0	0.5		89	67
1141	50.3	0.0	0.5		89	67
1142	50.2	0.0	0.5		88	67
1143	50.3	0.1	0.8		116	67
1144	50.2	0.1	0.7		130	67
1145	50.2	0.0	0.4		120	67
1146	50.0	0.0	0.4		111	67
1147	50.2	0.0	0.3		105	67
1148	50.1	0.0	0.3		101	67
1149	50.2	0.0	0.3		99	67
1150	50.0	0.0	0.3		97	67
1151	50.1	0.0	0.3		95	67
1152	49.9	0.2	1.4		125	67
1153	49.7	0.5	1.4		143	67
1154	49.7	1.1	2.7		155	67
1155	49.4	1.8	4.8		167	67

1156	49.4	2.3	6.9		178	67
1157	48.9	1.9	6.6		192	67
1158	48.8	1.9	7.5		205	67
1159	48.5	2.0	8.0		215	67
1160	48.1	1.7	8.5		224	67
1161	47.9	1.6	9.2		233	67
1162	47.6	1.4	10.1		242	67
1163	47.1	1.2	10.9		251	67
1164	46.9	1.2	11.5		259	67
1165	46.6	1.1	11.7		268	67
1166	46.1	1.0	12.0		275	67
1167	45.7	0.9	12.3		282	67
1168	45.3	0.8	12.7		289	67
1169	45.1	0.5	13.2		296	67
1170	44.5	0.4	13.3		302	67
1171	44.2	0.3	13.6		308	67
1172	43.6	0.2	14.3		313	67
1173	43.2	0.3	14.3		318	67
1174	42.8	0.3	14.2		322	67
1175	42.3	0.4	14.1		326	67
1176	42.0	0.4	14.1		328	67
1177	41.3	0.3	14.1		331	67
1178	40.9	0.3	14.0		333	67
1179	40.6	0.3	13.9		337	67
1180	40.2	0.4	13.7		339	67
1181	39.9	0.4	13.2		340	67
1182	39.5	0.1	10.8		307	67
1183	39.4	0.2	12.5		285	67
1184	39.4	0.5	12.3		271	67
1185	39.2	0.3	12.9		260	67
1186	39.2	0.3	10.9		250	67
1187	39.1	0.3	9.0		242	67
1188	39.1	0.5	7.4		235	67
1189	39.1	0.6	5.9		229	68
1190	39.1	0.6	4.6		224	67
1191	39.0	0.6	3.5		219	68
1192	38.9	0.6	2.6		214	67
1193	39.0	0.5	2.2		210	68
1194	38.8	0.4	1.7		206	67
1195	39.0	0.2	1.1		203	68
1196	38.9	0.2	1.1		198	67
1197	38.9	0.3	1.3		195	67

1198	38.9	0.4	1.7		192	68
1199	38.9	0.5	1.9		188	68
1200	39.0	0.5	2.2		184	68
1201	39.0	0.6	2.5		180	68
1202	38.9	0.7	2.7		177	68
1203	38.9	0.6	2.5		174	68
1204	39.0	0.6	2.6		171	68
1205	39.0	0.6	2.6		168	68
1206	39.1	0.7	2.8		165	68
1207	38.9	0.6	2.6		163	68
1208	38.9	0.6	2.7		160	68
1209	39.0	0.6	2.5		158	68
1210	38.9	0.6	2.6		156	68
1211	38.9	0.6	2.6		153	68
1212	39.0	0.6	2.6		151	68
1213	38.8	0.6	2.6		149	68
1214	38.9	0.6	2.5		147	68
1215	38.9	0.6	2.5		145	68
1216	38.9	0.6	2.5		143	68
1217	38.9	0.6	2.4		142	68
1218	38.8	0.6	2.5		140	68
1219	39.0	0.6	2.4		138	68
1220	39.0	0.1	0.6		136	68
1221	38.9	0.6	2.4		135	68
1222	38.9	0.5	2.3		134	68
1223	38.8	0.5	2.3		132	68
1224	38.6	1.1	4.7		167	68
1225	38.6	0.3	1.7		180	68
1226	38.7	0.4	1.6		163	68
1227	38.5	0.3	1.6		153	68
1228	38.6	0.3	1.5		146	68
1229	38.6	0.3	1.5		142	68
1230	38.6	0.3	1.6		138	68
1231	38.7	0.2	1.5		136	68
1232	38.5	0.2	1.5		133	68
1233	38.5	0.2	1.4		131	68
1234	38.6	0.2	1.4		130	68
1235	38.5	0.2	1.3		128	68
1236	38.6	0.2	1.3		127	68
1237	38.7	0.2	1.3		125	68
1238	38.6	0.2	1.3		124	68
1239	38.6	0.2	1.2		123	68

1240	38.5	0.2	1.2		122	68
1241	38.6	0.2	1.1		121	68
1242	38.5	0.2	1.1		119	68
1243	38.6	0.2	1.1		119	68
1244	38.6	0.1	1.0		117	68
1245	38.5	0.1	1.0		116	68
1246	38.5	0.1	1.0		115	68
1247	38.6	0.1	1.0		114	68
1248	38.6	0.1	1.0		113	68
1249	38.6	0.1	0.9		112	68
1250	38.5	0.1	0.9		112	68
1251	38.7	0.1	0.9		111	68
1252	38.6	0.1	0.9		110	68
1253	38.6	0.1	0.9		110	68
1254	38.5	0.1	0.9		109	68
1255	38.5	0.1	0.8		120	68
1256	38.6	0.1	1.1		149	68
1257	38.4	0.0	0.4		144	68
1258	38.5	0.0	0.3		132	68
1259	38.5	0.0	0.3		125	68
1260	38.5	0.0	0.3		120	68
1261	38.5	0.0	0.3		117	68
1262	38.5	0.0	0.3		114	68
1263	38.5	0.0	0.3		112	67
1264	38.4	0.0	0.3		111	68
1265	38.5	0.0	0.3		109	68
1266	38.4	0.0	0.3		109	68
1267	38.3	0.0	0.3		108	68
1268	38.5	0.0	0.3		107	68
1269	38.5	0.0	0.3		106	68
1270	38.3	0.0	0.3		105	68
1271	38.4	0.0	0.3		105	68
1272	38.5	0.0	0.3		104	68
1273	38.5	0.0	0.3		103	68
1274	38.4	0.0	0.3		103	68
1275	38.6	0.0	0.3		102	68
1276	38.4	0.0	0.3		102	68
1277	38.4	0.0	0.3		101	68
1278	38.5	0.0	0.3		100	68
1279	38.5	0.0	0.3		100	68
1280	38.5	0.0	0.3		99	68
1281	38.5	0.0	0.3		98	68

1282	38.3	0.0	0.4		98	68
1283	38.5	0.0	0.4		98	68
1284	38.5	0.0	0.4		97	68
1285	38.4	0.0	0.4		97	68
1286	38.4	0.0	0.4		97	68
1287	38.5	0.2	1.7		131	68
1288	38.4	0.0	0.4		144	68
1289	38.3	0.0	0.3		129	68
1290	38.3	0.0	0.2		119	68
1291	38.5	0.0	0.2		113	68
1292	38.4	0.0	0.2		109	68
1293	38.3	0.0	0.2		107	68
1294	38.4	0.0	0.2		105	68
1295	38.3	0.0	0.2		103	68
1296	38.2	0.0	0.2		102	68
1297	38.3	0.0	0.2		101	68
1298	38.4	0.0	0.2		100	68
1299	38.3	0.0	0.2		100	68
1300	38.4	0.0	0.2		99	68
1301	38.3	0.0	0.2		98	68
1302	38.2	0.0	0.2		98	68
1303	38.3	0.0	0.2		97	68
1304	38.4	0.0	0.2		96	68
1305	38.4	0.0	0.2		96	68
1306	38.2	0.0	0.2		95	68
1307	38.3	0.0	0.2		95	68
1308	38.2	0.0	0.2		94	68
1309	38.2	0.0	0.2		94	68
1310	38.4	0.0	0.2		94	68
1311	38.3	0.0	0.2		93	67
1312	38.2	0.0	0.2		93	68
1313	38.3	0.0	0.2		93	68
1314	38.3	0.0	0.2		92	68
1315	38.3	0.0	0.2		92	67
1316	38.3	0.0	0.2		92	68
1317	38.4	0.0	0.2		91	68
1318	38.2	0.0	0.2		90	68
1319	38.2	0.1	0.8		129	68
1320	38.2	0.0	0.3		130	68
1321	38.1	0.0	0.2		118	68
1322	38.3	0.0	0.2		110	67
1323	38.1	0.0	0.2		106	68

1324	38.3	0.0	0.2		102	68
1325	38.2	0.0	0.2		101	68
1326	38.2	0.0	0.2		99	68
1327	38.2	0.0	0.2		98	67
1328	38.4	0.0	0.1		97	68
1329	38.3	0.0	0.1		96	68
1330	38.2	0.0	0.1		95	68
1331	38.3	0.0	0.1		95	68
1332	38.2	0.0	0.1		94	68
1333	38.3	0.0	0.1		94	68
1334	38.2	0.0	0.1		93	68
1335	38.2	0.0	0.1		92	67
1336	38.3	0.0	0.2		92	68
1337	38.2	0.0	0.2		92	68
1338	38.2	0.0	0.2		92	68
1339	38.1	0.0	0.2		91	68
1340	38.2	0.0	0.2		90	68
1341	38.1	0.0	0.2		90	68
1342	38.1	0.0	0.2		90	68
1343	38.2	0.0	0.2		90	68
1344	38.1	0.0	0.2		89	68
1345	38.2	0.0	0.2		89	67
1346	38.2	0.0	0.2		89	68
1347	38.2	0.0	0.2		88	68
1348	38.1	0.0	0.2		88	68
1349	38.2	0.0	0.2		88	67
1350	38.4	0.1	0.6		112	67
1351	38.1	0.0	0.4		132	67
1352	38.1	0.0	0.3		119	67
1353	38.2	0.0	0.2		110	68
1354	38.1	0.0	0.2		104	68
1355	38.2	0.0	0.2		100	68
1356	38.2	0.0	0.2		98	67
1357	38.0	0.0	0.2		97	68
1358	38.2	0.0	0.2		95	67
1359	38.1	0.0	0.2		95	67
1360	38.2	0.0	0.2		93	68
1361	38.2	0.0	0.2		92	67
1362	38.1	0.0	0.2		92	67
1363	38.3	0.0	0.2		92	68
1364	38.1	0.0	0.1		91	68
1365	38.1	0.0	0.1		90	68

1366	38.1	0.1	1.0		118	67
1367	38.2	0.1	0.6		138	68
1368	37.8	0.2	1.0		147	67
1369	37.9	0.6	1.7		155	67
1370	37.7	1.0	3.0		163	67
1371	37.5	1.7	5.1		175	67
1372	37.2	2.1	6.3		188	67
1373	37.0	1.8	6.6		201	67
1374	36.8	1.9	7.6		211	67
1375	36.6	1.8	8.0		220	68
1376	36.2	1.8	9.2		229	68
1377	35.9	1.7	9.9		238	67
1378	35.4	1.7	10.4		245	67
1379	35.2	1.6	11.2		252	67
1380	34.6	1.5	11.0		258	67
1381	34.4	1.4	11.3		264	67
1382	33.9	1.4	11.7		270	67
1383	33.3	1.0	12.6		278	67
1384	33.0	0.7	13.2		287	67
1385	32.5	0.6	13.3		294	68
1386	32.0	0.5	13.8		301	67
1387	31.7	0.5	13.7		307	68
1388	31.2	0.4	14.1		311	67
1389	30.8	0.3	14.0		312	67
1390	30.5	0.2	14.2		312	68
1391	29.8	0.2	14.4		315	67
1392	29.3	0.1	14.6		318	67
1393	28.7	0.1	16.2		327	67
1394	28.3	0.1	17.0		339	67
1395	27.8	0.1	16.6		347	67
1396	27.0	0.1	16.4		352	68
1397	26.7	0.0	16.4		355	68
1398	26.5	0.1	14.4		332	68
1399	26.1	0.4	17.9		302	68
1400	26.1	0.4	14.6		284	67
1401	25.8	1.2	17.2		271	68
1402	25.8	0.5	15.6		260	68
1403	25.8	0.2	13.3		250	67
1404	25.7	0.1	11.4		243	67
1405	25.7	0.1	10.4		236	68
1406	25.5	0.3	9.2		230	68
1407	25.5	0.5	7.9		225	68

1408	25.4	0.8	6.8		220	68
1409	25.4	0.9	5.4		215	68
1410	25.3	0.9	3.8		212	68
1411	25.3	0.6	2.6		208	68
1412	25.4	0.8	3.1		205	68
1413	25.3	1.1	4.1		201	68
1414	25.3	1.3	4.7		197	68
1415	25.4	1.4	5.1		193	68
1416	25.4	1.5	5.4		189	68
1417	25.3	1.5	5.4		186	68
1418	25.4	1.6	5.6		182	68
1419	25.2	1.6	5.7		179	68
1420	25.3	1.6	5.6		176	68
1421	25.2	1.4	5.2		173	68
1422	25.3	1.5	5.3		170	68
1423	25.4	1.4	5.0		167	68
1424	25.3	1.4	5.0		164	68
1425	25.3	1.3	4.9		162	68
1426	25.4	1.3	4.7		160	67
1427	25.2	1.3	4.7		158	68
1428	25.4	1.2	4.6		155	68
1429	25.1	1.2	4.3		153	68
1430	25.3	1.2	4.3		151	68
1431	25.3	1.1	4.1		149	68
1432	25.2	1.1	4.1		147	68
1433	25.3	1.1	4.0		145	68
1434	25.4	1.0	3.9		143	68
1435	25.2	1.0	3.9		141	68
1436	25.4	1.0	3.7		140	68
1437	25.4	0.9	3.6		139	68
1438	25.4	1.0	3.7		137	68
1439	25.2	0.9	3.6		135	68
1440	25.2	1.5	5.5		156	68
1441	25.0	0.5	2.6		183	68
1442	25.0	0.6	2.6		170	68
1443	25.0	0.5	2.2		157	68
1444	25.1	0.4	2.1		149	68
1445	24.9	0.4	2.0		144	68
1446	24.8	0.4	1.9		140	68
1447	24.9	0.4	2.1		137	68
1448	25.0	0.3	2.0		135	68
1449	25.1	0.3	2.0		133	68

1450	24.9	0.3	2.1		131	68
1451	25.1	0.3	2.0		129	68
1452	25.0	0.3	2.1		128	68
1453	24.8	0.3	2.0		126	68
1454	25.0	0.3	2.0		125	68
1455	25.0	0.3	2.0		124	68
1456	25.1	0.3	1.9		122	68
1457	25.0	0.3	1.9		121	68
1458	25.0	0.3	1.9		121	68
1459	25.0	0.3	1.8		119	68
1460	24.9	0.3	1.8		119	68
1461	24.9	0.3	1.8		118	68
1462	24.9	0.2	1.7		116	68
1463	25.1	0.3	1.8		116	68
1464	25.0	0.2	1.7		115	68
1465	24.9	0.2	1.7		114	68
1466	24.8	0.2	1.7		113	67
1467	25.0	0.2	1.7		112	67
1468	24.7	0.2	1.6		111	67
1469	24.9	0.2	1.6		110	67
1470	24.9	0.2	1.6		110	67
1471	25.0	0.2	1.6		109	67
1472	24.8	0.3	2.0		147	66
1473	24.7	0.1	0.5		158	66
1474	24.8	0.0	0.4		140	66
1475	24.8	0.0	0.3		130	66
1476	24.8	0.0	0.3		124	66
1477	24.9	0.0	0.3		120	66
1478	24.8	0.0	0.3		118	66
1479	24.8	0.0	0.3		115	66
1480	24.7	0.0	0.3		113	65
1481	24.8	0.0	0.4		112	65
1482	24.7	0.1	0.4		111	65
1483	24.8	0.1	0.4		110	65
1484	24.8	0.1	0.5		109	65
1485	24.8	0.1	0.5		108	65
1486	24.8	0.1	0.5		108	65
1487	24.9	0.1	0.6		107	65
1488	24.8	0.1	0.6		106	65
1489	24.9	0.1	0.6		106	65
1490	24.8	0.1	0.6		105	64
1491	24.9	0.1	0.7		104	64

1492	24.7	0.1	0.7		103	64
1493	24.9	0.1	0.7		102	64
1494	24.8	0.1	0.7		101	64
1495	24.8	0.1	0.7		101	64
1496	24.9	0.1	0.8		101	64
1497	24.9	0.1	0.8		100	64
1498	24.7	0.1	0.8		100	64
1499	24.7	0.1	0.8		99	64
1500	24.8	0.1	0.8		98	64
1501	24.8	0.1	0.8		98	64
1502	24.8	0.1	0.8		97	64
1503	24.9	0.1	0.9		120	64
1504	24.8	0.1	1.0		144	64
1505	24.7	0.0	0.4		135	64
1506	24.8	0.0	0.3		123	64
1507	24.8	0.0	0.3		115	64
1508	24.9	0.0	0.2		110	63
1509	24.9	0.0	0.2		107	64
1510	24.8	0.0	0.2		105	63
1511	24.8	0.0	0.2		103	63
1512	24.9	0.0	0.2		102	63
1513	24.8	0.0	0.2		101	63
1514	24.8	0.0	0.2		100	63
1515	24.8	0.0	0.2		99	63
1516	24.5	0.0	0.2		98	63
1517	24.8	0.0	0.2		98	63
1518	24.8	0.0	0.2		97	63
1519	24.9	0.0	0.2		96	63
1520	24.9	0.0	0.2		96	63
1521	25.0	0.0	0.3		95	63
1522	24.9	0.0	0.3		95	63
1523	24.7	0.0	0.3		94	63
1524	24.8	0.0	0.3		94	63
1525	25.0	0.0	0.3		93	63
1526	24.8	0.0	0.3		93	63
1527	24.9	0.0	0.3		92	63
1528	24.9	0.0	0.4		92	63
1529	24.8	0.0	0.4		92	63
1530	24.8	0.0	0.4		91	63
1531	24.9	0.1	0.4		91	63
1532	24.8	0.1	0.4		90	63
1533	24.8	0.1	0.4		90	63

1534	24.9	0.1	0.4		89	63
1535	24.9	0.3	1.5		121	63
1536	24.9	0.0	0.4		138	63
1537	24.8	0.0	0.3		121	63
1538	24.8	0.0	0.2		112	63
1539	24.8	0.0	0.2		106	63
1540	24.8	0.0	0.2		102	63
1541	25.0	0.0	0.2		100	63
1542	24.9	0.0	0.2		98	64
1543	24.7	0.0	0.2		97	64
1544	25.0	0.0	0.2		96	64
1545	24.9	0.0	0.2		95	64
1546	24.9	0.0	0.2		93	64
1547	24.8	0.0	0.2		93	64
1548	24.8	0.0	0.2		92	64
1549	24.9	0.0	0.2		92	64
1550	24.9	0.0	0.2		91	65
1551	24.9	0.0	0.2		91	65
1552	24.8	0.0	0.2		90	65
1553	25.0	0.0	0.2		90	65
1554	24.9	0.0	0.2		90	65
1555	24.9	0.0	0.2		89	65
1556	24.8	0.0	0.2		89	65
1557	24.9	0.0	0.2		89	65
1558	24.9	0.0	0.2		88	65
1559	24.9	0.0	0.2		88	65
1560	24.9	0.0	0.2		88	65
1561	24.9	0.0	0.2		87	65
1562	24.8	0.0	0.2		87	65
1563	24.8	0.0	0.3		87	65
1564	24.9	0.0	0.2		86	65
1565	24.9	0.0	0.3		86	65
1566	24.9	0.0	0.3		88	65
1567	24.9	0.1	0.6		130	65
1568	24.9	0.0	0.2		127	65
1569	24.9	0.0	0.2		113	65
1570	24.8	0.0	0.2		106	65
1571	24.8	0.0	0.2		101	65
1572	25.0	0.0	0.2		98	65
1573	24.8	0.0	0.2		97	65
1574	24.9	0.0	0.2		96	65
1575	24.8	0.0	0.1		94	65

1576	24.9	0.0	0.1		93	65
1577	24.9	0.0	0.1		92	65
1578	24.9	0.0	0.1		92	65
1579	24.8	0.0	0.1		91	65
1580	24.9	0.0	0.1		91	65
1581	25.0	0.0	0.1		90	66
1582	24.9	0.0	0.1		90	66
1583	24.9	0.0	0.1		89	66
1584	24.9	0.0	0.1		89	66
1585	24.8	0.0	0.1		88	66
1586	24.9	0.0	0.2		88	66
1587	24.8	0.0	0.2		87	66
1588	24.8	0.0	0.2		88	66
1589	24.9	0.0	0.2		87	66
1590	24.8	0.0	0.2		87	66
1591	24.9	0.0	0.2		86	66
1592	24.9	0.0	0.2		86	66
1593	24.8	0.0	0.2		86	66
1594	24.7	0.0	0.2		86	66
1595	24.8	0.0	0.2		85	66
1596	24.9	0.0	0.2		86	66
1597	24.7	0.0	0.2		86	66
1598	24.8	0.3	1.0		111	66
1599	24.7	0.1	0.4		133	66
1600	25.0	0.1	0.2		138	66
1601	24.7	0.0	0.2		121	66
1602	24.9	0.0	0.2		111	66
1603	24.8	0.0	0.2		105	66
1604	24.8	0.0	0.2		102	66
1605	24.6	0.0	0.2		99	66
1606	24.8	0.0	0.2		97	66
1607	24.8	0.0	0.1		96	66
1608	24.8	0.0	0.1		95	66
1609	24.9	0.0	0.1		94	66
1610	24.7	0.0	0.1		94	66
1611	24.7	0.0	0.1		93	66
1612	24.6	0.0	0.1		93	66
1613	24.8	0.0	0.1		92	66
1614	24.8	0.0	0.1		92	66
1615	24.6	0.4	1.3		114	66
1616	24.6	0.2	0.8		139	66
1617	24.6	0.3	1.2		148	66

1618	24.3	0.6	2.4		156	66
1619	24.0	1.3	4.9		167	66
1620	23.9	1.9	7.6		179	66
1621	23.6	2.2	8.2		198	66
1622	23.2	2.2	9.1		216	66
1623	22.9	2.2	10.1		229	66
1624	22.7	2.0	11.0		240	66
1625	22.2	1.4	12.6		251	66
1626	21.8	0.6	14.6		266	66
1627	21.5	0.2	15.4		279	67
1628	20.9	0.1	15.8		290	66
1629	20.6	0.1	15.7		295	66
1630	20.3	0.1	15.6		301	67
1631	19.9	0.1	15.9		309	67
1632	19.4	0.1	16.0		317	66
1633	18.9	0.1	16.0		324	67
1634	18.3	0.1	16.0		329	67
1635	17.9	0.1	15.9		334	66
1636	17.5	0.1	16.0		339	66
1637	17.0	0.1	15.9		342	67
1638	16.6	0.1	15.8		344	66
1639	16.1	0.1	15.7		348	66
1640	15.9	0.1	15.6		350	67
1641	15.3	0.1	15.7		348	67
1642	14.7	0.1	15.4		352	67
1643	14.4	0.1	15.5		357	67
1644	14.4	0.1	14.1		341	67
1645	14.2	0.0	14.0		308	67
1646	13.9	0.1	12.5		289	67
1647	13.8	0.4	14.7		276	67
1648	13.8	0.2	13.0		265	67
1649	13.6	0.1	11.0		255	67
1650	13.6	0.2	9.0		247	67
1651	13.7	0.2	7.8		240	67
1652	13.5	0.3	6.4		233	67
1653	13.5	0.4	5.2		228	67
1654	13.6	0.4	4.4		222	67
1655	13.5	0.3	3.8		218	67
1656	13.4	0.3	3.0		214	67
1657	13.5	0.2	2.0		211	67
1658	13.3	0.2	1.6		207	67
1659	13.4	0.4	2.1		203	66

1660	13.5	0.5	2.6		199	67
1661	13.3	0.7	3.4		195	67
1662	13.3	1.0	4.1		191	67
1663	13.4	1.1	4.6		188	67
1664	13.3	1.2	4.9		185	66
1665	13.4	1.3	5.3		181	67
1666	13.4	1.4	5.4		178	67
1667	13.4	1.4	5.5		175	67
1668	13.3	1.3	5.3		172	67
1669	13.3	1.4	5.3		169	67
1670	13.4	1.3	5.1		167	67
1671	13.3	1.4	5.3		164	67
1672	13.4	1.4	5.3		161	67
1673	13.3	1.3	5.1		159	67
1674	13.3	1.3	5.1		157	67
1675	13.2	1.3	5.1		155	67
1676	13.2	1.3	4.9		152	67
1677	13.3	1.2	4.8		150	67
1678	13.5	1.3	4.9		148	67
1679	13.2	1.3	4.9		146	67
1680	13.4	1.2	4.9		144	67
1681	13.4	1.3	4.9		142	67
1682	13.5	1.2	4.8		140	67
1683	13.4	1.3	4.9		139	67
1684	13.3	1.2	4.8		137	66
1685	13.1	1.2	4.8		136	67
1686	13.4	1.3	5.1		153	67
1687	13.1	0.7	3.2		179	67
1688	13.2	0.9	3.1		171	67
1689	13.1	0.7	2.8		158	67
1690	13.1	0.6	2.6		149	67
1691	13.0	0.5	2.5		144	67
1692	13.2	0.5	2.5		140	67
1693	13.0	0.5	2.4		137	67
1694	13.1	0.4	2.2		135	67
1695	13.1	0.4	2.2		133	67
1696	13.1	0.4	2.1		131	67
1697	13.2	0.4	2.0		129	67
1698	13.1	0.3	2.0		127	67
1699	13.3	0.3	2.0		125	67
1700	13.2	0.3	2.1		125	67
1701	13.1	0.3	2.0		123	67

1702	13.3	0.3	2.0		122	67
1703	13.1	0.3	2.0		121	67
1704	13.0	0.3	2.1		120	67
1705	13.0	0.3	2.0		118	67
1706	13.1	0.3	2.0		117	67
1707	13.2	0.3	2.0		116	67
1708	13.1	0.3	2.0		116	67
1709	13.1	0.3	1.9		115	67
1710	13.1	0.3	1.9		114	67
1711	13.1	0.3	1.9		113	67
1712	13.2	0.3	1.9		113	67
1713	13.2	0.3	1.9		112	67
1714	13.1	0.3	1.9		111	67
1715	13.1	0.2	1.8		110	67
1716	13.1	0.2	1.8		109	67
1717	13.1	0.2	1.8		108	67
1718	13.1	0.3	2.5		142	67
1719	13.1	0.1	0.6		163	67
1720	13.1	0.0	0.5		143	67
1721	13.0	0.0	0.4		132	67
1722	13.1	0.0	0.4		125	67
1723	13.2	0.0	0.3		121	67
1724	13.1	0.0	0.3		118	67
1725	13.0	0.0	0.3		116	67
1726	13.1	0.0	0.3		114	67
1727	13.1	0.0	0.3		113	67
1728	13.0	0.0	0.4		111	67
1729	13.1	0.0	0.4		110	67
1730	13.2	0.0	0.4		109	67
1731	13.0	0.0	0.4		109	67
1732	13.0	0.0	0.5		108	67
1733	13.1	0.0	0.5		107	67
1734	13.1	0.0	0.5		106	67
1735	13.0	0.1	0.6		105	67
1736	13.2	0.1	0.6		104	67
1737	13.0	0.1	0.7		104	67
1738	13.0	0.1	0.7		103	67
1739	13.0	0.1	0.7		103	67
1740	13.0	0.1	0.7		102	67
1741	13.0	0.1	0.8		101	67
1742	13.1	0.1	0.8		100	67
1743	13.0	0.1	0.8		100	67

1744	13.0	0.1	0.8		100	67
1745	13.0	0.1	0.8		99	67
1746	13.1	0.1	0.8		99	67
1747	13.1	0.1	0.9		98	67
1748	13.0	0.1	0.9		98	67
1749	12.9	0.1	0.9		99	67
1750	13.1	0.1	1.4		140	67
1751	13.2	0.0	0.5		137	67
1752	13.1	0.0	0.4		124	67
1753	13.0	0.0	0.4		116	67
1754	13.1	0.0	0.3		111	67
1755	13.0	0.0	0.3		108	67
1756	13.1	0.0	0.3		106	67
1757	13.0	0.0	0.2		104	67
1758	13.0	0.0	0.2		103	67
1759	13.1	0.0	0.2		102	67
1760	13.1	0.0	0.2		101	67
1761	13.1	0.0	0.2		100	67
1762	13.0	0.0	0.2		100	67
1763	13.0	0.0	0.2		99	67
1764	13.0	0.0	0.2		98	67
1765	13.1	0.0	0.2		98	67
1766	13.0	0.0	0.2		97	67
1767	12.9	0.0	0.2		96	66
1768	13.1	0.0	0.2		96	67
1769	13.1	0.0	0.2		96	66
1770	12.9	0.0	0.2		95	66
1771	13.1	0.0	0.2		95	66
1772	13.0	0.0	0.2		95	66
1773	13.0	0.0	0.3		95	66
1774	13.0	0.0	0.3		94	66
1775	13.0	0.0	0.3		93	66
1776	13.0	0.0	0.3		93	65
1777	13.0	0.0	0.3		92	65
1778	13.0	0.0	0.3		92	65
1779	13.1	0.0	0.3		91	65
1780	13.0	0.0	0.3		91	65
1781	13.1	0.2	1.2		117	65
1782	12.9	0.0	0.4		141	64
1783	12.9	0.0	0.3		124	65
1784	13.0	0.0	0.2		114	64
1785	12.9	0.0	0.2		108	64

1786	12.9	0.0	0.2		104	64
1787	13.0	0.0	0.2		102	64
1788	13.0	0.0	0.2		100	64
1789	13.0	0.0	0.2		99	64
1790	12.9	0.0	0.2		97	64
1791	12.9	0.0	0.1		96	64
1792	13.2	0.0	0.1		95	64
1793	13.0	0.0	0.1		95	64
1794	12.9	0.0	0.1		94	64
1795	12.9	0.0	0.1		94	64
1796	13.0	0.0	0.1		93	63
1797	13.1	0.0	0.1		93	64
1798	12.9	0.0	0.1		92	63
1799	13.0	0.0	0.1		91	63
1800	13.0	0.0	0.1		91	63
1801	12.9	0.0	0.1		90	63
1802	13.1	0.0	0.1		90	63
1803	13.0	0.0	0.2		90	63
1804	13.1	0.0	0.2		89	63
1805	13.1	0.0	0.2		89	63
1806	13.0	0.0	0.2		89	63
1807	13.0	0.0	0.2		88	63
1808	12.9	0.0	0.2		88	63
1809	13.0	0.0	0.2		87	63
1810	13.0	0.0	0.2		87	63
1811	13.0	0.0	0.2		87	63
1812	13.0	0.0	0.2		86	63
1813	13.0	0.1	0.5		125	63
1814	13.1	0.0	0.2		128	63
1815	13.1	0.0	0.2		113	63
1816	13.1	0.0	0.2		105	63
1817	13.1	0.0	0.2		101	63
1818	13.0	0.0	0.2		98	62
1819	13.1	0.0	0.1		96	62
1820	13.2	0.0	0.1		95	62
1821	13.1	0.0	0.1		94	62
1822	13.2	0.0	0.1		93	62
1823	13.1	0.0	0.1		92	62
1824	13.0	0.0	0.1		91	62
1825	13.1	0.0	0.1		90	62
1826	13.0	0.0	0.1		90	62
1827	13.0	0.0	0.1		89	62

1828	13.1	0.0	0.2		89	62
1829	13.1	0.0	0.2		89	62
1830	13.1	0.0	0.2		88	62
1831	13.1	0.0	0.2		88	62
1832	13.1	0.3	2.7		109	62
1833	12.9	0.6	2.7		140	62
1834	12.7	1.4	4.3		157	62
1835	12.3	2.9	7.3		171	62
1836	11.9	3.0	7.9		190	62
1837	11.9	3.6	9.1		210	62
1838	11.5	3.6	9.5		223	62
1839	11.4	3.4	9.6		233	62
1840	11.0	3.1	9.8		241	62
1841	10.7	2.8	10.3		249	62
1842	10.3	2.5	11.1		258	62
1843	9.9	1.5	13.1		269	62
1844	9.7	1.4	13.0		279	62
1845	9.3	0.8	13.8		290	62
1846	9.1	0.6	13.8		298	62
1847	8.6	0.6	13.6		304	62
1848	8.2	0.5	13.8		310	63
1849	7.8	0.4	13.8		315	62
1850	7.5	0.7	13.7		319	63
1851	7.2	0.8	13.8		321	63
1852	6.7	0.8	13.7		325	63
1853	6.4	0.5	14.0		329	63
1854	5.9	0.7	13.7		331	63
1855	5.5	0.4	14.2		335	63
1856	5.4	0.3	14.6		340	64
1857	4.9	0.3	14.4		343	64
1858	4.6	0.2	14.3		345	64
1859	4.2	0.2	13.2		333	64
1860	4.2	0.0	11.8		301	65
1861	4.1	0.1	11.1		282	64
1862	4.0	0.3	13.4		269	64
1863	3.9	0.2	12.5		258	64
1864	3.8	0.1	11.1		249	64
1865	3.8	0.1	9.8		241	64
1866	3.7	0.1	8.9		234	64
1867	3.7	0.2	7.8		228	64
1868	3.7	0.2	6.8		223	64
1869	3.7	0.3	6.1		218	64

1870	3.6	0.3	5.6		213	65
1871	3.7	0.3	4.7		209	65
1872	3.6	0.2	3.1		205	65
1873	3.7	0.3	2.6		201	65
1874	3.6	0.5	3.2		197	65
1875	3.5	0.8	4.1		193	65
1876	3.5	1.0	4.9		190	65
1877	3.4	1.2	5.4		186	65
1878	3.6	1.5	6.0		182	65
1879	3.4	1.6	6.3		179	65
1880	3.5	1.7	6.6		176	65
1881	3.5	1.8	6.8		173	65
1882	3.6	1.8	6.9		170	65
1883	3.4	1.8	6.6		167	65
1884	3.5	1.8	6.8		164	65
1885	3.5	1.9	7.0		161	65
1886	3.4	1.9	7.0		159	65
1887	3.5	1.8	6.6		157	65
1888	3.5	1.8	6.8		155	65
1889	3.5	1.9	6.8		152	65
1890	3.4	1.8	6.7		150	65
1891	3.4	1.8	6.7		148	65
1892	3.5	1.8	6.6		146	65
1893	3.5	1.9	7.1		144	65
1894	3.6	1.8	6.8		142	65
1895	3.4	1.8	6.8		141	65
1896	3.6	1.8	6.6		139	65
1897	3.5	1.8	6.7		137	65
1898	3.4	1.7	6.5		136	65
1899	3.5	1.7	6.4		134	65
1900	3.3	1.7	6.3		133	65
1901	3.3	1.7	6.4		150	65
1902	3.3	0.6	3.3		175	65
1903	3.4	0.7	2.9		169	65
1904	3.4	0.5	2.4		155	65
1905	3.2	0.5	2.1		146	65
1906	3.3	0.4	2.0		141	65
1907	3.3	0.4	1.9		137	66
1908	3.2	0.3	1.8		134	65
1909	3.2	0.3	1.9		131	65
1910	3.3	0.3	1.8		129	65
1911	3.3	0.3	1.8		127	65

1912	3.3	0.3	1.8		126	65
1913	3.3	0.3	1.8		125	65
1914	3.3	0.3	1.7		123	65
1915	3.4	0.3	1.8		122	66
1916	3.3	0.2	1.8		120	65
1917	3.2	0.3	1.9		119	65
1918	3.2	0.3	1.9		118	65
1919	3.3	0.3	2.1		117	65
1920	3.2	0.3	2.1		116	65
1921	3.2	0.3	2.3		115	65
1922	3.4	0.3	2.4		114	65
1923	3.3	0.3	2.5		113	65
1924	3.3	0.3	2.6		112	65
1925	3.2	0.3	2.6		111	65
1926	3.3	0.3	2.6		110	66
1927	3.3	0.3	2.6		109	66
1928	3.3	0.4	2.8		109	66
1929	3.2	0.3	2.7		108	66
1930	3.2	0.4	2.8		107	66
1931	3.3	0.4	2.8		107	66
1932	3.3	0.3	2.8		106	66
1933	3.1	0.5	3.9		139	66
1934	3.2	0.2	1.1		162	66
1935	3.1	0.2	0.8		142	66
1936	3.2	0.2	0.7		130	66
1937	3.3	0.2	0.6		124	66
1938	3.2	0.1	0.6		119	66
1939	3.1	0.1	0.5		116	66
1940	3.2	0.1	0.5		114	66
1941	3.2	0.1	0.5		113	65
1942	3.1	0.1	0.5		111	66
1943	3.2	0.1	0.5		110	66
1944	3.3	0.1	0.5		109	66
1945	3.2	0.1	0.5		108	66
1946	3.2	0.1	0.5		106	66
1947	3.1	0.1	0.5		106	66
1948	3.2	0.1	0.5		105	66
1949	3.0	0.1	0.4		104	66
1950	3.2	0.1	0.4		103	66
1951	3.0	0.0	0.4		103	66
1952	3.1	0.0	0.4		102	66
1953	3.2	0.0	0.4		101	66

1954	3.2	0.0	0.4		101	66
1955	3.0	0.0	0.4		100	66
1956	3.2	0.0	0.4		100	65
1957	3.1	0.0	0.4		99	66
1958	3.1	0.0	0.4		98	66
1959	3.2	0.0	0.4		98	66
1960	3.2	0.0	0.4		97	66
1961	3.1	0.0	0.4		97	66
1962	3.1	0.0	0.4		96	66
1963	3.2	0.0	0.4		95	66
1964	3.2	0.0	0.4		95	66
1965	3.1	0.2	2.1		138	66
1966	3.0	0.0	0.6		137	66
1967	3.1	0.0	0.5		122	66
1968	3.3	0.0	0.4		114	66
1969	3.1	0.0	0.4		109	66
1970	3.1	0.0	0.3		106	66
1971	3.1	0.0	0.3		104	66
1972	3.2	0.0	0.3		102	66
1973	3.2	0.0	0.3		101	66
1974	3.2	0.0	0.3		100	66
1975	3.2	0.0	0.3		100	66
1976	3.1	0.0	0.3		99	66
1977	3.2	0.0	0.3		98	66
1978	3.1	0.0	0.3		98	66
1979	3.1	0.0	0.3		97	66
1980	3.2	0.0	0.3		96	66
1981	3.0	0.0	0.3		96	66
1982	3.2	0.0	0.3		95	66
1983	3.1	0.0	0.3		95	66
1984	3.2	0.0	0.3		94	66
1985	3.1	0.0	0.4		94	66
1986	3.1	0.0	0.4		93	66
1987	3.1	0.0	0.4		93	66
1988	3.1	0.0	0.4		93	66
1989	3.1	0.0	0.4		93	66
1990	3.1	0.0	0.4		92	66
1991	3.1	0.0	0.5		92	66
1992	3.1	0.0	0.5		91	66
1993	3.1	0.0	0.5		91	66
1994	3.1	0.0	0.5		90	66
1995	3.1	0.1	0.5		90	66

1996	3.1	0.3	2.5		113	66
1997	3.2	0.1	0.6		138	66
1998	3.1	0.0	0.4		122	66
1999	3.2	0.0	0.4		112	66
2000	3.2	0.0	0.3		105	66
2001	3.1	0.0	0.3		102	66
2002	3.1	0.0	0.3		100	66
2003	3.0	0.0	0.3		98	66
2004	3.1	0.0	0.2		98	66
2005	3.1	0.0	0.2		97	66
2006	3.1	0.0	0.2		95	66
2007	3.0	0.0	0.2		95	66
2008	3.1	0.0	0.2		94	66
2009	3.1	0.0	0.2		93	66
2010	3.1	0.0	0.2		93	66
2011	3.0	0.0	0.2		93	66
2012	3.0	0.0	0.2		92	66
2013	3.1	0.0	0.2		92	66
2014	3.1	0.0	0.2		91	66
2015	3.1	0.0	0.2		91	66
2016	3.1	0.0	0.2		90	66
2017	3.1	0.0	0.2		90	66
2018	3.1	0.0	0.2		90	66
2019	3.1	0.0	0.2		89	66
2020	3.1	0.0	0.2		89	66
2021	3.0	0.0	0.2		88	66
2022	3.1	0.0	0.2		88	66
2023	3.2	0.0	0.2		88	66
2024	3.0	0.0	0.2		87	66
2025	3.0	0.0	0.2		87	66
2026	3.1	0.0	0.2		87	66
2027	3.0	0.0	0.2		87	66
2028	3.1	0.2	2.5		124	66
2029	3.1	0.0	0.6		129	66
2030	3.0	0.0	0.5		114	66
2031	3.0	0.0	0.4		106	66
2032	3.1	0.0	0.4		101	66
2033	3.1	0.0	0.4		98	66
2034	3.1	0.0	0.3		97	66
2035	2.9	0.1	1.1		121	66
2036	2.8	0.0	0.5		141	66
2037	2.9	0.1	0.6		149	66

2038	2.9	0.2	1.1		154	66
2039	2.8	0.7	2.2		159	66
2040	2.7	1.1	3.1		166	66
2041	2.4	1.4	4.2		172	66
2042	2.3	2.0	5.9		180	66
2043	2.1	2.0	6.3		194	66
2044	1.8	2.5	7.4		208	66
2045	1.6	2.6	8.3		219	66
2046	1.3	2.7	8.9		228	66
2047	1.0	2.6	9.5		237	66
2048	0.7	2.3	10.0		245	66
2049	0.4	2.1	10.6		253	66
2050	0.1	2.0	10.8		261	66
2051	0.0	1.8	10.9		268	66

OMNI-Test Laboratories, Inc.

ASTM E2618 Wood Heater Run Sheets

Client: Central Boiler Project Number: 0117WB040E Run Number: 4
Model: Edge 360 Tracking Number: 2399 Date: 12/16/19
Test Crew: B Davis
OMNI Equipment ID numbers:

Wood Heater Supplemental Data

Start Time: 1648 Booth #: E3
Stop Time: 2051 min.

Stack Gas Leak Check:
Initial: good Final: good

Sample Train Leak Check:
A: 0.0 @ 6 "Hg
B: 0.0 @ 8 "Hg

Calibrations: Span Gas CO_2: 17.04 CO: 4.29

	Pre Test		Post Test	
	Zero	Span	Zero	Span
Time	1618	1619	03:05	03:03
CO_2	0.00	17.01	0.22	~~17.0~~ 16.85
CO	0.00	4.28	0.023	~~4.2~~ 4.227

Air Velocity (ft/min): Initial: <50 Final: <50
Scale Audit (lbs): Initial: 10.0 Final: 10.0
Pitot Tube Leak Test: Initial: good Final: good
Stack Diameter (in): 6"
Induced Draft: 0.0
% Smoke Capture: 100%
Flue Pipe Cleaned Prior to First Test in Series:
Date: 12/4/19 Initials: DL

	Initial	Middle	Ending
P_b (in/Hg)	30.33		29.91
RH (%)	15.4		19.2
Ambient (°F)	63		66

Tunnel Traverse

Microtector Reading	dP (in H_2O)	T(°F)
1	0.11	68
2	0.14	68
3	0.14	68
4	0.14	68
5	0.14	68
6	0.13	68
1	0.11	68
2	0.14	
3	0.15	68
4	0.14	
5	0.14	68
6	0.11	68
Center:		
	0.15	68

Background Filter Volume: 489.424

Tunnel Static Pressure (in H_2O):	
Beginning of Test	End of Test
-.180	-.180

Technician Signature: [signature] Date: 1/9/20

OMNI-Test Laboratories, Inc.

ASTM E2618 Wood Heater Run Sheets

Client: Central Boiler Project Number: 0117WB040E Run Number: 4
Model: Edge 360 Tracking Number: 2399 Date: 12/16/19
Test Crew: B Davis
OMNI Equipment ID numbers:

Wood Heater Run Notes

Air Control Settings

Primary:

Heat draw set to ≈ 20,000 BTU/hr
Boiler set point 185 - 165 demand cycle.

Secondary: fixed

Tertiary/Pilot: N/A

Fan: Auto

Preburn Notes

Time	Notes
Ø	26 lbs set Heat draw to ≈ 20,000 BTU
1645	hit 164 set temp, demand mode on. 23.5 lbs on scale
forgot to	TARE 21.0 lbs - Ø = 20.73 lbs

Test Notes

Sketch test fuel configuration:

See photo

Start up procedures & Timeline:

Bypass: N/A
Fuel loaded by: 2 minutes
Door closed at: 2 minutes
Primary air: automatic

Notes: Heat draw 165 - 185 cycle

Time	Notes
60	Changed Front filter in Train A

Technician Signature: [signature] Date: 1/9/20

Run 5

Hydronic Heating Appliances - Test Method ASTM 2618
Results

Manufacturer: Central Boiler
Model: Edge 360
Tracking No.: 2399
Project No.: 0117WB040E
Run: 5
Test Date: December 18, 2019

Burn Rate	**2.26 kg/hr dry**
Average Tunnel Temperature	84 degrees F
Average Gas Velocity in Dilution Tunnel - vs	7.7 feet/second
Average Gas Flow Rate in Dilution Tunnel - Qsd	20563 dscf/hour
Average Delta p	0.014 inches H20
Average Delta H	1.31 inches H20
Total Time of Test	1194 minutes

PARTICULATE EMISSIONS RESULTS

First Hour:	**-0.02**	g/hr
	-0.01	g/kg
	0.00	lb/mmBTU output
Complete Run:	**2.19**	g/hr
	0.97	g/kg
	0.14	lb/mmBTU output

	SAMPLE TRAIN 1	SAMPLE TRAIN 2	AMBIENT SAMPLE TRAIN
Total Sample Volume - Vm	192.15 cubic feet	193.04 cubic feet	306.04 cubic feet
Average Gas Meter Temperature	83 degrees F	83 degrees F	72 degrees F
Total Sample Volume (Standard Conditions) - Vmstd	188.6 dscf	185.8 dscf	299.4 dscf
Total Particulates - mn	20.6 mg	19.7 mg	0.3 mg
Particulate Concentration (dry-standard)	0.000109 grams/dscf	0.000106 grams/dscf	0.000001 grams/dscf
Particulate Emissions	44.29 grams	42.98 grams	
Difference from Average	0.66 grams	0.66 grams	

Results Are Acceptable

	AVERAGE
Total Sample Volume - Vm	192.60 cubic feet
Average Gas Meter Temperature	83 degrees F
Total Sample Volume (Standard Conditions) - Vmstd	187.2 dscf
Particulate Concentration (dry-standard)	0.00011 grams/dscf
Particulate Emissions	43.64 grams
7.5% of the average particulate emissions	3.27 grams

ADDITIONAL ACCEPTANCE CRITERIA

Boiler Water Return Temperature >120 °F	**Acceptable**
Proportional Rate Variation >80%	**Acceptable**
90% of PR Values between 90-110%	**Acceptable**

	SAMPLE TRAIN 1 - FIRST HOUR
Total Sample Volume - Vm	9.59 cubic feet
Average Gas Meter Temperature	77 degrees F
Total Sample Volume (Standard Conditions) - Vmstd	9.52 dscf
Total Particulates - mn	0 mg
Particulate Concentration (dry-standard)	0.00000 grams/dscf
Particulate Emissions	-0.02 grams
Burn Rate	3.34 (dry kg/hr)
Heat Output Rate	35292 BTU/hr

Hydronic Heating Appliances
Results

Manufacturer:	Central Boiler	Equipment Numbers:	
Model:	Edge 360		
Tracking No.:	2399		
Project No.:	0117WB040E		
Run #:	5		
Date:	12/18/19		

TRAIN 1 (First Hour emissions)

Sample Component	Reagent	Filter, Probe or Dish #	Weights		
			Final, mg	Tare, mg	Particulate, mg
B. Front filter catch	Filter	D954	118.8	118.8	0.0
C. Rear filter catch	Filter				0.0
D. Probe catch*	Probe				0.0
E. Filter seals catch*	Seals				0.0

Sub-Total	Total Particulate, mg:	0.0

TRAIN 1 (Post First Hour Change-out)

Sample Component	Reagent	Filter, Probe or Dish #	Weights		
			Final, mg	Tare, mg	Particulate, mg
B. Front filter catch	Filter	D955	135.2	117.6	17.6
C. Rear filter catch	Filter	D956	118.9	119.0	-0.1
D. Probe catch*	Probe	67	117759.3	117757.9	1.4
E. Filter seals catch*	Seals	R909	3373.2	3371.5	1.7

Sub-Total	Total Particulate, mg:	20.6
Train 1 Aggregate	Total Particulate, mg:	**20.6**

TRAIN 2

Sample Component	Reagent	Filter, Probe or Dish #	Weights		
			Final, mg	Tare, mg	Particulate, mg
A. Front filter catch	Filter	D957	134.2	118.7	15.5
B. Rear filter catch	Filter	D958	114.0	118.4	-4.4
C. Probe catch*	Probe	68	116805.4	116804.0	1.4
D. Filter seals catch*	Seals	R910	4114.9	4107.7	7.2

Total Particulate, mg:	19.7

AMBIENT

Sample Component	Reagent	Filter # or Probe #	Weights		
			Final, mg	Tare, mg	Particulate, mg
A. Front filter catch*	Filter	D959	117.0	116.7	0.3

Total Particulate, mg:	0.3

*Particulate catch that results in a negative number, is assumed to be zero for probes and seals, negative numbers for filters are assumed to be part of the seal weight.

Component	Equations:
A. Front filter catch	Final (mg) - Tare (mg) = Particulate, mg
B. Rear filter catch	Final (mg) - Tare (mg) = Particulate, mg
C. Probe catch	Final (mg) - Tare (mg) = Particulate, mg

Hydronic Heating Appliances
Fuel Moisture

Manufacturer:	Central Boiler
Model:	Edge 360
Tracking No.:	2399
Project No.:	0117WB040E
Technician:	B. Davis
Run #:	5
Test Date:	December 18, 2019

Wet Weight (lb)	% Moisture				
10	23.1	18.7	20.4	21.2	25.5
8.8	24.5	19.2	25.3	19.9	23.5
9.9	25.2	21	25.4	25.8	24.2
9.2	21	19.4	21	18.6	19.8
9	24.9	23.7	24.5	21.6	22.5
9.8	20	18.4	18.7	19.5	22.5
9.8	20.9	18.2	21.5	19.3	19.1
6.8	20.6	26.1	24.8	20.3	23.4
8	26.6	23.1	25.8	25.3	20.4
11.2	23.1	19.5	24.5	19.4	23.8
9.3	20.8	18.9	21.6	22.4	23.6
9.3	21.5	19.7	21.9	21.3	22
9.7	22.5	24.6	23.4	19.9	21.8

Total Weight of Load (lb): 120.8

Total Moisture of Load (%): 22.0

Equipment Numbers:

Run: 5

Manufacturer: Central Boiler
Model: Edge 360
Tracking No.: 2399
Project No.: 0117WB040E
Test Date: December 18, 2019
Technician: B. Davis
Beginning Clock Time: 16:22
Recording Interval: 1 min.
Total Sampling Time: 1194 min.

Velocity Traverse Data

	Pt 1	Pt 2	Pt 3	Pt 4	Pt 5	Pt 6	Pt 7	Pt 8	Pt 9	Pt 10	Pt 11	Pt 12	Center	
Initial dP	0.012	0.014	0.014	0.016	0.014	0.010	0.011	0.012	0.014	0.014	0.016	0.011	0.014	"H2O
Initial Temp.	75	75	75	75	75	75	75	75	75	75	75	75	75	oF

Air Velocity: Initial: <50 Final: <50
Scale Audit: Pre: 10.0 Post: 10.0
Pitot Tube Leak Test: Pre: 0 Post: 0
Flue Pipe Cleaned Prior to First Test in Series: Date:

Induced Draft: 0
% Smoke Capture: 100

V_{strav} 7.65 ft/sec
V_{scent} 7.90 ft/sec
F_p 0.967

PM Control Module: 335, 336
Dilution Tunnel MW(dry): 29.00 lb/lb-mole
Dilution Tunnel MW(wet): 28.78 lb/lb-mole
Dilution Tunnel H2O: 2.00 percent
Dilution Tunnel Static: -0.177 "H2O
Pitot Tube Cp: 0.99

	(1)	(2)	(amb)
Meter Box Y Factor:	1.009	0.99	0.988

Barometric Pressure:	Begin	Middle	End	Average
	29.85	29.63	29.81	29.83 "Hg

Tunnel Velocity: 7.67 ft/sec
Intial Tunnel Flow: 347.2 scfm
Average Tunnel Flow: 342.7 scfm
Tunnel Area: 0.785 ft2
Post-Test Leak Check (1): 0.000 cfm @ 8 in. Hg
Post-Test Leak Check (2): 0.000 cfm @ 8 in. Hg
Fuel Moisture (dry basis %): 22.0
Total Particulate (1): 20.6
Total Particulate (2): 19.7

Elapsed Time	Gas Meter Cubic Feet (1)	Gas Meter Cubic Feet (2)	Gas Meter Cubic Feet (amb)	Sample Rate, cfm (1)	Sample Rate, cfm (2)	Orifice dH (1)	Orifice dH (2)	Orifice dH (amb)	Meter oF (1)	Meter oF (2)	Meter oF (amb)	Meter Vac. in. Hg. (1)	Meter Vac. in. Hg. (2)	Dilution Tunnel Temp.	Dilution Tunnel dP	Pro. Rate (%) (1)	Pro. Rate (%) (2)	Scale Reading	Weight Change	Load Side Liquid Flow Rate	Boiler Side Liquid Flow Rate (optional)	Thermopile ΔT	Boiler to Heat Exch. Temp.	Heat Exch to Boiler Temp.	Inlet Load Temp.	Outlet Load Temp.	Stack	Filter (1)	Filter (2)	Ambient		Specific Heat of Inlet Water (BTU/lb-°F)	Mass Flow Rate of Inlet Water (lb/min)	Heat Output, Btu
	Particulate Sampling Data																	Fuel Weight, lb		Flow, gpm		Temperature Data, oF									Stack			
0	0.000	0.000	0.000			0.01	0.60	0.25	73	73	71	1.20	1.86	103	0.014			120.8		0.64		109.2	169.1	165.5	59.3	168.5	288	73	73	71				
1	0.153	0.159		0.15	0.16	1.31	1.08	0.25	73	73	71	1.40	1.88	94	0.013	101	104	119.9	0.95	0.70		109.6	169.3	165.7	59.3	168.9	287	74	74	71		1.001	5.829	640
2	0.311	0.320		0.16	0.16	1.32	1.06	0.25	73	73	71	1.40	1.93	97	0.015	97	99	119.2	0.68	0.60		110.0	169.7	166.1	59.3	169.4	309	74	74	71		1.001	5.024	553
3	0.470	0.481		0.16	0.16	1.33	1.07	0.25	73	73	71	1.40	1.92	102	0.014	102	103	118.6	0.56	0.60		110.9	171.0	167.3	59.4	170.3	322	75	75	71		1.001	5.026	558
4	0.630	0.642		0.16	0.16	1.33	1.07	0.25	73	73	71	1.40	1.93	105	0.012	111	111	118.1	0.48	0.66		111.9	172.3	168.4	59.5	171.4	331	75	75	71		1.001	5.508	617
5	0.789	0.802		0.16	0.16	1.32	1.06	0.25	73	73	71	1.40	1.93	105	0.012	110	110	117.6	0.51	0.64		113.1	173.2	169.5	59.5	172.6	337	75	75	71		1.001	5.347	605
6	0.947	0.962		0.16	0.16	1.31	1.07	0.25	73	74	71	1.40	1.93	107	0.012	110	110	117.1	0.50	0.60		114.0	174.3	170.8	59.6	173.6	342	75	75	71		1.001	5.024	574
7	1.105	1.123		0.16	0.16	1.32	1.06	0.25	73	74	71	1.40	1.92	108	0.012	110	111	116.4	0.69	0.66		114.9	175.1	171.4	59.7	174.6	346	76	76	71		1.001	5.508	634
8	1.264	1.283		0.16	0.16	1.31	1.05	0.25	74	74	71	1.40	1.92	108	0.013	106	106	116.0	0.41	0.62		115.4	175.8	172.0	59.9	175.3	350	76	76	71		1.001	5.194	600
9	1.421	1.442		0.16	0.16	1.31	1.06	0.25	74	74	71	1.40	1.92	109	0.010	119	120	115.5	0.50	0.68		116.2	176.8	172.8	59.9	176.1	353	76	76	71		1.001	5.658	658
10	1.580	1.603		0.16	0.16	1.31	1.06	0.25	74	74	71	1.40	1.92	109	0.011	115	116	114.9	0.65	0.64		117.0	177.7	173.7	60.0	177.0	356	76	76	71		1.001	5.347	627
11	1.738	1.763		0.16	0.16	1.32	1.06	0.25	74	74	71	1.40	1.92	110	0.013	106	106	114.3	0.54	0.61		118.0	178.8	174.8	60.0	178.0	357	76	77	71		1.001	5.122	605
12	1.896	1.922		0.16	0.16	1.31	1.06	0.25	74	74	71	1.40	1.90	110	0.012	110	110	113.8	0.54	0.68		119.5	180.3	176.2	60.0	179.5	359	77	77	71		1.001	5.636	674
13	2.054	2.083		0.16	0.16	1.31	1.06	0.25	74	74	71	1.40	1.90	111	0.013	106	107	113.4	0.40	0.58		120.5	181.2	177.3	60.0	180.6	361	77	77	71		1.001	4.858	586
14	2.212	2.242		0.16	0.16	1.34	1.05	0.25	74	75	71	1.40	1.92	111	0.011	115	115	112.7	0.67	0.62		121.9	182.6	178.8	60.0	182.0	362	77	77	71		1.001	5.182	633
15	2.372	2.401		0.16	0.16	1.33	1.05	0.25	74	75	71	1.40	1.93	111	0.015	100	98	112.3	0.38	0.66		123.1	183.7	179.9	60.0	183.1	347	77	77	71		1.001	5.505	679
16	2.531	2.562		0.16	0.16	1.33	1.06	0.25	75	75	71	1.40	1.93	103	0.015	98	99	112.4	-0.04	0.64		124.3	184.8	181.0	59.9	184.2	315	77	77	71		1.001	5.343	665
17	2.691	2.722		0.16	0.16	1.34	1.06	0.25	75	75	71	1.40	1.91	92	0.013	105	104	112.2	0.15	0.62		124.9	185.2	181.4	59.9	184.8	295	77	77	71		1.001	5.184	648
18	2.851	2.883		0.16	0.16	1.33	1.06	0.25	75	75	71	1.40	1.91	88	0.013	105	105	112.2	0.04	0.60		125.3	185.5	181.7	59.8	185.1	282	77	77	71		1.001	5.020	630
19	3.011	3.043		0.16	0.16	1.34	1.06	0.25	75	75	71	1.40	1.90	85	0.014	100	100	112.3	-0.15	0.58		125.6	185.7	181.9	59.8	185.4	271	76	76	71		1.001	4.855	610
20	3.171	3.204		0.16	0.16	1.34	1.06	0.25	75	75	71	1.40	1.90	83	0.015	97	97	112.2	0.16	0.60		125.8	185.9	182.0	59.7	185.5	261	76	76	71		1.001	5.021	632
21	3.331	3.365		0.16	0.16	1.33	1.05	0.25	75	76	72	1.40	1.90	83	0.014	100	100	112.2	0.01	0.64		125.9	185.8	182.0	59.6	185.5	252	76	76	72		1.001	5.346	674
22	3.492	3.525		0.16	0.16	1.33	1.06	0.25	75	76	71	1.40	1.90	82	0.015	97	96	112.2	-0.08	0.51		125.9	185.8	182.4	59.5	185.4	245	76	76	71		1.001	4.209	531
23	3.651	3.687		0.16	0.16	1.33	1.05	0.25	76	76	72	1.40	1.91	82	0.015	96	97	112.3	-0.04	0.54		126.3	186.3	183.0	59.5	185.7	239	76	76	72		1.001	4.524	572
24	3.811	3.846		0.16	0.16	1.33	1.05	0.25	76	76	72	1.40	1.91	81	0.016	93	92	112.1	0.21	0.50		126.5	186.5	183.2	59.5	186.0	233	76	76	72		1.001	4.199	532
25	3.971	4.007		0.16	0.16	1.32	1.05	0.25	76	76	71	1.40	1.90	81	0.013	104	104	112.1	-0.06	0.54		126.6	186.7	183.3	59.5	186.1	227	75	75	71		1.001	4.512	572
26	4.131	4.169		0.16	0.16	1.32	1.05	0.25	76	77	72	1.40	1.92	81	0.015	97	97	112.3	-0.12	0.51		126.9	187.0	183.8	59.6	186.5	222	75	75	72		1.001	4.213	535
27	4.291	4.329		0.16	0.16	1.32	1.05	0.25	76	77	72	1.40	1.90	81	0.015	97	96	112.2	0.10	0.54		127.0	187.0	183.7	59.6	186.6	219	75	75	72		1.001	4.535	576
28	4.451	4.489		0.16	0.16	1.33	1.06	0.25	76	77	71	1.40	1.90	80	0.014	100	99	112.2	-0.04	0.49		126.9	187.1	183.8	59.7	186.5	216	75	75	71		1.001	4.059	516
29	4.611	4.650		0.16	0.16	1.33	1.06	0.25	77	77	71	1.40	1.91	79	0.015	96	96	112.2	0.04	0.53		126.7	186.9	183.6	59.7	186.5	212	75	75	71		1.001	4.376	555
30	4.772	4.812		0.16	0.16	1.33	1.05	0.25	77	77	72	1.40	1.90	79	0.016	94	94	112.3	-0.12	0.52		126.7	186.9	183.7	59.8	186.5	209	75	75	72		1.001	4.372	554
31	4.932	4.972		0.16	0.16	1.33	1.06	0.25	77	77	72	1.40	1.91	79	0.015	96	96	112.2	0.12	0.51		126.5	186.8	183.5	59.9	186.4	205	75	75	72		1.001	4.214	534
32	5.092	5.133		0.16	0.16	1.33	1.05	0.25	77	78	72	1.40	1.92	78	0.014	99	99	112.3	-0.10	0.51		126.3	186.8	183.6	60.0	186.3	201	75	75	72		1.001	4.211	533
33	5.252	5.295		0.16	0.16	1.33	1.05	0.25	77	78	72	1.40	1.90	78	0.015	96	97	112.3	-0.07	0.51		126.0	186.6	183.4	60.2	186.2	198	74	75	72		1.001	4.209	531
34	5.413	5.455		0.16	0.16	1.33	1.05	0.25	77	78	72	1.40	1.91	78	0.013	104	103	112.3	0.07	0.53		125.8	186.5	183.2	60.3	186.0	194	74	74	72		1.001	4.377	551
35	5.573	5.615		0.16	0.16	1.33	1.05	0.25	77	78	72	1.40	1.91	78	0.014	99	99	112.3	-0.01	0.54		125.6	186.3	183.1	60.3	185.9	190	74	74	72		1.001	4.531	570
36	5.733	5.777		0.16	0.16	1.32	1.06	0.25	78	78	72	1.40	1.90	78	0.015	96	97	112.2	0.06	0.52		125.3	186.1	182.9	60.4	185.7	187	74	74	72		1.001	4.374	549
37	5.894	5.938		0.16	0.16	1.33	1.05	0.25	78	78	72	1.40	1.90	78	0.016	93	93	112.2	-0.01	0.51		125.1	186.1	182.9	60.5	185.7	184	74	74	72		1.001	4.212	528
38	6.055	6.099		0.16	0.16	1.32	1.05	0.25	78	78	72	1.40	1.91	78	0.014	100	99	112.2	0.04	0.49		124.9	185.9	182.9	60.6	185.5	181	74	74	72		1.001	4.051	507
39	6.215	6.260		0.16	0.16	1.32	1.06	0.25	78	78	72	1.40	1.91	78	0.015	96	96	112.2	-0.04	0.49		124.7	185.8	182.6	60.7	185.4	178	74	74	72		1.001	4.053	506
40	6.376	6.422		0.16	0.16	1.33	1.05	0.25	78	78	72	1.40	1.90	78	0.014	100	100	112.2	0.00	0.58		124.3	185.5	182.0	60.8	185.0	175	74	74	72		1.001	4.833	601
41	6.537	6.582		0.16	0.16	1.33	1.05	0.25	78	79	71	1.40	1.90	78	0.016	93	92	112.2	0.07	0.57		124.2	185.4	181.8	60.8	185.0	172	74	74	71		1.001	4.759	592
42	6.697	6.743		0.16	0.16	1.33	1.05	0.25	78	79	72	1.40	1.90	78	0.014	99	99	112.2	0.01	0.56		124.0	185.1	181.6	60.8	184.8	169	74	74	72		1.001	4.700	583
43	6.857	6.904		0.16	0.16	1.33	1.06	0.25	79	79	71	1.40	1.91	78	0.013	103	103	112.3	-0.18	0.54		123.7	184.8	181.2	60.8	184.5	167	74	74	71		1.001	4.524	560
44	7.018	7.066		0.16	0.16	1.32	1.06	0.25	79	79	72	1.40	1.91	78	0.014	100	100	112.2	0.18	0.53		123.5	184.4	180.8	60.7	184.2	164	74	74	72		1.001	4.375	541
45	7.179	7.227		0.16	0.16	1.32	1.05	0.25	79	79	71	1.40	1.90	78	0.015	96	96	112.3	-0.15	0.54		123.1	184.0	180.5	60.7	183.8	161	73	74	71		1.001	4.532	559
46	7.339	7.388		0.16	0.16	1.32	1.06	0.25	79	79	72	1.40	1.90	78	0.014	99	99	112.1	0.21	0.56		122.7	183.6	180.1	60.7	183.4	159	73	74	72		1.001	4.696	577
47	7.500	7.550		0.16	0.16	1.32	1.05	0.25	79	79	72	1.40	1.91	78	0.016	93	93	112.2	-0.11	0.53		122.4	183.4	179.8	60.7	183.1	157	73	74	72		1.001	4.377	536
48	7.660	7.711		0.16	0.16	1.32	1.05	0.25	79	79	72	1.40	1.90	78	0.015	96	96	112.2	-0.03	0.54		122.1	183.2	179.7	60.7	182.8	155	73	73	72		1.001	4.534	554
49	7.821	7.872		0.16	0.16	1.32	1.06	0.25	79	79	72	1.40	1.90	78	0.015	96	96	112.2	0.01	0.53		122.0	183.1	179.6	60.7	182.7	152	73	73	72		1.001	4.376	534
50	7.981	8.033		0.16	0.16	1.32	1.06	0.25	79	80	72	1.40	1.91	78	0.015	96	96	112.3	-0.01	0.54		121.8	182.8	179.4	60.7	182.5	150	73	73	72		1.001	4.536	553
51	8.142	8.195		0.16	0.16	1.32	1.06	0.25	79	80	72	1.40	1.90	78	0.014	100	100	112.3	-0.04	0.58		121.5	182.6	179.3	60.8	182.3	148	73	73	72		1.001	4.856	591
52	8.303	8.356		0.16	0.16	1.32	1.05	0.25	79	80	72	1.40	1.90	78	0.016	93	93	112.2	0.13	0.54		121.3	182.5	179.0	60.8	182.1	146	73	73	72		1.001	4.534	551

Elapsed Time	Particulate Sampling Data																	Fuel Weight, lb		Flow, gpm		Temperature Data, oF									Stack			
	Gas Meter Cubic Feet (1)	Gas Meter Cubic Feet (2)	Gas Meter Cubic Feet (amb)	Sample Rate, cfm (1)	Sample Rate, cfm (2)	Orifice dH (1)	Orifice dH (2)	Orifice dH (amb)	Meter oF (1)	Meter oF (2)	Meter oF (amb)	Meter Vac. in. Hg. (1)	Meter Vac. in. Hg. (2)	Dilution Tunnel Temp.	Dilution Tunnel dP	Pro. Rate (%) (1)	Pro. Rate (%) (2)	Scale Reading	Weight Change	Load Side Liquid Flow Rate	Boiler Side Liquid Flow Rate (optional)	Thermopile ΔT	Boiler to Heat Exch. Temp.	Heat Exch to Boiler Temp.	Inlet Load Temp.	Outlet Load Temp.	Stack	Filter (1)	Filter (2)	Ambient		Specific Heat of Inlet Water (BTU/lb-°F)	Mass Flow Rate of Inlet Water (lb/min)	Heat Output, Btu
53	8.464	8.517		0.16	0.16	1.32	1.06	0.25	80	80	72	1.40	1.90	77	0.014	99	99	112.3	-0.13	0.54		121.0	182.2	178.9	60.9	181.9	144	73	73	72		1.001	4.531	549
54	8.624	8.679		0.16	0.16	1.32	1.06	0.25	80	80	72	1.40	1.90	78	0.014	99	100	112.1	0.19	0.55		120.8	182.1	178.7	61.0	181.8	143	73	73	72		1.001	4.541	549
55	8.785	8.840		0.16	0.16	1.32	1.06	0.25	80	80	72	1.40	1.91	77	0.015	96	96	112.3	-0.19	0.56		120.4	181.8	178.5	61.0	181.4	141	73	73	72		1.001	4.696	566
56	8.946	9.001		0.16	0.16	1.33	1.06	0.25	80	80	71	1.40	1.90	77	0.013	103	103	112.3	-0.02	0.56		120.1	181.6	178.3	61.1	181.2	140	73	73	71		1.001	4.668	561
57	9.107	9.163		0.16	0.16	1.33	1.06	0.25	80	80	71	1.40	1.90	78	0.014	100	100	112.2	0.11	0.52		120.0	181.4	178.1	61.1	181.1	148	73	73	71		1.001	4.372	525
58	9.268	9.325		0.16	0.16	1.33	1.06	0.25	80	80	72	1.40	1.90	78	0.014	100	100	111.9	0.31	0.54		119.8	181.2	178.0	61.1	180.9	191	73	73	72		1.001	4.535	544
59	9.428	9.486		0.16	0.16	1.33	1.04	0.25	80	80	72	1.40	1.92	86	0.013	103	104	112.0	-0.05	0.53		119.6	181.1	177.9	61.1	180.8	185	73	73	72		1.001	4.376	524
60	9.589	9.647		0.16	0.16	1.33	1.06	0.25	80	80	71	1.40	1.89	82	0.014	100	99	111.8	0.14	0.56		119.5	180.9	177.7	61.1	180.6	169	73	73	71		1.001	4.701	563
61	9.750	9.808		0.16	0.16	1.33	1.06	0.25	80	80	72	1.40	1.90	79	0.015	96	96	111.9	-0.04	0.54		119.3	180.9	177.6	61.1	180.4	159	73	73	72		1.001	4.533	542
62	9.911	9.970		0.16	0.16	1.32	1.06	0.25	80	80	72	1.40	1.91	78	0.014	100	100	111.9	-0.08	0.54		119.2	180.7	177.6	61.2	180.3	153	73	73	72		1.001	4.538	541
63	10.072	10.131		0.16	0.16	1.33	1.06	0.25	80	80	72	1.40	1.91	78	0.014	100	99	112.0	-0.02	0.56		118.9	180.4	177.3	61.2	180.1	148	73	73	72		1.001	4.699	559
64	10.233	10.292		0.16	0.16	1.33	1.06	0.25	80	81	72	1.40	1.91	78	0.015	96	96	112.0	-0.05	0.54		118.8	180.3	177.1	61.2	180.0	145	73	73	72		1.001	4.537	540
65	10.394	10.454		0.16	0.16	1.33	1.06	0.25	81	81	72	1.40	1.90	78	0.016	93	93	111.8	0.15	0.56		118.6	180.2	176.9	61.2	179.8	143	73	73	72		1.001	4.697	558
66	10.556	10.616		0.16	0.16	1.40	1.06	0.25	81	81	72	1.40	1.75	78	0.013	104	103	111.8	0.03	0.56		118.3	179.9	176.7	61.2	179.5	140	73	73	72		1.001	4.694	556
67	10.718	10.777		0.16	0.16	1.32	1.05	0.25	81	81	72	1.40	1.91	77	0.015	96	95	111.9	-0.04	0.54		118.2	179.7	176.5	61.2	179.4	138	74	73	72		1.001	4.532	536
68	10.879	10.939		0.16	0.16	1.33	1.06	0.25	81	81	72	1.40	1.89	77	0.015	96	96	111.9	0.00	0.56		118.0	179.6	176.3	61.1	179.2	136	74	73	72		1.001	4.696	555
69	11.040	11.100		0.16	0.16	1.33	1.06	0.25	81	81	72	1.40	1.91	77	0.014	99	99	111.9	-0.08	0.52		117.9	179.3	176.1	61.1	178.9	134	74	73	72		1.001	4.373	516
70	11.201	11.263		0.16	0.16	1.33	1.06	0.25	81	81	72	1.40	1.91	77	0.015	96	97	111.8	0.13	0.56		117.7	179.0	175.8	61.1	178.8	133	74	73	72		1.001	4.697	554
71	11.363	11.424		0.16	0.16	1.33	1.06	0.25	81	81	72	1.40	1.90	77	0.015	96	95	111.8	0.00	0.56		117.5	178.9	175.6	61.0	178.5	131	74	73	72		1.001	4.696	553
72	11.524	11.585		0.16	0.16	1.33	1.06	0.25	81	81	72	1.40	1.89	77	0.014	99	99	111.9	-0.14	0.54		117.4	178.6	175.4	61.0	178.3	130	74	73	72		1.001	4.531	532
73	11.685	11.747		0.16	0.16	1.33	1.06	0.25	81	81	72	1.40	1.90	78	0.015	96	96	111.9	0.01	0.58		117.2	178.5	175.3	60.9	178.1	128	74	73	72		1.001	4.858	570
74	11.846	11.909		0.16	0.16	1.33	1.06	0.25	81	81	72	1.40	1.91	77	0.016	93	93	111.9	0.03	0.54		117.0	178.2	175.1	60.9	177.9	127	74	73	72		1.001	4.537	531
75	12.007	12.071		0.16	0.16	1.33	1.06	0.25	81	81	72	1.40	1.89	77	0.014	99	99	111.9	0.00	0.54		116.8	178.0	174.8	60.9	177.7	126	74	73	72		1.001	4.534	530
76	12.169	12.232		0.16	0.16	1.33	1.06	0.25	81	81	72	1.40	1.91	77	0.014	100	99	112.0	-0.11	0.54		116.6	177.8	174.6	60.9	177.5	124	74	73	72		1.001	4.533	529
77	12.330	12.394		0.16	0.16	1.33	1.06	0.25	81	81	72	1.40	1.91	77	0.014	99	99	111.9	0.06	0.56		116.4	177.7	174.4	60.9	177.3	123	74	73	72		1.001	4.694	547
78	12.491	12.556		0.16	0.16	1.32	1.06	0.25	81	81	72	1.40	1.89	77	0.015	96	96	112.0	-0.03	0.53		116.1	177.3	174.1	60.9	177.1	122	74	73	72		1.001	4.374	508
79	12.652	12.718		0.16	0.16	1.33	1.06	0.25	81	81	72	1.40	1.90	77	0.014	99	99	111.8	0.12	0.54		115.8	177.1	173.9	60.9	176.8	121	73	73	72		1.001	4.533	526
80	12.813	12.879		0.16	0.16	1.33	1.06	0.25	81	81	72	1.40	1.91	77	0.015	96	95	111.8	0.04	0.54		115.5	176.7	173.6	61.0	176.4	120	73	73	72		1.001	4.537	524
81	12.974	13.041		0.16	0.16	1.32	1.05	0.25	81	81	72	1.40	1.91	77	0.014	99	99	111.9	-0.09	0.54		115.3	176.6	173.5	61.0	176.3	119	73	73	72		1.001	4.536	524
82	13.135	13.203		0.16	0.16	1.32	1.05	0.25	81	81	72	1.40	1.90	77	0.015	96	96	112.0	-0.13	0.53		115.0	176.3	173.2	61.0	176.0	118	73	73	72		1.001	4.374	504
83	13.297	13.364		0.16	0.16	1.32	1.06	0.25	81	81	72	1.40	1.91	77	0.013	104	103	111.9	0.12	0.56		114.8	176.2	173.1	61.0	175.8	117	73	73	72		1.001	4.697	540
84	13.458	13.526		0.16	0.16	1.32	1.06	0.25	81	82	72	1.40	1.91	77	0.013	103	103	112.0	-0.06	0.53		114.6	176.0	172.9	61.1	175.7	116	73	73	72		1.001	4.374	502
85	13.619	13.688		0.16	0.16	1.32	1.06	0.25	82	82	72	1.40	1.89	77	0.015	96	96	112.1	-0.12	0.54		114.2	175.7	172.6	61.1	175.3	115	73	73	72		1.001	4.536	519
86	13.780	13.850		0.16	0.16	1.33	1.06	0.25	82	82	72	1.40	1.89	77	0.014	99	99	111.9	0.21	0.54		114.0	175.4	172.4	61.1	175.1	114	73	73	72		1.001	4.535	518
87	13.941	14.011		0.16	0.16	1.33	1.06	0.25	82	82	72	1.40	1.90	77	0.016	93	92	112.0	-0.17	0.59		113.9	175.3	172.3	61.1	175.0	113	73	73	72		1.001	4.937	563
88	14.103	14.173		0.16	0.16	1.32	1.06	0.25	82	82	72	1.40	1.90	77	0.014	100	99	111.9	0.17	0.54		113.6	175.0	172.0	61.1	174.7	113	73	73	72		1.001	4.536	516
89	14.264	14.336		0.16	0.16	1.32	1.06	0.25	82	82	72	1.40	1.91	77	0.014	99	100	111.7	0.13	0.52		113.3	174.7	171.7	61.2	174.4	150	73	73	72		1.001	4.370	496
90	14.425	14.497		0.16	0.16	1.31	1.05	0.25	82	82	72	1.40	1.91	82	0.015	96	96	111.6	0.15	0.56		113.0	174.6	171.6	61.2	174.2	179	73	73	72		1.001	4.694	531
91	14.586	14.658		0.16	0.16	1.32	1.06	0.25	82	82	72	1.40	1.90	86	0.016	93	93	111.5	0.06	0.54		112.8	174.4	171.4	61.3	174.1	157	73	73	72		1.001	4.538	512
92	14.747	14.820		0.16	0.16	1.32	1.06	0.25	82	82	72	1.40	1.91	79	0.015	96	96	111.5	0.05	0.56		112.5	174.2	171.3	61.4	173.8	144	73	73	72		1.001	4.699	529
93	14.909	14.982		0.16	0.16	1.32	1.06	0.25	82	82	72	1.40	1.91	78	0.014	100	99	111.4	0.11	0.56		112.4	174.1	171.0	61.4	173.8	136	73	73	72		1.001	4.697	529
94	15.070	15.144		0.16	0.16	1.32	1.05	0.25	82	82	72	1.40	1.91	78	0.014	99	99	111.6	-0.24	0.56		112.1	173.9	170.8	61.4	173.6	131	73	73	72		1.001	4.696	527
95	15.231	15.305		0.16	0.16	1.33	1.06	0.25	82	82	72	1.40	1.91	78	0.014	99	99	111.4	0.17	0.56		111.9	173.6	170.6	61.5	173.3	128	73	73	72		1.001	4.694	526
96	15.392	15.467		0.16	0.16	1.32	1.06	0.25	82	82	72	1.40	1.90	78	0.013	103	103	111.5	-0.05	0.68		111.6	173.2	169.6	61.5	173.1	125	73	73	72		1.001	5.670	634
97	15.554	15.630		0.16	0.16	1.33	1.06	0.25	82	82	72	1.40	1.92	78	0.012	108	108	111.4	0.06	0.72		111.1	172.8	168.9	61.5	172.5	123	73	73	72		1.001	5.990	666
98	15.715	15.791		0.16	0.16	1.32	1.06	0.25	82	82	72	1.40	1.90	77	0.013	103	102	111.4	-0.01	0.70		110.9	172.4	168.6	61.3	172.2	122	73	73	72		1.001	5.829	647
99	15.876	15.953		0.16	0.16	1.32	1.06	0.25	82	82	72	1.40	1.92	77	0.014	99	99	111.5	-0.03	0.64		110.6	172.1	168.3	61.2	171.8	120	73	73	72		1.001	5.337	591
100	16.037	16.114		0.16	0.16	1.32	1.06	0.25	82	82	72	1.40	1.90	78	0.013	103	102	111.3	0.12	0.64		110.6	171.8	168.1	61.1	171.6	119	73	73	72		1.001	5.344	592
101	16.199	16.277		0.16	0.16	1.32	1.06	0.25	82	82	72	1.40	1.91	78	0.014	100	100	111.5	-0.20	0.70		110.4	171.6	167.9	61.0	171.4	117	73	73	72		1.001	5.832	644
102	16.360	16.439		0.16	0.16	1.33	1.05	0.25	82	82	72	1.40	1.91	78	0.014	99	99	111.5	0.04	0.66		110.2	171.3	167.7	61.0	171.1	117	73	73	72		1.001	5.507	607
103	16.521	16.600		0.16	0.16	1.33	1.06	0.25	82	82	71	1.40	1.91	78	0.014	99	99	111.5	-0.04	0.65		109.9	170.9	167.3	60.9	170.8	115	73	73	71		1.001	5.439	598
104	16.683	16.762		0.16	0.16	1.32	1.06	0.25	82	82	71	1.40	1.91	79	0.014	100	99	111.4	0.11	0.68		109.7	170.7	167.1	60.8	170.5	115	73	73	71		1.001	5.672	623
105	16.844	16.925		0.16	0.16	1.33	1.06	0.25	82	82	71	1.40	1.91	79	0.014	99	100	111.4	-0.02	0.66		109.4	170.3	166.7	60.8	170.1	113	73	73	71		1.001	5.507	603
106	17.005	17.087		0.16	0.16	1.33	1.06	0.25	82	82	71	1.40	1.91	78	0.014	99	99	111.4	0.00	0.66		109.1	170.1	166.4	60.8	169.9	112	73	73	71		1.001	5.506	602
107	17.167	17.248		0.16	0.16	1.33	1.06	0.25	82	82	71	1.40	1.91	78	0.014	100	99	111.5	-0.10	0.66		109.0	169.8	166.1	60.7	169.6	112	73	73	71		1.001	5.505	601
108	17.329	17.410		0.16	0.16	1.33	1.06	0.25	82	82	71	1.40	1.91	78	0.014	100	99	111.3	0.23	0.64		108.8	169.5	165.9	60.5	169.3	110	73	73	71		1.001	5.341	582
109	17.490	17.573		0.16	0.16	1.33	1.06	0.25	82	82	72	1.40	1.91	78	0.014	99	100	111.5	-0.24	0.68		108.6	169.3	165.6	60.4	169.1	110	73	73	72		1.001	5.670	617
110	17.652	17.734		0.16	0.16	1.33	1.06	0.25	82	82	72	1.40	1.91	78	0.015	96	95	111.4	0.17	0.56		108.5	169.1	166.1	60.3	168.8	109	73	73	72		1.001	4.698	510
111	17.813	17.896		0.16	0.16	1.33	1.06	0.25	82	82	72	1.40	1.90	78	0.014	99	99	111.5	-0.09	0.58		108.5	169.0	166.2	60.3	168.8	108	73	73	72		1.001	4.856	527
112	17.975	18.058		0.16	0.16	1.33	1.06	0.25	82	82	72	1.40	1.90	78	0.016	93	93	111.4	0.07	0.56		108.3	168.8	166.0	60.3	168.6	107	73	73	72		1.001	4.697	509
113	18.136	18.220		0.16	0.16	1.33	1.06	0.25	82	82	71	1.40	1.90	78	0.015	96	96	111.3	0.05	0.53		108.2	168.6	165.9	60.3	168.5	107	73	73	71		1.001	4.375	474
114	18.298	18.382		0.16	0.16	1.33	1.06	0.25	82	82	72	1.40	1.90	78	0.015	96	96	111.4	-0.06	0.54		107.9	168.3	165.6	60.4	168.2	106	73	73	72		1.001	4.538	490

Elapsed Time	Particulate Sampling Data																	Fuel Weight, lb		Flow, gpm		Temperature Data, oF									Stack			
	Gas Meter Cubic Feet (1)	Gas Meter Cubic Feet (2)	Gas Meter Cubic Feet (amb)	Sample Rate, cfm (1)	Sample Rate, cfm (2)	Orifice dH (1)	Orifice dH (2)	Orifice dH (amb)	Meter oF (1)	Meter oF (2)	Meter oF (amb)	Meter Vac. in. Hg. (1)	Meter Vac. in. Hg. (2)	Dilution Tunnel Temp.	Dilution Tunnel dP	Pro. Rate (%) (1)	Pro. Rate (%) (2)	Scale Reading	Weight Change	Load Side Liquid Flow Rate	Boiler Side Liquid Flow Rate (optional)	Thermopile ΔT	Boiler to Heat Exch. Temp.	Heat Exch to Boiler Temp.	Inlet Load Temp.	Outlet Load Temp.	Stack	Filter (1)	Filter (2)	Ambient		Specific Heat of Inlet Water (BTU/lb-°F)	Mass Flow Rate of Inlet Water (lb/min)	Heat Output, Btu
115	18.459	18.544		0.16	0.16	1.33	1.06	0.25	82	82	72	1.40	1.92	78	0.013	103	103	111.5	-0.11	0.54		107.6	168.1	165.4	60.4	168.0	105	73	73	72		1.001	4.536	489
116	18.621	18.706		0.16	0.16	1.33	1.06	0.25	82	82	72	1.40	1.91	78	0.015	96	96	111.4	0.10	0.56		107.3	168.0	165.2	60.5	167.8	105	73	73	72		1.001	4.697	505
117	18.782	18.868		0.16	0.16	1.33	1.06	0.25	82	82	72	1.40	1.90	78	0.014	99	99	111.4	0.05	0.57		107.0	167.8	165.0	60.5	167.6	105	73	73	72		1.001	4.715	505
118	18.944	19.030		0.16	0.16	1.33	1.05	0.25	82	82	72	1.40	1.90	78	0.014	100	99	111.5	-0.19	0.56		106.7	167.5	164.7	60.6	167.3	104	73	73	72		1.001	4.695	501
119	19.105	19.191		0.16	0.16	1.33	1.06	0.25	82	82	72	1.40	1.91	78	0.015	96	95	111.5	0.08	0.54		106.4	167.2	164.5	60.7	167.1	103	73	73	72		1.001	4.534	483
120	19.267	19.353		0.16	0.16	1.32	1.06	0.25	82	82	72	1.40	1.92	78	0.015	96	96	111.5	0.00	0.54		106.2	167.0	164.4	60.7	166.9	104	73	73	72		1.001	4.532	482
121	19.428	19.516		0.16	0.16	1.33	1.06	0.25	82	82	72	1.40	1.91	78	0.013	103	104	111.2	0.26	0.54		105.8	166.7	164.1	60.8	166.6	148	73	73	72		1.001	4.535	480
122	19.590	19.677		0.16	0.16	1.32	1.05	0.25	82	82	72	1.40	1.92	83	0.015	97	96	111.2	0.03	0.56		105.6	166.5	163.9	60.8	166.4	152	73	73	72		1.001	4.696	497
123	19.751	19.838		0.16	0.16	1.33	1.06	0.25	82	82	72	1.40	1.90	81	0.013	103	103	111.1	0.11	0.56		105.3	166.4	163.7	60.9	166.1	136	73	73	72		1.001	4.697	495
124	19.913	20.000		0.16	0.16	1.33	1.06	0.25	82	82	72	1.40	1.91	79	0.015	96	96	111.2	-0.12	0.58		105.1	166.2	163.5	60.9	166.0	127	73	73	72		1.001	4.856	511
125	20.074	20.163		0.16	0.16	1.33	1.06	0.25	82	82	72	1.40	1.92	78	0.016	93	93	111.0	0.21	0.56		104.9	165.9	163.3	60.9	165.8	121	73	73	72		1.001	4.696	493
126	20.236	20.325		0.16	0.16	1.33	1.06	0.25	82	82	72	1.40	1.90	78	0.015	96	96	111.0	-0.05	0.56		104.6	165.7	163.1	61.0	165.6	118	73	73	72		1.001	4.697	492
127	20.398	20.486		0.16	0.16	1.33	1.06	0.25	82	82	72	1.40	1.90	78	0.013	104	102	111.1	-0.12	0.54		104.4	165.6	162.9	61.0	165.4	115	73	73	72		1.001	4.530	474
128	20.559	20.648		0.16	0.16	1.33	1.06	0.25	82	82	72	1.40	1.91	78	0.015	96	96	110.9	0.26	0.56		104.2	165.4	162.7	60.9	165.2	113	73	73	72		1.001	4.691	489
129	20.721	20.811		0.16	0.16	1.33	1.06	0.25	82	82	72	1.40	1.92	78	0.016	93	93	111.1	-0.22	0.54		104.0	165.2	162.5	60.9	164.9	111	73	73	72		1.001	4.535	472
130	20.882	20.973		0.16	0.16	1.33	1.06	0.25	82	83	72	1.40	1.91	78	0.014	99	99	110.9	0.18	0.55		103.9	165.0	162.3	60.9	164.8	110	73	73	72		1.001	4.574	476
131	21.044	21.134		0.16	0.16	1.33	1.06	0.25	83	83	72	1.40	1.90	78	0.014	100	99	111.1	-0.23	0.56		103.7	164.7	162.1	60.9	164.6	109	73	73	72		1.001	4.696	488
132	21.205	21.296		0.16	0.16	1.33	1.06	0.25	83	83	72	1.40	1.91	77	0.014	99	99	110.9	0.22	0.56		103.5	164.5	161.9	60.8	164.3	108	73	73	72		1.001	4.694	486
133	21.367	21.459		0.16	0.16	1.32	1.06	0.25	83	83	72	1.40	1.92	77	0.017	90	90	111.1	-0.17	0.49		103.4	164.3	161.9	60.8	164.2	107	73	73	72		1.001	4.049	419
134	21.529	21.621		0.16	0.16	1.33	1.06	0.25	83	83	72	1.40	1.91	78	0.015	96	96	111.0	0.05	0.56		103.2	164.1	161.5	60.7	163.9	106	73	73	72		1.001	4.696	485
135	21.690	21.782		0.16	0.16	1.33	1.06	0.25	83	83	72	1.40	1.91	78	0.014	99	99	111.0	0.05	0.51		103.0	163.9	161.2	60.7	163.7	105	73	73	72		1.001	4.213	435
136	21.852	21.944		0.16	0.16	1.33	1.06	0.25	83	83	72	1.40	1.91	78	0.015	96	96	111.1	-0.06	0.54		102.8	163.6	161.0	60.7	163.4	104	73	73	72		1.001	4.530	466
137	22.014	22.107		0.16	0.16	1.33	1.06	0.25	83	83	72	1.40	1.91	78	0.015	96	96	111.1	-0.05	0.56		102.6	163.4	160.8	60.6	163.2	103	73	73	72		1.001	4.701	483
138	22.175	22.269		0.16	0.16	1.33	1.06	0.25	83	83	72	1.40	1.91	77	0.014	99	99	111.0	0.12	0.54		102.4	163.2	160.6	60.6	163.0	103	73	73	72		1.001	4.532	465
139	22.337	22.431		0.16	0.16	1.32	1.06	0.25	83	83	72	1.40	1.91	78	0.016	93	93	111.1	-0.10	0.54		102.2	163.0	160.4	60.6	162.8	102	73	73	72		1.001	4.536	464
140	22.498	22.592		0.16	0.16	1.33	1.06	0.25	83	83	72	1.40	1.91	78	0.016	93	92	111.0	0.05	0.54		102.0	162.8	160.3	60.6	162.7	102	73	73	72		1.001	4.536	463
141	22.660	22.755		0.16	0.16	1.33	1.06	0.25	83	83	72	1.40	1.91	77	0.015	96	96	111.0	0.06	0.60		101.7	162.5	160.0	60.7	162.4	101	73	73	72		1.001	5.022	511
142	22.822	22.917		0.16	0.16	1.33	1.06	0.25	83	83	72	1.40	1.90	78	0.015	96	96	111.1	-0.15	0.45		101.3	162.3	159.7	60.8	162.1	101	73	73	72		1.001	3.729	378
143	22.983	23.079		0.16	0.16	1.33	1.06	0.25	83	83	72	1.40	1.92	78	0.013	103	103	110.9	0.22	0.68		101.0	161.9	158.5	60.9	161.8	100	73	73	72		1.001	5.673	573
144	23.145	23.240		0.16	0.16	1.33	1.06	0.25	83	83	72	1.40	1.90	77	0.015	96	95	110.7	0.19	0.70		100.4	161.4	158.0	60.9	161.3	142	73	73	72		1.001	5.827	586
145	23.307	23.402		0.16	0.16	1.33	1.06	0.25	83	83	72	1.40	1.92	82	0.015	97	96	110.4	0.28	0.66		100.2	161.1	157.7	60.8	160.9	178	73	73	72		1.001	5.495	551
146	23.468	23.564		0.16	0.16	1.33	1.06	0.25	83	83	72	1.40	1.93	87	0.015	96	97	109.9	0.52	0.73		99.8	160.7	157.2	60.7	160.5	218	73	73	72		1.001	6.064	608
147	23.629	23.725		0.16	0.16	1.33	1.05	0.25	83	83	72	1.40	1.92	91	0.016	94	93	109.4	0.56	0.66		100.0	160.9	157.5	60.7	160.7	251	73	73	72		1.001	5.499	550
148	23.791	23.887		0.16	0.16	1.33	1.05	0.25	83	83	72	1.40	1.93	94	0.015	98	97	108.7	0.62	0.72		100.4	161.7	158.1	60.7	161.1	278	74	74	72		1.001	5.989	602
149	23.952	24.048		0.16	0.16	1.33	1.06	0.25	83	83	72	1.40	1.92	97	0.014	101	100	108.3	0.47	0.74		101.5	162.6	159.0	60.6	162.1	298	74	74	72		1.001	6.155	626
150	24.113	24.210		0.16	0.16	1.33	1.06	0.25	83	83	72	1.40	1.94	100	0.014	101	101	107.8	0.49	0.68		102.4	163.4	159.8	60.5	162.9	312	74	74	72		1.001	5.665	581
151	24.274	24.370		0.16	0.16	1.33	1.06	0.25	83	83	72	1.40	1.93	103	0.015	98	97	107.1	0.67	0.70		103.6	164.4	160.9	60.3	164.0	323	74	75	72		1.001	5.826	604
152	24.435	24.531		0.16	0.16	1.33	1.06	0.25	83	83	72	1.40	1.93	105	0.014	101	101	106.5	0.59	0.68		104.5	165.1	161.5	60.2	164.7	331	75	75	72		1.001	5.665	593
153	24.596	24.693		0.16	0.16	1.33	1.06	0.25	83	83	72	1.40	1.93	106	0.015	98	98	105.9	0.65	0.70		105.3	166.0	162.2	60.0	165.4	337	75	75	72		1.001	5.826	614
154	24.757	24.853		0.16	0.16	1.33	1.06	0.25	83	83	72	1.40	1.92	107	0.016	95	94	105.4	0.45	0.68		106.1	166.5	162.7	59.9	166.0	342	75	75	72		1.001	5.667	602
155	24.917	25.014		0.16	0.16	1.33	1.06	0.25	83	83	72	1.40	1.93	108	0.014	101	101	105.0	0.45	0.72		107.1	167.5	163.7	59.9	167.0	347	76	76	72		1.001	5.991	643
156	25.078	25.176		0.16	0.16	1.33	1.05	0.25	83	83	72	1.40	1.94	109	0.016	95	95	104.2	0.82	0.64		108.3	168.7	164.8	59.8	168.1	353	76	76	72		1.001	5.346	579
157	25.239	25.336		0.16	0.16	1.33	1.05	0.25	83	83	72	1.40	1.93	110	0.016	95	94	103.6	0.54	0.66		109.5	169.7	165.9	59.7	169.2	356	76	76	72		1.001	5.504	603
158	25.400	25.496		0.16	0.16	1.33	1.05	0.25	83	83	72	1.40	1.94	111	0.014	102	101	102.9	0.69	0.70		110.6	170.8	166.9	59.6	170.2	356	76	77	72		1.001	5.826	645
159	25.561	25.657		0.16	0.16	1.33	1.05	0.25	83	83	72	1.40	1.93	110	0.015	98	98	102.6	0.29	0.68		111.6	171.8	167.8	59.5	171.2	357	77	77	72		1.001	5.667	633
160	25.722	25.818		0.16	0.16	1.33	1.05	0.25	83	83	72	1.40	1.94	111	0.014	102	101	101.9	0.71	0.68		113.0	173.1	169.0	59.5	172.5	360	77	77	72		1.001	5.666	641
161	25.882	25.978		0.16	0.16	1.33	1.05	0.25	83	83	72	1.40	1.95	112	0.015	98	98	101.7	0.22	0.70		114.2	174.1	170.1	59.3	173.6	362	77	77	72		1.001	5.797	663
162	26.043	26.139		0.16	0.16	1.33	1.05	0.25	83	83	72	1.40	1.95	112	0.015	99	98	101.3	0.40	0.70		115.5	175.3	171.2	59.3	174.8	364	77	77	72		1.001	5.829	674
163	26.204	26.300		0.16	0.16	1.33	1.05	0.25	83	83	72	1.40	1.94	113	0.014	102	102	100.3	0.97	0.70		116.6	176.5	172.3	59.2	175.8	366	78	78	72		1.001	5.824	680
164	26.365	26.460		0.16	0.16	1.33	1.05	0.25	83	83	72	1.40	1.96	113	0.015	99	98	100.0	0.37	0.66		117.9	177.8	173.5	59.1	177.0	367	78	78	72		1.001	5.506	650
165	26.526	26.620		0.16	0.16	1.33	1.05	0.25	83	83	72	1.40	1.95	113	0.014	102	101	99.2	0.81	0.70		119.1	178.8	174.5	59.1	178.2	366	78	78	72		1.001	5.827	695
166	26.687	26.781		0.16	0.16	1.33	1.04	0.25	83	83	72	1.40	1.96	113	0.015	99	98	98.9	0.27	0.70		120.2	180.0	175.6	59.1	179.3	368	78	78	72		1.001	5.825	701
167	26.848	26.941		0.16	0.16	1.32	1.04	0.25	83	83	72	1.40	1.94	114	0.013	106	105	98.4	0.46	0.74		121.4	181.1	176.8	59.1	180.5	372	78	78	72		1.001	6.151	747
168	27.009	27.101		0.16	0.16	1.32	1.04	0.25	83	83	72	1.40	1.96	114	0.016	96	95	97.6	0.80	0.68		122.5	182.3	178.0	59.2	181.6	372	79	78	72		1.001	5.669	695
169	27.169	27.262		0.16	0.16	1.32	1.04	0.25	83	83	72	1.40	1.96	114	0.015	98	98	97.4	0.22	0.66		123.4	183.3	178.8	59.3	182.7	347	79	79	72		1.001	5.505	680
170	27.330	27.422		0.16	0.16	1.33	1.05	0.25	83	83	71	1.40	1.93	101	0.016	95	94	97.4	0.02	0.68		124.4	184.4	179.9	59.4	183.8	317	78	78	71		1.001	5.666	706
171	27.491	27.582		0.16	0.16	1.32	1.05	0.25	83	83	72	1.40	1.94	92	0.015	97	96	97.1	0.33	0.68		125.0	184.9	180.5	59.5	184.4	299	78	78	72		1.001	5.667	709
172	27.652	27.743		0.16	0.16	1.33	1.05	0.25	83	83	72	1.40	1.92	88	0.014	100	99	96.9	0.22	0.70		125.1	185.1	180.6	59.6	184.7	285	78	78	72		1.001	5.818	729
173	27.813	27.905		0.16	0.16	1.33	1.05	0.25	83	83	72	1.40	1.93	85	0.015	96	96	96.9	-0.03	0.73		125.3	185.3	180.8	59.6	184.9	274	78	77	72		1.001	6.065	763
174	27.975	28.066		0.16	0.16	1.33	1.05	0.25	83	83	72	1.40	1.94	84	0.015	97	96	96.8	0.07	0.70		125.3	185.5	180.9	59.7	185.0	264	77	77	72		1.001	5.825	731
175	28.136	28.228		0.16	0.16	1.33	1.05	0.25	83	83	72	1.40	1.94	83	0.015	96	96	96.9	-0.05	0.64		125.5	185.7	181.2	59.7	185.3	256	77	77	72		1.001	5.343	671
176	28.297	28.389		0.16	0.16	1.31	1.06	0.25	83	83	72	1.40	1.93	83	0.015	96	96	96.8	0.07	0.68		125.5	185.6	181.2	59.8	185.3	248	77	77	72		1.001	5.668	712

Elapsed Time	Particulate Sampling Data																	Fuel Weight, lb		Flow, gpm		Temperature Data, oF									Stack			
	Gas Meter Cubic Feet (1)	Gas Meter Cubic Feet (2)	Gas Meter Cubic Feet (amb)	Sample Rate, cfm (1)	Sample Rate, cfm (2)	Orifice dH (1)	Orifice dH (2)	Orifice dH (amb)	Meter oF (1)	Meter oF (2)	Meter oF (amb)	Meter Vac. in. Hg. (1)	Meter Vac. in. Hg. (2)	Dilution Tunnel Temp.	Dilution Tunnel dP	Pro. Rate (%) (1)	Pro. Rate (%) (2)	Scale Reading	Weight Change	Load Side Liquid Flow Rate	Boiler Side Liquid Flow Rate (optional)	Thermopile ΔT	Boiler to Heat Exch. Temp.	Heat Exch to Boiler Temp.	Inlet Load Temp.	Outlet Load Temp.	Stack	Filter (1)	Filter (2)	Ambient		Specific Heat of Inlet Water (BTU/lb-°F)	Mass Flow Rate of Inlet Water (lb/min)	Heat Output, Btu
177	28.458	28.551		0.16	0.16	1.32	1.05	0.25	83	83	72	1.40	1.92	82	0.012	107	107	96.7	0.06	0.68		125.4	185.6	181.2	59.8	185.2	242	77	77	72		1.001	5.662	711
178	28.620	28.712		0.16	0.16	1.32	1.05	0.25	83	83	72	1.40	1.94	82	0.015	97	96	96.7	-0.03	0.70		125.4	185.7	181.2	59.8	185.2	236	77	77	72		1.001	5.825	731
179	28.781	28.873		0.16	0.16	1.32	1.05	0.25	83	83	72	1.40	1.93	82	0.015	96	96	96.7	0.05	0.70		125.4	185.6	181.1	59.8	185.2	230	76	76	72		1.001	5.827	731
180	28.942	29.035		0.16	0.16	1.32	1.05	0.25	83	83	72	1.40	1.92	81	0.013	103	103	96.8	-0.11	0.66		125.6	185.7	181.4	59.7	185.3	225	76	76	72		1.001	5.504	692
181	29.104	29.196		0.16	0.16	1.32	1.05	0.25	83	83	72	1.40	1.92	81	0.016	93	92	96.7	0.08	0.66		125.6	185.7	181.3	59.7	185.3	222	76	76	72		1.001	5.507	693
182	29.265	29.357		0.16	0.16	1.32	1.05	0.25	83	83	72	1.40	1.93	80	0.014	99	99	96.6	0.12	0.68		125.6	185.6	181.3	59.7	185.2	220	76	76	72		1.001	5.666	712
183	29.426	29.519		0.16	0.16	1.32	1.05	0.25	83	83	72	1.40	1.91	79	0.015	96	96	96.7	-0.13	0.68		125.4	185.4	181.0	59.6	185.1	215	76	76	72		1.001	5.663	711
184	29.588	29.681		0.16	0.16	1.32	1.05	0.25	83	83	72	1.40	1.93	79	0.015	96	96	96.7	0.04	0.70		125.3	185.2	180.9	59.6	184.9	212	76	76	72		1.001	5.826	731
185	29.749	29.842		0.16	0.16	1.32	1.05	0.25	83	83	72	1.40	1.93	79	0.014	99	99	96.6	0.10	0.66		125.3	185.1	180.7	59.5	184.8	208	75	75	72		1.001	5.505	691
186	29.911	30.003		0.16	0.16	1.32	1.05	0.25	83	83	72	1.40	1.92	79	0.014	100	99	96.8	-0.23	0.72		125.2	184.9	180.6	59.5	184.6	204	75	75	72		1.001	5.972	748
187	30.072	30.165		0.16	0.16	1.32	1.05	0.25	83	83	72	1.40	1.93	78	0.014	99	99	96.7	0.18	0.70		124.9	184.7	180.4	59.4	184.3	200	75	75	72		1.001	5.793	724
188	30.233	30.327		0.16	0.16	1.31	1.05	0.25	83	83	72	1.40	1.93	78	0.015	96	96	96.7	-0.06	0.66		125.0	184.6	180.3	59.3	184.3	197	75	75	72		1.001	5.506	689
189	30.395	30.488		0.16	0.16	1.32	1.05	0.25	83	83	72	1.40	1.92	78	0.013	103	102	96.8	-0.05	0.68		124.9	184.6	180.3	59.3	184.2	193	75	75	72		1.001	5.669	709
190	30.556	30.649		0.16	0.16	1.32	1.06	0.25	83	83	72	1.40	1.92	78	0.013	103	102	96.7	0.06	0.68		124.8	184.4	180.1	59.3	184.1	189	75	75	72		1.001	5.668	708
191	30.717	30.811		0.16	0.16	1.32	1.05	0.25	83	83	72	1.40	1.92	78	0.015	96	96	96.7	-0.03	0.68		124.6	184.2	179.9	59.3	183.9	186	75	75	72		1.001	5.667	707
192	30.879	30.973		0.16	0.16	1.32	1.05	0.25	83	83	72	1.40	1.92	78	0.012	108	107	96.7	-0.01	0.72		124.3	183.9	179.6	59.3	183.5	183	75	75	72		1.001	5.989	745
193	31.040	31.134		0.16	0.16	1.32	1.05	0.25	83	83	72	1.40	1.93	78	0.014	99	99	96.7	0.05	0.70		124.1	183.7	179.4	59.3	183.3	180	74	74	72		1.001	5.832	725
194	31.202	31.295		0.16	0.16	1.32	1.06	0.25	83	83	72	1.40	1.93	78	0.015	96	95	96.9	-0.16	0.64		123.7	183.4	179.1	59.3	183.0	178	74	74	72		1.001	5.348	662
195	31.363	31.457		0.16	0.16	1.32	1.05	0.25	83	83	72	1.40	1.93	78	0.013	103	103	96.8	0.10	0.70		123.6	183.4	179.1	59.4	183.0	175	74	74	72		1.001	5.829	721
196	31.524	31.619		0.16	0.16	1.32	1.05	0.25	83	83	72	1.40	1.92	78	0.014	99	99	96.7	0.02	0.68		123.4	183.1	178.8	59.4	182.8	172	74	74	72		1.001	5.667	700
197	31.686	31.780		0.16	0.16	1.32	1.05	0.25	83	83	72	1.40	1.92	78	0.014	100	99	96.6	0.14	0.68		123.2	183.0	178.8	59.5	182.6	169	74	74	72		1.001	5.667	699
198	31.847	31.941		0.16	0.16	1.32	1.05	0.25	83	83	72	1.40	1.92	78	0.016	93	92	96.7	-0.08	0.70		122.7	182.6	178.4	59.5	182.2	166	74	74	72		1.001	5.829	716
199	32.009	32.103		0.16	0.16	1.32	1.05	0.25	83	83	72	1.40	1.91	78	0.013	103	103	96.7	-0.07	0.70		122.5	182.4	178.2	59.6	182.1	164	74	74	72		1.001	5.821	714
200	32.170	32.264		0.16	0.16	1.32	1.05	0.25	83	83	72	1.40	1.92	78	0.014	99	99	96.8	-0.05	0.70		122.3	182.1	178.0	59.6	181.9	162	74	74	72		1.001	5.808	711
201	32.332	32.425		0.16	0.16	1.32	1.05	0.25	83	83	72	1.40	1.91	77	0.015	96	95	96.7	0.07	0.68		122.0	181.9	177.7	59.6	181.6	159	74	74	72		1.001	5.666	692
202	32.493	32.587		0.16	0.16	1.32	1.06	0.25	83	83	72	1.40	1.93	77	0.014	99	99	96.7	-0.01	0.68		121.7	181.6	177.5	59.6	181.3	157	74	74	72		1.001	5.667	690
203	32.655	32.749		0.16	0.16	1.33	1.05	0.25	83	83	72	1.40	1.92	78	0.013	103	103	96.8	-0.09	0.68		121.5	181.5	177.3	59.6	181.1	155	74	74	72		1.001	5.668	690
204	32.816	32.910		0.16	0.16	1.33	1.05	0.25	83	83	72	1.40	1.92	77	0.014	99	98	96.7	0.09	0.68		121.3	181.3	177.1	59.6	180.9	153	74	74	72		1.001	5.667	688
205	32.978	33.072		0.16	0.16	1.32	1.06	0.25	83	83	72	1.40	1.92	77	0.015	96	96	96.8	-0.04	0.66		121.0	181.0	176.8	59.7	180.6	151	73	74	72		1.001	5.510	667
206	33.139	33.234		0.16	0.16	1.32	1.05	0.25	83	83	72	1.40	1.92	77	0.015	96	96	96.7	0.11	0.66		120.6	180.6	176.4	59.7	180.3	149	73	74	72		1.001	5.507	665
207	33.301	33.395		0.16	0.16	1.32	1.05	0.25	83	83	72	1.40	1.92	77	0.012	107	106	96.7	0.01	0.68		120.3	180.3	176.2	59.7	180.0	147	73	73	72		1.001	5.666	682
208	33.462	33.557		0.16	0.16	1.33	1.05	0.25	83	83	72	1.40	1.92	77	0.014	99	99	96.6	-0.13	0.72		120.2	180.2	176.1	59.7	179.9	145	73	73	72		1.001	5.988	721
209	33.624	33.718		0.16	0.16	1.32	1.06	0.25	83	83	72	1.40	1.93	77	0.015	96	95	96.9	-0.06	0.68		120.0	180.0	175.8	59.6	179.6	144	73	73	72		1.001	5.665	681
210	33.786	33.880		0.16	0.16	1.32	1.06	0.25	83	83	72	1.40	1.91	77	0.016	93	93	96.6	0.27	0.68		119.7	179.7	175.5	59.6	179.3	142	73	73	72		1.001	5.669	680
211	33.947	34.042		0.16	0.16	1.33	1.05	0.25	83	83	72	1.40	1.93	77	0.014	99	99	96.7	-0.10	0.66		119.6	179.4	175.1	59.6	179.1	161	73	73	72		1.001	5.505	659
212	34.109	34.203		0.16	0.16	1.31	1.05	0.25	83	83	72	1.40	1.94	82	0.014	100	99	96.6	0.10	0.66		119.3	179.0	174.8	59.5	178.8	189	74	74	72		1.001	5.510	658
213	34.270	34.364		0.16	0.16	1.32	1.05	0.25	83	83	72	1.40	1.92	87	0.016	93	93	96.4	0.23	0.67		119.0	178.7	174.4	59.4	178.4	176	73	74	72		1.001	5.542	660
214	34.431	34.526		0.16	0.16	1.32	1.05	0.25	83	83	72	1.40	1.92	80	0.015	96	96	96.5	-0.09	0.67		118.9	178.5	174.4	59.4	178.2	163	73	73	72		1.001	5.548	660
215	34.593	34.688		0.16	0.16	1.33	1.05	0.25	83	83	72	1.40	1.92	78	0.015	96	96	96.2	0.26	0.67		118.7	178.4	174.1	59.4	178.0	156	73	73	72		1.001	5.622	668
216	34.755	34.849		0.16	0.16	1.33	1.06	0.25	83	83	72	1.40	1.93	77	0.014	100	98	96.4	-0.19	0.70		118.4	178.0	173.8	59.3	177.7	150	73	73	72		1.001	5.831	691
217	34.916	35.011		0.16	0.16	1.32	1.06	0.25	83	83	72	1.40	1.91	77	0.014	99	99	96.4	0.01	0.72		118.1	177.7	173.6	59.3	177.4	147	73	73	72		1.001	5.988	708
218	35.078	35.173		0.16	0.16	1.33	1.05	0.25	83	83	72	1.40	1.93	77	0.014	100	99	96.4	-0.02	0.70		117.9	177.5	173.3	59.3	177.2	144	73	73	72		1.001	5.832	689
219	35.240	35.335		0.16	0.16	1.32	1.05	0.25	83	83	72	1.40	1.93	77	0.014	100	99	96.3	0.08	0.68		117.7	177.2	173.1	59.3	177.0	141	73	73	72		1.001	5.668	668
220	35.401	35.496		0.16	0.16	1.33	1.05	0.25	83	83	72	1.40	1.92	77	0.014	99	98	96.3	-0.01	0.68		117.4	177.0	172.8	59.4	176.7	139	73	73	72		1.001	5.669	666
221	35.563	35.658		0.16	0.16	1.33	1.06	0.25	83	83	72	1.40	1.91	77	0.015	96	96	96.3	0.01	0.70		116.9	176.5	172.4	59.4	176.3	137	73	73	72		1.001	5.830	682
222	35.724	35.821		0.16	0.16	1.32	1.06	0.25	83	83	72	1.40	1.91	77	0.014	99	100	96.3	0.05	0.70		116.6	176.3	172.3	59.5	176.1	136	73	73	72		1.001	5.830	680
223	35.886	35.982		0.16	0.16	1.33	1.05	0.25	83	83	72	1.40	1.92	77	0.015	96	95	96.3	0.00	0.60		116.4	176.1	172.3	59.5	175.9	134	73	73	72		1.001	5.023	585
224	36.048	36.143		0.16	0.16	1.32	1.06	0.25	83	83	72	1.40	1.91	77	0.013	103	102	96.4	-0.07	0.56		116.2	176.1	173.1	59.6	175.8	132	73	73	72		1.001	4.696	546
225	36.209	36.305		0.16	0.16	1.32	1.06	0.25	83	83	72	1.40	1.93	77	0.014	99	99	96.4	-0.05	0.53		116.1	176.0	173.1	59.7	175.8	131	73	73	72		1.001	4.374	508
226	36.371	36.468		0.16	0.16	1.32	1.05	0.25	83	83	72	1.40	1.91	77	0.014	100	100	96.4	0.02	0.58		115.8	175.9	173.0	59.8	175.7	129	73	73	72		1.001	4.859	564
227	36.533	36.629		0.16	0.16	1.33	1.05	0.25	83	83	72	1.40	1.92	77	0.014	100	98	96.3	0.03	0.56		115.5	175.6	172.7	60.0	175.4	128	73	73	72		1.001	4.698	543
228	36.694	36.790		0.16	0.16	1.33	1.05	0.25	83	83	72	1.40	1.91	77	0.014	99	98	96.3	0.00	0.53		115.1	175.4	172.5	60.1	175.2	127	73	73	72		1.001	4.395	506
229	36.856	36.952		0.16	0.16	1.33	1.06	0.25	83	83	72	1.40	1.92	77	0.015	96	96	96.4	-0.02	0.56		114.8	175.3	172.3	60.2	175.0	126	73	73	72		1.001	4.694	539
230	37.017	37.115		0.16	0.16	1.32	1.05	0.25	83	83	72	1.40	1.92	77	0.014	99	100	96.4	-0.05	0.60		114.4	174.9	172.0	60.3	174.7	125	73	73	72		1.001	4.961	568
231	37.179	37.276		0.16	0.16	1.32	1.05	0.25	83	83	71	1.40	1.91	77	0.015	96	95	96.4	-0.01	0.56		114.2	174.8	171.9	60.4	174.5	123	73	73	71		1.001	4.666	533
232	37.341	37.437		0.16	0.16	1.32	1.06	0.25	83	83	72	1.40	1.92	77	0.014	100	98	96.4	0.00	0.56		113.9	174.6	171.8	60.4	174.4	122	73	73	72		1.001	4.700	536
233	37.502	37.599		0.16	0.16	1.32	1.06	0.25	83	83	71	1.40	1.91	77	0.014	99	99	96.3	0.09	0.54		113.7	174.4	171.5	60.5	174.2	122	73	73	71		1.001	4.538	517
234	37.664	37.762		0.16	0.16	1.32	1.06	0.25	83	83	71	1.40	1.93	77	0.015	96	96	96.4	-0.07	0.53		113.4	174.1	171.3	60.6	174.0	120	73	73	71		1.001	4.375	497
235	37.826	37.923		0.16	0.16	1.32	1.05	0.25	83	83	71	1.40	1.93	77	0.014	100	98	96.5	-0.10	0.56		113.2	173.9	171.1	60.6	173.8	119	73	73	71		1.001	4.698	532
236	37.987	38.085		0.16	0.16	1.32	1.06	0.25	83	83	72	1.40	1.93	77	0.015	96	96	96.4	0.09	0.60		113.0	173.8	170.9	60.6	173.6	118	73	73	72		1.001	5.020	568
237	38.149	38.247		0.16	0.16	1.32	1.06	0.25	83	83	71	1.40	1.91	77	0.013	103	103	96.3	0.11	0.58		112.6	173.5	170.6	60.7	173.3	117	73	73	71		1.001	4.858	548
238	38.311	38.409		0.16	0.16	1.32	1.06	0.25	83	83	72	1.40	1.92	76	0.014	99	99	96.5	-0.16	0.58		112.4	173.3	170.5	60.7	173.1	116	73	73	72		1.001	4.854	546

Elapsed Time	Particulate Sampling Data																	Fuel Weight, lb		Flow, gpm		Temperature Data, oF									Stack			
	Gas Meter Cubic Feet (1)	Gas Meter Cubic Feet (2)	Gas Meter Cubic Feet (amb)	Sample Rate, cfm (1)	Sample Rate, cfm (2)	Orifice dH (1)	Orifice dH (2)	Orifice dH (amb)	Meter oF (1)	Meter oF (2)	Meter oF (amb)	Meter Vac. in. Hg. (1)	Meter Vac. in. Hg. (2)	Dilution Tunnel Temp.	Dilution Tunnel dP	Pro. Rate (%) (1)	Pro. Rate (%) (2)	Scale Reading	Weight Change	Load Side Liquid Flow Rate	Boiler Side Liquid Flow Rate (optional)	Thermopile ΔT	Boiler to Heat Exch. Temp.	Heat Exch to Boiler Temp.	Inlet Load Temp.	Outlet Load Temp.	Stack	Filter (1)	Filter (2)	Ambient		Specific Heat of Inlet Water (BTU/lb-°F)	Mass Flow Rate of Inlet Water (lb/min)	Heat Output, Btu
239	38.472	38.570		0.16	0.16	1.33	1.06	0.25	83	83	72	1.40	1.92	77	0.015	96	95	96.3	0.15	0.54		112.2	173.1	170.3	60.7	172.9	115	73	73	72		1.001	4.537	510
240	38.634	38.732		0.16	0.16	1.32	1.06	0.25	83	83	72	1.40	1.93	77	0.014	100	99	96.4	-0.09	0.54		112.0	172.9	170.1	60.7	172.7	115	73	73	72		1.001	4.532	508
241	38.796	38.894		0.16	0.16	1.32	1.06	0.25	83	83	72	1.40	1.93	76	0.014	99	99	96.4	-0.03	0.56		111.8	172.7	169.9	60.7	172.5	114	73	73	72		1.001	4.695	526
242	38.957	39.056		0.16	0.16	1.32	1.06	0.25	83	83	72	1.40	1.92	77	0.015	96	96	96.4	-0.02	0.56		111.5	172.4	169.5	60.7	172.2	113	73	73	72		1.001	4.700	525
243	39.119	39.217		0.16	0.16	1.32	1.05	0.25	83	83	71	1.40	1.91	77	0.014	100	98	96.3	0.14	0.56		111.3	172.2	169.4	60.6	172.0	148	73	73	71		1.001	4.694	523
244	39.280	39.379		0.16	0.16	1.31	1.05	0.25	83	83	72	1.40	1.93	83	0.014	99	100	96.2	0.11	0.53		111.0	171.8	169.0	60.6	171.6	158	73	73	72		1.001	4.429	492
245	39.442	39.540		0.16	0.16	1.32	1.06	0.25	83	83	72	1.40	1.91	82	0.014	100	99	96.1	0.06	0.56		110.8	171.5	168.8	60.6	171.4	143	73	73	72		1.001	4.697	521
246	39.604	39.703		0.16	0.16	1.33	1.06	0.25	83	83	72	1.40	1.91	78	0.014	100	100	96.1	0.07	0.53		110.7	171.5	168.7	60.6	171.3	134	73	73	72		1.001	4.377	485
247	39.765	39.864		0.16	0.16	1.32	1.05	0.25	83	83	72	1.40	1.91	77	0.014	99	98	96.1	-0.02	0.52		110.5	171.2	168.5	60.6	171.1	128	73	73	72		1.001	4.371	484
248	39.927	40.026		0.16	0.16	1.32	1.05	0.25	83	83	71	1.40	1.93	77	0.015	96	96	96.0	0.08	0.56		110.3	171.0	168.3	60.6	170.9	124	73	73	71		1.001	4.694	519
249	40.088	40.188		0.16	0.16	1.32	1.06	0.25	83	83	72	1.40	1.93	77	0.015	96	96	96.1	-0.12	0.58		110.1	170.9	168.1	60.6	170.7	122	73	73	72		1.001	4.856	535
250	40.250	40.350		0.16	0.16	1.32	1.06	0.25	83	83	71	1.40	1.91	77	0.012	107	107	96.0	0.10	0.52		109.8	170.6	167.9	60.6	170.4	120	73	73	71		1.001	4.374	481
251	40.412	40.511		0.16	0.16	1.32	1.06	0.25	83	83	72	1.40	1.92	77	0.014	100	98	96.0	-0.04	0.58		109.5	170.4	167.6	60.7	170.2	118	73	73	72		1.001	4.863	533
252	40.573	40.673		0.16	0.16	1.32	1.06	0.25	83	83	72	1.40	1.93	77	0.015	96	96	96.2	-0.15	0.56		109.2	170.1	167.4	60.7	170.0	116	73	73	72		1.001	4.696	514
253	40.735	40.835		0.16	0.16	1.32	1.06	0.25	83	83	71	1.40	1.93	77	0.014	100	99	96.1	0.12	0.56		108.9	169.9	167.2	60.8	169.7	115	73	73	71		1.001	4.695	512
254	40.897	40.997		0.16	0.16	1.32	1.06	0.25	83	83	72	1.40	1.91	77	0.014	100	99	96.1	-0.04	0.56		108.8	169.8	167.1	60.8	169.6	114	73	73	72		1.001	4.695	511
255	41.058	41.158		0.16	0.16	1.32	1.06	0.25	83	83	71	1.40	1.93	77	0.014	99	98	96.1	0.06	0.54		108.4	169.5	166.8	60.9	169.3	113	73	73	71		1.001	4.537	492
256	41.220	41.320		0.16	0.16	1.32	1.06	0.25	83	83	72	1.40	1.92	77	0.014	100	99	96.1	-0.07	0.60		108.2	169.3	166.6	60.9	169.1	112	73	73	72		1.001	5.010	543
257	41.382	41.482		0.16	0.16	1.32	1.06	0.25	83	83	71	1.40	1.91	77	0.014	100	99	96.1	0.04	0.54		107.9	169.1	166.3	61.0	168.8	111	73	73	71		1.001	4.533	489
258	41.543	41.644		0.16	0.16	1.32	1.05	0.25	83	83	72	1.40	1.92	77	0.015	96	96	96.2	-0.06	0.54		107.7	168.9	166.2	61.0	168.8	110	73	73	72		1.001	4.536	489
259	41.705	41.805		0.16	0.16	1.32	1.06	0.25	83	83	71	1.40	1.93	77	0.015	96	95	96.0	0.12	0.54		107.4	168.6	166.0	61.1	168.4	110	73	73	71		1.001	4.494	483
260	41.867	41.967		0.16	0.16	1.32	1.06	0.25	83	83	72	1.40	1.91	77	0.014	100	99	96.3	-0.24	0.59		107.2	168.5	165.8	61.1	168.3	109	73	73	72		1.001	4.951	531
261	42.028	42.129		0.16	0.16	1.32	1.06	0.25	83	83	72	1.40	1.93	77	0.014	99	99	96.2	0.07	0.55		106.8	168.1	165.5	61.1	168.0	108	73	73	72		1.001	4.555	487
262	42.190	42.291		0.16	0.16	1.32	1.06	0.25	83	83	72	1.40	1.91	77	0.014	100	99	96.1	0.07	0.55		106.6	168.0	165.3	61.2	167.8	107	73	73	72		1.001	4.542	485
263	42.352	42.453		0.16	0.16	1.32	1.06	0.25	83	83	72	1.40	1.93	77	0.014	100	99	96.1	0.06	0.52		106.4	167.7	165.1	61.2	167.6	107	73	73	72		1.001	4.370	465
264	42.513	42.615		0.16	0.16	1.33	1.06	0.25	83	83	72	1.40	1.92	77	0.015	96	96	96.1	0.01	0.54		106.1	167.5	164.8	61.3	167.3	106	73	73	72		1.001	4.533	481
265	42.675	42.777		0.16	0.16	1.32	1.05	0.25	83	83	72	1.40	1.91	77	0.014	100	99	96.2	-0.09	0.56		105.8	167.2	164.6	61.3	167.1	106	73	73	72		1.001	4.697	497
266	42.837	42.939		0.16	0.16	1.31	1.05	0.25	83	83	71	1.40	1.91	76	0.013	103	103	96.2	-0.01	0.54		105.5	167.0	164.4	61.3	166.8	105	73	73	71		1.001	4.539	480
267	42.998	43.100		0.16	0.16	1.32	1.05	0.25	83	83	71	1.40	1.93	77	0.012	107	106	96.1	0.05	0.58		105.4	166.8	164.2	61.3	166.7	104	72	73	71		1.001	4.858	512
268	43.160	43.262		0.16	0.16	1.32	1.06	0.25	83	83	71	1.40	1.91	77	0.013	103	103	96.0	0.10	0.54		105.1	166.6	164.0	61.4	166.4	104	72	73	71		1.001	4.539	477
269	43.321	43.424		0.16	0.16	1.32	1.06	0.25	83	83	71	1.40	1.93	77	0.014	99	99	96.1	-0.09	0.56		104.8	166.4	163.8	61.4	166.2	103	72	73	71		1.001	4.702	493
270	43.483	43.586		0.16	0.16	1.33	1.05	0.25	83	83	71	1.40	1.91	77	0.016	93	93	96.2	-0.05	0.51		104.6	166.1	163.5	61.3	165.9	103	72	73	71		1.001	4.212	441
271	43.645	43.747		0.16	0.16	1.32	1.06	0.25	83	83	71	1.40	1.92	77	0.014	100	98	96.2	0.01	0.54		104.5	166.0	163.4	61.3	165.8	102	72	73	71		1.001	4.537	475
272	43.807	43.909		0.16	0.16	1.32	1.06	0.25	83	83	71	1.40	1.93	77	0.015	96	96	96.2	-0.01	0.54		104.3	165.7	163.1	61.2	165.5	102	72	73	71		1.001	4.533	473
273	43.968	44.071		0.16	0.16	1.32	1.05	0.25	83	83	72	1.40	1.93	77	0.014	99	99	96.1	0.10	0.56		104.1	165.4	162.9	61.2	165.3	101	72	73	72		1.001	4.689	489
274	44.130	44.233		0.16	0.16	1.32	1.05	0.25	83	83	71	1.40	1.91	76	0.014	99	99	96.0	0.02	0.54		103.9	165.2	162.6	61.1	165.1	127	72	73	71		1.001	4.534	472
275	44.291	44.394		0.16	0.16	1.32	1.05	0.25	83	83	71	1.40	1.93	77	0.015	96	95	95.9	0.15	0.57		103.7	165.0	162.4	61.1	164.8	138	72	73	71		1.001	4.715	490
276	44.453	44.556		0.16	0.16	1.32	1.05	0.25	83	83	71	1.40	1.93	81	0.014	100	99	96.0	-0.06	0.54		103.5	164.7	162.1	61.0	164.5	134	73	73	71		1.001	4.496	466
277	44.614	44.718		0.16	0.16	1.32	1.05	0.25	83	83	71	1.40	1.93	79	0.014	99	99	96.0	0.01	0.54		103.3	164.4	161.8	61.0	164.2	126	73	73	71		1.001	4.538	469
278	44.776	44.880		0.16	0.16	1.32	1.05	0.25	83	83	71	1.40	1.92	77	0.015	96	96	96.0	0.00	0.54		103.1	164.2	161.6	60.9	164.1	120	72	73	71		1.001	4.536	468
279	44.938	45.041		0.16	0.16	1.32	1.05	0.25	83	83	71	1.40	1.91	77	0.013	103	102	96.0	-0.09	0.56		102.9	164.0	161.4	60.9	163.8	116	72	73	71		1.001	4.697	484
280	45.099	45.203		0.16	0.16	1.32	1.05	0.25	83	83	72	1.40	1.93	77	0.016	93	93	95.8	0.19	0.54		102.7	163.8	161.2	60.9	163.6	113	72	73	72		1.001	4.534	466
281	45.261	45.365		0.16	0.16	1.32	1.05	0.25	83	83	71	1.40	1.93	77	0.014	100	99	96.0	-0.15	0.56		102.5	163.5	161.0	60.9	163.4	110	72	73	71		1.001	4.696	482
282	45.422	45.527		0.16	0.16	1.33	1.05	0.25	83	83	72	1.40	1.93	77	0.015	96	96	95.9	0.10	0.53		102.2	163.3	160.8	60.9	163.2	109	72	73	72		1.001	4.374	448
283	45.584	45.688		0.16	0.16	1.33	1.06	0.25	83	83	71	1.40	1.91	77	0.015	96	95	95.9	-0.03	0.58		101.9	163.0	160.5	60.9	162.9	108	72	72	71		1.001	4.861	496
284	45.746	45.849		0.16	0.16	1.32	1.06	0.25	83	83	71	1.40	1.93	77	0.014	100	98	95.9	0.05	0.56		101.7	162.9	160.3	61.0	162.7	106	72	72	71		1.001	4.699	479
285	45.907	46.012		0.16	0.16	1.32	1.05	0.25	83	83	71	1.40	1.92	77	0.014	99	100	96.0	-0.13	0.54		101.4	162.6	160.1	61.0	162.4	105	72	72	71		1.001	4.536	461
286	46.069	46.174		0.16	0.16	1.32	1.05	0.25	83	83	71	1.40	1.91	77	0.014	100	99	95.9	0.06	0.54		101.2	162.4	159.9	61.1	162.2	104	72	72	71		1.001	4.539	460
287	46.231	46.335		0.16	0.16	1.32	1.05	0.25	83	83	71	1.40	1.91	77	0.015	96	95	95.9	0.05	0.54		100.9	162.1	159.6	61.1	162.0	104	72	72	71		1.001	4.535	458
288	46.392	46.497		0.16	0.16	1.33	1.06	0.25	83	83	71	1.40	1.93	77	0.015	96	96	95.7	0.15	0.50		100.6	162.0	159.5	61.2	161.8	115	72	72	71		1.001	4.206	424
289	46.554	46.659		0.16	0.16	1.33	1.05	0.25	83	83	71	1.40	1.92	77	0.015	96	96	95.7	0.01	0.51		100.3	161.7	159.2	61.2	161.5	138	72	72	71		1.001	4.210	423
290	46.715	46.820		0.16	0.16	1.32	1.04	0.25	83	83	71	1.40	1.92	82	0.015	96	96	95.7	0.04	0.58		100.0	161.4	158.9	61.3	161.3	155	72	73	71		1.001	4.833	484
291	46.877	46.981		0.16	0.16	1.32	1.05	0.25	83	83	71	1.40	1.92	83	0.014	100	99	95.6	0.05	0.56		99.8	161.2	158.7	61.3	161.0	165	73	73	71		1.001	4.655	465
292	47.038	47.143		0.16	0.16	1.32	1.05	0.25	83	83	71	1.40	1.92	84	0.012	108	108	95.5	0.11	0.52		99.6	161.0	158.5	61.3	160.9	173	73	73	71		1.001	4.292	428
293	47.200	47.305		0.16	0.16	1.32	1.05	0.25	83	83	71	1.40	1.92	84	0.016	94	93	95.2	0.33	0.58		99.5	160.9	158.4	61.3	160.8	187	73	73	71		1.001	4.857	484
294	47.362	47.466		0.16	0.16	1.32	1.05	0.25	83	83	71	1.40	1.94	87	0.015	97	96	95.0	0.15	0.56		99.3	160.8	158.3	61.3	160.6	201	73	73	71		1.001	4.698	467
295	47.523	47.627		0.16	0.16	1.33	1.06	0.25	83	83	71	1.40	1.93	89	0.013	104	103	94.7	0.34	0.51		99.2	160.8	158.3	61.3	160.5	213	73	73	71		1.001	4.214	419
296	47.685	47.789		0.16	0.16	1.32	1.05	0.25	83	83	71	1.40	1.92	91	0.015	97	97	94.3	0.39	0.53		99.2	160.7	158.2	61.3	160.5	224	73	73	71		1.001	4.374	434
297	47.846	47.950		0.16	0.16	1.32	1.05	0.25	83	83	71	1.40	1.94	92	0.015	97	96	94.1	0.21	0.51		99.2	160.8	158.3	61.3	160.6	236	73	74	71		1.001	4.213	419
298	48.007	48.111		0.16	0.16	1.32	1.05	0.25	83	83	71	1.40	1.93	94	0.014	100	100	93.8	0.35	0.51		99.4	161.0	158.5	61.3	160.7	248	74	74	71		1.001	4.209	419
299	48.169	48.272		0.16	0.16	1.32	1.05	0.25	83	83	71	1.40	1.94	95	0.013	105	104	93.3	0.43	0.54		99.7	161.4	158.9	61.3	161.1	260	74	74	71		1.001	4.532	453
300	48.330	48.435		0.16	0.16	1.32	1.05	0.25	83	83	71	1.40	1.93	97	0.015	97	98	93.0	0.31	0.56		100.2	161.8	159.3	61.3	161.4	274	74	74	71		1.001	4.696	471

Elapsed Time	Particulate Sampling Data																	Fuel Weight, lb		Flow, gpm		Temperature Data, oF									Stack			
	Gas Meter Cubic Feet (1)	Gas Meter Cubic Feet (2)	Gas Meter Cubic Feet (amb)	Sample Rate, cfm (1)	Sample Rate, cfm (2)	Orifice dH (1)	Orifice dH (2)	Orifice dH (amb)	Meter oF (1)	Meter oF (2)	Meter oF (amb)	Meter Vac. in. Hg. (1)	Meter Vac. in. Hg. (2)	Dilution Tunnel Temp.	Dilution Tunnel dP	Pro. Rate (%) (1)	Pro. Rate (%) (2)	Scale Reading	Weight Change	Load Side Liquid Flow Rate	Boiler Side Liquid Flow Rate (optional)	Thermopile ΔT	Boiler to Heat Exch. Temp.	Heat Exch to Boiler Temp.	Inlet Load Temp.	Outlet Load Temp.	Stack	Filter (1)	Filter (2)	Ambient		Specific Heat of Inlet Water (BTU/lb-°F)	Mass Flow Rate of Inlet Water (lb/min)	Heat Output, Btu
301	48.491	48.595		0.16	0.16	1.32	1.05	0.25	83	83	71	1.40	1.94	99	0.014	101	100	92.4	0.59	0.52		100.8	162.5	159.9	61.2	162.1	287	74	74	71		1.001	4.371	441
302	48.652	48.755		0.16	0.16	1.32	1.05	0.25	83	83	71	1.40	1.95	100	0.013	105	104	91.9	0.54	0.54		101.6	163.3	160.7	61.2	162.8	299	74	75	71		1.001	4.534	461
303	48.814	48.917		0.16	0.16	1.32	1.05	0.25	83	83	71	1.40	1.93	102	0.014	102	101	91.3	0.57	0.56		102.5	164.3	161.7	61.2	163.7	309	75	75	71		1.001	4.695	482
304	48.975	49.078		0.16	0.16	1.32	1.05	0.25	83	83	71	1.40	1.94	104	0.014	101	101	90.9	0.40	0.51		103.7	165.4	162.7	61.2	164.9	317	75	75	71		1.001	4.215	438
305	49.135	49.238		0.16	0.16	1.32	1.04	0.25	83	83	71	1.40	1.95	105	0.014	101	100	90.3	0.61	0.72		105.0	166.8	164.2	61.1	166.1	325	75	75	71		1.001	5.989	630
306	49.296	49.398		0.16	0.16	1.32	1.05	0.25	83	83	71	1.40	1.95	106	0.013	105	104	89.7	0.63	0.72		106.0	167.6	164.0	61.1	167.1	331	76	76	71		1.001	5.993	636
307	49.457	49.559		0.16	0.16	1.32	1.05	0.25	83	83	71	1.40	1.95	107	0.014	102	101	89.2	0.44	0.69		107.1	168.6	164.9	60.9	168.1	337	76	76	71		1.001	5.747	616
308	49.618	49.719		0.16	0.16	1.31	1.05	0.25	83	83	71	1.40	1.95	108	0.015	98	97	88.6	0.60	0.68		108.2	169.4	165.7	60.8	168.9	344	76	76	71		1.001	5.669	614
309	49.779	49.879		0.16	0.16	1.31	1.05	0.25	83	83	71	1.40	1.95	110	0.014	102	101	88.0	0.64	0.66		108.9	170.1	166.5	60.7	169.5	348	76	77	71		1.001	5.509	601
310	49.939	50.041		0.16	0.16	1.32	1.04	0.25	83	83	71	1.40	1.95	110	0.015	98	99	87.4	0.59	0.64		110.1	171.1	167.6	60.5	170.6	351	77	77	71		1.001	5.337	588
311	50.100	50.200		0.16	0.16	1.32	1.04	0.25	83	83	72	1.40	1.95	111	0.013	106	104	87.0	0.45	0.60		111.5	172.6	169.1	60.5	172.0	352	77	77	72		1.001	5.018	560
312	50.261	50.360		0.16	0.16	1.32	1.04	0.25	83	83	72	1.40	1.95	111	0.014	102	101	86.3	0.63	0.68		112.7	173.8	170.1	60.5	173.2	352	77	77	72		1.001	5.662	639
313	50.421	50.520		0.16	0.16	1.32	1.04	0.25	83	83	71	1.50	1.95	111	0.014	101	101	85.8	0.54	0.62		114.1	175.3	171.5	60.5	174.6	353	77	77	71		1.001	5.173	591
314	50.582	50.680		0.16	0.16	1.32	1.04	0.25	83	83	71	1.50	1.96	111	0.014	102	101	85.5	0.32	0.64		115.3	176.4	172.7	60.6	175.9	355	77	77	71		1.001	5.342	617
315	50.743	50.839		0.16	0.16	1.32	1.04	0.25	83	83	71	1.40	1.95	112	0.015	99	97	84.8	0.64	0.64		116.4	177.5	173.8	60.6	177.0	358	78	78	71		1.001	5.340	622
316	50.903	51.000		0.16	0.16	1.32	1.03	0.25	83	83	71	1.50	1.95	112	0.014	101	102	84.0	0.79	0.62		117.2	178.3	174.6	60.6	177.8	360	78	78	71		1.001	5.180	608
317	51.064	51.159		0.16	0.16	1.32	1.03	0.25	83	83	71	1.50	1.96	113	0.015	99	97	83.6	0.40	0.64		117.9	179.1	175.3	60.6	178.6	359	78	78	71		1.001	5.340	631
318	51.224	51.319		0.16	0.16	1.32	1.04	0.25	83	83	71	1.50	1.96	112	0.014	101	101	83.1	0.51	0.62		119.2	180.5	176.7	60.6	179.9	357	78	78	71		1.001	5.180	618
319	51.385	51.479		0.16	0.16	1.32	1.04	0.25	83	83	71	1.50	1.95	111	0.014	102	101	82.7	0.42	0.64		120.1	181.2	177.4	60.6	180.7	356	78	78	71		1.001	5.343	642
320	51.546	51.638		0.16	0.16	1.32	1.03	0.25	83	83	71	1.50	1.97	111	0.015	99	97	82.2	0.54	0.60		121.3	182.4	178.6	60.6	181.9	357	78	78	71		1.001	5.015	609
321	51.707	51.797		0.16	0.16	1.32	1.03	0.25	83	83	71	1.50	1.96	111	0.015	99	97	81.8	0.37	0.62		122.4	183.4	179.5	60.6	182.9	333	79	79	71		1.001	5.180	635
322	51.868	51.958		0.16	0.16	1.32	1.04	0.25	83	83	72	1.40	1.95	98	0.012	109	108	81.6	0.22	0.64		123.2	184.2	180.2	60.5	183.6	307	78	78	72		1.001	5.330	657
323	52.029	52.117		0.16	0.16	1.31	1.04	0.25	83	83	72	1.40	1.96	91	0.013	104	102	81.4	0.18	0.64		123.9	184.6	180.8	60.4	184.3	290	78	78	72		1.001	5.340	663
324	52.190	52.278		0.16	0.16	1.31	1.04	0.25	83	83	71	1.40	1.94	87	0.014	100	99	81.3	0.14	0.56		124.3	185.1	181.7	60.3	184.6	278	78	78	71		1.001	4.694	584
325	52.351	52.439		0.16	0.16	1.31	1.04	0.25	83	83	72	1.40	1.95	85	0.014	100	99	81.1	0.15	0.52		124.9	185.6	182.4	60.3	185.2	267	77	77	72		1.001	4.372	547
326	52.512	52.599		0.16	0.16	1.31	1.04	0.25	83	83	71	1.40	1.95	84	0.014	100	98	81.2	-0.04	0.54		125.1	185.9	182.7	60.3	185.4	257	77	77	71		1.001	4.533	568
327	52.673	52.759		0.16	0.16	1.31	1.04	0.25	83	83	71	1.40	1.94	83	0.013	103	102	81.2	-0.01	0.56		125.3	186.1	182.9	60.4	185.7	250	77	77	71		1.001	4.692	589
328	52.834	52.921		0.16	0.16	1.32	1.04	0.25	83	83	71	1.40	1.94	82	0.015	96	96	81.2	-0.01	0.56		125.5	186.4	183.2	60.5	186.0	243	77	77	71		1.001	4.693	590
329	52.995	53.081		0.16	0.16	1.32	1.03	0.25	83	83	71	1.40	1.95	81	0.014	99	98	81.1	0.04	0.56		125.6	186.4	183.2	60.5	186.1	237	77	77	71		1.001	4.692	590
330	53.156	53.241		0.16	0.16	1.32	1.04	0.25	83	83	71	1.40	1.95	81	0.014	99	98	81.0	0.13	0.60		125.5	186.4	183.1	60.5	186.1	231	76	76	71		1.001	5.017	631
331	53.317	53.402		0.16	0.16	1.32	1.04	0.25	83	83	71	1.40	1.94	81	0.012	107	107	81.1	-0.08	0.54		125.7	186.6	183.3	60.5	186.2	226	76	76	71		1.001	4.533	570
332	53.478	53.563		0.16	0.16	1.32	1.04	0.25	83	83	71	1.40	1.94	80	0.014	99	99	81.0	0.07	0.54		125.7	186.5	183.3	60.5	186.3	221	76	76	71		1.001	4.531	570
333	53.639	53.724		0.16	0.16	1.32	1.04	0.25	83	83	71	1.40	1.93	80	0.013	103	102	81.0	0.06	0.54		125.8	186.6	183.4	60.5	186.3	218	76	76	71		1.001	4.533	571
334	53.801	53.884		0.16	0.16	1.31	1.04	0.25	83	83	71	1.40	1.93	79	0.012	108	106	80.9	0.04	0.56		125.8	186.5	183.3	60.5	186.2	215	76	76	71		1.001	4.695	591
335	53.962	54.046		0.16	0.16	1.31	1.04	0.25	83	83	72	1.40	1.93	79	0.014	99	99	81.0	-0.07	0.58		125.7	186.4	183.2	60.4	186.1	212	75	76	72		1.001	4.813	606
336	54.123	54.206		0.16	0.16	1.31	1.04	0.25	83	83	71	1.40	1.93	78	0.016	93	92	80.9	0.07	0.55		125.8	186.4	183.3	60.4	186.2	208	75	75	71		1.001	4.610	581
337	54.284	54.366		0.16	0.16	1.31	1.04	0.25	83	83	71	1.40	1.94	78	0.014	99	98	81.0	-0.09	0.54		125.9	186.5	183.3	60.3	186.2	204	75	75	71		1.001	4.466	563
338	54.445	54.528		0.16	0.16	1.31	1.04	0.25	83	83	71	1.40	1.93	78	0.014	99	99	80.9	0.07	0.56		125.7	186.3	183.0	60.3	186.0	200	75	75	71		1.001	4.652	586
339	54.607	54.689		0.16	0.16	1.31	1.04	0.25	83	83	71	1.40	1.94	78	0.014	100	99	81.0	-0.03	0.54		125.6	186.1	182.9	60.3	185.9	197	75	75	71		1.001	4.536	570
340	54.768	54.849		0.16	0.16	1.32	1.04	0.25	83	83	71	1.40	1.94	78	0.015	96	95	81.0	-0.01	0.52		125.4	186.0	182.9	60.3	185.7	193	75	75	71		1.001	4.372	549
341	54.929	55.009		0.16	0.16	1.32	1.04	0.25	83	83	71	1.40	1.95	78	0.014	99	98	81.0	-0.04	0.54		125.3	185.9	182.8	60.3	185.6	190	75	75	71		1.001	4.531	569
342	55.090	55.171		0.16	0.16	1.31	1.04	0.25	83	83	71	1.40	1.93	78	0.014	99	99	81.0	0.01	0.52		125.1	185.6	182.4	60.3	185.4	186	75	75	71		1.001	4.366	547
343	55.251	55.331		0.16	0.16	1.31	1.04	0.25	83	83	71	1.40	1.93	78	0.015	96	95	81.0	0.01	0.56		124.7	185.3	182.1	60.3	185.0	184	74	74	71		1.001	4.697	586
344	55.412	55.492		0.16	0.16	1.31	1.04	0.25	83	83	71	1.40	1.94	78	0.013	103	102	81.1	-0.06	0.54		124.5	185.1	182.0	60.4	184.9	180	74	74	71		1.001	4.530	565
345	55.573	55.654		0.16	0.16	1.31	1.04	0.25	83	83	71	1.40	1.93	77	0.013	103	103	81.0	0.06	0.58		124.2	184.9	181.8	60.5	184.7	177	74	74	71		1.001	4.859	604
346	55.734	55.814		0.16	0.16	1.31	1.04	0.25	83	83	71	1.40	1.93	77	0.015	96	94	81.1	-0.04	0.56		124.0	184.7	181.6	60.5	184.5	174	74	74	71		1.001	4.692	582
347	55.895	55.974		0.16	0.16	1.32	1.04	0.25	83	83	71	1.40	1.94	77	0.015	96	94	81.0	0.03	0.56		123.7	184.6	181.5	60.6	184.3	171	74	74	71		1.001	4.694	581
348	56.057	56.135		0.16	0.16	1.32	1.04	0.25	83	83	72	1.40	1.93	77	0.014	100	98	81.1	-0.06	0.58		123.6	184.5	181.4	60.7	184.3	169	74	74	72		1.001	4.854	601
349	56.218	56.296		0.16	0.16	1.32	1.04	0.25	83	83	71	1.40	1.93	77	0.012	107	106	81.0	0.11	0.54		123.3	184.3	181.2	60.8	184.1	166	74	74	71		1.001	4.537	560
350	56.379	56.456		0.16	0.16	1.32	1.04	0.25	83	83	72	1.40	1.95	77	0.014	99	98	81.0	-0.04	0.58		123.0	184.2	181.1	60.9	183.9	163	74	74	72		1.001	4.845	597
351	56.540	56.617		0.16	0.16	1.32	1.04	0.25	83	83	71	1.40	1.93	77	0.013	103	102	81.1	-0.03	0.58		122.9	184.1	181.0	60.9	183.8	161	74	74	71		1.001	4.799	590
352	56.701	56.779		0.16	0.16	1.32	1.04	0.25	83	83	71	1.40	1.94	77	0.015	96	96	81.0	0.06	0.56		122.7	184.0	180.9	61.0	183.7	159	74	74	71		1.001	4.676	575
353	56.863	56.939		0.16	0.16	1.32	1.04	0.25	83	83	72	1.40	1.93	77	0.013	103	101	81.0	0.01	0.54		122.6	183.8	180.7	61.0	183.6	157	74	74	72		1.001	4.533	556
354	57.024	57.100		0.16	0.16	1.32	1.04	0.25	83	83	72	1.40	1.95	77	0.013	103	102	81.0	-0.05	0.56		122.3	183.6	180.5	61.0	183.4	154	74	74	72		1.001	4.692	575
355	57.185	57.261		0.16	0.16	1.32	1.04	0.25	83	83	72	1.40	1.93	77	0.013	103	102	81.1	-0.10	0.56		122.0	183.3	180.3	61.1	183.1	153	74	74	72		1.001	4.696	574
356	57.346	57.422		0.16	0.16	1.32	1.04	0.25	83	83	72	1.40	1.95	77	0.014	99	98	81.0	0.12	0.56		121.8	183.2	180.1	61.2	182.9	150	73	74	72		1.001	4.695	572
357	57.507	57.582		0.16	0.16	1.32	1.04	0.25	83	83	71	1.40	1.93	77	0.014	99	98	81.0	-0.03	0.56		121.6	183.0	180.0	61.2	182.8	148	73	74	71		1.001	4.693	571
358	57.668	57.743		0.16	0.16	1.32	1.04	0.25	83	83	71	1.40	1.93	77	0.014	99	98	81.1	-0.07	0.58		121.4	182.9	179.8	61.2	182.6	146	73	73	71		1.001	4.857	590
359	57.829	57.904		0.16	0.16	1.32	1.04	0.25	83	83	72	1.40	1.93	77	0.014	99	98	81.0	0.10	0.56		121.2	182.7	179.6	61.2	182.4	144	73	73	72		1.001	4.693	570
360	57.991	58.065		0.16	0.16	1.32	1.04	0.25	83	83	71	1.40	1.93	77	0.014	100	98	81.1	-0.05	0.54		121.0	182.4	179.4	61.2	182.2	143	73	73	71		1.001	4.533	549
361	58.152	58.226		0.16	0.16	1.32	1.04	0.25	83	83	71	1.40	1.93	77	0.014	99	98	81.1	-0.06	0.56		120.8	182.2	179.2	61.2	182.0	141	73	73	71		1.001	4.693	568
362	58.313	58.387		0.16	0.16	1.32	1.04	0.25	83	83	71	1.40	1.93	77	0.015	96	95	81.1	0.06	0.56		120.6	181.9	179.0	61.2	181.8	140	73	73	71		1.001	4.693	567

Elapsed Time	Particulate Sampling Data																	Fuel Weight, lb		Flow, gpm		Temperature Data, oF									Stack			
	Gas Meter Cubic Feet (1)	Gas Meter Cubic Feet (2)	Gas Meter Cubic Feet (amb)	Sample Rate, cfm (1)	Sample Rate, cfm (2)	Orifice dH (1)	Orifice dH (2)	Orifice dH (amb)	Meter oF (1)	Meter oF (2)	Meter oF (amb)	Meter Vac. in. Hg. (1)	Meter Vac. in. Hg. (2)	Dilution Tunnel Temp.	Dilution Tunnel dP	Pro. Rate (%) (1)	Pro. Rate (%) (2)	Scale Reading	Weight Change	Load Side Liquid Flow Rate	Boiler Side Liquid Flow Rate (optional)	Thermopile ΔT	Boiler to Heat Exch. Temp.	Heat Exch to Boiler Temp.	Inlet Load Temp.	Outlet Load Temp.	Stack	Filter (1)	Filter (2)	Ambient		Specific Heat of Inlet Water (BTU/lb-°F)	Mass Flow Rate of Inlet Water (lb/min)	Heat Output, Btu
363	58.474	58.548		0.16	0.16	1.32	1.04	0.25	83	83	71	1.40	1.94	77	0.015	96	95	81.0	0.05	0.54		120.3	181.8	178.8	61.2	181.6	165	73	73	71		1.001	4.535	546
364	58.636	58.708		0.16	0.16	1.31	1.03	0.25	83	83	72	1.40	1.95	83	0.015	97	95	80.6	0.24	0.58		120.0	181.4	178.5	61.2	181.3	192	74	74	72		1.001	4.866	585
365	58.797	58.869		0.16	0.16	1.32	1.04	0.25	83	83	72	1.40	1.94	88	0.014	100	99	80.7	0.11	0.56		119.8	181.3	178.3	61.2	181.0	175	73	73	72		1.001	4.698	563
366	58.958	59.030		0.16	0.16	1.32	1.05	0.25	83	83	71	1.40	1.93	80	0.014	99	99	80.7	-0.03	0.54		119.7	181.1	178.1	61.2	180.9	163	73	73	71		1.001	4.478	537
367	59.119	59.190		0.16	0.16	1.32	1.05	0.25	83	83	71	1.40	1.94	78	0.014	99	98	80.7	0.00	0.55		119.6	181.0	178.0	61.2	180.8	155	73	73	71		1.001	4.623	554
368	59.281	59.351		0.16	0.16	1.32	1.05	0.25	83	83	71	1.40	1.93	77	0.013	103	102	80.6	0.06	0.52		119.6	180.9	177.9	61.1	180.7	150	73	73	71		1.001	4.344	520
369	59.442	59.513		0.16	0.16	1.32	1.05	0.25	83	83	71	1.40	1.92	77	0.015	96	96	80.5	0.12	0.58		119.5	180.7	177.8	61.1	180.6	146	73	73	71		1.001	4.858	581
370	59.604	59.674		0.16	0.16	1.32	1.05	0.25	83	83	71	1.40	1.93	77	0.014	100	98	80.7	-0.16	0.52		119.3	180.5	177.6	61.0	180.3	143	73	73	71		1.001	4.371	522
371	59.765	59.835		0.16	0.16	1.32	1.05	0.25	83	83	71	1.40	1.94	77	0.014	99	98	80.5	0.12	0.54		119.1	180.2	177.3	60.9	180.1	141	73	73	71		1.001	4.535	541
372	59.926	59.996		0.16	0.16	1.32	1.05	0.25	83	83	71	1.40	1.94	77	0.014	99	98	80.6	-0.06	0.52		118.9	180.1	177.1	60.9	179.8	138	73	73	71		1.001	4.371	520
373	60.087	60.158		0.16	0.16	1.32	1.05	0.25	83	83	72	1.40	1.94	77	0.014	99	99	80.6	0.05	0.54		118.8	179.8	176.8	60.8	179.6	137	73	73	72		1.001	4.531	539
374	60.249	60.318		0.16	0.16	1.32	1.05	0.25	83	83	71	1.40	1.94	77	0.013	103	101	80.6	-0.05	0.54		118.5	179.6	176.6	60.8	179.3	135	73	73	71		1.001	4.532	538
375	60.410	60.480		0.16	0.16	1.33	1.04	0.25	83	83	71	1.40	1.94	77	0.013	103	103	80.7	-0.10	0.56		118.5	179.4	176.5	60.8	179.2	133	73	73	71		1.001	4.695	557
376	60.571	60.642		0.16	0.16	1.33	1.05	0.25	83	83	71	1.40	1.94	77	0.014	99	99	80.6	0.06	0.56		118.2	179.2	176.3	60.8	179.0	131	73	73	71		1.001	4.695	556
377	60.733	60.802		0.16	0.16	1.33	1.04	0.25	83	83	71	1.40	1.94	77	0.014	100	98	80.7	-0.07	0.54		118.0	179.0	176.0	60.8	178.8	130	73	73	71		1.001	4.533	536
378	60.894	60.963		0.16	0.16	1.33	1.04	0.25	83	83	71	1.40	1.94	77	0.013	103	102	80.7	0.04	0.58		117.7	178.7	175.8	60.8	178.5	128	73	73	71		1.001	4.859	573
379	61.056	61.124		0.16	0.16	1.33	1.05	0.25	83	83	71	1.40	1.92	77	0.014	100	98	80.7	0.00	0.54		117.5	178.6	175.8	60.8	178.3	127	73	73	71		1.001	4.528	533
380	61.217	61.286		0.16	0.16	1.32	1.05	0.25	83	83	72	1.40	1.92	77	0.014	99	99	80.6	0.06	0.56		117.2	178.4	175.4	60.9	178.2	126	73	73	72		1.001	4.695	551
381	61.378	61.446		0.16	0.16	1.32	1.05	0.25	83	83	71	1.40	1.92	77	0.014	99	98	80.6	-0.02	0.52		117.0	178.2	175.3	61.0	177.9	125	73	73	71		1.001	4.357	510
382	61.540	61.608		0.16	0.16	1.32	1.05	0.25	83	83	71	1.40	1.93	77	0.015	96	96	80.6	-0.15	0.57		116.7	177.9	175.0	61.0	177.7	124	73	73	71		1.001	4.727	552
383	61.701	61.769		0.16	0.16	1.32	1.05	0.25	83	83	71	1.40	1.93	77	0.014	99	98	80.7	0.03	0.54		116.4	177.6	174.7	61.0	177.4	123	73	73	71		1.001	4.532	528
384	61.862	61.930		0.16	0.16	1.33	1.04	0.25	83	83	72	1.40	1.92	77	0.014	99	98	80.7	0.03	0.52		116.1	177.4	174.5	61.1	177.2	122	73	73	72		1.001	4.372	508
385	62.024	62.091		0.16	0.16	1.32	1.04	0.25	83	83	71	1.40	1.93	77	0.015	96	95	80.5	0.17	0.54		115.8	177.1	174.2	61.1	176.9	121	73	73	71		1.001	4.536	526
386	62.185	62.252		0.16	0.16	1.33	1.05	0.25	83	83	71	1.40	1.92	78	0.015	96	95	80.6	-0.11	0.54		115.5	176.9	174.0	61.1	176.7	120	73	73	71		1.001	4.540	525
387	62.347	62.414		0.16	0.16	1.33	1.05	0.25	83	83	71	1.40	1.94	77	0.015	96	96	80.6	0.03	0.54		115.4	176.7	173.9	61.1	176.5	119	73	73	71		1.001	4.537	524
388	62.508	62.575		0.16	0.16	1.33	1.05	0.25	83	83	71	1.40	1.94	77	0.015	96	95	80.6	-0.14	0.56		115.1	176.5	173.7	61.2	176.3	118	73	73	71		1.001	4.697	541
389	62.670	62.736		0.16	0.16	1.33	1.05	0.25	83	83	71	1.40	1.93	77	0.015	96	95	80.6	-0.03	0.58		114.8	176.2	173.4	61.3	176.0	116	72	73	71		1.001	4.859	558
390	62.831	62.897		0.16	0.16	1.33	1.05	0.25	83	83	71	1.40	1.94	77	0.015	96	95	80.7	0.13	0.54		114.5	176.0	173.2	61.3	175.8	115	72	73	71		1.001	4.535	520
391	62.993	63.059		0.16	0.16	1.33	1.04	0.25	83	83	71	1.40	1.92	77	0.014	100	99	80.6	0.01	0.52		114.3	175.8	172.9	61.3	175.5	115	72	73	71		1.001	4.373	500
392	63.154	63.220		0.16	0.16	1.33	1.05	0.25	83	83	71	1.40	1.94	77	0.014	99	98	80.6	0.04	0.58		114.0	175.5	172.6	61.3	175.3	114	72	72	71		1.001	4.859	555
393	63.315	63.381		0.16	0.16	1.32	1.05	0.25	83	83	71	1.40	1.92	77	0.014	99	98	80.7	-0.10	0.54		113.8	175.3	172.4	61.3	175.1	114	72	72	71		1.001	4.533	516
394	63.477	63.543		0.16	0.16	1.32	1.05	0.25	83	83	71	1.40	1.94	77	0.015	96	96	80.6	0.06	0.53		113.5	175.0	172.2	61.3	174.8	113	72	72	71		1.001	4.374	497
395	63.638	63.703		0.16	0.16	1.32	1.04	0.25	83	83	72	1.40	1.92	77	0.016	93	91	80.6	0.03	0.54		113.3	174.8	172.0	61.3	174.6	153	72	72	72		1.001	4.535	515
396	63.800	63.864		0.16	0.16	1.32	1.04	0.25	83	83	71	1.40	1.94	84	0.014	100	99	80.5	0.12	0.55		113.0	174.4	171.6	61.3	174.3	158	73	73	71		1.001	4.568	517
397	63.961	64.025		0.16	0.16	1.32	1.05	0.25	83	83	71	1.40	1.94	82	0.014	99	99	80.4	0.08	0.53		112.7	174.2	171.4	61.3	174.0	144	73	73	71		1.001	4.374	494
398	64.122	64.186		0.16	0.16	1.31	1.05	0.25	83	83	71	1.40	1.93	78	0.015	96	95	80.4	-0.04	0.56		112.6	174.0	171.2	61.2	173.8	135	73	73	71		1.001	4.699	530
399	64.284	64.347		0.16	0.16	1.32	1.05	0.25	83	83	71	1.40	1.93	77	0.012	107	106	80.5	-0.02	0.54		112.4	173.8	171.0	61.2	173.6	129	73	73	71		1.001	4.534	510
400	64.445	64.508		0.16	0.16	1.33	1.04	0.25	83	83	71	1.40	1.92	77	0.014	99	98	80.5	0.00	0.56		112.1	173.5	170.7	61.2	173.3	125	73	73	71		1.001	4.695	527
401	64.607	64.670		0.16	0.16	1.33	1.05	0.25	83	83	71	1.40	1.92	77	0.013	103	103	80.4	0.04	0.56		111.9	173.3	170.5	61.1	173.1	122	72	73	71		1.001	4.697	526
402	64.768	64.831		0.16	0.16	1.32	1.04	0.25	83	83	71	1.40	1.92	77	0.014	99	98	80.5	-0.04	0.54		111.8	173.1	170.4	61.1	172.9	120	72	72	71		1.001	4.538	508
403	64.930	64.992		0.16	0.16	1.32	1.04	0.25	83	83	71	1.40	1.92	77	0.011	112	111	80.4	0.08	0.56		111.6	172.9	170.1	61.0	172.7	119	72	72	71		1.001	4.694	525
404	65.091	65.153		0.16	0.16	1.32	1.05	0.25	83	83	71	1.40	1.94	77	0.013	103	102	80.4	-0.05	0.54		111.4	172.6	169.9	61.0	172.4	117	72	72	71		1.001	4.537	506
405	65.253	65.315		0.16	0.16	1.32	1.05	0.25	83	83	71	1.40	1.94	77	0.013	103	103	80.4	0.01	0.53		111.2	172.4	169.6	60.9	172.1	116	72	72	71		1.001	4.375	487
406	65.414	65.475		0.16	0.16	1.32	1.05	0.25	83	83	72	1.40	1.93	77	0.014	99	98	80.4	0.01	0.54		111.0	172.2	169.4	60.9	171.9	115	72	72	72		1.001	4.533	504
407	65.575	65.636		0.16	0.16	1.31	1.05	0.25	83	83	71	1.40	1.92	77	0.015	96	95	80.4	0.01	0.53		110.9	171.9	169.2	60.9	171.7	113	72	72	71		1.001	4.374	485
408	65.737	65.798		0.16	0.16	1.32	1.05	0.25	83	83	71	1.40	1.94	77	0.015	96	96	80.4	0.00	0.56		110.7	171.6	168.9	60.8	171.5	112	72	72	71		1.001	4.697	520
409	65.898	65.959		0.16	0.16	1.33	1.04	0.25	83	83	71	1.40	1.93	77	0.012	107	106	80.4	0.00	0.56		110.5	171.4	168.6	60.7	171.3	112	72	72	71		1.001	4.696	520
410	66.060	66.120		0.16	0.16	1.32	1.08	0.25	83	83	71	1.40	1.93	77	0.013	103	102	80.6	-0.18	0.54		110.2	171.2	168.4	60.7	170.9	111	72	72	71		1.001	4.535	500
411	66.221	66.284		0.16	0.16	1.32	1.08	0.25	83	83	71	1.40	1.94	77	0.013	103	104	80.4	0.15	0.54		110.1	171.0	168.2	60.6	170.8	110	72	72	71		1.001	4.536	500
412	66.383	66.448		0.16	0.16	1.32	1.09	0.25	83	83	71	1.40	1.94	77	0.015	96	97	80.5	-0.07	0.54		109.9	170.7	168.0	60.6	170.6	109	72	72	71		1.001	4.537	499
413	66.544	66.613		0.16	0.17	1.32	1.08	0.25	83	83	71	1.40	1.94	77	0.012	107	109	80.4	0.11	0.61		109.6	170.4	167.7	60.7	170.3	108	72	72	71		1.001	5.054	555
414	66.705	66.776		0.16	0.16	1.32	1.08	0.25	83	83	71	1.40	1.93	77	0.016	93	93	80.3	0.05	0.56		109.3	170.2	167.5	60.6	170.0	108	72	72	71		1.001	4.693	514
415	66.866	66.940		0.16	0.16	1.32	1.08	0.25	83	83	71	1.40	1.92	77	0.013	103	104	80.4	-0.10	0.58		109.0	169.9	167.1	60.7	169.7	107	72	72	71		1.001	4.861	531
416	67.027	67.104		0.16	0.16	1.31	1.08	0.25	83	83	71	1.40	1.93	77	0.013	103	104	80.5	-0.05	0.58		108.8	169.7	167.0	60.7	169.5	106	72	72	71		1.001	4.859	529
417	67.188	67.268		0.16	0.16	1.32	1.09	0.25	83	83	71	1.40	1.94	77	0.013	103	104	80.5	0.03	0.56		108.6	169.6	166.9	60.7	169.3	106	72	72	71		1.001	4.696	511
418	67.349	67.431		0.16	0.16	1.32	1.09	0.25	83	83	71	1.40	1.92	77	0.015	96	96	80.4	0.03	0.54		108.3	169.3	166.6	60.8	169.1	105	72	72	71		1.001	4.536	492
419	67.510	67.596		0.16	0.17	1.32	1.09	0.25	83	83	71	1.40	1.93	77	0.014	99	101	80.4	0.06	0.58		108.0	169.0	166.3	60.8	168.8	104	72	72	71		1.001	4.856	525
420	67.671	67.760		0.16	0.16	1.31	1.09	0.25	83	83	71	1.40	1.94	77	0.013	103	104	80.4	-0.06	0.58		107.7	168.7	166.1	60.9	168.6	104	72	72	71		1.001	4.858	524
421	67.832	67.924		0.16	0.16	1.32	1.08	0.25	83	83	71	1.40	1.92	77	0.013	103	104	80.5	-0.02	0.58		107.4	168.5	165.9	60.9	168.4	103	72	72	71		1.001	4.855	522
422	67.994	68.088		0.16	0.16	1.31	1.08	0.25	83	83	71	1.40	1.94	77	0.014	100	100	80.4	0.10	0.54		107.1	168.3	165.6	61.0	168.1	103	72	72	71		1.001	4.537	487
423	68.155	68.251		0.16	0.16	1.31	1.09	0.25	83	83	72	1.40	1.92	77	0.013	103	103	80.4	-0.05	0.52		106.8	168.0	165.3	61.0	167.8	102	72	72	72		1.001	4.372	468
424	68.316	68.415		0.16	0.16	1.31	1.08	0.25	83	83	72	1.40	1.94	77	0.013	103	104	80.3	0.11	0.51		106.6	167.9	165.2	61.1	167.7	102	72	72	72		1.001	4.211	449

Elapsed Time	Particulate Sampling Data																	Fuel Weight, lb		Flow, gpm		Temperature Data, oF									Stack			
	Gas Meter Cubic Feet (1)	Gas Meter Cubic Feet (2)	Gas Meter Cubic Feet (amb)	Sample Rate, cfm (1)	Sample Rate, cfm (2)	Orifice dH (1)	Orifice dH (2)	Orifice dH (amb)	Meter oF (1)	Meter oF (2)	Meter oF (amb)	Meter Vac. in. Hg. (1)	Meter Vac. in. Hg. (2)	Dilution Tunnel Temp.	Dilution Tunnel dP	Pro. Rate (%) (1)	Pro. Rate (%) (2)	Scale Reading	Weight Change	Load Side Liquid Flow Rate	Boiler Side Liquid Flow Rate (optional)	Thermopile ΔT	Boiler to Heat Exch. Temp.	Heat Exch to Boiler Temp.	Inlet Load Temp.	Outlet Load Temp.	Stack	Filter (1)	Filter (2)	Ambient		Specific Heat of Inlet Water (BTU/lb-°F)	Mass Flow Rate of Inlet Water (lb/min)	Heat Output, Btu
425	68.477	68.580		0.16	0.16	1.31	1.08	0.25	83	83	71	1.40	1.93	77	0.013	103	105	80.5	-0.22	0.58		106.3	167.6	164.9	61.1	167.4	101	72	72	71		1.001	4.859	517
426	68.638	68.744		0.16	0.16	1.31	1.08	0.25	83	83	71	1.40	1.94	77	0.015	96	97	80.4	0.09	0.56		106.0	167.4	164.7	61.2	167.2	135	72	72	71		1.001	4.697	499
427	68.799	68.908		0.16	0.16	1.31	1.07	0.25	83	83	71	1.50	1.93	78	0.015	96	97	80.2	0.24	0.54		105.7	167.0	164.4	61.2	166.9	142	73	72	71		1.001	4.539	480
428	68.960	69.071		0.16	0.16	1.31	1.08	0.25	83	83	71	1.50	1.93	82	0.013	103	104	80.4	-0.22	0.56		105.3	166.7	164.1	61.3	166.6	135	73	73	71		1.001	4.695	495
429	69.121	69.235		0.16	0.16	1.32	1.08	0.25	83	83	71	1.40	1.92	78	0.013	103	104	80.3	0.10	0.56		105.0	166.5	163.9	61.3	166.3	126	72	73	71		1.001	4.699	494
430	69.282	69.398		0.16	0.16	1.32	1.08	0.25	83	83	71	1.40	1.93	77	0.014	99	100	80.2	0.09	0.55		104.8	166.3	163.7	61.4	166.2	120	72	73	71		1.001	4.595	482
431	69.443	69.563		0.16	0.17	1.32	1.08	0.25	83	83	71	1.40	1.94	77	0.012	107	109	80.2	0.00	0.53		104.5	166.1	163.4	61.4	165.9	116	72	73	71		1.001	4.405	461
432	69.604	69.727		0.16	0.16	1.32	1.08	0.25	83	83	71	1.40	1.92	77	0.014	99	100	80.3	-0.06	0.54		104.3	165.8	163.2	61.4	165.7	113	72	72	71		1.001	4.535	473
433	69.765	69.891		0.16	0.16	1.32	1.08	0.25	83	83	71	1.40	1.93	77	0.013	103	104	80.3	-0.02	0.58		104.0	165.6	163.0	61.4	165.4	111	72	72	71		1.001	4.859	506
434	69.926	70.055		0.16	0.16	1.32	1.09	0.25	83	83	72	1.40	1.92	77	0.014	99	100	80.2	0.06	0.54		103.8	165.4	162.8	61.4	165.2	109	72	72	72		1.001	4.536	471
435	70.088	70.218		0.16	0.16	1.32	1.09	0.25	83	83	72	1.40	1.93	77	0.013	103	103	80.2	-0.02	0.53		103.5	165.1	162.6	61.4	165.0	107	72	72	72		1.001	4.373	453
436	70.249	70.382		0.16	0.16	1.32	1.08	0.25	83	83	72	1.40	1.94	77	0.014	99	100	80.1	0.12	0.56		103.3	164.9	162.3	61.4	164.7	106	72	72	72		1.001	4.696	486
437	70.410	70.547		0.16	0.16	1.31	1.09	0.25	83	83	71	1.40	1.94	77	0.012	107	109	80.3	-0.18	0.54		103.1	164.6	162.0	61.4	164.5	105	72	72	71		1.001	4.530	467
438	70.571	70.711		0.16	0.16	1.31	1.08	0.25	83	83	71	1.40	1.92	77	0.013	103	104	80.2	0.07	0.56		102.9	164.4	161.8	61.3	164.2	104	72	72	71		1.001	4.695	484
439	70.732	70.875		0.16	0.16	1.31	1.08	0.25	83	83	72	1.40	1.94	77	0.014	99	100	80.3	-0.02	0.56		102.7	164.1	161.6	61.3	164.0	104	72	72	72		1.001	4.696	483
440	70.893	71.038		0.16	0.16	1.32	1.08	0.25	83	83	72	1.40	1.92	77	0.012	107	108	80.2	0.11	0.56		102.5	163.9	161.3	61.3	163.7	103	72	72	72		1.001	4.694	482
441	71.054	71.202		0.16	0.16	1.32	1.09	0.25	83	83	71	1.40	1.94	77	0.015	96	97	80.2	-0.06	0.56		102.3	163.7	161.2	61.2	163.6	103	72	72	71		1.001	4.695	481
442	71.215	71.366		0.16	0.16	1.32	1.08	0.25	83	83	72	1.40	1.93	77	0.013	103	104	80.3	-0.05	0.54		102.1	163.5	160.9	61.2	163.3	102	72	72	72		1.001	4.533	463
443	71.376	71.530		0.16	0.16	1.32	1.08	0.25	83	83	72	1.40	1.93	77	0.012	107	108	80.2	0.02	0.53		101.9	163.2	160.6	61.1	163.0	101	72	72	72		1.001	4.376	446
444	71.537	71.695		0.16	0.16	1.32	1.08	0.25	83	83	72	1.40	1.93	77	0.011	112	114	80.2	0.01	0.58		101.7	162.9	160.4	61.1	162.7	101	72	72	72		1.001	4.848	493
445	71.699	71.858		0.16	0.16	1.32	1.08	0.25	83	83	71	1.40	1.93	77	0.013	103	103	80.2	-0.01	0.55		101.5	162.7	160.2	61.0	162.5	100	72	72	71		1.001	4.557	463
446	71.860	72.022		0.16	0.16	1.32	1.08	0.25	83	83	71	1.40	1.92	77	0.013	103	104	80.3	-0.05	0.54		101.3	162.4	159.9	61.0	162.3	100	72	72	71		1.001	4.536	460
447	72.021	72.185		0.16	0.16	1.32	1.08	0.25	83	83	71	1.40	1.93	77	0.015	96	96	80.3	0.01	0.56		101.1	162.2	159.7	61.0	162.1	99	72	72	71		1.001	4.697	475
448	72.182	72.350		0.16	0.16	1.32	1.09	0.25	83	83	71	1.40	1.93	77	0.015	96	97	80.3	-0.04	0.54		100.9	162.0	159.5	60.9	161.9	98	72	72	71		1.001	4.532	458
449	72.343	72.514		0.16	0.16	1.32	1.09	0.25	83	83	71	1.40	1.92	77	0.015	96	97	80.2	0.14	0.56		100.7	161.7	159.2	60.9	161.6	127	72	72	71		1.001	4.697	473
450	72.504	72.678		0.16	0.16	1.31	1.08	0.25	83	83	71	1.40	1.94	81	0.013	103	104	80.2	-0.02	0.49		100.4	161.5	159.0	61.0	161.4	145	73	73	71		1.001	4.049	407
451	72.665	72.841		0.16	0.16	1.32	1.07	0.25	83	83	71	1.50	1.92	83	0.011	112	113	79.9	0.26	0.52		100.1	161.2	158.7	61.0	161.1	157	73	73	71		1.001	4.373	438
452	72.826	73.004		0.16	0.16	1.32	1.08	0.25	83	83	71	1.50	1.94	83	0.014	99	100	79.9	0.08	0.54		99.8	161.0	158.5	61.0	160.8	168	73	73	71		1.001	4.536	453
453	72.987	73.168		0.16	0.16	1.32	1.08	0.25	83	83	72	1.40	1.94	84	0.013	103	105	79.8	0.10	0.56		99.6	160.8	158.4	61.0	160.7	182	73	73	72		1.001	4.693	468
454	73.148	73.332		0.16	0.16	1.32	1.08	0.25	83	83	71	1.40	1.94	86	0.013	103	105	79.4	0.33	0.54		99.4	160.7	158.2	61.1	160.5	199	73	73	71		1.001	4.534	451
455	73.309	73.496		0.16	0.16	1.32	1.09	0.25	83	83	72	1.40	1.94	89	0.012	108	109	79.2	0.25	0.52		99.3	160.7	158.2	61.1	160.4	214	73	73	72		1.001	4.372	435
456	73.470	73.659		0.16	0.16	1.32	1.08	0.25	83	83	71	1.50	1.92	91	0.015	97	98	78.9	0.27	0.54		99.3	160.6	158.1	61.2	160.4	227	73	73	71		1.001	4.531	450
457	73.631	73.823		0.16	0.16	1.32	1.08	0.25	83	83	71	1.40	1.94	92	0.015	97	98	78.5	0.40	0.56		99.3	160.8	158.3	61.2	160.5	239	73	74	71		1.001	4.690	466
458	73.792	73.986		0.16	0.16	1.32	1.08	0.25	83	83	71	1.50	1.93	93	0.014	100	101	78.2	0.26	0.51		99.5	161.0	158.5	61.2	160.7	254	74	74	71		1.001	4.213	419
459	73.953	74.150		0.16	0.16	1.32	1.08	0.25	83	83	71	1.50	1.95	95	0.013	104	106	77.8	0.49	0.52		99.8	161.4	158.8	61.3	161.0	267	74	74	71		1.001	4.367	436
460	74.114	74.313		0.16	0.16	1.31	1.08	0.25	83	83	71	1.50	1.95	97	0.014	101	101	77.5	0.24	0.58		100.2	161.9	159.3	61.3	161.5	279	74	74	71		1.001	4.854	487
461	74.274	74.477		0.16	0.16	1.32	1.08	0.25	83	83	71	1.50	1.94	98	0.015	97	99	77.2	0.34	0.54		101.0	162.8	160.2	61.3	162.3	289	74	74	71		1.001	4.478	453
462	74.435	74.639		0.16	0.16	1.32	1.08	0.25	83	83	71	1.50	1.95	100	0.015	98	98	76.7	0.51	0.57		101.7	163.6	161.0	61.3	163.0	298	75	75	71		1.001	4.761	485
463	74.595	74.802		0.16	0.16	1.31	1.08	0.25	83	83	71	1.50	1.95	102	0.013	104	106	76.2	0.49	0.55		102.6	164.5	161.8	61.4	163.9	306	75	75	71		1.001	4.576	470
464	74.756	74.965		0.16	0.16	1.31	1.08	0.25	83	83	71	1.50	1.94	103	0.014	101	102	75.9	0.28	0.58		103.5	165.4	162.7	61.4	164.9	311	75	75	71		1.001	4.862	504
465	74.917	75.128		0.16	0.16	1.31	1.08	0.25	83	83	71	1.50	1.94	104	0.013	105	106	75.2	0.66	0.54		104.4	166.4	163.6	61.4	165.8	313	75	75	71		1.001	4.532	474
466	75.077	75.291		0.16	0.16	1.32	1.07	0.25	83	83	71	1.50	1.96	104	0.014	101	102	74.8	0.46	0.56		105.3	167.3	164.5	61.5	166.8	316	75	76	71		1.001	4.694	495
467	75.237	75.453		0.16	0.16	1.31	1.07	0.25	83	83	71	1.50	1.96	104	0.014	101	101	74.3	0.54	0.56		106.3	168.3	165.6	61.5	167.8	320	76	76	71		1.001	4.692	499
468	75.397	75.616		0.16	0.16	1.31	1.07	0.25	83	83	71	1.50	1.96	105	0.012	109	110	73.6	0.67	0.51		107.2	169.3	166.5	61.4	168.7	324	76	76	71		1.001	4.207	452
469	75.558	75.778		0.16	0.16	1.31	1.07	0.25	83	83	71	1.50	1.96	106	0.014	102	102	73.2	0.36	0.60		108.3	170.2	167.5	61.4	169.6	330	76	76	71		1.001	5.018	544
470	75.718	75.941		0.16	0.16	1.31	1.07	0.25	83	83	72	1.50	1.96	107	0.014	101	102	72.6	0.57	0.54		109.2	171.3	168.4	61.4	170.6	337	76	77	72		1.001	4.531	495
471	75.877	76.103		0.16	0.16	1.31	1.07	0.25	83	83	71	1.50	1.97	109	0.014	101	102	72.1	0.54	0.58		110.5	172.7	169.6	61.3	171.8	343	77	77	71		1.001	4.857	537
472	76.038	76.265		0.16	0.16	1.32	1.07	0.25	83	83	71	1.50	1.96	110	0.012	110	110	71.6	0.54	0.58		111.9	173.8	170.9	61.2	173.1	346	77	77	71		1.001	4.857	544
473	76.198	76.427		0.16	0.16	1.31	1.07	0.25	83	83	71	1.50	1.96	110	0.015	98	99	70.9	0.68	0.52		113.2	175.0	172.1	61.2	174.4	348	77	77	71		1.001	4.367	495
474	76.358	76.589		0.16	0.16	1.31	1.07	0.25	83	83	71	1.50	1.96	111	0.012	109	110	70.2	0.64	0.58		114.1	175.8	172.9	61.1	175.3	350	77	77	71		1.001	4.854	555
475	76.518	76.751		0.16	0.16	1.31	1.06	0.25	83	83	71	1.50	1.97	111	0.013	105	106	69.7	0.58	0.52		115.3	177.0	174.0	61.1	176.3	353	77	78	71		1.001	4.371	504
476	76.678	76.912		0.16	0.16	1.31	1.06	0.25	83	83	71	1.50	1.98	112	0.015	98	98	69.0	0.63	0.54		116.3	178.0	175.0	61.0	177.4	357	78	78	71		1.001	4.530	528
477	76.839	77.074		0.16	0.16	1.31	1.06	0.25	83	83	71	1.50	1.98	113	0.015	99	99	68.5	0.51	0.56		117.6	179.3	176.2	61.0	178.6	360	78	78	71		1.001	4.691	552
478	76.998	77.236		0.16	0.16	1.31	1.06	0.25	83	83	71	1.50	1.98	113	0.012	109	110	67.8	0.72	0.52		118.7	180.3	177.2	61.0	179.7	364	78	78	71		1.001	4.364	519
479	77.158	77.397		0.16	0.16	1.30	1.05	0.25	83	83	72	1.50	1.98	114	0.013	105	106	67.2	0.63	0.54		120.0	181.6	178.5	61.0	180.9	367	78	78	72		1.001	4.528	544
480	77.318	77.558		0.16	0.16	1.30	1.06	0.25	83	83	71	1.50	1.97	115	0.013	106	106	66.8	0.39	0.58		121.1	182.9	179.7	61.0	182.1	368	79	79	71		1.001	4.851	588
481	77.478	77.719		0.16	0.16	1.30	1.06	0.25	83	83	72	1.50	1.97	115	0.013	106	106	66.4	0.41	0.56		122.4	184.1	180.9	61.0	183.4	338	79	79	72		1.001	4.693	575
482	77.637	77.881		0.16	0.16	1.31	1.06	0.25	83	83	72	1.50	1.96	98	0.013	103	105	66.1	0.28	0.54		123.3	184.9	181.8	61.0	184.3	311	78	78	72		1.001	4.529	559
483	77.798	78.042		0.16	0.16	1.31	1.06	0.25	83	83	71	1.50	1.96	91	0.014	100	100	66.0	0.13	0.56		124.0	185.4	182.3	61.1	185.0	294	78	78	71		1.001	4.691	582
484	77.958	78.204		0.16	0.16	1.30	1.07	0.25	83	83	72	1.50	1.96	87	0.014	99	100	65.9	0.06	0.54		124.3	185.9	182.8	61.1	185.4	281	77	77	72		1.001	4.531	564
485	78.118	78.366		0.16	0.16	1.31	1.07	0.25	83	83	72	1.50	1.96	85	0.013	103	104	65.8	0.07	0.58		124.7	186.3	183.2	61.1	185.8	269	77	77	72		1.001	4.850	605
486	78.278	78.530		0.16	0.16	1.31	1.07	0.25	83	83	72	1.50	1.94	84	0.013	103	105	65.7	0.11	0.58		124.9	186.4	183.3	61.2	186.1	260	77	77	72		1.001	4.854	607

Elapsed Time	Particulate Sampling Data																	Fuel Weight, lb		Flow, gpm		Temperature Data, oF									Stack			
	Gas Meter Cubic Feet (1)	Gas Meter Cubic Feet (2)	Gas Meter Cubic Feet (amb)	Sample Rate, cfm (1)	Sample Rate, cfm (2)	Orifice dH (1)	Orifice dH (2)	Orifice dH (amb)	Meter oF (1)	Meter oF (2)	Meter oF (amb)	Meter Vac. in. Hg. (1)	Meter Vac. in. Hg. (2)	Dilution Tunnel Temp.	Dilution Tunnel dP	Pro. Rate (%) (1)	Pro. Rate (%) (2)	Scale Reading	Weight Change	Load Side Liquid Flow Rate	Boiler Side Liquid Flow Rate (optional)	Thermopile ΔT	Boiler to Heat Exch. Temp.	Heat Exch to Boiler Temp.	Inlet Load Temp.	Outlet Load Temp.	Stack	Filter (1)	Filter (2)	Ambient		Specific Heat of Inlet Water (BTU/lb-°F)	Mass Flow Rate of Inlet Water (lb/min)	Heat Output, Btu
487	78.439	78.692		0.16	0.16	1.31	1.06	0.25	83	83	71	1.50	1.96	83	0.014	99	100	65.7	-0.03	0.54		125.2	186.7	183.6	61.2	186.4	252	77	77	71		1.001	4.529	568
488	78.599	78.854		0.16	0.16	1.31	1.07	0.25	83	83	72	1.50	1.95	83	0.013	103	103	65.6	0.11	0.54		125.3	186.8	183.8	61.3	186.5	244	77	77	72		1.001	4.532	568
489	78.760	79.017		0.16	0.16	1.31	1.07	0.25	83	83	71	1.50	1.95	82	0.012	107	108	65.6	0.03	0.56		125.3	186.8	183.7	61.3	186.5	238	77	76	71		1.001	4.692	588
490	78.921	79.180		0.16	0.16	1.31	1.07	0.25	83	83	72	1.50	1.95	82	0.012	107	108	65.7	-0.06	0.53		125.2	186.8	183.7	61.3	186.5	232	76	76	72		1.001	4.375	549
491	79.081	79.343		0.16	0.16	1.31	1.07	0.25	83	83	71	1.50	1.95	81	0.012	107	108	65.5	0.19	0.54		125.2	186.8	183.7	61.3	186.5	227	76	76	71		1.001	4.527	567
492	79.242	79.506		0.16	0.16	1.31	1.06	0.25	83	83	71	1.50	1.96	81	0.013	103	104	65.6	-0.16	0.52		125.1	186.7	183.6	61.3	186.4	222	76	76	71		1.001	4.355	545
493	79.402	79.668		0.16	0.16	1.31	1.07	0.25	83	83	71	1.50	1.94	81	0.014	99	99	65.6	0.03	0.54		125.0	186.6	183.5	61.4	186.3	220	76	76	71		1.001	4.529	567
494	79.563	79.831		0.16	0.16	1.31	1.07	0.25	83	83	72	1.50	1.95	79	0.013	103	104	65.5	0.11	0.58		124.8	186.5	183.4	61.4	186.2	217	76	76	72		1.001	4.855	607
495	79.724	79.994		0.16	0.16	1.31	1.06	0.25	83	83	72	1.50	1.95	79	0.015	96	96	65.5	-0.02	0.56		124.7	186.4	183.2	61.4	186.0	212	76	76	72		1.001	4.659	582
496	79.885	80.157		0.16	0.16	1.31	1.07	0.25	83	83	72	1.50	1.96	78	0.013	103	103	65.4	0.08	0.54		124.5	186.2	183.1	61.4	185.9	209	75	75	72		1.001	4.533	565
497	80.046	80.319		0.16	0.16	1.30	1.07	0.25	83	83	72	1.50	1.94	78	0.013	103	103	65.5	-0.04	0.51		124.5	186.1	183.0	61.4	185.9	205	75	75	72		1.001	4.208	524
498	80.206	80.481		0.16	0.16	1.31	1.07	0.25	83	83	71	1.50	1.95	78	0.015	95	96	65.6	-0.12	0.54		124.2	185.9	182.8	61.4	185.6	200	75	75	71		1.001	4.532	564
499	80.367	80.644		0.16	0.16	1.31	1.07	0.25	83	83	72	1.50	1.96	78	0.013	103	103	65.6	0.02	0.54		124.1	185.8	182.7	61.4	185.5	197	75	75	72		1.001	4.530	563
500	80.527	80.808		0.16	0.16	1.30	1.07	0.25	83	83	72	1.50	1.95	78	0.013	102	104	65.7	-0.08	0.58		123.7	185.5	182.4	61.5	185.2	194	75	75	72		1.001	4.853	601
501	80.688	80.971		0.16	0.16	1.31	1.07	0.25	83	83	72	1.50	1.94	78	0.015	96	96	65.5	0.13	0.56		123.6	185.3	182.3	61.5	185.1	190	75	75	72		1.001	4.695	581
502	80.849	81.133		0.16	0.16	1.30	1.07	0.25	83	83	72	1.50	1.95	78	0.015	96	96	65.6	-0.03	0.56		123.5	185.2	182.1	61.5	184.9	187	75	75	72		1.001	4.693	580
503	81.009	81.296		0.16	0.16	1.30	1.07	0.25	83	83	71	1.50	1.96	78	0.014	98	100	65.6	-0.07	0.56		123.3	185.0	182.0	61.5	184.8	184	74	74	71		1.001	4.696	580
504	81.170	81.459		0.16	0.16	1.31	1.07	0.25	83	83	72	1.50	1.95	78	0.013	103	103	65.6	-0.01	0.56		123.1	184.9	181.9	61.5	184.6	181	74	74	72		1.001	4.692	578
505	81.330	81.622		0.16	0.16	1.31	1.07	0.25	83	83	72	1.50	1.94	78	0.013	102	103	65.5	0.08	0.56		122.9	184.7	181.6	61.5	184.4	178	74	74	72		1.001	4.693	578
506	81.491	81.784		0.16	0.16	1.30	1.07	0.25	83	83	72	1.50	1.96	78	0.013	103	103	65.5	0.09	0.58		122.9	184.5	181.6	61.4	184.3	175	74	74	72		1.001	4.856	597
507	81.651	81.947		0.16	0.16	1.31	1.06	0.25	83	83	72	1.50	1.94	78	0.014	98	100	65.5	-0.08	0.54		122.7	184.4	181.4	61.4	184.1	172	74	74	72		1.001	4.533	557
508	81.812	82.110		0.16	0.16	1.31	1.07	0.25	83	83	72	1.50	1.94	78	0.013	103	103	65.6	-0.03	0.56		122.6	184.2	181.2	61.4	184.0	169	74	74	72		1.001	4.695	576
509	81.973	82.273		0.16	0.16	1.31	1.07	0.25	83	83	71	1.50	1.94	78	0.013	103	103	65.6	-0.06	0.60		122.5	184.2	181.2	61.3	183.9	167	74	74	71		1.001	5.006	614
510	82.133	82.436		0.16	0.16	1.31	1.07	0.25	83	83	72	1.50	1.95	77	0.011	111	112	65.6	0.08	0.57		122.4	183.9	180.9	61.3	183.6	164	74	74	72		1.001	4.726	579
511	82.294	82.598		0.16	0.16	1.32	1.07	0.25	83	83	72	1.50	1.96	77	0.015	96	96	65.6	-0.05	0.58		122.3	183.8	180.8	61.2	183.5	162	74	74	72		1.001	4.858	595
512	82.454	82.761		0.16	0.16	1.32	1.07	0.25	83	83	72	1.50	1.95	77	0.014	98	100	65.6	0.06	0.56		122.1	183.6	180.5	61.2	183.3	159	74	74	72		1.001	4.692	574
513	82.615	82.924		0.16	0.16	1.31	1.07	0.25	83	83	72	1.50	1.94	78	0.014	99	100	65.6	-0.09	0.54		122.0	183.5	180.5	61.2	183.2	157	74	74	72		1.001	4.531	554
514	82.776	83.087		0.16	0.16	1.31	1.07	0.25	83	83	72	1.50	1.96	78	0.014	99	100	65.6	0.03	0.56		121.7	183.2	180.1	61.2	182.9	155	74	74	72		1.001	4.692	572
515	82.936	83.250		0.16	0.16	1.31	1.07	0.25	83	83	72	1.50	1.96	77	0.013	102	103	65.5	0.14	0.52		121.6	183.0	179.9	61.1	182.7	153	74	74	72		1.001	4.370	532
516	83.097	83.412		0.16	0.16	1.31	1.07	0.25	83	83	71	1.50	1.94	77	0.014	99	99	65.6	-0.11	0.54		121.4	182.8	179.8	61.1	182.5	151	73	73	71		1.001	4.530	551
517	83.258	83.575		0.16	0.16	1.32	1.07	0.25	83	83	72	1.50	1.94	77	0.014	99	100	65.6	0.00	0.54		121.4	182.7	179.7	61.1	182.4	149	73	73	72		1.001	4.534	551
518	83.418	83.738		0.16	0.16	1.31	1.07	0.25	83	83	72	1.50	1.94	77	0.014	98	100	65.5	0.14	0.56		121.2	182.5	179.5	61.1	182.3	147	73	73	72		1.001	4.691	569
519	83.579	83.901		0.16	0.16	1.31	1.07	0.25	83	83	72	1.50	1.94	77	0.014	99	100	65.6	-0.15	0.54		120.8	182.2	179.2	61.1	181.9	145	73	73	72		1.001	4.529	548
520	83.740	84.064		0.16	0.16	1.31	1.07	0.25	83	83	72	1.50	1.95	77	0.013	103	103	65.6	-0.01	0.54		120.6	181.9	179.0	61.1	181.7	144	73	73	72		1.001	4.530	547
521	83.901	84.226		0.16	0.16	1.32	1.06	0.25	83	83	72	1.50	1.95	77	0.015	96	96	65.7	-0.07	0.54		120.3	181.8	178.8	61.2	181.5	142	73	73	72		1.001	4.532	546
522	84.062	84.389		0.16	0.16	1.31	1.07	0.25	83	83	72	1.50	1.94	77	0.013	103	103	65.6	0.06	0.60		120.1	181.5	178.6	61.2	181.3	140	73	73	72		1.001	5.013	603
523	84.223	84.552		0.16	0.16	1.31	1.07	0.25	83	83	72	1.50	1.95	77	0.014	99	100	65.5	0.11	0.56		119.8	181.3	178.4	61.3	181.1	167	73	73	72		1.001	4.683	562
524	84.383	84.715		0.16	0.16	1.30	1.06	0.25	83	83	72	1.50	1.96	85	0.015	96	97	65.3	0.21	0.54		119.6	181.1	178.2	61.3	180.9	191	74	74	72		1.001	4.531	543
525	84.543	84.877		0.16	0.16	1.31	1.07	0.25	83	83	72	1.50	1.95	88	0.014	99	100	65.1	0.18	0.53		119.3	180.8	177.9	61.3	180.6	174	74	74	72		1.001	4.406	526
526	84.704	85.040		0.16	0.16	1.31	1.07	0.25	83	83	72	1.50	1.95	80	0.013	103	104	65.2	-0.08	0.56		119.1	180.6	177.7	61.4	180.5	163	73	73	72		1.001	4.689	559
527	84.865	85.203		0.16	0.16	1.31	1.08	0.25	83	83	72	1.50	1.94	78	0.013	103	103	65.1	0.13	0.54		118.9	180.6	177.6	61.4	180.3	156	73	73	72		1.001	4.527	539
528	85.026	85.367		0.16	0.16	1.31	1.07	0.25	83	83	72	1.50	1.94	78	0.012	107	108	65.1	-0.04	0.56		118.7	180.3	177.4	61.4	180.1	150	73	73	72		1.001	4.695	558
529	85.187	85.531		0.16	0.16	1.31	1.08	0.25	83	83	72	1.50	1.94	77	0.012	107	108	65.2	-0.02	0.58		118.4	180.1	177.1	61.4	179.8	146	73	73	72		1.001	4.854	576
530	85.347	85.694		0.16	0.16	1.31	1.07	0.25	83	83	72	1.50	1.94	77	0.014	98	100	65.2	0.00	0.54		118.2	179.9	177.0	61.4	179.6	144	73	73	72		1.001	4.535	537
531	85.508	85.857		0.16	0.16	1.31	1.07	0.25	83	83	72	1.50	1.93	77	0.013	103	103	65.1	0.03	0.56		117.9	179.7	176.8	61.5	179.4	141	73	73	72		1.001	4.694	554
532	85.669	86.020		0.16	0.16	1.31	1.08	0.25	83	83	72	1.50	1.94	77	0.016	93	93	65.1	0.02	0.54		117.7	179.4	176.6	61.5	179.2	139	73	73	72		1.001	4.533	534
533	85.830	86.183		0.16	0.16	1.31	1.08	0.25	83	83	72	1.50	1.95	77	0.014	99	100	65.2	-0.06	0.54		117.5	179.2	176.3	61.5	179.0	137	73	73	72		1.001	4.531	533
534	85.990	86.348		0.16	0.16	1.32	1.07	0.25	83	83	72	1.50	1.95	77	0.014	98	101	65.1	0.09	0.54		117.3	179.0	176.2	61.5	178.8	135	73	73	72		1.001	4.530	532
535	86.151	86.510		0.16	0.16	1.31	1.08	0.25	83	83	72	1.50	1.94	77	0.012	107	107	65.2	-0.13	0.54		117.1	178.8	175.9	61.5	178.6	134	73	73	72		1.001	4.530	531
536	86.312	86.673		0.16	0.16	1.32	1.07	0.25	83	83	71	1.50	1.94	77	0.014	99	100	65.1	0.09	0.54		116.9	178.6	175.7	61.5	178.4	132	73	73	71		1.001	4.533	530
537	86.473	86.837		0.16	0.16	1.32	1.08	0.25	83	83	72	1.50	1.95	77	0.015	96	97	65.1	-0.01	0.54		116.6	178.3	175.5	61.5	178.1	130	73	73	72		1.001	4.534	529
538	86.634	87.000		0.16	0.16	1.31	1.08	0.25	83	83	72	1.50	1.94	77	0.014	99	100	65.2	-0.05	0.56		116.4	178.1	175.2	61.5	177.9	129	73	73	72		1.001	4.692	547
539	86.795	87.164		0.16	0.16	1.31	1.07	0.25	83	83	72	1.50	1.94	77	0.013	103	104	65.0	0.11	0.56		116.3	177.9	175.1	61.4	177.7	128	73	73	72		1.001	4.692	546
540	86.956	87.327		0.16	0.16	1.31	1.07	0.25	83	83	72	1.50	1.94	77	0.015	96	96	65.2	-0.11	0.57		116.2	177.7	174.9	61.3	177.6	126	73	73	72		1.001	4.710	548
541	87.116	87.490		0.16	0.16	1.32	1.08	0.25	83	83	71	1.50	1.93	77	0.013	102	103	65.2	-0.01	0.56		116.0	177.5	174.6	61.3	177.3	125	73	73	71		1.001	4.669	542
542	87.278	87.654		0.16	0.16	1.31	1.08	0.25	83	83	72	1.50	1.95	77	0.015	96	97	65.2	-0.03	0.54		115.9	177.3	174.5	61.2	177.1	124	73	73	72		1.001	4.531	526
543	87.438	87.817		0.16	0.16	1.32	1.08	0.25	83	83	72	1.50	1.93	77	0.014	98	100	65.2	0.02	0.54		115.6	177.0	174.1	61.2	176.8	123	73	73	72		1.001	4.531	525
544	87.599	87.981		0.16	0.16	1.32	1.08	0.25	83	83	72	1.50	1.93	77	0.015	96	97	65.2	-0.04	0.58		115.4	176.7	174.0	61.2	176.6	122	73	73	72		1.001	4.857	561
545	87.760	88.144		0.16	0.16	1.31	1.08	0.25	83	83	72	1.50	1.95	77	0.013	103	103	65.1	0.12	0.56		115.2	176.5	173.7	61.1	176.4	120	73	73	72		1.001	4.695	542
546	87.921	88.307		0.16	0.16	1.31	1.08	0.25	83	83	72	1.50	1.94	77	0.014	99	100	65.3	-0.15	0.51		115.0	176.3	173.5	61.1	176.1	120	73	73	72		1.001	4.214	485
547	88.082	88.470		0.16	0.16	1.31	1.08	0.25	83	83	72	1.50	1.94	77	0.014	99	100	65.2	0.09	0.56		114.8	176.1	173.3	61.1	175.9	119	73	73	72		1.001	4.694	540
548	88.243	88.634		0.16	0.16	1.32	1.08	0.25	83	83	72	1.50	1.93	77	0.014	99	100	65.2	-0.05	0.54		114.6	175.9	173.1	61.1	175.6	118	73	73	72		1.001	4.536	520

Elapsed Time	Particulate Sampling Data																	Fuel Weight, lb		Flow, gpm		Temperature Data, oF									Stack			
	Gas Meter Cubic Feet (1)	Gas Meter Cubic Feet (2)	Gas Meter Cubic Feet (amb)	Sample Rate, cfm (1)	Sample Rate, cfm (2)	Orifice dH (1)	Orifice dH (2)	Orifice dH (amb)	Meter oF (1)	Meter oF (2)	Meter oF (amb)	Meter Vac. in. Hg. (1)	Meter Vac. in. Hg. (2)	Dilution Tunnel Temp.	Dilution Tunnel dP	Pro. Rate (%) (1)	Pro. Rate (%) (2)	Scale Reading	Weight Change	Load Side Liquid Flow Rate	Boiler Side Liquid Flow Rate (optional)	Thermopile ΔT	Boiler to Heat Exch. Temp.	Heat Exch to Boiler Temp.	Inlet Load Temp.	Outlet Load Temp.	Stack	Filter (1)	Filter (2)	Ambient		Specific Heat of Inlet Water (BTU/lb-°F)	Mass Flow Rate of Inlet Water (lb/min)	Heat Output, Btu
549	88.404	88.797		0.16	0.16	1.31	1.08	0.25	83	83	72	1.50	1.95	77	0.014	99	100	65.2	-0.03	0.56		114.4	175.6	172.8	61.0	175.4	117	73	73	72		1.001	4.692	537
550	88.565	88.961		0.16	0.16	1.31	1.08	0.25	83	83	72	1.50	1.94	77	0.014	99	100	65.1	0.09	0.54		114.1	175.3	172.5	61.0	175.2	116	73	73	72		1.001	4.536	518
551	88.726	89.124		0.16	0.16	1.31	1.07	0.25	83	83	72	1.50	1.93	77	0.015	96	96	65.3	-0.16	0.54		113.8	175.1	172.3	61.1	174.9	115	73	73	72		1.001	4.536	517
552	88.887	89.287		0.16	0.16	1.32	1.08	0.25	83	83	72	1.50	1.94	77	0.012	107	108	65.2	0.08	0.58		113.5	174.8	172.1	61.1	174.6	114	73	73	72		1.001	4.853	551
553	89.048	89.450		0.16	0.16	1.31	1.08	0.25	83	83	72	1.50	1.93	77	0.014	99	100	65.2	-0.01	0.56		113.3	174.7	171.9	61.2	174.5	113	73	73	72		1.001	4.694	532
554	89.209	89.614		0.16	0.16	1.32	1.08	0.25	83	83	72	1.50	1.94	77	0.015	96	97	65.2	0.04	0.54		113.0	174.4	171.6	61.2	174.2	113	73	73	72		1.001	4.539	513
555	89.370	89.778		0.16	0.16	1.32	1.08	0.25	83	83	72	1.50	1.93	77	0.013	103	104	64.9	0.25	0.54		112.7	174.2	171.4	61.3	174.0	154	73	73	72		1.001	4.531	511
556	89.530	89.941		0.16	0.16	1.31	1.06	0.25	83	83	72	1.50	1.94	85	0.014	99	100	65.0	-0.01	0.54		112.3	173.8	171.1	61.3	173.6	157	73	73	72		1.001	4.487	505
557	89.691	90.103		0.16	0.16	1.31	1.08	0.25	83	83	72	1.50	1.94	81	0.013	103	103	64.9	0.01	0.55		112.1	173.6	170.8	61.3	173.4	143	73	73	72		1.001	4.606	517
558	89.852	90.266		0.16	0.16	1.32	1.07	0.25	83	83	72	1.50	1.95	78	0.015	96	96	64.8	0.11	0.57		111.9	173.4	170.7	61.3	173.2	134	73	73	72		1.001	4.713	526
559	90.013	90.429		0.16	0.16	1.31	1.05	0.25	83	83	72	1.50	1.95	77	0.013	103	103	64.8	0.00	0.56		111.7	173.2	170.5	61.4	173.0	128	73	73	72		1.001	4.697	525
560	90.174	90.594		0.16	0.16	1.31	1.07	0.25	83	83	72	1.40	1.94	77	0.014	99	101	65.0	-0.12	0.54		111.4	173.0	170.3	61.4	172.8	125	73	73	72		1.001	4.531	506
561	90.335	90.757		0.16	0.16	1.31	1.08	0.25	83	83	71	1.40	1.93	77	0.014	99	100	64.9	0.08	0.56		111.1	172.7	170.0	61.4	172.5	122	73	73	71		1.001	4.695	522
562	90.495	90.920		0.16	0.16	1.31	1.07	0.25	83	83	72	1.50	1.95	77	0.013	102	103	64.9	-0.05	0.54		110.9	172.4	169.7	61.4	172.3	121	73	73	72		1.001	4.536	504
563	90.656	91.083		0.16	0.16	1.31	1.06	0.25	83	83	72	1.50	1.94	77	0.015	96	96	64.8	0.16	0.56		110.6	172.2	169.4	61.4	172.0	119	73	73	72		1.001	4.694	520
564	90.817	91.246		0.16	0.16	1.30	1.07	0.25	83	83	72	1.50	1.93	77	0.013	103	103	64.9	-0.09	0.51		110.4	172.0	169.3	61.4	171.8	117	73	73	72		1.001	4.212	466
565	90.977	91.410		0.16	0.16	1.31	1.08	0.25	83	83	72	1.50	1.94	77	0.014	98	100	64.8	0.01	0.58		110.1	171.7	169.0	61.4	171.5	116	73	73	72		1.001	4.854	535
566	91.138	91.574		0.16	0.16	1.31	1.08	0.25	83	83	72	1.40	1.94	77	0.013	103	104	64.9	-0.01	0.52		109.9	171.5	168.8	61.4	171.3	114	73	73	72		1.001	4.369	481
567	91.299	91.736		0.16	0.16	1.31	1.07	0.25	83	83	72	1.50	1.93	77	0.013	103	103	64.9	-0.05	0.56		109.6	171.3	168.6	61.4	171.1	113	73	73	72		1.001	4.696	516
568	91.460	91.900		0.16	0.16	1.31	1.08	0.25	83	83	72	1.50	1.94	77	0.013	103	104	65.0	-0.04	0.52		109.3	171.0	168.3	61.5	170.8	112	73	73	72		1.001	4.372	479
569	91.621	92.063		0.16	0.16	1.31	1.08	0.25	83	83	72	1.50	1.93	77	0.012	107	108	64.8	0.12	0.54		109.2	170.8	168.1	61.5	170.6	112	73	73	72		1.001	4.533	495
570	91.782	92.226		0.16	0.16	1.31	1.08	0.25	83	83	72	1.40	1.95	77	0.015	96	96	64.8	0.00	0.56		108.9	170.6	168.0	61.5	170.4	111	73	73	72		1.001	4.688	511
571	91.943	92.390		0.16	0.16	1.31	1.05	0.25	83	83	72	1.50	1.94	77	0.014	99	100	65.0	-0.17	0.58		108.8	170.4	167.8	61.4	170.2	110	73	73	72		1.001	4.859	529
572	92.104	92.553		0.16	0.16	1.31	1.07	0.25	83	83	72	1.50	1.93	77	0.012	107	108	64.8	0.25	0.52		108.5	170.1	167.4	61.4	169.9	109	73	73	72		1.001	4.371	475
573	92.264	92.716		0.16	0.16	1.31	1.08	0.25	83	83	72	1.40	1.93	77	0.015	95	96	64.9	-0.10	0.55		108.3	169.9	167.2	61.4	169.7	108	73	73	72		1.001	4.595	498
574	92.425	92.879		0.16	0.16	1.32	1.08	0.25	83	83	72	1.50	1.93	77	0.013	103	103	64.8	0.01	0.56		108.2	169.7	167.1	61.4	169.5	108	73	73	72		1.001	4.670	506
575	92.586	93.043		0.16	0.16	1.32	1.08	0.25	83	83	72	1.50	1.93	77	0.013	103	104	64.9	-0.04	0.56		107.9	169.3	166.7	61.3	169.2	107	73	73	72		1.001	4.695	507
576	92.747	93.207		0.16	0.16	1.32	1.08	0.25	83	83	72	1.50	1.95	77	0.014	99	100	64.8	0.12	0.54		107.8	169.2	166.6	61.2	169.0	106	73	73	72		1.001	4.537	489
577	92.908	93.370		0.16	0.16	1.32	1.08	0.25	83	83	72	1.50	1.93	77	0.015	96	96	65.1	-0.35	0.54		107.5	168.9	166.3	61.2	168.7	106	73	73	72		1.001	4.533	488
578	93.069	93.533		0.16	0.16	1.32	1.07	0.25	83	83	71	1.50	1.94	77	0.015	96	96	65.0	0.12	0.56		107.3	168.7	166.1	61.2	168.5	105	73	73	71		1.001	4.693	504
579	93.230	93.696		0.16	0.16	1.32	1.07	0.25	83	83	72	1.50	1.95	77	0.015	96	96	64.9	0.11	0.56		107.3	168.5	165.9	61.1	168.3	104	73	73	72		1.001	4.697	504
580	93.391	93.860		0.16	0.16	1.32	1.08	0.25	83	83	72	1.50	1.93	77	0.014	99	100	65.1	-0.17	0.58		107.0	168.2	165.6	61.0	168.1	104	73	73	72		1.001	4.856	520
581	93.551	94.024		0.16	0.16	1.32	1.08	0.25	83	83	72	1.50	1.94	77	0.014	98	100	65.0	0.02	0.60		106.8	168.0	165.3	61.0	167.8	104	73	73	72		1.001	5.019	537
582	93.712	94.187		0.16	0.16	1.32	1.08	0.25	83	83	72	1.40	1.94	77	0.014	99	100	65.1	-0.02	0.58		106.5	167.6	165.0	61.0	167.5	103	73	73	72		1.001	4.856	518
583	93.874	94.350		0.16	0.16	1.32	1.07	0.25	83	83	72	1.50	1.94	77	0.013	103	103	65.0	0.07	0.52		106.3	167.4	164.8	61.0	167.3	102	73	73	72		1.001	4.371	465
584	94.035	94.513		0.16	0.16	1.32	1.08	0.25	83	83	72	1.50	1.93	77	0.015	96	96	64.8	0.17	0.60		106.1	167.2	164.7	61.0	167.1	102	73	73	72		1.001	5.015	533
585	94.196	94.677		0.16	0.16	1.32	1.08	0.25	83	83	72	1.50	1.95	77	0.015	96	97	64.9	-0.06	0.54		105.8	166.9	164.3	61.0	166.8	101	73	73	72		1.001	4.534	480
586	94.357	94.840		0.16	0.16	1.31	1.07	0.25	83	83	72	1.50	1.94	77	0.014	99	100	64.9	-0.03	0.56		105.5	166.7	164.1	61.0	166.5	136	73	73	72		1.001	4.696	496
587	94.518	95.004		0.16	0.16	1.31	1.07	0.25	83	83	72	1.50	1.94	79	0.013	103	104	64.8	0.07	0.57		105.3	166.5	163.9	61.1	166.3	142	73	73	72		1.001	4.712	497
588	94.679	95.167		0.16	0.16	1.31	1.07	0.25	83	83	72	1.50	1.94	82	0.015	96	97	64.7	0.10	0.53		104.9	166.2	163.7	61.1	166.0	134	73	73	72		1.001	4.431	465
589	94.840	95.330		0.16	0.16	1.32	1.07	0.25	83	83	72	1.50	1.93	78	0.013	103	103	64.8	-0.09	0.54		104.6	166.0	163.4	61.1	165.8	125	73	73	72		1.001	4.535	475
590	95.000	95.493		0.16	0.16	1.32	1.08	0.25	83	83	72	1.50	1.93	77	0.012	106	108	64.7	0.08	0.55		104.3	165.7	163.1	61.2	165.5	119	73	73	72		1.001	4.552	475
591	95.161	95.656		0.16	0.16	1.31	1.08	0.25	83	83	72	1.50	1.94	77	0.012	107	108	64.7	0.01	0.52		104.1	165.5	163.0	61.2	165.3	115	73	73	72		1.001	4.372	456
592	95.322	95.821		0.16	0.16	1.31	1.07	0.25	83	83	72	1.50	1.93	77	0.014	99	101	64.7	0.00	0.54		103.8	165.3	162.7	61.3	165.1	112	73	73	72		1.001	4.529	471
593	95.483	95.984		0.16	0.16	1.31	1.08	0.25	83	83	72	1.50	1.95	77	0.013	103	103	64.7	0.06	0.52		103.6	165.1	162.5	61.3	164.9	110	73	73	72		1.001	4.373	453
594	95.644	96.146		0.16	0.16	1.31	1.08	0.25	83	83	72	1.50	1.93	77	0.014	99	99	64.7	-0.04	0.58		103.4	164.8	162.3	61.3	164.7	108	73	73	72		1.001	4.856	503
595	95.805	96.310		0.16	0.16	1.30	1.08	0.25	83	83	72	1.50	1.93	77	0.014	99	100	64.7	0.02	0.52		103.1	164.5	162.0	61.3	164.4	107	73	73	72		1.001	4.373	451
596	95.965	96.473		0.16	0.16	1.31	1.08	0.25	83	83	72	1.50	1.93	77	0.015	95	96	64.8	-0.16	0.54		102.8	164.3	161.8	61.3	164.2	105	73	73	72		1.001	4.531	466
597	96.126	96.637		0.16	0.16	1.31	1.08	0.25	83	83	72	1.50	1.95	77	0.014	99	100	64.7	0.16	0.56		102.5	164.1	161.5	61.3	163.9	105	73	73	72		1.001	4.696	482
598	96.287	96.801		0.16	0.16	1.31	1.08	0.25	83	83	72	1.40	1.93	77	0.014	99	100	64.8	-0.12	0.56		102.3	163.8	161.3	61.3	163.7	104	73	73	72		1.001	4.689	480
599	96.448	96.964		0.16	0.16	1.31	1.08	0.25	83	83	72	1.50	1.95	77	0.014	99	100	64.8	0.00	0.52		102.1	163.7	161.1	61.4	163.5	103	73	73	72		1.001	4.367	447
600	96.609	97.127		0.16	0.16	1.31	1.08	0.25	83	83	72	1.50	1.93	77	0.012	107	108	64.7	0.13	0.56		101.9	163.4	160.9	61.4	163.3	103	73	73	72		1.001	4.690	478
601	96.770	97.290		0.16	0.16	1.31	1.08	0.25	83	83	72	1.40	1.94	77	0.014	99	100	64.8	-0.08	0.56		101.6	163.1	160.6	61.4	163.0	102	73	73	72		1.001	4.693	477
602	96.930	97.454		0.16	0.16	1.31	1.08	0.25	83	83	72	1.50	1.94	77	0.013	102	104	64.7	0.06	0.54		101.3	162.9	160.4	61.4	162.7	101	73	73	72		1.001	4.531	460
603	97.091	97.618		0.16	0.16	1.32	1.08	0.25	83	83	72	1.50	1.94	77	0.013	103	104	64.6	0.06	0.58		101.0	162.6	160.2	61.4	162.4	100	73	73	72		1.001	4.850	490
604	97.252	97.781		0.16	0.16	1.31	1.08	0.25	83	83	72	1.50	1.93	77	0.011	112	112	64.6	0.00	0.54		100.8	162.4	160.0	61.4	162.3	100	73	73	72		1.001	4.517	456
605	97.413	97.944		0.16	0.16	1.31	1.08	0.25	83	83	72	1.50	1.94	77	0.013	103	103	64.8	-0.18	0.55		100.7	162.3	159.8	61.4	162.1	100	73	73	72		1.001	4.573	461
606	97.574	98.107		0.16	0.16	1.32	1.08	0.25	83	83	72	1.50	1.95	77	0.012	107	108	64.8	0.04	0.59		100.4	161.9	159.5	61.4	161.8	99	73	73	72		1.001	4.947	497
607	97.735	98.271		0.16	0.16	1.32	1.08	0.25	83	83	72	1.50	1.93	77	0.014	99	100	64.7	0.03	0.54		100.2	161.8	159.4	61.5	161.6	128	73	73	72		1.001	4.533	455
608	97.896	98.435		0.16	0.16	1.31	1.07	0.25	83	83	72	1.50	1.95	81	0.015	96	97	64.7	0.06	0.51		99.9	161.5	159.0	61.5	161.3	146	73	73	72		1.001	4.208	421
609	98.056	98.598		0.16	0.16	1.32	1.08	0.25	83	83	72	1.50	1.94	83	0.015	95	97	64.4	0.29	0.58		99.6	161.3	158.8	61.5	161.1	157	73	73	72		1.001	4.857	484
610	98.217	98.761		0.16	0.16	1.32	1.08	0.25	83	83	72	1.50	1.95	83	0.015	96	97	64.4	0.00	0.58		99.4	161.0	158.6	61.5	160.9	167	73	73	72		1.001	4.860	484

Elapsed Time	Particulate Sampling Data																	Fuel Weight, lb		Flow, gpm		Temperature Data, oF									Stack			
	Gas Meter Cubic Feet (1)	Gas Meter Cubic Feet (2)	Gas Meter Cubic Feet (amb)	Sample Rate, cfm (1)	Sample Rate, cfm (2)	Orifice dH (1)	Orifice dH (2)	Orifice dH (amb)	Meter oF (1)	Meter oF (2)	Meter oF (amb)	Meter Vac. in. Hg. (1)	Meter Vac. in. Hg. (2)	Dilution Tunnel Temp.	Dilution Tunnel dP	Pro. Rate (%) (1)	Pro. Rate (%) (2)	Scale Reading	Weight Change	Load Side Liquid Flow Rate	Boiler Side Liquid Flow Rate (optional)	Thermopile ΔT	Boiler to Heat Exch. Temp.	Heat Exch to Boiler Temp.	Inlet Load Temp.	Outlet Load Temp.	Stack	Filter (1)	Filter (2)	Ambient		Specific Heat of Inlet Water (BTU/lb-°F)	Mass Flow Rate of Inlet Water (lb/min)	Heat Output, Btu
611	98.378	98.924		0.16	0.16	1.32	1.07	0.25	83	83	72	1.50	1.93	84	0.017	90	91	64.1	0.30	0.56		99.3	160.9	158.5	61.5	160.7	183	73	73	72		1.001	4.694	467
612	98.539	99.087		0.16	0.16	1.32	1.08	0.25	83	83	72	1.50	1.95	86	0.013	103	104	63.9	0.24	0.54		99.3	160.8	158.4	61.4	160.7	202	73	73	72		1.001	4.534	451
613	98.699	99.251		0.16	0.16	1.32	1.08	0.25	83	83	72	1.50	1.94	89	0.014	99	101	63.6	0.22	0.56		99.3	160.9	158.4	61.3	160.7	217	73	73	72		1.001	4.669	466
614	98.860	99.414		0.16	0.16	1.32	1.08	0.25	83	83	72	1.50	1.94	91	0.013	104	105	63.4	0.24	0.58		99.5	161.1	158.6	61.3	160.8	229	73	74	72		1.001	4.855	484
615	99.021	99.577		0.16	0.16	1.32	1.07	0.25	83	83	72	1.50	1.95	92	0.014	100	101	62.9	0.48	0.54		99.8	161.4	158.9	61.2	161.1	240	74	74	72		1.001	4.531	453
616	99.182	99.739		0.16	0.16	1.32	1.07	0.25	83	83	72	1.50	1.96	94	0.014	100	101	62.7	0.25	0.54		100.1	161.6	159.1	61.2	161.3	249	74	74	72		1.001	4.533	454
617	99.343	99.902		0.16	0.16	1.32	1.08	0.25	83	83	72	1.50	1.94	95	0.012	109	109	62.2	0.49	0.54		100.7	162.3	159.8	61.1	161.9	259	74	74	72		1.001	4.531	457
618	99.503	100.066		0.16	0.16	1.32	1.08	0.25	83	83	72	1.50	1.96	96	0.015	97	99	61.9	0.30	0.51		101.4	162.8	160.2	61.1	162.4	269	74	74	72		1.001	4.215	428
619	99.664	100.229		0.16	0.16	1.31	1.07	0.25	83	83	72	1.50	1.97	98	0.016	94	95	61.4	0.49	0.58		102.0	163.6	161.0	61.0	163.1	281	74	75	72		1.001	4.839	494
620	99.825	100.391		0.16	0.16	1.31	1.07	0.25	83	83	72	1.50	1.97	100	0.014	101	101	60.9	0.49	0.56		102.9	164.5	161.9	61.0	163.9	292	75	75	72		1.001	4.662	481
621	99.985	100.553		0.16	0.16	1.32	1.07	0.25	83	83	72	1.50	1.97	102	0.015	97	98	60.5	0.43	0.56		103.9	165.3	162.7	61.0	164.9	303	75	75	72		1.001	4.695	488
622	100.145	100.715		0.16	0.16	1.31	1.07	0.25	83	83	72	1.50	1.98	103	0.014	101	101	59.8	0.62	0.54		104.5	165.9	163.4	61.0	165.5	314	75	75	72		1.001	4.528	474
623	100.305	100.878		0.16	0.16	1.31	1.06	0.25	83	83	72	1.50	1.98	104	0.015	97	99	59.4	0.46	0.56		105.3	166.9	164.2	61.1	166.4	321	76	76	72		1.001	4.694	495
624	100.465	101.039		0.16	0.16	1.31	1.07	0.25	83	83	72	1.50	1.98	105	0.014	101	101	58.8	0.56	0.56		106.5	168.2	165.5	61.1	167.6	328	76	76	72		1.001	4.691	500
625	100.625	101.201		0.16	0.16	1.31	1.06	0.25	83	83	72	1.50	1.98	107	0.013	105	106	58.3	0.50	0.58		107.5	169.3	166.5	61.1	168.7	334	76	76	72		1.001	4.853	522
626	100.784	101.363		0.16	0.16	1.31	1.06	0.25	83	83	72	1.50	1.98	108	0.014	100	102	57.9	0.45	0.60		108.6	170.3	167.5	61.2	169.8	338	76	76	72		1.001	5.011	545
627	100.944	101.525		0.16	0.16	1.30	1.06	0.25	83	83	72	1.50	1.98	109	0.015	98	98	57.1	0.79	0.54		109.5	171.3	168.5	61.2	170.7	342	77	77	72		1.001	4.529	496
628	101.104	101.686		0.16	0.16	1.31	1.06	0.25	83	83	72	1.50	1.98	109	0.014	101	101	56.8	0.30	0.56		110.7	172.6	169.8	61.3	172.0	344	77	77	72		1.001	4.694	520
629	101.264	101.847		0.16	0.16	1.31	1.06	0.25	83	83	72	1.50	1.99	110	0.014	101	101	56.2	0.59	0.56		112.0	173.9	171.1	61.3	173.3	347	77	77	72		1.001	4.691	526
630	101.424	102.009		0.16	0.16	1.31	1.06	0.25	83	83	72	1.50	1.99	111	0.015	98	99	55.6	0.38	0.52		113.0	175.0	172.1	61.4	174.4	350	77	77	72		1.001	4.366	494
631	101.583	102.170		0.16	0.16	1.31	1.05	0.25	83	83	72	1.50	1.99	111	0.013	105	105	55.2	0.63	0.54		114.3	176.3	173.4	61.4	175.7	353	77	77	72		1.001	4.530	518
632	101.743	102.331		0.16	0.16	1.31	1.05	0.25	83	83	72	1.50	1.99	112	0.013	105	105	54.6	0.58	0.52		115.3	177.4	174.5	61.4	176.7	354	78	78	72		1.001	4.372	505
633	101.904	102.492		0.16	0.16	1.30	1.05	0.25	83	83	72	1.50	2.00	112	0.015	99	98	54.1	0.52	0.56		116.5	178.6	175.6	61.4	177.9	355	78	78	72		1.001	4.669	547
634	102.063	102.654		0.16	0.16	1.30	1.06	0.25	83	83	72	1.50	1.99	112	0.013	105	106	53.9	0.22	0.54		117.6	179.6	176.6	61.4	179.0	354	78	78	72		1.001	4.523	533
635	102.223	102.813		0.16	0.16	1.31	1.05	0.25	83	83	72	1.50	2.00	112	0.013	105	104	52.9	0.97	0.55		118.9	181.0	178.0	61.4	180.3	354	78	78	72		1.001	4.541	541
636	102.382	102.974		0.16	0.16	1.30	1.05	0.25	83	83	72	1.50	1.98	112	0.014	101	102	52.7	0.20	0.55		120.0	182.1	179.0	61.4	181.4	355	78	78	72		1.001	4.549	546
637	102.541	103.135		0.16	0.16	1.30	1.05	0.25	83	83	72	1.50	1.99	112	0.014	101	102	52.0	0.68	0.57		121.3	183.3	180.2	61.5	182.7	343	78	78	72		1.001	4.771	579
638	102.701	103.296		0.16	0.16	1.31	1.05	0.25	83	83	72	1.50	1.97	103	0.014	101	101	51.9	0.14	0.57		122.2	184.3	181.2	61.5	183.7	313	78	78	72		1.001	4.783	585
639	102.861	103.457		0.16	0.16	1.30	1.05	0.25	83	83	72	1.50	1.97	93	0.013	103	104	51.5	0.35	0.54		123.0	184.9	181.9	61.5	184.5	294	78	78	72		1.001	4.529	558
640	103.021	103.618		0.16	0.16	1.30	1.06	0.25	83	83	72	1.50	1.98	89	0.014	99	100	51.4	0.18	0.52		123.3	185.3	182.2	61.5	184.9	281	78	77	72		1.001	4.368	539
641	103.180	103.780		0.16	0.16	1.31	1.05	0.25	83	83	72	1.50	1.98	86	0.014	98	100	51.4	-0.03	0.54		123.8	185.7	182.7	61.5	185.4	269	77	77	72		1.001	4.529	561
642	103.340	103.941		0.16	0.16	1.30	1.06	0.25	83	83	72	1.50	1.96	85	0.014	99	99	51.2	0.17	0.56		124.1	186.1	183.0	61.5	185.6	259	77	77	72		1.001	4.669	583
643	103.501	104.102		0.16	0.16	1.30	1.05	0.25	83	83	72	1.50	1.97	84	0.014	100	99	51.0	0.23	0.56		124.5	186.4	183.3	61.5	186.0	251	77	77	72		1.001	4.693	585
644	103.660	104.264		0.16	0.16	1.30	1.06	0.25	83	83	72	1.50	1.96	83	0.013	102	103	51.1	-0.13	0.56		124.7	186.6	183.5	61.6	186.3	244	77	77	72		1.001	4.688	585
645	103.821	104.426		0.16	0.16	1.30	1.05	0.25	83	83	72	1.50	1.97	82	0.014	99	99	51.0	0.07	0.56		124.8	186.7	183.6	61.6	186.3	237	77	77	72		1.001	4.692	586
646	103.981	104.587		0.16	0.16	1.30	1.05	0.25	83	83	72	1.50	1.97	82	0.014	99	99	51.0	0.03	0.54		124.8	186.6	183.6	61.6	186.4	231	77	76	72		1.001	4.527	565
647	104.142	104.749		0.16	0.16	1.30	1.05	0.25	83	83	72	1.50	1.97	81	0.014	99	99	50.9	0.12	0.54		124.7	186.6	183.6	61.6	186.3	226	76	76	72		1.001	4.532	566
648	104.302	104.911		0.16	0.16	1.30	1.06	0.25	83	83	72	1.50	1.97	81	0.016	92	93	50.9	-0.01	0.56		124.7	186.5	183.5	61.6	186.3	221	76	76	72		1.001	4.691	585
649	104.462	105.073		0.16	0.16	1.30	1.06	0.25	83	83	72	1.50	1.97	81	0.014	99	99	50.8	0.12	0.56		124.6	186.4	183.4	61.6	186.2	218	76	76	72		1.001	4.691	585
650	104.622	105.234		0.16	0.16	1.30	1.05	0.25	83	83	72	1.50	1.97	80	0.014	99	99	50.9	-0.17	0.56		124.5	186.3	183.2	61.5	186.0	215	76	76	72		1.001	4.688	584
651	104.782	105.396		0.16	0.16	1.29	1.05	0.25	83	83	72	1.50	1.97	79	0.015	95	96	50.9	0.00	0.52		124.6	186.3	183.3	61.5	186.1	212	76	76	72		1.001	4.366	544
652	104.942	105.558		0.16	0.16	1.30	1.05	0.25	83	83	72	1.50	1.96	79	0.014	98	99	51.0	-0.04	0.55		124.6	186.2	183.2	61.4	186.0	208	76	75	72		1.001	4.590	572
653	105.102	105.720		0.16	0.16	1.30	1.05	0.25	83	83	72	1.50	1.96	79	0.014	98	99	50.9	0.12	0.54		124.4	186.0	183.0	61.3	185.7	204	75	75	72		1.001	4.533	565
654	105.262	105.881		0.16	0.16	1.30	1.06	0.25	83	83	72	1.50	1.98	79	0.012	106	106	51.0	-0.15	0.53		124.3	185.9	182.9	61.3	185.6	200	75	75	72		1.001	4.376	545
655	105.422	106.043		0.16	0.16	1.30	1.06	0.25	83	83	72	1.50	1.97	78	0.014	98	99	51.0	0.06	0.58		124.2	185.7	182.7	61.3	185.5	197	75	75	72		1.001	4.854	603
656	105.582	106.205		0.16	0.16	1.30	1.05	0.25	83	83	72	1.50	1.96	78	0.013	102	103	50.9	0.02	0.54		124.0	185.6	182.5	61.3	185.3	193	75	75	72		1.001	4.530	562
657	105.742	106.366		0.16	0.16	1.31	1.05	0.25	83	83	72	1.50	1.97	78	0.012	106	106	50.9	0.03	0.52		124.0	185.4	182.4	61.2	185.2	189	75	75	72		1.001	4.372	543
658	105.902	106.528		0.16	0.16	1.31	1.05	0.25	83	83	72	1.50	1.98	78	0.015	95	96	51.0	-0.12	0.52		123.9	185.4	182.4	61.2	185.1	186	75	75	72		1.001	4.371	542
659	106.063	106.690		0.16	0.16	1.30	1.06	0.25	83	83	72	1.50	1.96	78	0.012	107	107	50.9	0.12	0.56		123.8	185.2	182.2	61.2	185.0	183	75	75	72		1.001	4.689	581
660	106.222	106.852		0.16	0.16	1.30	1.06	0.25	83	83	72	1.50	1.98	78	0.015	94	96	51.1	-0.13	0.56		123.6	184.9	182.0	61.2	184.7	180	75	74	72		1.001	4.693	581
661	106.383	107.013		0.16	0.16	1.30	1.05	0.25	83	83	72	1.50	1.97	78	0.013	103	102	51.0	0.09	0.54		123.3	184.8	181.8	61.2	184.5	177	74	74	72		1.001	4.527	559
662	106.543	107.175		0.16	0.16	1.30	1.05	0.25	83	83	72	1.50	1.96	78	0.012	106	107	51.0	-0.06	0.54		123.1	184.7	181.7	61.2	184.4	174	74	74	72		1.001	4.532	559
663	106.704	107.337		0.16	0.16	1.30	1.06	0.25	83	83	72	1.50	1.97	78	0.014	99	99	50.9	0.09	0.54		122.9	184.6	181.5	61.3	184.2	171	74	74	72		1.001	4.529	557
664	106.864	107.499		0.16	0.16	1.30	1.06	0.25	83	83	72	1.50	1.97	78	0.015	95	96	51.0	-0.02	0.58		122.8	184.4	181.5	61.3	184.1	168	74	74	72		1.001	4.852	597
665	107.024	107.661		0.16	0.16	1.31	1.05	0.25	83	83	72	1.50	1.96	78	0.014	98	99	51.0	-0.04	0.51		122.6	184.3	181.3	61.4	184.0	166	74	74	72		1.001	4.209	517
666	107.184	107.822		0.16	0.16	1.31	1.06	0.25	83	83	72	1.50	1.97	78	0.013	102	102	51.0	0.01	0.58		122.5	184.2	181.2	61.4	183.9	163	74	74	72		1.001	4.852	595
667	107.345	107.984		0.16	0.16	1.30	1.06	0.25	83	83	72	1.50	1.97	78	0.015	96	96	51.0	-0.02	0.54		122.3	183.9	180.9	61.4	183.6	161	74	74	72		1.001	4.530	554
668	107.505	108.146		0.16	0.16	1.30	1.06	0.25	83	83	72	1.50	1.96	78	0.014	98	99	51.0	0.00	0.55		122.0	183.7	180.7	61.4	183.4	158	74	74	72		1.001	4.551	556
669	107.665	108.307		0.16	0.16	1.30	1.05	0.25	83	83	72	1.50	1.97	78	0.014	98	99	51.0	0.04	0.58		121.8	183.4	180.5	61.4	183.2	156	74	74	72		1.001	4.813	587
670	107.825	108.469		0.16	0.16	1.30	1.05	0.25	83	83	72	1.50	1.95	78	0.013	102	103	50.9	0.08	0.57		121.7	183.4	180.4	61.4	183.1	154	74	74	72		1.001	4.759	580
671	107.985	108.631		0.16	0.16	1.30	1.06	0.25	83	83	72	1.50	1.97	78	0.014	98	99	51.0	-0.09	0.56		121.5	183.1	180.2	61.5	182.9	152	74	74	72		1.001	4.669	570
672	108.145	108.793		0.16	0.16	1.30	1.06	0.25	83	83	72	1.50	1.96	77	0.014	98	99	51.1	-0.12	0.54		121.2	182.9	179.9	61.5	182.6	150	74	74	72		1.001	4.533	550

Elapsed Time	Particulate Sampling Data																	Fuel Weight, lb		Flow, gpm		Temperature Data, oF									Stack			
	Gas Meter Cubic Feet (1)	Gas Meter Cubic Feet (2)	Gas Meter Cubic Feet (amb)	Sample Rate, cfm (1)	Sample Rate, cfm (2)	Orifice dH (1)	Orifice dH (2)	Orifice dH (amb)	Meter oF (1)	Meter oF (2)	Meter oF (amb)	Meter Vac. in. Hg. (1)	Meter Vac. in. Hg. (2)	Dilution Tunnel Temp.	Dilution Tunnel dP	Pro. Rate (%) (1)	Pro. Rate (%) (2)	Scale Reading	Weight Change	Load Side Liquid Flow Rate	Boiler Side Liquid Flow Rate (optional)	Thermopile ΔT	Boiler to Heat Exch. Temp.	Heat Exch to Boiler Temp.	Inlet Load Temp.	Outlet Load Temp.	Stack	Filter (1)	Filter (2)	Ambient		Specific Heat of Inlet Water (BTU/lb-°F)	Mass Flow Rate of Inlet Water (lb/min)	Heat Output, Btu
673	108.305	108.955		0.16	0.16	1.30	1.05	0.25	83	83	72	1.50	1.97	77	0.014	98	99	50.9	0.23	0.58		121.0	182.7	179.8	61.5	182.5	148	74	74	72		1.001	4.852	588
674	108.465	109.116		0.16	0.16	1.30	1.05	0.25	83	83	72	1.50	1.96	77	0.013	102	102	50.9	0.00	0.52		120.9	182.6	179.7	61.5	182.4	146	74	73	72		1.001	4.366	529
675	108.625	109.278		0.16	0.16	1.31	1.06	0.25	83	83	72	1.50	1.98	77	0.014	98	99	51.1	-0.21	0.54		120.8	182.5	179.6	61.5	182.3	144	73	73	72		1.001	4.531	548
676	108.785	109.440		0.16	0.16	1.31	1.06	0.25	83	83	72	1.50	1.96	77	0.014	98	99	51.0	0.11	0.58		120.5	182.2	179.3	61.5	182.0	143	73	73	72		1.001	4.853	586
677	108.946	109.602		0.16	0.16	1.31	1.05	0.25	83	83	72	1.50	1.97	77	0.013	103	103	50.9	0.05	0.56		120.2	181.9	179.0	61.5	181.7	141	73	73	72		1.001	4.693	565
678	109.106	109.763		0.16	0.16	1.31	1.06	0.25	83	83	72	1.50	1.96	78	0.013	102	102	50.9	0.03	0.54		120.1	181.9	178.9	61.5	181.6	139	73	73	72		1.001	4.530	545
679	109.267	109.925		0.16	0.16	1.30	1.06	0.25	83	83	72	1.50	1.96	77	0.015	96	96	50.9	-0.04	0.56		119.9	181.7	178.7	61.5	181.4	145	73	73	72		1.001	4.691	563
680	109.427	110.087		0.16	0.16	1.30	1.05	0.25	83	83	72	1.50	1.98	79	0.015	95	96	50.6	0.13	0.56		119.7	181.3	178.4	61.5	181.2	180	73	73	72		1.001	4.690	562
681	109.587	110.248		0.16	0.16	1.30	1.05	0.25	83	83	72	1.50	1.98	87	0.015	96	96	50.6	0.17	0.54		119.3	181.0	178.1	61.5	180.8	177	74	74	72		1.001	4.529	541
682	109.747	110.410		0.16	0.16	1.31	1.07	0.25	83	83	72	1.50	1.94	81	0.012	107	107	50.6	0.01	0.52		119.3	181.0	178.1	61.4	180.7	164	73	73	72		1.001	4.367	522
683	109.907	110.572		0.16	0.16	1.30	1.07	0.25	83	83	72	1.50	1.94	79	0.013	102	103	50.4	0.18	0.57		119.2	180.8	177.9	61.4	180.6	156	73	73	72		1.001	4.714	562
684	110.068	110.736		0.16	0.16	1.30	1.07	0.25	83	83	72	1.50	1.96	78	0.014	99	100	50.6	-0.13	0.52		119.1	180.7	177.8	61.3	180.5	150	73	73	72		1.001	4.366	521
685	110.229	110.898		0.16	0.16	1.30	1.07	0.25	83	83	72	1.50	1.94	78	0.015	96	96	50.7	-0.09	0.56		118.9	180.4	177.5	61.3	180.2	146	73	73	72		1.001	4.626	551
686	110.389	111.060		0.16	0.16	1.30	1.07	0.25	83	83	72	1.50	1.95	77	0.012	106	107	50.6	0.04	0.56		118.7	180.2	177.3	61.2	179.9	143	73	73	72		1.001	4.691	558
687	110.549	111.223		0.16	0.16	1.31	1.07	0.25	83	83	72	1.50	1.96	78	0.014	98	100	50.6	0.07	0.58		118.6	179.9	177.1	61.2	179.8	140	73	73	72		1.001	4.855	576
688	110.710	111.386		0.16	0.16	1.31	1.07	0.25	83	83	72	1.50	1.95	77	0.014	99	100	50.5	0.04	0.56		118.4	179.7	176.8	61.1	179.5	138	73	73	72		1.001	4.687	556
689	110.870	111.548		0.16	0.16	1.31	1.07	0.25	83	83	72	1.50	1.94	77	0.015	95	96	50.4	0.06	0.56		118.2	179.5	176.6	61.1	179.3	136	73	73	72		1.001	4.693	555
690	111.031	111.711		0.16	0.16	1.30	1.07	0.25	83	83	72	1.50	1.95	77	0.014	99	100	50.5	-0.09	0.54		118.1	179.3	176.5	61.0	179.1	134	73	73	72		1.001	4.531	536
691	111.192	111.873		0.16	0.16	1.31	1.07	0.25	84	83	72	1.50	1.95	77	0.013	102	103	50.6	-0.02	0.58		117.8	179.1	176.2	61.0	178.8	133	73	73	72		1.001	4.853	572
692	111.352	112.036		0.16	0.16	1.31	1.07	0.25	83	83	72	1.50	1.96	77	0.014	98	100	50.6	-0.08	0.52		117.6	178.8	175.9	61.0	178.6	131	73	73	72		1.001	4.372	515
693	111.512	112.199		0.16	0.16	1.31	1.07	0.25	83	83	72	1.50	1.95	77	0.015	95	96	50.5	0.13	0.52		117.4	178.8	175.9	61.0	178.5	130	73	73	72		1.001	4.370	514
694	111.673	112.362		0.16	0.16	1.31	1.06	0.25	83	83	72	1.50	1.94	77	0.014	99	100	50.7	-0.15	0.54		117.1	178.4	175.5	61.1	178.2	129	73	73	72		1.001	4.535	532
695	111.834	112.524		0.16	0.16	1.31	1.06	0.25	83	83	72	1.50	1.96	77	0.012	107	107	50.6	0.05	0.56		116.8	178.2	175.3	61.2	178.0	127	73	73	72		1.001	4.689	548
696	111.994	112.687		0.16	0.16	1.31	1.07	0.25	83	83	72	1.50	1.95	77	0.013	102	103	50.5	0.07	0.54		116.6	178.0	175.2	61.2	177.8	126	73	73	72		1.001	4.529	528
697	112.155	112.849		0.16	0.16	1.31	1.07	0.25	83	83	72	1.50	1.96	77	0.013	103	103	50.4	0.11	0.58		116.3	177.8	174.9	61.3	177.6	125	73	73	72		1.001	4.857	566
698	112.315	113.013		0.16	0.16	1.31	1.07	0.25	83	83	72	1.50	1.95	77	0.014	98	100	50.5	-0.11	0.54		116.1	177.6	174.7	61.3	177.4	123	73	73	72		1.001	4.531	527
699	112.476	113.175		0.16	0.16	1.31	1.06	0.25	83	83	72	1.50	1.95	77	0.013	103	103	50.7	-0.16	0.58		115.8	177.3	174.5	61.3	177.1	123	73	73	72		1.001	4.857	563
700	112.637	113.337		0.16	0.16	1.31	1.06	0.25	83	83	72	1.50	1.96	77	0.013	103	103	50.6	0.14	0.56		115.6	177.1	174.3	61.3	176.9	122	73	73	72		1.001	4.691	543
701	112.798	113.500		0.16	0.16	1.31	1.07	0.25	83	83	72	1.50	1.95	77	0.015	96	96	50.5	0.03	0.53		115.3	176.8	174.0	61.4	176.7	120	73	73	72		1.001	4.438	512
702	112.959	113.663		0.16	0.16	1.30	1.07	0.25	83	83	72	1.50	1.95	77	0.016	93	93	50.6	-0.06	0.56		115.0	176.6	173.8	61.4	176.4	119	73	73	72		1.001	4.664	537
703	113.119	113.826		0.16	0.16	1.30	1.07	0.25	83	83	72	1.50	1.96	77	0.015	95	96	50.6	-0.07	0.52		114.8	176.4	173.7	61.4	176.2	118	73	73	72		1.001	4.368	502
704	113.280	113.988		0.16	0.16	1.31	1.07	0.25	83	83	72	1.50	1.95	77	0.014	99	99	50.6	0.05	0.56		114.6	176.1	173.4	61.4	176.0	118	73	73	72		1.001	4.695	538
705	113.440	114.150		0.16	0.16	1.31	1.07	0.25	83	83	72	1.50	1.95	77	0.015	95	96	50.7	-0.12	0.56		114.3	175.9	173.1	61.4	175.7	117	73	73	72		1.001	4.693	537
706	113.601	114.313		0.16	0.16	1.31	1.07	0.25	83	83	72	1.50	1.95	77	0.014	99	100	50.6	0.13	0.51		114.1	175.7	173.0	61.4	175.5	116	73	73	72		1.001	4.208	481
707	113.762	114.477		0.16	0.16	1.30	1.07	0.25	83	83	72	1.50	1.96	77	0.014	99	100	50.6	-0.05	0.60		113.8	175.4	172.7	61.4	175.3	115	73	73	72		1.001	5.015	572
708	113.922	114.639		0.16	0.16	1.30	1.07	0.25	83	83	72	1.50	1.96	77	0.013	102	103	50.5	0.16	0.52		113.6	175.3	172.5	61.5	175.0	114	73	73	72		1.001	4.367	497
709	114.083	114.801		0.16	0.16	1.30	1.07	0.25	83	83	72	1.50	1.94	77	0.014	99	99	50.6	-0.14	0.56		113.3	175.0	172.2	61.5	174.8	113	73	73	72		1.001	4.689	532
710	114.243	114.964		0.16	0.16	1.30	1.07	0.25	83	83	72	1.50	1.95	77	0.014	98	100	50.6	0.00	0.56		113.0	174.7	172.0	61.5	174.5	113	73	73	72		1.001	4.694	531
711	114.404	115.127		0.16	0.16	1.30	1.07	0.25	83	83	72	1.50	1.96	77	0.013	103	103	50.6	0.01	0.56		112.8	174.5	171.7	61.5	174.2	140	73	73	72		1.001	4.693	530
712	114.564	115.289		0.16	0.16	1.30	1.06	0.25	83	83	72	1.50	1.97	83	0.014	99	100	50.5	0.15	0.50		112.5	174.2	171.4	61.5	174.0	161	73	73	72		1.001	4.204	473
713	114.724	115.451		0.16	0.16	1.31	1.07	0.25	83	83	72	1.50	1.96	84	0.014	99	100	50.4	0.04	0.56		112.2	173.9	171.2	61.5	173.7	145	73	73	72		1.001	4.693	527
714	114.885	115.613		0.16	0.16	1.31	1.07	0.25	83	83	72	1.50	1.96	78	0.015	96	96	50.4	0.04	0.58		112.1	173.7	171.0	61.5	173.6	135	73	73	72		1.001	4.823	541
715	115.045	115.776		0.16	0.16	1.31	1.07	0.25	84	83	72	1.50	1.96	77	0.014	98	100	50.3	0.06	0.54		111.8	173.6	170.8	61.5	173.4	128	73	73	72		1.001	4.499	504
716	115.206	115.940		0.16	0.16	1.31	1.07	0.25	83	83	72	1.50	1.95	77	0.014	99	100	50.4	-0.09	0.54		111.6	173.3	170.6	61.5	173.1	124	73	73	72		1.001	4.525	506
717	115.366	116.102		0.16	0.16	1.31	1.07	0.25	83	83	72	1.50	1.94	77	0.013	102	103	50.4	0.02	0.52		111.3	173.0	170.3	61.5	172.8	121	73	73	72		1.001	4.331	482
718	115.527	116.264		0.16	0.16	1.31	1.07	0.25	83	83	72	1.50	1.95	77	0.014	99	99	50.5	-0.08	0.56		111.1	172.8	170.1	61.5	172.6	119	73	73	72		1.001	4.692	522
719	115.688	116.427		0.16	0.16	1.31	1.07	0.25	84	83	72	1.50	1.94	77	0.014	99	100	50.5	0.01	0.56		110.9	172.6	169.9	61.5	172.4	117	73	73	72		1.001	4.690	521
720	115.848	116.590		0.16	0.16	1.31	1.07	0.25	83	83	72	1.50	1.95	77	0.013	102	103	50.3	0.14	0.58		110.7	172.3	169.6	61.4	172.1	116	73	73	72		1.001	4.858	538
721	116.009	116.753		0.16	0.16	1.31	1.07	0.25	83	83	72	1.50	1.94	77	0.013	103	103	50.4	-0.05	0.54		110.5	172.0	169.4	61.4	171.9	114	73	73	72		1.001	4.529	501
722	116.169	116.915		0.16	0.16	1.31	1.07	0.25	83	83	72	1.50	1.94	77	0.015	95	96	50.3	0.06	0.56		110.3	171.8	169.2	61.3	171.6	114	73	73	72		1.001	4.693	518
723	116.330	117.078		0.16	0.16	1.31	1.07	0.25	83	83	72	1.50	1.95	77	0.015	96	96	50.4	-0.05	0.54		110.2	171.6	168.9	61.2	171.4	112	73	73	72		1.001	4.533	500
724	116.491	117.241		0.16	0.16	1.31	1.07	0.25	84	83	72	1.50	1.96	77	0.014	99	100	50.3	0.03	0.56		110.0	171.5	168.7	61.2	171.2	112	73	73	72		1.001	4.694	517
725	116.652	117.404		0.16	0.16	1.31	1.07	0.25	83	83	72	1.50	1.94	77	0.013	103	103	50.4	-0.05	0.58		109.8	171.1	168.4	61.2	171.0	111	73	73	72		1.001	4.853	533
726	116.813	117.566		0.16	0.16	1.31	1.07	0.25	83	83	72	1.50	1.95	77	0.013	103	103	50.4	-0.04	0.56		109.5	170.8	168.2	61.1	170.6	110	73	73	72		1.001	4.691	514
727	116.974	117.729		0.16	0.16	1.31	1.06	0.25	84	83	72	1.50	1.96	77	0.013	102	103	50.4	0.06	0.52		109.4	170.6	168.0	61.1	170.5	110	73	73	72		1.001	4.367	478
728	117.134	117.891		0.16	0.16	1.31	1.07	0.25	84	83	72	1.50	1.96	77	0.013	102	103	50.3	0.05	0.54		109.1	170.4	167.8	61.1	170.2	109	73	73	72		1.001	4.528	495
729	117.295	118.054		0.16	0.16	1.31	1.07	0.25	83	83	72	1.50	1.95	77	0.012	107	108	50.3	-0.01	0.54		108.8	170.2	167.5	61.1	169.9	108	73	73	72		1.001	4.537	494
730	117.455	118.218		0.16	0.16	1.31	1.07	0.25	83	83	72	1.50	1.94	77	0.014	98	100	50.4	-0.11	0.53		108.7	170.0	167.3	61.1	169.8	107	73	73	72		1.001	4.375	476
731	117.616	118.380		0.16	0.16	1.31	1.06	0.25	84	83	72	1.50	1.95	77	0.013	102	103	50.4	0.08	0.56		108.4	169.6	167.0	61.1	169.5	107	73	73	72		1.001	4.691	509
732	117.777	118.542		0.16	0.16	1.30	1.07	0.25	83	83	72	1.50	1.96	77	0.012	107	107	50.4	-0.09	0.56		108.1	169.4	166.8	61.1	169.3	106	73	73	72		1.001	4.693	508
733	117.937	118.705		0.16	0.16	1.31	1.07	0.25	83	83	72	1.50	1.96	77	0.013	102	103	50.5	-0.01	0.55		107.8	169.1	166.5	61.2	168.9	105	73	73	72		1.001	4.595	486
734	118.098	118.868		0.16	0.16	1.30	1.07	0.25	83	83	72	1.50	1.96	77	0.014	99	100	50.4	0.09	0.56		107.5	169.0	166.3	61.2	168.8	104	73	73	72		1.001	4.692	505

Elapsed Time	Particulate Sampling Data																	Fuel Weight, lb		Flow, gpm		Temperature Data, oF									Stack			
	Gas Meter Cubic Feet (1)	Gas Meter Cubic Feet (2)	Gas Meter Cubic Feet (amb)	Sample Rate, cfm (1)	Sample Rate, cfm (2)	Orifice dH (1)	Orifice dH (2)	Orifice dH (amb)	Meter oF (1)	Meter oF (2)	Meter oF (amb)	Meter Vac. in. Hg. (1)	Meter Vac. in. Hg. (2)	Dilution Tunnel Temp.	Dilution Tunnel dP	Pro. Rate (%) (1)	Pro. Rate (%) (2)	Scale Reading	Weight Change	Load Side Liquid Flow Rate	Boiler Side Liquid Flow Rate (optional)	Thermopile ΔT	Boiler to Heat Exch. Temp.	Heat Exch to Boiler Temp.	Inlet Load Temp.	Outlet Load Temp.	Stack	Filter (1)	Filter (2)	Ambient		Specific Heat of Inlet Water (BTU/lb-°F)	Mass Flow Rate of Inlet Water (lb/min)	Heat Output, Btu
735	118.258	119.031		0.16	0.16	1.30	1.07	0.25	83	83	72	1.50	1.96	77	0.013	102	103	50.5	-0.09	0.52		107.3	168.7	166.1	61.3	168.5	104	73	73	72		1.001	4.372	470
736	118.419	119.193		0.16	0.16	1.30	1.06	0.25	83	83	72	1.50	1.96	77	0.014	99	99	50.4	0.02	0.54		107.1	168.5	165.9	61.3	168.4	104	73	73	72		1.001	4.530	486
737	118.580	119.356		0.16	0.16	1.31	1.07	0.25	83	83	72	1.50	1.94	77	0.014	99	100	50.4	0.03	0.54		106.8	168.2	165.7	61.3	168.1	103	73	73	72		1.001	4.533	484
738	118.740	119.519		0.16	0.16	1.30	1.07	0.25	83	83	72	1.50	1.95	77	0.013	102	103	50.4	-0.03	0.52		106.5	167.9	165.4	61.3	167.8	103	73	73	72		1.001	4.371	466
739	118.901	119.682		0.16	0.16	1.31	1.07	0.25	83	83	72	1.50	1.94	77	0.014	99	100	50.5	-0.02	0.60		106.2	167.8	165.2	61.3	167.5	102	73	73	72		1.001	5.015	533
740	119.061	119.844		0.16	0.16	1.31	1.06	0.25	83	83	72	1.50	1.95	77	0.014	98	99	50.4	0.04	0.54		105.9	167.5	164.9	61.4	167.3	101	73	73	72		1.001	4.530	481
741	119.222	120.006		0.16	0.16	1.31	1.07	0.25	83	83	72	1.50	1.96	77	0.014	99	99	50.4	0.06	0.54		105.7	167.2	164.7	61.4	167.1	101	73	73	72		1.001	4.530	479
742	119.382	120.169		0.16	0.16	1.31	1.07	0.25	83	83	72	1.50	1.94	77	0.015	95	96	50.4	-0.03	0.54		105.5	167.0	164.5	61.4	166.9	101	73	73	72		1.001	4.531	479
743	119.543	120.332		0.16	0.16	1.32	1.07	0.25	83	83	72	1.50	1.95	77	0.015	96	96	50.4	-0.05	0.54		105.2	166.8	164.2	61.4	166.6	134	73	73	72		1.001	4.531	477
744	119.704	120.495		0.16	0.16	1.31	1.06	0.25	83	83	72	1.50	1.97	81	0.014	99	100	50.3	0.10	0.54		104.9	166.4	164.0	61.4	166.3	136	73	73	72		1.001	4.533	476
745	119.864	120.657		0.16	0.16	1.31	1.07	0.25	83	83	72	1.50	1.96	79	0.012	106	107	50.3	0.00	0.52		104.7	166.3	163.7	61.4	166.1	125	73	73	72		1.001	4.370	458
746	120.025	120.820		0.16	0.16	1.31	1.07	0.25	84	83	72	1.50	1.96	77	0.014	99	100	50.3	0.01	0.66		104.4	166.0	162.9	61.4	165.8	119	73	73	72		1.001	5.470	572
747	120.185	120.982		0.16	0.16	1.31	1.07	0.25	83	83	72	1.50	1.96	77	0.013	102	103	50.5	-0.13	0.69		103.9	165.5	162.1	61.4	165.3	114	73	73	72		1.001	5.773	601
748	120.346	121.145		0.16	0.16	1.31	1.07	0.25	83	83	72	1.50	1.96	77	0.014	99	100	50.2	0.23	0.69		103.7	165.1	161.8	61.3	165.0	111	73	73	72		1.001	5.720	594
749	120.507	121.308		0.16	0.16	1.32	1.07	0.25	83	83	72	1.50	1.96	77	0.014	99	100	50.3	-0.03	0.72		103.4	164.7	161.4	61.2	164.5	109	73	73	72		1.001	5.964	617
750	120.668	121.471		0.16	0.16	1.31	1.07	0.25	83	83	72	1.50	1.94	77	0.013	103	103	50.2	0.03	0.64		103.2	164.4	161.1	61.1	164.3	107	73	73	72		1.001	5.340	552
751	120.829	121.633		0.16	0.16	1.31	1.07	0.25	83	83	72	1.50	1.95	77	0.013	103	103	50.4	-0.14	0.70		102.9	164.0	160.7	61.0	163.9	106	73	73	72		1.001	5.822	600
752	120.990	121.796		0.16	0.16	1.31	1.07	0.25	84	83	72	1.50	1.96	77	0.013	102	103	50.2	0.15	0.68		102.8	163.7	160.4	60.8	163.6	104	73	73	72		1.001	5.665	583
753	121.150	121.959		0.16	0.16	1.31	1.07	0.25	84	83	72	1.50	1.95	77	0.014	98	100	50.3	-0.07	0.68		102.6	163.4	160.1	60.7	163.3	104	73	73	72		1.001	5.666	582
754	121.311	122.122		0.16	0.16	1.31	1.07	0.25	83	83	72	1.50	1.95	77	0.013	103	103	50.1	0.15	0.72		102.4	163.1	159.7	60.6	162.9	103	73	73	72		1.001	5.990	614
755	121.471	122.284		0.16	0.16	1.31	1.07	0.25	83	83	72	1.50	1.94	77	0.013	102	103	50.3	-0.14	0.66		102.2	162.8	159.5	60.4	162.6	102	73	73	72		1.001	5.506	563
756	121.632	122.447		0.16	0.16	1.32	1.07	0.25	83	83	72	1.50	1.96	77	0.013	103	103	50.3	-0.03	0.70		102.0	162.5	159.2	60.3	162.4	101	73	73	72		1.001	5.826	595
757	121.793	122.610		0.16	0.16	1.30	1.07	0.25	83	83	72	1.50	1.95	77	0.012	107	108	50.3	-0.02	0.70		101.9	162.2	158.9	60.2	162.1	101	73	73	72		1.001	5.826	595
758	121.953	122.774		0.16	0.16	1.31	1.07	0.25	83	83	72	1.50	1.96	77	0.015	95	97	50.2	0.09	0.74		101.6	161.8	158.5	60.0	161.7	100	73	73	72		1.001	6.149	626
759	122.114	122.936		0.16	0.16	1.30	1.06	0.25	83	83	72	1.50	1.96	77	0.014	99	99	50.2	-0.01	0.68		101.4	161.5	158.2	60.0	161.4	134	73	73	72		1.001	5.664	575
760	122.274	123.098		0.16	0.16	1.30	1.07	0.25	83	83	72	1.50	1.95	81	0.014	99	99	50.1	0.16	0.66		101.1	161.1	157.9	59.9	161.0	149	73	73	72		1.001	5.504	557
761	122.435	123.261		0.16	0.16	1.31	1.07	0.25	83	83	72	1.50	1.95	83	0.013	103	104	50.1	-0.06	0.70		100.8	160.8	157.6	59.9	160.7	160	73	73	72		1.001	5.827	588
762	122.596	123.423		0.16	0.16	1.31	1.07	0.25	83	83	72	1.50	1.96	83	0.012	107	108	49.8	0.30	0.73		100.5	160.5	157.2	59.8	160.4	170	73	73	72		1.001	6.110	615
763	122.756	123.586		0.16	0.16	1.31	1.06	0.25	83	83	72	1.50	1.96	84	0.015	96	97	49.7	0.09	0.67		100.3	160.3	157.1	59.8	160.2	184	73	73	72		1.001	5.607	563
764	122.916	123.749		0.16	0.16	1.31	1.07	0.25	83	83	72	1.50	1.95	87	0.016	93	94	49.5	0.24	0.72		100.2	160.2	157.0	59.8	160.0	197	73	74	72		1.001	5.989	601
765	123.077	123.911		0.16	0.16	1.31	1.07	0.25	83	83	72	1.50	1.96	89	0.015	97	97	49.3	0.20	0.68		100.0	160.1	156.8	59.9	159.9	208	74	74	72		1.001	5.662	567
766	123.237	124.074		0.16	0.16	1.31	1.07	0.25	83	83	72	1.50	1.95	91	0.013	103	105	49.2	0.14	0.70		100.1	160.2	156.9	59.9	160.0	218	74	74	72		1.001	5.829	584
767	123.398	124.237		0.16	0.16	1.31	1.07	0.25	83	83	72	1.50	1.96	91	0.014	100	101	48.9	0.25	0.68		100.1	160.2	156.9	59.9	160.0	226	74	74	72		1.001	5.665	568
768	123.558	124.399		0.16	0.16	1.32	1.06	0.25	83	83	72	1.50	1.97	93	0.013	103	104	48.7	0.26	0.72		100.2	160.3	157.0	59.9	160.1	233	74	74	72		1.001	5.986	601
769	123.719	124.561		0.16	0.16	1.31	1.07	0.25	83	83	72	1.50	1.95	93	0.013	104	104	48.3	0.35	0.68		100.3	160.4	157.1	59.9	160.1	240	74	74	72		1.001	5.666	569
770	123.879	124.724		0.16	0.16	1.31	1.07	0.25	83	83	72	1.50	1.97	94	0.014	100	101	48.0	0.26	0.72		100.5	160.7	157.3	59.9	160.4	247	75	75	72		1.001	5.988	603
771	124.039	124.886		0.16	0.16	1.32	1.07	0.25	83	83	72	1.50	1.96	96	0.012	108	109	47.7	0.38	0.70		100.9	161.1	157.7	59.9	160.8	255	75	75	72		1.001	5.828	589
772	124.200	125.048		0.16	0.16	1.32	1.07	0.25	83	83	72	1.50	1.96	97	0.014	101	101	47.4	0.25	0.68		101.5	161.7	158.2	59.8	161.3	265	75	75	72		1.001	5.662	575
773	124.361	125.210		0.16	0.16	1.31	1.06	0.25	83	83	72	1.50	1.96	98	0.012	109	109	46.8	0.61	0.70		102.2	162.6	159.0	59.8	162.1	274	75	75	72		1.001	5.822	596
774	124.521	125.371		0.16	0.16	1.30	1.06	0.25	84	83	72	1.50	1.98	100	0.013	104	104	46.5	0.28	0.68		103.0	163.3	159.8	59.8	162.8	281	75	76	72		1.001	5.667	584
775	124.681	125.534		0.16	0.16	1.30	1.06	0.25	84	83	72	1.50	1.98	101	0.013	104	106	46.1	0.41	0.70		103.9	164.1	160.6	59.8	163.7	289	76	76	72		1.001	5.829	606
776	124.841	125.695		0.16	0.16	1.31	1.06	0.25	84	83	72	1.50	1.96	102	0.014	100	101	45.7	0.44	0.72		104.6	165.0	161.3	59.8	164.5	295	76	76	72		1.001	5.982	627
777	125.001	125.856		0.16	0.16	1.30	1.06	0.25	84	83	72	1.50	1.97	103	0.013	104	105	45.1	0.56	0.78		105.5	165.7	162.1	59.9	165.3	296	76	76	72		1.001	6.460	682
778	125.161	126.018		0.16	0.16	1.30	1.06	0.25	83	83	72	1.50	1.98	104	0.013	105	105	44.6	0.48	0.71		106.4	166.8	163.1	59.8	166.3	294	76	76	72		1.001	5.928	632
779	125.321	126.180		0.16	0.16	1.30	1.06	0.25	83	83	72	1.50	1.97	104	0.014	101	101	44.3	0.36	0.68		107.6	167.9	164.1	59.8	167.4	293	76	77	72		1.001	5.686	612
780	125.480	126.341		0.16	0.16	1.31	1.06	0.25	84	83	72	1.50	1.97	104	0.015	97	97	43.7	0.55	0.68		108.6	169.0	165.1	59.8	168.4	293	77	77	72		1.001	5.663	616
781	125.641	126.502		0.16	0.16	1.31	1.07	0.25	83	83	72	1.50	1.97	105	0.015	98	98	43.4	0.33	0.72		109.8	170.1	166.1	59.8	169.6	293	77	77	72		1.001	5.986	658
782	125.801	126.664		0.16	0.16	1.32	1.07	0.25	84	83	72	1.50	1.95	104	0.013	104	105	43.0	0.42	0.68		110.6	171.1	167.1	59.8	170.5	293	77	77	72		1.001	5.660	627
783	125.961	126.827		0.16	0.16	1.31	1.07	0.25	84	83	72	1.50	1.97	105	0.013	104	106	42.5	0.46	0.68		111.4	171.9	167.9	59.9	171.3	293	77	77	72		1.001	5.663	632
784	126.121	126.989		0.16	0.16	1.31	1.06	0.25	84	83	72	1.50	1.97	105	0.014	101	102	41.9	0.66	0.72		112.4	172.9	168.9	59.9	172.3	293	77	77	72		1.001	5.981	673
785	126.281	127.150		0.16	0.16	1.31	1.06	0.25	84	83	72	1.50	1.96	105	0.013	104	105	41.4	0.50	0.68		113.3	173.8	169.8	59.9	173.2	294	77	78	72		1.001	5.662	642
786	126.441	127.312		0.16	0.16	1.31	1.06	0.25	84	83	72	1.50	1.97	105	0.014	101	102	40.9	0.49	0.70		114.2	174.7	170.8	59.9	174.1	294	78	78	72		1.001	5.825	666
787	126.602	127.474		0.16	0.16	1.31	1.06	0.25	84	83	72	1.50	1.98	106	0.013	105	106	40.3	0.55	0.70		115.2	175.6	171.5	59.9	175.1	295	78	78	72		1.001	5.825	672
788	126.762	127.636		0.16	0.16	1.31	1.06	0.25	84	83	72	1.50	1.96	106	0.014	101	102	39.9	0.42	0.70		116.1	176.7	172.5	59.9	176.0	296	78	78	72		1.001	5.824	677
789	126.922	127.797		0.16	0.16	1.30	1.05	0.25	84	83	72	1.50	1.97	106	0.014	101	101	39.3	0.57	0.68		117.0	177.4	173.2	59.9	176.9	298	78	78	72		1.001	5.660	663
790	127.083	127.958		0.16	0.16	1.31	1.06	0.25	84	83	72	1.50	1.96	106	0.014	101	101	38.8	0.50	0.68		118.0	178.4	174.3	59.8	177.9	299	78	78	72		1.001	5.667	670
791	127.243	128.121		0.16	0.16	1.31	1.06	0.25	84	83	72	1.50	1.96	106	0.014	101	102	38.2	0.64	0.70		118.8	179.2	175.0	59.8	178.6	318	78	78	72		1.001	5.820	692
792	127.403	128.281		0.16	0.16	1.31	1.05	0.25	84	83	72	1.50	1.97	108	0.015	97	97	37.5	0.65	0.74		119.7	179.9	175.7	59.7	179.4	335	79	79	72		1.001	6.144	736
793	127.562	128.442		0.16	0.16	1.30	1.05	0.25	84	83	73	1.50	1.97	111	0.013	104	105	36.9	0.62	0.69		120.4	180.5	176.2	59.7	180.0	345	79	79	73		1.001	5.770	695
794	127.722	128.603		0.16	0.16	1.30	1.05	0.25	84	83	73	1.50	1.99	112	0.014	101	102	36.4	0.51	0.68		121.3	181.5	177.2	59.6	180.9	351	79	79	73		1.001	5.672	689
795	127.881	128.764		0.16	0.16	1.31	1.05	0.25	84	83	72	1.50	1.98	113	0.013	104	105	35.9	0.55	0.66		122.5	182.7	178.4	59.5	182.1	335	79	79	72		1.001	5.499	675
796	128.041	128.925		0.16	0.16	1.30	1.06	0.25	84	83	73	1.50	1.97	101	0.015	97	97	35.7	0.19	0.72		123.6	183.6	179.3	59.5	183.0	305	78	79	73		1.001	5.984	740

Elapsed Time	Particulate Sampling Data																	Fuel Weight, lb		Flow, gpm		Temperature Data, oF									Stack			
	Gas Meter Cubic Feet (1)	Gas Meter Cubic Feet (2)	Gas Meter Cubic Feet (amb)	Sample Rate, cfm (1)	Sample Rate, cfm (2)	Orifice dH (1)	Orifice dH (2)	Orifice dH (amb)	Meter oF (1)	Meter oF (2)	Meter oF (amb)	Meter Vac. in. Hg. (1)	Meter Vac. in. Hg. (2)	Dilution Tunnel Temp.	Dilution Tunnel dP	Pro. Rate (%) (1)	Pro. Rate (%) (2)	Scale Reading	Weight Change	Load Side Liquid Flow Rate	Boiler Side Liquid Flow Rate (optional)	Thermopile ΔT	Boiler to Heat Exch. Temp.	Heat Exch to Boiler Temp.	Inlet Load Temp.	Outlet Load Temp.	Stack	Filter (1)	Filter (2)	Ambient		Specific Heat of Inlet Water (BTU/lb-°F)	Mass Flow Rate of Inlet Water (lb/min)	Heat Output, Btu
797	128.201	129.086		0.16	0.16	1.31	1.06	0.25	84	83	73	1.50	1.95	92	0.013	103	104	35.5	0.21	0.72		124.3	184.0	179.8	59.4	183.7	286	78	79	73		1.001	5.965	745
798	128.361	129.249		0.16	0.16	1.31	1.06	0.25	84	83	73	1.50	1.97	88	0.013	103	104	35.2	0.24	0.72		124.3	184.1	179.9	59.4	183.7	273	78	78	73		1.001	5.969	746
799	128.521	129.410		0.16	0.16	1.31	1.06	0.25	84	83	72	1.50	1.95	86	0.013	103	103	35.2	0.02	0.70		124.6	184.4	180.1	59.4	184.0	262	78	78	72		1.001	5.825	726
800	128.682	129.572		0.16	0.16	1.31	1.06	0.25	84	83	72	1.50	1.95	85	0.016	93	93	34.9	0.26	0.70		124.7	184.5	180.2	59.4	184.1	252	78	78	72		1.001	5.830	728
801	128.843	129.734		0.16	0.16	1.31	1.06	0.25	84	83	72	1.50	1.96	84	0.012	107	108	35.1	-0.22	0.68		124.8	184.5	180.4	59.4	184.1	244	77	78	72		1.001	5.666	708
802	129.003	129.897		0.16	0.16	1.31	1.06	0.25	84	83	72	1.50	1.96	83	0.015	95	97	35.0	0.12	0.68		124.8	184.5	180.2	59.4	184.2	237	77	77	72		1.001	5.662	708
803	129.163	130.058		0.16	0.16	1.31	1.05	0.25	84	83	72	1.50	1.96	83	0.014	99	99	34.8	0.24	0.72		124.9	184.6	180.3	59.3	184.2	231	77	77	72		1.001	5.963	748
804	129.324	130.220		0.16	0.16	1.31	1.06	0.25	84	83	72	1.50	1.95	82	0.014	99	99	35.0	-0.18	0.70		124.6	184.3	180.0	59.3	183.9	225	77	77	72		1.001	5.820	726
805	129.484	130.382		0.16	0.16	1.31	1.05	0.25	84	83	73	1.50	1.96	82	0.014	99	99	34.9	0.11	0.70		124.5	184.2	180.0	59.3	183.8	220	77	77	73		1.001	5.827	726
806	129.645	130.544		0.16	0.16	1.31	1.06	0.25	84	83	73	1.50	1.95	82	0.014	99	99	34.7	0.11	0.68		124.4	184.0	179.8	59.3	183.7	216	77	77	73		1.001	5.652	704
807	129.806	130.706		0.16	0.16	1.31	1.06	0.25	84	83	73	1.50	1.96	81	0.012	107	107	34.8	-0.05	0.71		124.2	183.7	179.6	59.3	183.5	213	76	77	73		1.001	5.952	740
808	129.966	130.868		0.16	0.16	1.31	1.06	0.25	84	83	73	1.50	1.95	80	0.013	102	103	34.9	-0.06	0.71		123.9	183.7	179.4	59.4	183.3	210	76	76	73		1.001	5.876	729
809	130.126	131.030		0.16	0.16	1.31	1.06	0.25	84	83	73	1.50	1.96	80	0.013	102	103	34.8	0.05	0.70		123.8	183.5	179.3	59.4	183.3	206	76	76	73		1.001	5.822	722
810	130.287	131.192		0.16	0.16	1.31	1.06	0.25	84	83	73	1.50	1.95	79	0.013	103	103	34.8	-0.02	0.72		123.6	183.3	179.1	59.4	183.0	202	76	76	73		1.001	5.988	741
811	130.447	131.354		0.16	0.16	1.30	1.06	0.25	84	83	73	1.50	1.96	79	0.014	98	99	34.8	0.07	0.68		123.4	183.1	178.9	59.4	182.8	198	76	76	73		1.001	5.660	699
812	130.608	131.516		0.16	0.16	1.30	1.06	0.25	84	83	73	1.50	1.96	79	0.014	99	99	34.9	-0.09	0.72		123.1	182.8	178.6	59.4	182.5	194	76	76	73		1.001	5.984	737
813	130.768	131.678		0.16	0.16	1.30	1.06	0.25	84	83	73	1.50	1.94	79	0.016	92	93	34.8	0.07	0.68		122.8	182.5	178.3	59.4	182.3	190	76	76	73		1.001	5.662	696
814	130.928	131.840		0.16	0.16	1.31	1.07	0.25	84	83	72	1.50	1.95	79	0.014	98	99	34.9	-0.14	0.72		122.6	182.4	178.2	59.4	182.0	187	75	76	72		1.001	5.986	735
815	131.089	132.003		0.16	0.16	1.31	1.06	0.25	84	83	73	1.50	1.96	79	0.014	99	100	34.9	0.06	0.72		122.5	182.2	178.0	59.5	181.9	184	75	75	73		1.001	5.984	734
816	131.250	132.164		0.16	0.16	1.31	1.06	0.25	84	83	73	1.50	1.94	79	0.014	99	99	34.9	0.01	0.70		122.4	182.1	177.9	59.4	181.8	181	75	75	73		1.001	5.822	713
817	131.410	132.327		0.16	0.16	1.31	1.06	0.25	84	83	73	1.50	1.96	79	0.013	102	104	35.0	-0.14	0.70		122.1	181.8	177.6	59.4	181.5	178	75	75	73		1.001	5.820	711
818	131.571	132.489		0.16	0.16	1.30	1.06	0.25	84	83	73	1.50	1.96	79	0.013	103	103	34.8	0.21	0.70		121.9	181.5	177.3	59.4	181.2	175	75	75	73		1.001	5.822	710
819	131.731	132.651		0.16	0.16	1.31	1.06	0.25	84	83	73	1.50	1.95	79	0.013	102	103	34.8	0.00	0.70		121.6	181.2	177.0	59.4	180.9	172	75	75	73		1.001	5.824	709
820	131.891	132.813		0.16	0.16	1.32	1.06	0.25	84	83	73	1.50	1.95	79	0.013	102	103	34.9	-0.14	0.68		121.2	180.9	176.7	59.4	180.6	169	75	75	73		1.001	5.665	688
821	132.052	132.975		0.16	0.16	1.31	1.06	0.25	84	83	73	1.50	1.96	79	0.011	112	112	34.8	0.12	0.72		121.0	180.6	176.5	59.4	180.4	167	75	75	73		1.001	5.988	725
822	132.213	133.137		0.16	0.16	1.31	1.06	0.25	84	83	73	1.50	1.94	79	0.013	103	103	34.8	0.03	0.69		120.8	180.4	176.2	59.4	180.1	164	75	75	73		1.001	5.747	695
823	132.373	133.300		0.16	0.16	1.31	1.06	0.25	84	83	73	1.50	1.96	78	0.013	102	103	34.9	-0.12	0.69		120.4	180.2	176.0	59.4	179.8	162	75	75	73		1.001	5.769	698
824	132.534	133.462		0.16	0.16	1.31	1.05	0.25	84	83	73	1.50	1.96	78	0.012	107	107	34.8	0.10	0.68		120.4	180.0	175.9	59.4	179.8	159	75	75	73		1.001	5.674	684
825	132.694	133.624		0.16	0.16	1.31	1.06	0.25	84	83	72	1.50	1.94	78	0.015	95	96	34.9	-0.11	0.68		120.1	179.8	175.6	59.4	179.5	157	75	75	72		1.001	5.663	681
826	132.855	133.786		0.16	0.16	1.31	1.06	0.25	84	83	73	1.50	1.96	78	0.014	99	99	34.9	0.02	0.68		119.9	179.4	175.4	59.3	179.2	155	74	75	73		1.001	5.660	680
827	133.016	133.949		0.16	0.16	1.31	1.06	0.25	84	83	73	1.50	1.94	78	0.015	95	96	34.8	0.12	0.70		119.6	179.0	175.0	59.2	178.8	153	74	75	73		1.001	5.825	697
828	133.177	134.110		0.16	0.16	1.31	1.06	0.25	84	83	72	1.50	1.94	79	0.014	99	99	34.8	-0.01	0.66		119.2	178.7	174.6	59.2	178.4	151	74	74	72		1.001	5.504	657
829	133.338	134.272		0.16	0.16	1.31	1.06	0.25	84	83	72	1.50	1.95	78	0.013	103	103	34.9	-0.09	0.70		119.0	178.4	174.3	59.1	178.2	149	74	74	72		1.001	5.830	695
830	133.499	134.435		0.16	0.16	1.31	1.06	0.25	84	83	72	1.50	1.96	79	0.015	96	96	34.8	0.05	0.68		119.0	178.3	174.2	59.1	178.0	147	74	74	72		1.001	5.663	675
831	133.659	134.597		0.16	0.16	1.31	1.07	0.25	84	83	72	1.50	1.96	78	0.013	102	103	34.8	-0.03	0.68		118.8	178.1	174.0	59.1	177.8	145	74	74	72		1.001	5.664	674
832	133.819	134.759		0.16	0.16	1.31	1.06	0.25	84	83	72	1.50	1.96	78	0.013	102	103	34.8	0.07	0.70		118.4	177.8	173.7	59.1	177.5	144	74	74	72		1.001	5.827	691
833	133.980	134.921		0.16	0.16	1.30	1.06	0.25	84	83	73	1.50	1.94	78	0.014	99	99	34.9	-0.15	0.68		118.2	177.6	173.5	59.0	177.3	142	74	74	73		1.001	5.663	670
834	134.141	135.083		0.16	0.16	1.31	1.06	0.25	84	83	73	1.50	1.96	78	0.014	99	99	34.9	-0.02	0.70		117.8	177.1	173.1	59.0	176.9	140	74	74	73		1.001	5.820	687
835	134.302	135.246		0.16	0.16	1.30	1.06	0.25	84	83	73	1.50	1.96	78	0.013	103	103	35.0	-0.08	0.68		117.5	176.8	172.8	59.0	176.6	138	74	74	73		1.001	5.662	666
836	134.462	135.408		0.16	0.16	1.30	1.06	0.25	84	83	72	1.50	1.95	78	0.013	102	103	34.9	0.06	0.74		117.2	176.5	172.5	59.1	176.3	137	74	74	72		1.001	6.134	720
837	134.623	135.570		0.16	0.16	1.30	1.06	0.25	84	83	73	1.50	1.94	78	0.011	111	112	34.9	0.07	0.72		116.9	176.2	172.3	59.1	176.0	154	74	74	73		1.001	5.983	700
838	134.783	135.732		0.16	0.16	1.29	1.05	0.25	84	83	72	1.50	1.98	82	0.013	102	103	34.7	0.19	0.69		116.4	175.8	171.9	59.2	175.7	178	75	74	72		1.001	5.741	669
839	134.943	135.893		0.16	0.16	1.30	1.06	0.25	84	83	73	1.50	1.97	88	0.014	99	99	34.4	0.25	0.68		115.9	175.4	171.5	59.3	175.3	171	74	74	73		1.001	5.660	657
840	135.103	136.056		0.16	0.16	1.31	1.06	0.25	84	83	73	1.50	1.94	81	0.013	102	104	34.4	0.06	0.70		115.6	175.2	171.3	59.4	175.0	160	74	74	73		1.001	5.824	674
841	135.264	136.218		0.16	0.16	1.31	1.06	0.25	84	83	73	1.50	1.95	79	0.014	99	99	34.6	-0.18	0.70		115.3	175.0	171.1	59.4	174.7	152	74	74	73		1.001	5.821	672
842	135.425	136.380		0.16	0.16	1.31	1.06	0.25	84	83	73	1.50	1.96	78	0.012	107	107	34.5	0.04	0.70		115.0	174.8	170.8	59.5	174.5	147	74	74	73		1.001	5.825	671
843	135.585	136.542		0.16	0.16	1.31	1.06	0.25	84	83	73	1.50	1.96	78	0.013	102	103	34.4	0.15	0.68		114.7	174.5	170.6	59.5	174.2	143	74	74	73		1.001	5.662	650
844	135.746	136.705		0.16	0.16	1.31	1.06	0.25	84	84	73	1.50	1.94	78	0.014	99	100	34.5	-0.14	0.68		114.3	174.1	170.2	59.5	173.9	140	74	74	73		1.001	5.664	648
845	135.906	136.867		0.16	0.16	1.31	1.06	0.25	84	83	73	1.50	1.96	78	0.013	102	103	34.6	-0.11	0.68		114.1	173.9	170.0	59.5	173.6	138	74	74	73		1.001	5.661	647
846	136.068	137.029		0.16	0.16	1.31	1.06	0.25	84	84	73	1.50	1.96	78	0.014	99	99	34.5	0.09	0.70		113.7	173.5	169.6	59.5	173.3	136	74	74	73		1.001	5.822	663
847	136.228	137.192		0.16	0.16	1.31	1.06	0.25	84	83	72	1.50	1.94	77	0.014	98	100	34.5	0.05	0.70		113.4	173.2	169.4	59.6	173.0	134	74	74	72		1.001	5.822	661
848	136.388	137.355		0.16	0.16	1.31	1.07	0.25	84	83	73	1.50	1.95	77	0.014	98	100	34.5	-0.07	0.68		113.1	173.0	169.2	59.6	172.7	132	74	74	73		1.001	5.664	641
849	136.549	137.517		0.16	0.16	1.31	1.06	0.25	84	83	73	1.50	1.94	77	0.015	95	96	34.5	-0.01	0.72		112.8	172.6	168.8	59.6	172.4	131	74	74	73		1.001	5.998	677
850	136.710	137.679		0.16	0.16	1.31	1.06	0.25	84	83	72	1.50	1.96	78	0.014	99	99	34.6	-0.06	0.70		112.4	172.3	168.4	59.6	172.1	129	74	74	72		1.001	5.854	659
851	136.871	137.841		0.16	0.16	1.31	1.07	0.25	84	83	72	1.50	1.95	77	0.015	95	96	34.6	-0.04	0.69		112.2	172.1	168.2	59.6	171.8	128	74	74	72		1.001	5.733	644
852	137.031	138.004		0.16	0.16	1.30	1.07	0.25	84	84	72	1.50	1.95	78	0.012	106	108	34.6	0.08	0.68		111.9	171.8	168.0	59.6	171.5	127	74	74	72		1.001	5.659	634
853	137.192	138.166		0.16	0.16	1.30	1.06	0.25	84	84	72	1.50	1.96	77	0.012	107	107	34.6	-0.02	0.72		111.6	171.5	167.7	59.7	171.3	125	74	74	72		1.001	5.987	669
854	137.353	138.328		0.16	0.16	1.31	1.07	0.25	84	84	72	1.50	1.94	77	0.013	102	103	34.6	0.00	0.68		111.2	171.0	167.3	59.7	170.8	124	74	74	72		1.001	5.666	631
855	137.514	138.490		0.16	0.16	1.31	1.06	0.25	84	84	72	1.50	1.96	77	0.014	99	99	34.6	0.00	0.70		110.8	170.8	167.0	59.7	170.5	123	74	74	72		1.001	5.824	646
856	137.674	138.653		0.16	0.16	1.31	1.06	0.25	84	84	72	1.50	1.95	77	0.014	98	99	34.6	-0.07	0.74		110.6	170.5	166.7	59.7	170.3	122	74	74	72		1.001	6.151	681
857	137.835	138.816		0.16	0.16	1.31	1.06	0.25	84	84	72	1.50	1.96	77	0.011	111	112	34.5	0.09	0.72		110.2	170.2	166.4	59.7	170.0	121	74	74	72		1.001	5.991	661
858	137.996	138.978		0.16	0.16	1.31	1.06	0.25	84	84	73	1.50	1.96	77	0.015	95	95	34.5	0.05	0.70		110.0	170.0	166.1	59.7	169.7	120	73	74	73		1.001	5.825	641

Elapsed Time	Particulate Sampling Data																	Fuel Weight, lb		Flow, gpm		Temperature Data, oF									Stack			
	Gas Meter Cubic Feet (1)	Gas Meter Cubic Feet (2)	Gas Meter Cubic Feet (amb)	Sample Rate, cfm (1)	Sample Rate, cfm (2)	Orifice dH (1)	Orifice dH (2)	Orifice dH (amb)	Meter oF (1)	Meter oF (2)	Meter oF (amb)	Meter Vac. in. Hg. (1)	Meter Vac. in. Hg. (2)	Dilution Tunnel Temp.	Dilution Tunnel dP	Pro. Rate (%) (1)	Pro. Rate (%) (2)	Scale Reading	Weight Change	Load Side Liquid Flow Rate	Boiler Side Liquid Flow Rate (optional)	Thermopile ΔT	Boiler to Heat Exch. Temp.	Heat Exch to Boiler Temp.	Inlet Load Temp.	Outlet Load Temp.	Stack	Filter (1)	Filter (2)	Ambient		Specific Heat of Inlet Water (BTU/lb-°F)	Mass Flow Rate of Inlet Water (lb/min)	Heat Output, Btu
859	138.156	139.140		0.16	0.16	1.30	1.06	0.25	84	84	72	1.50	1.95	78	0.014	98	99	34.6	-0.10	0.72		109.7	169.6	165.8	59.7	169.4	119	73	74	72		1.001	5.991	658
860	138.317	139.302		0.16	0.16	1.30	1.07	0.25	84	84	72	1.50	1.96	78	0.011	111	112	34.6	-0.03	0.68		109.5	169.4	165.6	59.7	169.1	118	73	74	72		1.001	5.668	621
861	138.478	139.465		0.16	0.16	1.30	1.06	0.25	84	84	72	1.50	1.94	78	0.016	92	93	34.6	0.01	0.68		109.2	169.0	165.2	59.6	168.8	117	73	74	72		1.001	5.665	619
862	138.638	139.628		0.16	0.16	1.30	1.06	0.25	84	83	72	1.50	1.95	78	0.014	98	100	34.6	0.05	0.70		108.9	168.7	164.9	59.6	168.4	116	73	73	72		1.001	5.837	636
863	138.799	139.789		0.16	0.16	1.31	1.07	0.25	84	84	72	1.50	1.95	78	0.014	99	98	34.6	-0.05	0.70		108.6	168.3	164.6	59.5	168.1	115	73	73	72		1.001	5.809	632
864	138.959	139.952		0.16	0.16	1.31	1.07	0.25	84	83	72	1.50	1.94	78	0.014	98	100	34.6	0.02	0.70		108.3	167.9	164.2	59.4	167.7	114	73	73	72		1.001	5.826	632
865	139.120	140.114		0.16	0.16	1.31	1.07	0.25	84	84	72	1.50	1.96	78	0.014	99	99	34.5	0.05	0.68		108.1	167.7	164.0	59.3	167.5	113	73	73	72		1.001	5.668	614
866	139.281	140.277		0.16	0.16	1.30	1.06	0.25	84	83	72	1.50	1.94	78	0.015	95	96	34.6	-0.06	0.72		107.9	167.4	163.7	59.3	167.2	112	73	73	72		1.001	5.990	647
867	139.441	140.439		0.16	0.16	1.31	1.06	0.25	84	83	72	1.50	1.94	77	0.013	102	103	34.6	0.00	0.68		107.7	167.0	163.3	59.2	166.9	111	73	73	72		1.001	5.663	611
868	139.602	140.601		0.16	0.16	1.31	1.06	0.25	84	84	72	1.50	1.94	77	0.013	102	103	34.7	-0.06	0.72		107.3	166.8	163.0	59.2	166.5	111	73	73	72		1.001	5.986	643
869	139.762	140.764		0.16	0.16	1.31	1.06	0.25	84	84	72	1.50	1.94	78	0.014	98	100	34.5	0.13	0.72		107.1	166.6	162.8	59.2	166.3	140	73	73	72		1.001	5.990	642
870	139.923	140.927		0.16	0.16	1.31	1.06	0.25	84	83	72	1.50	1.95	81	0.015	96	97	34.6	-0.10	0.68		106.8	166.2	162.6	59.3	166.1	147	74	74	72		1.001	5.666	606
871	140.084	141.089		0.16	0.16	1.31	1.06	0.25	84	83	72	1.50	1.95	81	0.014	99	99	34.5	0.12	0.68		106.4	165.9	162.2	59.3	165.7	135	73	74	72		1.001	5.661	603
872	140.244	141.251		0.16	0.16	1.32	1.06	0.25	84	84	72	1.50	1.95	78	0.013	102	103	34.4	0.07	0.70		106.0	165.5	161.9	59.3	165.4	128	73	74	72		1.001	5.825	618
873	140.405	141.413		0.16	0.16	1.32	1.07	0.25	84	84	72	1.50	1.94	77	0.012	107	107	34.4	0.04	0.70		105.7	165.3	161.6	59.4	165.0	123	73	73	72		1.001	5.831	617
874	140.566	141.576		0.16	0.16	1.31	1.06	0.25	84	83	72	1.50	1.96	77	0.012	107	108	34.5	-0.07	0.72		105.4	165.0	161.4	59.4	164.8	119	73	73	72		1.001	5.988	632
875	140.726	141.738		0.16	0.16	1.32	1.06	0.25	84	83	72	1.50	1.96	77	0.013	102	103	34.5	0.00	0.70		105.0	164.7	161.1	59.4	164.5	116	73	73	72		1.001	5.826	613
876	140.887	141.900		0.16	0.16	1.32	1.06	0.25	84	83	72	1.50	1.95	77	0.013	102	103	34.4	0.08	0.70		104.7	164.4	160.8	59.5	164.1	114	73	73	72		1.001	5.821	610
877	141.048	142.063		0.16	0.16	1.31	1.07	0.25	84	83	72	1.50	1.95	77	0.014	99	100	34.4	0.02	0.71		104.4	164.2	160.6	59.5	163.9	113	73	73	72		1.001	5.924	619
878	141.209	142.225		0.16	0.16	1.32	1.07	0.25	84	83	72	1.50	1.94	77	0.014	99	99	34.5	-0.16	0.69		104.1	163.9	160.3	59.5	163.7	112	73	73	72		1.001	5.719	596
879	141.370	142.389		0.16	0.16	1.31	1.06	0.25	84	83	72	1.50	1.95	77	0.014	99	100	34.3	0.21	0.69		103.8	163.5	160.0	59.5	163.3	111	73	73	72		1.001	5.780	601
880	141.531	142.551		0.16	0.16	1.31	1.06	0.25	84	83	72	1.50	1.96	77	0.012	107	107	34.4	-0.13	0.66		103.4	163.2	159.6	59.5	162.9	110	73	73	72		1.001	5.505	570
881	141.692	142.713		0.16	0.16	1.30	1.07	0.25	84	83	72	1.50	1.94	77	0.014	99	99	34.4	0.09	0.70		103.1	162.9	159.3	59.6	162.6	109	73	73	72		1.001	5.827	601
882	141.852	142.875		0.16	0.16	1.30	1.07	0.25	84	83	72	1.50	1.96	77	0.014	98	99	34.3	0.03	0.68		102.8	162.6	159.1	59.5	162.4	108	73	73	72		1.001	5.662	583
883	142.013	143.038		0.16	0.16	1.31	1.07	0.25	84	83	72	1.50	1.94	77	0.012	107	108	34.3	-0.02	0.68		102.5	162.3	158.8	59.6	162.1	107	73	73	72		1.001	5.660	581
884	142.174	143.201		0.16	0.16	1.31	1.06	0.25	84	83	72	1.50	1.95	77	0.014	99	100	34.4	-0.07	0.68		102.1	162.0	158.4	59.6	161.7	107	73	73	72		1.001	5.665	579
885	142.334	143.363		0.16	0.16	1.31	1.06	0.25	84	83	72	1.50	1.96	77	0.012	106	107	34.4	0.05	0.70		101.9	161.7	158.2	59.6	161.5	126	73	73	72		1.001	5.826	595
886	142.495	143.525		0.16	0.16	1.30	1.06	0.25	84	83	72	1.50	1.96	78	0.015	95	96	34.3	0.03	0.68		101.6	161.4	158.0	59.6	161.2	142	73	73	72		1.001	5.665	577
887	142.656	143.687		0.16	0.16	1.30	1.06	0.25	84	83	72	1.50	1.95	83	0.013	103	103	34.3	0.02	0.68		101.3	161.1	157.7	59.6	160.9	155	73	73	72		1.001	5.666	575
888	142.816	143.850		0.16	0.16	1.30	1.06	0.25	84	83	72	1.50	1.95	83	0.015	95	97	34.3	0.06	0.68		101.0	160.8	157.4	59.6	160.6	162	73	74	72		1.001	5.660	572
889	142.977	144.011		0.16	0.16	1.31	1.07	0.25	84	83	72	1.50	1.95	84	0.014	99	99	34.1	0.15	0.70		100.7	160.5	157.1	59.6	160.3	168	73	74	72		1.001	5.830	587
890	143.137	144.174		0.16	0.16	1.31	1.07	0.25	84	83	72	1.50	1.96	84	0.014	99	100	34.2	-0.13	0.72		100.3	160.2	156.8	59.7	160.0	174	74	74	72		1.001	5.969	602
891	143.298	144.336		0.16	0.16	1.31	1.07	0.25	84	83	72	1.50	1.96	85	0.014	99	100	33.9	0.29	0.68		100.1	160.1	156.7	59.7	159.8	182	74	74	72		1.001	5.645	566
892	143.458	144.499		0.16	0.16	1.31	1.07	0.25	84	83	72	1.50	1.94	87	0.014	99	101	33.9	0.03	0.68		99.9	159.9	156.5	59.7	159.6	191	74	74	72		1.001	5.700	570
893	143.619	144.661		0.16	0.16	1.31	1.06	0.25	84	83	72	1.50	1.96	89	0.014	100	100	33.9	0.07	0.70		99.8	159.7	156.3	59.7	159.5	199	74	74	72		1.001	5.827	582
894	143.779	144.823		0.16	0.16	1.31	1.06	0.25	84	83	72	1.50	1.95	90	0.014	99	100	33.6	0.24	0.68		99.7	159.6	156.2	59.7	159.4	208	74	74	72		1.001	5.664	565
895	143.940	144.985		0.16	0.16	1.31	1.07	0.25	84	83	72	1.50	1.96	91	0.016	94	94	33.2	0.37	0.68		99.6	159.6	156.2	59.7	159.3	218	74	74	72		1.001	5.666	565
896	144.100	145.148		0.16	0.16	1.32	1.06	0.25	84	83	72	1.50	1.97	92	0.013	103	105	33.0	0.25	0.68		99.7	159.7	156.3	59.7	159.3	226	74	74	72		1.001	5.668	566
897	144.261	145.310		0.16	0.16	1.31	1.06	0.25	84	83	72	1.50	1.96	93	0.014	100	100	32.6	0.35	0.72		100.0	159.9	156.5	59.6	159.6	233	74	75	72		1.001	5.990	600
898	144.421	145.471		0.16	0.16	1.31	1.06	0.25	84	83	72	1.50	1.97	94	0.014	100	100	32.4	0.19	0.74		100.3	160.1	156.7	59.6	159.8	240	75	75	72		1.001	6.153	618
899	144.582	145.633		0.16	0.16	1.32	1.06	0.25	84	83	72	1.50	1.97	95	0.014	100	101	32.2	0.28	0.70		100.7	160.5	157.1	59.4	160.2	245	75	75	72		1.001	5.828	588
900	144.742	145.796		0.16	0.16	1.31	1.06	0.25	84	83	72	1.50	1.96	96	0.014	100	101	31.9	0.23	0.74		101.2	161.2	157.6	59.4	160.7	250	75	75	72		1.001	6.151	623
901	144.902	145.958		0.16	0.16	1.31	1.06	0.25	84	83	72	1.50	1.96	96	0.014	100	101	31.6	0.32	0.70		101.9	161.8	158.1	59.4	161.3	253	75	75	72		1.001	5.830	595
902	145.063	146.119		0.16	0.16	1.31	1.06	0.25	84	83	72	1.50	1.96	96	0.015	97	97	31.3	0.35	0.70		102.5	162.3	158.7	59.3	161.9	257	75	75	72		1.001	5.825	598
903	145.224	146.281		0.16	0.16	1.31	1.06	0.25	84	83	72	1.50	1.97	97	0.013	104	105	30.9	0.38	0.70		103.2	162.9	159.2	59.3	162.5	260	75	76	72		1.001	5.828	602
904	145.384	146.443		0.16	0.16	1.31	1.06	0.25	84	83	72	1.50	1.97	98	0.014	100	101	30.6	0.27	0.68		104.0	163.8	160.1	59.4	163.4	262	75	76	72		1.001	5.668	590
905	145.544	146.604		0.16	0.16	1.31	1.05	0.25	84	83	72	1.50	1.97	98	0.013	104	104	30.5	0.16	0.70		104.6	164.4	160.7	59.4	164.0	266	76	76	72		1.001	5.808	608
906	145.705	146.766		0.16	0.16	1.31	1.06	0.25	84	83	72	1.50	1.98	99	0.013	105	105	30.1	0.40	0.70		105.4	165.3	161.6	59.4	164.8	268	76	76	72		1.001	5.870	619
907	145.865	146.927		0.16	0.16	1.31	1.06	0.25	84	83	72	1.50	1.96	99	0.012	108	108	29.8	0.29	0.68		106.2	166.2	162.4	59.5	165.6	270	76	76	72		1.001	5.662	602
908	146.025	147.089		0.16	0.16	1.30	1.06	0.25	84	83	72	1.50	1.97	100	0.014	100	101	29.3	0.48	0.68		107.0	167.1	163.3	59.5	166.6	275	76	76	72		1.001	5.663	607
909	146.185	147.250		0.16	0.16	1.31	1.05	0.25	84	83	72	1.50	1.98	100	0.016	94	94	28.9	0.33	0.70		107.9	167.9	164.1	59.5	167.4	287	76	76	72		1.001	5.825	629
910	146.345	147.411		0.16	0.16	1.31	1.06	0.25	84	83	72	1.50	1.98	101	0.015	97	97	28.5	0.40	0.70		108.6	168.8	164.9	59.5	168.1	297	76	77	72		1.001	5.830	634
911	146.505	147.572		0.16	0.16	1.31	1.06	0.25	84	83	72	1.50	1.97	103	0.015	97	97	28.1	0.46	0.72		109.4	169.5	165.7	59.6	169.0	304	77	77	72		1.001	5.991	656
912	146.665	147.734		0.16	0.16	1.31	1.06	0.25	84	83	72	1.50	1.98	104	0.015	97	98	27.7	0.37	0.72		110.4	170.6	166.8	59.6	170.1	310	77	77	72		1.001	5.991	662
913	146.825	147.895		0.16	0.16	1.31	1.05	0.25	84	83	72	1.50	1.97	105	0.014	101	101	27.4	0.31	0.70		111.4	171.6	167.7	59.7	171.0	315	77	77	72		1.001	5.825	649
914	146.985	148.056		0.16	0.16	1.31	1.05	0.25	84	83	72	1.50	1.99	106	0.015	97	98	27.0	0.43	0.70		112.5	172.8	168.8	59.7	172.2	316	77	77	72		1.001	5.825	656
915	147.145	148.218		0.16	0.16	1.31	1.05	0.25	84	83	72	1.50	1.98	107	0.014	101	102	26.4	0.54	0.70		113.5	173.7	169.8	59.7	173.2	312	77	77	72		1.001	5.825	662
916	147.305	148.378		0.16	0.16	1.31	1.05	0.25	84	83	72	1.50	1.99	107	0.014	101	100	26.3	0.10	0.72		114.7	175.0	171.0	59.7	174.4	309	77	78	72		1.001	5.983	687
917	147.465	148.538		0.16	0.16	1.31	1.05	0.25	84	83	72	1.50	1.99	107	0.014	101	100	25.7	0.61	0.70		115.8	176.0	172.0	59.7	175.5	307	77	78	72		1.001	5.829	676
918	147.625	148.700		0.16	0.16	1.31	1.05	0.25	84	83	72	1.50	1.98	107	0.014	101	102	25.3	0.47	0.68		116.6	177.0	172.9	59.7	176.3	306	78	78	72		1.001	5.663	661
919	147.786	148.861		0.16	0.16	1.31	1.05	0.25	84	83	72	1.50	1.99	107	0.014	101	101	24.9	0.31	0.71		117.6	178.0	173.8	59.7	177.4	307	78	78	72		1.001	5.898	695
920	147.946	149.021		0.16	0.16	1.31	1.05	0.25	84	83	72	1.50	1.98	107	0.013	105	104	24.4	0.51	0.68		118.5	178.9	174.6	59.8	178.3	307	78	78	72		1.001	5.664	672

Elapsed Time	Particulate Sampling Data																	Fuel Weight, lb		Flow, gpm		Temperature Data, oF									Stack			
	Gas Meter Cubic Feet (1)	Gas Meter Cubic Feet (2)	Gas Meter Cubic Feet (amb)	Sample Rate, cfm (1)	Sample Rate, cfm (2)	Orifice dH (1)	Orifice dH (2)	Orifice dH (amb)	Meter oF (1)	Meter oF (2)	Meter oF (amb)	Meter Vac. in. Hg. (1)	Meter Vac. in. Hg. (2)	Dilution Tunnel Temp.	Dilution Tunnel dP	Pro. Rate (%) (1)	Pro. Rate (%) (2)	Scale Reading	Weight Change	Load Side Liquid Flow Rate	Boiler Side Liquid Flow Rate (optional)	Thermopile ΔT	Boiler to Heat Exch. Temp.	Heat Exch to Boiler Temp.	Inlet Load Temp.	Outlet Load Temp.	Stack	Filter (1)	Filter (2)	Ambient		Specific Heat of Inlet Water (BTU/lb-°F)	Mass Flow Rate of Inlet Water (lb/min)	Heat Output, Btu
921	148.105	149.182		0.16	0.16	1.30	1.05	0.25	84	83	72	1.50	1.97	107	0.014	100	101	24.0	0.44	0.68		119.4	179.7	175.4	59.8	179.2	309	78	78	72		1.001	5.664	677
922	148.265	149.344		0.16	0.16	1.30	1.05	0.25	84	83	72	1.50	1.98	107	0.015	97	98	23.5	0.47	0.70		120.2	180.5	176.2	59.8	180.0	315	78	78	72		1.001	5.826	701
923	148.425	149.503		0.16	0.16	1.30	1.05	0.25	84	83	72	1.50	1.99	107	0.015	97	96	23.2	0.35	0.68		120.9	181.4	177.2	59.9	180.8	324	78	78	72		1.001	5.662	686
924	148.585	149.664		0.16	0.16	1.30	1.05	0.25	84	83	72	1.50	1.99	109	0.015	98	98	22.7	0.49	0.68		121.8	182.5	178.2	59.9	181.8	326	78	78	72		1.001	5.663	691
925	148.745	149.825		0.16	0.16	1.31	1.06	0.25	84	83	72	1.50	1.98	103	0.013	104	105	22.7	0.03	0.70		122.9	183.3	179.0	59.9	182.9	295	78	78	72		1.001	5.820	716
926	148.905	149.986		0.16	0.16	1.30	1.04	0.25	84	83	72	1.50	1.97	92	0.015	96	96	22.3	0.34	0.70		123.4	183.9	179.4	59.9	183.3	276	78	78	72		1.001	5.821	719
927	149.065	150.147		0.16	0.16	1.30	1.05	0.25	84	83	72	1.50	1.97	88	0.013	103	103	22.3	0.03	0.68		123.7	183.9	179.5	59.8	183.5	265	78	78	72		1.001	5.660	701
928	149.225	150.307		0.16	0.16	1.31	1.04	0.25	84	83	72	1.50	1.96	85	0.012	107	106	22.1	0.15	0.74		123.8	183.9	179.6	59.8	183.6	254	77	78	72		1.001	6.146	762
929	149.385	150.469		0.16	0.16	1.30	1.04	0.25	84	83	72	1.50	1.98	84	0.014	99	100	21.9	0.22	0.68		123.9	183.9	179.5	59.7	183.6	246	77	77	72		1.001	5.659	702
930	149.545	150.629		0.16	0.16	1.31	1.04	0.25	84	83	73	1.50	1.96	83	0.013	102	102	22.0	-0.05	0.70		123.9	183.9	179.6	59.6	183.5	238	77	77	73		1.001	5.827	723
931	149.705	150.790		0.16	0.16	1.31	1.04	0.25	84	83	72	1.50	1.95	83	0.014	99	99	21.9	0.08	0.67		124.0	183.8	179.5	59.6	183.6	232	77	77	72		1.001	5.546	689
932	149.865	150.951		0.16	0.16	1.30	1.04	0.25	84	83	73	1.50	1.98	82	0.014	99	99	21.8	0.12	0.72		124.0	183.8	179.4	59.5	183.5	226	77	77	73		1.001	6.031	749
933	150.026	151.111		0.16	0.16	1.30	1.03	0.25	84	83	72	1.50	1.97	82	0.014	99	98	21.8	-0.06	0.70		124.0	183.7	179.3	59.5	183.5	221	77	77	72		1.001	5.813	722
934	150.186	151.271		0.16	0.16	1.30	1.04	0.25	84	83	72	1.50	1.97	81	0.014	98	98	21.8	0.05	0.66		123.9	183.7	179.3	59.4	183.3	217	77	77	72		1.001	5.513	684
935	150.347	151.432		0.16	0.16	1.30	1.04	0.25	84	83	73	1.50	1.98	81	0.014	99	99	21.6	0.16	0.70		123.7	183.4	179.1	59.4	183.1	212	76	77	73		1.001	5.823	721
936	150.507	151.593		0.16	0.16	1.31	1.04	0.25	84	83	73	1.50	1.96	81	0.013	102	103	21.7	-0.13	0.72		123.5	183.1	178.8	59.4	182.9	208	76	76	73		1.001	5.982	740
937	150.667	151.753		0.16	0.16	1.31	1.04	0.25	84	83	72	1.50	1.97	80	0.014	98	98	21.8	-0.12	0.72		123.3	183.0	178.6	59.4	182.7	205	76	76	72		1.001	5.983	739
938	150.827	151.913		0.16	0.16	1.30	1.04	0.25	84	83	72	1.50	1.97	80	0.013	102	102	21.7	0.14	0.72		123.3	182.9	178.6	59.4	182.7	201	76	76	72		1.001	5.986	739
939	150.987	152.074		0.16	0.16	1.30	1.04	0.25	84	83	73	1.50	1.97	79	0.014	98	99	21.7	0.04	0.70		122.9	182.6	178.2	59.4	182.2	197	76	76	73		1.001	5.827	717
940	151.147	152.234		0.16	0.16	1.30	1.04	0.25	84	83	72	1.50	1.97	79	0.014	98	98	21.7	-0.05	0.70		122.6	182.3	178.0	59.4	182.0	193	76	76	72		1.001	5.827	715
941	151.307	152.395		0.16	0.16	1.30	1.04	0.25	84	83	72	1.50	1.98	79	0.015	95	95	21.7	0.03	0.70		122.4	182.1	177.8	59.4	181.8	190	76	76	72		1.001	5.824	714
942	151.467	152.556		0.16	0.16	1.30	1.04	0.25	84	83	73	1.50	1.96	79	0.014	98	99	21.7	0.02	0.68		122.3	181.9	177.6	59.4	181.7	187	75	76	73		1.001	5.664	693
943	151.627	152.716		0.16	0.16	1.29	1.04	0.25	84	83	73	1.50	1.95	79	0.015	95	95	21.7	0.00	0.66		122.1	181.8	177.5	59.4	181.5	184	75	75	73		1.001	5.502	672
944	151.787	152.876		0.16	0.16	1.31	1.04	0.25	84	83	73	1.50	1.96	78	0.013	102	102	21.7	-0.06	0.68		121.8	181.5	177.3	59.4	181.3	180	75	75	73		1.001	5.658	690
945	151.947	153.038		0.16	0.16	1.31	1.04	0.25	84	83	72	1.50	1.98	79	0.014	98	99	21.7	0.00	0.64		121.5	181.2	176.9	59.4	180.9	177	75	75	72		1.001	5.338	649
946	152.107	153.198		0.16	0.16	1.30	1.03	0.25	84	83	72	1.50	1.98	78	0.011	111	110	21.7	0.05	0.70		121.2	180.8	176.6	59.4	180.6	175	75	75	72		1.001	5.822	706
947	152.268	153.358		0.16	0.16	1.30	1.04	0.25	84	83	72	1.50	1.96	78	0.014	99	98	21.8	-0.07	0.66		120.8	180.6	176.4	59.5	180.3	172	75	75	72		1.001	5.500	665
948	152.428	153.519		0.16	0.16	1.30	1.04	0.25	84	83	73	1.50	1.97	78	0.013	102	102	21.7	0.06	0.70		120.6	180.3	176.2	59.5	180.1	169	75	75	73		1.001	5.793	700
949	152.588	153.679		0.16	0.16	1.31	1.04	0.25	84	83	72	1.50	1.96	78	0.015	95	95	21.6	0.06	0.70		120.5	180.3	176.0	59.4	179.9	166	75	75	72		1.001	5.829	703
950	152.749	153.839		0.16	0.16	1.30	1.04	0.25	84	83	72	1.50	1.98	78	0.012	107	106	21.7	-0.05	0.70		120.2	180.0	175.7	59.4	179.7	164	75	75	72		1.001	5.832	702
951	152.909	154.000		0.16	0.16	1.30	1.04	0.25	84	83	72	1.50	1.98	78	0.015	95	95	21.7	0.02	0.66		120.0	179.7	175.6	59.5	179.5	161	75	75	72		1.001	5.500	661
952	153.069	154.161		0.16	0.16	1.30	1.04	0.25	84	83	72	1.50	1.96	78	0.013	102	102	21.7	-0.05	0.68		119.7	179.6	175.3	59.5	179.3	159	74	75	72		1.001	5.663	679
953	153.229	154.321		0.16	0.16	1.30	1.04	0.25	84	84	72	1.50	1.96	78	0.014	98	98	21.7	-0.03	0.68		119.4	179.1	175.0	59.5	178.9	157	74	75	72		1.001	5.665	677
954	153.388	154.482		0.16	0.16	1.43	1.04	0.25	84	84	72	1.50	2.11	78	0.014	98	98	21.7	0.05	0.70		119.0	178.8	174.7	59.5	178.6	155	74	74	72		1.001	5.828	694
955	153.548	154.643		0.16	0.16	1.31	1.04	0.25	84	83	72	1.50	1.98	78	0.014	98	99	21.7	-0.01	0.70		118.7	178.5	174.4	59.5	178.3	153	74	74	72		1.001	5.821	692
956	153.709	154.803		0.16	0.16	1.31	1.04	0.25	84	84	73	1.50	1.98	78	0.012	107	106	21.8	-0.08	0.72		118.5	178.3	174.2	59.5	178.0	151	74	74	73		1.001	5.990	711
957	153.870	154.963		0.16	0.16	1.31	1.04	0.25	84	83	72	1.50	1.99	78	0.014	99	98	21.6	0.14	0.68		118.3	178.1	174.0	59.6	177.8	149	74	74	72		1.001	5.662	670
958	154.031	155.124		0.16	0.16	1.32	1.04	0.25	84	84	72	1.50	1.99	78	0.011	111	111	21.6	-0.14	0.68		118.0	177.9	173.8	59.6	177.6	147	74	74	72		1.001	5.662	669
959	154.192	155.285		0.16	0.16	1.31	1.04	0.25	84	84	72	1.50	1.97	78	0.012	107	106	21.7	0.06	0.66		117.7	177.5	173.5	59.6	177.3	145	74	74	72		1.001	5.506	649
960	154.353	155.445		0.16	0.16	1.32	1.04	0.25	84	84	72	1.50	1.99	78	0.014	99	98	21.8	-0.09	0.70		117.4	177.2	173.2	59.6	177.0	143	74	74	72		1.001	5.828	685
961	154.514	155.606		0.16	0.16	1.31	1.04	0.25	84	83	72	1.50	1.98	78	0.013	103	102	21.8	0.06	0.64		117.1	177.0	173.1	59.6	176.7	142	74	74	72		1.001	5.341	626
962	154.675	155.767		0.16	0.16	1.31	1.04	0.25	84	84	72	1.50	1.98	78	0.015	95	95	21.8	-0.01	0.60		117.1	176.8	173.2	59.5	176.6	140	74	74	72		1.001	5.020	588
963	154.997	156.087		0.32	0.32	1.31	1.04	0.25	84	84	72	1.50	1.97	78	0.014	198	195	21.8	0.00	0.62		116.8	176.5	173.0	59.5	176.3	138	74	74	72		1.001	5.181	606
964	155.159	156.249		0.16	0.16	1.32	1.04	0.25	84	84	72	1.50	1.98	77	0.014	99	99	21.6	0.01	0.60		116.6	176.4	172.9	59.5	176.1	137	74	74	72		1.001	5.013	585
965	155.320	156.408		0.16	0.16	1.32	1.04	0.25	84	84	72	1.50	1.99	78	0.014	99	97	21.7	0.09	0.68		116.4	176.2	172.7	59.5	175.9	135	74	74	72		1.001	5.664	660
966	155.481	156.569		0.16	0.16	1.32	1.04	0.25	84	84	72	1.50	1.99	78	0.013	103	102	21.7	0.01	0.64		116.2	175.9	172.3	59.5	175.7	134	74	74	72		1.001	5.334	621
967	155.641	156.730		0.16	0.16	1.31	1.03	0.25	84	83	72	1.60	2.00	86	0.013	103	103	21.7	-0.02	0.62		115.9	175.5	171.8	59.5	175.3	169	74	74	72		1.001	5.177	601
968	155.802	156.890		0.16	0.16	1.32	1.05	0.25	84	84	72	1.50	1.98	82	0.014	99	98	21.5	0.21	0.62		115.6	175.2	171.5	59.4	175.0	172	74	74	72		1.001	5.180	599
969	155.964	157.051		0.16	0.16	1.32	1.05	0.25	84	84	72	1.50	1.97	79	0.011	112	111	21.5	-0.01	0.66		115.3	174.9	171.3	59.4	174.7	159	74	74	72		1.001	5.500	635
970	156.125	157.212		0.16	0.16	1.32	1.05	0.25	84	83	72	1.50	1.98	78	0.011	111	111	21.4	0.04	0.62		115.2	174.8	171.1	59.3	174.5	150	74	74	72		1.001	5.180	597
971	156.286	157.374		0.16	0.16	1.32	1.05	0.25	84	84	72	1.50	1.97	78	0.012	107	107	21.4	0.00	0.64		114.9	174.4	170.8	59.3	174.2	145	74	74	72		1.001	5.340	615
972	156.448	157.535		0.16	0.16	1.32	1.05	0.25	84	84	72	1.50	1.98	78	0.016	93	92	21.5	-0.01	0.60		114.7	174.2	170.6	59.3	174.0	141	74	74	72		1.001	5.013	576
973	156.609	157.696		0.16	0.16	1.32	1.05	0.25	84	84	73	1.50	1.97	78	0.013	103	102	21.3	0.11	0.64		114.5	173.9	170.4	59.3	173.8	138	74	74	73		1.001	5.337	612
974	156.770	157.858		0.16	0.16	1.32	1.05	0.25	84	84	72	1.50	1.97	77	0.014	99	99	21.4	-0.02	0.63		114.2	173.8	170.2	59.3	173.5	135	74	74	72		1.001	5.242	599
975	156.931	158.019		0.16	0.16	1.32	1.05	0.25	84	84	72	1.50	1.97	78	0.014	99	98	21.4	-0.03	0.66		113.9	173.4	169.9	59.4	173.3	134	74	74	72		1.001	5.496	627
976	157.093	158.180		0.16	0.16	1.32	1.05	0.25	84	84	72	1.50	1.97	78	0.015	96	95	21.4	-0.01	0.64		113.5	173.1	169.5	59.4	172.9	132	74	74	72		1.001	5.333	606
977	157.254	158.341		0.16	0.16	1.32	1.05	0.25	84	84	72	1.50	1.97	77	0.015	95	95	21.4	-0.02	0.64		113.3	172.9	169.4	59.4	172.7	130	74	74	72		1.001	5.338	605
978	157.415	158.503		0.16	0.16	1.32	1.05	0.25	84	84	72	1.50	1.97	77	0.011	111	112	21.4	-0.02	0.64		113.1	172.7	169.2	59.4	172.5	129	74	74	72		1.001	5.335	604
979	157.577	158.664		0.16	0.16	1.32	1.05	0.25	84	84	72	1.50	1.98	77	0.014	99	98	21.4	0.08	0.60		112.8	172.5	169.0	59.5	172.3	128	74	74	72		1.001	5.015	566
980	157.738	158.825		0.16	0.16	1.32	1.05	0.25	84	84	72	1.50	1.97	77	0.013	102	102	21.3	0.07	0.64		112.6	172.3	168.7	59.5	172.0	126	74	74	72		1.001	5.337	602
981	157.899	158.987		0.16	0.16	1.32	1.05	0.25	84	84	72	1.50	1.97	77	0.014	99	99	21.4	-0.11	0.64		112.3	171.9	168.4	59.4	171.8	125	73	73	72		1.001	5.340	601
982	158.061	159.148		0.16	0.16	1.32	1.05	0.25	84	84	72	1.50	1.98	78	0.015	96	95	21.4	0.02	0.64		112.1	171.7	168.1	59.3	171.4	124	73	73	72		1.001	5.344	600

Elapsed Time	Particulate Sampling Data																	Fuel Weight, lb		Flow, gpm		Temperature Data, oF									Stack			
	Gas Meter Cubic Feet (1)	Gas Meter Cubic Feet (2)	Gas Meter Cubic Feet (amb)	Sample Rate, cfm (1)	Sample Rate, cfm (2)	Orifice dH (1)	Orifice dH (2)	Orifice dH (amb)	Meter oF (1)	Meter oF (2)	Meter oF (amb)	Meter Vac. in. Hg. (1)	Meter Vac. in. Hg. (2)	Dilution Tunnel Temp.	Dilution Tunnel dP	Pro. Rate (%) (1)	Pro. Rate (%) (2)	Scale Reading	Weight Change	Load Side Liquid Flow Rate	Boiler Side Liquid Flow Rate (optional)	Thermopile ΔT	Boiler to Heat Exch. Temp.	Heat Exch to Boiler Temp.	Inlet Load Temp.	Outlet Load Temp.	Stack	Filter (1)	Filter (2)	Ambient		Specific Heat of Inlet Water (BTU/lb-°F)	Mass Flow Rate of Inlet Water (lb/min)	Heat Output, Btu
983	158.222	159.309		0.16	0.16	1.32	1.05	0.25	84	84	72	1.50	1.98	78	0.013	103	102	21.5	-0.16	0.62		111.9	171.3	167.8	59.3	171.1	122	73	73	72		1.001	5.190	581
984	158.383	159.471		0.16	0.16	1.32	1.04	0.25	84	84	72	1.50	1.98	78	0.013	103	103	21.4	0.12	0.62		111.6	171.0	167.6	59.2	170.8	121	73	73	72		1.001	5.183	579
985	158.545	159.633		0.16	0.16	1.32	1.04	0.25	84	84	71	1.50	1.97	78	0.014	99	99	21.4	-0.02	0.66		111.5	170.8	167.3	59.2	170.7	120	73	73	71		1.001	5.482	612
986	158.706	159.794		0.16	0.16	1.32	1.05	0.25	84	84	71	1.50	1.97	78	0.013	103	102	21.5	-0.07	0.64		111.1	170.5	167.0	59.2	170.3	119	73	73	71		1.001	5.371	597
987	158.868	159.955		0.16	0.16	1.33	1.05	0.25	84	84	71	1.50	1.98	78	0.014	99	98	21.5	0.05	0.62		110.8	170.2	166.7	59.3	170.0	118	73	73	71		1.001	5.186	575
988	159.029	160.116		0.16	0.16	1.33	1.05	0.25	84	84	71	1.50	1.97	78	0.013	103	102	21.3	0.14	0.64		110.5	169.9	166.5	59.3	169.8	118	73	73	71		1.001	5.365	593
989	159.190	160.279		0.16	0.16	1.32	1.05	0.25	84	84	71	1.50	1.98	78	0.012	107	108	21.4	-0.09	0.64		110.1	169.7	166.2	59.3	169.5	116	73	73	71		1.001	5.348	590
990	159.352	160.439		0.16	0.16	1.33	1.05	0.25	84	84	71	1.50	1.99	78	0.013	103	101	21.4	-0.04	0.62		110.0	169.5	166.1	59.3	169.3	116	73	73	71		1.001	5.189	571
991	159.513	160.600		0.16	0.16	1.32	1.05	0.25	84	84	71	1.50	1.98	78	0.014	99	98	21.4	0.00	0.64		109.7	169.2	165.8	59.3	169.0	115	73	73	71		1.001	5.348	587
992	159.675	160.762		0.16	0.16	1.32	1.05	0.25	84	84	72	1.50	1.96	78	0.014	99	99	21.3	0.14	0.64		109.3	168.9	165.5	59.3	168.7	114	73	73	72		1.001	5.348	585
993	159.836	160.924		0.16	0.16	1.32	1.05	0.25	84	84	72	1.50	1.97	78	0.013	103	103	21.5	-0.22	0.60		109.0	168.6	165.3	59.4	168.4	113	73	73	72		1.001	5.022	548
994	159.997	161.085		0.16	0.16	1.33	1.05	0.25	84	84	72	1.50	1.97	77	0.014	99	98	21.4	0.14	0.64		108.8	168.4	164.9	59.4	168.2	112	73	73	72		1.001	5.346	582
995	160.159	161.246		0.16	0.16	1.32	1.05	0.25	84	84	72	1.50	1.98	77	0.014	99	98	21.5	-0.11	0.64		108.5	168.1	164.7	59.5	168.0	111	73	73	72		1.001	5.345	581
996	160.320	161.408		0.16	0.16	1.32	1.05	0.25	84	83	72	1.50	1.97	77	0.013	102	103	21.4	0.06	0.64		108.1	167.8	164.4	59.5	167.6	111	73	73	72		1.001	5.342	578
997	160.482	161.570		0.16	0.16	1.33	1.05	0.25	84	84	72	1.50	1.98	77	0.013	103	103	21.4	0.00	0.64		107.8	167.5	164.1	59.6	167.4	110	73	73	72		1.001	5.338	576
998	160.643	161.731		0.16	0.16	1.32	1.04	0.25	83	83	72	1.50	1.99	80	0.013	103	102	21.4	-0.02	0.64		107.5	167.4	163.9	59.6	167.1	138	73	73	72		1.001	5.344	575
999	160.804	161.891		0.16	0.16	1.32	1.04	0.25	83	83	72	1.50	1.99	82	0.014	99	98	21.4	0.02	0.66		107.1	166.9	163.5	59.7	166.8	147	73	73	72		1.001	5.506	590
1000	160.966	162.054		0.16	0.16	1.33	1.05	0.25	83	83	72	1.50	1.97	78	0.014	100	100	21.3	0.07	0.61		106.7	166.6	163.3	59.8	166.5	137	73	73	72		1.001	5.098	545
1001	161.127	162.214		0.16	0.16	1.32	1.05	0.25	83	83	72	1.50	1.98	77	0.013	103	101	21.4	-0.06	0.64		106.4	166.3	163.0	59.8	166.2	128	73	73	72		1.001	5.340	569
1002	161.289	162.375		0.16	0.16	1.32	1.05	0.25	83	83	72	1.50	1.98	77	0.013	103	102	21.5	-0.06	0.64		106.1	166.1	162.8	59.8	165.9	122	73	73	72		1.001	5.339	567
1003	161.450	162.537		0.16	0.16	1.33	1.05	0.25	84	83	72	1.50	1.97	77	0.014	99	99	21.3	0.14	0.64		105.8	165.9	162.5	59.9	165.7	118	73	73	72		1.001	5.342	566
1004	161.611	162.699		0.16	0.16	1.33	1.05	0.25	84	83	72	1.50	1.97	77	0.014	99	99	21.4	-0.02	0.62		105.5	165.6	162.3	59.9	165.5	116	73	73	72		1.001	5.178	547
1005	161.773	162.860		0.16	0.16	1.33	1.05	0.25	83	83	72	1.50	1.97	77	0.014	100	98	21.4	-0.05	0.68		105.3	165.4	162.1	59.9	165.2	113	73	73	72		1.001	5.663	597
1006	161.934	163.021		0.16	0.16	1.33	1.05	0.25	83	83	72	1.50	1.97	77	0.014	99	98	21.3	0.12	0.66		105.0	165.1	161.8	59.9	164.9	112	73	73	72		1.001	5.505	579
1007	162.096	163.183		0.16	0.16	1.33	1.05	0.25	83	83	72	1.50	1.97	77	0.015	96	96	21.3	-0.01	0.66		104.8	164.9	161.5	59.9	164.7	111	73	73	72		1.001	5.499	577
1008	162.257	163.345		0.16	0.16	1.32	1.05	0.25	83	83	72	1.50	1.97	77	0.012	107	107	21.3	-0.03	0.60		104.6	164.6	161.3	59.8	164.4	110	73	73	72		1.001	5.011	525
1009	162.419	163.506		0.16	0.16	1.32	1.05	0.25	83	83	72	1.50	1.97	76	0.013	103	102	21.3	0.07	0.66		104.2	164.2	160.3	59.7	164.0	109	73	73	72		1.001	5.504	574
1010	162.580	163.667		0.16	0.16	1.32	1.05	0.25	83	83	72	1.50	1.97	76	0.011	111	111	21.3	-0.08	0.70		104.0	163.8	160.0	59.6	163.6	108	73	73	72		1.001	5.824	607
1011	162.741	163.829		0.16	0.16	1.32	1.05	0.25	83	83	72	1.50	1.98	77	0.015	96	96	21.4	-0.10	0.66		103.9	163.5	159.8	59.4	163.3	107	73	73	72		1.001	5.503	572
1012	162.903	163.990		0.16	0.16	1.32	1.05	0.25	83	83	72	1.50	1.98	77	0.014	100	98	21.3	0.10	0.68		103.7	163.2	159.4	59.3	163.0	106	73	73	72		1.001	5.664	588
1013	163.064	164.152		0.16	0.16	1.32	1.05	0.25	83	83	72	1.50	1.98	76	0.016	92	93	21.4	-0.11	0.70		103.5	162.9	159.1	59.2	162.7	105	73	73	72		1.001	5.847	606
1014	163.226	164.313		0.16	0.16	1.32	1.05	0.25	83	83	72	1.50	1.98	76	0.014	99	98	21.3	0.15	0.72		103.3	162.7	158.9	59.1	162.5	104	73	73	72		1.001	5.991	620
1015	163.387	164.475		0.16	0.16	1.32	1.05	0.25	83	83	72	1.50	1.98	76	0.015	95	96	21.4	-0.09	0.66		103.0	162.3	158.6	59.1	162.1	104	73	73	72		1.001	5.506	568
1016	163.548	164.636		0.16	0.16	1.32	1.05	0.25	83	83	72	1.50	1.96	77	0.013	103	102	21.4	-0.06	0.66		102.7	161.9	158.2	59.0	161.8	103	73	73	72		1.001	5.504	566
1017	163.710	164.797		0.16	0.16	1.32	1.05	0.25	83	83	72	1.50	1.97	80	0.014	100	99	21.2	0.24	0.68		102.5	161.7	158.0	59.0	161.5	132	73	73	72		1.001	5.668	581
1018	163.871	164.958		0.16	0.16	1.32	1.05	0.25	83	83	72	1.50	1.98	82	0.014	99	99	21.3	-0.11	0.66		102.1	161.4	157.8	59.1	161.2	151	73	73	72		1.001	5.506	563
1019	164.032	165.120		0.16	0.16	1.32	1.05	0.25	83	83	72	1.50	1.97	83	0.014	99	100	21.2	0.13	0.66		101.8	161.1	157.5	59.1	160.9	163	73	73	72		1.001	5.506	561
1020	164.193	165.281		0.16	0.16	1.32	1.05	0.25	83	83	72	1.50	1.97	84	0.016	93	93	21.2	-0.04	0.68		101.5	160.9	157.3	59.2	160.6	171	73	73	72		1.001	5.672	576
1021	164.354	165.442		0.16	0.16	1.32	1.05	0.25	83	83	72	1.50	1.97	86	0.015	96	96	20.9	0.29	0.72		101.3	160.6	157.1	59.2	160.4	184	73	73	72		1.001	5.992	607
1022	164.515	165.604		0.16	0.16	1.32	1.05	0.25	83	83	71	1.50	1.98	88	0.014	100	100	20.9	0.04	0.68		101.1	160.4	156.9	59.2	160.2	194	73	73	71		1.001	5.668	573
1023	164.677	165.764		0.16	0.16	1.33	1.04	0.25	83	83	72	1.50	1.98	89	0.015	97	96	20.6	0.30	0.68		100.8	160.2	156.7	59.2	160.0	205	73	74	72		1.001	5.668	572
1024	164.838	165.925		0.16	0.16	1.32	1.05	0.25	83	83	72	1.50	1.98	90	0.013	104	103	20.5	0.12	0.66		100.8	160.3	156.7	59.2	160.0	213	74	74	72		1.001	5.509	556
1025	164.999	166.086		0.16	0.16	1.32	1.05	0.25	83	83	72	1.50	1.99	91	0.013	104	103	20.3	0.22	0.66		100.8	160.3	156.7	59.2	160.0	222	74	74	72		1.001	5.501	555
1026	165.160	166.247		0.16	0.16	1.32	1.05	0.25	83	83	72	1.50	1.99	93	0.015	97	96	19.9	0.39	0.68		100.9	160.3	156.8	59.2	160.1	230	74	74	72		1.001	5.683	574
1027	165.321	166.408		0.16	0.16	1.31	1.03	0.25	83	83	72	1.50	1.98	94	0.014	100	100	19.7	0.16	0.66		101.1	160.6	157.1	59.2	160.3	238	74	74	72		1.001	5.527	559
1028	165.482	166.568		0.16	0.16	1.31	1.04	0.25	83	83	72	1.60	1.99	94	0.013	104	103	19.4	0.34	0.73		101.4	161.0	157.4	59.3	160.7	245	74	74	72		1.001	6.120	621
1029	165.643	166.729		0.16	0.16	1.31	1.04	0.25	83	83	72	1.60	1.98	95	0.013	104	104	18.9	0.43	0.66		101.7	161.5	157.9	59.3	161.1	252	74	74	72		1.001	5.509	561
1030	165.804	166.888		0.16	0.16	1.31	1.04	0.25	83	83	72	1.60	1.98	96	0.012	109	107	18.7	0.22	0.64		102.2	162.1	158.5	59.3	161.6	258	75	75	72		1.001	5.341	547
1031	165.965	167.048		0.16	0.16	1.31	1.03	0.25	83	83	72	1.60	2.00	97	0.015	97	96	18.4	0.32	0.70		102.9	162.7	159.1	59.4	162.3	267	75	75	72		1.001	5.831	601
1032	166.125	167.209		0.16	0.16	1.31	1.03	0.25	83	83	71	1.60	2.00	98	0.011	113	113	18.2	0.18	0.72		103.6	163.4	159.7	59.4	163.0	275	75	75	71		1.001	5.990	621
1033	166.286	167.368		0.16	0.16	1.32	1.03	0.25	83	83	72	1.60	2.00	99	0.013	105	103	17.7	0.49	0.72		104.2	164.1	160.3	59.4	163.6	281	75	75	72		1.001	5.992	625
1034	166.446	167.527		0.16	0.16	1.32	1.03	0.25	83	83	71	1.60	2.01	100	0.014	100	99	17.4	0.33	0.64		105.2	165.1	161.3	59.4	164.6	288	75	75	71		1.001	5.341	563
1035	166.607	167.687		0.16	0.16	1.32	1.03	0.25	83	83	71	1.60	2.01	101	0.014	101	100	17.0	0.44	0.68		105.8	165.7	161.9	59.4	165.2	295	75	75	71		1.001	5.666	600
1036	166.768	167.845		0.16	0.16	1.31	1.02	0.25	83	83	72	1.60	2.00	102	0.013	105	103	16.8	0.16	0.68		106.7	166.6	162.8	59.3	166.1	301	76	76	72		1.001	5.667	606
1037	166.928	168.004		0.16	0.16	1.31	1.03	0.25	83	83	72	1.60	2.00	104	0.014	101	100	16.2	0.57	0.70		107.5	167.4	163.5	59.3	166.8	310	76	76	72		1.001	5.824	627
1038	167.088	168.162		0.16	0.16	1.32	1.01	0.25	83	83	72	1.60	2.01	106	0.012	109	107	15.7	0.48	0.70		108.7	168.5	164.7	59.3	168.0	326	76	76	72		1.001	5.835	635
1039	167.248	168.321		0.16	0.16	1.32	1.05	0.25	83	83	72	1.70	2.02	108	0.013	105	104	15.2	0.55	0.68		109.7	169.5	165.6	59.2	168.9	338	76	77	72		1.001	5.666	622
1040	167.408	168.482		0.16	0.16	1.32	1.05	0.25	83	83	72	1.70	2.02	109	0.012	109	109	14.7	0.48	0.67		111.0	170.7	166.8	59.1	170.2	345	77	77	72		1.001	5.582	621
1041	167.568	168.642		0.16	0.16	1.32	1.04	0.25	83	83	72	1.70	2.03	109	0.014	101	101	14.4	0.33	0.64		112.4	172.1	168.1	59.1	171.5	350	77	77	72		1.001	5.346	602
1042	167.728	168.801		0.16	0.16	1.32	1.04	0.25	83	83	71	1.70	2.02	110	0.012	109	108	13.8	0.62	0.66		113.8	173.6	169.5	59.0	172.8	354	77	77	71		1.001	5.509	628
1043	167.889	168.962		0.16	0.16	1.32	1.04	0.25	83	83	72	1.70	2.03	110	0.014	102	101	13.3	0.45	0.74		115.2	174.9	170.8	58.9	174.2	357	77	77	72		1.001	6.148	709
1044	168.049	169.121		0.16	0.16	1.32	1.03	0.25	83	83	71	1.70	2.01	111	0.014	101	100	12.9	0.46	0.66		116.4	176.0	171.8	58.9	175.3	360	77	77	71		1.001	5.503	641

Elapsed Time	Particulate Sampling Data																	Fuel Weight, lb		Flow, gpm		Temperature Data, oF									Stack			
	Gas Meter Cubic Feet (1)	Gas Meter Cubic Feet (2)	Gas Meter Cubic Feet (amb)	Sample Rate, cfm (1)	Sample Rate, cfm (2)	Orifice dH (1)	Orifice dH (2)	Orifice dH (amb)	Meter oF (1)	Meter oF (2)	Meter oF (amb)	Meter Vac. in. Hg. (1)	Meter Vac. in. Hg. (2)	Dilution Tunnel Temp.	Dilution Tunnel dP	Pro. Rate (%) (1)	Pro. Rate (%) (2)	Scale Reading	Weight Change	Load Side Liquid Flow Rate	Boiler Side Liquid Flow Rate (optional)	Thermopile ΔT	Boiler to Heat Exch. Temp.	Heat Exch to Boiler Temp.	Inlet Load Temp.	Outlet Load Temp.	Stack	Filter (1)	Filter (2)	Ambient		Specific Heat of Inlet Water (BTU/lb-°F)	Mass Flow Rate of Inlet Water (lb/min)	Heat Output, Btu
1045	168.209	169.280		0.16	0.16	1.31	1.03	0.25	83	83	72	1.70	2.03	111	0.013	105	104	12.3	0.55	0.68		117.6	177.1	172.9	58.9	176.5	362	77	77	72		1.001	5.661	667
1046	168.369	169.440		0.16	0.16	1.30	1.03	0.25	83	83	71	1.70	2.04	112	0.014	101	101	11.9	0.38	0.66		118.9	178.4	174.2	58.8	177.7	364	78	78	71		1.001	5.505	656
1047	168.529	169.598		0.16	0.16	1.30	1.02	0.25	83	83	71	1.70	2.02	112	0.015	98	96	11.3	0.58	0.64		120.2	179.8	175.5	58.7	178.9	365	78	78	71		1.001	5.339	642
1048	168.689	169.756		0.16	0.16	1.30	1.02	0.25	83	83	71	1.70	2.04	112	0.014	101	100	11.0	0.29	0.68		121.7	181.3	176.9	58.7	180.5	366	78	78	71		1.001	5.670	691
1049	168.848	169.915		0.16	0.16	1.30	1.01	0.25	83	83	72	1.80	2.03	112	0.013	105	104	10.7	0.31	0.68		122.9	182.3	178.0	58.8	181.6	367	78	78	72		1.001	5.664	697
1050	169.007	170.072		0.16	0.16	1.30	1.01	0.25	83	83	72	1.80	2.04	113	0.014	101	99	10.2	0.56	0.66		123.9	183.3	178.9	58.8	182.7	367	78	78	72		1.001	5.496	682
1051	169.167	170.232		0.16	0.16	1.30	1.02	0.25	83	83	72	1.70	2.02	95	0.013	104	103	9.7	0.42	0.70		125.1	184.8	180.3	58.9	184.0	337	78	78	72		1.001	5.825	729
1052	169.327	170.390		0.16	0.16	1.31	1.01	0.25	83	83	72	1.70	2.03	89	0.014	99	98	9.7	0.04	0.68		126.0	185.3	181.0	58.9	184.9	310	78	77	72		1.001	5.665	714
1053	169.487	170.548		0.16	0.16	1.30	1.01	0.25	83	83	72	1.70	2.02	86	0.013	103	101	9.5	0.15	0.67		126.2	185.6	181.1	59.0	185.2	294	77	77	72		1.001	5.606	709
1054	169.647	170.707		0.16	0.16	1.31	1.01	0.25	83	83	72	1.80	2.03	84	0.014	99	98	9.4	0.13	0.68		126.4	185.9	181.3	59.0	185.4	282	77	77	72		1.001	5.662	716
1055	169.807	170.864		0.16	0.16	1.30	1.01	0.25	83	83	72	1.80	2.02	83	0.016	92	90	9.2	0.24	0.66		126.6	186.1	182.0	59.0	185.6	271	77	77	72		1.001	5.503	697
1056	169.967	171.023		0.16	0.16	1.30	1.00	0.25	83	83	71	1.80	2.02	83	0.012	107	106	9.2	-0.05	0.56		126.9	186.4	182.4	59.1	186.0	261	77	76	71		1.001	4.687	596
1057	170.127	171.180		0.16	0.16	1.30	1.00	0.25	83	83	72	1.80	2.03	82	0.014	99	96	9.1	0.09	0.64		127.1	186.6	182.6	59.1	186.2	253	77	76	72		1.001	5.340	679
1058	170.287	171.337		0.16	0.16	1.30	1.00	0.25	83	83	71	1.80	2.03	81	0.013	102	100	9.0	0.18	0.64		127.1	186.6	182.6	59.2	186.2	246	76	76	71		1.001	5.340	679
1059	170.447	171.495		0.16	0.16	1.30	0.99	0.25	83	83	72	1.80	2.02	81	0.014	99	97	9.1	-0.16	0.64		127.0	186.7	182.7	59.2	186.3	240	76	76	72		1.001	5.337	679
1060	170.607	171.652		0.16	0.16	1.29	1.00	0.25	83	83	71	1.80	2.04	80	0.014	99	96	8.9	0.17	0.64		127.0	186.6	182.8	59.3	186.3	234	76	76	71		1.001	5.339	679
1061	170.767	171.810		0.16	0.16	1.29	1.00	0.25	83	83	71	1.80	2.02	80	0.015	95	94	9.0	-0.01	0.62		126.8	186.5	182.6	59.4	186.2	228	76	76	71		1.001	5.176	657
1062	170.926	171.967		0.16	0.16	1.29	1.00	0.25	83	83	71	1.80	2.04	80	0.014	98	96	8.8	0.13	0.64		126.6	186.4	182.5	59.4	186.1	223	76	76	71		1.001	5.342	677
1063	171.086	172.126		0.16	0.16	1.29	1.00	0.25	83	83	71	1.80	2.02	79	0.015	95	94	8.8	-0.01	0.60		126.5	186.2	182.4	59.5	186.0	221	75	75	71		1.001	5.019	636
1064	171.246	172.282		0.16	0.16	1.30	1.00	0.25	83	83	71	1.80	2.04	78	0.014	98	95	8.9	-0.03	0.62		126.5	186.3	182.5	59.5	186.0	218	75	75	71		1.001	5.179	656
1065	171.405	172.440		0.16	0.16	1.30	1.00	0.25	83	83	72	1.80	2.04	78	0.013	101	100	8.8	0.11	0.64		126.3	186.2	182.3	59.6	185.9	214	75	75	72		1.001	5.346	676
1066	171.565	172.598		0.16	0.16	1.30	1.00	0.25	83	83	72	1.80	2.04	78	0.014	98	97	8.8	-0.08	0.62		126.1	186.1	182.2	59.6	185.8	210	75	75	72		1.001	5.180	654
1067	171.725	172.755		0.16	0.16	1.30	1.00	0.25	83	83	71	1.80	2.04	77	0.014	98	96	8.8	0.02	0.62		126.0	185.9	182.1	59.7	185.6	206	75	75	71		1.001	5.183	654
1068	171.885	172.913		0.16	0.16	1.30	1.00	0.25	83	83	72	1.80	2.03	77	0.013	102	100	8.7	0.13	0.62		125.8	185.7	181.9	59.7	185.5	203	75	75	72		1.001	5.189	653
1069	172.045	173.070		0.16	0.16	1.30	1.00	0.25	83	83	72	1.80	2.02	77	0.015	95	93	8.7	-0.01	0.64		125.5	185.5	181.7	59.7	185.3	199	75	74	72		1.001	5.340	671
1070	172.205	173.229		0.16	0.16	1.30	1.00	0.25	83	83	72	1.80	2.02	77	0.014	98	97	8.7	-0.03	0.62		125.4	185.5	181.6	59.7	185.2	196	75	74	72		1.001	5.178	650
1071	172.365	173.386		0.16	0.16	1.30	1.00	0.25	83	83	72	1.80	2.02	77	0.015	95	93	8.7	0.07	0.64		125.4	185.2	181.4	59.6	185.0	192	74	74	72		1.001	5.337	670
1072	172.525	173.543		0.16	0.16	1.30	1.00	0.25	83	83	71	1.80	2.03	77	0.014	98	96	8.6	0.09	0.62		125.3	185.1	181.2	59.5	184.8	188	74	74	71		1.001	5.182	650
1073	172.685	173.701		0.16	0.16	1.30	1.00	0.25	83	83	71	1.80	2.03	77	0.014	98	97	8.7	-0.16	0.60		125.3	185.0	181.2	59.4	184.7	185	74	74	71		1.001	5.014	629
1074	172.844	173.858		0.16	0.16	1.29	1.00	0.25	83	83	71	1.80	2.04	77	0.013	101	100	8.7	0.04	0.60		125.2	184.9	181.1	59.3	184.6	181	74	74	71		1.001	5.015	629
1075	173.004	174.016		0.16	0.16	1.29	1.00	0.25	83	83	71	1.80	2.04	77	0.016	92	90	8.8	-0.11	0.62		125.1	184.6	181.0	59.2	184.4	179	74	74	71		1.001	5.182	649
1076	173.163	174.173		0.16	0.16	1.29	1.00	0.25	83	83	71	1.80	2.04	77	0.014	98	96	8.7	0.07	0.62		125.0	184.4	180.5	59.1	184.1	176	74	74	71		1.001	5.179	648
1077	173.323	174.331		0.16	0.16	1.29	1.00	0.25	83	83	71	1.80	2.03	77	0.014	98	97	8.6	0.13	0.64		124.9	184.1	180.3	59.0	183.9	173	74	74	71		1.001	5.348	668
1078	173.483	174.488		0.16	0.16	1.30	1.00	0.25	83	83	71	1.80	2.02	77	0.015	95	93	8.8	-0.18	0.58		124.7	184.0	180.5	59.0	183.7	170	74	74	71		1.001	4.855	606
1079	173.642	174.646		0.16	0.16	1.30	1.00	0.25	83	83	71	1.80	2.04	77	0.016	91	90	8.7	0.12	0.60		124.8	183.9	180.0	58.9	183.7	168	74	73	71		1.001	5.020	627
1080	173.803	174.803		0.16	0.16	1.30	1.00	0.25	83	83	71	1.80	2.03	77	0.013	103	100	8.6	0.04	0.55		124.6	183.6	179.9	58.9	183.5	165	74	73	71		1.001	4.549	567
1081	173.962	174.961		0.16	0.16	1.30	1.00	0.25	83	83	71	1.80	2.02	77	0.015	94	93	8.6	0.03	0.58		124.4	183.5	179.9	58.9	183.2	162	73	73	71		1.001	4.826	601
1082	174.122	175.119		0.16	0.16	1.30	1.00	0.25	83	83	71	1.80	2.03	77	0.015	95	93	8.7	-0.09	0.60		124.1	183.2	179.4	58.9	183.0	160	73	73	71		1.001	5.021	624
1083	174.282	175.276		0.16	0.16	1.30	1.00	0.25	83	83	71	1.80	2.02	76	0.015	95	93	8.7	0.01	0.60		123.7	182.8	179.0	58.9	182.6	158	73	73	71		1.001	5.015	621
1084	174.443	175.434		0.16	0.16	1.30	1.00	0.25	83	83	72	1.80	2.04	76	0.013	103	100	8.8	-0.10	0.68		123.5	182.7	179.1	59.0	182.4	156	73	73	72		1.001	5.662	700
1085	174.603	175.591		0.16	0.16	1.30	1.00	0.25	83	83	71	1.80	2.02	76	0.013	102	99	8.7	0.09	0.62		123.3	182.5	178.7	59.0	182.3	154	73	73	71		1.001	5.183	640
1086	174.762	175.749		0.16	0.16	1.30	1.00	0.25	83	83	71	1.80	2.02	76	0.014	98	96	8.7	0.01	0.60		123.1	182.3	178.5	59.1	182.1	152	73	73	71		1.001	5.019	618
1087	174.922	175.906		0.16	0.16	1.29	1.00	0.25	83	83	71	1.80	2.03	76	0.014	98	96	8.7	-0.04	0.62		122.7	182.0	178.2	59.1	181.8	149	73	73	71		1.001	5.181	636
1088	175.082	176.064		0.16	0.16	1.29	1.00	0.25	83	83	71	1.80	2.03	76	0.014	98	96	8.8	-0.04	0.62		122.5	181.9	178.1	59.2	181.6	148	73	73	71		1.001	5.187	636
1089	175.242	176.222		0.16	0.16	1.29	1.00	0.25	83	83	71	1.80	2.02	76	0.016	92	90	8.6	0.11	0.58		122.1	181.6	177.9	59.3	181.4	146	73	73	71		1.001	4.859	594
1090	175.401	176.379		0.16	0.16	1.30	1.00	0.25	83	83	71	1.80	2.04	76	0.012	105	104	8.8	-0.16	0.62		122.0	181.6	177.9	59.3	181.3	144	73	73	71		1.001	5.186	633
1091	175.561	176.537		0.16	0.16	1.30	1.00	0.25	83	83	71	1.80	2.04	77	0.014	98	97	8.7	0.13	0.66		121.7	181.3	177.5	59.4	181.0	142	73	73	71		1.001	5.475	667
1092	175.721	176.694		0.16	0.16	1.30	1.00	0.25	83	83	71	1.80	2.04	76	0.016	92	90	8.8	-0.08	0.64		121.3	180.9	177.2	59.4	180.7	140	73	73	71		1.001	5.343	649
1093	175.880	176.851		0.16	0.16	1.29	0.96	0.25	83	83	72	1.90	2.05	85	0.013	102	100	8.7	0.10	0.62		121.1	180.7	176.9	59.4	180.5	166	74	74	72		1.001	5.191	629
1094	176.040	177.006		0.16	0.16	1.31	1.01	0.25	83	83	71	1.70	2.00	84	0.013	103	99	8.5	0.17	0.64		120.7	180.3	176.6	59.4	180.1	187	73	73	71		1.001	5.320	643
1095	176.201	177.165		0.16	0.16	1.31	1.02	0.25	83	83	72	1.70	1.99	78	0.014	99	97	8.4	0.05	0.60		120.4	180.1	176.4	59.4	179.8	171	73	73	72		1.001	5.020	605
1096	176.361	177.325		0.16	0.16	1.32	1.02	0.25	83	83	71	1.70	2.00	78	0.015	95	95	8.4	0.03	0.64		120.3	180.0	176.2	59.4	179.7	160	73	73	71		1.001	5.343	644
1097	176.522	177.484		0.16	0.16	1.31	1.02	0.25	83	83	71	1.70	2.01	77	0.013	103	101	8.5	-0.10	0.60		120.2	179.8	176.0	59.4	179.5	153	73	73	71		1.001	5.014	603
1098	176.683	177.643		0.16	0.16	1.31	1.02	0.25	83	83	72	1.70	2.00	77	0.014	99	97	8.3	0.18	0.62		119.9	179.6	175.8	59.4	179.3	148	73	73	72		1.001	5.178	622
1099	176.844	177.803		0.16	0.16	1.31	1.02	0.25	83	83	72	1.70	2.00	77	0.014	99	98	8.5	-0.16	0.64		119.8	179.3	175.6	59.3	179.1	144	73	73	72		1.001	5.340	641
1100	177.004	177.961		0.16	0.16	1.31	1.03	0.25	83	83	71	1.70	2.00	77	0.011	111	109	8.5	-0.04	0.62		119.6	179.1	175.4	59.2	178.9	141	73	73	71		1.001	5.179	620
1101	177.165	178.122		0.16	0.16	1.31	1.02	0.25	83	83	72	1.70	1.99	77	0.013	103	102	8.6	-0.06	0.62		119.3	178.7	175.0	59.2	178.5	139	73	73	72		1.001	5.180	619
1102	177.325	178.281		0.16	0.16	1.31	1.02	0.25	83	83	72	1.70	1.99	77	0.015	95	94	8.4	0.13	0.62		119.1	178.5	174.8	59.1	178.3	137	73	73	72		1.001	5.184	618
1103	177.486	178.440		0.16	0.16	1.31	1.02	0.25	83	83	72	1.70	1.99	77	0.013	103	101	8.5	-0.06	0.60		118.9	178.3	174.5	59.1	178.0	135	73	73	72		1.001	5.020	598
1104	177.647	178.600		0.16	0.16	1.30	1.02	0.25	83	83	72	1.70	2.00	76	0.014	99	98	8.5	-0.03	0.62		118.7	178.0	174.3	59.1	177.8	134	73	73	72		1.001	5.179	615
1105	177.807	178.759		0.16	0.16	1.30	1.02	0.25	83	83	72	1.70	2.00	77	0.014	98	97	8.6	-0.04	0.63		118.4	177.7	174.0	59.1	177.5	132	73	73	72		1.001	5.216	618
1106	177.968	178.918		0.16	0.16	1.30	1.03	0.25	83	83	72	1.70	1.99	76	0.014	99	97	8.5	0.06	0.64		118.1	177.4	173.8	59.1	177.2	130	73	73	72		1.001	5.343	632

Elapsed Time	Particulate Sampling Data																	Fuel Weight, lb		Flow, gpm		Temperature Data, oF									Stack			
	Gas Meter Cubic Feet (1)	Gas Meter Cubic Feet (2)	Gas Meter Cubic Feet (amb)	Sample Rate, cfm (1)	Sample Rate, cfm (2)	Orifice dH (1)	Orifice dH (2)	Orifice dH (amb)	Meter oF (1)	Meter oF (2)	Meter oF (amb)	Meter Vac. in. Hg. (1)	Meter Vac. in. Hg. (2)	Dilution Tunnel Temp.	Dilution Tunnel dP	Pro. Rate (%) (1)	Pro. Rate (%) (2)	Scale Reading	Weight Change	Load Side Liquid Flow Rate	Boiler Side Liquid Flow Rate (optional)	Thermopile ΔT	Boiler to Heat Exch. Temp.	Heat Exch to Boiler Temp.	Inlet Load Temp.	Outlet Load Temp.	Stack	Filter (1)	Filter (2)	Ambient		Specific Heat of Inlet Water (BTU/lb-°F)	Mass Flow Rate of Inlet Water (lb/min)	Heat Output, Btu
1107	178.125	179.078		0.16	0.16	1.30	1.03	0.25	83	83	72	1.70	1.99	77	0.015	95	94	8.3	0.17	0.66		117.8	177.1	173.5	59.1	176.9	129	73	73	72		1.001	5.499	649
1108	178.288	179.237		0.16	0.16	1.30	1.02	0.25	83	83	72	1.70	1.99	77	0.013	102	101	8.4	-0.06	0.56		117.5	176.9	173.4	59.1	176.6	128	73	73	72		1.001	4.699	553
1109	178.449	179.397		0.16	0.16	1.31	1.02	0.25	83	83	72	1.70	1.99	77	0.015	96	94	8.6	-0.18	0.66		117.3	176.7	173.1	59.2	176.5	127	73	73	72		1.001	5.508	647
1110	178.610	179.560		0.16	0.16	1.32	1.07	0.25	83	83	72	1.80	2.00	77	0.015	96	96	8.4	0.15	0.66		116.9	176.4	172.7	59.3	176.2	125	73	73	72		1.001	5.503	644
1111	178.771	179.722		0.16	0.16	1.32	1.07	0.25	83	83	72	1.80	2.01	77	0.011	112	112	8.6	-0.16	0.64		116.5	176.1	172.4	59.3	175.9	124	73	73	72		1.001	5.341	623
1112	178.933	179.885		0.16	0.16	1.32	1.07	0.25	83	83	72	1.80	2.02	76	0.015	96	96	8.4	0.17	0.66		116.2	175.8	172.2	59.4	175.6	123	73	73	72		1.001	5.508	641
1113	179.094	180.048		0.16	0.16	1.32	1.07	0.25	83	83	72	1.80	2.01	76	0.011	111	112	8.5	-0.07	0.62		115.9	175.7	172.0	59.5	175.4	122	73	73	72		1.001	5.180	601
1114	179.256	180.211		0.16	0.16	1.32	1.07	0.25	83	83	72	1.80	2.00	77	0.012	107	108	8.4	0.06	0.62		115.6	175.4	171.8	59.6	175.2	121	73	73	72		1.001	5.181	600
1115	179.417	180.375		0.16	0.16	1.32	1.07	0.25	83	83	72	1.80	2.00	77	0.016	93	94	8.6	-0.12	0.62		115.2	175.1	171.5	59.6	174.9	119	72	73	72		1.001	5.179	598
1116	179.579	180.538		0.16	0.16	1.32	1.07	0.25	83	83	72	1.80	2.02	77	0.014	100	100	8.5	0.06	0.60		114.9	174.9	171.3	59.7	174.6	119	73	73	72		1.001	5.019	577
1117	179.740	180.701		0.16	0.16	1.32	1.07	0.25	83	83	72	1.80	2.01	77	0.016	93	93	8.4	0.06	0.60		114.5	174.5	170.9	59.8	174.3	118	73	73	72		1.001	5.006	574
1118	179.901	180.864		0.16	0.16	1.32	1.07	0.25	83	83	72	1.80	2.01	77	0.013	103	103	8.4	-0.01	0.62		114.2	174.2	170.6	59.8	174.0	116	73	73	72		1.001	5.163	593
1119	180.063	181.027		0.16	0.16	1.32	1.07	0.25	83	83	72	1.80	2.01	77	0.014	100	100	8.6	-0.13	0.62		114.0	174.0	170.4	59.8	173.7	115	73	73	72		1.001	5.179	591
1120	180.224	181.191		0.16	0.16	1.32	1.07	0.25	83	83	72	1.80	2.00	77	0.014	99	100	8.6	-0.03	0.62		113.7	173.7	170.2	59.8	173.5	115	72	73	72		1.001	5.180	590
1121	180.385	181.354		0.16	0.16	1.32	1.07	0.25	83	83	72	1.80	2.01	77	0.015	96	96	8.6	0.04	0.62		113.5	173.4	169.9	59.7	173.2	114	73	73	72		1.001	5.177	588
1122	180.547	181.517		0.16	0.16	1.32	1.07	0.25	83	83	72	1.80	2.02	77	0.014	100	100	8.5	0.06	0.66		113.3	173.2	169.6	59.7	173.0	113	73	73	72		1.001	5.504	624
1123	180.708	181.680		0.16	0.16	1.32	1.07	0.25	83	83	72	1.80	2.02	77	0.015	96	96	8.5	0.02	0.64		113.1	172.9	169.4	59.6	172.7	112	73	73	72		1.001	5.340	604
1124	180.869	181.843		0.16	0.16	1.32	1.07	0.25	83	83	72	1.80	2.01	77	0.014	99	100	8.5	-0.03	0.62		112.9	172.6	169.1	59.6	172.4	112	73	73	72		1.001	5.180	585
1125	181.030	182.006		0.16	0.16	1.32	1.05	0.25	83	83	72	1.80	2.01	83	0.014	99	100	8.6	-0.07	0.62		112.5	172.3	168.8	59.5	172.0	154	73	73	72		1.001	5.182	584
1126	181.192	182.168		0.16	0.16	1.32	1.07	0.25	83	83	72	1.80	2.02	80	0.012	108	107	8.5	0.13	0.66		112.3	172.0	168.4	59.4	171.7	155	73	73	72		1.001	5.507	619
1127	181.353	182.330		0.16	0.16	1.32	1.07	0.25	83	83	72	1.80	2.00	78	0.015	96	96	8.4	0.02	0.64		112.2	171.8	168.3	59.4	171.6	141	73	73	72		1.001	5.344	600
1128	181.514	182.493		0.16	0.16	1.33	1.07	0.25	83	83	71	1.80	2.02	77	0.014	99	100	8.4	0.09	0.62		112.1	171.7	168.2	59.4	171.5	132	73	73	71		1.001	5.180	581
1129	181.676	182.656		0.16	0.16	1.32	1.07	0.25	83	83	72	1.80	2.02	77	0.013	103	103	8.3	0.03	0.64		111.8	171.3	167.9	59.4	171.2	127	73	73	72		1.001	5.345	598
1130	181.837	182.821		0.16	0.16	1.32	1.07	0.25	83	83	72	1.80	2.00	77	0.014	99	101	8.4	-0.06	0.62		111.4	171.1	167.6	59.4	170.8	123	73	73	72		1.001	5.179	578
1131	181.998	182.983		0.16	0.16	1.32	1.07	0.25	83	83	72	1.80	2.01	77	0.013	103	103	8.3	0.05	0.64		111.1	170.8	167.3	59.5	170.6	120	73	73	72		1.001	5.293	589
1132	182.160	183.146		0.16	0.16	1.32	1.07	0.25	83	83	72	1.80	2.02	77	0.012	107	108	8.5	-0.17	0.62		110.8	170.4	167.0	59.5	170.3	118	73	73	72		1.001	5.205	577
1133	182.321	183.309		0.16	0.16	1.32	1.07	0.25	83	83	72	1.80	2.01	77	0.013	103	103	8.4	0.16	0.62		110.4	170.2	166.8	59.6	170.0	117	73	73	72		1.001	5.167	571
1134	182.482	183.472		0.16	0.16	1.32	1.07	0.25	83	83	72	1.80	2.00	77	0.011	112	112	8.4	-0.05	0.58		110.1	169.9	166.5	59.6	169.7	115	73	73	72		1.001	4.858	536
1135	182.644	183.637		0.16	0.16	1.32	1.07	0.25	83	83	72	1.80	2.01	77	0.015	96	97	8.5	-0.06	0.60		109.9	169.7	166.3	59.6	169.5	114	73	73	72		1.001	5.018	552
1136	182.805	183.799		0.16	0.16	1.32	1.07	0.25	83	83	72	1.80	2.01	77	0.014	99	99	8.4	0.08	0.66		109.6	169.5	166.0	59.6	169.2	113	73	73	72		1.001	5.509	604
1137	182.966	183.962		0.16	0.16	1.32	1.07	0.25	83	83	72	1.80	2.00	77	0.013	103	103	8.4	0.03	0.60		109.4	169.2	165.8	59.6	169.0	112	73	73	72		1.001	5.016	549
1138	183.125	184.125		0.16	0.16	1.32	1.07	0.25	83	83	72	1.80	2.01	77	0.013	103	103	8.4	-0.04	0.64		109.1	168.9	165.7	59.7	168.7	111	73	73	72		1.001	5.341	583
1139	183.289	184.289		0.16	0.16	1.32	1.07	0.25	83	83	72	1.80	1.99	77	0.014	99	100	8.4	-0.04	0.66		108.7	168.6	165.3	59.8	168.5	110	73	73	72		1.001	5.504	599
1140	183.451	184.452		0.16	0.16	1.32	1.07	0.25	83	83	72	1.80	2.02	77	0.013	103	103	8.5	-0.06	0.62		108.4	168.3	165.0	59.8	168.2	109	73	73	72		1.001	5.179	562
1141	183.612	184.615		0.16	0.16	1.32	1.07	0.25	83	83	72	1.80	2.00	77	0.012	107	108	8.4	0.10	0.64		108.0	168.0	164.6	59.8	167.9	108	73	73	72		1.001	5.344	578
1142	183.773	184.778		0.16	0.16	1.32	1.07	0.25	83	83	72	1.80	2.01	77	0.015	96	96	8.3	0.09	0.66		107.8	167.8	164.5	59.9	167.6	108	73	73	72		1.001	5.503	594
1143	183.934	184.941		0.16	0.16	1.32	1.07	0.25	83	83	72	1.80	2.01	77	0.014	99	100	8.5	-0.22	0.64		107.5	167.5	164.2	59.8	167.4	107	73	73	72		1.001	5.343	575
1144	184.096	185.105		0.16	0.16	1.33	1.07	0.25	83	83	72	1.80	2.00	77	0.016	93	94	8.4	0.14	0.64		107.3	167.4	164.0	59.8	167.1	106	73	73	72		1.001	5.345	574
1145	184.257	185.268		0.16	0.16	1.32	1.07	0.25	83	83	72	1.80	2.00	77	0.013	103	103	8.4	0.05	0.64		106.9	167.0	163.7	59.9	166.8	105	73	73	72		1.001	5.342	572
1146	184.418	185.431		0.16	0.16	1.32	1.07	0.25	83	83	72	1.80	2.01	77	0.012	107	108	8.5	-0.11	0.62		106.7	166.8	163.4	59.9	166.6	105	73	73	72		1.001	5.189	554
1147	184.580	185.594		0.16	0.16	1.32	1.07	0.25	83	83	72	1.80	2.00	77	0.012	107	108	8.4	0.05	0.64		106.4	166.5	163.2	59.9	166.3	104	73	73	72		1.001	5.347	569
1148	184.741	185.757		0.16	0.16	1.32	1.07	0.25	83	83	72	1.80	2.00	77	0.013	103	103	8.4	0.07	0.62		106.0	166.1	162.9	60.0	166.0	104	73	73	72		1.001	5.182	550
1149	184.902	185.921		0.16	0.16	1.32	1.07	0.25	83	83	72	1.80	2.01	77	0.012	107	108	8.4	-0.08	0.60		105.7	165.8	162.6	60.0	165.7	103	73	73	72		1.001	5.018	531
1150	185.063	186.084		0.16	0.16	1.32	1.07	0.25	83	83	72	1.80	2.00	77	0.013	103	103	8.5	-0.03	0.62		105.5	165.7	162.3	60.0	165.5	103	73	73	72		1.001	5.186	548
1151	185.225	186.248		0.16	0.16	1.32	1.07	0.25	83	83	72	1.80	2.01	77	0.013	103	104	8.4	0.10	0.62		105.3	165.4	162.2	59.9	165.3	102	73	73	72		1.001	5.182	547
1152	185.386	186.411		0.16	0.16	1.32	1.07	0.25	83	83	72	1.80	2.01	77	0.013	103	103	8.6	-0.20	0.60		105.0	165.1	161.9	59.9	165.0	101	73	73	72		1.001	5.023	528
1153	185.547	186.573		0.16	0.16	1.33	1.07	0.25	83	83	72	1.80	2.00	77	0.013	103	103	8.5	0.10	0.62		104.8	164.9	161.6	59.9	164.7	101	73	73	72		1.001	5.185	544
1154	185.709	186.737		0.16	0.16	1.32	1.06	0.25	83	83	72	1.80	2.00	77	0.015	96	97	8.4	0.03	0.60		104.6	164.6	161.3	59.8	164.4	101	73	73	72		1.001	5.023	526
1155	185.870	186.900		0.16	0.16	1.32	1.07	0.25	83	83	72	1.80	2.01	77	0.014	99	100	8.4	0.00	0.58		104.5	164.3	161.1	59.7	164.2	100	73	73	72		1.001	4.857	508
1156	186.031	187.064		0.16	0.16	1.32	1.06	0.25	83	83	72	1.80	2.00	79	0.013	103	104	8.4	0.07	0.62		104.2	164.0	160.8	59.6	163.9	122	73	73	72		1.001	5.181	541
1157	186.193	187.226		0.16	0.16	1.32	1.06	0.25	83	83	72	1.80	2.01	81	0.013	104	103	8.4	-0.02	0.60		104.0	163.7	160.4	59.6	163.5	142	73	73	72		1.001	5.017	522
1158	186.354	187.389		0.16	0.16	1.32	1.07	0.25	83	83	72	1.80	2.01	78	0.014	99	100	8.5	-0.11	0.64		103.8	163.5	160.3	59.5	163.3	130	73	73	72		1.001	5.305	551
1159	186.515	187.552		0.16	0.16	1.32	1.07	0.25	83	83	72	1.80	2.01	78	0.015	96	96	8.4	0.11	0.62		103.6	163.3	160.1	59.5	163.1	120	73	73	72		1.001	5.182	537
1160	186.677	187.715		0.16	0.16	1.32	1.07	0.25	83	83	72	1.80	2.00	78	0.013	103	103	8.4	-0.05	0.66		103.3	163.0	159.8	59.5	162.9	114	73	73	72		1.001	5.503	569
1161	186.838	187.879		0.16	0.16	1.32	1.07	0.25	83	83	72	1.80	2.00	77	0.014	99	100	8.5	-0.09	0.66		103.0	162.7	159.5	59.6	162.6	111	73	73	72		1.001	5.503	567
1162	186.999	188.042		0.16	0.16	1.32	1.07	0.25	83	83	72	1.80	2.01	77	0.015	96	96	8.4	0.16	0.62		102.7	162.5	159.3	59.6	162.3	108	73	73	72		1.001	5.180	533
1163	187.161	188.205		0.16	0.16	1.32	1.07	0.25	83	83	72	1.80	1.99	77	0.015	96	96	8.4	-0.04	0.66		102.4	162.1	158.9	59.6	162.0	107	73	73	72		1.001	5.502	564
1164	187.322	188.368		0.16	0.16	1.33	1.07	0.25	83	83	72	1.80	2.01	78	0.014	99	100	8.4	-0.01	0.64		102.0	161.8	158.6	59.7	161.7	106	73	73	72		1.001	5.341	546
1165	187.484	188.531		0.16	0.16	1.31	1.07	0.25	83	83	72	1.80	2.02	82	0.013	104	104	8.3	0.10	0.62		101.8	161.7	158.5	59.7	161.5	141	73	73	72		1.001	5.181	528
1166	187.645	188.694		0.16	0.16	1.31	1.07	0.25	83	83	72	1.80	2.00	83	0.016	93	94	8.2	0.07	0.66		101.5	161.4	158.2	59.8	161.2	156	73	73	72		1.001	5.503	559
1167	187.806	188.857		0.16	0.16	1.31	1.06	0.25	83	83	72	1.80	2.00	84	0.015	96	97	8.2	0.08	0.62		101.2	161.2	158.0	59.8	161.0	167	73	73	72		1.001	5.180	525
1168	187.967	189.019		0.16	0.16	1.31	1.06	0.25	83	83	71	1.80	2.02	87	0.015	96	97	8.0	0.11	0.62		100.9	160.9	157.8	59.8	160.7	179	73	73	71		1.001	5.181	523

Elapsed Time	Particulate Sampling Data																	Fuel Weight, lb		Flow, gpm		Temperature Data, oF									Stack			
	Gas Meter Cubic Feet (1)	Gas Meter Cubic Feet (2)	Gas Meter Cubic Feet (amb)	Sample Rate, cfm (1)	Sample Rate, cfm (2)	Orifice dH (1)	Orifice dH (2)	Orifice dH (amb)	Meter oF (1)	Meter oF (2)	Meter oF (amb)	Meter Vac. in. Hg. (1)	Meter Vac. in. Hg. (2)	Dilution Tunnel Temp.	Dilution Tunnel dP	Pro. Rate (%) (1)	Pro. Rate (%) (2)	Scale Reading	Weight Change	Load Side Liquid Flow Rate	Boiler Side Liquid Flow Rate (optional)	Thermopile ΔT	Boiler to Heat Exch. Temp.	Heat Exch to Boiler Temp.	Inlet Load Temp.	Outlet Load Temp.	Stack	Filter (1)	Filter (2)	Ambient		Specific Heat of Inlet Water (BTU/lb-°F)	Mass Flow Rate of Inlet Water (lb/min)	Heat Output, Btu
1169	188.125	189.180		0.16	0.16	1.31	1.05	0.25	83	83	70	1.80	2.02	89	0.015	97	96	7.7	0.34	0.64		100.8	160.8	157.6	59.8	160.6	193	73	73	70		1.001	5.347	539
1170	188.289	189.343		0.16	0.16	1.31	1.05	0.25	83	83	70	1.80	2.00	91	0.016	94	94	7.5	0.20	0.62		100.7	160.8	157.6	59.8	160.5	206	73	73	70		1.001	5.195	524
1171	188.450	189.503		0.16	0.16	1.31	1.04	0.25	83	83	70	1.80	2.01	93	0.014	100	99	7.3	0.25	0.60		100.8	160.9	157.7	59.8	160.6	219	73	73	70		1.001	5.034	508
1172	188.611	189.663		0.16	0.16	1.32	1.04	0.25	83	83	70	1.90	2.02	94	0.013	104	103	7.1	0.14	0.61		100.8	161.0	157.9	59.9	160.7	231	73	74	70		1.001	5.102	515
1173	188.772	189.824		0.16	0.16	1.32	1.02	0.25	83	83	71	1.90	2.02	95	0.014	101	100	6.7	0.42	0.61		101.0	161.2	158.2	59.9	160.9	241	73	74	71		1.001	5.071	513
1174	188.933	189.982		0.16	0.16	1.32	1.01	0.25	83	83	71	1.90	2.01	96	0.013	104	102	6.7	0.01	0.60		101.2	161.7	158.6	60.1	161.3	250	74	74	71		1.001	5.024	509
1175	189.094	190.140		0.16	0.16	1.31	1.00	0.25	83	83	71	2.00	2.02	97	0.014	101	98	6.3	0.35	0.58		101.5	162.1	159.0	60.2	161.7	258	74	74	71		1.001	4.863	494
1176	189.255	190.297		0.16	0.16	1.31	0.98	0.25	83	83	71	2.00	2.02	98	0.015	97	95	5.9	0.44	0.56		101.9	162.6	159.5	60.3	162.2	266	74	74	71		1.001	4.700	480
1177	189.415	190.453		0.16	0.16	1.31	0.97	0.25	83	83	71	2.00	2.03	99	0.013	104	101	5.6	0.30	0.62		102.4	163.2	160.1	60.4	162.8	274	74	74	71		1.001	5.189	532
1178	189.575	190.608		0.16	0.16	1.31	0.95	0.25	83	83	71	2.10	2.03	100	0.014	100	97	5.2	0.41	0.60		103.0	164.0	160.7	60.4	163.4	281	74	74	71		1.001	5.019	518
1179	189.736	190.761		0.16	0.15	1.31	0.95	0.25	83	83	71	2.10	2.03	101	0.014	101	96	5.1	0.13	0.64		103.8	164.8	161.5	60.5	164.3	287	74	74	71		1.001	5.343	555
1180	189.896	190.913		0.16	0.15	1.31	0.92	0.25	83	83	71	2.20	2.05	102	0.013	104	99	4.7	0.35	0.62		104.6	165.7	162.3	60.5	165.1	292	75	75	71		1.001	5.183	543
1181	190.056	191.064		0.16	0.15	1.31	0.91	0.25	83	83	71	2.20	2.03	102	0.014	101	94	4.4	0.29	0.62		105.6	166.7	163.4	60.5	166.2	297	75	75	71		1.001	5.181	548
1182	190.220	191.226		0.16	0.16	1.32	1.07	0.25	83	83	71	2.60	2.07	103	0.014	103	101	3.9	0.47	0.62		106.7	167.8	164.4	60.6	167.2	302	75	75	71		1.001	5.187	554
1183	190.382	191.388		0.16	0.16	1.33	1.05	0.25	83	83	71	2.70	2.07	104	0.014	102	101	3.9	0.05	0.62		107.5	168.7	165.3	60.6	168.2	306	75	75	71		1.001	5.166	556
1184	190.543	191.548		0.16	0.16	1.33	1.01	0.25	83	83	72	2.80	2.07	104	0.014	101	100	3.4	0.49	0.62		108.5	169.8	166.4	60.7	169.1	310	75	75	72		1.001	5.177	562
1185	190.705	191.705		0.16	0.16	1.33	0.98	0.25	83	83	72	3.00	2.09	105	0.015	99	95	3.2	0.22	0.60		109.4	170.8	167.2	60.7	170.2	314	76	76	72		1.001	5.017	550
1186	190.866	191.860		0.16	0.16	1.33	0.95	0.25	83	83	72	3.10	2.08	106	0.014	102	97	2.9	0.29	0.63		110.4	171.8	168.3	60.7	171.2	318	76	76	72		1.001	5.220	577
1187	191.027	192.012		0.16	0.15	1.33	0.91	0.25	83	83	72	3.20	2.10	106	0.014	102	95	2.6	0.26	0.62		111.4	172.8	169.2	60.8	172.1	322	76	76	72		1.001	5.125	571
1188	191.188	192.161		0.16	0.15	1.32	0.87	0.25	83	83	72	3.40	2.08	107	0.015	98	90	2.2	0.46	0.66		112.3	173.8	170.3	60.8	173.1	326	76	76	72		1.001	5.506	619
1189	191.349	192.306		0.16	0.15	1.32	0.84	0.25	83	83	71	3.60	2.10	107	0.013	105	95	1.8	0.38	0.58		113.2	174.7	171.2	60.8	174.1	329	76	76	71		1.001	4.855	550
1190	191.510	192.449		0.16	0.14	1.32	0.80	0.25	83	83	72	3.70	2.10	108	0.016	95	84	1.6	0.24	0.66		114.2	175.6	171.8	60.8	175.0	332	77	76	72		1.001	5.502	629
1191	191.671	192.589		0.16	0.14	1.32	0.77	0.25	83	83	72	3.90	2.11	108	0.014	102	88	1.2	0.40	0.62		115.3	176.7	172.8	60.7	176.0	335	77	76	72		1.001	5.183	598
1192	191.832	192.727		0.16	0.14	1.32	0.74	0.25	83	83	72	4.00	2.12	109	0.014	102	87	0.8	0.34	0.62		116.5	177.7	173.8	60.5	177.0	337	77	77	72		1.001	5.179	604
1193	191.992	192.881		0.16	0.15	1.32	1.05	0.25	83	83	72	5.30	2.12	109	0.014	101	97	0.3	0.51	0.66		117.8	178.8	174.9	60.3	178.1	339	77	77	72		1.001	5.502	649
1194	192.152	193.041	306.035	0.16	0.16	1.31	1.03	0.25	83	83	72	5.50	2.13	110	0.015	98	97	0.0	0.31	0.66		119.2	179.8	175.9	60.0	179.2	341	77	77	72		1.001	5.503	657
	192.152	193.041	306.035			1.31	1.05	0.25	83	83	72			84	0.014					0.61	#DIV/0!	113.4	174.1	170.8	60.4	173.8		74.11	74.15		#DIV/0!			575
																																	TOTAL:	686419

OMNI-Test Laboratories

Manufacturer:	Central Boiler
Model:	Edge 560
Date:	10/17/19
Run:	5
Control #:	2374
Test Duration:	2114
Output Category:	I

Technicians: _____

_____

_____

Test Results in Accordance with CSA B415.1-09

	HHV Basis	LHV Basis
Overall Efficiency	78.7%	84.7%
Combustion Efficiency	95.8%	95.8%
Heat Transfer Efficiency	82%	88.4%

Output Rate (kJ/h)	25,305	24,004	**(Btu/h)**
Burn Rate (kg/h)	1.62	3.57	**(lb/h)**
Input (kJ/h)	32,169	30,516	**(Btu/h)**

Test Load Weight (dry kg)	56.99	125.61	**dry lb**
MC wet (%)	17.9		
MC dry (%)	21.80		
Particulate (g)	58.96		
CO (g)	4,359		
Test Duration (h)	35.23		

Emissions	**Particulate**	**CO**
g/MJ Output	0.07	4.89
g/kg Dry Fuel	1.03	76.49
g/h	1.67	123.73
lb/MM Btu Output	0.15	11.36

Air/Fuel Ratio (A/F)	25.75

VERSION: 2.2 12/14/2009

VERSION: 2.2 12/14/2009

Manufacturer: Central Boiler
Model: Edge 560
Date: 10/17/2019
Run: 5
Control #: 2374
Test Duration: 2114
Output Category: I

Appliance Type: Non-Cat (Cat, Non

Temp. Units F (F or C)
Weight Units lb (kg or lb)

Wood Moisture (% wet): 17.90
Load Weight (lb wet): 153.00
Burn Rate (dry kg/h): 1.62
Total Particulate Emissions: 58.96 g

Fuel Data

	Oak	
HHV	19,887	kj/kg
%C	50	
%H	6.6	
%O	42.9	
%ASH	0.5	

	Averages	**0.56**	**4.19**	**#DIV/0!**	**141.73**	**67.93**
					Temp. (ºF)	
Elapsed Time (min)	**Fuel Weight Remaining (lb)**	**Flue Gas Composition (%) CO**	**CO_2**	**O_2**	**Flue Gas**	**Room Temp**
0	153.0	0.1	5.8		265	70
1	152.4	0.0	5.7		239	70
2	151.6	0.2	2.1		244	70
3	151.2	0.4	4.2		261	70
4	150.2	0.1	5.9		271	70
5	149.5	0.0	5.8		279	70
6	148.9	0.0	5.4		284	70
7	148.4	0.0	5.3		289	70
8	147.8	0.0	5.1		293	70
9	147.1	0.0	5.0		296	70
10	146.8	0.0	4.8		298	70
11	145.8	0.0	3.4		301	70
12	145.2	0.0	0.4		296	70
13	145.1	0.1	15.7		267	70
14	145.1	0.1	8.6		249	70
15	145.1	0.1	4.6		237	70
16	145.1	0.1	3.3		228	70
17	144.9	0.1	2.6		222	70
18	145.0	0.1	2.4		217	70
19	145.0	0.1	2.2		212	70
20	145.2	0.1	2.0		208	70
21	144.9	0.1	1.9		204	70

22	144.9	0.1	1.9		200	70
23	144.9	0.1	1.8		197	70
24	145.0	0.1	1.8		194	70
25	145.1	0.1	1.7		191	70
26	144.9	0.1	1.6		188	70
27	145.0	0.1	1.5		184	70
28	145.2	0.1	1.1		180	70
29	145.0	0.1	0.9		176	70
30	145.1	0.0	0.7		173	70
31	145.0	0.0	0.6		170	70
32	145.0	0.0	0.5		168	70
33	144.9	0.0	0.6		165	70
34	145.1	0.0	0.7		162	70
35	145.1	0.1	0.8		160	70
36	145.0	0.1	1.1		158	70
37	145.0	0.1	1.1		155	70
38	145.2	0.1	1.1		153	70
39	145.1	0.1	1.2		151	70
40	145.1	0.1	1.3		149	70
41	145.2	0.1	1.3		147	70
42	145.3	0.1	1.4		145	70
43	145.1	0.1	1.4		143	70
44	145.2	0.1	1.5		141	69
45	145.3	0.1	1.4		139	69
46	145.2	0.1	1.5		138	69
47	145.0	0.1	1.5		136	69
48	145.1	0.1	1.6		134	70
49	145.1	0.1	1.5		133	69
50	145.1	0.1	1.6		131	69
51	145.2	0.1	1.5		130	69
52	145.2	0.1	1.8		128	69
53	145.3	0.1	1.6		127	69
54	145.1	0.1	1.7		126	70
55	145.2	0.1	1.5		124	69
56	145.3	0.1	1.6		123	69
57	145.4	0.1	1.5		122	69
58	145.3	0.1	1.5		121	69
59	145.4	0.1	1.6		120	69
60	145.4	0.2	1.7		118	69
61	145.2	0.2	1.8		117	69
62	145.3	0.1	1.7		116	69
63	145.3	0.2	1.8		115	69

64	145.3	0.1	1.7		114	69
65	145.3	0.2	1.8		113	69
66	145.4	0.2	1.8		113	69
67	145.3	0.2	1.9		154	69
68	145.2	3.1	12.1		139	69
69	145.3	2.4	9.3		131	69
70	145.3	2.4	9.2		125	69
71	145.3	1.9	7.3		121	69
72	145.3	1.6	5.9		118	69
73	145.3	1.4	5.2		116	69
74	145.1	1.2	4.5		114	69
75	145.3	1.0	3.8		113	69
76	145.2	1.1	3.9		111	69
77	145.2	0.9	3.2		110	69
78	145.4	0.8	3.0		109	69
79	145.3	0.8	2.8		109	69
80	145.5	0.8	2.7		108	69
81	145.3	0.7	2.6		107	69
82	145.2	0.7	2.4		106	69
83	145.3	0.6	2.2		105	69
84	145.2	0.6	2.0		105	69
85	145.3	0.5	1.9		104	69
86	145.3	0.5	1.8		103	69
87	145.3	0.4	1.6		102	69
88	145.3	0.4	1.6		101	69
89	145.4	0.4	1.5		101	69
90	145.4	0.4	1.4		100	69
91	145.5	0.4	1.4		100	69
92	145.4	0.4	1.4		99	69
93	145.4	0.3	1.3		99	69
94	145.5	0.3	1.2		98	69
95	145.4	0.3	1.2		98	69
96	145.4	0.3	1.1		98	69
97	145.5	0.3	1.1		101	69
98	145.2	0.6	2.4		138	69
99	145.2	2.8	11.0		128	68
100	145.3	2.4	9.2		121	69
101	145.2	2.3	8.8		116	69
102	145.3	1.9	7.4		112	69
103	145.2	1.6	6.3		109	69
104	145.3	1.5	5.8		107	69
105	145.3	1.3	5.2		105	68

106	145.2	1.1	4.2		103	68
107	145.3	1.0	3.8		102	68
108	145.3	1.0	3.8		101	68
109	145.4	0.8	3.2		100	68
110	145.3	0.8	3.0		99	68
111	145.3	0.7	2.8		98	68
112	145.5	0.7	2.7		97	68
113	145.4	0.6	2.4		97	68
114	145.2	0.6	2.3		96	68
115	145.3	0.5	2.0		95	68
116	145.3	0.5	1.9		94	68
117	145.4	0.4	1.8		93	68
118	145.2	0.5	1.8		92	68
119	145.2	0.4	1.8		92	68
120	145.4	0.4	1.6		91	68
121	145.3	0.4	1.6		91	68
122	145.3	0.4	1.5		91	68
123	145.4	0.4	1.5		90	68
124	145.4	0.4	1.5		90	68
125	145.4	0.3	1.4		89	68
126	145.4	0.3	1.3		89	68
127	145.4	0.3	1.3		89	68
128	145.5	0.3	1.2		109	68
129	145.2	1.1	5.0		127	68
130	145.1	2.7	10.5		121	68
131	145.3	2.5	9.3		116	68
132	145.2	2.6	9.6		112	68
133	145.2	2.1	7.7		109	68
134	145.3	1.7	6.4		107	68
135	145.2	1.7	6.4		104	68
136	145.3	1.4	5.1		103	68
137	145.2	1.4	5.1		101	68
138	145.2	1.1	4.0		100	68
139	145.3	1.1	4.1		99	68
140	145.1	0.9	3.3		98	68
141	145.2	1.0	3.7		96	68
142	145.2	0.9	3.3		96	68
143	145.4	0.9	3.3		95	68
144	145.2	0.8	2.9		95	68
145	145.2	0.7	2.7		94	68
146	145.3	0.6	2.4		93	68
147	145.2	0.6	2.4		92	68

148	145.3	0.6	2.3		91	68
149	145.2	0.5	1.9		90	68
150	145.3	0.5	1.9		91	68
151	145.4	0.5	1.9		90	68
152	145.3	0.5	2.0		90	68
153	145.2	0.4	1.7		89	68
154	145.3	0.5	1.8		89	68
155	145.2	0.4	1.6		88	68
156	145.3	0.4	1.5		88	68
157	145.4	0.4	1.5		87	68
158	145.3	0.4	1.5		86	68
159	145.1	0.4	1.4		122	68
160	145.2	1.5	8.0		117	68
161	145.1	1.9	8.7		113	68
162	145.1	2.0	8.6		110	68
163	145.2	1.9	8.2		107	68
164	145.2	1.6	6.9		105	68
165	145.2	1.4	5.9		104	68
166	145.0	1.2	5.2		101	68
167	145.1	1.0	4.5		101	68
168	145.0	1.1	4.7		99	68
169	145.2	1.0	4.2		99	68
170	145.1	0.9	3.7		97	68
171	145.2	0.8	3.5		96	68
172	145.2	0.8	3.4		95	68
173	145.2	0.7	2.8		95	68
174	145.1	0.6	2.8		95	68
175	145.1	0.6	2.7		94	68
176	145.2	0.6	2.5		93	67
177	145.2	0.5	2.3		93	67
178	145.1	0.5	2.2		91	67
179	145.3	0.5	2.2		91	68
180	145.2	0.4	2.0		90	67
181	145.1	0.4	1.8		90	67
182	145.1	0.4	1.7		90	67
183	145.2	0.4	1.8		89	67
184	144.9	0.4	1.6		124	67
185	144.5	0.9	8.6		148	67
186	143.9	5.1	13.9		188	67
187	143.2	4.6	17.7		205	67
188	142.5	5.2	17.2		222	67
189	141.9	4.2	18.3		240	67

190	141.1	2.7	19.1		256	67
191	140.1	2.2	19.4		271	67
192	139.4	1.7	19.6		284	67
193	138.6	0.8	19.9		293	67
194	137.8	0.3	19.6		301	67
195	137.1	0.2	19.2		308	67
196	136.0	0.3	19.3		316	67
197	135.1	0.3	19.2		322	67
198	134.6	0.2	18.7		324	67
199	133.6	0.1	17.8		325	67
200	132.8	0.1	17.8		327	67
201	132.0	0.2	17.6		328	67
202	131.3	0.2	17.6		330	67
203	130.6	0.2	17.9		333	67
204	129.6	0.1	18.2		336	67
205	129.3	0.1	18.3		305	67
206	128.8	0.3	16.2		278	67
207	128.9	0.2	13.8		261	67
208	128.6	0.3	9.8		249	67
209	128.6	0.4	7.1		241	67
210	128.5	0.4	5.7		234	67
211	128.5	0.3	5.5		228	67
212	128.5	0.3	4.3		222	67
213	128.6	0.3	3.6		217	67
214	128.4	0.2	3.2		213	67
215	128.4	0.2	2.9		209	67
216	128.3	0.2	2.7		205	67
217	128.3	0.2	2.6		202	67
218	128.5	0.2	2.4		199	67
219	128.5	0.2	2.3		195	67
220	128.3	0.1	1.8		192	67
221	128.5	0.1	1.5		188	67
222	128.4	0.1	1.3		185	67
223	128.4	0.1	1.2		181	67
224	128.3	0.1	1.1		178	67
225	128.5	0.1	1.2		175	67
226	128.3	0.1	1.3		172	67
227	128.4	0.1	1.6		169	67
228	128.5	0.1	1.9		167	67
229	128.4	0.1	2.2		164	67
230	128.5	0.1	2.1		161	67
231	128.5	0.1	2.1		159	67

232	128.4	0.2	2.4		156	67
233	128.6	0.2	2.4		154	67
234	128.6	0.2	2.4		152	67
235	128.5	0.2	2.6		150	67
236	128.5	0.2	2.4		148	67
237	128.5	0.2	2.5		146	67
238	128.5	0.2	2.5		144	67
239	128.6	0.2	2.4		142	67
240	128.5	0.2	2.6		140	67
241	128.6	0.2	2.4		138	67
242	128.6	0.2	2.5		136	67
243	128.6	0.2	2.5		135	67
244	128.6	0.2	2.5		133	67
245	128.5	0.2	2.3		131	67
246	128.6	0.2	2.6		130	67
247	128.5	0.2	2.5		128	67
248	128.7	0.2	2.6		127	67
249	128.6	0.2	2.5		126	67
250	128.6	0.2	2.7		125	67
251	128.7	0.2	2.7		123	67
252	128.6	0.2	2.6		122	67
253	128.8	0.2	2.6		121	67
254	128.8	0.2	2.5		120	67
255	128.7	0.2	2.5		119	67
256	128.7	0.2	2.6		118	67
257	128.8	0.2	2.7		117	67
258	128.8	0.2	2.6		115	67
259	128.7	0.2	2.6		153	67
260	128.5	0.5	4.7		153	67
261	128.5	0.8	5.2		143	67
262	128.4	0.8	5.1		135	67
263	128.5	0.7	5.2		130	67
264	128.6	0.7	5.1		127	67
265	128.5	0.6	4.8		125	67
266	128.4	0.5	4.3		123	67
267	128.5	0.5	3.7		121	67
268	128.5	0.4	3.1		119	67
269	128.6	0.4	3.1		118	67
270	128.4	0.3	2.8		116	67
271	128.4	0.3	2.7		115	67
272	128.6	0.3	2.7		114	67
273	128.5	0.3	2.6		112	67

274	128.6	0.3	2.4		111	67
275	128.5	0.3	2.4		110	67
276	128.5	0.3	2.3		109	67
277	128.6	0.3	2.4		108	67
278	128.6	0.3	2.3		106	67
279	128.6	0.3	2.3		105	67
280	128.7	0.3	2.2		105	67
281	128.7	0.2	2.1		103	67
282	128.6	0.2	2.1		103	67
283	128.7	0.3	2.2		101	67
284	128.6	0.2	2.0		101	67
285	128.6	0.2	1.8		101	67
286	128.6	0.2	2.0		100	67
287	128.7	0.2	2.0		99	67
288	128.6	0.2	1.8		99	67
289	128.7	0.2	1.8		98	67
290	128.6	0.2	1.8		140	67
291	128.4	0.3	3.4		134	67
292	128.4	0.6	4.0		129	67
293	128.4	0.6	3.8		125	67
294	128.4	0.6	3.6		122	67
295	128.5	0.5	3.5		120	67
296	128.5	0.5	3.3		118	67
297	128.5	0.4	3.0		117	67
298	128.5	0.4	2.8		114	67
299	128.5	0.4	2.6		113	67
300	128.5	0.4	2.6		113	67
301	128.5	0.3	2.4		110	67
302	128.6	0.3	2.1		110	67
303	128.5	0.3	2.2		108	67
304	128.5	0.3	2.1		108	67
305	128.6	0.3	2.0		107	67
306	128.6	0.3	2.1		106	67
307	128.6	0.2	1.9		105	67
308	128.6	0.2	1.9		104	67
309	128.4	0.2	1.8		103	67
310	128.7	0.2	1.8		103	67
311	128.6	0.2	1.7		102	67
312	128.6	0.2	1.7		102	67
313	128.7	0.2	1.7		101	67
314	128.8	0.2	1.6		100	67
315	128.6	0.2	1.5		100	67

316	128.7	0.2	1.6		100	67
317	128.5	0.2	1.5		98	67
318	128.6	0.2	1.4		100	67
319	128.6	0.2	1.6		98	67
320	128.6	0.2	1.4		99	67
321	128.4	0.2	1.5		134	67
322	128.5	0.2	2.2		126	67
323	128.4	0.2	1.9		123	67
324	128.4	0.2	1.7		120	67
325	128.5	0.2	1.6		117	67
326	128.4	0.2	1.5		115	67
327	128.4	0.2	1.4		113	67
328	128.6	0.1	1.3		112	67
329	128.4	0.1	1.3		111	67
330	128.5	0.1	1.2		109	67
331	128.5	0.1	1.1		108	67
332	128.4	0.1	1.2		107	67
333	128.5	0.1	1.2		106	67
334	128.4	0.1	1.1		105	67
335	128.3	0.1	1.1		105	67
336	128.5	0.1	1.1		104	67
337	128.6	0.1	1.1		102	67
338	128.5	0.1	1.0		102	67
339	128.4	0.1	1.0		102	67
340	128.5	0.1	1.0		100	67
341	128.6	0.1	1.0		100	67
342	128.5	0.1	0.9		99	67
343	128.6	0.1	1.0		99	67
344	128.5	0.1	0.9		99	67
345	128.5	0.1	1.0		98	67
346	128.7	0.1	0.9		98	67
347	128.6	0.1	0.9		98	67
348	128.5	0.1	0.9		97	67
349	128.6	0.1	0.9		96	67
350	128.4	0.1	0.9		96	67
351	128.5	0.1	0.9		95	67
352	128.4	0.1	0.9		129	67
353	128.4	0.2	1.7		122	67
354	128.4	0.2	1.5		119	67
355	128.5	0.2	1.4		116	68
356	128.5	0.1	1.2		114	68
357	128.3	0.1	1.2		112	68

358	128.4	0.1	1.0		111	68
359	128.3	0.1	0.9		109	68
360	128.4	0.1	0.9		108	68
361	128.3	0.1	0.9		107	68
362	128.3	0.1	0.8		105	68
363	128.4	0.1	0.8		105	68
364	128.4	0.1	0.8		104	68
365	128.3	0.1	0.8		103	68
366	128.4	0.1	0.8		103	68
367	128.4	0.1	0.8		102	68
368	128.4	0.1	0.8		101	68
369	128.3	0.1	0.8		100	68
370	128.4	0.1	0.8		101	68
371	128.4	0.1	0.8		99	68
372	128.3	0.1	0.8		99	69
373	128.3	0.1	0.8		99	69
374	128.4	0.1	0.8		99	68
375	128.4	0.1	0.8		98	68
376	128.3	0.1	0.8		97	68
377	128.5	0.1	0.8		96	68
378	128.4	0.1	0.8		95	69
379	128.4	0.1	0.8		95	69
380	128.4	0.1	0.8		94	69
381	128.5	0.1	0.8		94	69
382	128.4	0.1	0.8		95	69
383	128.3	0.1	0.8		125	69
384	128.2	0.2	1.8		119	69
385	128.2	0.1	1.5		116	69
386	128.3	0.1	1.4		113	69
387	128.1	0.1	1.2		112	69
388	128.2	0.1	1.1		109	69
389	128.3	0.1	1.0		109	69
390	128.3	0.1	0.9		108	69
391	128.2	0.1	0.8		106	69
392	128.2	0.1	0.8		105	69
393	127.9	0.1	0.7		103	69
394	128.2	0.1	0.6		104	69
395	128.1	0.1	0.7		122	70
396	127.7	0.9	3.0		125	69
397	127.5	1.9	4.2		149	69
398	127.0	2.4	5.6		170	70
399	126.8	3.0	7.3		187	69

400	126.4	4.1	9.7		201	70
401	125.9	3.9	12.0		212	70
402	125.4	2.7	12.2		223	70
403	124.9	2.6	13.3		239	70
404	124.4	1.0	15.5		255	70
405	123.7	0.3	16.9		269	70
406	123.0	0.2	17.5		281	70
407	122.2	0.1	18.0		290	70
408	121.4	0.2	18.2		300	70
409	120.5	0.2	18.4		311	70
410	119.8	0.2	18.4		315	70
411	119.0	0.2	18.6		321	70
412	118.3	0.1	18.7		326	70
413	117.4	0.2	18.7		329	70
414	116.6	0.2	19.0		334	70
415	115.7	0.1	18.5		336	70
416	114.6	0.1	17.9		335	70
417	114.0	0.2	17.0		333	70
418	113.4	0.4	16.5		321	70
419	113.0	0.8	13.9		288	70
420	112.7	0.6	15.2		268	70
421	112.4	0.3	13.4		253	70
422	112.4	0.4	10.5		243	72
423	112.3	0.8	7.3		237	71
424	112.2	0.6	8.1		230	71
425	112.1	0.7	6.7		224	71
426	112.0	0.6	5.5		219	71
427	112.0	0.5	4.8		215	71
428	112.0	0.5	4.6		211	71
429	111.9	0.5	4.3		207	71
430	111.9	0.5	4.1		203	71
431	112.0	0.6	3.9		200	71
432	111.9	0.6	3.8		197	71
433	111.8	0.5	3.3		194	70
434	111.8	0.4	2.6		191	70
435	111.9	0.4	2.5		188	70
436	111.7	0.4	2.5		184	70
437	111.8	0.4	2.7		181	70
438	111.8	0.5	3.0		178	70
439	111.8	0.5	3.3		175	70
440	111.7	0.6	3.7		172	70
441	111.9	0.6	3.9		170	70

442	111.8	0.6	3.9		167	70
443	111.9	0.6	4.1		165	70
444	111.8	0.7	4.3		162	70
445	111.9	0.7	4.4		160	70
446	111.8	0.7	4.5		158	70
447	111.9	0.7	4.4		155	70
448	111.9	0.7	4.5		153	70
449	111.8	0.7	4.7		151	70
450	111.7	0.7	4.6		149	69
451	111.9	0.7	4.6		147	69
452	111.8	0.8	4.9		145	69
453	111.8	0.7	4.8		144	69
454	111.9	0.7	4.6		142	69
455	111.8	0.8	4.9		140	69
456	111.9	0.7	4.7		139	69
457	111.9	0.7	4.7		137	69
458	111.9	0.7	4.6		136	68
459	112.0	0.7	4.8		134	69
460	111.9	0.7	4.6		133	68
461	111.9	0.8	5.0		131	68
462	111.9	0.7	4.4		130	68
463	112.0	0.7	4.6		129	69
464	112.0	0.8	5.0		127	68
465	111.9	0.7	4.8		126	68
466	111.9	0.7	4.5		125	68
467	112.0	0.7	4.6		123	68
468	112.0	0.7	4.5		123	68
469	112.0	0.7	4.3		121	68
470	112.1	0.6	4.2		121	68
471	112.0	0.7	4.7		120	68
472	111.9	0.7	4.6		127	68
473	111.8	1.0	6.1		153	68
474	111.9	0.3	2.8		145	68
475	111.8	0.3	2.5		138	68
476	111.8	0.3	2.6		134	68
477	111.7	0.4	2.8		132	68
478	111.7	0.4	2.9		129	68
479	111.7	0.3	2.6		127	68
480	111.7	0.3	2.4		125	68
481	111.9	0.3	2.3		124	68
482	111.7	0.3	2.2		123	68
483	111.8	0.3	2.1		121	68

484	111.8	0.3	2.1		121	68
485	111.8	0.3	2.2		120	68
486	111.8	0.3	2.2		119	68
487	111.9	0.3	2.1		118	68
488	111.8	0.3	2.2		116	68
489	111.8	0.2	2.0		115	68
490	111.9	0.2	2.0		114	68
491	111.9	0.2	2.0		113	68
492	111.8	0.2	2.0		112	68
493	111.9	0.2	2.0		111	68
494	111.9	0.2	2.0		111	67
495	111.9	0.2	2.0		109	68
496	111.8	0.2	2.0		109	68
497	112.0	0.2	2.0		109	68
498	111.9	0.2	2.0		108	67
499	111.9	0.2	2.0		108	67
500	111.8	0.2	2.0		108	67
501	112.0	0.2	2.0		106	67
502	111.9	0.2	1.9		106	67
503	111.8	0.2	1.9		134	67
504	111.9	0.4	3.6		135	67
505	111.7	0.2	1.6		130	67
506	111.7	0.1	1.4		127	67
507	111.7	0.1	1.3		124	67
508	111.9	0.1	1.3		122	67
509	111.8	0.1	1.2		121	67
510	111.7	0.1	1.3		119	67
511	111.9	0.1	1.2		116	67
512	111.7	0.1	1.1		116	67
513	111.9	0.1	1.2		115	67
514	111.7	0.1	1.1		113	67
515	111.8	0.1	1.2		114	67
516	111.7	0.1	1.1		111	67
517	111.9	0.1	1.1		112	67
518	111.9	0.1	1.1		111	67
519	111.8	0.1	1.1		110	67
520	112.0	0.1	1.2		111	67
521	111.8	0.1	1.1		108	67
522	111.8	0.1	1.2		109	67
523	112.1	0.1	1.2		108	67
524	111.9	0.1	1.3		106	67
525	112.0	0.1	1.2		107	67

526	111.9	0.1	1.3		107	67
527	111.8	0.1	1.3		106	67
528	111.9	0.1	1.3		106	67
529	112.0	0.1	1.3		104	67
530	111.8	0.1	1.2		105	67
531	112.0	0.1	1.2		104	67
532	111.8	0.1	1.3		104	67
533	112.0	0.1	1.3		103	67
534	111.9	0.1	1.3		141	67
535	111.7	0.3	3.3		130	67
536	111.7	0.1	1.2		125	67
537	111.8	0.1	1.0		122	67
538	111.9	0.1	0.9		119	67
539	111.8	0.1	0.9		118	67
540	111.7	0.1	0.9		116	67
541	111.7	0.1	0.8		114	67
542	111.9	0.1	0.8		113	67
543	111.8	0.1	0.8		112	67
544	112.0	0.1	0.8		110	67
545	111.7	0.1	0.7		110	67
546	111.9	0.1	0.8		110	67
547	111.9	0.1	0.7		109	67
548	111.8	0.1	0.7		107	67
549	112.0	0.1	0.7		106	67
550	111.9	0.1	0.7		105	67
551	111.8	0.1	0.7		105	66
552	111.9	0.1	0.7		104	67
553	112.0	0.1	0.8		104	67
554	111.8	0.1	0.8		103	67
555	111.7	0.1	0.8		103	67
556	112.0	0.1	0.8		103	67
557	112.1	0.1	0.8		103	67
558	111.9	0.1	0.8		102	67
559	111.9	0.1	0.8		104	66
560	111.8	0.1	0.9		101	66
561	111.9	0.1	0.9		102	66
562	111.9	0.1	0.8		100	66
563	112.0	0.1	0.9		101	66
564	112.0	0.1	0.9		100	66
565	112.0	0.1	0.9		137	66
566	111.9	0.2	2.7		124	67
567	111.9	0.1	1.0		120	66

568	111.8	0.1	0.8		118	66
569	111.9	0.1	0.8		115	66
570	112.1	0.1	0.7		113	66
571	111.9	0.1	0.6		113	66
572	111.9	0.0	0.6		111	66
573	111.9	0.0	0.6		109	66
574	111.8	0.0	0.6		108	66
575	111.9	0.0	0.5		107	66
576	111.8	0.0	0.6		106	66
577	111.8	0.0	0.6		105	66
578	111.8	0.0	0.6		105	66
579	111.9	0.1	0.6		104	66
580	111.8	0.1	0.6		103	66
581	111.8	0.1	0.6		103	66
582	111.9	0.1	0.6		101	66
583	111.9	0.0	0.6		101	66
584	111.8	0.1	0.6		101	66
585	112.0	0.1	0.6		100	66
586	111.9	0.1	0.6		100	66
587	111.9	0.1	0.6		99	66
588	111.8	0.1	0.6		98	66
589	111.8	0.1	0.6		99	66
590	112.0	0.1	0.7		99	66
591	112.0	0.1	0.7		98	66
592	112.0	0.1	0.6		99	66
593	111.9	0.1	0.7		96	66
594	111.9	0.1	0.7		95	66
595	111.9	0.1	0.7		132	66
596	111.8	0.2	2.5		117	66
597	111.7	0.6	1.5		120	66
598	111.5	0.9	2.0		136	66
599	111.4	1.1	2.5		151	66
600	111.0	0.9	3.0		161	66
601	111.0	1.1	4.0		170	66
602	110.6	1.5	5.3		183	66
603	110.4	1.9	7.7		197	66
604	109.8	2.1	9.5		210	66
605	109.6	2.1	11.0		221	66
606	108.9	2.2	12.7		232	66
607	108.4	1.9	14.5		248	66
608	107.8	0.9	16.4		264	66
609	106.9	0.4	17.1		282	66

610	106.3	0.2	17.8		296	66
611	105.6	0.3	17.9		305	66
612	104.7	0.3	17.4		312	66
613	103.9	0.4	17.4		317	66
614	103.1	0.4	17.4		321	66
615	102.2	0.4	17.1		324	66
616	101.5	0.4	17.2		327	66
617	100.8	0.4	16.9		329	66
618	99.7	0.5	16.8		332	66
619	99.2	0.5	16.8		335	66
620	98.3	0.5	16.9		339	67
621	97.3	0.5	17.2		343	66
622	96.5	0.3	17.8		338	66
623	96.0	0.4	17.0		298	66
624	95.6	3.4	19.7		275	66
625	95.3	1.3	19.5		259	66
626	95.2	0.4	16.7		248	67
627	95.0	0.2	12.9		241	67
628	94.9	0.4	15.3		234	67
629	94.8	0.3	14.8		227	67
630	94.6	0.5	11.9		221	67
631	94.7	0.7	9.2		217	67
632	94.4	0.9	7.8		212	67
633	94.4	0.9	6.6		209	67
634	94.5	0.9	6.0		205	67
635	94.4	0.9	5.6		202	67
636	94.3	1.1	5.2		199	67
637	94.2	1.1	4.4		196	67
638	94.2	0.9	3.7		192	67
639	94.0	0.9	3.9		189	67
640	94.2	1.1	4.6		186	67
641	94.1	1.4	5.5		183	67
642	94.2	1.5	6.2		180	67
643	94.2	1.7	6.8		177	68
644	94.2	1.7	6.8		174	68
645	94.1	1.8	7.4		171	68
646	94.1	1.7	7.0		169	68
647	94.1	1.8	7.0		166	68
648	94.2	1.7	6.9		164	68
649	94.1	1.9	7.4		161	68
650	94.1	1.8	7.0		159	68
651	94.1	1.8	7.2		157	68

652	94.2	1.7	7.0		155	68
653	94.2	1.8	7.2		152	68
654	94.2	1.8	7.4		151	68
655	94.1	1.8	7.3		148	68
656	94.1	1.7	6.9		147	68
657	94.1	1.6	6.6		145	68
658	94.1	1.6	6.7		143	68
659	94.1	1.6	6.7		141	68
660	94.2	1.7	6.8		140	68
661	94.0	1.5	6.3		139	68
662	94.1	1.6	6.5		137	68
663	94.2	1.6	6.4		136	69
664	94.2	1.5	6.0		134	69
665	94.1	1.5	6.1		133	69
666	94.2	1.6	6.5		131	69
667	94.2	1.5	6.1		131	69
668	94.2	1.5	6.2		130	69
669	94.2	1.5	6.1		127	69
670	94.3	1.3	5.6		127	69
671	94.2	1.4	5.8		126	69
672	94.1	1.4	5.7		126	69
673	94.2	1.4	5.8		123	69
674	94.1	1.4	5.7		125	69
675	94.2	1.4	5.7		123	69
676	94.3	1.4	5.7		121	69
677	94.2	1.4	5.8		150	69
678	93.9	0.5	2.9		144	69
679	94.0	0.4	2.6		139	69
680	93.9	0.5	2.7		136	69
681	93.9	0.5	2.9		133	69
682	93.9	0.6	3.0		132	69
683	93.8	0.6	3.0		130	69
684	94.0	0.5	2.7		129	69
685	93.8	0.5	2.7		127	69
686	94.0	0.4	2.4		126	69
687	93.8	0.4	2.4		124	69
688	93.9	0.4	2.2		125	69
689	93.9	0.4	2.4		122	69
690	93.9	0.4	2.3		121	69
691	94.0	0.4	2.2		121	69
692	94.0	0.4	2.3		122	70
693	93.7	0.4	2.2		120	70

694	93.9	0.4	2.3		119	70
695	94.0	0.4	2.3		118	69
696	93.9	0.4	2.2		117	70
697	93.9	0.4	2.2		117	70
698	93.9	0.4	2.1		116	70
699	93.9	0.4	2.2		116	70
700	93.9	0.4	2.2		116	70
701	93.8	0.4	2.2		116	70
702	94.0	0.4	2.1		116	70
703	93.9	0.4	2.2		114	70
704	93.9	0.4	2.1		113	70
705	93.9	0.3	2.1		112	70
706	94.1	0.3	2.1		112	70
707	94.0	0.3	2.1		122	70
708	93.9	0.5	3.0		137	70
709	93.8	0.1	1.2		133	70
710	93.8	0.1	1.0		128	70
711	93.7	0.1	0.9		127	70
712	93.8	0.1	1.0		124	70
713	93.7	0.1	1.0		123	70
714	93.8	0.1	1.0		121	70
715	93.8	0.1	1.0		120	70
716	93.8	0.1	1.0		119	70
717	93.9	0.1	1.0		118	70
718	93.7	0.1	1.0		117	70
719	93.8	0.1	1.0		116	70
720	93.8	0.1	1.0		115	70
721	93.8	0.1	1.0		114	70
722	93.7	0.1	1.0		115	70
723	93.9	0.1	1.0		113	70
724	93.7	0.1	1.0		112	70
725	93.9	0.1	1.0		113	70
726	93.8	0.1	1.0		111	70
727	93.7	0.1	1.1		111	70
728	93.6	0.1	1.1		110	70
729	93.7	0.1	1.0		111	70
730	93.8	0.1	1.1		111	70
731	93.9	0.1	1.1		109	70
732	93.7	0.1	1.0		110	70
733	93.8	0.1	1.1		108	71
734	93.8	0.1	1.1		108	71
735	93.8	0.1	1.1		109	71

736	93.9	0.1	1.1		106	71
737	93.7	0.1	1.1		106	71
738	93.9	0.1	1.1		132	71
739	93.8	0.3	2.4		130	71
740	93.6	0.1	0.8		126	71
741	93.7	0.1	0.7		123	71
742	93.6	0.1	0.6		120	70
743	93.6	0.1	0.6		119	70
744	93.7	0.1	0.6		117	70
745	93.5	0.1	0.6		116	70
746	93.7	0.1	0.6		115	70
747	93.7	0.1	0.6		114	70
748	93.5	0.1	0.6		113	70
749	93.5	0.1	0.6		112	70
750	93.6	0.1	0.6		111	70
751	93.7	0.1	0.6		109	70
752	93.8	0.1	0.6		110	69
753	93.5	0.1	0.6		108	69
754	93.6	0.1	0.6		109	69
755	93.7	0.1	0.6		107	69
756	93.6	0.1	0.6		107	69
757	93.6	0.1	0.6		106	69
758	93.7	0.1	0.6		106	69
759	93.6	0.1	0.6		105	69
760	93.7	0.1	0.6		105	69
761	93.7	0.1	0.7		105	69
762	93.6	0.1	0.7		105	69
763	93.7	0.1	0.7		104	69
764	93.6	0.1	0.7		104	69
765	93.8	0.1	0.7		102	68
766	93.8	0.1	0.7		104	68
767	93.7	0.1	0.7		100	68
768	93.6	0.1	0.7		103	68
769	93.7	0.1	0.8		136	68
770	93.8	0.3	2.1		124	68
771	93.6	0.1	0.7		121	68
772	93.7	0.1	0.6		118	68
773	93.5	0.1	0.5		115	68
774	93.6	0.0	0.5		114	68
775	93.5	0.0	0.5		112	68
776	93.5	0.0	0.4		110	68
777	93.6	0.0	0.4		109	68

778	93.4	0.0	0.4		109	68
779	93.6	0.0	0.5		107	68
780	93.6	0.0	0.5		107	68
781	93.6	0.0	0.4		106	68
782	93.6	0.0	0.4		105	68
783	93.7	0.1	0.5		105	68
784	93.6	0.1	0.5		104	68
785	93.6	0.1	0.5		104	68
786	93.6	0.1	0.5		103	68
787	93.6	0.1	0.5		101	68
788	93.7	0.1	0.5		101	67
789	93.6	0.1	0.5		101	68
790	93.6	0.1	0.5		101	67
791	93.5	0.1	0.5		101	67
792	93.7	0.1	0.5		99	67
793	93.5	0.1	0.5		100	67
794	93.6	0.1	0.5		99	67
795	93.7	0.1	0.5		98	67
796	93.6	0.1	0.5		98	67
797	93.7	0.1	0.6		97	67
798	93.6	0.1	0.5		97	67
799	93.5	0.1	0.6		97	67
800	93.6	0.1	0.6		132	67
801	93.7	0.2	1.8		119	67
802	93.5	0.1	0.7		115	67
803	93.7	0.1	0.7		113	67
804	93.7	0.1	0.6		111	67
805	93.3	0.1	0.6		109	67
806	93.6	0.1	0.5		108	67
807	93.5	0.1	0.5		110	67
808	93.6	0.1	0.7		116	67
809	93.4	0.1	0.7		118	67
810	93.2	0.1	0.8		132	67
811	93.2	0.1	0.8		142	67
812	93.2	0.1	1.0		148	67
813	93.0	0.2	1.4		154	67
814	92.9	0.6	2.0		160	67
815	92.8	0.9	2.9		165	67
816	92.5	1.3	4.2		170	67
817	92.3	1.6	5.3		176	67
818	92.0	1.7	6.2		182	67
819	91.5	1.8	7.5		191	67

820	91.0	2.0	8.5		200	67
821	90.4	2.4	9.9		209	67
822	89.9	2.8	11.6		218	67
823	89.3	2.8	12.5		225	67
824	88.8	3.0	13.1		232	67
825	87.8	3.3	13.9		240	67
826	87.4	3.2	14.7		247	67
827	86.6	3.5	15.2		263	67
828	85.7	1.2	18.3		283	67
829	84.9	0.6	18.9		300	67
830	83.9	0.5	18.3		312	67
831	83.0	0.4	18.3		321	67
832	82.1	0.2	18.7		327	67
833	81.2	0.3	18.1		332	67
834	80.4	0.3	17.8		337	67
835	79.4	0.3	18.6		343	67
836	78.4	0.3	18.7		345	67
837	77.8	0.3	18.3		329	67
838	77.3	1.8	12.7		289	67
839	77.0	4.4	8.1		267	67
840	76.8	3.3	6.7		251	67
841	76.5	2.5	5.8		241	67
842	76.6	1.8	4.8		233	67
843	76.5	1.9	5.2		227	67
844	76.5	1.7	4.9		221	67
845	76.3	1.5	4.6		216	67
846	76.1	1.3	4.3		211	67
847	76.2	1.2	4.2		207	67
848	76.1	1.2	4.2		203	67
849	76.2	1.1	4.1		200	67
850	76.0	1.1	3.9		197	66
851	76.1	1.0	3.8		194	66
852	76.1	0.9	3.6		191	66
853	76.0	0.8	3.5		188	66
854	76.1	0.7	2.9		184	66
855	76.0	0.6	2.6		181	67
856	76.1	0.6	2.5		178	66
857	75.9	0.7	2.9		175	67
858	75.8	0.5	2.4		172	66
859	76.0	0.4	1.7		169	66
860	75.9	1.0	4.3		166	66
861	76.0	0.9	4.1		164	66

862	76.0	0.9	3.8		161	66
863	76.0	0.9	4.0		159	67
864	75.9	0.9	4.0		156	66
865	76.0	0.9	3.8		154	66
866	76.1	1.0	4.3		152	66
867	76.0	0.9	4.1		150	66
868	76.0	1.0	4.4		148	66
869	76.0	1.0	4.4		146	66
870	76.1	0.9	4.1		144	66
871	76.1	0.9	4.1		143	66
872	76.0	1.0	4.5		141	66
873	76.0	1.0	4.3		140	66
874	76.0	1.0	4.3		138	66
875	76.2	1.0	4.4		136	66
876	76.2	1.0	4.2		134	66
877	76.2	0.9	4.1		134	66
878	76.2	1.0	4.5		133	66
879	76.2	1.0	4.4		131	66
880	76.1	1.0	4.5		129	66
881	76.1	0.9	4.1		128	66
882	76.2	1.0	4.4		127	66
883	76.2	1.0	4.4		125	66
884	76.3	1.1	4.6		125	66
885	76.2	1.0	4.5		123	66
886	76.2	1.0	4.5		124	66
887	76.3	1.0	4.4		122	66
888	76.2	1.0	4.2		121	66
889	76.2	1.0	4.4		120	66
890	76.3	1.0	4.4		119	66
891	76.3	1.0	4.4		136	66
892	76.1	1.7	7.6		145	66
893	76.0	0.4	2.2		139	66
894	76.1	0.4	1.8		135	66
895	76.1	0.4	1.9		131	66
896	76.0	0.4	2.0		129	66
897	76.1	0.4	2.1		128	66
898	76.1	0.4	1.9		126	66
899	75.9	0.4	1.9		124	66
900	76.2	0.3	1.8		123	66
901	76.0	0.3	1.7		122	66
902	76.0	0.3	1.7		121	67
903	76.0	0.3	1.8		121	65

904	76.0	0.3	1.8		119	65
905	76.1	0.3	1.6		119	66
906	76.1	0.3	1.7		117	65
907	76.2	0.3	1.7		116	65
908	76.2	0.3	1.7		116	65
909	76.2	0.3	1.8		116	65
910	76.2	0.3	1.7		115	65
911	76.2	0.3	1.7		113	66
912	76.2	0.3	1.8		112	66
913	76.2	0.3	1.8		113	66
914	76.1	0.3	1.8		111	66
915	76.2	0.3	1.7		112	66
916	76.2	0.3	1.9		109	66
917	76.2	0.3	1.7		108	66
918	76.1	0.3	1.8		110	66
919	76.3	0.3	1.8		109	67
920	76.2	0.3	1.9		107	67
921	76.1	0.3	1.7		110	67
922	76.2	0.3	1.9		141	67
923	76.1	0.6	3.8		131	67
924	76.2	0.1	0.9		126	67
925	76.1	0.1	0.8		124	67
926	76.1	0.1	0.8		122	67
927	76.1	0.1	0.8		119	67
928	76.2	0.1	0.7		118	67
929	76.1	0.1	0.8		116	67
930	76.1	0.1	0.7		114	67
931	76.2	0.1	0.8		114	67
932	76.2	0.1	0.8		112	67
933	76.2	0.1	0.8		111	68
934	76.1	0.1	0.7		111	68
935	76.1	0.1	0.8		110	68
936	76.1	0.1	0.8		109	68
937	76.1	0.1	0.8		109	68
938	76.2	0.1	0.8		108	68
939	76.2	0.1	0.9		108	68
940	76.0	0.1	0.9		107	68
941	76.1	0.1	0.9		108	68
942	76.1	0.1	1.0		106	68
943	76.2	0.1	0.9		106	68
944	76.2	0.1	0.9		106	68
945	76.1	0.1	1.0		105	68

946	76.1	0.1	1.0		105	68
947	76.2	0.1	1.0		104	68
948	76.1	0.1	1.0		104	68
949	76.1	0.1	1.0		104	69
950	76.1	0.1	1.0		103	68
951	76.3	0.1	1.0		103	68
952	76.2	0.1	1.1		103	68
953	76.1	0.1	1.0		138	68
954	76.0	0.3	2.2		124	68
955	76.2	0.1	0.7		120	68
956	76.0	0.1	0.6		117	68
957	76.0	0.1	0.6		116	68
958	76.0	0.1	0.5		114	68
959	76.2	0.1	0.5		113	68
960	76.1	0.1	0.5		111	68
961	76.0	0.1	0.5		111	68
962	76.1	0.1	0.5		109	68
963	76.0	0.1	0.5		108	69
964	76.0	0.1	0.5		108	68
965	76.1	0.1	0.5		105	68
966	76.0	0.1	0.5		105	69
967	76.1	0.1	0.5		105	69
968	76.1	0.1	0.6		105	69
969	75.9	0.1	0.6		104	69
970	76.1	0.1	0.6		103	69
971	76.2	0.1	0.6		103	69
972	76.2	0.1	0.7		102	69
973	76.0	0.1	0.6		101	69
974	76.0	0.1	0.6		101	69
975	76.1	0.1	0.7		100	69
976	76.0	0.1	0.7		100	69
977	76.0	0.1	0.7		100	69
978	76.1	0.1	0.7		99	69
979	76.1	0.1	0.7		99	69
980	76.0	0.1	0.7		99	69
981	76.1	0.1	0.7		100	69
982	76.0	0.1	0.7		98	69
983	76.1	0.1	0.7		99	69
984	76.1	0.1	0.7		130	69
985	76.0	0.1	1.4		118	69
986	76.0	0.1	0.6		115	69
987	76.1	0.1	0.6		113	69

988	75.9	0.1	0.5		110	69
989	76.0	0.0	0.5		109	69
990	75.9	0.0	0.4		108	69
991	75.8	0.0	0.4		107	69
992	75.9	0.0	0.4		106	69
993	75.9	0.0	0.4		105	69
994	75.9	0.0	0.4		104	69
995	76.0	0.0	0.4		103	69
996	75.9	0.0	0.4		103	69
997	75.9	0.0	0.4		101	69
998	75.9	0.0	0.4		101	69
999	76.0	0.0	0.4		100	69
1000	75.8	0.0	0.4		100	69
1001	76.0	0.1	0.5		100	69
1002	75.9	0.1	0.5		99	70
1003	76.1	0.1	0.5		123	69
1004	76.0	0.1	1.0		114	69
1005	75.8	0.0	0.5		117	69
1006	75.6	0.1	0.5		129	69
1007	75.4	0.1	0.6		138	69
1008	75.4	0.1	0.8		145	69
1009	75.4	0.2	1.2		151	70
1010	75.1	0.4	1.6		156	70
1011	75.2	0.6	2.4		161	70
1012	74.8	0.8	3.4		166	70
1013	74.6	1.1	4.4		170	70
1014	74.4	1.2	5.1		174	70
1015	74.3	1.2	5.7		177	70
1016	74.0	1.2	5.9		182	70
1017	73.4	1.2	6.1		189	70
1018	73.3	1.2	6.2		196	70
1019	72.8	1.2	6.5		202	70
1020	72.3	1.3	6.9		208	70
1021	72.0	1.4	7.5		214	70
1022	71.5	1.5	8.1		219	70
1023	71.0	1.6	8.7		225	70
1024	70.4	1.7	9.5		233	70
1025	69.7	1.8	10.2		243	70
1026	69.3	1.8	10.9		254	70
1027	68.5	1.9	11.4		267	70
1028	67.9	1.3	15.6		278	70
1029	67.1	1.2	15.9		286	70

1030	66.4	1.0	15.8		293	70
1031	65.4	0.9	15.9		299	70
1032	64.7	0.8	16.3		306	70
1033	64.1	0.8	16.4		310	70
1034	63.2	0.6	16.7		315	70
1035	62.6	0.5	16.7		319	70
1036	62.0	0.4	16.6		322	70
1037	61.1	0.3	16.8		317	70
1038	60.7	0.4	16.8		282	70
1039	60.5	0.3	16.4		262	69
1040	60.4	0.7	16.6		248	69
1041	60.0	1.0	18.0		238	70
1042	60.0	0.5	16.6		232	70
1043	59.8	0.3	14.2		225	70
1044	59.7	0.3	13.4		219	70
1045	59.6	0.3	13.6		214	70
1046	59.6	0.3	11.9		210	70
1047	59.4	0.5	9.8		206	70
1048	59.4	0.6	8.3		202	70
1049	59.5	0.6	7.4		199	70
1050	59.3	0.6	6.6		196	70
1051	59.2	0.6	6.0		193	70
1052	59.3	0.6	5.6		190	70
1053	59.2	0.6	5.2		186	70
1054	59.1	0.5	4.3		183	70
1055	59.2	0.5	3.9		180	70
1056	59.2	0.7	4.3		177	70
1057	59.1	1.2	5.4		175	69
1058	59.1	1.6	6.5		172	69
1059	59.1	1.9	7.1		169	69
1060	59.1	2.2	8.0		167	69
1061	59.1	2.5	8.5		164	69
1062	59.1	2.9	9.5		162	69
1063	59.1	3.0	9.7		160	69
1064	59.2	3.2	10.2		158	69
1065	59.1	3.3	10.5		156	69
1066	59.0	3.4	10.8		155	69
1067	59.0	3.5	11.0		152	69
1068	59.0	3.7	11.4		150	69
1069	59.1	3.6	11.3		148	69
1070	59.1	3.7	11.3		147	69
1071	59.1	3.6	11.2		146	69

1072	59.0	3.7	11.4		145	69
1073	59.0	3.7	11.5		143	69
1074	59.2	3.7	11.5		143	69
1075	59.0	3.6	11.3		141	69
1076	59.0	3.8	11.7		141	69
1077	59.1	3.7	11.4		140	69
1078	59.0	3.7	11.5		138	69
1079	59.2	3.7	11.6		137	69
1080	59.0	3.6	11.3		137	68
1081	59.1	3.5	11.2		137	68
1082	59.2	3.6	11.3		135	69
1083	59.1	3.6	11.4		135	68
1084	59.0	3.5	11.1		134	68
1085	59.2	3.5	11.1		135	68
1086	59.0	3.4	10.9		133	68
1087	59.2	3.4	11.0		133	68
1088	59.2	3.4	10.8		133	68
1089	59.2	3.3	10.7		132	68
1090	59.2	3.3	10.6		132	68
1091	59.1	3.2	10.5		132	68
1092	59.0	3.3	10.6		144	68
1093	58.8	3.2	10.3		140	68
1094	59.1	1.5	6.1		135	68
1095	58.9	0.6	3.2		132	68
1096	58.8	0.5	2.8		131	68
1097	58.9	0.5	2.7		129	68
1098	59.0	0.6	2.7		128	68
1099	59.0	0.6	2.9		127	68
1100	58.9	0.7	3.0		126	68
1101	58.8	0.7	3.2		126	68
1102	58.9	0.7	3.2		126	68
1103	58.8	0.7	3.3		126	68
1104	58.9	0.7	3.3		126	68
1105	58.9	0.8	3.4		125	68
1106	59.1	0.8	3.4		124	68
1107	59.0	0.8	3.5		123	68
1108	59.0	0.8	3.4		125	68
1109	59.0	0.8	3.5		124	68
1110	59.0	0.8	3.5		123	68
1111	59.0	0.8	3.6		123	68
1112	59.0	0.7	3.5		121	68
1113	59.0	0.7	3.5		121	68

1114	58.8	0.8	3.6		121	68
1115	59.0	0.8	3.6		121	68
1116	58.9	0.8	3.7		121	68
1117	59.1	0.7	3.6		121	68
1118	59.1	0.8	3.7		121	68
1119	59.0	0.7	3.6		121	67
1120	59.2	0.7	3.6		120	67
1121	59.1	0.7	3.7		119	68
1122	59.3	0.7	3.6		121	68
1123	59.0	0.7	3.6		133	67
1124	59.1	0.7	3.7		129	68
1125	58.9	0.3	2.0		126	68
1126	59.1	0.2	1.3		123	68
1127	59.1	0.1	1.1		121	68
1128	59.1	0.1	1.0		120	68
1129	59.0	0.1	1.0		119	68
1130	59.2	0.2	1.0		117	68
1131	59.1	0.2	1.1		117	68
1132	59.0	0.2	1.1		116	68
1133	59.0	0.2	1.2		116	68
1134	59.0	0.2	1.2		115	68
1135	59.1	0.2	1.4		114	68
1136	59.1	0.2	1.4		114	68
1137	59.1	0.2	1.5		113	68
1138	59.1	0.2	1.5		113	68
1139	59.1	0.2	1.5		111	68
1140	59.2	0.2	1.6		113	68
1141	59.2	0.2	1.6		112	67
1142	59.2	0.3	1.7		112	68
1143	59.1	0.3	1.7		112	68
1144	59.3	0.3	1.8		112	68
1145	59.2	0.3	1.8		111	68
1146	59.1	0.3	1.8		110	67
1147	59.2	0.3	1.9		109	68
1148	59.2	0.3	1.9		109	68
1149	59.2	0.3	1.9		109	68
1150	59.2	0.3	1.9		110	68
1151	59.4	0.3	1.9		108	68
1152	59.2	0.3	2.0		108	68
1153	59.3	0.3	2.0		127	67
1154	59.1	0.3	2.0		124	67
1155	59.2	0.4	2.5		121	68

1156	59.2	0.1	1.2		118	68
1157	59.1	0.1	0.9		116	68
1158	59.2	0.1	0.8		114	68
1159	59.1	0.1	0.7		112	68
1160	59.1	0.1	0.7		112	67
1161	59.1	0.1	0.7		110	67
1162	59.3	0.1	0.7		110	67
1163	59.2	0.1	0.7		109	67
1164	59.2	0.1	0.7		108	67
1165	59.3	0.1	0.7		108	67
1166	59.4	0.1	0.8		107	67
1167	59.2	0.1	0.8		107	67
1168	59.2	0.1	0.9		106	67
1169	59.3	0.1	0.9		106	67
1170	59.3	0.1	1.0		106	67
1171	59.2	0.1	1.0		104	67
1172	59.2	0.1	1.1		104	67
1173	59.4	0.1	1.1		104	67
1174	59.5	0.1	1.2		104	67
1175	59.2	0.2	1.2		103	67
1176	59.3	0.2	1.2		103	67
1177	59.3	0.2	1.3		103	67
1178	59.2	0.2	1.3		103	67
1179	59.3	0.2	1.3		102	67
1180	59.3	0.2	1.4		102	67
1181	59.5	0.2	1.4		102	67
1182	59.4	0.2	1.5		103	67
1183	59.3	0.2	1.5		102	67
1184	59.4	0.2	1.5		125	67
1185	59.2	0.2	1.5		117	67
1186	59.1	0.2	2.0		113	67
1187	59.2	0.1	1.0		111	67
1188	59.2	0.1	0.9		109	67
1189	59.2	0.1	0.8		108	67
1190	59.4	0.1	0.7		107	67
1191	59.1	0.1	0.7		106	67
1192	59.2	0.1	0.7		105	68
1193	59.3	0.1	0.7		104	67
1194	59.4	0.1	0.6		103	67
1195	59.5	0.1	0.6		103	67
1196	59.3	0.1	0.7		102	67
1197	59.2	0.1	0.7		102	67

1198	59.1	0.1	0.7		101	67
1199	59.3	0.1	0.7		101	67
1200	59.3	0.1	0.8		100	67
1201	59.3	0.1	0.8		99	67
1202	59.2	0.1	0.9		114	67
1203	59.2	0.1	1.1		117	67
1204	59.1	0.3	1.5		132	67
1205	59.1	0.4	1.5		145	67
1206	58.8	0.6	1.9		155	67
1207	58.7	0.9	2.8		165	67
1208	58.2	1.0	3.6		176	67
1209	57.9	1.2	4.6		186	67
1210	57.9	1.3	5.4		196	67
1211	57.4	1.4	6.1		206	67
1212	57.0	1.6	7.2		217	67
1213	56.7	1.7	8.5		227	67
1214	56.2	1.9	9.4		238	67
1215	55.8	1.8	10.9		250	67
1216	55.1	1.4	12.4		261	67
1217	54.6	0.9	14.0		272	67
1218	53.9	0.5	14.5		281	67
1219	53.3	0.2	14.9		291	67
1220	52.7	0.2	15.6		299	68
1221	52.1	0.2	16.5		305	67
1222	51.5	0.2	16.9		311	67
1223	50.9	0.2	17.4		315	67
1224	50.2	0.2	17.1		318	67
1225	49.7	0.2	16.9		320	67
1226	49.1	0.1	16.7		323	67
1227	48.3	0.1	16.4		325	67
1228	47.5	0.1	16.3		327	67
1229	47.0	0.1	16.2		329	67
1230	46.6	0.1	16.3		332	67
1231	45.8	0.1	16.3		322	67
1232	45.4	0.1	16.1		288	67
1233	45.5	0.1	16.1		268	67
1234	45.2	0.1	15.7		254	67
1235	44.9	0.2	15.4		244	67
1236	44.8	0.2	16.2		237	67
1237	44.7	0.2	15.1		231	67
1238	44.5	0.1	13.4		224	67
1239	44.6	0.2	12.7		219	67

1240	44.4	0.2	12.6		215	67
1241	44.4	0.2	11.5		211	67
1242	44.5	0.2	10.1		207	67
1243	44.3	0.3	9.1		203	67
1244	44.3	0.4	8.2		200	67
1245	44.3	0.4	7.5		197	67
1246	44.3	0.5	6.9		194	67
1247	44.3	0.5	6.5		190	67
1248	44.3	0.5	6.0		186	67
1249	44.3	0.5	5.1		183	67
1250	44.3	0.4	4.5		180	67
1251	44.2	0.5	4.3		177	67
1252	44.2	0.5	4.4		174	67
1253	44.4	0.7	4.8		171	67
1254	44.3	0.9	5.3		168	68
1255	44.2	1.0	5.8		166	68
1256	44.3	1.2	6.3		163	68
1257	44.2	1.3	6.8		161	68
1258	44.2	1.4	7.2		158	68
1259	44.1	1.5	7.3		156	67
1260	44.4	1.6	7.6		154	68
1261	44.3	1.7	8.0		152	68
1262	44.2	1.8	8.2		150	68
1263	44.3	1.8	8.3		148	67
1264	44.2	1.9	8.6		146	67
1265	44.5	2.0	9.0		145	67
1266	44.1	2.0	9.1		143	67
1267	44.5	2.1	9.3		142	67
1268	44.1	2.2	9.5		140	68
1269	44.4	1.5	7.0		139	67
1270	44.2	1.9	8.3		135	67
1271	44.3	1.5	6.7		133	67
1272	44.2	1.4	6.3		132	67
1273	44.2	1.5	6.6		131	67
1274	44.3	1.6	6.8		130	67
1275	44.3	1.6	6.9		129	67
1276	44.3	1.5	6.5		128	67
1277	44.4	1.5	6.6		126	67
1278	44.3	1.5	6.4		125	67
1279	44.4	1.4	6.0		126	67
1280	44.5	1.5	6.2		125	67
1281	44.4	1.4	6.2		123	67

1282	44.5	1.4	6.0		123	68
1283	44.4	1.5	6.2		121	68
1284	44.6	1.5	6.3		123	68
1285	44.5	1.6	6.5		123	67
1286	44.3	2.6	10.2		146	67
1287	44.3	0.5	2.6		138	67
1288	44.3	0.5	2.3		133	67
1289	44.4	0.5	2.3		129	67
1290	44.3	0.5	2.4		127	68
1291	44.2	0.5	2.5		125	68
1292	44.2	0.5	2.5		123	68
1293	44.4	0.5	2.4		122	68
1294	44.2	0.5	2.2		121	68
1295	44.3	0.5	2.3		119	68
1296	44.3	0.4	2.1		117	67
1297	44.2	0.4	2.1		116	67
1298	44.3	0.4	2.3		117	67
1299	44.4	0.5	2.4		116	67
1300	44.2	0.4	2.3		114	67
1301	44.3	0.4	2.3		114	67
1302	44.4	0.4	2.3		113	67
1303	44.3	0.4	2.4		111	67
1304	44.3	0.4	2.3		111	67
1305	44.5	0.4	2.4		110	67
1306	44.6	0.5	2.5		108	67
1307	44.4	0.4	2.3		109	67
1308	44.3	0.4	2.2		109	67
1309	44.4	0.4	2.3		110	68
1310	44.3	0.5	2.5		107	67
1311	44.4	0.4	2.3		108	67
1312	44.4	0.4	2.3		106	67
1313	44.4	0.4	2.2		105	67
1314	44.5	0.3	2.0		104	67
1315	44.4	0.4	2.1		106	68
1316	44.4	0.4	2.2		125	68
1317	44.4	0.8	4.4		128	68
1318	44.5	0.2	1.2		124	68
1319	44.4	0.2	1.0		121	68
1320	44.5	0.2	0.9		118	68
1321	44.2	0.2	0.9		117	68
1322	44.5	0.1	0.8		115	68
1323	44.4	0.1	0.8		114	68

1324	44.4	0.1	0.8		112	68
1325	44.5	0.1	0.7		111	68
1326	44.5	0.1	0.8		109	68
1327	44.3	0.1	0.8		109	68
1328	44.4	0.2	0.9		108	68
1329	44.5	0.1	0.9		107	68
1330	44.5	0.1	0.9		107	68
1331	44.6	0.1	0.9		106	68
1332	44.4	0.1	0.9		105	68
1333	44.5	0.2	1.0		105	68
1334	44.5	0.2	1.0		103	68
1335	44.6	0.2	1.0		104	69
1336	44.4	0.2	1.1		103	69
1337	44.4	0.2	1.0		102	68
1338	44.4	0.2	1.0		103	68
1339	44.3	0.2	1.2		102	68
1340	44.5	0.2	1.1		102	68
1341	44.3	0.2	1.2		100	68
1342	44.5	0.2	1.0		101	68
1343	44.4	0.2	1.1		101	68
1344	44.4	0.2	1.1		99	68
1345	44.4	0.2	1.1		99	68
1346	44.5	0.2	1.1		99	67
1347	44.3	0.2	1.1		127	67
1348	44.6	0.3	2.2		119	67
1349	44.6	0.1	0.8		115	68
1350	44.5	0.1	0.7		113	68
1351	44.6	0.1	0.6		110	68
1352	44.4	0.1	0.5		109	68
1353	44.4	0.1	0.5		107	68
1354	44.5	0.1	0.4		106	68
1355	44.5	0.1	0.4		105	68
1356	44.4	0.1	0.4		104	68
1357	44.6	0.1	0.4		103	68
1358	44.5	0.1	0.4		102	68
1359	44.6	0.1	0.4		102	68
1360	44.5	0.1	0.4		100	68
1361	44.5	0.1	0.4		100	68
1362	44.6	0.1	0.5		99	68
1363	44.7	0.1	0.5		99	68
1364	44.3	0.1	0.5		98	68
1365	44.6	0.1	0.5		97	68

1366	44.5	0.1	0.5		98	68
1367	44.5	0.1	0.5		97	68
1368	44.6	0.1	0.5		97	68
1369	44.6	0.1	0.5		96	68
1370	44.4	0.1	0.5		95	69
1371	44.6	0.1	0.5		96	69
1372	44.6	0.1	0.5		95	69
1373	44.5	0.1	0.6		95	69
1374	44.7	0.1	0.5		93	69
1375	44.6	0.1	0.6		94	69
1376	44.6	0.1	0.6		93	69
1377	44.7	0.1	0.5		93	69
1378	44.5	0.1	0.6		120	68
1379	44.6	0.2	1.3		111	69
1380	44.5	0.1	0.6		108	69
1381	44.5	0.1	0.5		106	69
1382	44.5	0.1	0.5		104	69
1383	44.6	0.1	0.4		102	69
1384	44.6	0.0	0.4		101	69
1385	44.5	0.0	0.4		100	69
1386	44.6	0.0	0.3		99	69
1387	44.5	0.0	0.3		99	69
1388	44.6	0.0	0.3		97	69
1389	44.5	0.0	0.3		97	69
1390	44.5	0.0	0.3		97	69
1391	44.6	0.0	0.3		96	69
1392	44.5	0.0	0.3		96	69
1393	44.6	0.0	0.3		95	69
1394	44.7	0.0	0.4		94	69
1395	44.5	0.0	0.4		94	69
1396	44.5	0.0	0.4		93	69
1397	44.6	0.0	0.4		92	70
1398	44.6	0.0	0.4		93	69
1399	44.5	0.1	0.4		91	69
1400	44.7	0.1	0.4		93	69
1401	44.5	0.1	0.5		92	69
1402	44.6	0.1	0.5		91	69
1403	44.7	0.1	0.5		92	69
1404	44.7	0.1	0.5		91	69
1405	44.7	0.1	0.6		90	69
1406	44.7	0.1	0.6		90	69
1407	44.7	0.1	0.6		90	69

1408	44.6	0.1	0.6		89	69
1409	44.6	0.1	0.7		113	69
1410	44.6	0.2	1.8		105	69
1411	44.5	0.1	1.1		110	69
1412	44.5	0.1	1.2		124	69
1413	44.4	0.2	1.1		142	69
1414	44.3	0.3	1.3		151	69
1415	44.3	0.4	1.6		157	69
1416	44.3	0.6	2.2		164	69
1417	43.9	0.8	2.8		170	69
1418	43.9	0.2	0.9		176	69
1419	43.6	1.3	5.3		183	69
1420	43.5	1.7	6.5		193	69
1421	43.2	1.9	7.6		202	69
1422	42.9	1.9	8.9		211	69
1423	42.4	1.9	10.3		218	69
1424	42.3	1.7	11.3		226	69
1425	41.8	1.3	13.1		234	69
1426	41.3	1.2	13.9		243	69
1427	41.0	0.8	14.6		251	69
1428	40.4	0.5	14.8		260	69
1429	40.1	0.2	16.5		270	69
1430	39.6	0.2	17.3		279	69
1431	38.9	0.1	17.1		287	69
1432	38.4	0.1	17.1		292	69
1433	37.9	0.1	16.8		297	69
1434	37.3	0.1	16.5		302	69
1435	36.9	0.1	16.4		306	69
1436	36.1	0.1	16.6		312	69
1437	35.5	0.2	18.9		321	68
1438	35.0	0.2	19.0		327	68
1439	34.3	0.2	19.0		332	68
1440	33.5	0.1	18.9		337	68
1441	32.7	0.2	18.9		342	68
1442	32.0	0.2	18.9		344	68
1443	31.8	0.1	18.3		306	68
1444	31.4	0.2	18.2		280	68
1445	31.3	0.2	16.9		264	68
1446	31.1	0.1	14.6		251	68
1447	31.0	0.1	12.2		244	68
1448	30.8	0.1	13.5		237	68
1449	30.8	0.1	12.5		230	67

1450	30.6	0.1	10.9		225	68
1451	30.6	0.1	9.6		220	68
1452	30.5	0.2	8.8		215	68
1453	30.5	0.2	7.8		211	68
1454	30.4	0.2	6.9		208	68
1455	30.4	0.3	6.1		204	68
1456	30.2	0.3	5.6		201	68
1457	30.4	0.3	5.1		197	68
1458	30.4	0.2	4.0		194	68
1459	30.2	0.3	3.8		190	68
1460	30.4	0.5	4.8		187	68
1461	30.3	0.8	5.5		184	68
1462	30.4	1.2	6.7		181	68
1463	30.3	1.5	7.7		177	68
1464	30.3	1.6	7.8		175	68
1465	30.2	1.8	8.1		172	68
1466	30.4	1.9	8.3		169	68
1467	30.3	2.0	8.3		167	68
1468	30.2	2.1	8.5		164	68
1469	30.2	2.0	8.2		162	68
1470	30.4	2.0	8.1		159	68
1471	30.3	2.1	8.0		158	68
1472	30.4	2.1	8.1		155	68
1473	30.4	2.2	8.2		153	68
1474	30.3	2.1	7.9		152	68
1475	30.3	2.2	8.3		150	68
1476	30.3	2.1	7.8		147	68
1477	30.4	2.0	7.5		145	68
1478	30.4	2.0	7.4		144	68
1479	30.5	2.0	7.5		142	68
1480	30.4	2.0	7.4		140	68
1481	30.3	2.2	7.9		139	68
1482	30.3	2.1	7.6		138	68
1483	30.0	1.9	7.2		136	68
1484	30.2	2.1	7.5		134	68
1485	30.3	2.1	7.8		133	68
1486	30.3	2.1	7.6		132	68
1487	30.3	2.0	7.5		131	68
1488	30.3	2.0	7.3		130	68
1489	30.3	2.1	7.8		129	68
1490	30.3	2.1	7.5		127	68
1491	30.3	1.9	7.0		126	68

1492	30.5	2.0	7.4		126	68
1493	30.5	2.0	7.3		124	68
1494	30.3	1.9	7.1		124	68
1495	30.3	2.1	7.8		124	68
1496	30.4	2.0	7.2		121	68
1497	30.1	1.8	6.5		148	68
1498	30.3	1.4	5.8		144	68
1499	30.2	1.2	4.8		137	68
1500	30.3	1.1	4.5		133	68
1501	30.2	1.1	4.5		130	68
1502	30.3	1.1	4.7		128	68
1503	30.1	1.1	4.7		126	68
1504	30.1	1.0	4.3		125	68
1505	30.4	0.8	3.9		123	68
1506	30.3	0.8	3.7		121	68
1507	30.2	0.7	3.3		120	68
1508	30.3	0.7	3.1		119	68
1509	30.2	0.7	3.5		119	68
1510	30.3	0.7	3.3		117	68
1511	30.2	0.6	3.1		118	68
1512	30.4	0.7	3.4		115	68
1513	30.2	0.6	3.1		113	67
1514	30.3	0.7	3.4		114	67
1515	30.2	0.6	3.1		113	68
1516	30.3	0.6	3.1		111	68
1517	30.3	0.6	3.1		111	68
1518	30.3	0.6	3.1		110	68
1519	30.4	0.6	3.1		110	68
1520	30.2	0.6	3.2		108	68
1521	30.3	0.6	3.0		110	68
1522	30.4	0.6	3.3		109	68
1523	30.4	0.6	3.0		106	68
1524	30.2	0.6	3.0		106	68
1525	30.2	0.5	2.9		106	68
1526	30.4	0.6	3.1		108	68
1527	30.4	0.5	2.8		106	68
1528	30.2	0.5	3.0		131	68
1529	30.2	0.4	2.8		126	68
1530	30.3	0.4	2.4		122	68
1531	30.4	0.3	2.2		120	68
1532	30.3	0.3	2.0		117	68
1533	30.3	0.3	1.9		116	68

1534	30.3	0.3	1.8		114	68
1535	30.2	0.3	1.7		113	68
1536	30.3	0.2	1.6		113	68
1537	30.4	0.2	1.7		111	68
1538	30.3	0.2	1.6		109	68
1539	30.3	0.2	1.6		109	68
1540	30.5	0.2	1.7		108	68
1541	30.4	0.2	1.8		107	67
1542	30.3	0.2	1.8		107	67
1543	30.4	0.2	1.7		105	67
1544	30.3	0.2	1.8		106	67
1545	30.3	0.2	1.7		104	68
1546	30.4	0.2	1.9		104	68
1547	30.4	0.2	1.9		102	68
1548	30.5	0.2	1.9		102	67
1549	30.5	0.2	1.8		103	67
1550	30.4	0.3	2.0		103	67
1551	30.5	0.3	2.1		102	67
1552	30.4	0.2	1.9		102	67
1553	30.5	0.3	2.1		102	67
1554	30.4	0.2	2.0		100	67
1555	30.4	0.2	2.0		100	67
1556	30.4	0.2	2.0		100	67
1557	30.4	0.2	2.1		100	67
1558	30.3	0.2	2.0		99	67
1559	30.5	0.4	3.0		121	67
1560	30.3	0.2	2.2		116	67
1561	30.4	0.2	1.9		113	67
1562	30.5	0.2	1.8		112	67
1563	30.2	0.2	1.6		109	67
1564	30.3	0.1	1.4		108	67
1565	30.5	0.1	1.3		107	67
1566	30.4	0.1	1.2		105	67
1567	30.3	0.1	1.1		104	67
1568	30.5	0.1	1.1		104	67
1569	30.4	0.1	1.1		102	67
1570	30.3	0.1	1.0		101	67
1571	30.4	0.1	1.0		100	67
1572	30.3	0.1	1.1		99	67
1573	30.4	0.1	1.1		100	67
1574	30.4	0.1	1.2		98	67
1575	30.5	0.1	1.3		99	67

1576	30.3	0.1	1.2		98	67
1577	30.7	0.1	1.4		97	67
1578	30.3	0.1	1.4		96	67
1579	30.4	0.1	1.4		97	67
1580	30.5	0.1	1.4		95	67
1581	30.5	0.1	1.4		95	67
1582	30.4	0.2	1.5		95	67
1583	30.4	0.2	1.5		94	67
1584	30.5	0.2	1.7		95	67
1585	30.5	0.2	1.6		94	67
1586	30.4	0.2	1.8		94	67
1587	30.6	0.2	1.8		93	67
1588	30.4	0.2	1.8		92	67
1589	30.5	0.2	1.9		93	67
1590	30.3	0.4	4.4		113	67
1591	30.4	0.2	2.3		109	67
1592	30.5	0.2	2.1		106	67
1593	30.4	0.2	1.9		104	67
1594	30.7	0.2	1.7		102	67
1595	30.4	0.1	1.5		101	67
1596	30.4	0.1	1.4		101	67
1597	30.3	0.1	1.2		99	67
1598	30.5	0.1	1.2		99	67
1599	30.4	0.1	1.1		98	67
1600	30.4	0.1	1.0		97	67
1601	30.5	0.1	1.0		96	67
1602	30.4	0.1	0.9		95	67
1603	30.5	0.1	0.9		95	67
1604	30.5	0.1	0.9		95	67
1605	30.5	0.1	0.8		94	67
1606	30.5	0.1	0.8		93	67
1607	30.5	0.1	0.8		92	67
1608	30.5	0.1	0.8		92	67
1609	30.6	0.1	0.8		91	67
1610	30.7	0.1	0.8		91	67
1611	30.5	0.1	0.8		90	67
1612	30.5	0.1	0.7		89	67
1613	30.5	0.1	0.8		89	67
1614	30.4	0.1	0.8		89	67
1615	30.5	0.1	0.7		89	67
1616	30.6	0.1	0.7		88	67
1617	30.6	0.1	0.7		88	67

1618	30.6	0.1	0.7		88	67
1619	30.6	0.1	0.7		87	67
1620	30.6	0.1	0.7		91	67
1621	30.5	0.6	5.5		107	67
1622	30.5	0.2	2.3		102	67
1623	30.4	0.2	2.1		100	67
1624	30.5	0.2	1.9		98	67
1625	30.6	0.1	1.7		96	67
1626	30.6	0.1	1.5		96	67
1627	30.5	0.1	1.4		95	67
1628	30.5	0.1	1.3		94	67
1629	30.5	0.1	1.1		93	67
1630	30.6	0.1	1.0		92	67
1631	30.6	0.1	1.0		91	67
1632	30.6	0.1	1.0		91	67
1633	30.5	0.1	0.9		91	67
1634	30.5	0.1	0.9		90	67
1635	30.4	0.1	0.8		90	67
1636	30.6	0.1	0.8		89	67
1637	30.5	0.1	0.7		88	67
1638	30.5	0.1	0.7		88	67
1639	30.5	0.1	0.7		87	66
1640	30.5	0.1	0.7		87	67
1641	30.6	0.1	0.6		86	67
1642	30.5	0.1	0.6		86	67
1643	30.5	0.1	0.6		85	66
1644	30.6	0.1	0.6		86	67
1645	30.5	0.1	0.6		85	66
1646	30.6	0.1	0.5		85	66
1647	30.6	0.1	0.5		85	66
1648	30.6	0.1	0.5		85	66
1649	30.5	0.0	0.5		84	66
1650	30.6	0.0	0.5		84	66
1651	30.5	0.0	0.5		96	66
1652	30.6	0.5	5.2		102	66
1653	30.6	0.2	2.4		98	66
1654	30.4	0.2	2.3		95	66
1655	30.6	0.2	2.1		94	66
1656	30.5	0.2	1.8		93	66
1657	30.4	0.2	2.5		114	66
1658	30.3	1.0	2.9		143	66
1659	30.1	1.5	4.3		164	66

1660	29.9	2.2	6.9		186	66
1661	29.5	2.2	9.3		206	66
1662	28.9	2.4	11.6		222	66
1663	28.7	2.0	13.0		234	66
1664	28.3	1.8	13.1		244	66
1665	27.9	1.5	12.8		253	66
1666	27.5	1.3	13.6		261	66
1667	26.8	0.6	15.9		271	66
1668	26.3	0.3	16.8		282	66
1669	25.7	0.2	17.1		290	66
1670	25.1	0.2	16.8		296	66
1671	24.5	0.1	16.9		302	66
1672	23.8	0.1	17.1		309	66
1673	23.4	0.1	16.8		314	66
1674	22.6	0.1	17.0		318	66
1675	21.9	0.1	17.5		324	66
1676	21.2	0.1	17.5		329	66
1677	20.7	0.1	17.8		333	68
1678	19.9	0.1	17.6		334	66
1679	19.4	0.1	17.4		337	66
1680	18.7	0.1	17.3		340	66
1681	18.2	0.1	17.3		311	67
1682	17.9	0.2	17.7		283	67
1683	17.6	0.2	17.0		265	67
1684	17.6	0.1	14.8		253	68
1685	17.3	0.1	12.3		245	67
1686	17.1	0.1	12.7		238	67
1687	17.1	0.1	12.1		231	67
1688	17.2	0.1	10.5		225	67
1689	17.1	0.1	9.1		220	67
1690	17.0	0.2	8.3		216	67
1691	17.0	0.2	7.6		212	67
1692	16.9	0.2	6.9		208	67
1693	17.0	0.2	6.3		204	68
1694	16.7	0.2	5.8		201	68
1695	16.8	0.3	5.5		198	68
1696	16.8	0.2	4.2		194	68
1697	16.8	0.2	3.8		191	68
1698	16.7	0.4	4.1		187	68
1699	16.6	0.7	5.0		184	68
1700	16.8	1.0	5.7		181	68
1701	16.7	1.3	6.5		178	68

1702	16.7	1.4	6.9		175	68
1703	16.7	1.6	7.4		172	68
1704	16.7	1.8	7.7		169	68
1705	16.7	1.8	7.5		167	68
1706	16.5	1.8	7.4		164	68
1707	16.7	1.9	7.8		162	68
1708	16.5	1.9	7.6		160	68
1709	16.7	2.1	8.1		158	68
1710	16.7	1.9	7.6		155	68
1711	16.7	2.0	7.7		153	68
1712	16.6	2.0	7.6		151	69
1713	16.8	2.1	7.8		149	69
1714	16.7	2.1	7.8		147	69
1715	16.6	2.1	7.6		145	69
1716	16.7	1.9	7.1		144	69
1717	16.6	2.1	7.7		142	69
1718	16.6	1.9	7.0		141	69
1719	16.7	2.2	7.7		139	69
1720	16.7	1.9	7.0		138	69
1721	16.9	2.0	7.2		136	69
1722	16.6	2.1	7.5		135	70
1723	16.6	1.9	6.9		133	69
1724	16.8	2.1	7.5		131	69
1725	16.8	1.9	6.8		131	69
1726	16.8	1.8	6.3		129	69
1727	16.7	2.0	6.9		128	70
1728	16.6	1.9	6.6		127	69
1729	16.8	1.7	5.9		126	70
1730	16.6	1.9	6.7		124	69
1731	16.8	1.8	6.2		123	69
1732	16.8	1.7	6.0		122	70
1733	16.8	1.7	6.0		121	70
1734	16.9	2.0	6.8		120	70
1735	16.7	1.8	6.1		147	70
1736	16.6	1.4	5.1		146	70
1737	16.7	1.1	3.8		138	70
1738	16.7	1.0	3.6		133	70
1739	16.6	1.0	3.6		130	70
1740	16.5	1.0	3.7		127	70
1741	16.5	1.0	3.7		125	70
1742	16.6	0.9	3.5		124	70
1743	16.6	0.8	3.2		122	70

1744	16.5	0.7	3.0		121	70
1745	16.7	0.7	3.0		120	70
1746	16.6	0.6	2.7		119	70
1747	16.6	0.6	2.6		117	70
1748	16.5	0.6	2.7		116	70
1749	16.6	0.6	2.7		116	70
1750	16.6	0.6	2.8		114	70
1751	16.7	0.6	2.6		114	70
1752	16.7	0.6	2.8		112	70
1753	16.6	0.6	2.6		111	70
1754	16.6	0.6	2.7		111	70
1755	16.6	0.6	2.7		110	70
1756	16.7	0.6	2.6		110	70
1757	16.7	0.5	2.6		108	70
1758	16.7	0.6	2.7		108	70
1759	16.5	0.6	2.8		106	71
1760	16.8	0.5	2.5		104	70
1761	16.6	0.5	2.6		105	71
1762	16.7	0.5	2.5		106	71
1763	16.7	0.5	2.5		107	71
1764	16.7	0.5	2.5		104	71
1765	16.8	0.5	2.6		104	71
1766	16.7	0.5	2.4		133	71
1767	16.6	0.5	2.4		127	71
1768	16.6	0.4	1.8		123	71
1769	16.7	0.3	1.7		120	71
1770	16.6	0.3	1.5		118	71
1771	16.7	0.3	1.5		115	71
1772	16.6	0.3	1.4		114	70
1773	16.6	0.2	1.3		112	71
1774	16.6	0.2	1.2		111	71
1775	16.7	0.2	1.2		111	70
1776	16.6	0.2	1.2		109	70
1777	16.6	0.2	1.3		109	70
1778	16.7	0.2	1.2		107	70
1779	16.5	0.2	1.3		106	70
1780	16.7	0.2	1.3		106	70
1781	16.8	0.2	1.2		106	70
1782	16.7	0.2	1.3		104	70
1783	16.5	0.2	1.4		104	69
1784	16.6	0.2	1.4		103	69
1785	16.5	0.2	1.3		103	69

1786	16.6	0.2	1.4		101	69
1787	16.7	0.2	1.4		101	69
1788	16.7	0.2	1.4		102	69
1789	16.7	0.2	1.4		101	69
1790	16.6	0.2	1.5		100	69
1791	16.8	0.2	1.4		100	69
1792	16.6	0.2	1.5		98	69
1793	16.7	0.2	1.4		97	69
1794	16.5	0.2	1.5		98	69
1795	16.7	0.2	1.6		98	69
1796	16.6	0.2	1.5		98	69
1797	16.7	0.2	1.5		122	69
1798	16.8	0.2	1.6		116	69
1799	16.6	0.2	1.3		113	68
1800	16.6	0.2	1.2		110	69
1801	16.6	0.1	1.0		108	68
1802	16.7	0.1	0.9		107	68
1803	16.6	0.1	0.8		106	68
1804	16.7	0.1	0.8		105	68
1805	16.5	0.1	0.7		103	68
1806	16.7	0.1	0.7		102	68
1807	16.7	0.1	0.7		102	68
1808	16.7	0.1	0.7		101	68
1809	16.5	0.1	0.7		100	68
1810	16.7	0.1	0.7		98	68
1811	16.7	0.1	0.6		98	68
1812	16.7	0.1	0.7		98	68
1813	16.7	0.1	0.7		98	68
1814	16.7	0.1	0.7		97	68
1815	16.7	0.1	0.8		96	68
1816	16.8	0.1	0.8		96	68
1817	16.7	0.1	0.8		96	68
1818	16.7	0.1	0.8		94	68
1819	16.8	0.1	0.8		94	68
1820	16.8	0.1	0.9		94	68
1821	16.7	0.1	0.9		94	68
1822	16.7	0.1	0.9		93	68
1823	16.8	0.1	1.0		92	68
1824	16.7	0.1	0.9		92	68
1825	16.6	0.1	1.0		92	68
1826	16.8	0.1	1.0		91	68
1827	16.7	0.1	1.0		91	68

1828	16.7	0.1	1.2		114	68
1829	16.9	0.2	1.4		109	68
1830	16.8	0.1	1.3		105	68
1831	16.7	0.1	1.1		103	68
1832	16.7	0.1	1.0		101	68
1833	16.8	0.1	0.9		100	68
1834	16.9	0.1	0.8		99	68
1835	16.7	0.1	0.8		98	68
1836	16.8	0.1	0.7		97	68
1837	16.8	0.1	0.7		96	68
1838	16.8	0.1	0.6		95	68
1839	16.8	0.1	0.6		95	68
1840	16.8	0.1	0.6		94	68
1841	16.8	0.1	0.6		93	68
1842	16.9	0.1	0.6		93	68
1843	16.8	0.1	0.6		92	68
1844	16.8	0.1	0.6		92	67
1845	16.8	0.1	0.5		91	67
1846	16.9	0.1	0.6		91	67
1847	16.8	0.1	0.6		90	67
1848	16.8	0.1	0.6		90	67
1849	16.8	0.1	0.6		90	67
1850	16.9	0.1	0.6		89	67
1851	17.0	0.1	0.6		89	67
1852	16.8	0.1	0.6		88	67
1853	16.9	0.1	0.7		88	67
1854	16.9	0.1	0.7		88	67
1855	16.8	0.1	0.7		88	67
1856	16.8	0.1	0.7		87	67
1857	16.9	0.1	0.7		87	67
1858	16.9	0.1	0.7		86	67
1859	16.9	0.2	1.4		109	67
1860	16.9	0.1	1.5		103	67
1861	16.9	0.1	1.3		99	67
1862	17.0	0.1	1.2		97	67
1863	16.8	0.1	1.1		96	67
1864	16.8	0.1	1.0		95	67
1865	16.8	0.1	0.9		94	67
1866	16.9	0.1	0.8		93	67
1867	17.1	0.1	0.7		92	67
1868	16.9	0.1	0.7		92	67
1869	17.0	0.1	0.6		91	67

1870	16.9	0.1	0.6		90	67
1871	17.0	0.1	0.6		90	67
1872	16.8	0.1	0.6		89	67
1873	16.9	0.1	0.5		89	67
1874	17.0	0.1	0.6		88	67
1875	16.9	0.1	0.5		88	67
1876	16.9	0.1	0.5		87	67
1877	17.0	0.1	0.5		87	67
1878	16.9	0.0	0.0		87	67
1879	17.0	0.1	0.6		86	67
1880	16.9	0.1	0.6		86	67
1881	16.9	0.1	0.6		86	67
1882	17.0	0.1	0.6		86	67
1883	17.0	0.1	0.5		85	67
1884	17.0	0.1	0.6		85	67
1885	17.1	0.1	0.5		84	67
1886	17.0	0.1	0.5		84	67
1887	17.0	0.1	0.5		83	67
1888	17.0	0.1	0.6		83	67
1889	17.1	0.1	0.6		83	67
1890	17.0	0.3	2.5		106	67
1891	16.9	0.2	1.6		99	67
1892	16.9	0.1	1.5		95	67
1893	16.8	0.1	1.4		93	67
1894	16.9	0.1	1.2		92	67
1895	16.9	0.1	1.0		91	67
1896	16.9	0.1	1.0		90	67
1897	17.1	0.1	0.9		89	67
1898	17.0	0.1	0.8		89	67
1899	16.9	0.1	0.7		108	67
1900	16.9	0.2	1.5		133	67
1901	16.7	0.3	1.0		146	67
1902	16.8	0.5	1.3		155	67
1903	16.7	0.6	1.8		162	67
1904	16.6	0.7	2.4		168	67
1905	16.5	1.0	3.2		174	67
1906	16.2	1.1	4.6		182	67
1907	14.7	2.0	7.2		196	67
1908	15.6	2.4	8.5		198	66
1909	15.4	2.4	9.8		210	66
1910	14.8	1.6	18.1		224	66
1911	14.3	2.3	18.0		244	67

1912	13.9	0.4	18.6		267	67
1913	13.2	0.1	17.3		283	66
1914	12.6	0.1	17.4		294	67
1915	12.1	0.1	17.2		302	67
1916	11.6	0.1	17.2		308	66
1917	11.0	0.1	17.2		313	66
1918	10.3	0.1	17.4		318	66
1919	9.7	0.1	17.5		321	66
1920	9.2	0.1	17.5		326	66
1921	8.6	0.1	17.5		330	66
1922	8.0	0.1	17.2		330	66
1923	7.4	0.1	17.3		334	67
1924	7.0	0.1	17.6		337	66
1925	6.2	0.2	17.6		339	66
1926	5.8	0.2	17.6		342	66
1927	4.9	0.1	17.3		344	66
1928	4.8	0.1	16.9		309	66
1929	4.5	0.0	14.2		283	66
1930	4.4	0.0	13.0		266	66
1931	4.3	0.0	11.3		254	66
1932	4.0	0.1	9.7		246	66
1933	3.9	0.1	11.7		240	66
1934	3.9	0.1	11.3		233	66
1935	4.0	0.1	10.0		227	66
1936	3.7	0.1	8.9		222	66
1937	3.6	0.1	8.3		218	66
1938	3.7	0.1	7.8		214	66
1939	3.5	0.1	7.0		210	66
1940	3.5	0.1	6.3		206	66
1941	3.5	0.1	5.7		203	66
1942	3.5	0.1	4.8		199	66
1943	3.3	0.1	3.6		196	66
1944	3.6	0.2	3.5		192	66
1945	3.5	0.5	4.2		189	66
1946	3.4	0.8	4.9		185	66
1947	3.4	1.1	5.7		182	66
1948	3.5	1.5	6.6		179	66
1949	3.5	1.6	6.9		176	66
1950	3.4	1.7	6.9		173	66
1951	3.5	1.8	7.3		170	66
1952	3.4	1.9	7.2		167	66
1953	3.5	1.9	7.0		165	66

1954	3.5	1.9	7.0		162	67
1955	3.4	1.9	6.9		160	66
1956	3.4	1.7	6.1		157	66
1957	3.5	1.7	6.3		155	66
1958	3.5	1.7	6.3		153	66
1959	3.5	1.8	6.4		151	67
1960	3.5	1.8	6.3		149	67
1961	3.4	1.7	6.1		147	67
1962	3.5	1.6	5.7		145	67
1963	3.5	1.5	5.4		143	67
1964	3.5	1.7	5.9		141	67
1965	3.5	1.5	5.2		139	67
1966	3.4	1.6	5.5		137	67
1967	3.5	1.4	5.0		136	67
1968	3.5	1.3	4.6		134	67
1969	3.6	1.3	4.7		133	67
1970	3.6	1.3	4.6		131	67
1971	3.5	1.3	4.4		130	67
1972	3.5	1.2	4.3		128	67
1973	3.6	1.3	4.4		127	68
1974	3.7	1.2	4.0		126	68
1975	3.6	1.1	3.9		125	68
1976	3.6	1.2	3.9		123	68
1977	3.5	1.0	3.5		122	68
1978	3.7	1.1	3.7		120	68
1979	3.6	1.1	3.6		119	68
1980	3.6	1.1	3.5		118	68
1981	3.7	1.0	3.4		118	68
1982	3.6	1.0	3.4		152	68
1983	3.5	1.6	6.0		148	68
1984	3.6	1.3	5.0		138	68
1985	3.5	1.2	4.7		132	68
1986	3.5	1.2	4.7		128	68
1987	3.4	1.2	4.7		126	68
1988	3.5	1.1	4.5		123	68
1989	3.5	1.0	4.1		122	69
1990	3.6	0.8	3.5		119	69
1991	3.4	0.8	3.3		118	69
1992	3.5	0.7	2.8		116	69
1993	3.5	0.6	2.6		115	69
1994	3.6	0.6	2.6		114	69
1995	3.5	0.6	2.6		112	69

1996	3.6	0.6	2.5		112	69
1997	3.5	0.6	2.5		110	69
1998	3.4	0.5	2.3		109	69
1999	3.5	0.5	2.3		109	69
2000	3.6	0.5	2.3		107	69
2001	3.5	0.5	2.2		106	69
2002	3.5	0.5	2.1		106	69
2003	3.5	0.5	2.0		105	69
2004	3.6	0.5	2.1		104	69
2005	3.6	0.5	2.0		104	69
2006	3.6	0.5	2.1		103	69
2007	3.5	0.4	1.9		103	69
2008	3.7	0.4	1.9		103	69
2009	3.7	0.4	1.8		102	69
2010	3.7	0.4	1.9		102	69
2011	3.6	0.4	1.8		101	69
2012	3.7	0.4	1.7		100	69
2013	3.7	0.5	2.0		134	69
2014	3.8	0.5	2.6		129	69
2015	3.8	0.4	2.2		123	70
2016	3.6	0.4	2.0		119	69
2017	3.6	0.3	1.8		116	69
2018	3.8	0.3	1.6		113	69
2019	3.7	0.2	1.4		110	69
2020	3.8	0.2	1.3		109	70
2021	3.9	0.2	1.2		108	70
2022	3.8	0.2	1.0		106	70
2023	3.9	0.2	1.0		105	70
2024	4.0	0.2	1.0		104	70
2025	3.6	0.2	1.0		103	70
2026	3.7	0.2	0.9		103	70
2027	3.9	0.2	1.0		102	70
2028	3.7	0.2	0.9		101	70
2029	3.8	0.2	0.9		100	70
2030	3.9	0.2	0.9		99	70
2031	3.9	0.2	0.9		99	70
2032	3.8	0.1	0.9		99	70
2033	3.9	0.1	0.9		97	70
2034	3.8	0.1	0.9		97	70
2035	3.8	0.2	0.9		96	70
2036	3.8	0.2	1.0		95	70
2037	3.8	0.1	0.9		95	70

2038	3.9	0.1	0.9		94	70
2039	3.9	0.1	0.9		93	70
2040	4.0	0.2	1.0		93	70
2041	3.8	0.1	0.9		92	70
2042	3.9	0.1	0.9		91	70
2043	3.9	0.1	0.9		91	70
2044	3.8	0.3	2.1		120	70
2045	3.9	0.3	2.2		113	70
2046	3.9	0.3	2.0		109	69
2047	3.8	0.2	1.8		107	69
2048	3.7	0.2	1.6		104	69
2049	3.9	0.2	1.4		103	69
2050	3.8	0.2	1.2		101	69
2051	3.8	0.2	1.2		100	69
2052	3.7	0.1	1.0		99	70
2053	3.8	0.1	0.9		98	70
2054	3.8	0.1	0.9		97	70
2055	3.8	0.1	0.9		96	70
2056	3.9	0.1	0.8		95	70
2057	3.7	0.1	0.7		95	70
2058	4.0	0.1	0.8		94	70
2059	3.8	0.1	0.7		93	70
2060	3.9	0.1	0.7		93	69
2061	3.8	0.1	0.7		92	69
2062	3.8	0.1	0.7		92	70
2063	3.9	0.1	0.6		91	69
2064	3.7	0.1	0.7		91	69
2065	3.8	0.1	0.7		91	69
2066	3.8	0.1	0.7		90	69
2067	3.8	0.1	0.7		89	69
2068	3.8	0.1	0.6		89	69
2069	3.8	0.1	0.7		88	69
2070	3.7	0.1	0.7		89	69
2071	3.8	0.1	0.7		88	69
2072	3.8	0.1	0.7		87	69
2073	3.9	0.1	0.7		87	69
2074	3.9	0.1	0.7		87	68
2075	3.8	0.5	3.7		114	69
2076	3.9	0.3	2.2		107	68
2077	3.9	0.2	2.1		103	68
2078	3.8	0.2	1.9		99	68
2079	3.9	0.2	1.6		98	68

2080	4.0	0.2	1.5		96	68
2081	3.7	0.2	1.3		95	68
2082	3.9	0.1	1.1		94	68
2083	3.9	0.1	1.1		93	68
2084	3.7	0.1	0.9		92	68
2085	4.0	0.1	0.9		91	68
2086	3.8	0.1	0.8		91	68
2087	4.0	0.1	0.8		90	68
2088	3.9	0.1	0.7		90	68
2089	4.0	0.1	0.7		89	68
2090	3.8	0.1	0.7		89	68
2091	3.9	0.1	0.6		89	68
2092	3.9	0.1	0.6		88	68
2093	3.9	0.1	0.5		87	68
2094	3.9	0.1	0.5		87	67
2095	3.9	0.1	0.5		86	68
2096	3.9	0.1	0.5		86	68
2097	3.8	0.1	0.4		85	68
2098	3.9	0.0	0.4		85	68
2099	3.8	0.1	0.4		95	68
2100	3.8	0.5	4.1		128	67
2101	3.9	0.5	1.6		148	67
2102	3.6	1.0	2.1		161	67
2103	3.5	1.9	3.7		173	67
2104	3.3	2.3	5.6		186	67
2105	3.1	2.3	6.9		197	67
2106	2.8	2.4	8.4		209	67
2107	2.4	2.7	10.7		221	67
2108	1.9	2.3	11.9		231	67
2109	1.6	1.8	12.8		242	67
2110	1.2	1.3	13.0		253	67
2111	0.7	1.2	14.6		264	67
2112	0.2	1.0	13.9		273	67
2113	0.0	0.8	14.1		281	67
2114	0.0	0.9	14.0		287	67

OMNI-Test Laboratories, Inc. **ASTM E2618 Wood Heater Run Sheets**

Client: Central Boiler Project Number: 0117WB040E Run Number: 5
Model: Edge 360 Tracking Number: 2399 Date: 12/16/19
Test Crew: B Davis
OMNI Equipment ID numbers:

Wood Heater Supplemental Data

Start Time: 1622 19:55 hours Booth #: E3
Stop Time:

Stack Gas Leak Check:
Initial: good Final: good

Sample Train Leak Check:
A: 0.0 @ 8 "Hg
B: 0.0 @ 8 "Hg

Calibrations: Span Gas CO_2: 17.06 CO: 4.29

	Pre Test		Post Test	
	Zero	Span	Zero	Span
Time	1615	1615	12/17 1225	1225
CO_2	-0.00	17.01	0.04	16.97
CO	-0.00	4.26	-0.00	4.24

Air Velocity (ft/min): Initial: <50 Final: <50
Scale Audit (lbs): Initial: 10.0 Final: 10.0
Pitot Tube Leak Test: Initial: good Final: good
Stack Diameter (in): 6"
Induced Draft: 0.0
% Smoke Capture: 100%
Flue Pipe Cleaned Prior to First Test in Series:
Date: 12/6/19 Initials: BZ

	Initial	Middle	Ending
P_b (in/Hg)	29.85		29.81
RH (%)	27%		29%
Ambient (°F)	71		72

Tunnel Traverse

Microtector Reading	dP (in H_2O)	T(°F)
1	.012	75
2	.014	75
3	.014	75
4	.015	75
5	.014	75
6	.016	75
1	.011	75
2	.012	75
3	.014	75
4	.014	75
5	.016	75
6	.011	75
Center:		
	.014	75

Background Filter Volume: 306.035

Tunnel Static Pressure (in H_2O):	
Beginning of Test	End of Test
-.177	-.177

Technician Signature: Date: 1/9/20

OMNI-Test Laboratories, Inc.

ASTM E2618 Wood Heater Run Sheets

Client: Central Boiler Project Number: 0117WB040E Run Number: 5
Model: Edge 360 Tracking Number: 2399 Date: 12/18/19
Test Crew: B Davis
OMNI Equipment ID numbers:

Wood Heater Run Notes

Air Control Settings

Primary:

BTU Target = 35,000
Demand mode temps - 165 - 185 water temp

Secondary: fixed

Tertiary/Pilot: N/A

Fan: Automatic

Preburn Notes

Time	Notes
Ø	After burning ~~130.5~~ 94 lbs of preburn fuel, Added 30 pounds of fuel and burned at max BTU until ≈ 26 pounds. load (draw) was adjusted to ≈ 35,000 BTU and the Boiler was allowed to cycle. When it came back on @ 165° was allowed to burn down to ≈ 20 lbs and Test fuel was loaded.

Test Notes

Sketch test fuel configuration:

See photo

Start up procedures & Timeline:

Bypass: N/A
Fuel loaded by: 2 minutes
Door closed at: 2 minutes
Primary air: Automatic

Notes: 165 - 185° demand mode.

Time	Notes
60	Changed front filter in train A.

Technician Signature: [signature] Date: 1/9/20

Run 6

Hydronic Heating Appliances
Results

Manufacturer: Central Boiler
Model: Edge 360
Tracking No.: 2399
Project No.: 0117WB040E
Run: 6
Test Date: December 20, 2019

Burn Rate	**4.36 kg/hr dry**
Average Tunnel Temperature	87 degrees F
Average Gas Velocity in Dilution Tunnel - vs	7.6 feet/second
Average Gas Flow Rate in Dilution Tunnel - Qsd	20229 dscf/hour
Average Delta p	0.014 inches H20
Average Delta H	1.33 inches H20
Total Time of Test	615 minutes

PARTICULATE EMISSIONS RESULTS

First Hour:	**-0.01** g/hr
	0.00 g/kg
	0.00 lb/mmBTU output
Complete Run:	**3.05** g/hr
	0.70 g/kg
	0.10 lb/mmBTU output

	SAMPLE TRAIN 1	SAMPLE TRAIN 2	AMBIENT SAMPLE TRAIN
Total Sample Volume - Vm	99.12 cubic feet	100.20 cubic feet	166.26 cubic feet
Average Gas Meter Temperature	80 degrees F	80 degrees F	68 degrees F
Total Sample Volume (Standard Conditions) - Vmstd	97.7 dscf	96.9 dscf	163.8 dscf
Total Particulates - mn	15.4 mg	14.1 mg	0.1 mg
Particulate Concentration (dry-standard)	0.00016 grams/dscf	0.00015 grams/dscf	0.000001 grams/dscf
Particulate Emissions	32.57 grams	30.05 grams	
Difference from Average	1.26 grams	1.26 grams	

Results Are Acceptable

	AVERAGE
Total Sample Volume - Vm	99.66 cubic feet
Average Gas Meter Temperature	80 degrees F
Total Sample Volume (Standard Conditions) - Vmstd	97.3 dscf
Particulate Concentration (dry-standard)	0.00015 grams/dscf
Particulate Emissions	31.31 grams
7.5% of the average particulate emissions	2.35 grams

ADDITIONAL ACCEPTANCE CRITERIA

Boiler Water Return Temperature >120 °F	**Acceptable**
Proportional Rate Variation >80%	**Acceptable**
90% of PR Values between 90-110%	**Acceptable**

	SAMPLE TRAIN 1 - FIRST HOUR
Total Sample Volume - Vm	9.62 cubic feet
Average Gas Meter Temperature	77 degrees F
Total Sample Volume (Standard Conditions) - Vmstd	9.54 dscf
Total Particulates - mn	0.0 mg
Particulate Concentration (dry-standard)	0.00000 grams/dscf
Particulate Emissions	-0.01 grams
Burn Rate	4.91 (dry kg/hr)
Heat Output Rate	67176 BTU/hr

Hydronic Heating Appliances
Results

Manufacturer: Central Boiler
Model: Edge 360
Tracking No.: 2399
Project No.: 0117WB040E
Run #: 6
Date: 12/20/19

Equipment Numbers:

TRAIN 1 (First Hour emissions)

Sample Component	Reagent	Filter, Probe or Dish #	Weights		
			Final, mg	Tare, mg	Particulate, mg
B. Front filter catch	Filter	D960	118.3	118.3	0.0
C. Rear filter catch	Filter				0.0
D. Probe catch*	Probe				0.0
E. Filter seals catch*	Seals				0.0

Sub-Total	Total Particulate, mg:	0.0

TRAIN 1 (Post First Hour Change-out)

Sample Component	Reagent	Filter, Probe or Dish #	Weights		
			Final, mg	Tare, mg	Particulate, mg
B. Front filter catch (remainder)	Filter	D961	131.3	119.0	12.3
C. Rear filter catch	Filter	D962	119.8	119.9	-0.1
D. Probe catch*	Probe	2	115018.0	115016.7	1.3
E. Filter seals catch*	Seals	R911	4140.3	4138.4	1.9

Sub-Total	Total Particulate, mg:	15.4
Train 1 Aggregate	Total Particulate, mg:	15.4

TRAIN 2

Sample Component	Reagent	Filter, Probe or Dish #	Weights		
			Final, mg	Tare, mg	Particulate, mg
A. Front filter catch	Filter	D963	132.2	120.1	12.1
B. Rear filter catch	Filter	D964	118.8	119.3	-0.5
C. Probe catch*	Probe	3	116013.0	116012.2	0.8
D. Filter seals catch*	Seals	R912	3346.2	3344.5	1.7

Total Particulate, mg:	14.1

AMBIENT

Sample Component	Reagent	Filter # or Probe #	Weights		
			Final, mg	Tare, mg	Particulate, mg
A. Front filter catch*	Filter	D965	120.1	120.0	0.1

Total Particulate, mg:	0.1

*Particulate catch that results in a negative number, is assumed to be zero for probes and seals, negative numbers for filters are assumed to be part of the seal weight.

Component	Equations:
A. Front filter catch	Final (mg) - Tare (mg) = Particulate, mg
B. Rear filter catch	Final (mg) - Tare (mg) = Particulate, mg
C. Probe catch	Final (mg) - Tare (mg) = Particulate, mg

Hydronic Heating Appliances
Fuel Moisture

Manufacturer:	Central Boiler
Model:	Edge 360
Tracking No.:	2399
Project No.:	0117WB040E
Technician:	B. Davis
Run #:	6
Test Date:	December 20, 2019

Wet Weight (lb)	% Moisture				
10.2	23.2	20	20.9	22.6	23.5
9.6	20.8	19.3	20.4	19.9	20.4
7.3	24.9	26.7	19.1	23.9	20.4
10.3	21.9	19.1	23.6	25.2	19.5
7.8	20.6	24.5	20.8	26.4	25.8
10.8	23.3	25.4	19.5	25.7	21.5
11.9	21.1	19.9	20.8	19.8	21.3
11.7	23	21.6	20	22	20.2
10.7	26.4	25.3	23.8	23	23.9
11.1	24.9	24.5	23.1	23.3	21.4
9	24.8	20.2	25.9	26.2	24.5
10.1	19.4	19.5	19	21.7	21.5

Total Weight of Load (lb): 120.5

Total Moisture of Load (%): 22.3

Equipment Numbers:

Hydronic Heating Appliances
Test Data

Run: 6

Manufacturer: Central Boiler
Model: Edge 360
Tracking No.: 2399
Project No.: 0117WB040E
Test Date: December 20, 2019
Technician: B. Davis
Beginning Clock Time: 12:12
Recording Interval: 1 min.
Total Sampling Time: 615 min.

Velocity Traverse Data

	Pt.1	Pt.2	Pt.3	Pt.4	Pt.5	Pt.6	Pt.7	Pt.8	Pt.9	Pt.10	Pt.11	Pt.12	Center	
Initial dP	0.010	0.012	0.012	0.014	0.014	0.012	0.010	0.014	0.016	0.015	0.014	0.012	0.014	"H2O
Initial Temp.	69	69	69	69	69	69	69	69	69	69	69	69	69	oF

Air Velocity: Initial: <50 Final: <50 7.53 ft/sec
Scale Audit: Pre: 10.0 Post: 10.0 Induced Draft: 0 V_{scent} 7.56 ft/sec
Pitot Tube Leak Test: Pre: 0 Post: 0 % Smoke Capture: 100 F_p 0.958
Flue Pipe Cleaned Prior to First Test in Series: Date:

PM Control Module: 428A/B
Dilution Tunnel MW(dry): 29.00 lb/lb-mole
Dilution Tunnel MW(wet): 28.78 lb/lb-mole
Dilution Tunnel H2O: 2.00 percent
Dilution Tunnel Static: -0.180 "H2O
Pitot Tube Cp: 0.99

Meter Box Y Factor:	(1)	(2)	(amb)
	1.009	0.99	0.988

Barometric Pressure:	Begin	Middle	End	Average
	29.83	29.82	29.80	29.82 "Hg

Tunnel Velocity: 7.60 ft/sec
Intial Tunnel Flow: 331.3 scfm
Average Tunnel Flow: 337.2 scfm
Tunnel Area: 0.765 ft2
Post-Test Leak Check (1): 0.000 cfm @ 7 in. Hg
Post-Test Leak Check (2): 0.000 cfm @ 8 in. Hg
Fuel Moisture (dry basis %): 22.3
Total Particulate (1): 15.4
Total Particulate (2): 14.1

Elapsed Time	Gas Meter Cubic Feet (1)	Gas Meter Cubic Feet (2)	Gas Meter Cubic Feet (amb)	Sample Rate, cfm (1)	Sample Rate, cfm (2)	Orifice dH (1)	Orifice dH (2)	Orifice dH (amb)	Meter oF (1)	Meter oF (2)	Meter oF (amb)	Meter Vac. in. Hg (1)	Meter Vac. in. Hg (2)	Dilution Tunnel Temp.	Dilution Tunnel dP	Pro Rate (%) (1)	Pro Rate (%) (2)	Fuel Weight, lb: Scale Reading	Fuel Weight, lb: Weight Change	Flow, gpm: Load Side Liquid Flow Rate	Flow, gpm: Boiler Side Liquid Flow Rate (optional)	Temperature Data, oF: Thermopile ΔT	Boiler to Heat Exch. Temp.	Heat Exch to Boiler Temp.	Inlet Load Temp.	Outlet Load Temp.	Stack	Filter (1)	Filter (2)	Ambient		Specific Heat of Inlet Water (BTU/lb-°F)	Mass Flow Rate of Inlet Water (lb/min)	Heat Output, Btu
0	0.000	0.000	0			0.37	0.10	0.26	75	74	69	1.07	1.3	96.00	0.013			120.5		1.13		109.3	163.7	157.1	54.0	163.3	289	74	74	69				
1	0.155	0.156		0.16	0.16	1.34	1.08	0.26	75	74	70	1.92	1.4	89	0.015	93	93	119.8	0.70	1.11		110.0	164.3	157.6	53.9	163.9	274	74	74	70		1.001	9.235	1017
2	0.316	0.318		0.16	0.16	1.33	1.07	0.26	75	74	70	1.93	1.4	91	0.013	104	104	119.2	0.59	1.13		110.2	164.5	157.8	54.0	164.2	269	75	75	70		1.001	9.400	1037
3	0.476	0.479		0.16	0.16	1.33	1.07	0.26	75	74	69	1.93	1.4	98	0.014	100	100	118.6	0.63	1.32		109.8	163.9	156.1	54.0	163.8	300	75	75	69		1.001	11.014	1211
4	0.636	0.639		0.16	0.16	1.33	1.06	0.26	75	74	70	1.92	1.4	101	0.013	104	103	117.9	0.64	1.34		109.8	164.1	156.0	53.9	163.7	319	75	75	70		1.001	11.177	1229
5	0.796	0.800		0.16	0.16	1.33	1.06	0.26	75	74	69	1.92	1.4	103	0.013	105	104	117.5	0.43	1.19		110.7	164.9	156.8	53.7	164.5	331	76	75	69		1.001	9.886	1096
6	0.955	0.959		0.16	0.16	1.32	1.06	0.26	75	74	69	1.92	1.4	105	0.012	108	107	117.0	0.53	1.09		111.8	165.9	159.4	53.7	165.5	340	76	76	69		1.001	9.077	1016
7	1.115	1.120		0.16	0.16	1.33	1.06	0.26	75	74	70	1.93	1.4	106	0.011	114	114	116.5	0.50	1.15		112.8	167.0	160.3	53.7	166.5	346	76	76	70		1.001	9.564	1080
8	1.274	1.280		0.16	0.16	1.33	1.06	0.26	75	74	70	1.93	1.4	108	0.015	97	97	115.9	0.63	1.11		113.8	168.0	161.2	53.7	167.5	351	77	76	70		1.001	9.237	1053
9	1.434	1.439		0.16	0.16	1.33	1.05	0.26	75	74	70	1.93	1.4	108	0.013	105	103	115.2	0.62	1.05		114.5	168.5	161.7	53.6	168.2	355	77	77	70		1.001	8.751	1004
10	1.593	1.598		0.16	0.16	1.32	1.05	0.26	75	74	69	1.92	1.4	109	0.012	109	108	114.7	0.51	1.15		115.5	169.4	162.5	53.6	169.1	358	77	77	69		1.001	9.579	1107
11	1.752	1.758		0.16	0.16	1.33	1.05	0.26	75	74	70	1.94	1.4	110	0.014	101	100	114.2	0.54	1.22		116.1	170.1	162.7	53.6	169.7	361	77	77	70		1.001	10.133	1177
12	1.912	1.917		0.16	0.16	1.33	1.05	0.26	75	74	70	1.92	1.4	110	0.012	110	108	113.7	0.51	1.18		117.0	170.9	163.6	53.6	170.6	362	78	77	70		1.001	9.879	1157
13	2.072	2.076		0.16	0.16	1.32	1.05	0.26	75	75	70	1.92	1.5	110	0.013	105	103	113.1	0.62	1.12		117.6	171.6	164.0	53.6	171.1	363	78	77	70		1.001	9.300	1095
14	2.231	2.236		0.16	0.16	1.32	1.04	0.26	75	75	70	1.92	1.5	110	0.013	105	104	112.5	0.53	1.10		118.6	172.6	165.3	53.6	172.2	363	78	78	70		1.001	9.173	1090
15	2.389	2.394		0.16	0.16	1.31	1.05	0.26	75	75	70	1.93	1.5	110	0.012	108	107	112.1	0.38	1.22		119.4	173.5	165.7	53.6	173.0	364	78	78	70		1.001	10.172	1216
16	2.549	2.555		0.16	0.16	1.33	1.06	0.26	76	75	70	1.95	1.5	110	0.014	101	101	111.7	0.41	1.20		120.0	174.0	166.4	53.7	173.7	363	78	78	70		1.001	10.040	1206
17	2.708	2.717		0.16	0.16	1.33	1.08	0.26	76	75	70	1.94	1.5	111	0.014	101	102	111.1	0.64	1.17		120.6	174.6	167.0	53.6	174.2	364	78	78	70		1.001	9.716	1173
18	2.868	2.878		0.16	0.16	1.33	1.08	0.26	76	75	70	1.94	1.5	111	0.016	95	95	110.5	0.59	1.18		121.2	175.3	167.5	53.6	174.9	365	78	78	70		1.001	9.880	1199
19	3.027	3.039		0.16	0.16	1.32	1.08	0.26	76	75	69	1.93	1.5	111	0.014	101	101	110.1	0.43	1.01		122.1	176.5	169.9	53.7	175.9	367	78	78	69		1.001	8.422	1030
20	3.187	3.201		0.16	0.16	1.33	1.07	0.26	76	75	69	1.94	1.5	112	0.015	98	98	109.5	0.62	0.99		123.4	177.8	171.3	53.8	177.2	368	78	78	69		1.001	8.261	1021
21	3.347	3.362		0.16	0.16	1.33	1.07	0.26	76	76	70	1.94	1.5	112	0.015	98	98	109.0	0.45	0.99		124.1	178.6	172.0	54.0	178.1	370	78	78	70		1.001	8.259	1026
22	3.506	3.523		0.16	0.16	1.33	1.07	0.26	76	76	69	1.95	1.5	112	0.015	97	98	108.6	0.45	1.03		124.8	179.3	172.6	54.1	178.9	371	78	78	69		1.001	8.586	1073
23	3.666	3.684		0.16	0.16	1.33	1.07	0.26	77	76	70	1.94	1.5	112	0.014	101	101	108.1	0.47	1.01		125.5	180.4	173.4	54.2	179.7	371	78	79	70		1.001	8.420	1058
24	3.826	3.845		0.16	0.16	1.33	1.06	0.26	77	76	70	1.93	1.5	112	0.015	98	98	107.7	0.43	0.99		126.3	181.0	174.2	54.2	180.5	371	78	79	70		1.001	8.264	1045
25	3.987	4.006		0.16	0.16	1.32	1.07	0.26	77	76	69	1.93	1.5	93	0.016	94	93	107.3	0.34	1.01		127.4	182.1	175.2	54.2	181.6	336	77	78	69		1.001	8.421	1074
26	4.147	4.167		0.16	0.16	1.33	1.07	0.26	77	76	69	1.93	1.5	87	0.013	103	102	107.2	0.08	0.99		127.9	182.5	175.7	54.3	182.2	312	76	77	69		1.001	8.262	1058
27	4.307	4.329		0.16	0.16	1.32	1.07	0.26	77	77	69	1.92	1.5	83	0.014	99	99	107.2	0.05	1.03		127.9	182.5	175.7	54.3	182.2	296	75	76	69		1.001	8.585	1099
28	4.467	4.491		0.16	0.16	1.32	1.07	0.26	77	77	69	1.92	1.5	81	0.014	99	99	107.2	0.02	1.01		127.8	182.3	175.9	54.3	182.0	283	75	75	69		1.001	8.460	1082
29	4.628	4.652		0.16	0.16	1.32	1.07	0.26	77	77	69	1.91	1.5	80	0.015	96	95	107.3	-0.09	1.02		127.7	182.1	175.4	54.2	181.9	272	74	75	69		1.001	8.539	1091
30	4.788	4.815		0.16	0.16	1.32	1.08	0.26	77	77	69	1.92	1.5	80	0.013	102	103	107.1	0.13	1.03		127.3	181.9	175.0	54.3	181.5	263	74	75	69		1.001	8.589	1095
31	4.949	4.977		0.16	0.16	1.32	1.08	0.26	78	77	69	1.92	1.5	79	0.014	99	98	107.1	0.02	1.03		127.3	181.9	175.2	54.2	181.5	255	74	75	69		1.001	8.584	1094
32	5.109	5.141		0.16	0.16	1.33	1.08	0.26	78	77	69	1.91	1.5	78	0.014	98	100	107.2	-0.07	1.01		127.0	181.4	174.6	54.2	181.2	248	74	74	69		1.001	8.422	1071
33	5.270	5.303		0.16	0.16	1.33	1.08	0.26	78	77	70	1.92	1.5	78	0.015	95	95	107.1	0.04	0.99		126.8	181.2	174.3	54.2	181.0	242	73	74	70		1.001	8.266	1049
34	5.430	5.466		0.16	0.16	1.32	1.08	0.26	78	78	69	1.91	1.5	78	0.015	95	95	107.0	0.10	1.03		126.6	180.9	174.1	54.2	180.7	235	73	74	69		1.001	8.595	1069
35	5.591	5.629		0.16	0.16	1.33	1.09	0.26	78	78	69	1.91	1.5	78	0.014	99	99	107.2	-0.14	0.91		126.3	180.7	174.2	54.2	180.5	230	73	74	69		1.001	7.619	963
36	5.752	5.793		0.16	0.16	1.33	1.09	0.26	78	78	69	1.92	1.5	77	0.013	102	103	107.2	-0.01	1.01		126.1	180.4	173.8	54.1	180.2	225	73	74	69		1.001	8.430	1064
37	5.912	5.957		0.16	0.16	1.33	1.08	0.26	78	78	69	1.91	1.4	76	0.014	98	99	107.2	-0.04	1.05		125.7	180.2	173.4	54.2	179.9	222	73	74	69		1.001	8.752	1102
38	6.073	6.120		0.16	0.16	1.32	1.09	0.26	78	78	69	1.9	1.4	75	0.015	95	95	107.2	-0.01	1.05		125.2	179.5	172.7	54.1	179.3	219	73	74	69		1.001	8.747	1097
39	6.234	6.283		0.16	0.16	1.33	1.09	0.26	78	78	69	1.91	1.4	75	0.014	98	98	107.2	-0.01	1.03		125.0	179.2	172.5	54.0	179.0	216	73	73	69		1.001	8.587	1074
40	6.395	6.447		0.16	0.16	1.33	1.09	0.26	79	78	69	1.91	1.4	75	0.014	98	99	107.2	0.05	0.99		124.7	178.9	172.5	54.0	178.7	212	73	73	69		1.001	8.263	1032
41	6.556	6.611		0.16	0.16	1.33	1.09	0.26	79	78	69	1.9	1.4	75	0.015	95	96	107.2	-0.03	1.07		124.4	178.5	171.8	53.9	178.3	208	72	73	69		1.001	8.915	1110
42	6.717	6.775		0.16	0.16	1.33	1.09	0.26	79	78	69	1.9	1.4	75	0.014	98	99	107.3	-0.04	1.03		124.0	178.2	171.4	53.8	177.8	204	72	73	69		1.001	8.591	1067
43	6.878	6.940		0.16	0.17	1.34	1.09	0.26	79	78	69	1.91	1.4	75	0.014	98	100	107.3	-0.03	1.01		123.4	177.4	170.8	53.8	177.2	200	72	73	69		1.001	8.434	1042
44	7.039	7.103		0.16	0.16	1.33	1.08	0.26	79	79	69	1.9	1.4	74	0.014	98	98	107.2	0.12	1.05		123.2	177.2	170.7	53.7	177.0	196	72	73	69		1.001	8.744	1079
45	7.200	7.266		0.16	0.16	1.33	1.09	0.26	79	79	69	1.91	1.4	74	0.016	92	92	107.2	-0.01	1.05		123.1	177.1	170.8	53.7	176.8	193	72	73	69		1.001	8.738	1077
46	7.361	7.430		0.16	0.16	1.33	1.09	0.26	79	79	70	1.91	1.4	74	0.014	98	99	107.1	0.08	0.99		122.6	176.5	170.1	53.7	176.2	189	72	73	70		1.001	8.268	1015
47	7.522	7.594		0.16	0.16	1.33	1.09	0.26	79	79	69	1.91	1.4	74	0.013	102	103	107.3	-0.14	1.07		122.0	175.9	169.5	53.7	175.7	185	72	72	69		1.001	8.915	1089
48	7.683	7.758		0.16	0.16	1.33	1.09	0.26	79	79	69	1.9	1.4	74	0.013	102	103	107.3	-0.08	0.99		121.6	175.5	169.1	53.7	175.3	182	72	72	69		1.001	8.269	1007
49	7.845	7.922		0.16	0.16	1.33	1.09	0.26	79	79	69	1.92	1.5	74	0.015	95	95	107.3	0.09	1.05		121.3	175.1	168.9	53.6	175.0	179	72	72	69		1.001	8.754	1063

Elapsed Time	Particulate Sampling Data																	Fuel Weight, lb		Flow, gpm		Temperature Data, oF												
	Gas Meter Cubic Feet (1)	Gas Meter Cubic Feet (2)	Gas Meter Cubic Feet (amb)	Sample Rate, cfm (1)	Sample Rate, cfm (2)	Orifice dH (1)	Orifice dH (2)	Orifice dH (amb)	Meter oF (1)	Meter oF (2)	Meter oF (amb)	Meter Vac. in. Hg. (1)	Meter Vac. in. Hg. (2)	Dilution Tunnel Temp.	Dilution Tunnel dP	Pro. Rate (%) (1)	Pro. Rate (%) (2)	Scale Reading	Weight Change	Load Side Liquid Flow Rate	Boiler Side Liquid Flow Rate (optional)	Thermopile ΔT	Boiler to Heat Exch. Temp.	Heat Exch to Boiler Temp.	Inlet Load Temp.	Outlet Load Temp.	Stack	Filter (1)	Filter (2)	Ambient		Specific Heat of Inlet Water (BTU/lb-°F)	Mass Flow Rate of Inlet Water (lb/min)	Heat Output, Btu
50	8.006	8.056		0.16	0.16	1.33	1.09	0.26	79	79	69	1.91	1.4	74	0.013	102	103	107.2	0.04	1.01		120.9	174.7	168.3	53.7	174.6	176	72	72	69		1.001	8.429	1020
51	8.167	8.249		0.16	0.16	1.33	1.09	0.26	80	79	69	1.91	1.5	74	0.014	98	98	107.3	-0.10	1.07		120.8	174.7	168.4	53.6	174.4	173	71	72	69		1.001	8.911	1078
52	8.329	8.413		0.16	0.16	1.34	1.09	0.26	80	79	69	1.91	1.4	74	0.014	99	99	107.3	0.02	1.03		120.3	174.2	167.7	53.6	173.9	170	71	72	69		1.001	8.588	1034
53	8.490	8.577		0.16	0.16	1.34	1.09	0.26	80	79	70	1.9	1.4	74	0.014	98	99	107.2	0.09	1.03		119.6	173.3	167.0	53.6	173.2	168	71	72	70		1.001	8.595	1029
54	8.651	8.742		0.16	0.17	1.34	1.09	0.26	80	79	69	1.91	1.4	74	0.014	98	99	107.3	-0.14	1.01		118.9	172.8	166.5	53.7	172.6	165	71	72	69		1.001	8.432	1004
55	8.813	8.906		0.16	0.16	1.34	1.09	0.26	80	79	69	1.91	1.4	74	0.014	99	99	107.3	0.05	1.03		118.4	172.3	166.1	53.7	172.1	162	71	72	69		1.001	8.596	1019
56	8.974	9.070		0.16	0.16	1.34	1.09	0.26	80	79	69	1.9	1.5	73	0.014	98	99	107.3	-0.03	1.01		118.3	172.1	165.8	53.6	171.9	160	71	72	69		1.001	8.433	998
57	9.136	9.233		0.16	0.16	1.34	1.09	0.26	80	80	69	1.9	1.4	73	0.015	95	95	107.3	0.00	1.03		117.7	171.6	165.2	53.6	171.3	158	71	71	69		1.001	8.587	1012
58	9.297	9.397		0.16	0.16	1.33	1.09	0.26	80	80	69	1.92	1.4	73	0.014	98	99	107.3	0.00	1.03		117.2	171.2	164.9	53.6	170.9	156	71	71	69		1.001	8.592	1008
59	9.459	9.562		0.16	0.16	1.33	1.09	0.26	80	80	69	1.9	1.4	73	0.015	95	96	107.3	0.03	0.99		116.7	170.7	164.3	53.6	170.3	154	71	71	69		1.001	8.267	966
60	9.620	9.726		0.16	0.16	1.34	1.09	0.26	80	80	69	1.92	1.5	73	0.013	102	102	107.3	0.01	1.03		116.5	170.4	164.1	53.6	170.1	151	71	71	69		1.001	8.608	1004
61	9.782	9.891		0.16	0.16	1.34	1.09	0.26	80	80	69	1.9	1.4	73	0.014	98	99	107.4	-0.10	1.03		116.0	169.7	163.5	53.6	169.6	149	71	71	69		1.001	8.551	993
62	9.943	10.054		0.16	0.16	1.34	1.09	0.26	80	80	69	1.92	1.4	73	0.013	102	102	107.3	0.06	1.00		115.6	169.4	163.1	53.6	169.1	147	71	71	69		1.001	8.356	967
63	10.105	10.219		0.16	0.16	1.34	1.09	0.26	80	80	69	1.9	1.4	73	0.012	106	107	107.3	0.01	1.01		115.2	168.9	162.7	53.5	168.7	145	71	71	69		1.001	8.428	972
64	10.266	10.383		0.16	0.16	1.34	1.09	0.26	80	80	69	1.91	1.4	73	0.014	98	99	107.4	-0.07	1.15		114.8	168.5	161.9	53.5	168.3	143	71	71	69		1.001	9.571	1100
65	10.428	10.546		0.16	0.16	1.33	1.09	0.26	80	80	69	1.92	1.4	73	0.014	98	98	107.3	0.05	1.15		113.8	167.5	160.4	53.5	167.4	142	71	71	69		1.001	9.567	1090
66	10.589	10.711		0.16	0.17	1.33	1.09	0.26	80	80	69	1.9	1.4	73	0.013	102	103	107.4	-0.04	1.17		113.3	166.9	159.9	53.5	166.8	140	71	71	69		1.001	9.727	1103
67	10.751	10.875		0.16	0.16	1.33	1.09	0.26	80	80	69	1.91	1.5	80	0.014	99	99	107.3	0.07	1.11		112.7	166.5	159.5	53.4	166.1	163	71	71	69		1.001	9.240	1043
68	10.914	11.039		0.16	0.16	1.34	1.09	0.26	81	80	69	1.9	1.5	80	0.014	100	99	107.1	0.19	1.15		112.4	165.9	158.7	53.4	165.7	184	72	71	69		1.001	9.566	1076
69	11.075	11.203		0.16	0.16	1.34	1.09	0.26	81	80	69	1.9	1.5	75	0.011	110	111	107.2	-0.11	1.17		111.7	165.4	158.2	53.4	165.1	167	72	71	69		1.001	9.728	1088
70	11.237	11.367		0.16	0.16	1.34	1.09	0.26	81	80	69	1.89	1.4	73	0.013	102	102	107.1	0.09	1.19		111.0	164.7	157.5	53.4	164.4	156	72	71	69		1.001	9.885	1099
71	11.399	11.531		0.16	0.16	1.34	1.09	0.26	81	80	69	1.91	1.4	73	0.014	98	99	107.1	0.00	1.17		110.6	164.2	157.1	53.5	164.0	150	72	71	69		1.001	9.723	1076
72	11.561	11.696		0.16	0.16	1.34	1.10	0.26	81	80	69	1.91	1.4	73	0.014	98	99	107.2	-0.09	1.21		109.9	163.7	156.7	53.6	163.5	145	72	71	69		1.001	10.048	1105
73	11.722	11.860		0.16	0.16	1.34	1.10	0.26	81	80	69	1.89	1.4	73	0.015	94	95	107.2	0.04	1.19		109.5	163.5	156.5	53.7	163.2	142	72	71	69		1.001	9.887	1084
74	11.884	12.025		0.16	0.17	1.34	1.10	0.26	81	80	69	1.91	1.4	73	0.016	92	93	107.2	-0.04	1.19		108.8	162.7	155.9	53.8	162.6	139	72	71	69		1.001	9.891	1077
75	12.046	12.189		0.16	0.16	1.34	1.09	0.26	81	80	69	1.91	1.4	73	0.016	92	92	107.0	0.18	1.17		108.2	162.2	155.4	53.9	162.0	137	72	71	69		1.001	9.721	1053
76	12.208	12.353		0.16	0.16	1.34	1.09	0.26	81	80	69	1.91	1.4	73	0.013	102	102	107.2	-0.14	1.20		107.5	161.7	154.9	53.9	161.5	135	71	71	69		1.001	10.044	1081
77	12.369	12.517		0.16	0.16	1.33	1.09	0.26	81	80	69	1.91	1.40	73	0.015	94	95	107.1	0.07	1.17		107.1	161.2	154.5	54.0	161.1	134	71	71	69		1.001	9.721	1042
78	12.531	12.681		0.16	0.16	1.34	1.09	0.26	81	80	69	1.91	1.50	81	0.015	96	96	107.0	0.15	1.13		106.5	160.7	153.9	54.0	160.5	172	72	71	69		1.001	9.404	1002
79	12.693	12.845		0.16	0.16	1.34	1.09	0.26	81	80	69	1.90	1.50	85	0.014	99	100	106.6	0.31	1.28		105.9	160.1	153.2	54.0	159.9	200	72	71	69		1.001	10.695	1134
80	12.854	13.010		0.16	0.16	1.34	1.09	0.26	81	80	69	1.92	1.50	88	0.013	103	104	106.4	0.23	1.29		105.2	159.3	152.1	54.0	159.2	224	72	71	69		1.001	10.722	1129
81	13.016	13.173		0.16	0.16	1.34	1.09	0.26	81	80	69	1.93	1.50	91	0.014	100	100	105.9	0.52	1.30		104.8	159.0	151.8	53.9	158.7	251	72	72	69		1.001	10.856	1139
82	13.178	13.337		0.16	0.16	1.34	1.08	0.26	81	80	69	1.93	1.50	95	0.014	100	101	105.4	0.49	1.28		105.0	159.1	151.8	53.8	158.8	276	73	72	69		1.001	10.697	1124
83	13.339	13.500		0.16	0.16	1.34	1.09	0.26	81	80	69	1.92	1.50	98	0.014	100	100	105.0	0.38	1.22		104.9	159.0	151.6	53.7	158.6	297	73	73	69		1.001	10.195	1071
84	13.500	13.663		0.16	0.16	1.34	1.09	0.26	81	80	69	1.93	1.50	100	0.015	97	97	104.5	0.54	1.26		105.6	159.6	152.4	53.7	159.3	311	73	73	69		1.001	10.485	1109
85	13.661	13.827		0.16	0.16	1.34	1.09	0.26	81	80	69	1.91	1.50	102	0.014	100	101	104.1	0.40	1.30		105.9	160.0	152.6	53.7	159.6	322	74	73	69		1.001	10.823	1148
86	13.823	13.991		0.16	0.16	1.34	1.09	0.26	81	81	69	1.93	1.50	104	0.014	101	101	103.4	0.68	1.26		106.6	160.7	153.3	53.7	160.3	330	74	74	69		1.001	10.533	1124
87	13.984	14.154		0.16	0.16	1.33	1.08	0.26	81	80	69	1.94	1.50	105	0.015	97	97	102.8	0.61	1.28		107.1	161.1	153.6	53.7	160.8	337	74	74	69		1.001	10.700	1147
88	14.145	14.316		0.16	0.16	1.33	1.08	0.26	81	80	69	1.93	1.50	106	0.014	101	100	102.2	0.59	1.28		107.7	161.6	154.2	53.5	161.3	341	75	75	69		1.001	10.701	1154
89	14.306	14.479		0.16	0.16	1.34	1.09	0.26	81	80	69	1.94	1.50	107	0.014	101	101	101.7	0.49	1.30		108.6	162.6	154.9	53.5	162.2	344	75	75	69		1.001	10.860	1181
90	14.467	14.642		0.16	0.16	1.34	1.08	0.26	81	80	69	1.93	1.50	107	0.014	101	101	101.2	0.48	1.26		109.1	163.0	155.3	53.6	162.7	347	76	75	69		1.001	10.532	1150
91	14.628	14.806		0.16	0.16	1.33	1.08	0.26	81	81	69	1.93	1.50	107	0.013	105	105	100.6	0.66	1.22		109.5	163.6	156.2	53.7	163.2	348	76	76	69		1.001	10.211	1119
92	14.790	14.968		0.16	0.16	1.34	1.08	0.26	81	81	69	1.94	1.50	108	0.014	101	100	100.2	0.40	1.22		110.2	164.3	157.0	53.8	164.0	351	76	76	69		1.001	10.212	1127
93	14.951	15.130		0.16	0.16	1.33	1.08	0.26	81	81	69	1.94	1.50	109	0.014	101	100	99.7	0.46	1.21		111.1	165.3	157.9	53.9	165.0	352	76	76	69		1.001	10.049	1118
94	15.112	15.293		0.16	0.16	1.33	1.08	0.26	81	81	69	1.95	1.50	109	0.015	97	98	99.0	0.73	1.22		111.7	166.0	158.5	54.0	165.7	353	77	76	69		1.001	10.208	1142
95	15.273	15.456		0.16	0.16	1.33	1.07	0.26	81	81	69	1.94	1.50	109	0.014	101	101	98.5	0.46	1.21		112.1	166.5	159.4	54.0	166.2	354	77	77	69		1.001	10.051	1129
96	15.434	15.618		0.16	0.16	1.33	1.07	0.26	81	81	69	1.95	1.50	110	0.015	98	97	97.9	0.58	1.24		112.8	167.2	159.7	54.1	166.9	356	77	77	69		1.001	10.362	1170
97	15.595	15.780		0.16	0.16	1.33	1.07	0.26	81	81	69	1.94	1.50	111	0.013	105	104	97.5	0.47	1.24		113.6	168.1	160.1	54.1	167.6	358	77	77	69		1.001	10.369	1179
98	15.755	15.942		0.16	0.16	1.33	1.07	0.26	81	81	69	1.94	1.50	111	0.014	100	101	97.0	0.50	1.20		114.2	168.7	160.7	54.1	168.3	360	77	77	69		1.001	10.045	1148
99	15.916	16.104		0.16	0.16	1.33	1.07	0.26	81	81	69	1.95	1.50	112	0.015	98	97	96.3	0.61	1.26		115.2	169.9	161.8	54.1	169.4	361	78	78	69		1.001	10.528	1215
100	16.077	16.267		0.16	0.16	1.32	1.07	0.26	81	81	69	1.94	1.50	112	0.014	101	101	95.7	0.62	1.24		115.8	170.3	162.3	54.1	169.9	362	78	78	69		1.001	10.366	1202
101	16.238	16.428		0.16	0.16	1.32	1.07	0.26	81	81	69	1.96	1.50	112	0.014	101	100	95.4	0.37	1.22		116.5	170.9	162.9	54.0	170.5	363	78	78	69		1.001	10.200	1189
102	16.399	16.590		0.16	0.16	1.33	1.07	0.26	81	81	69	1.95	1.50	113	0.014	101	101	94.8	0.53	1.22		117.4	171.7	163.7	53.8	171.3	364	78	78	69		1.001	10.206	1200
103	16.559	16.752		0.16	0.16	1.32	1.07	0.26	81	81	69	1.95	1.50	113	0.014	101	101	94.6	0.20	1.26		118.6	172.5	164.4	53.6	172.1	364	78	78	69		1.001	10.530	1250
104	16.720	16.914		0.16	0.16	1.32	1.06	0.26	81	81	69	1.96	1.50	113	0.014	101	101	93.8	0.79	1.26		119.4	173.1	164.9	53.3	172.7	364	78	78	69		1.001	10.525	1258
105	16.880	17.075		0.16	0.16	1.32	1.06	0.26	81	81	69	1.95	1.50	113	0.014	101	100	93.5	0.32	1.26		120.3	173.8	165.4	53.1	173.4	364	78	78	69		1.001	10.527	1268
106	17.041	17.236		0.16	0.16	1.33	1.06	0.26	81	81	69	1.94	1.50	113	0.012	109	108	92.9	0.62	1.23		121.5	174.9	166.4	52.9	174.4	363	78	78	69		1.001	10.218	1242
107	17.202	17.398		0.16	0.16	1.33	1.06	0.26	81	81	69	1.95	1.60	113	0.014	101	101	92.4	0.54	1.24		122.0	175.1	166.7	52.8	174.8	363	78	78	69		1.001	10.377	1267
108	17.362	17.559		0.16	0.16	1.32	1.06	0.26	81	81	69	1.96	1.60	113	0.014	101	100	92.1	0.27	1.32		122.5	175.8	167.3	52.8	175.3	363	78	78	69		1.001	11.013	1351
109	17.523	17.719		0.16	0.16	1.33	1.05	0.26	81	81	69	1.96	1.60	113	0.014	101	99	91.5	0.55	1.07		123.4	176.8	169.7	52.8	176.2	364	78	78	69		1.001	8.917	1102
110	17.683	17.880		0.16	0.16	1.33	1.05	0.26	81	81	69	1.95	1.60	113	0.014	101	100	91.0	0.51	1.06		124.5	177.7	170.7	52.8	177.3	364	78	78	69		1.001	8.820	1100
111	17.844	18.041		0.16	0.16	1.33	1.05	0.26	81	81	69	1.96	1.60	113	0.014	101	100	90.7	0.31	1.07		125.2	178.4	171.4	52.8	178.0	363	78	78	69		1.001	8.908	1116

Elapsed Time	Particulate Sampling Data																	Fuel Weight, lb		Flow, gpm		Temperature Data, oF												
	Gas Meter Cubic Feet (1)	Gas Meter Cubic Feet (2)	Gas Meter Cubic Feet (amb)	Sample Rate, cfm (1)	Sample Rate, cfm (2)	Orifice dH (1)	Orifice dH (2)	Orifice dH (amb)	Meter oF (1)	Meter oF (2)	Meter oF (amb)	Meter Vac. in. Hg. (1)	Meter Vac. in. Hg. (2)	Dilution Tunnel Temp.	Dilution Tunnel dP	Pro. Rate (%) (1)	Pro. Rate (%) (2)	Scale Reading	Weight Change	Load Side Liquid Flow Rate	Boiler Side Liquid Flow Rate (optional)	Thermopile ΔT	Boiler to Heat Exch. Temp.	Heat Exch to Boiler Temp.	Inlet Load Temp.	Outlet Load Temp.	Stack	Filter (1)	Filter (2)	Ambient		Specific Heat of Inlet Water (BTU/lb-°F)	Mass Flow Rate of Inlet Water (lb/min)	Heat Output, Btu
112	18.004	18.201		0.16	0.16	1.32	1.04	0.26	81	81	69	1.97	1.60	113	0.015	97	96	90.1	0.57	1.07		126.0	179.2	172.3	52.8	178.9	363	78	78	69		1.001	8.908	1124
113	18.165	18.361		0.16	0.16	1.32	1.04	0.26	81	81	69	1.96	1.60	113	0.014	101	99	89.8	0.39	1.11		126.6	179.9	172.9	52.9	179.4	362	78	78	69		1.001	9.236	1170
114	18.326	18.524		0.16	0.16	1.33	1.07	0.26	81	81	69	1.97	1.60	113	0.014	101	101	89.3	0.47	1.07		127.0	180.5	173.4	52.9	179.9	361	78	78	69		1.001	8.910	1133
115	18.486	18.686		0.16	0.16	1.33	1.07	0.26	81	81	69	1.96	1.70	113	0.015	97	97	88.8	0.52	1.05		127.7	181.1	173.9	53.0	180.6	361	78	78	69		1.001	8.744	1118
116	18.647	18.848		0.16	0.16	1.32	1.07	0.26	81	81	69	1.95	1.60	94	0.014	100	99	88.6	0.18	1.07		128.7	182.0	174.9	53.0	181.6	331	77	77	69		1.001	8.909	1148
117	18.808	19.010		0.16	0.16	1.33	1.07	0.26	81	81	69	1.93	1.60	88	0.013	103	102	88.4	0.23	0.99		128.9	182.1	175.1	53.0	181.8	307	76	76	69		1.001	8.263	1066
118	18.969	19.173		0.16	0.16	1.33	1.07	0.26	82	81	69	1.93	1.60	84	0.015	95	95	88.2	0.11	1.03		128.9	182.1	175.0	53.0	181.9	291	75	75	69		1.001	8.587	1108
119	19.130	19.336		0.16	0.16	1.33	1.07	0.26	82	81	69	1.94	1.60	82	0.015	95	95	88.1	0.10	1.03		128.9	182.3	175.2	53.0	181.9	279	74	75	69		1.001	8.587	1108
120	19.292	19.498		0.16	0.16	1.32	1.07	0.26	82	81	69	1.94	1.60	81	0.015	95	95	88.1	0.07	1.05		128.7	181.8	174.9	53.0	181.7	269	73	74	69		1.001	8.750	1127
121	19.453	19.660		0.16	0.16	1.33	1.08	0.26	82	81	69	1.93	1.60	80	0.013	102	101	88.1	-0.02	1.03		128.5	181.8	174.8	53.1	181.5	259	73	74	69		1.001	8.586	1104
122	19.615	19.824		0.16	0.16	1.33	1.08	0.26	82	81	69	1.93	1.60	79	0.014	99	99	88.0	0.14	1.01		128.2	181.6	174.5	53.1	181.3	251	72	73	69		1.001	8.432	1082
123	19.776	19.988		0.16	0.16	1.33	1.09	0.26	82	81	69	1.93	1.60	78	0.015	95	95	88.1	-0.11	1.05		128.0	181.4	174.2	53.1	181.1	244	72	73	69		1.001	8.739	1120
124	19.937	20.152		0.16	0.16	1.33	1.09	0.26	82	81	69	1.93	1.60	78	0.013	102	103	87.8	0.22	1.08		127.6	181.2	174.1	53.2	180.8	238	72	73	69		1.001	9.016	1152
125	20.099	20.316		0.16	0.16	1.33	1.09	0.26	82	81	69	1.94	1.60	78	0.014	99	99	87.8	0.00	1.06		127.3	180.8	173.7	53.2	180.5	232	72	73	69		1.001	8.876	1131
126	20.260	20.480		0.16	0.16	1.33	1.10	0.26	82	81	69	1.93	1.60	77	0.014	98	99	87.9	-0.11	1.05		126.9	180.4	173.4	53.3	180.2	227	71	73	69		1.001	8.755	1112
127	20.422	20.645		0.16	0.16	1.33	1.11	0.26	82	81	69	1.92	1.50	77	0.014	98	99	87.8	0.18	1.01		126.5	180.1	173.0	53.3	179.8	222	71	73	69		1.001	8.412	1066
128	20.583	20.810		0.16	0.16	1.33	1.11	0.26	82	81	68	1.94	1.50	75	0.015	94	96	87.8	-0.04	1.07		126.5	180.0	173.1	53.3	179.8	220	71	73	68		1.001	8.920	1129
129	20.745	20.976		0.16	0.17	1.33	1.11	0.26	81	81	69	1.92	1.50	75	0.015	95	96	87.7	0.10	1.09		125.8	179.5	172.6	53.4	179.3	217	71	72	69		1.001	9.079	1144
130	20.906	21.141		0.16	0.16	1.33	1.11	0.26	81	81	69	1.93	1.50	74	0.015	94	96	87.8	-0.06	1.03		125.5	179.2	172.3	53.5	179.0	213	71	72	69		1.001	8.598	1081
131	21.068	21.308		0.16	0.17	1.33	1.12	0.26	81	81	69	1.92	1.50	74	0.014	98	100	87.8	0.02	1.03		125.1	178.8	172.0	53.5	178.6	209	71	72	69		1.001	8.595	1076
132	21.229	21.474		0.16	0.17	1.33	1.12	0.26	82	81	69	1.93	1.50	74	0.015	94	96	87.9	-0.14	1.05		124.6	178.4	171.6	53.6	178.2	205	71	72	69		1.001	8.755	1092
133	21.391	21.640		0.16	0.17	1.33	1.11	0.26	82	81	69	1.92	1.50	74	0.015	95	96	87.8	0.08	1.03		124.2	178.0	171.1	53.6	177.8	201	71	72	69		1.001	8.594	1069
134	21.553	21.807		0.16	0.17	1.33	1.12	0.26	81	81	69	1.93	1.50	74	0.014	98	100	87.8	-0.01	0.97		123.8	177.6	171.2	53.7	177.4	197	71	72	69		1.001	8.112	1005
135	21.714	21.973		0.16	0.17	1.33	1.12	0.26	81	81	69	1.92	1.50	73	0.014	98	100	87.9	-0.04	0.99		123.6	177.4	171.1	53.6	177.2	194	71	72	69		1.001	8.275	1024
136	21.876	22.140		0.16	0.17	1.33	1.12	0.26	82	81	69	1.93	1.50	73	0.015	95	97	87.9	0.02	1.01		123.1	177.1	170.3	53.8	176.9	190	71	72	69		1.001	8.436	1040
137	22.037	22.306		0.16	0.17	1.33	1.12	0.26	81	81	69	1.91	1.50	73	0.014	98	100	87.9	-0.02	1.09		122.5	176.4	169.6	53.8	176.2	187	71	71	69		1.001	9.081	1113
138	22.199	22.473		0.16	0.17	1.33	1.13	0.26	81	81	69	1.93	1.50	73	0.014	98	100	87.8	0.04	1.09		122.0	176.0	169.4	53.8	175.8	184	71	71	69		1.001	9.067	1110
139	22.360	22.639		0.16	0.17	1.33	1.12	0.26	81	81	69	1.92	1.50	73	0.014	98	100	88.0	-0.16	1.05		121.7	175.9	169.0	53.8	175.5	180	70	71	69		1.001	8.764	1068
140	22.522	22.806		0.16	0.17	1.33	1.13	0.26	81	81	69	1.91	1.50	73	0.014	98	100	87.8	0.18	1.05		121.3	175.3	168.6	53.8	175.1	177	70	71	69		1.001	8.771	1065
141	22.684	22.973		0.16	0.17	1.33	1.13	0.26	81	81	69	1.93	1.50	73	0.013	102	104	87.9	-0.10	1.07		120.7	174.8	168.1	53.9	174.6	174	70	71	69		1.001	8.946	1081
142	22.845	23.139		0.16	0.17	1.33	1.13	0.26	81	81	69	1.92	1.50	73	0.015	94	96	87.9	-0.03	0.99		120.3	174.4	167.8	53.9	174.2	171	70	71	69		1.001	8.271	996
143	23.007	23.306		0.16	0.17	1.34	1.12	0.26	81	81	69	1.92	1.50	73	0.015	95	97	87.9	0.08	1.05		119.9	173.9	167.3	53.8	173.7	168	70	71	69		1.001	8.759	1051
144	23.169	23.473		0.16	0.17	1.34	1.12	0.26	81	81	69	1.91	1.50	73	0.012	106	108	87.9	-0.05	1.01		119.7	173.7	167.3	53.9	173.5	166	70	71	69		1.001	8.435	1011
145	23.330	23.640		0.16	0.17	1.33	1.12	0.26	81	81	69	1.92	1.50	73	0.014	98	100	87.8	0.15	1.01		119.0	173.2	166.7	53.9	172.9	163	70	71	69		1.001	8.437	1005
146	23.492	23.806		0.16	0.17	1.33	1.13	0.26	81	81	69	1.92	1.50	73	0.013	102	103	87.9	-0.10	1.05		118.4	172.5	166.1	53.8	172.3	161	70	71	69		1.001	8.764	1039
147	23.654	23.973		0.16	0.17	1.34	1.13	0.26	81	81	69	1.92	1.50	73	0.015	95	97	87.9	-0.03	1.03		118.0	172.2	165.7	53.8	171.9	158	70	70	69		1.001	8.595	1016
148	23.816	24.140		0.16	0.17	1.34	1.13	0.26	81	81	69	1.92	1.50	73	0.016	92	94	88.0	-0.07	0.93		117.6	171.7	165.4	53.8	171.4	156	70	70	69		1.001	7.791	917
149	23.978	24.307		0.16	0.17	1.33	1.13	0.26	81	81	69	1.92	1.50	73	0.014	98	100	88.0	0.00	1.03		117.4	171.4	164.9	53.7	171.1	154	70	70	69		1.001	8.599	1011
150	24.140	24.474		0.16	0.17	1.34	1.13	0.26	81	81	69	1.91	1.50	73	0.013	102	104	88.0	-0.04	1.07		116.8	170.9	164.5	53.8	170.6	151	70	70	69		1.001	8.927	1044
151	24.301	24.641		0.16	0.17	1.34	1.13	0.26	81	81	69	1.92	1.50	72	0.013	101	104	88.0	0.02	1.07		116.6	170.7	164.1	53.8	170.4	149	70	70	69		1.001	8.928	1042
152	24.463	24.808		0.16	0.17	1.34	1.13	0.26	81	81	69	1.92	1.50	72	0.014	98	100	88.0	0.01	0.97		116.1	170.1	163.7	53.7	169.9	147	70	70	69		1.001	8.115	943
153	24.625	24.975		0.16	0.17	1.33	1.13	0.26	81	81	69	1.92	1.50	72	0.014	98	100	88.0	-0.02	1.01		115.4	169.3	163.0	53.7	169.1	145	70	70	69		1.001	8.440	975
154	24.787	25.141		0.16	0.17	1.33	1.13	0.26	81	81	69	1.91	1.50	72	0.014	98	99	87.9	0.06	1.05		115.1	169.1	162.7	53.7	168.9	143	70	70	69		1.001	8.779	1012
155	24.949	25.308		0.16	0.17	1.33	1.12	0.26	81	81	69	1.92	1.50	72	0.013	102	104	87.9	0.02	1.05		114.6	168.5	162.2	53.8	168.3	142	70	70	69		1.001	8.714	1000
156	25.111	25.475		0.16	0.17	1.33	1.13	0.26	81	81	68	1.91	1.50	72	0.013	102	104	87.9	0.01	1.01		114.3	168.3	161.9	53.8	168.1	140	70	70	68		1.001	8.438	966
157	25.273	25.641		0.16	0.17	1.33	1.12	0.26	81	81	69	1.91	1.50	72	0.013	102	103	88.0	-0.07	1.00		113.7	167.7	161.4	53.7	167.5	138	70	70	69		1.001	8.345	950
158	25.434	25.808		0.16	0.17	1.33	1.11	0.26	81	81	69	1.93	1.50	81	0.014	98	101	87.9	0.10	1.03		113.2	167.1	160.8	53.7	166.9	161	70	71	69		1.001	8.603	975
159	25.596	25.974		0.16	0.17	1.33	1.12	0.26	81	81	69	1.93	1.50	81	0.014	99	100	87.8	0.10	1.03		112.7	166.6	160.3	53.7	166.4	177	70	70	69		1.001	8.600	970
160	25.758	26.140		0.16	0.17	1.34	1.12	0.26	81	81	69	1.91	1.50	74	0.013	102	103	87.8	-0.02	1.03		112.2	166.1	159.9	53.8	165.9	163	70	70	69		1.001	8.600	966
161	25.920	26.308		0.16	0.17	1.33	1.13	0.26	81	81	69	1.92	1.50	73	0.014	98	101	87.8	0.04	1.05		111.7	165.7	159.4	53.8	165.4	154	70	70	69		1.001	8.764	980
162	26.082	26.474		0.16	0.17	1.34	1.13	0.26	81	81	69	1.92	1.50	72	0.013	102	103	87.6	0.15	1.01		111.4	165.4	159.2	53.7	165.1	147	70	70	69		1.001	8.436	941
163	26.244	26.641		0.16	0.17	1.34	1.13	0.26	81	81	69	1.91	1.50	72	0.014	98	100	87.8	-0.20	1.07		110.9	164.9	158.8	53.8	164.7	143	70	70	69		1.001	8.923	991
164	26.405	26.808		0.16	0.17	1.34	1.13	0.26	81	81	69	1.91	1.50	72	0.014	98	100	87.8	0.01	1.05		110.4	164.3	158.3	53.8	164.1	140	70	70	69		1.001	8.768	969
165	26.567	26.975		0.16	0.17	1.34	1.13	0.26	81	81	69	1.92	1.50	72	0.014	98	100	87.7	0.11	1.07		110.0	164.0	157.9	53.7	163.8	137	70	70	69		1.001	8.927	984
166	26.730	27.141		0.16	0.17	1.34	1.13	0.26	81	81	69	1.91	1.50	72	0.014	99	99	87.8	-0.11	1.05		109.6	163.6	157.5	53.8	163.4	135	69	70	69		1.001	8.764	962
167	26.892	27.309		0.16	0.17	1.34	1.13	0.26	81	81	69	1.93	1.50	72	0.014	98	101	87.8	0.04	1.09		109.1	163.1	157.1	53.8	162.9	133	69	70	69		1.001	9.083	992
168	27.054	27.475		0.16	0.17	1.34	1.13	0.26	81	81	68	1.93	1.50	72	0.014	98	99	87.8	-0.03	0.99		108.5	162.5	156.5	53.8	162.4	131	69	70	68		1.001	8.275	899
169	27.216	27.642		0.16	0.17	1.34	1.13	0.26	81	81	69	1.92	1.50	72	0.014	98	100	87.8	-0.02	1.05		108.0	162.2	156.3	53.9	162.0	129	69	70	69		1.001	8.759	947
170	27.378	27.809		0.16	0.17	1.33	1.13	0.26	81	81	68	1.91	1.50	72	0.014	98	100	87.7	0.05	1.30		107.0	161.2	153.7	54.0	161.0	128	69	70	68		1.001	10.857	1163
171	27.540	27.976		0.16	0.17	1.33	1.12	0.26	81	81	69	1.92	1.50	80	0.013	103	105	87.7	0.08	1.24		106.3	160.6	153.4	54.1	160.4	153	70	70	69		1.001	10.369	1103
172	27.701	28.142		0.16	0.17	1.33	1.12	0.26	81	81	69	1.91	1.50	82	0.013	102	104	87.6	0.04	1.32		105.4	159.7	152.3	54.1	159.6	171	70	70	69		1.001	11.011	1162
173	27.863	28.309		0.16	0.17	1.33	1.12	0.26	81	81	69	1.93	1.50	84	0.014	99	101	87.6	0.00	1.27		104.8	159.1	151.9	54.2	159.0	181	70	70	69		1.001	10.564	1108

Elapsed Time	Particulate Sampling Data																	Fuel Weight, lb		Flow, gpm		Temperature Data, oF												
	Gas Meter Cubic Feet (1)	Gas Meter Cubic Feet (2)	Gas Meter Cubic Feet (amb)	Sample Rate, cfm (1)	Sample Rate, cfm (2)	Orifice dH (1)	Orifice dH (2)	Orifice dH (amb)	Meter oF (1)	Meter oF (2)	Meter oF (amb)	Meter Vac. in. Hg. (1)	Meter Vac. in. Hg. (2)	Dilution Tunnel Temp.	Dilution Tunnel dP	Pro. Rate (%) (1)	Pro. Rate (%) (2)	Scale Reading	Weight Change	Load Side Liquid Flow Rate	Boiler Side Liquid Flow Rate (optional)	Thermopile ΔT	Boiler to Heat Exch. Temp.	Heat Exch to Boiler Temp.	Inlet Load Temp.	Outlet Load Temp.	Stack	Filter (1)	Filter (2)	Ambient		Specific Heat of Inlet Water (BTU/lb-°F)	Mass Flow Rate of Inlet Water (lb/min)	Heat Output, Btu
174	28.025	28.476		0.16	0.17	1.33	1.12	0.26	81	81	69	1.93	1.50	85	0.013	103	105	87.4	0.26	1.28		104.2	158.6	151.4	54.2	158.4	186	70	71	69		1.001	10.633	1109
175	28.187	28.642		0.16	0.17	1.33	1.12	0.26	81	81	68	1.93	1.50	85	0.012	107	109	87.2	0.17	1.28		103.7	158.1	150.9	54.2	157.9	190	70	71	68		1.001	10.696	1110
176	28.348	28.809		0.16	0.17	1.33	1.12	0.26	81	81	68	1.91	1.50	86	0.015	95	98	87.1	0.14	1.23		103.2	157.6	150.4	54.1	157.3	196	71	71	68		1.001	10.214	1055
177	28.510	28.975		0.16	0.17	1.34	1.12	0.26	81	81	68	1.92	1.50	87	0.013	103	105	86.9	0.13	1.28		102.9	157.2	149.9	54.0	156.9	202	71	71	68		1.001	10.697	1102
178	28.672	29.141		0.16	0.17	1.33	1.12	0.26	81	81	69	1.92	1.50	87	0.013	103	105	86.6	0.31	1.28		102.6	156.8	149.7	54.0	156.6	209	71	71	69		1.001	10.696	1099
179	28.834	29.308		0.16	0.17	1.33	1.12	0.26	81	81	68	1.93	1.50	88	0.014	100	102	86.5	0.15	1.34		102.3	156.4	149.3	53.9	156.2	216	71	71	68		1.001	11.176	1144
180	28.995	29.474		0.16	0.17	1.34	1.12	0.26	81	81	68	1.92	1.50	89	0.015	96	98	86.3	0.18	1.32		102.1	156.2	149.1	53.8	156.0	223	71	71	68		1.001	11.021	1127
181	29.157	29.640		0.16	0.17	1.33	1.12	0.26	81	81	68	1.92	1.50	90	0.014	100	101	86.0	0.28	1.28		102.0	156.0	148.9	53.8	155.8	230	71	72	68		1.001	10.693	1092
182	29.319	29.806		0.16	0.17	1.34	1.12	0.26	81	81	69	1.94	1.50	91	0.012	108	109	85.6	0.37	1.30		102.0	155.9	148.9	53.7	155.7	237	71	72	69		1.001	10.854	1108
183	29.480	29.973		0.16	0.17	1.33	1.13	0.26	81	81	68	1.92	1.50	92	0.014	99	102	85.4	0.29	1.28		102.0	156.0	148.8	53.7	155.7	244	72	72	68		1.001	10.698	1093
184	29.642	30.139		0.16	0.17	1.33	1.13	0.26	81	81	68	1.93	1.50	93	0.013	104	105	85.1	0.30	1.28		102.0	155.9	148.8	53.6	155.6	252	72	72	68		1.001	10.700	1093
185	29.803	30.305		0.16	0.17	1.33	1.13	0.26	81	81	68	1.94	1.50	94	0.014	100	101	84.6	0.43	1.26		102.4	156.2	149.1	53.6	156.0	259	72	72	68		1.001	10.536	1080
186	29.965	30.471		0.16	0.17	1.33	1.12	0.26	81	81	68	1.93	1.50	95	0.014	100	102	84.2	0.38	1.34		102.3	156.2	149.0	53.5	155.8	266	72	73	68		1.001	11.182	1146
187	30.126	30.637		0.16	0.17	1.33	1.12	0.26	81	81	68	1.94	1.50	97	0.014	100	102	83.9	0.29	1.17		102.9	156.7	149.7	53.4	156.3	274	72	73	68		1.001	9.729	1002
188	30.288	30.804		0.16	0.17	1.33	1.12	0.26	81	81	68	1.93	1.50	98	0.014	101	102	83.5	0.44	1.23		103.2	156.8	149.7	53.4	156.6	281	73	73	68		1.001	10.215	1056
189	30.449	30.970		0.16	0.17	1.33	1.12	0.26	81	81	68	1.94	1.50	99	0.015	97	98	83.1	0.43	1.24		103.5	157.2	149.9	53.4	156.9	288	73	73	68		1.001	10.376	1075
190	30.611	31.136		0.16	0.17	1.33	1.12	0.26	81	81	68	1.95	1.50	100	0.015	97	99	82.6	0.50	1.30		103.7	157.3	150.1	53.3	157.0	294	73	74	68		1.001	10.860	1127
191	30.772	31.302		0.16	0.17	1.33	1.12	0.26	81	81	68	1.95	1.50	101	0.014	100	102	82.0	0.54	1.26		104.0	157.8	150.5	53.3	157.4	299	73	74	68		1.001	10.538	1098
192	30.933	31.467		0.16	0.16	1.33	1.11	0.26	81	81	68	1.93	1.50	102	0.014	100	102	81.7	0.30	1.30		104.5	158.2	150.9	53.3	157.8	304	73	74	68		1.001	10.863	1137
193	31.095	31.633		0.16	0.17	1.33	1.12	0.26	81	81	68	1.93	1.50	103	0.013	105	106	81.2	0.52	1.26		104.9	158.5	151.2	53.3	158.2	308	74	74	68		1.001	10.535	1106
194	31.256	31.798		0.16	0.16	1.33	1.12	0.26	81	81	68	1.95	1.50	103	0.014	100	102	80.9	0.30	1.28		105.4	159.0	151.7	53.3	158.7	312	74	74	68		1.001	10.700	1129
195	31.417	31.964		0.16	0.17	1.33	1.11	0.26	81	81	69	1.94	1.50	104	0.013	104	106	80.4	0.47	1.28		105.8	159.4	151.9	53.3	159.1	315	74	75	69		1.001	10.701	1133
196	31.578	32.129		0.16	0.16	1.33	1.12	0.26	81	81	69	1.94	1.50	104	0.014	100	102	80.0	0.43	1.26		106.2	159.9	152.3	53.2	159.5	318	74	75	69		1.001	10.537	1121
197	31.739	32.295		0.16	0.17	1.33	1.12	0.26	81	81	68	1.94	1.50	105	0.014	101	102	79.5	0.55	1.24		107.1	160.6	153.1	53.2	160.3	320	75	75	68		1.001	10.367	1112
198	31.900	32.460		0.16	0.16	1.33	1.12	0.26	81	81	68	1.96	1.60	105	0.014	101	102	79.1	0.38	1.26		107.5	161.2	153.6	53.2	160.7	321	75	75	68		1.001	10.538	1134
199	32.061	32.626		0.16	0.17	1.33	1.11	0.26	81	81	69	1.96	1.60	105	0.013	104	106	78.6	0.46	1.26		108.1	161.5	154.0	53.1	161.2	321	75	75	69		1.001	10.545	1141
200	32.222	32.792		0.16	0.17	1.33	1.11	0.26	81	81	69	1.94	1.60	105	0.014	101	102	78.1	0.49	1.28		108.5	161.9	154.3	53.1	161.6	321	75	75	69		1.001	10.695	1162
201	32.383	32.956		0.16	0.16	1.33	1.11	0.26	81	81	69	1.95	1.60	106	0.015	97	98	77.7	0.45	1.27		109.2	162.8	155.1	53.1	162.3	320	75	76	69		1.001	10.597	1159
202	32.544	33.121		0.16	0.16	1.33	1.10	0.26	81	81	69	1.96	1.60	106	0.014	101	102	77.2	0.50	1.25		109.6	163.2	156.0	53.1	162.7	319	75	76	69		1.001	10.405	1142
203	32.705	33.286		0.16	0.16	1.33	1.10	0.26	81	81	68	1.96	1.60	106	0.014	101	102	77.0	0.19	1.24		110.2	163.8	156.0	53.2	163.5	319	75	76	68		1.001	10.313	1138
204	32.866	33.451		0.16	0.16	1.33	1.11	0.26	81	81	68	1.94	1.60	106	0.014	101	102	76.5	0.51	1.34		110.5	164.1	156.3	53.3	163.8	319	75	76	68		1.001	11.176	1237
205	33.027	33.616		0.16	0.16	1.33	1.11	0.26	81	81	68	1.94	1.60	106	0.012	109	110	75.9	0.61	1.30		111.1	164.9	157.0	53.4	164.5	318	75	76	68		1.001	10.862	1208
206	33.188	33.781		0.16	0.16	1.33	1.11	0.26	81	81	68	1.94	1.60	106	0.013	104	106	75.5	0.38	1.24		111.1	165.0	157.2	53.5	164.6	318	75	76	68		1.001	10.371	1154
207	33.348	33.945		0.16	0.16	1.33	1.11	0.26	81	81	68	1.96	1.60	106	0.014	100	101	74.9	0.55	1.26		111.7	165.8	157.8	53.6	165.3	318	76	76	68		1.001	10.536	1178
208	33.509	34.111		0.16	0.17	1.32	1.10	0.26	81	81	68	1.97	1.60	106	0.013	104	106	74.8	0.14	1.26		112.0	166.2	158.2	53.7	165.7	318	76	76	68		1.001	10.529	1181
209	33.670	34.275		0.16	0.16	1.33	1.10	0.26	81	81	68	1.97	1.60	107	0.014	101	101	74.0	0.80	1.28		112.4	166.6	158.6	53.8	166.2	331	76	77	68		1.001	10.697	1204
210	33.831	34.439		0.16	0.16	1.32	1.10	0.26	81	81	68	1.97	1.60	108	0.015	97	98	73.4	0.57	1.28		113.0	167.3	159.2	53.9	166.8	343	77	77	68		1.001	10.692	1209
211	33.992	34.603		0.16	0.16	1.32	1.10	0.26	81	81	68	1.97	1.60	108	0.014	101	101	72.5	0.94	1.21		113.7	168.0	159.8	53.8	167.6	349	77	77	68		1.001	10.048	1144
212	34.153	34.767		0.16	0.16	1.31	1.10	0.26	81	81	68	1.98	1.60	109	0.015	97	98	72.2	0.31	1.32		114.4	168.7	160.4	53.8	168.2	353	77	77	68		1.001	11.021	1262
213	34.313	34.931		0.16	0.16	1.32	1.09	0.26	81	81	68	1.98	1.60	110	0.015	97	98	71.7	0.51	1.30		115.4	169.5	161.4	53.8	169.2	355	77	78	68		1.001	10.858	1255
214	34.473	35.095		0.16	0.16	1.32	1.09	0.26	81	81	68	1.96	1.60	110	0.014	100	102	71.1	0.58	1.26		116.3	170.6	162.2	53.7	170.0	357	77	78	68		1.001	10.532	1226
215	34.634	35.260		0.16	0.16	1.32	1.09	0.26	81	81	68	1.98	1.60	110	0.013	105	106	70.5	0.56	1.32		117.3	171.5	163.1	53.6	170.9	358	77	78	68		1.001	11.019	1294
216	34.794	35.422		0.16	0.16	1.32	1.09	0.26	81	81	68	1.96	1.60	110	0.015	97	97	69.8	0.77	1.26		118.1	172.2	163.9	53.6	171.7	360	77	78	68		1.001	10.530	1245
217	34.954	35.585		0.16	0.16	1.31	1.08	0.26	81	81	68	1.98	1.60	111	0.013	104	105	69.3	0.44	1.26		118.7	172.8	164.3	53.6	172.3	361	78	78	68		1.001	10.532	1252
218	35.115	35.748		0.16	0.16	1.31	1.08	0.26	81	81	68	1.97	1.60	111	0.014	101	101	68.8	0.59	1.24		119.7	173.5	165.0	53.5	173.2	363	78	78	68		1.001	10.369	1243
219	35.275	35.911		0.16	0.16	1.32	1.08	0.26	81	81	68	1.98	1.60	112	0.014	101	101	68.3	0.46	1.24		120.5	174.3	165.7	53.4	173.9	366	78	78	68		1.001	10.373	1251
220	35.435	36.074		0.16	0.16	1.32	1.07	0.26	81	81	68	1.98	1.60	113	0.015	97	98	67.8	0.45	1.26		121.4	175.2	166.6	53.4	174.8	368	78	78	68		1.001	10.535	1281
221	35.595	36.235		0.16	0.16	1.31	1.07	0.26	81	81	68	1.97	1.70	113	0.014	101	100	67.3	0.53	1.22		121.8	175.9	166.9	53.4	175.2	370	78	78	68		1.001	10.210	1245
222	35.755	36.397		0.16	0.16	1.31	1.07	0.26	81	81	68	1.98	1.70	113	0.015	97	97	66.8	0.46	1.22		122.8	176.8	167.9	53.4	176.2	371	78	78	68		1.001	10.209	1255
223	35.915	36.559		0.16	0.16	1.32	1.07	0.26	81	81	68	1.99	1.70	113	0.014	101	101	66.2	0.65	1.26		123.9	177.8	168.9	53.4	177.3	372	78	78	68		1.001	10.532	1306
224	36.075	36.722		0.16	0.16	1.32	1.07	0.26	81	81	68	1.97	1.70	113	0.014	101	101	65.6	0.55	1.22		124.4	178.3	169.4	53.4	177.8	374	78	78	68		1.001	10.209	1272
225	36.236	36.883		0.16	0.16	1.32	1.07	0.26	81	80	68	1.99	1.70	114	0.014	101	100	65.1	0.51	1.26		125.1	179.1	170.0	53.4	178.5	375	78	78	68		1.001	10.533	1319
226	36.396	37.045		0.16	0.16	1.32	1.07	0.26	81	81	68	1.98	1.70	114	0.015	97	97	64.8	0.31	1.24		126.0	179.8	170.7	53.4	179.3	376	78	78	68		1.001	10.364	1307
227	36.556	37.206		0.16	0.16	1.32	1.06	0.26	81	81	68	1.98	1.70	114	0.014	101	100	64.3	0.57	1.24		126.5	180.4	171.4	53.4	179.9	376	78	78	68		1.001	10.376	1315
228	36.716	37.368		0.16	0.16	1.32	1.06	0.26	81	81	68	1.96	1.70	96	0.015	96	96	64.0	0.30	1.24		127.8	181.8	172.9	53.3	181.1	351	78	78	68		1.001	10.371	1327
229	36.877	37.529		0.16	0.16	1.32	1.06	0.26	81	81	68	1.97	1.70	88	0.013	103	102	63.7	0.28	1.26		128.1	181.8	172.9	53.3	181.4	321	77	77	68		1.001	10.509	1348
230	37.038	37.691		0.16	0.16	1.31	1.04	0.26	81	81	68	1.97	1.70	84	0.015	95	95	63.5	0.21	0.92		128.2	182.4	176.1	53.4	181.6	303	76	76	68		1.001	7.666	984
231	37.199	37.852		0.16	0.16	1.31	1.04	0.26	81	80	68	1.96	1.70	82	0.013	102	101	63.4	0.06	0.69		128.9	182.6	176.6	53.4	182.3	289	75	75	68		1.001	7.421	957
232	37.360	38.013		0.16	0.16	1.32	1.04	0.26	81	80	68	1.96	1.70	80	0.014	98	97	63.5	-0.05	1.05		128.8	182.5	175.2	53.5	182.2	278	74	74	68		1.001	8.749	1128
233	37.521	38.173		0.16	0.16	1.31	1.05	0.26	81	80	68	1.96	1.70	79	0.013	102	100	63.3	0.21	1.09		128.2	182.0	174.8	53.6	181.8	267	73	73	68		1.001	9.075	1164
234	37.682	38.335		0.16	0.16	1.32	1.06	0.26	81	81	68	1.95	1.70	79	0.014	98	98	63.1	0.18	1.03		127.9	181.8	174.6	53.6	181.5	259	73	73	68		1.001	8.590	1100
235	37.843	38.498		0.16	0.16	1.32	1.07	0.26	81	81	68	1.95	1.60	78	0.014	98	98	63.3	-0.20	1.07		127.8	181.7	174.5	53.6	181.4	251	72	73	68		1.001	8.913	1140

Elapsed Time	Particulate Sampling Data																	Fuel Weight, lb		Flow, gpm		Temperature Data, oF												
	Gas Meter Cubic Feet (1)	Gas Meter Cubic Feet (2)	Gas Meter Cubic Feet (amb)	Sample Rate, cfm (1)	Sample Rate, cfm (2)	Orifice dH (1)	Orifice dH (2)	Orifice dH (amb)	Meter oF (1)	Meter oF (2)	Meter oF (amb)	Meter Vac. in. Hg. (1)	Meter Vac. in. Hg. (2)	Dilution Tunnel Temp.	Dilution Tunnel dP	Pro. Rate (%) (1)	Pro. Rate (%) (2)	Scale Reading	Weight Change	Load Side Liquid Flow Rate	Boiler Side Liquid Flow Rate (optional)	Thermopile ΔT	Boiler to Heat Exch. Temp.	Heat Exch to Boiler Temp.	Inlet Load Temp.	Outlet Load Temp.	Stack	Filter (1)	Filter (2)	Ambient		Specific Heat of Inlet Water (BTU/lb-°F)	Mass Flow Rate of Inlet Water (lb/min)	Heat Output, Btu
236	38.004	38.660		0.16	0.16	1.32	1.07	0.26	81	81	68	1.95	1.60	77	0.014	98	97	63.1	0.17	1.07		127.7	181.5	174.3	53.6	181.3	244	71	73	68		1.001	8.918	1140
237	38.165	38.823		0.16	0.16	1.32	1.07	0.26	81	81	68	1.96	1.60	77	0.014	98	98	63.1	0.06	1.05		127.4	181.1	174.0	53.6	181.0	238	71	72	68		1.001	8.750	1116
238	38.326	38.986		0.16	0.16	1.32	1.08	0.26	81	81	68	1.95	1.60	77	0.013	102	102	63.2	-0.10	1.09		126.9	180.9	173.6	53.6	180.5	232	71	72	68		1.001	9.075	1153
239	38.487	39.149		0.16	0.16	1.32	1.09	0.26	81	81	68	1.94	1.60	76	0.015	95	95	63.0	0.11	1.05		126.8	180.5	173.3	53.6	180.3	226	71	72	68		1.001	8.754	1111
240	38.648	39.314		0.16	0.16	1.32	1.08	0.26	81	81	68	1.96	1.60	75	0.014	98	99	63.1	-0.03	1.05		126.4	180.2	173.0	53.5	180.0	224	70	72	68		1.001	8.759	1109
241	38.810	39.478		0.16	0.16	1.32	1.09	0.26	81	81	68	1.95	1.60	74	0.015	95	95	63.0	0.11	1.05		126.1	180.1	172.6	53.5	179.7	222	70	72	68		1.001	8.755	1106
242	38.971	39.642		0.16	0.16	1.32	1.10	0.26	81	81	68	1.94	1.60	74	0.015	94	95	63.0	-0.04	1.11		125.8	179.7	172.3	53.5	179.3	218	70	72	68		1.001	9.237	1163
243	39.132	39.807		0.16	0.16	1.31	1.10	0.26	81	80	68	1.94	1.60	73	0.014	98	99	63.0	0.03	1.07		125.5	179.3	172.1	53.6	179.1	214	70	71	68		1.001	8.925	1122
244	39.293	39.971		0.16	0.16	1.32	1.10	0.26	81	80	68	1.95	1.60	73	0.014	98	99	63.1	-0.12	1.07		124.9	178.7	171.6	53.5	178.5	210	70	71	68		1.001	8.907	1114
245	39.455	40.137		0.16	0.17	1.32	1.10	0.26	81	81	68	1.94	1.50	73	0.014	98	100	63.1	0.01	1.07		124.6	178.6	171.3	53.5	178.1	206	70	71	68		1.001	8.898	1110
246	39.616	40.302		0.16	0.16	1.32	1.11	0.26	81	81	68	1.93	1.50	73	0.014	98	99	63.1	-0.01	1.05		124.4	178.2	171.0	53.5	177.9	202	70	71	68		1.001	8.757	1091
247	39.777	40.468		0.16	0.17	1.32	1.11	0.26	81	81	68	1.93	1.50	73	0.014	98	100	63.0	0.08	1.05		123.9	177.5	170.4	53.5	177.3	198	70	71	68		1.001	8.753	1086
248	39.938	40.634		0.16	0.17	1.32	1.11	0.26	81	80	68	1.95	1.50	73	0.014	98	100	63.0	0.06	1.03		123.5	177.2	170.0	53.4	176.9	194	70	71	68		1.001	8.592	1062
249	40.100	40.800		0.16	0.17	1.32	1.12	0.26	81	80	68	1.94	1.50	73	0.014	98	100	63.0	-0.06	1.01		123.3	176.9	170.3	53.4	176.7	190	70	71	68		1.001	8.433	1041
250	40.261	40.965		0.16	0.17	1.32	1.12	0.26	81	80	68	1.93	1.50	72	0.013	101	103	63.0	-0.02	1.01		122.8	176.5	169.5	53.5	176.3	187	70	71	68		1.001	8.427	1036
251	40.422	41.131		0.16	0.17	1.32	1.11	0.26	81	80	68	1.95	1.50	72	0.015	94	96	63.0	0.01	0.99		122.4	176.2	169.3	53.5	175.9	183	70	70	68		1.001	8.266	1013
252	40.583	41.297		0.16	0.17	1.32	1.12	0.26	81	80	68	1.94	1.50	72	0.013	101	103	63.1	-0.05	1.09		121.8	175.7	168.8	53.6	175.4	180	70	70	68		1.001	9.079	1107
253	40.745	41.463		0.16	0.17	1.32	1.12	0.26	81	80	68	1.94	1.50	72	0.014	98	100	63.0	0.06	1.07		121.2	175.0	168.3	53.7	174.9	177	69	70	68		1.001	8.916	1082
254	40.906	41.629		0.16	0.17	1.32	1.12	0.26	81	80	68	1.93	1.50	72	0.014	98	100	63.0	0.04	1.07		120.6	174.7	167.9	53.8	174.4	174	69	70	68		1.001	8.915	1077
255	41.067	41.795		0.16	0.17	1.33	1.12	0.26	81	80	68	1.95	1.50	72	0.015	94	96	63.2	-0.21	1.07		120.1	174.2	167.5	53.9	174.1	171	69	70	68		1.001	8.916	1072
256	41.229	41.961		0.16	0.17	1.32	1.12	0.26	81	80	68	1.94	1.50	72	0.013	102	103	63.2	-0.06	1.05		119.5	173.7	167.1	54.0	173.5	168	69	70	68		1.001	8.755	1048
257	41.390	42.127		0.16	0.17	1.32	1.12	0.26	81	80	68	1.93	1.50	72	0.014	98	100	63.1	0.12	1.03		118.8	173.2	166.5	54.1	172.9	166	69	70	68		1.001	8.593	1022
258	41.551	42.293		0.16	0.17	1.33	1.11	0.26	81	80	68	1.93	1.50	72	0.013	101	103	63.1	0.04	1.03		118.3	172.7	166.0	54.1	172.4	163	69	70	68		1.001	8.596	1018
259	41.713	42.460		0.16	0.17	1.33	1.12	0.26	81	80	68	1.93	1.50	71	0.012	106	108	62.9	0.13	1.22		117.6	171.8	164.0	54.1	171.7	161	69	70	68		1.001	10.208	1202
260	41.874	42.626		0.16	0.17	1.32	1.12	0.26	81	80	68	1.94	1.50	71	0.014	97	100	63.2	-0.22	1.26		116.8	171.1	163.3	54.1	170.9	158	69	70	68		1.001	10.530	1232
261	42.036	42.793		0.16	0.17	1.33	1.12	0.26	81	80	68	1.94	1.50	71	0.014	98	100	63.2	0.00	1.01		116.4	170.7	162.9	54.0	170.4	156	69	69	68		1.001	8.445	985
262	42.197	42.959		0.16	0.17	1.33	1.12	0.26	81	80	68	1.93	1.50	71	0.013	101	103	63.2	0.00	1.06		116.5	170.7	163.9	53.9	170.4	153	69	69	68		1.001	8.859	1033
263	42.359	43.126		0.16	0.17	1.32	1.12	0.26	81	80	67	1.93	1.50	71	0.014	98	100	63.2	-0.02	1.06		116.1	170.4	163.6	53.9	170.0	151	69	69	67		1.001	8.864	1030
264	42.520	43.291		0.16	0.16	1.33	1.12	0.26	81	80	68	1.94	1.5	71	0.015	94	96	63.2	0.01	1.05		115.9	170.0	163.3	53.9	169.7	149	69	69	68		1.001	8.776	1018
265	42.682	43.458		0.16	0.17	1.33	1.12	0.26	81	80	68	1.94	1.5	71	0.014	98	100	63.2	-0.05	1.07		115.2	169.3	162.7	53.8	169.0	147	69	69	68		1.001	8.917	1028
266	42.844	43.624		0.16	0.17	1.32	1.11	0.26	81	80	68	1.94	1.5	71	0.015	95	96	63.1	0.15	1.09		114.8	168.9	162.3	53.8	168.6	145	69	69	68		1.001	9.076	1044
267	43.005	43.790		0.16	0.17	1.33	1.12	0.26	81	80	67	1.92	1.5	71	0.013	101	103	63.1	-0.07	1.11		114.4	168.3	161.8	53.7	168.1	143	69	69	67		1.001	9.239	1058
268	43.167	43.957		0.16	0.17	1.33	1.12	0.26	81	80	68	1.94	1.5	71	0.014	98	100	63.1	0.02	1.01		114.1	168.0	161.4	53.7	167.8	141	69	69	68		1.001	8.433	963
269	43.328	44.123		0.16	0.17	1.33	1.12	0.26	81	80	67	1.92	1.5	71	0.013	101	103	63.2	-0.07	1.07		113.5	167.5	160.9	53.7	167.2	139	69	69	67		1.001	8.916	1013
270	43.490	44.289		0.16	0.17	1.32	1.12	0.26	81	80	68	1.93	1.5	79	0.013	103	104	63.1	0.11	1.11		113.1	167.1	160.6	53.7	166.8	156	69	70	68		1.001	9.237	1046
271	43.651	44.455		0.16	0.17	1.33	1.12	0.26	81	80	67	1.93	1.5	82	0.012	106	109	62.8	0.27	1.05		112.7	166.5	160.1	53.7	166.4	180	69	70	67		1.001	8.753	987
272	43.813	44.621		0.16	0.17	1.33	1.12	0.26	81	80	67	1.93	1.5	74	0.013	102	104	62.8	0.00	1.09		112.1	166.0	159.5	53.7	165.8	169	69	69	67		1.001	9.082	1019
273	43.974	44.788		0.16	0.17	1.33	1.12	0.26	81	80	67	1.93	1.5	72	0.012	105	108	62.8	0.04	1.01		111.7	165.5	159.2	53.7	165.4	158	69	69	67		1.001	8.431	943
274	44.136	44.954		0.16	0.17	1.33	1.12	0.26	81	80	67	1.93	1.5	71	0.014	98	100	62.8	-0.05	1.09		111.1	165.0	158.7	53.7	164.8	150	69	69	67		1.001	9.084	1011
275	44.298	45.120		0.16	0.17	1.33	1.06	0.26	81	80	67	1.93	1.4	71	0.014	98	100	62.8	0.02	1.01		110.8	164.6	158.4	53.7	164.5	145	69	69	67		1.001	8.435	936
276	44.459	45.282		0.16	0.16	1.33	1.06	0.26	81	80	67	1.93	1.4	71	0.014	97	97	62.8	-0.06	1.24		110.0	163.8	156.6	53.7	163.6	141	69	69	67		1.001	10.368	1142
277	44.621	45.443		0.16	0.16	1.33	1.06	0.26	81	80	67	1.94	1.4	71	0.015	95	93	62.9	-0.01	1.24		109.1	163.0	155.6	53.6	162.7	139	68	69	67		1.001	10.370	1133
278	44.783	45.605		0.16	0.16	1.33	1.06	0.26	81	80	67	1.92	1.4	71	0.015	95	94	62.8	0.08	1.21		108.7	162.4	155.2	53.6	162.2	136	68	69	67		1.001	10.053	1094
279	44.945	45.767		0.16	0.16	1.32	1.06	0.26	81	80	67	1.92	1.4	71	0.014	98	97	62.9	-0.10	1.21		108.5	162.2	155.0	53.5	162.0	134	68	69	67		1.001	10.097	1096
280	45.106	45.929		0.16	0.16	1.33	1.06	0.26	81	80	67	1.92	1.4	70	0.012	105	105	62.8	0.06	1.17		108.1	161.7	154.5	53.5	161.5	132	68	69	67		1.001	9.762	1056
281	45.268	46.090		0.16	0.16	1.33	1.05	0.26	81	80	67	1.93	1.5	79	0.014	99	97	62.7	0.12	1.26		107.3	160.9	153.8	53.4	160.7	158	69	69	67		1.001	10.521	1130
282	45.429	46.251		0.16	0.16	1.33	1.05	0.26	81	80	67	1.93	1.5	82	0.014	98	98	62.6	0.07	1.21		106.6	160.2	153.1	53.4	160.0	180	69	69	67		1.001	10.056	1074
283	45.590	46.413		0.16	0.16	1.33	1.05	0.26	81	80	67	1.93	1.5	83	0.014	99	98	62.3	0.31	1.24		106.1	159.7	152.6	53.4	159.5	195	69	69	67		1.001	10.377	1102
284	45.752	46.575		0.16	0.16	1.33	1.05	0.26	81	80	67	1.93	1.5	85	0.014	99	98	62.2	0.09	1.26		105.8	159.4	152.2	53.4	159.1	208	69	69	67		1.001	10.540	1116
285	45.914	46.736		0.16	0.16	1.33	1.06	0.26	81	80	67	1.93	1.5	86	0.014	99	98	61.9	0.32	1.28		105.3	158.8	151.7	53.3	158.6	218	69	70	67		1.001	10.704	1128
286	46.075	46.897		0.16	0.16	1.34	1.06	0.26	81	80	67	1.93	1.5	87	0.012	107	106	62.0	-0.05	1.24		104.8	158.3	151.3	53.3	158.1	227	69	70	67		1.001	10.378	1089
287	46.237	47.060		0.16	0.16	1.34	1.06	0.26	81	80	67	1.93	1.5	88	0.014	100	99	61.6	0.35	1.22		104.4	158.0	151.0	53.3	157.8	235	70	70	67		1.001	10.212	1068
288	46.398	47.221		0.16	0.16	1.33	1.06	0.26	81	80	67	1.93	1.5	89	0.013	103	102	61.4	0.19	1.22		104.6	158.3	151.2	53.3	158.0	243	70	70	67		1.001	10.214	1070
289	46.560	47.381		0.16	0.16	1.33	1.06	0.26	81	80	67	1.94	1.5	91	0.015	97	94	61.0	0.44	1.21		104.6	158.2	151.2	53.4	158.0	252	70	70	67		1.001	10.051	1053
290	46.721	47.543		0.16	0.16	1.33	1.06	0.26	81	80	67	1.95	1.5	92	0.015	96	96	60.7	0.26	1.21		104.6	158.3	151.4	53.4	158.0	262	70	71	67		1.001	10.053	1052
291	46.882	47.704		0.16	0.16	1.33	1.05	0.26	81	80	67	1.94	1.5	94	0.014	100	99	60.4	0.29	1.32		104.6	158.4	151.3	53.5	158.2	273	70	71	67		1.001	11.022	1154
292	47.043	47.865		0.16	0.16	1.33	1.05	0.26	81	80	67	1.95	1.5	95	0.013	103	102	60.0	0.40	1.26		104.6	158.7	151.5	53.7	158.3	282	71	71	67		1.001	10.534	1104
293	47.205	48.026		0.16	0.16	1.33	1.06	0.26	81	80	67	1.95	1.5	96	0.014	100	99	59.6	0.46	1.23		105.0	159.2	152.0	53.8	158.8	290	71	71	67		1.001	10.214	1074
294	47.366	48.188		0.16	0.16	1.32	1.05	0.26	81	80	67	1.94	1.5	98	0.014	100	100	59.2	0.40	1.22		105.2	159.4	152.2	53.8	159.1	296	71	71	67		1.001	10.212	1076
295	47.527	48.348		0.16	0.16	1.32	1.05	0.26	81	80	67	1.96	1.5	98	0.015	97	95	58.8	0.36	1.24		105.6	159.8	152.6	53.9	159.5	302	71	72	67		1.001	10.372	1097
296	47.688	48.508		0.16	0.16	1.33	1.05	0.26	81	80	67	1.96	1.5	99	0.014	100	98	58.5	0.33	1.24		105.9	160.2	152.9	53.9	159.8	308	72	72	67		1.001	10.373	1100
297	47.849	48.669		0.16	0.16	1.33	1.05	0.26	81	80	67	1.95	1.5	101	0.014	100	99	58.0	0.52	1.26		106.3	160.7	153.2	54.0	160.3	314	72	72	67		1.001	10.536	1121

Elapsed Time	Particulate Sampling Data																	Fuel Weight, lb		Flow, gpm		Temperature Data, oF												
	Gas Meter Cubic Feet (1)	Gas Meter Cubic Feet (2)	Gas Meter Cubic Feet (amb)	Sample Rate, cfm (1)	Sample Rate, cfm (2)	Orifice dH (1)	Orifice dH (2)	Orifice dH (amb)	Meter oF (1)	Meter oF (2)	Meter oF (amb)	Meter Vac. in. Hg. (1)	Meter Vac. in. Hg. (2)	Dilution Tunnel Temp.	Dilution Tunnel dP	Pro. Rate (%) (1)	Pro. Rate (%) (2)	Scale Reading	Weight Change	Load Side Liquid Flow Rate	Boiler Side Liquid Flow Rate (optional)	Thermopile ΔT	Boiler to Heat Exch. Temp.	Heat Exch to Boiler Temp.	Inlet Load Temp.	Outlet Load Temp.	Stack	Filter (1)	Filter (2)	Ambient		Specific Heat of Inlet Water (BTU/lb-°F)	Mass Flow Rate of Inlet Water (lb/min)	Heat Output, Btu
298	48.010	48.830		0.16	0.16	1.33	1.04	0.26	81	80	67	1.97	1.5	102	0.015	97	96	57.6	0.39	1.22		107.1	161.5	154.0	54.0	161.0	320	72	72	67		1.001	10.207	1094
299	48.170	48.990		0.16	0.16	1.33	1.04	0.26	80	80	67	1.95	1.5	103	0.012	108	107	57.1	0.45	1.24		107.5	161.8	154.4	54.0	161.5	323	72	73	67		1.001	10.367	1116
300	48.331	49.150		0.16	0.16	1.33	1.05	0.26	80	80	67	1.96	1.5	103	0.014	101	99	56.6	0.48	1.21		108.6	162.9	155.7	53.8	162.4	325	72	73	67		1.001	10.050	1093
301	48.492	49.311		0.16	0.16	1.33	1.04	0.26	80	80	67	1.96	1.5	103	0.013	104	103	56.5	0.19	1.22		109.0	163.2	155.7	53.8	162.8	326	73	73	67		1.001	10.211	1114
302	48.653	49.471		0.16	0.16	1.33	1.04	0.26	80	80	67	1.96	1.5	103	0.013	104	102	55.9	0.53	1.23		109.6	163.7	156.1	53.8	163.3	328	73	73	67		1.001	10.245	1124
303	48.814	49.631		0.16	0.16	1.33	1.04	0.26	80	80	67	1.95	1.5	104	0.013	104	103	55.7	0.27	1.24		110.2	164.3	156.7	53.7	163.9	328	73	73	67		1.001	10.358	1143
304	48.975	49.792		0.16	0.16	1.33	1.04	0.26	80	80	67	1.96	1.5	104	0.014	101	99	55.0	0.61	1.24		111.1	165.1	157.5	53.6	164.7	329	73	73	67		1.001	10.374	1154
305	49.135	49.951		0.16	0.16	1.33	1.04	0.26	80	80	67	1.97	1.5	105	0.014	100	98	54.8	0.27	1.21		111.6	165.6	158.0	53.6	165.2	330	73	73	67		1.001	10.051	1124
306	49.296	50.111		0.16	0.16	1.33	1.04	0.26	80	80	67	1.97	1.5	105	0.013	105	103	54.1	0.63	1.26		112.3	166.2	158.5	53.5	165.8	332	73	74	67		1.001	10.532	1185
307	49.457	50.272		0.16	0.16	1.33	1.04	0.26	80	80	67	1.96	1.5	105	0.014	101	100	53.9	0.27	1.19		113.0	166.9	159.1	53.5	166.5	334	73	74	67		1.001	9.886	1119
308	49.617	50.431		0.16	0.16	1.33	1.04	0.26	80	80	67	1.96	1.5	105	0.014	100	98	53.5	0.41	1.21		113.7	167.6	159.7	53.4	167.1	335	73	74	67		1.001	10.049	1144
309	49.778	50.590		0.16	0.16	1.33	1.04	0.26	80	80	67	1.96	1.5	105	0.014	101	98	52.9	0.56	1.22		114.4	168.3	160.5	53.4	167.8	335	73	74	67		1.001	10.207	1170
310	49.939	50.751		0.16	0.16	1.33	1.04	0.26	80	80	67	1.96	1.5	105	0.013	105	103	52.6	0.32	1.28		115.2	169.1	161.1	53.3	168.6	336	74	74	67		1.001	10.696	1234
311	50.100	50.910		0.16	0.16	1.32	1.04	0.26	80	80	67	1.98	1.5	106	0.014	101	98	52.1	0.49	1.03		115.6	169.4	162.5	53.3	168.9	338	74	74	67		1.001	8.594	995
312	50.260	51.069		0.16	0.16	1.32	1.04	0.26	80	80	67	1.98	1.5	107	0.013	104	102	51.7	0.38	1.03		116.5	170.3	163.6	53.3	169.8	344	74	74	67		1.001	8.592	1002
313	50.420	51.229		0.16	0.16	1.32	1.03	0.26	80	80	67	1.98	1.5	108	0.012	108	107	51.2	0.54	1.03		117.7	171.5	164.8	53.4	171.1	347	74	75	67		1.001	8.592	1013
314	50.580	51.387		0.16	0.16	1.32	1.03	0.26	80	80	67	1.99	1.5	107	0.013	104	102	50.6	0.63	0.99		118.4	172.2	165.4	53.4	171.8	349	74	75	67		1.001	8.267	980
315	50.740	51.547		0.16	0.16	1.31	1.03	0.26	80	80	67	1.98	1.5	108	0.014	100	99	50.2	0.31	1.05		119.2	173.1	166.3	53.4	172.6	351	74	75	67		1.001	8.754	1045
316	50.901	51.706		0.16	0.16	1.31	1.02	0.26	80	80	67	1.99	1.5	108	0.012	109	106	49.7	0.52	1.09		120.4	174.3	167.5	53.4	173.8	351	74	75	67		1.001	9.079	1094
317	51.060	51.864		0.16	0.16	1.31	1.03	0.26	80	80	67	1.98	1.5	108	0.013	104	102	49.4	0.35	1.05		120.9	174.8	168.1	53.4	174.4	351	74	75	67		1.001	8.756	1060
318	51.221	52.024		0.16	0.16	1.32	1.02	0.26	80	80	67	1.98	1.5	108	0.015	98	96	48.9	0.46	1.05		121.6	175.5	168.7	53.4	175.0	351	75	75	67		1.001	8.758	1066
319	51.382	52.185		0.16	0.16	1.34	1.07	0.26	80	80	67	2.01	1.6	108	0.013	105	104	48.3	0.61	1.05		122.5	176.5	169.6	53.4	176.0	352	75	75	67		1.001	8.756	1074
320	51.544	52.347		0.16	0.16	1.34	1.07	0.26	80	80	67	2.02	1.6	109	0.014	102	101	47.9	0.42	1.04		123.1	177.1	170.1	53.5	176.6	353	75	75	67		1.001	8.654	1067
321	51.706	52.509		0.16	0.16	1.34	1.07	0.26	80	80	67	2.01	1.6	109	0.014	102	101	47.6	0.24	1.04		124.0	177.9	170.9	53.5	177.5	354	75	75	67		1.001	8.679	1077
322	51.867	52.672		0.16	0.16	1.34	1.07	0.26	80	80	67	2.01	1.6	109	0.013	105	105	47.2	0.49	1.03		124.5	178.5	171.5	53.5	178.0	357	75	75	67		1.001	8.594	1071
323	52.029	52.833		0.16	0.16	1.34	1.06	0.26	80	80	67	2.03	1.6	110	0.014	102	100	46.6	0.57	1.05		125.6	179.5	172.7	53.5	179.1	360	75	75	67		1.001	8.758	1102
324	52.191	52.994		0.16	0.16	1.34	1.06	0.26	80	80	67	2.03	1.6	110	0.013	106	104	46.1	0.50	1.05		126.1	180.1	173.1	53.6	179.7	363	75	76	67		1.001	8.752	1105
325	52.352	53.155		0.16	0.16	1.34	1.06	0.26	80	80	67	2.03	1.6	110	0.014	101	100	45.6	0.51	1.01		126.9	181.1	173.9	53.7	180.5	365	75	76	67		1.001	8.429	1071
326	52.514	53.317		0.16	0.16	1.34	1.06	0.26	80	80	67	2.02	1.6	92	0.013	104	103	45.3	0.32	1.03		127.8	182.0	175.0	53.8	181.6	335	74	75	67		1.001	8.592	1100
327	52.675	53.478		0.16	0.16	1.34	1.05	0.26	80	80	67	2.02	1.6	85	0.014	99	98	45.1	0.18	1.03		128.1	182.4	175.3	53.9	182.0	309	74	74	67		1.001	8.592	1102
328	52.837	53.640		0.16	0.16	1.34	1.06	0.26	80	80	67	2	1.6	82	0.013	103	102	44.8	0.24	1.01		127.8	182.0	174.9	54.1	181.9	293	73	73	67		1.001	8.428	1078
329	52.999	53.801		0.16	0.16	1.33	1.06	0.26	80	80	67	2	1.6	79	0.014	99	97	44.8	0.02	1.07		127.8	182.2	175.3	54.2	182.0	280	72	73	67		1.001	8.913	1141
330	53.161	53.964		0.16	0.16	1.34	1.06	0.26	80	80	67	2.02	1.6	78	0.012	107	106	44.7	0.11	1.07		127.6	182.2	175.0	54.2	181.8	269	72	72	67		1.001	8.917	1139
331	53.324	54.125		0.16	0.16	1.34	1.07	0.26	80	80	67	2.01	1.6	77	0.013	103	101	44.7	0.04	1.09		127.4	182.1	174.9	54.3	181.7	260	71	72	67		1.001	9.077	1158
332	53.486	54.287		0.16	0.16	1.34	1.07	0.26	80	80	67	2.01	1.6	77	0.014	99	98	44.6	0.11	1.03		127.2	181.8	174.7	54.3	181.4	252	70	72	67		1.001	8.589	1094
333	53.648	54.450		0.16	0.16	1.34	1.07	0.26	80	80	67	1.99	1.6	76	0.013	102	102	44.6	-0.06	1.05		126.9	181.5	174.5	54.3	181.2	244	70	72	67		1.001	8.751	1112
334	53.810	54.614		0.16	0.16	1.34	1.08	0.26	80	80	67	1.99	1.6	75	0.013	102	102	44.6	0.03	1.09		126.8	181.5	174.3	54.3	181.1	238	70	72	67		1.001	9.061	1150
335	53.972	54.776		0.16	0.16	1.34	1.07	0.26	80	80	67	2	1.6	75	0.013	102	101	44.4	0.16	1.03		126.6	181.1	174.2	54.2	180.8	232	70	71	67		1.001	8.629	1093
336	54.134	54.939		0.16	0.16	1.34	1.08	0.26	80	80	67	1.99	1.60	76	0.013	102	102	44.7	-0.22	1.07		126.2	180.6	173.8	54.2	180.4	226	70	71	67		1.001	8.923	1128
337	54.297	55.102		0.16	0.16	1.34	1.08	0.26	80	80	67	1.98	1.60	75	0.014	99	98	44.5	0.15	1.04		125.8	180.4	173.3	54.3	180.1	221	70	71	67		1.001	8.709	1097
338	54.459	55.265		0.16	0.16	1.34	1.08	0.26	80	80	67	1.99	1.60	74	0.016	92	92	44.4	0.07	1.05		125.5	180.2	173.2	54.4	179.9	219	70	71	67		1.001	8.755	1100
339	54.621	55.430		0.16	0.16	1.34	1.08	0.26	80	80	67	2.00	1.50	73	0.014	98	99	44.5	-0.02	1.01		125.1	179.8	173.0	54.5	179.6	216	70	71	67		1.001	8.429	1056
340	54.784	55.593		0.16	0.16	1.34	1.08	0.26	80	80	67	2.00	1.50	73	0.014	99	98	44.5	-0.06	1.03		124.3	179.2	172.3	54.6	178.9	212	69	71	67		1.001	8.595	1070
341	54.946	55.756		0.16	0.16	1.34	1.08	0.26	80	80	67	1.99	1.50	73	0.015	95	95	44.4	0.07	1.05		124.1	179.1	172.2	54.7	178.8	206	69	70	67		1.001	8.754	1088
342	55.108	55.920		0.16	0.16	1.35	1.08	0.26	80	80	68	2.00	1.50	73	0.014	98	99	44.4	0.01	1.05		123.9	178.9	172.1	54.7	178.6	203	69	70	68		1.001	8.756	1087
343	55.271	56.084		0.16	0.16	1.34	1.08	0.26	80	80	67	1.98	1.50	73	0.014	99	99	44.5	-0.01	1.05		123.4	178.4	171.6	54.7	178.2	199	69	70	67		1.001	8.755	1082
344	55.433	56.247		0.16	0.16	1.34	1.09	0.26	80	80	68	2.00	1.50	73	0.014	98	98	44.5	0.00	0.99		122.8	177.8	171.1	54.8	177.6	196	69	70	68		1.001	8.267	1016
345	55.595	56.412		0.16	0.16	1.35	1.08	0.26	80	80	68	1.98	1.50	73	0.015	95	96	44.5	-0.08	0.99		122.5	177.7	170.9	54.9	177.4	192	69	70	68		1.001	8.271	1015
346	55.757	56.575		0.16	0.16	1.35	1.08	0.26	80	80	69	1.98	1.50	75	0.014	99	98	44.5	0.04	1.05		122.1	177.2	170.5	54.9	177.0	188	69	70	69		1.001	8.757	1071
347	55.919	56.738		0.16	0.16	1.35	1.08	0.26	80	80	68	1.99	1.50	74	0.014	99	98	44.5	0.01	1.09		121.8	176.9	170.2	54.8	176.6	185	69	70	68		1.001	9.075	1107
348	56.081	56.901		0.16	0.16	1.35	1.08	0.26	80	80	68	1.99	1.50	73	0.014	98	98	44.5	-0.02	1.03		121.4	176.2	169.5	54.6	176.0	182	69	70	68		1.001	8.597	1045
349	56.243	57.065		0.16	0.16	1.35	1.08	0.26	80	80	68	2.00	1.50	73	0.013	102	102	44.5	0.02	1.07		121.3	176.0	169.3	54.4	175.8	178	69	70	68		1.001	8.908	1082
350	56.406	57.229		0.16	0.16	1.34	1.08	0.26	80	80	68	1.98	1.50	73	0.013	103	102	44.6	-0.08	1.05		120.9	175.3	168.7	54.3	175.2	175	69	70	68		1.001	8.726	1056
351	56.568	57.393		0.16	0.16	1.35	1.08	0.26	80	80	68	2.00	1.50	73	0.015	95	95	44.4	0.13	1.07		120.6	174.9	168.4	54.2	174.8	172	69	70	68		1.001	8.924	1078
352	56.730	57.556		0.16	0.16	1.34	1.08	0.26	80	80	68	1.98	1.50	73	0.013	102	102	44.6	-0.18	1.00		120.2	174.6	167.9	54.2	174.4	169	69	70	68		1.001	8.304	999
353	56.892	57.719		0.16	0.16	1.35	1.08	0.26	80	80	68	2.00	1.50	73	0.014	98	98	44.5	0.13	1.03		119.8	174.1	167.6	54.1	173.9	167	69	70	68		1.001	8.601	1032
354	57.054	57.883		0.16	0.16	1.35	1.08	0.26	80	80	68	2.00	1.50	73	0.013	102	102	44.6	-0.15	1.13		119.3	173.6	166.5	54.1	173.3	164	69	70	68		1.001	9.411	1124
355	57.217	58.046		0.16	0.16	1.35	1.08	0.26	80	80	68	2.00	1.50	73	0.013	103	102	44.6	0.06	1.15		118.7	173.0	165.9	54.0	172.7	161	69	70	68		1.001	9.564	1136
356	57.379	58.211		0.16	0.16	1.35	1.08	0.26	80	80	68	1.99	1.50	72	0.014	98	99	44.6	-0.04	1.11		118.4	172.6	165.5	54.0	172.3	159	69	70	68		1.001	9.241	1095
357	57.542	58.374		0.16	0.16	1.35	1.08	0.26	80	80	68	1.98	1.50	72	0.014	99	98	44.6	0.00	1.15		118.1	172.2	165.2	53.9	172.0	157	69	70	68		1.001	9.561	1130
358	57.704	58.537		0.16	0.16	1.35	1.08	0.26	81	80	68	1.98	1.50	72	0.014	98	98	44.5	0.07	1.09		117.2	171.4	164.4	54.0	171.2	154	69	70	68		1.001	9.082	1066
359	57.866	58.701		0.16	0.16	1.34	1.08	0.26	81	80	68	2.00	1.50	72	0.014	98	98	44.6	-0.10	1.13		116.8	171.0	164.0	54.0	170.8	152	69	70	68		1.001	9.401	1099

Elapsed Time	Particulate Sampling Data																	Fuel Weight, lb		Flow, gpm		Temperature Data, oF												
	Gas Meter Cubic Feet (1)	Gas Meter Cubic Feet (2)	Gas Meter Cubic Feet (amb)	Sample Rate, cfm (1)	Sample Rate, cfm (2)	Orifice dH (1)	Orifice dH (2)	Orifice dH (amb)	Meter oF (1)	Meter oF (2)	Meter oF (amb)	Meter Vac. in. Hg. (1)	Meter Vac. in. Hg. (2)	Dilution Tunnel Temp.	Dilution Tunnel dP	Pro. Rate (%) (1)	Pro. Rate (%) (2)	Scale Reading	Weight Change	Load Side Liquid Flow Rate	Boiler Side Liquid Flow Rate (optional)	Thermopile ΔT	Boiler to Heat Exch. Temp.	Heat Exch to Boiler Temp.	Inlet Load Temp.	Outlet Load Temp.	Stack	Filter (1)	Filter (2)	Ambient		Specific Heat of Inlet Water (BTU/lb-°F)	Mass Flow Rate of Inlet Water (lb/min)	Heat Output, Btu
360	58.029	58.864		0.16	0.16	1.34	1.08	0.26	81	80	68	1.98	1.50	72	0.014	99	98	44.6	0.01	1.09		116.2	170.5	163.6	54.1	170.4	150	69	70	68		1.001	9.078	1056
361	58.191	59.028		0.16	0.16	1.34	1.08	0.26	81	80	68	2.00	1.50	71	0.013	102	102	44.5	0.11	1.13		115.7	170.0	163.2	54.2	169.9	148	69	69	68		1.001	9.402	1089
362	58.353	59.193		0.16	0.16	1.34	1.08	0.26	81	80	68	1.98	1.50	71	0.013	102	103	44.6	-0.06	1.13		114.8	169.4	162.5	54.3	169.1	146	69	69	68		1.001	9.396	1080
363	58.515	59.356		0.16	0.16	1.34	1.08	0.26	81	80	68	1.99	1.50	71	0.014	98	98	44.7	-0.17	1.15		114.6	169.3	162.4	54.3	168.9	144	69	69	68		1.001	9.562	1097
364	58.678	59.519		0.16	0.16	1.34	1.09	0.26	81	80	68	2.00	1.50	71	0.015	95	94	44.6	0.14	1.17		114.1	168.8	161.9	54.3	168.4	142	69	69	68		1.001	9.723	1111
365	58.841	59.682		0.16	0.16	1.34	1.09	0.26	81	80	68	1.98	1.50	71	0.014	99	98	44.6	0.00	1.15		113.6	168.1	161.5	54.3	167.9	140	69	69	68		1.001	9.566	1068
366	59.003	59.846		0.16	0.16	1.34	1.09	0.26	81	80	68	1.98	1.50	71	0.014	98	98	44.7	-0.14	1.10		113.1	167.6	161.0	54.3	167.4	138	69	69	68		1.001	9.191	1041
367	59.165	60.010		0.16	0.16	1.34	1.08	0.26	81	80	68	1.98	1.50	71	0.013	102	102	44.7	0.01	1.12		112.7	167.1	160.5	54.2	166.9	137	69	69	68		1.001	9.309	1050
368	59.328	60.174		0.16	0.16	1.34	1.08	0.26	81	80	68	1.99	1.50	80	0.015	96	96	44.5	0.25	1.11		112.1	166.5	159.9	54.2	166.3	161	70	70	68		1.001	9.242	1038
369	59.490	60.337		0.16	0.16	1.34	1.08	0.26	81	80	67	1.97	1.50	80	0.013	103	102	44.4	0.07	1.13		111.6	165.9	159.3	54.1	165.7	183	69	70	67		1.001	9.390	1049
370	59.653	60.501		0.16	0.16	1.35	1.09	0.26	81	80	68	1.96	1.50	73	0.012	107	106	44.3	0.11	1.11		111.2	165.5	158.8	54.1	165.2	166	69	69	68		1.001	9.242	1028
371	59.816	60.665		0.16	0.16	1.35	1.10	0.26	81	80	67	1.96	1.50	71	0.011	111	111	44.3	-0.04	1.11		110.8	165.1	158.4	54.0	164.8	155	69	69	67		1.001	9.242	1025
372	59.979	60.830		0.16	0.16	1.36	1.10	0.26	81	80	67	1.96	1.50	71	0.013	102	103	44.2	0.10	1.15		110.3	164.6	158.0	54.0	164.4	149	69	69	67		1.001	9.571	1057
373	60.141	60.995		0.16	0.16	1.36	1.10	0.26	81	80	67	1.97	1.50	71	0.014	98	99	44.3	-0.08	1.13		109.8	164.0	157.4	54.0	163.7	143	69	69	67		1.001	9.404	1033
374	60.304	61.160		0.16	0.16	1.35	1.10	0.26	81	80	67	1.98	1.50	70	0.014	99	99	44.4	-0.07	1.09		109.4	163.4	157.0	54.0	163.4	140	69	69	67		1.001	9.060	994
375	60.467	61.324		0.16	0.16	1.36	1.09	0.26	81	80	67	1.97	1.50	70	0.015	95	95	44.1	0.24	1.09		109.1	163.2	156.7	53.9	163.0	137	69	69	67		1.001	9.081	992
376	60.630	61.489		0.16	0.16	1.35	1.09	0.26	81	80	67	1.97	1.50	70	0.013	102	103	44.3	-0.17	1.07		108.5	162.6	156.1	53.9	162.4	135	69	69	67		1.001	8.917	969
377	60.793	61.653		0.16	0.16	1.36	1.09	0.26	81	80	67	1.96	1.50	70	0.014	99	98	44.3	-0.01	1.11		107.9	162.0	155.6	53.9	161.8	133	68	69	67		1.001	9.243	999
378	60.956	61.817		0.16	0.16	1.36	1.10	0.26	81	80	67	1.96	1.50	70	0.014	99	98	44.4	-0.04	1.55		107.6	161.6	155.1	53.8	161.4	131	68	69	67		1.001	12.961	1396
379	61.118	61.982		0.16	0.16	1.35	1.09	0.26	81	80	67	1.98	1.50	78	0.013	102	103	44.3	0.10	1.46		106.1	159.9	150.7	53.7	159.8	151	69	69	67		1.001	12.152	1291
380	61.281	62.146		0.16	0.16	1.35	1.09	0.26	81	80	67	1.98	1.50	81	0.014	100	99	44.2	0.05	1.42		105.5	159.4	150.9	53.6	159.2	176	69	69	67		1.001	11.830	1250
381	61.444	62.310		0.16	0.16	1.35	1.09	0.26	81	80	67	1.98	1.50	83	0.014	100	99	44.0	0.16	1.09		105.5	159.3	152.9	53.6	159.1	195	69	69	67		1.001	9.078	959
382	61.607	62.474		0.16	0.16	1.35	1.09	0.26	81	80	67	1.97	1.50	84	0.014	100	100	43.9	0.19	1.07		105.7	159.6	153.1	53.6	159.3	209	69	69	67		1.001	8.922	944
383	61.769	62.638		0.16	0.16	1.35	1.09	0.26	81	80	67	1.97	1.50	86	0.015	96	96	43.6	0.28	1.09		105.2	159.0	152.8	53.7	158.9	220	69	70	67		1.001	9.081	956
384	61.932	62.802		0.16	0.16	1.35	1.09	0.26	81	80	67	1.98	1.50	87	0.014	100	100	43.3	0.28	1.11		104.9	158.8	152.7	53.7	158.6	230	70	70	67		1.001	9.242	971
385	62.095	62.966		0.16	0.16	1.35	1.09	0.26	81	80	67	1.98	1.50	88	0.013	104	104	43.0	0.31	1.05		104.8	158.6	152.5	53.6	158.4	239	70	70	67		1.001	8.774	920
386	62.258	63.131		0.16	0.16	1.35	1.10	0.26	81	80	67	1.97	1.50	89	0.015	97	97	42.8	0.17	1.44		104.7	158.6	152.4	53.5	158.3	247	70	70	67		1.001	11.993	1258
387	62.421	63.295		0.16	0.16	1.35	1.09	0.26	81	80	67	1.97	1.50	90	0.012	108	108	42.6	0.23	1.50		103.9	157.5	148.8	53.6	157.4	254	70	70	67		1.001	12.477	1297
388	62.583	63.459		0.16	0.16	1.35	1.09	0.26	81	80	67	1.97	1.50	92	0.013	104	104	42.2	0.41	1.46		103.5	157.3	148.4	53.5	157.0	262	70	71	67		1.001	12.158	1260
389	62.746	63.623		0.16	0.16	1.35	1.08	0.26	81	80	67	1.98	1.50	93	0.014	101	100	41.8	0.40	1.42		103.7	157.7	148.8	53.5	157.2	270	71	71	67		1.001	11.833	1229
390	62.908	63.786		0.16	0.16	1.35	1.09	0.26	81	80	67	2.00	1.50	95	0.013	104	104	41.4	0.38	1.46		103.3	157.4	148.6	53.7	157.1	281	71	71	67		1.001	12.152	1257
391	63.071	63.950		0.16	0.16	1.34	1.09	0.26	81	80	67	1.98	1.60	97	0.016	95	94	40.9	0.44	1.19		104.0	158.3	151.6	53.9	157.9	291	71	72	67		1.001	9.885	1029
392	63.233	64.113		0.16	0.16	1.35	1.08	0.26	81	80	67	2.01	1.60	98	0.014	101	100	40.7	0.27	1.16		104.9	159.2	152.6	53.9	158.9	303	71	72	67		1.001	9.704	1019
393	63.395	64.277		0.16	0.16	1.35	1.08	0.26	81	80	67	2.00	1.60	100	0.014	101	101	40.2	0.50	1.13		105.5	159.8	153.2	54.0	159.5	313	72	72	67		1.001	9.404	994
394	63.557	64.440		0.16	0.16	1.34	1.08	0.26	81	80	67	2.00	1.60	100	0.012	109	108	40.0	0.23	1.09		105.8	160.2	153.6	54.0	159.8	318	72	72	67		1.001	9.082	962
395	63.719	64.602		0.16	0.16	1.35	1.08	0.26	81	80	67	2.01	1.60	101	0.012	109	108	39.3	0.64	1.13		106.5	160.9	154.2	54.0	160.4	320	72	73	67		1.001	9.403	1002
396	63.881	64.765		0.16	0.16	1.35	1.08	0.26	81	80	67	2.00	1.60	101	0.014	101	100	38.9	0.46	1.26		107.3	161.6	154.2	54.0	161.2	323	72	73	67		1.001	10.536	1132
397	64.042	64.927		0.16	0.16	1.35	1.08	0.26	81	80	67	2.02	1.60	103	0.015	97	97	38.2	0.66	1.24		107.7	161.9	154.4	53.9	161.5	329	73	73	67		1.001	10.373	1118
398	64.204	65.090		0.16	0.16	1.34	1.07	0.26	81	80	67	2.02	1.60	105	0.013	105	105	37.7	0.49	1.22		108.4	162.7	155.4	53.8	162.2	339	73	74	67		1.001	10.213	1109
399	64.366	65.251		0.16	0.16	1.34	1.07	0.26	81	80	67	2.01	1.60	106	0.015	98	96	37.1	0.57	1.28		109.0	163.2	155.5	53.8	162.8	346	74	74	67		1.001	10.699	1168
400	64.527	65.413		0.16	0.16	1.34	1.07	0.26	81	80	67	2.03	1.60	107	0.015	97	97	36.5	0.62	1.28		109.9	164.0	156.3	53.7	163.6	350	74	75	67		1.001	10.695	1177
401	64.689	65.576		0.16	0.16	1.34	1.07	0.26	81	80	67	2.02	1.60	107	0.013	105	105	35.8	0.68	1.28		111.0	165.0	157.1	53.7	164.7	352	74	75	67		1.001	10.699	1189
402	64.850	65.737		0.16	0.16	1.34	1.06	0.26	81	80	69	2.03	1.60	108	0.015	97	96	35.3	0.52	1.24		111.6	165.7	157.7	53.7	165.3	359	75	75	69		1.001	10.375	1159
403	65.011	65.898		0.16	0.16	1.33	1.06	0.26	81	80	67	2.02	1.60	110	0.013	105	104	34.9	0.44	1.30		112.5	166.6	158.5	53.6	166.1	364	75	76	67		1.001	10.862	1223
404	65.173	66.059		0.16	0.16	1.33	1.06	0.26	81	80	67	2.04	1.60	110	0.013	105	104	34.2	0.67	1.32		113.6	167.7	159.5	53.7	167.3	367	75	76	67		1.001	11.025	1254
405	65.334	66.221		0.16	0.16	1.34	1.06	0.26	81	80	67	2.05	1.60	110	0.013	105	104	33.7	0.50	1.26		114.4	168.6	160.5	53.8	168.2	369	76	76	67		1.001	10.537	1207
406	65.495	66.382		0.16	0.16	1.33	1.05	0.26	80	80	67	2.05	1.60	110	0.014	101	100	33.0	0.67	0.93		115.7	170.2	163.9	53.9	169.5	371	76	76	67		1.001	7.789	902
407	65.656	66.542		0.16	0.16	1.33	1.05	0.26	80	80	67	2.05	1.60	111	0.013	105	103	32.4	0.59	0.97		116.9	171.1	165.0	53.8	170.7	372	76	76	67		1.001	8.104	949
408	65.817	66.703		0.16	0.16	1.33	1.05	0.26	80	80	67	2.05	1.60	111	0.014	101	100	32.0	0.44	1.03		118.0	172.6	166.1	54.1	172.1	372	76	76	67		1.001	8.597	1016
409	65.978	66.864		0.16	0.16	1.33	1.05	0.26	80	80	67	2.06	1.60	111	0.013	105	104	31.4	0.64	1.05		118.9	173.6	167.0	54.2	173.2	372	77	77	67		1.001	8.757	1043
410	66.139	67.024		0.16	0.16	1.33	1.05	0.26	80	80	67	2.05	1.60	112	0.014	101	100	30.9	0.51	1.16		119.6	174.4	166.8	54.3	173.9	373	77	77	67		1.001	9.693	1161
411	66.299	67.184		0.16	0.16	1.32	1.05	0.26	80	80	67	2.05	1.70	112	0.014	101	100	30.5	0.34	1.19		120.8	175.5	167.9	54.3	175.0	374	77	77	67		1.001	9.945	1202
412	66.460	67.344		0.16	0.16	1.33	1.04	0.26	80	80	68	2.05	1.70	112	0.014	101	100	29.9	0.65	1.20		121.5	176.1	168.5	54.3	175.8	373	77	77	68		1.001	9.988	1215
413	66.620	67.504		0.16	0.16	1.32	1.04	0.26	80	80	68	2.06	1.70	113	0.013	105	103	29.4	0.52	1.11		122.4	177.2	169.4	54.2	176.7	374	77	77	68		1.001	9.260	1135
414	66.781	67.663		0.16	0.16	1.31	1.04	0.26	81	80	68	2.06	1.70	113	0.014	101	99	28.8	0.55	1.17		123.4	178.2	170.3	54.3	177.7	374	77	77	68		1.001	9.727	1202
415	66.941	67.823		0.16	0.16	1.32	1.03	0.26	80	80	68	2.06	1.70	114	0.014	101	100	28.3	0.50	1.19		124.3	178.9	171.3	54.3	178.5	374	78	77	68		1.001	9.886	1230
416	67.101	67.982		0.16	0.16	1.32	1.03	0.26	80	80	68	2.06	1.70	114	0.014	101	99	28.0	0.30	1.13		125.3	180.2	172.3	54.3	179.6	374	78	77	68		1.001	9.400	1179
417	67.261	68.141		0.16	0.16	1.32	1.03	0.26	80	80	68	2.07	1.70	113	0.012	109	107	27.5	0.56	1.17		126.3	181.0	173.2	54.2	180.5	374	78	77	68		1.001	9.728	1230
418	67.422	68.300		0.16	0.16	1.32	1.04	0.26	80	80	68	2.05	1.70	97	0.014	100	98	27.2	0.30	1.07		127.1	181.5	173.6	54.0	181.1	352	77	77	68		1.001	8.919	1135
419	67.582	68.459		0.16	0.16	1.32	1.03	0.26	81	80	69	2.06	1.70	89	0.013	102	101	26.9	0.25	0.99		128.1	182.5	175.5	54.0	182.1	322	77	76	69		1.001	8.270	1061
420	67.743	68.620		0.16	0.16	1.32	1.03	0.26	81	80	68	2.05	1.70	85	0.015	95	94	26.6	0.27	0.97		128.3	182.7	175.8	54.0	182.3	304	76	76	68		1.001	8.111	1042
421	67.903	68.779		0.16	0.16	1.32	1.03	0.26	81	80	68	2.04	1.70	83	0.013	102	100	26.4	0.21	0.99		128.3	182.6	175.8	54.1	182.4	290	75	75	68		1.001	8.272	1063

Elapsed Time	Particulate Sampling Data																	Fuel Weight, lb		Flow, gpm		Temperature Data, oF												
	Gas Meter Cubic Feet (1)	Gas Meter Cubic Feet (2)	Gas Meter Cubic Feet (amb)	Sample Rate, cfm (1)	Sample Rate, cfm (2)	Orifice dH (1)	Orifice dH (2)	Orifice dH (amb)	Meter oF (1)	Meter oF (2)	Meter oF (amb)	Meter Vac. in. Hg. (1)	Meter Vac. in. Hg. (2)	Dilution Tunnel Temp.	Dilution Tunnel dP	Pro. Rate (%) (1)	Pro. Rate (%) (2)	Scale Reading	Weight Change	Load Side Liquid Flow Rate	Boiler Side Liquid Flow Rate (optional)	Thermopile ΔT	Boiler to Heat Exch. Temp.	Heat Exch to Boiler Temp.	Inlet Load Temp.	Outlet Load Temp.	Stack	Filter (1)	Filter (2)	Ambient		Specific Heat of Inlet Water (BTU/lb-°F)	Mass Flow Rate of Inlet Water (lb/min)	Heat Output, Btu
422	68.064	68.938		0.16	0.16	1.32	1.03	0.26	81	80	68	2.03	1.70	82	0.013	102	100	26.3	0.13	1.03		128.3	182.9	176.0	54.2	182.4	278	74	75	68		1.001	8.599	1104
423	68.225	69.099		0.16	0.16	1.32	1.08	0.26	81	80	68	2.03	1.70	81	0.014	98	97	26.1	0.23	1.01		128.1	182.6	175.8	54.3	182.4	268	74	74	68		1.001	8.438	1082
424	68.387	69.262		0.16	0.16	1.33	1.08	0.26	81	80	68	2.03	1.70	79	0.015	95	95	26.0	0.07	1.01		128.0	182.7	175.8	54.4	182.3	259	73	73	68		1.001	8.427	1080
425	68.548	69.424		0.16	0.16	1.33	1.08	0.26	81	80	68	2.03	1.70	79	0.014	98	98	25.8	0.18	1.01		127.9	182.6	175.7	54.4	182.3	252	72	73	68		1.001	8.431	1079
426	68.709	69.586		0.16	0.16	1.33	1.08	0.26	81	80	68	2.04	1.70	78	0.015	95	96	25.9	-0.14	1.05		127.6	182.3	175.6	54.4	182.0	245	72	72	68		1.001	8.752	1118
427	68.870	69.751		0.16	0.16	1.33	1.09	0.26	81	80	68	2.03	1.70	78	0.014	98	98	25.8	0.13	1.07		127.5	182.2	175.5	54.4	181.9	239	71	72	68		1.001	8.910	1137
428	69.032	69.915		0.16	0.16	1.33	1.09	0.26	81	80	68	2.03	1.70	77	0.013	102	103	25.8	-0.02	1.02		127.5	182.2	175.5	54.4	181.9	233	71	71	68		1.001	8.514	1087
429	69.193	70.080		0.16	0.16	1.33	1.08	0.26	81	80	68	2.03	1.70	77	0.016	92	93	25.9	-0.09	1.02		127.2	181.9	175.1	54.4	181.6	228	70	71	68		1.001	8.500	1082
430	69.354	70.243		0.16	0.16	1.33	1.08	0.26	81	80	68	2.01	1.70	75	0.014	98	98	25.8	0.07	1.03		126.9	181.6	174.7	54.4	181.2	225	70	71	68		1.001	8.588	1091
431	69.516	70.407		0.16	0.16	1.33	1.09	0.26	81	80	68	2.01	1.70	74	0.012	106	106	25.9	-0.05	1.07		126.7	181.2	173.6	54.3	181.0	222	70	71	68		1.001	8.914	1131
432	69.677	70.571		0.16	0.16	1.33	1.09	0.26	81	80	68	2.00	1.70	74	0.014	98	99	25.8	0.06	1.09		125.9	180.2	172.7	54.3	180.1	219	70	71	68		1.001	9.077	1144
433	69.839	70.735		0.16	0.16	1.33	1.10	0.26	81	80	68	2.02	1.70	73	0.014	98	99	25.7	0.18	1.15		125.6	180.1	172.5	54.2	179.8	214	69	71	68		1.001	9.564	1203
434	70.001	70.900		0.16	0.17	1.33	1.10	0.26	81	80	68	2.02	1.70	73	0.016	92	93	25.8	-0.15	1.13		125.4	179.8	172.3	54.1	179.5	210	69	71	68		1.001	9.402	1180
435	70.163	71.065		0.16	0.16	1.33	1.10	0.26	81	80	68	2.01	1.60	73	0.014	98	99	25.7	0.14	1.15		125.2	179.4	171.9	54.0	179.2	206	69	70	68		1.001	9.563	1199
436	70.324	71.231		0.16	0.17	1.34	1.10	0.26	81	80	68	2.02	1.60	73	0.014	98	100	25.6	0.05	1.17		124.5	178.9	171.3	54.0	178.6	202	69	70	68		1.001	9.723	1212
437	70.486	71.396		0.16	0.17	1.34	1.10	0.26	81	80	68	2.01	1.60	72	0.014	98	99	25.7	-0.13	1.17		124.4	178.6	171.1	54.0	178.4	196	69	70	68		1.001	9.725	1211
438	70.647	71.561		0.16	0.17	1.34	1.11	0.26	81	80	68	2.00	1.60	72	0.015	94	96	25.7	0.03	1.13		123.8	178.0	170.6	54.0	177.8	195	69	70	68		1.001	9.401	1165
439	70.809	71.727		0.16	0.17	1.34	1.11	0.26	81	80	68	2.01	1.60	72	0.013	102	103	25.8	-0.04	1.11		123.5	177.6	170.3	54.0	177.5	191	69	70	68		1.001	9.240	1143
440	70.971	71.892		0.16	0.16	1.33	1.11	0.26	81	80	67	2.02	1.60	72	0.014	98	99	25.8	-0.03	1.11		123.1	177.3	169.9	53.9	177.0	187	69	70	67		1.001	9.243	1139
441	71.133	72.057		0.16	0.17	1.34	1.11	0.26	81	80	67	2.00	1.60	72	0.014	98	99	25.6	0.17	1.05		122.7	176.8	169.4	53.9	176.6	183	69	70	67		1.001	8.758	1075
442	71.294	72.223		0.16	0.17	1.34	1.11	0.26	81	80	67	2.02	1.60	72	0.013	101	103	25.8	-0.20	1.13		122.2	176.2	169.0	53.9	176.0	181	69	70	67		1.001	9.402	1150
443	71.456	72.389		0.16	0.17	1.34	1.11	0.26	81	80	67	2.00	1.60	72	0.013	102	103	25.6	0.17	1.13		121.9	175.9	168.7	53.8	175.7	178	69	70	67		1.001	9.410	1148
444	71.618	72.555		0.16	0.17	1.34	1.11	0.26	81	80	67	2.01	1.60	71	0.015	95	96	25.7	-0.04	1.11		121.2	175.4	168.1	53.8	175.0	175	69	70	67		1.001	9.232	1121
445	71.780	72.721		0.16	0.17	1.34	1.11	0.26	81	80	67	2.02	1.60	71	0.014	98	100	25.8	-0.13	1.09		120.9	174.8	167.7	53.8	174.6	172	69	69	67		1.001	9.125	1104
446	71.942	72.887		0.16	0.17	1.34	1.11	0.26	81	80	67	2.02	1.60	71	0.014	98	100	25.8	0.00	1.12		120.5	174.5	167.3	53.7	174.2	169	69	69	67		1.001	9.346	1128
447	72.104	73.053		0.16	0.17	1.34	1.11	0.26	81	80	67	2.01	1.60	71	0.014	98	100	25.8	0.03	1.07		120.0	173.9	166.8	53.7	173.7	166	69	69	67		1.001	8.927	1073
448	72.266	73.219		0.16	0.17	1.34	1.10	0.26	81	80	67	2.00	1.60	71	0.015	95	96	25.8	-0.06	1.10		119.5	173.4	166.3	53.7	173.2	163	69	69	67		1.001	9.196	1100
449	72.428	73.385		0.16	0.17	1.33	1.11	0.26	81	80	67	2.01	1.60	71	0.013	102	103	25.9	-0.07	1.11		119.0	172.9	165.8	53.7	172.7	161	69	69	67		1.001	9.241	1101
450	72.590	73.550		0.16	0.16	1.33	1.11	0.26	81	80	67	2.01	1.60	71	0.014	98	99	25.9	0.06	1.11		118.7	172.6	165.5	53.7	172.4	158	69	69	67		1.001	9.243	1099
451	72.752	73.716		0.16	0.17	1.34	1.12	0.26	81	80	67	2.00	1.60	71	0.013	102	103	25.8	0.07	1.09		118.1	171.9	164.9	53.7	171.8	156	69	69	67		1.001	9.081	1074
452	72.914	73.882		0.16	0.17	1.34	1.12	0.26	81	80	67	2.01	1.60	71	0.013	102	103	25.8	-0.06	1.11		117.6	171.6	164.6	53.8	171.4	154	69	69	67		1.001	9.242	1088
453	73.075	74.048		0.16	0.17	1.33	1.11	0.26	81	80	67	2.01	1.60	71	0.013	101	103	25.9	-0.06	1.03		117.1	171.2	164.2	53.9	170.9	152	68	69	67		1.001	8.594	1007
454	73.237	74.214		0.16	0.17	1.33	1.11	0.26	81	80	67	2.00	1.60	71	0.013	102	103	25.8	0.06	1.07		116.5	170.6	163.6	53.9	170.4	149	68	69	67		1.001	8.920	1040
455	73.399	74.380		0.16	0.17	1.33	1.12	0.26	81	80	67	2.02	1.60	70	0.013	102	103	25.8	0.07	1.11		115.7	169.8	163.0	54.0	169.7	147	68	69	67		1.001	9.247	1071
456	73.561	74.546		0.16	0.17	1.33	1.12	0.26	81	80	67	2.01	1.60	71	0.014	98	100	26.0	-0.19	1.09		115.4	169.8	162.8	54.1	169.5	145	68	69	67		1.001	9.083	1049
457	73.723	74.712		0.16	0.17	1.33	1.12	0.26	81	80	67	2.00	1.60	70	0.014	98	99	25.9	0.04	1.13		114.8	169.1	162.2	54.2	169.0	143	68	69	67		1.001	9.404	1080
458	73.885	74.878		0.16	0.17	1.33	1.12	0.26	81	80	67	2.00	1.60	70	0.013	102	103	25.9	-0.03	1.15		114.2	168.7	161.9	54.2	168.5	141	68	69	67		1.001	9.571	1095
459	74.047	75.045		0.16	0.17	1.33	1.12	0.26	81	80	67	2.02	1.60	70	0.013	102	104	25.9	0.03	1.11		113.5	168.0	161.1	54.2	167.7	139	68	69	67		1.001	9.247	1051
460	74.209	75.210		0.16	0.16	1.33	1.11	0.26	81	80	67	2.02	1.60	79	0.015	95	96	25.9	0.02	1.09		113.2	167.7	160.9	54.3	167.5	154	69	69	67		1.001	9.083	1029
461	74.370	75.375		0.16	0.17	1.33	1.11	0.26	81	80	67	2.00	1.60	81	0.012	106	108	25.7	0.22	1.09		112.6	167.0	160.3	54.2	166.8	181	69	70	67		1.001	9.081	1024
462	74.533	75.541		0.16	0.17	1.34	1.12	0.26	81	80	67	1.99	1.60	73	0.013	103	103	25.6	0.10	1.13		112.1	166.6	159.8	54.2	166.3	171	68	68	67		1.001	9.387	1054
463	74.696	75.708		0.16	0.17	1.35	1.13	0.26	81	80	67	1.99	1.60	71	0.014	99	100	25.6	0.00	1.15		111.7	166.1	159.4	54.2	165.9	159	68	69	67		1.001	9.610	1075
464	74.859	75.875		0.16	0.17	1.34	1.13	0.26	81	80	67	1.99	1.60	70	0.014	99	100	25.5	0.05	1.12		111.3	165.5	158.9	54.1	165.4	151	68	69	67		1.001	9.344	1041
465	75.021	76.042		0.16	0.17	1.34	1.13	0.26	81	80	67	1.97	1.60	70	0.012	106	108	25.7	-0.13	1.13		110.8	165.1	158.4	54.1	164.8	146	68	68	67		1.001	9.443	1047
466	75.184	76.209		0.16	0.17	1.34	1.13	0.26	81	80	67	1.99	1.60	70	0.014	99	100	25.6	0.07	1.07		110.5	164.7	158.1	54.0	164.5	142	68	68	67		1.001	8.928	987
467	75.346	76.376		0.16	0.17	1.35	1.13	0.26	81	80	67	1.97	1.60	70	0.013	102	104	25.5	0.07	1.05		110.1	164.3	157.7	54.0	164.1	139	68	68	67		1.001	8.756	965
468	75.509	76.543		0.16	0.17	1.35	1.13	0.26	81	80	67	1.99	1.60	70	0.014	99	100	25.6	-0.07	1.09		109.6	163.7	157.2	54.0	163.6	137	68	68	67		1.001	9.083	997
469	75.671	76.711		0.16	0.17	1.34	1.13	0.26	81	80	67	1.98	1.60	70	0.014	98	101	25.7	-0.14	1.13		109.0	163.2	156.6	53.9	163.0	134	68	68	67		1.001	9.408	1027
470	75.834	76.877		0.16	0.17	1.35	1.13	0.26	81	80	67	1.98	1.60	70	0.013	102	103	25.6	0.16	1.09		108.7	162.9	156.3	53.9	162.6	132	68	68	67		1.001	9.080	989
471	75.996	77.044		0.16	0.17	1.34	1.13	0.26	81	80	67	1.98	1.60	70	0.014	98	100	25.8	-0.27	1.07		108.2	162.3	155.7	53.9	162.0	130	68	68	67		1.001	8.925	966
472	76.159	77.211		0.16	0.17	1.35	1.13	0.26	81	80	67	1.98	1.60	70	0.013	102	104	25.6	0.19	1.15		107.7	161.8	155.3	53.8	161.6	128	68	68	67		1.001	9.569	1032
473	76.321	77.375		0.16	0.16	1.33	1.08	0.26	81	80	67	1.97	1.50	70	0.013	102	102	25.6	0.07	1.13		107.3	161.4	154.8	53.8	161.1	127	68	68	67		1.001	9.406	1011
474	76.482	77.538		0.16	0.16	1.32	1.06	0.26	81	80	67	1.98	1.60	79	0.014	98	98	25.6	-0.01	1.13		106.9	160.9	154.3	53.8	160.6	158	69	69	67		1.001	9.407	1007
475	76.643	77.700		0.16	0.16	1.32	1.07	0.26	81	80	67	1.96	1.50	81	0.013	102	102	25.5	0.10	1.07		106.3	160.2	153.8	53.7	160.1	181	68	69	67		1.001	8.924	950
476	76.804	77.862		0.16	0.16	1.33	1.07	0.26	81	80	67	1.97	1.50	82	0.012	106	106	25.2	0.25	1.09		105.9	159.8	153.4	53.7	159.6	196	68	69	67		1.001	9.087	963
477	76.965	78.025		0.16	0.16	1.32	1.07	0.26	81	80	67	1.97	1.50	84	0.013	102	103	25.2	0.03	1.07		105.6	159.5	153.2	53.7	159.3	207	69	69	67		1.001	8.923	943
478	77.126	78.188		0.16	0.16	1.33	1.08	0.26	81	80	67	1.97	1.50	85	0.014	99	99	25.0	0.24	1.17		105.3	159.1	153.0	53.7	158.9	217	69	69	67		1.001	9.727	1025
479	77.287	78.351		0.16	0.16	1.32	1.08	0.26	81	80	67	1.96	1.50	88	0.013	103	103	24.9	0.12	1.13		104.9	158.7	152.5	53.7	158.6	227	69	69	67		1.001	9.405	988
480	77.448	78.513		0.16	0.16	1.33	1.08	0.26	81	80	67	1.98	1.50	89	0.015	96	95	24.6	0.26	1.11		104.5	158.4	152.1	53.7	158.2	235	69	69	67		1.001	9.239	966
481	77.609	78.676		0.16	0.16	1.33	1.08	0.26	81	80	67	1.97	1.50	90	0.014	99	99	24.4	0.24	1.10		104.4	158.5	152.2	53.9	158.3	244	69	70	67		1.001	9.173	959
482	77.770	78.839		0.16	0.16	1.32	1.08	0.26	80	80	67	1.97	1.50	91	0.013	103	103	24.1	0.28	1.09		104.4	158.6	152.3	54.0	158.4	253	69	70	67		1.001	9.083	950
483	77.931	79.002		0.16	0.16	1.32	1.07	0.26	80	80	67	1.98	1.60	92	0.014	100	100	23.7	0.35	1.71		103.6	157.8	147.6	54.0	157.6	262	70	70	67		1.001	14.255	1478

Elapsed Time	Particulate Sampling Data																	Fuel Weight, lb		Flow, gpm		Temperature Data, oF												
	Gas Meter Cubic Feet (1)	Gas Meter Cubic Feet (2)	Gas Meter Cubic Feet (amb)	Sample Rate, cfm (1)	Sample Rate, cfm (2)	Orifice dH (1)	Orifice dH (2)	Orifice dH (amb)	Meter oF (1)	Meter oF (2)	Meter oF (amb)	Meter Vac. in. Hg. (1)	Meter Vac. in. Hg. (2)	Dilution Tunnel Temp.	Dilution Tunnel dP	Pro. Rate (%) (1)	Pro. Rate (%) (2)	Scale Reading	Weight Change	Load Side Liquid Flow Rate	Boiler Side Liquid Flow Rate (optional)	Thermopile ΔT	Boiler to Heat Exch. Temp.	Heat Exch to Boiler Temp.	Inlet Load Temp.	Outlet Load Temp.	Stack	Filter (1)	Filter (2)	Ambient		Specific Heat of Inlet Water (BTU/lb-°F)	Mass Flow Rate of Inlet Water (lb/min)	Heat Output, Btu
484	78.092	79.164		0.16	0.16	1.32	1.06	0.26	80	80	67	1.98	1.60	93	0.013	103	103	23.5	0.17	1.66		102.9	157.3	146.6	53.9	156.8	271	70	70	67		1.001	13.841	1426
485	78.252	79.326		0.16	0.16	1.31	1.07	0.26	80	80	67	1.99	1.60	95	0.013	103	103	23.3	0.22	1.49		103.6	157.8	148.8	53.8	157.5	278	70	71	67		1.001	12.454	1292
486	78.413	79.488		0.16	0.16	1.31	1.06	0.26	80	80	67	1.98	1.60	96	0.013	104	103	23.2	0.18	1.40		103.9	158.5	149.8	54.1	158.0	284	71	71	67		1.001	11.673	1215
487	78.573	79.650		0.16	0.16	1.31	1.06	0.26	80	80	67	2.00	1.60	96	0.014	99	99	22.5	0.65	1.42		104.0	158.6	150.3	54.3	158.3	291	71	71	67		1.001	11.831	1232
488	78.733	79.811		0.16	0.16	1.31	1.06	0.26	80	80	68	1.99	1.60	99	0.015	96	96	22.4	0.07	1.26		104.3	159.1	150.6	54.4	158.7	299	71	71	68		1.001	10.543	1101
489	78.894	79.972		0.16	0.16	1.32	1.06	0.26	80	80	68	2.00	1.60	101	0.013	104	103	21.9	0.53	1.20		105.0	159.9	152.6	54.5	159.5	306	71	72	68		1.001	10.041	1056
490	79.054	80.133		0.16	0.16	1.31	1.05	0.26	80	80	68	1.99	1.60	101	0.013	104	103	21.5	0.43	1.25		105.7	160.7	153.4	54.5	160.2	312	72	72	68		1.001	10.380	1099
491	79.214	80.295		0.16	0.16	1.31	1.05	0.26	80	80	68	1.99	1.60	101	0.013	104	104	21.3	0.20	1.19		106.5	161.2	153.9	54.3	160.8	316	72	72	68		1.001	9.888	1055
492	79.373	80.454		0.16	0.16	1.31	1.05	0.26	80	80	68	2.00	1.60	102	0.013	103	102	21.0	0.28	1.21		107.3	161.8	154.6	54.2	161.4	318	72	72	68		1.001	10.052	1080
493	79.534	80.615		0.16	0.16	1.35	1.07	0.26	80	80	68	2.06	1.60	103	0.015	97	96	20.6	0.40	1.21		108.1	162.6	155.3	54.1	162.1	321	72	73	68		1.001	10.053	1088
494	79.696	80.778		0.16	0.16	1.35	1.07	0.26	80	80	68	2.06	1.70	103	0.013	105	104	20.1	0.51	1.24		108.7	163.2	155.8	54.1	162.8	323	73	73	68		1.001	10.379	1129
495	79.858	80.939		0.16	0.16	1.35	1.06	0.26	80	80	68	2.07	1.70	103	0.014	101	99	19.9	0.22	1.21		109.4	163.8	156.5	54.1	163.5	325	73	73	68		1.001	10.053	1101
496	80.021	81.100		0.16	0.16	1.35	1.06	0.26	80	80	68	2.07	1.70	104	0.014	102	99	19.3	0.52	1.24		110.1	164.6	157.2	54.1	164.2	327	73	73	68		1.001	10.377	1144
497	80.183	81.261		0.16	0.16	1.35	1.05	0.26	80	80	68	2.06	1.70	104	0.015	98	96	19.3	0.04	1.19		110.7	165.1	157.8	54.0	164.8	328	73	74	68		1.001	9.887	1096
498	80.345	81.423		0.16	0.16	1.34	1.05	0.26	81	80	68	2.08	1.70	104	0.013	105	104	18.9	0.45	1.21		111.6	166.0	158.5	53.9	165.6	330	73	74	68		1.001	10.049	1123
499	80.507	81.583		0.16	0.16	1.33	1.05	0.26	81	80	68	2.08	1.70	105	0.013	105	103	18.5	0.37	1.23		112.4	166.6	159.1	53.8	166.2	333	74	74	68		1.001	10.216	1150
500	80.668	81.743		0.16	0.16	1.34	1.05	0.26	81	80	68	2.07	1.70	105	0.014	101	99	18.0	0.50	1.21		113.4	167.6	159.9	53.7	167.2	335	74	74	68		1.001	10.051	1141
501	80.830	81.904		0.16	0.16	1.34	1.04	0.26	81	80	68	2.09	1.70	105	0.013	105	103	17.7	0.30	1.21		114.1	168.1	160.5	53.7	167.8	335	74	74	68		1.001	10.048	1148
502	80.991	82.064		0.16	0.16	1.33	1.04	0.26	81	80	68	2.09	1.70	105	0.015	97	96	17.3	0.40	1.24		114.7	168.8	161.1	53.6	168.4	334	74	74	68		1.001	10.373	1191
503	81.153	82.223		0.16	0.16	1.33	1.04	0.26	81	80	68	2.09	1.70	105	0.015	98	95	17.0	0.28	1.22		115.6	169.7	161.8	53.6	169.2	333	74	74	68		1.001	10.206	1181
504	81.314	82.384		0.16	0.16	1.33	1.03	0.26	81	80	67	2.08	1.70	105	0.013	104	103	16.6	0.46	1.24		116.0	170.0	162.2	53.6	169.5	332	74	74	67		1.001	10.367	1204
505	81.475	82.542		0.16	0.16	1.33	1.03	0.26	81	80	67	2.09	1.70	105	0.014	101	98	16.4	0.16	1.17		116.6	170.6	162.6	53.5	170.1	331	74	74	67		1.001	9.729	1136
506	81.636	82.702		0.16	0.16	1.33	1.03	0.26	81	80	67	2.09	1.70	105	0.014	101	99	15.9	0.46	1.28		117.5	171.5	163.5	53.5	171.0	330	74	75	67		1.001	10.681	1256
507	81.797	82.861		0.16	0.16	1.33	1.03	0.26	81	80	67	2.09	1.70	105	0.015	97	95	15.6	0.39	1.21		117.7	171.5	163.6	53.5	171.2	329	74	75	67		1.001	10.056	1185
508	81.958	83.020		0.16	0.16	1.33	1.02	0.26	81	80	67	2.10	1.70	105	0.014	101	98	15.3	0.24	1.20		118.6	172.6	164.5	53.4	172.1	329	74	75	67		1.001	10.036	1192
509	82.119	83.178		0.16	0.16	1.33	1.02	0.26	81	80	67	2.10	1.80	105	0.014	101	98	14.9	0.46	1.25		119.3	173.1	165.0	53.4	172.7	328	74	75	67		1.001	10.441	1247
510	82.280	83.338		0.16	0.16	1.33	1.02	0.26	81	80	67	2.12	1.80	104	0.014	100	99	14.5	0.31	1.22		119.9	173.9	165.6	53.4	173.4	328	74	75	67		1.001	10.148	1219
511	82.440	83.495		0.16	0.16	1.33	1.02	0.26	81	80	67	2.12	1.80	104	0.015	96	94	14.3	0.24	1.20		120.6	174.4	166.2	53.4	174.0	327	74	75	67		1.001	9.996	1207
512	82.601	83.657		0.16	0.16	1.32	1.08	0.26	81	80	67	2.12	1.80	104	0.013	104	104	13.9	0.44	1.24		121.0	174.7	166.5	53.4	174.4	327	74	75	67		1.001	10.372	1256
513	82.761	83.820		0.16	0.16	1.32	1.08	0.26	81	80	67	2.12	1.80	105	0.014	100	101	13.7	0.17	1.22		121.4	175.1	166.7	53.4	174.7	328	74	75	67		1.001	10.209	1241
514	82.922	83.982		0.16	0.16	1.32	1.07	0.26	81	80	67	2.11	1.80	105	0.014	101	100	13.3	0.35	1.21		122.2	176.0	167.6	53.3	175.5	329	74	75	67		1.001	10.049	1229
515	83.083	84.144		0.16	0.16	1.32	1.07	0.26	81	80	67	2.13	1.90	105	0.014	101	100	13.0	0.31	1.22		122.4	176.0	167.8	53.3	175.7	330	74	75	67		1.001	10.211	1251
516	83.244	84.307		0.16	0.16	1.32	1.07	0.26	81	80	67	2.12	1.90	105	0.014	101	101	12.8	0.26	1.26		123.0	176.8	168.3	53.3	176.3	331	74	75	67		1.001	10.532	1297
517	83.404	84.470		0.16	0.16	1.31	1.07	0.26	81	80	67	2.14	1.90	105	0.014	100	101	12.3	0.48	1.23		123.5	177.2	168.9	53.3	176.8	330	74	75	67		1.001	10.217	1264
518	83.564	84.631		0.16	0.16	1.32	1.06	0.26	81	80	67	2.14	1.90	105	0.014	100	100	12.0	0.27	1.19		124.2	177.9	169.6	53.3	177.6	330	74	75	67		1.001	9.889	1230
519	83.724	84.793		0.16	0.16	1.32	1.06	0.26	81	80	67	2.14	1.90	105	0.015	97	97	11.9	0.11	1.21		124.4	178.3	169.8	53.4	177.8	330	74	75	67		1.001	10.050	1252
520	83.885	84.955		0.16	0.16	1.31	1.06	0.26	81	80	67	2.14	1.90	105	0.014	101	100	11.4	0.47	1.22		124.9	178.8	170.3	53.5	178.4	329	74	75	67		1.001	10.211	1276
521	84.045	85.117		0.16	0.16	1.31	1.06	0.26	81	80	67	2.15	1.90	105	0.015	97	97	11.2	0.25	1.11		125.4	179.4	171.5	53.6	179.0	328	74	75	67		1.001	9.241	1160
522	84.204	85.279		0.16	0.16	1.31	1.06	0.26	81	80	67	2.13	1.90	105	0.014	99	100	10.9	0.31	1.17		125.7	180.0	172.1	53.8	179.5	328	74	75	67		1.001	9.724	1224
523	84.364	85.440		0.16	0.16	1.31	1.06	0.26	81	80	67	2.13	1.90	105	0.015	97	96	10.5	0.38	1.03		126.5	180.9	173.9	53.9	180.4	328	74	75	67		1.001	8.598	1089
524	84.524	85.603		0.16	0.16	1.31	1.08	0.26	81	80	67	2.12	1.80	88	0.013	102	103	10.4	0.12	1.01		127.1	181.4	174.5	53.9	181.0	305	74	74	67		1.001	8.430	1073
525	84.685	85.766		0.16	0.16	1.32	1.07	0.26	81	80	67	2.12	1.80	82	0.013	102	102	10.4	-0.02	0.99		127.2	181.7	174.7	54.0	181.3	283	73	74	67		1.001	8.273	1054
526	84.846	85.929		0.16	0.16	1.32	1.07	0.26	81	80	67	2.11	1.8	79	0.012	106	106	10.3	0.10	1.03		127.2	181.6	174.8	54.1	181.3	271	73	74	67		1.001	8.583	1093
527	85.006	86.091		0.16	0.16	1.31	1.07	0.26	81	80	67	2.13	1.8	78	0.012	105	106	10.3	0.01	1.01		127.0	181.4	174.7	54.2	181.1	261	72	73	67		1.001	8.415	1070
528	85.166	86.253		0.16	0.16	1.32	1.07	0.26	81	80	67	2.12	1.8	77	0.014	97	98	10.2	0.08	1.03		126.9	181.4	174.6	54.2	181.1	252	72	73	67		1.001	8.594	1092
529	85.327	86.416		0.16	0.16	1.31	1.07	0.26	81	80	67	2.13	1.8	76	0.013	102	102	10.1	0.09	1.01		126.8	181.3	174.5	54.2	181.0	244	72	73	67		1.001	8.433	1070
530	85.487	86.579		0.16	0.16	1.32	1.07	0.26	81	80	67	2.12	1.8	75	0.013	101	102	10.0	0.11	1.03		126.5	180.9	174.2	54.2	180.7	237	72	72	67		1.001	8.598	1089
531	85.648	86.741		0.16	0.16	1.32	1.06	0.26	81	80	67	2.14	1.8	75	0.014	98	97	10.2	-0.15	0.99		126.2	180.5	173.9	54.2	180.3	231	71	72	67		1.001	8.276	1046
532	85.808	86.903		0.16	0.16	1.32	1.06	0.26	81	80	67	2.11	1.8	75	0.014	97	97	10.0	0.19	1.03		126.0	180.5	173.8	54.2	180.2	226	71	72	67		1.001	8.598	1085
533	85.968	87.066		0.16	0.16	1.31	1.06	0.26	81	80	67	2.13	1.8	74	0.014	97	98	9.9	0.06	1.03		125.7	180.1	173.4	54.1	179.8	221	71	72	67		1.001	8.595	1082
534	86.129	87.228		0.16	0.16	1.31	1.06	0.26	81	80	67	2.12	1.9	74	0.013	101	101	10.2	-0.23	1.03		125.4	179.8	173.1	54.1	179.5	216	71	72	67		1.001	8.597	1080
535	86.290	87.391		0.16	0.16	1.3	1.06	0.26	81	80	67	2.12	1.8	74	0.014	98	98	9.8	0.33	1.05		125.1	179.5	172.9	54.1	179.2	212	71	71	67		1.001	8.754	1096
536	86.450	87.553		0.16	0.16	1.31	1.07	0.26	81	80	67	2.13	1.8	72	0.014	97	97	10.2	-0.38	0.99		124.8	179.1	172.6	54.1	178.9	208	70	71	67		1.001	8.273	1034
537	86.610	87.715		0.16	0.16	1.31	1.07	0.26	81	80	67	2.12	1.8	72	0.015	94	94	10.0	0.23	1.01		124.5	178.9	172.2	54.1	178.6	204	70	71	67		1.001	8.437	1052
538	86.771	87.878		0.16	0.16	1.32	1.07	0.26	81	80	67	2.12	1.8	71	0.014	97	98	9.9	0.07	1.01		124.2	178.6	172.0	54.1	178.3	201	70	71	67		1.001	8.435	1049
539	86.931	88.041		0.16	0.16	1.3	1.07	0.26	81	80	66	2.14	1.8	71	0.015	94	94	9.9	-0.03	1.03		123.8	178.1	171.5	54.1	177.8	197	70	70	66		1.001	8.600	1066
540	87.092	88.203		0.16	0.16	1.31	1.06	0.26	81	80	67	2.11	1.8	71	0.013	101	101	10.0	-0.06	1.01		123.5	177.7	171.1	54.0	177.5	193	70	70	67		1.001	8.436	1043
541	87.252	88.365		0.16	0.16	1.31	1.07	0.26	81	80	67	2.12	1.8	72	0.012	105	105	10.1	-0.09	0.99		123.1	177.4	170.8	54.0	177.1	189	69	70	67		1.001	8.276	1020
542	87.412	88.528		0.16	0.16	1.31	1.07	0.26	80	80	66	2.13	1.8	72	0.014	97	98	9.8	0.26	1.01		122.8	177.0	170.4	54.0	176.8	186	69	70	66		1.001	8.439	1037
543	87.572	88.691		0.16	0.16	1.31	1.07	0.26	80	80	66	2.13	1.8	72	0.013	101	102	10.0	-0.21	1.01		122.4	176.8	170.2	54.1	176.5	182	69	70	66		1.001	8.437	1034
544	87.733	88.854		0.16	0.16	1.31	1.06	0.26	80	80	67	2.11	1.8	72	0.014	98	98	9.9	0.08	0.98		121.5	176.0	169.5	54.2	175.8	179	69	70	67		1.001	8.201	998
545	87.893	89.016		0.16	0.16	1.31	1.07	0.26	80	80	67	2.13	1.8	71	0.015	94	94	10.1	-0.17	0.97		121.1	175.7	169.3	54.3	175.4	176	69	70	67		1.001	8.121	984

Elapsed Time	Particulate Sampling Data																	Fuel Weight, lb		Flow, gpm		Temperature Data, oF												
	Gas Meter Cubic Feet (1)	Gas Meter Cubic Feet (2)	Gas Meter Cubic Feet (amb)	Sample Rate, cfm (1)	Sample Rate, cfm (2)	Orifice dH (1)	Orifice dH (2)	Orifice dH (amb)	Meter oF (1)	Meter oF (2)	Meter oF (amb)	Meter Vac. in. Hg. (1)	Meter Vac. in. Hg. (2)	Dilution Tunnel Temp.	Dilution Tunnel dP	Pro. Rate (%) (1)	Pro. Rate (%) (2)	Scale Reading	Weight Change	Load Side Liquid Flow Rate	Boiler Side Liquid Flow Rate (optional)	Thermopile ΔT	Boiler to Heat Exch. Temp.	Heat Exch to Boiler Temp.	Inlet Load Temp.	Outlet Load Temp.	Stack	Filter (1)	Filter (2)	Ambient		Specific Heat of Inlet Water (BTU/lb-°F)	Mass Flow Rate of Inlet Water (lb/min)	Heat Output, Btu
546	88.053	89.178		0.16	0.16	1.31	1.07	0.26	80	80	67	2.11	1.8	71	0.013	101	101	10.0	0.12	1.00		120.5	175.2	168.9	54.4	174.9	173	69	69	67		1.001	8.313	1003
547	88.214	89.341		0.16	0.16	1.31	1.07	0.26	80	80	67	2.13	1.8	72	0.014	98	98	10.0	-0.05	0.99		120.1	175.0	168.6	54.5	174.7	170	69	69	67		1.001	8.290	997
548	88.374	89.504		0.16	0.16	1.32	1.07	0.26	80	80	67	2.13	1.8	72	0.014	97	98	10.0	0.01	1.03		119.7	174.4	168.1	54.6	174.2	167	69	69	67		1.001	8.601	1030
549	88.535	89.666		0.16	0.16	1.32	1.06	0.26	80	80	68	2.11	1.8	72	0.012	106	105	10.1	-0.02	1.03		119.2	174.1	167.7	54.6	173.8	164	69	69	68		1.001	8.599	1027
550	88.695	89.829		0.16	0.16	1.32	1.07	0.26	80	80	68	2.11	1.8	73	0.013	101	102	10.0	0.09	0.99		118.7	173.5	167.3	54.7	173.4	161	69	69	68		1.001	8.277	983
551	88.856	89.991		0.16	0.16	1.31	1.07	0.26	80	80	68	2.11	1.8	73	0.012	106	105	10.1	-0.11	1.03		118.2	173.3	167.0	54.7	172.9	159	69	69	68		1.001	8.599	1018
552	89.016	90.154		0.16	0.16	1.32	1.06	0.26	80	80	68	2.11	1.8	72	0.012	105	106	10.1	0.03	0.97		118.1	172.9	166.7	54.6	172.7	156	69	69	68		1.001	8.114	959
553	89.177	90.316		0.16	0.16	1.32	1.06	0.26	80	80	68	2.11	1.8	72	0.014	98	97	10.0	0.03	0.99		117.6	172.2	166.0	54.5	172.1	154	69	69	68		1.001	8.274	974
554	89.337	90.478		0.16	0.16	1.32	1.07	0.26	80	80	68	2.11	1.8	72	0.013	101	101	10.0	-0.01	0.97		117.1	171.9	165.7	54.5	171.6	152	69	69	68		1.001	8.114	951
555	89.498	90.641		0.16	0.16	1.31	1.07	0.26	80	80	68	2.12	1.8	72	0.013	101	102	10.1	-0.04	1.03		116.7	171.3	165.3	54.5	171.3	150	69	69	68		1.001	8.600	1005
556	89.659	90.803		0.16	0.16	1.31	1.07	0.26	80	80	68	2.12	1.8	72	0.013	101	101	10.2	-0.17	0.99		116.2	170.9	164.8	54.5	170.7	147	69	69	68		1.001	8.280	963
557	89.819	90.967		0.16	0.16	1.31	1.07	0.26	80	80	68	2.12	1.8	72	0.014	97	98	10.0	0.25	1.07		115.6	170.4	164.4	54.6	170.2	145	69	69	68		1.001	8.921	1033
558	89.980	91.128		0.16	0.16	1.31	1.06	0.26	80	80	67	2.12	1.8	72	0.013	101	100	10.2	-0.16	1.03		114.9	169.8	163.7	54.7	169.6	143	69	69	67		1.001	8.591	988
559	90.140	91.291		0.16	0.16	1.31	1.07	0.26	80	80	67	2.13	1.8	71	0.014	97	98	10.1	0.11	0.98		114.6	169.6	163.5	54.7	169.3	142	69	69	67		1.001	8.148	934
560	90.300	91.453		0.16	0.16	1.3	1.07	0.26	80	80	67	2.13	1.8	71	0.012	105	105	10.1	-0.08	1.01		114.4	169.4	163.3	54.7	169.1	140	69	69	67		1.001	8.442	967
561	90.461	91.616		0.16	0.16	1.3	1.07	0.26	80	80	67	2.12	1.8	71	0.013	101	101	10.1	-0.01	1.14		113.7	168.6	162.0	54.7	168.4	138	69	69	67		1.001	9.479	1079
562	90.621	91.779		0.16	0.16	1.3	1.06	0.26	80	80	67	2.12	1.8	71	0.013	101	101	10.2	-0.02	1.08		113.3	168.1	161.4	54.7	168.0	136	69	69	67		1.001	8.982	1018
563	90.782	91.941		0.16	0.16	1.31	1.07	0.26	80	80	67	2.12	1.8	71	0.015	94	94	10.1	0.06	1.17		112.5	167.3	160.6	54.6	167.1	134	69	69	67		1.001	9.736	1097
564	90.942	92.103		0.16	0.16	1.31	1.07	0.26	80	80	67	2.13	1.8	70	0.014	97	97	10.1	-0.02	1.11		112.3	167.1	160.3	54.5	166.8	132	69	69	67		1.001	9.243	1039
565	91.102	92.266		0.16	0.16	1.31	1.07	0.26	81	80	67	2.13	1.8	70	0.014	97	98	10.1	0.02	1.11		111.8	166.3	159.6	54.4	166.2	131	68	69	67		1.001	9.245	1035
566	91.262	92.426		0.16	0.16	1.28	0.97	0.26	80	80	67	2.21	2.1	78	0.014	98	97	10.1	0.03	1.11		111.2	165.7	159.1	54.3	165.6	154	69	69	67		1.001	9.241	1029
567	91.420	92.580		0.16	0.15	1.3	0.99	0.26	81	80	67	2.18	2.1	77	0.015	93	90	10.0	0.06	1.17		110.7	165.2	158.1	54.3	165.0	173	69	69	67		1.001	9.727	1078
568	91.580	92.739		0.16	0.16	1.3	1.02	0.26	81	80	67	2.15	2	72	0.014	97	95	10.0	-0.01	1.19		110.3	164.7	157.8	54.2	164.5	158	69	69	67		1.001	9.892	1092
569	91.739	92.898		0.16	0.16	1.31	1.02	0.26	80	80	67	2.14	2	70	0.014	96	95	10.0	0.01	1.13		109.7	164.0	157.0	54.1	163.8	148	68	69	67		1.001	9.405	1033
570	91.899	93.057		0.16	0.16	1.3	1.03	0.26	80	80	67	2.16	2	70	0.014	97	95	10.0	0.01	1.19		109.5	163.6	156.7	54.0	163.5	142	68	69	67		1.001	9.891	1084
571	92.060	93.217		0.16	0.16	1.3	1.02	0.26	80	80	67	2.14	2	72	0.014	98	96	10.1	-0.11	1.15		108.8	162.9	156.0	53.9	162.7	137	68	69	67		1.001	9.572	1043
572	92.220	93.376		0.16	0.16	1.3	1.03	0.26	80	80	67	2.16	2	71	0.012	105	103	10.1	0.00	1.30		108.0	162.1	154.2	53.9	161.8	134	68	69	67		1.001	10.863	1174
573	92.379	93.536		0.16	0.16	1.3	1.03	0.26	80	80	67	2.14	2	71	0.013	100	100	10.2	-0.05	1.30		107.2	161.4	153.5	53.9	161.2	131	68	68	67		1.001	10.861	1166
574	92.539	93.695		0.16	0.16	1.33	1.05	0.26	80	80	67	2.22	2.1	78	0.015	94	93	10.1	0.03	1.30		106.8	160.8	153.0	53.9	160.7	159	69	69	67		1.001	10.862	1161
575	92.701	93.856		0.16	0.16	1.34	1.07	0.26	80	80	67	2.2	2.1	81	0.016	93	91	10.0	0.11	1.30		106.2	160.2	152.5	53.9	160.1	179	69	69	67		1.001	10.862	1155
576	92.863	94.020		0.16	0.16	1.35	1.08	0.26	80	80	67	2.2	2.1	82	0.012	107	107	9.9	0.17	1.30		105.6	159.7	151.9	53.9	159.5	191	69	69	67		1.001	10.863	1148
577	93.026	94.183		0.16	0.16	1.34	1.08	0.26	80	80	67	2.2	2.1	84	0.013	104	103	9.8	0.04	1.36		104.7	159.0	151.1	53.9	158.7	200	69	69	67		1.001	11.349	1190
578	93.188	94.346		0.16	0.16	1.34	1.08	0.26	80	80	67	2.2	2.1	85	0.014	100	99	9.6	0.25	1.32		104.5	158.6	150.9	53.9	158.4	206	70	69	67		1.001	11.017	1153
579	93.350	94.509		0.16	0.16	1.35	1.08	0.26	80	80	67	2.2	2.1	86	0.015	96	96	9.6	0.02	1.36		104.2	158.4	150.7	53.9	158.1	215	70	70	67		1.001	11.349	1184
580	93.512	94.672		0.16	0.16	1.34	1.08	0.26	80	80	67	2.2	2.1	87	0.017	91	90	9.4	0.17	1.34		103.8	158.0	150.3	53.9	157.8	220	70	70	67		1.001	11.184	1163
581	93.675	94.835		0.16	0.16	1.34	1.07	0.26	80	80	68	2.21	2.1	88	0.014	100	99	9.2	0.21	1.32		103.7	158.0	150.2	54.0	157.7	225	70	70	68		1.001	11.026	1145
582	93.836	94.998		0.16	0.16	1.34	1.07	0.26	80	80	68	2.22	2.1	89	0.014	99	99	9.0	0.16	1.26		103.3	157.6	149.8	54.0	157.3	229	70	70	68		1.001	10.540	1090
583	93.998	95.160		0.16	0.16	1.35	1.06	0.26	80	80	68	2.23	2.1	89	0.013	104	102	8.8	0.20	1.26		103.1	157.5	149.7	54.1	157.2	233	71	70	68		1.001	10.534	1087
584	94.160	95.321		0.16	0.16	1.34	1.05	0.26	80	80	68	2.23	2.1	90	0.015	97	95	8.7	0.13	1.27		102.7	157.4	149.6	54.3	157.0	238	71	70	68		1.001	10.553	1086
585	94.322	95.482		0.16	0.16	1.32	1.05	0.26	80	80	68	2.23	2.2	91	0.014	100	98	8.4	0.27	1.34		102.6	157.4	149.7	54.4	157.1	241	71	71	68		1.001	11.165	1147
586	94.483	95.643		0.16	0.16	1.32	1.03	0.26	80	80	68	2.23	2.2	91	0.014	99	98	8.2	0.20	1.36		102.6	157.4	149.7	54.5	157.1	244	71	71	68		1.001	11.348	1165
587	94.644	95.802		0.16	0.16	1.32	1.03	0.26	80	80	68	2.24	2.2	92	0.014	100	97	8.2	0.02	1.26		102.4	157.3	149.7	54.6	157.1	248	72	71	68		1.001	10.511	1078
588	94.805	95.961		0.16	0.16	1.33	1.02	0.26	80	80	68	2.27	2.2	92	0.013	103	101	8.0	0.19	1.32		102.3	157.4	149.7	54.8	157.1	251	72	71	68		1.001	11.014	1128
589	94.966	96.120		0.16	0.16	1.32	1.02	0.26	80	80	68	2.26	2.3	93	0.014	100	97	7.8	0.22	1.32		102.6	157.6	149.8	54.7	157.3	254	72	71	68		1.001	11.015	1131
590	95.127	96.277		0.16	0.16	1.31	0.99	0.26	80	80	68	2.29	2.3	94	0.011	113	108	7.5	0.32	1.32		102.5	157.6	149.9	54.7	157.2	260	72	71	68		1.001	11.015	1131
591	95.287	96.434		0.16	0.16	1.31	0.96	0.26	80	80	68	2.29	2.5	95	0.012	107	104	7.1	0.37	1.30		103.0	157.9	150.2	54.6	157.6	273	72	72	68		1.001	10.858	1120
592	95.446	96.585		0.16	0.15	1.29	0.92	0.26	80	80	68	2.31	2.6	96	0.013	102	96	6.9	0.24	1.28		103.3	158.4	150.6	54.7	158.0	281	72	72	68		1.001	10.656	1102
593	95.605	96.736		0.16	0.15	1.29	0.91	0.26	80	80	68	2.34	2.7	97	0.013	103	96	6.5	0.31	1.28		103.7	158.7	150.9	54.7	158.4	287	72	72	68		1.001	10.697	1110
594	95.764	96.885		0.16	0.15	1.29	0.89	0.26	80	80	68	2.36	2.7	98	0.012	107	99	6.3	0.21	1.36		104.3	159.3	151.5	54.6	158.9	291	73	72	68		1.001	11.344	1185
595	95.922	97.033		0.16	0.15	1.28	0.87	0.26	80	80	68	2.37	2.8	99	0.012	106	98	6.1	0.24	1.24		104.9	159.8	152.0	54.6	159.5	295	73	72	68		1.001	10.376	1090
596	96.080	97.179		0.16	0.15	1.28	0.85	0.26	81	80	68	2.37	2.9	99	0.014	98	90	5.6	0.48	1.34		105.2	160.1	152.3	54.6	159.8	297	73	72	68		1.001	11.184	1178
597	96.238	97.323		0.16	0.14	1.27	0.83	0.26	81	80	68	2.41	2.9	102	0.014	98	89	5.4	0.20	1.32		105.9	160.8	152.9	54.5	160.5	300	73	72	68		1.001	11.021	1169
598	96.396	97.476		0.16	0.15	1.36	1.10	0.26	81	80	68	2.52	3.6	101	0.012	106	102	5.1	0.34	1.28		106.6	161.4	153.5	54.4	161.0	301	74	72	68		1.001	10.698	1142
599	96.559	97.640		0.16	0.16	1.35	1.09	0.26	81	80	69	2.53	3.7	101	0.013	105	105	4.8	0.24	1.24		107.5	162.0	154.1	54.1	161.6	302	74	73	69		1.001	10.373	1117
600	96.721	97.804		0.16	0.16	1.34	1.08	0.26	81	80	68	2.56	3.70	101	0.013	105	105	4.5	0.35	1.30		108.4	162.6	154.7	53.8	162.2	304	74	73	68		1.001	10.859	1178
601	96.883	97.966		0.16	0.16	1.34	1.04	0.26	81	80	69	2.59	3.90	101	0.013	105	104	4.1	0.42	1.32		109.0	163.2	155.2	53.8	162.7	307	75	74	69		1.001	11.019	1202
602	97.044	98.125		0.16	0.16	1.33	1.02	0.26	81	80	69	2.59	3.90	102	0.011	113	111	4.0	0.11	1.26		109.6	163.8	155.7	53.8	163.4	309	75	74	69		1.001	10.535	1156
603	97.204	98.284		0.16	0.16	1.33	1.02	0.26	81	80	69	2.60	4.00	102	0.013	103	102	3.6	0.33	1.24		110.5	164.4	156.4	53.6	164.1	312	75	74	69		1.001	10.373	1148
604	97.365	98.443		0.16	0.16	1.32	1.03	0.26	81	80	68	2.61	4.00	102	0.015	97	95	3.4	0.20	1.26		111.1	165.1	157.0	53.6	164.7	313	75	74	68		1.001	10.539	1172
605	97.525	98.602		0.16	0.16	1.32	1.03	0.26	81	80	68	2.61	4.00	102	0.014	100	98	3.1	0.33	1.30		111.7	165.5	157.4	53.5	165.2	314	75	75	68		1.001	10.861	1214
606	97.686	98.762		0.16	0.16	1.31	1.03	0.26	81	80	69	2.62	4.10	102	0.013	104	102	2.6	0.47	1.11		112.2	166.2	158.7	53.5	165.7	317	75	75	69		1.001	9.239	1038
607	97.846	98.921		0.16	0.16	1.31	1.02	0.26	81	80	68	2.63	4.10	102	0.013	103	102	2.3	0.37	1.13		113.2	167.3	159.9	53.5	166.7	318	75	75	68		1.001	9.402	1066

Elapsed Time	Particulate Sampling Data																	Fuel Weight, lb		Flow, gpm		Temperature Data, oF												
	Gas Meter Cubic Feet (1)	Gas Meter Cubic Feet (2)	Gas Meter Cubic Feet (amb)	Sample Rate, cfm (1)	Sample Rate, cfm (2)	Orifice dH (1)	Orifice dH (2)	Orifice dH (amb)	Meter oF (1)	Meter oF (2)	Meter oF (amb)	Meter Vac. in. Hg. (1)	Meter Vac. in. Hg. (2)	Dilution Tunnel Temp.	Dilution Tunnel dP	Pro. Rate (%) (1)	Pro. Rate (%) (2)	Scale Reading	Weight Change	Load Side Liquid Flow Rate	Boiler Side Liquid Flow Rate (optional)	Thermopile ΔT	Boiler to Heat Exch. Temp.	Heat Exch to Boiler Temp.	Inlet Load Temp.	Outlet Load Temp.	Stack	Filter (1)	Filter (2)	Ambient		Specific Heat of Inlet Water (BTU/lb-°F)	Mass Flow Rate of Inlet Water (lb/min)	Heat Output, Btu
608	98.005	99.080		0.16	0.16	1.30	1.02	0.26	81	80	68	2.63	4.10	102	0.014	99	98	2.1	0.15	1.13		114.1	167.9	160.6	53.5	167.6	318	75	75	68		1.001	9.402	1074
609	98.165	99.239		0.16	0.16	1.31	1.03	0.26	81	80	68	2.63	4.10	102	0.013	103	102	1.7	0.37	1.07		114.7	168.6	161.3	53.6	168.3	318	75	75	68		1.001	8.917	1024
610	98.325	99.398		0.16	0.16	1.31	1.03	0.26	81	80	68	2.64	4.10	101	0.015	96	95	1.7	0.09	1.15		115.2	169.2	161.9	53.6	168.9	318	74	75	68		1.001	9.569	1104
611	98.485	99.557		0.16	0.16	1.31	1.03	0.26	81	80	68	2.64	4.00	101	0.015	96	95	1.2	0.41	1.13		115.9	170.0	162.7	53.7	169.6	316	74	75	68		1.001	9.426	1094
612	98.645	99.717		0.16	0.16	1.31	1.04	0.26	81	81	68	2.64	4.00	101	0.014	100	98	1.1	0.10	1.17		116.4	170.6	163.2	53.8	170.2	315	74	75	68		1.001	9.725	1133
613	98.805	99.877		0.16	0.16	1.32	1.04	0.26	81	81	68	2.64	4.00	101	0.014	100	98	0.8	0.39	1.16		116.9	171.1	163.8	53.9	170.8	315	74	75	68		1.001	9.672	1132
614	98.965	100.036		0.16	0.16	1.31	1.03	0.26	81	81	68	2.66	4.00	100	0.014	99	98	0.6	0.20	1.12		117.5	171.6	164.3	53.9	171.4	315	74	75	68		1.001	9.368	1102
615	99.124	100.195	166.262	0.16	0.16	1.31	1.00	0.26	81	81	68	2.66	4.10	101	0.014	99	98	0.0	0.60	1.19		118.3	172.8	165.2	53.9	172.3	319	74	75	68		1.001	9.893	1172
	99.124	100.195	166.262			1.33	1.08	0.26	80	80	68			87	0.014					1.14	#DIV/0!	115.9	170.0	162.9	53.8	169.7		72.06	72.45		#DIV/0!			1099
																																	TOTAL:	675623

TF_{avg}	168.997
TI_{avg}	160.434

OMNI-Test Laboratories

Manufacturer: Central Boiler
Model: Edge 360
Date: 12/20/19
Run: 6
Control #: 0117WB040E
Test Duration: 615
Output Category: III

Technicians: _____

_____

_____

Test Results in Accordance with CSA B415.1-09

	HHV Basis	LHV Basis
Overall Efficiency	78.0%	84.0%
Combustion Efficiency	95.5%	95.5%
Heat Transfer Efficiency	82%	88.0%

Output Rate (kJ/h)	67,620	64,145	**(Btu/h)**
Burn Rate (kg/h)	4.36	9.61	**(lb/h)**
Input (kJ/h)	86,739	82,281	**(Btu/h)**

Test Load Weight (dry kg)	44.71	98.53	**dry lb**
MC wet (%)	18.23		
MC dry (%)	22.29		
Particulate (g)	31.74		
CO (g)	2,863		
Test Duration (h)	10.25		

Emissions	**Particulate**	**CO**
g/MJ Output	0.05	4.13
g/kg Dry Fuel	0.71	64.03
g/h	3.10	279.28
lb/MM Btu Output	0.11	9.60

Air/Fuel Ratio (A/F)	15.67

VERSION: 2.2 12/14/2009

VERSION: 2.2 12/14/2009

Manufacturer: Central Boiler
Model: Edge 360
Date: 12/20/2019
Run: 6
Control #: 0117WB040E
Test Duration: 615
Input Category: III

Appliance Type: Non-Cat (Cat, Non

Temp. Units F (F or C)
Weight Units lb (kg or lb)

Fuel Data

			Oak	
Wood Moisture (% wet):	18.23	**HHV**	19,887	kj/kg
Load Weight (lb wet):	120.50	**%C**	50	
Burn Rate (dry kg/h):	4.36	**%H**	6.6	
Total Particulate Emissions:	31.74 g	**%O**	42.9	
		%ASH	0.5	

	Averages	**0.55**	**7.25**	**#DIV/0!**	**245.54**	**67.95**
					Temp. (ºF)	
Elapsed	**Fuel Weight**	**Flue Gas Composition (%)**			**Flue**	**Room**
Time (min)	**Remaining (lb)**	**CO**	**CO_2**	**O_2**	**Gas**	**Temp**
0	120.5	1.9	10.1		289	69
1	119.8	0.6	6.9		274	70
2	119.2	0.8	4.4		269	70
3	118.6	0.6	19.3		300	69
4	117.9	0.1	18.4		319	70
5	117.5	0.1	17.6		331	69
6	117.0	0.1	17.2		340	69
7	116.5	0.1	17.1		346	70
8	115.9	0.1	16.9		351	70
9	115.2	0.1	16.9		355	70
10	114.7	0.1	16.8		358	69
11	114.2	0.1	16.7		361	70
12	113.7	0.1	16.4		362	70
13	113.1	0.1	16.2		363	70
14	112.5	0.2	15.9		363	70
15	112.1	0.1	16.1		364	70
16	111.7	0.1	16.0		363	70
17	111.1	0.1	15.6		364	70
18	110.5	0.1	15.5		365	70
19	110.1	0.1	15.6		367	69
20	109.5	0.1	15.5		368	69
21	109.0	0.1	15.4		370	70

22	108.6	0.1	15.3		371	69
23	108.1	0.1	15.0		371	70
24	107.7	0.1	14.8		371	70
25	107.3	0.1	11.5		338	69
26	107.2	0.2	7.6		312	69
27	107.2	0.3	4.6		296	69
28	107.2	0.3	4.5		283	69
29	107.3	0.2	3.5		272	69
30	107.1	0.2	2.9		263	69
31	107.1	0.1	2.6		255	69
32	107.2	0.1	2.4		248	69
33	107.1	0.1	2.2		242	70
34	107.0	0.1	2.1		235	69
35	107.2	0.1	2.1		230	69
36	107.2	0.2	2.1		225	69
37	107.2	0.1	1.7		222	69
38	107.2	0.1	1.2		219	69
39	107.2	0.1	0.7		216	69
40	107.2	0.0	0.6		212	69
41	107.2	0.1	0.7		208	69
42	107.3	0.1	0.9		204	69
43	107.3	0.1	1.1		200	69
44	107.2	0.1	1.2		196	69
45	107.2	0.1	1.3		193	69
46	107.1	0.1	1.4		189	70
47	107.3	0.1	1.4		185	69
48	107.3	0.2	1.6		182	69
49	107.3	0.2	1.7		179	69
50	107.2	0.2	1.9		176	69
51	107.3	0.3	2.4		173	69
52	107.3	0.3	2.6		170	69
53	107.2	0.3	3.0		168	70
54	107.3	0.3	3.0		165	69
55	107.3	0.4	3.2		162	69
56	107.3	0.4	3.3		160	69
57	107.3	0.4	3.3		158	69
58	107.3	0.4	3.5		156	69
59	107.3	0.4	3.5		154	69
60	107.3	0.4	3.3		151	69
61	107.4	0.4	3.3		149	69
62	107.3	0.4	3.4		147	69
63	107.3	0.3	3.2		145	69

64	107.4	0.3	3.2		143	69
65	107.3	0.3	3.2		142	69
66	107.4	0.3	3.0		140	69
67	107.3	0.6	6.1		163	69
68	107.1	1.1	4.3		184	69
69	107.2	1.1	3.9		167	69
70	107.1	0.8	3.2		156	69
71	107.1	0.7	2.9		150	69
72	107.2	0.6	3.0		145	69
73	107.2	0.6	3.0		142	69
74	107.2	0.5	3.0		139	69
75	107.0	0.5	3.0		137	69
76	107.2	0.4	2.8		135	69
77	107.1	0.4	2.7		134	69
78	107.0	0.6	4.2		172	69
79	106.6	1.7	5.4		200	69
80	106.4	2.1	8.0		224	69
81	105.9	1.2	12.7		251	69
82	105.4	0.5	15.1		278	69
83	105.0	0.3	15.7		297	69
84	104.5	0.2	16.2		311	69
85	104.1	0.2	16.3		322	69
86	103.4	0.1	16.3		330	69
87	102.8	0.1	16.2		337	69
88	102.2	0.1	15.9		341	69
89	101.7	0.1	15.6		344	69
90	101.2	0.1	15.8		347	69
91	100.6	0.1	15.6		348	69
92	100.2	0.1	15.4		351	69
93	99.7	0.1	15.3		352	69
94	99.0	0.1	15.2		353	69
95	98.5	0.1	15.2		354	69
96	97.9	0.1	15.0		356	69
97	97.5	0.2	14.7		358	69
98	97.0	0.2	14.5		360	69
99	96.3	0.2	14.2		361	69
100	95.7	0.1	13.8		362	69
101	95.4	0.1	13.6		363	69
102	94.8	0.1	13.6		364	69
103	94.6	0.2	13.4		364	69
104	93.8	0.2	13.1		364	69
105	93.5	0.3	12.9		364	69

106	92.9	0.4	12.7		363	69
107	92.4	0.4	12.6		363	69
108	92.1	0.2	12.9		363	69
109	91.5	0.2	12.8		364	69
110	91.0	0.3	12.6		364	69
111	90.7	0.5	12.1		363	69
112	90.1	0.6	11.9		363	69
113	89.8	0.6	11.7		362	69
114	89.3	0.8	11.6		361	69
115	88.8	0.8	11.4		361	69
116	88.6	0.6	8.5		331	69
117	88.4	0.3	11.7		307	69
118	88.2	0.4	8.8		291	69
119	88.1	0.4	10.2		279	69
120	88.1	0.6	7.8		269	69
121	88.1	0.9	5.2		259	69
122	88.0	0.8	4.0		251	69
123	88.1	0.8	3.5		244	69
124	87.8	0.7	3.3		238	69
125	87.8	0.6	3.2		232	69
126	87.9	0.5	3.0		227	69
127	87.8	0.5	2.8		222	69
128	87.8	0.3	2.2		220	68
129	87.7	0.2	1.5		217	69
130	87.8	0.2	1.0		213	69
131	87.8	0.1	1.0		209	69
132	87.9	0.2	1.1		205	69
133	87.8	0.2	1.2		201	69
134	87.8	0.2	1.4		197	69
135	87.9	0.2	1.6		194	69
136	87.9	0.2	1.7		190	69
137	87.9	0.3	2.0		187	69
138	87.8	0.3	2.0		184	69
139	88.0	0.3	2.0		180	69
140	87.8	0.3	2.2		177	69
141	87.9	0.3	2.3		174	69
142	87.9	0.3	2.4		171	69
143	87.9	0.3	2.4		168	69
144	87.9	0.3	2.4		166	69
145	87.8	0.3	2.5		163	69
146	87.9	0.3	2.3		161	69
147	87.9	0.3	2.3		158	69

148	88.0	0.3	2.3		156	69
149	88.0	0.3	2.2		154	69
150	88.0	0.3	2.2		151	69
151	88.0	0.2	2.1		149	69
152	88.0	0.2	2.1		147	69
153	88.0	0.2	2.1		145	69
154	87.9	0.2	2.0		143	69
155	87.9	0.2	2.0		142	69
156	87.9	0.2	2.0		140	68
157	88.0	0.2	1.9		138	69
158	87.9	0.5	4.2		161	69
159	87.8	0.1	1.3		177	69
160	87.8	0.1	1.0		163	69
161	87.8	0.1	0.9		154	69
162	87.6	0.1	1.0		147	69
163	87.8	0.1	1.1		143	69
164	87.8	0.1	1.1		140	69
165	87.7	0.1	1.0		137	69
166	87.8	0.1	1.0		135	69
167	87.8	0.1	1.1		133	69
168	87.8	0.1	1.1		131	68
169	87.8	0.1	1.1		129	69
170	87.7	0.1	1.1		128	68
171	87.7	0.2	2.5		153	69
172	87.6	0.1	0.8		171	69
173	87.6	0.1	0.9		181	69
174	87.4	0.3	1.3		186	69
175	87.2	0.4	2.2		190	68
176	87.1	0.7	3.4		196	68
177	86.9	0.9	4.5		202	68
178	86.6	1.1	5.4		209	69
179	86.5	1.2	6.2		216	68
180	86.3	1.2	6.9		223	68
181	86.0	1.1	7.5		230	68
182	85.6	1.0	8.2		237	69
183	85.4	0.9	8.8		244	68
184	85.1	0.9	9.4		252	68
185	84.6	0.9	10.0		259	68
186	84.2	0.9	10.4		266	68
187	83.9	1.0	10.7		274	68
188	83.5	1.0	11.2		281	68
189	83.1	1.0	11.5		288	68

190	82.6	1.0	11.5		294	68
191	82.0	1.0	11.5		299	68
192	81.7	1.0	11.6		304	68
193	81.2	0.9	11.7		308	68
194	80.9	0.9	11.9		312	68
195	80.4	0.8	11.9		315	69
196	80.0	0.8	12.0		318	69
197	79.5	0.8	11.7		320	68
198	79.1	0.9	11.4		321	68
199	78.6	1.0	11.1		321	69
200	78.1	1.0	11.0		321	69
201	77.7	1.0	10.8		320	69
202	77.2	1.0	10.7		319	69
203	77.0	1.0	10.8		319	68
204	76.5	1.0	10.7		319	68
205	75.9	1.0	10.4		318	68
206	75.5	1.0	10.5		318	68
207	74.9	1.0	10.5		318	68
208	74.8	1.0	10.6		318	68
209	74.0	0.1	16.3		331	68
210	73.4	0.1	18.1		343	68
211	72.5	0.1	17.0		349	68
212	72.2	0.1	16.2		353	68
213	71.7	0.1	15.8		355	68
214	71.1	0.1	15.9		357	68
215	70.5	0.1	15.6		358	68
216	69.8	0.1	15.3		360	68
217	69.3	0.1	15.2		361	68
218	68.8	0.1	15.0		363	68
219	68.3	0.0	14.8		366	68
220	67.8	0.0	14.7		368	68
221	67.3	0.0	14.5		370	68
222	66.8	0.0	14.6		371	68
223	66.2	0.0	14.6		372	68
224	65.6	0.0	14.8		374	68
225	65.1	0.0	14.6		375	68
226	64.8	0.0	14.4		376	68
227	64.3	0.0	13.9		376	68
228	64.0	0.1	12.2		351	68
229	63.7	0.1	12.9		321	68
230	63.5	0.2	10.4		303	68
231	63.4	0.2	11.6		289	68

232	63.5	0.2	9.4		278	68
233	63.3	0.4	7.4		267	68
234	63.1	0.7	5.5		259	68
235	63.3	0.8	4.4		251	68
236	63.1	0.7	3.6		244	68
237	63.1	0.7	3.0		238	68
238	63.2	0.7	2.8		232	68
239	63.0	0.6	2.7		226	68
240	63.1	0.5	2.4		224	68
241	63.0	0.3	1.6		222	68
242	63.0	0.3	1.3		218	68
243	63.0	0.3	1.5		214	68
244	63.1	0.4	1.8		210	68
245	63.1	0.5	2.1		206	68
246	63.1	0.5	2.5		202	68
247	63.0	0.6	2.7		198	68
248	63.0	0.6	2.9		194	68
249	63.0	0.6	3.0		190	68
250	63.0	0.6	3.1		187	68
251	63.0	0.7	3.3		183	68
252	63.1	0.7	3.3		180	68
253	63.0	0.7	3.5		177	68
254	63.0	0.7	3.3		174	68
255	63.2	0.7	3.5		171	68
256	63.2	0.7	3.3		168	68
257	63.1	0.6	3.3		166	68
258	63.1	0.6	3.3		163	68
259	62.9	0.6	3.3		161	68
260	63.2	0.6	3.1		158	68
261	63.2	0.6	3.0		156	68
262	63.2	0.5	2.8		153	68
263	63.2	0.5	2.8		151	67
264	63.2	0.5	2.7		149	68
265	63.2	0.5	2.7		147	68
266	63.1	0.5	2.7		145	68
267	63.1	0.5	2.7		143	67
268	63.1	0.5	2.7		141	68
269	63.2	0.4	2.4		139	67
270	63.1	0.5	2.8		156	68
271	62.8	0.3	2.4		180	67
272	62.8	0.4	2.3		169	67
273	62.8	0.3	1.8		158	67

274	62.8	0.3	1.7		150	67
275	62.8	0.2	1.7		145	67
276	62.8	0.2	1.6		141	67
277	62.9	0.2	1.5		139	67
278	62.8	0.2	1.5		136	67
279	62.9	0.2	1.4		134	67
280	62.8	0.2	1.4		132	67
281	62.7	0.3	2.8		158	67
282	62.6	0.4	2.0		180	67
283	62.3	0.7	3.0		195	67
284	62.2	0.9	4.6		208	67
285	61.9	1.0	5.9		218	67
286	62.0	1.1	6.8		227	67
287	61.6	1.2	7.7		235	67
288	61.4	1.1	8.4		243	67
289	61.0	1.1	9.5		252	67
290	60.7	1.0	10.7		262	67
291	60.4	0.7	11.3		273	67
292	60.0	0.6	11.6		282	67
293	59.6	0.5	11.6		290	67
294	59.2	0.4	11.8		296	67
295	58.8	0.4	12.2		302	67
296	58.5	0.5	12.2		308	67
297	58.0	0.5	12.6		314	67
298	57.6	0.4	12.9		320	67
299	57.1	0.5	12.6		323	67
300	56.6	0.7	12.1		325	67
301	56.5	0.7	12.0		326	67
302	55.9	0.8	12.0		328	67
303	55.7	0.9	11.8		328	67
304	55.0	0.8	11.8		329	67
305	54.8	0.8	12.0		330	67
306	54.1	0.8	12.0		332	67
307	53.9	0.8	12.4		334	67
308	53.5	0.8	12.2		335	67
309	52.9	0.8	12.1		335	67
310	52.6	0.8	12.0		336	67
311	52.1	0.8	12.2		338	67
312	51.7	0.3	14.2		344	67
313	51.2	0.3	14.1		347	67
314	50.6	0.5	13.5		349	67
315	50.2	0.3	14.0		351	67

316	49.7	0.6	13.0		351	67
317	49.4	0.7	12.7		351	67
318	48.9	0.7	12.6		351	67
319	48.3	0.6	12.7		352	67
320	47.9	0.7	12.7		353	67
321	47.6	0.5	13.0		354	67
322	47.2	0.4	13.5		357	67
323	46.6	0.2	14.0		360	67
324	46.1	0.2	14.1		363	67
325	45.6	0.2	14.1		365	67
326	45.3	0.1	12.0		335	67
327	45.1	0.2	14.0		309	67
328	44.8	0.2	11.3		293	67
329	44.8	0.2	13.2		280	67
330	44.7	0.2	10.5		269	67
331	44.7	0.3	7.9		260	67
332	44.6	0.5	5.8		252	67
333	44.6	0.5	4.4		244	67
334	44.6	0.4	3.5		238	67
335	44.4	0.4	2.9		232	67
336	44.7	0.4	2.5		226	67
337	44.5	0.4	2.1		221	67
338	44.4	0.3	1.6		219	67
339	44.5	0.2	1.1		216	67
340	44.5	0.1	0.8		212	67
341	44.4	0.2	0.8		208	67
342	44.4	0.2	0.9		203	68
343	44.5	0.3	1.2		199	67
344	44.5	0.3	1.4		196	68
345	44.5	0.4	1.7		192	68
346	44.5	0.4	1.7		188	69
347	44.5	0.4	1.9		185	68
348	44.5	0.4	2.1		182	68
349	44.5	0.5	2.3		178	68
350	44.6	0.5	2.4		175	68
351	44.4	0.5	2.6		172	68
352	44.6	0.6	2.7		169	68
353	44.5	0.6	2.8		167	68
354	44.6	0.5	2.7		164	68
355	44.6	0.5	2.8		161	68
356	44.6	0.5	2.8		159	68
357	44.6	0.5	2.8		157	68

358	44.5	0.5	2.8		154	68
359	44.6	0.5	2.8		152	68
360	44.6	0.5	2.7		150	68
361	44.5	0.5	2.7		148	68
362	44.6	0.5	2.7		146	68
363	44.7	0.5	2.7		144	68
364	44.6	0.5	2.8		142	68
365	44.6	0.5	2.9		140	68
366	44.7	0.5	2.7		138	68
367	44.7	0.5	2.7		137	68
368	44.5	1.1	6.0		161	68
369	44.4	0.4	2.6		183	67
370	44.3	0.5	2.5		166	68
371	44.3	0.4	2.3		155	67
372	44.2	0.4	2.1		149	67
373	44.3	0.3	2.0		143	67
374	44.4	0.3	1.9		140	67
375	44.1	0.3	1.7		137	67
376	44.3	0.2	1.6		135	67
377	44.3	0.2	1.5		133	67
378	44.4	0.2	1.6		131	67
379	44.3	0.3	2.6		151	67
380	44.2	0.3	2.0		178	67
381	44.0	0.7	2.8		195	67
382	43.9	1.1	4.6		209	67
383	43.6	1.3	5.6		220	67
384	43.3	1.7	6.8		230	67
385	43.0	1.6	7.7		239	67
386	42.8	1.5	8.3		247	67
387	42.6	1.6	9.1		254	67
388	42.2	1.4	9.9		262	67
389	41.8	1.3	10.5		270	67
390	41.4	1.1	11.5		281	67
391	40.9	0.6	12.6		291	67
392	40.7	0.3	13.2		303	67
393	40.2	0.2	14.0		313	67
394	40.0	0.2	14.2		318	67
395	39.3	0.2	14.1		320	67
396	38.9	0.2	13.4		323	67
397	38.2	0.1	15.8		329	67
398	37.7	0.0	16.3		339	67
399	37.1	0.1	16.2		346	67

400	36.5	0.1	15.9		350	67
401	35.8	0.1	16.3		352	67
402	35.3	0.1	17.5		359	69
403	34.9	0.0	17.1		364	67
404	34.2	0.0	16.7		367	67
405	33.7	0.0	16.6		369	67
406	33.0	0.0	16.3		371	67
407	32.4	0.0	15.8		372	67
408	32.0	0.0	15.4		372	67
409	31.4	0.0	15.3		372	67
410	30.9	0.1	15.1		373	67
411	30.5	0.1	15.0		374	67
412	29.9	0.1	14.8		373	68
413	29.4	0.1	14.7		374	68
414	28.8	0.1	14.6		374	68
415	28.3	0.1	14.4		374	68
416	28.0	0.1	14.3		374	68
417	27.5	0.1	14.1		374	68
418	27.2	0.1	12.7		352	68
419	26.9	0.3	15.9		322	69
420	26.6	0.3	15.4		304	68
421	26.4	1.3	17.5		290	68
422	26.3	0.6	15.9		278	68
423	26.1	0.3	13.6		268	68
424	26.0	0.2	11.5		259	68
425	25.8	0.1	10.3		252	68
426	25.9	0.2	8.8		245	68
427	25.8	0.3	7.5		239	68
428	25.8	0.3	6.2		233	68
429	25.9	0.4	5.1		228	68
430	25.8	0.4	4.0		225	68
431	25.9	0.2	2.4		222	68
432	25.8	0.3	2.0		219	68
433	25.7	0.4	2.0		214	68
434	25.8	0.5	2.2		210	68
435	25.7	0.6	2.5		206	68
436	25.6	0.7	2.8		202	68
437	25.7	0.8	3.0		198	68
438	25.7	0.9	3.3		195	68
439	25.8	0.9	3.5		191	68
440	25.8	1.0	3.6		187	67
441	25.6	1.1	4.1		183	67

442	25.8	1.1	4.1		181	67
443	25.6	1.1	4.2		178	67
444	25.7	1.0	4.0		175	67
445	25.8	1.1	4.2		172	67
446	25.8	1.1	4.3		169	67
447	25.8	1.1	4.1		166	67
448	25.8	1.0	4.1		163	67
449	25.9	1.1	4.2		161	67
450	25.9	1.0	4.0		158	67
451	25.8	1.0	3.9		156	67
452	25.8	1.0	4.0		154	67
453	25.9	1.0	4.0		152	67
454	25.8	0.9	3.8		149	67
455	25.8	0.9	3.8		147	67
456	26.0	0.9	3.8		145	67
457	25.9	0.9	3.9		143	67
458	25.9	0.9	3.6		141	67
459	25.9	0.9	3.7		139	67
460	25.9	0.9	3.8		154	67
461	25.7	0.5	2.9		181	67
462	25.6	0.5	2.4		171	67
463	25.6	0.4	2.0		159	67
464	25.5	0.4	1.9		151	67
465	25.7	0.3	1.9		146	67
466	25.6	0.3	1.8		142	67
467	25.5	0.3	1.7		139	67
468	25.6	0.3	1.7		137	67
469	25.7	0.3	1.8		134	67
470	25.6	0.2	1.7		132	67
471	25.8	0.2	1.6		130	67
472	25.6	0.2	1.6		128	67
473	25.6	0.2	1.7		127	67
474	25.6	0.3	3.0		158	67
475	25.5	0.5	2.1		181	67
476	25.2	0.8	2.7		196	67
477	25.2	0.9	3.7		207	67
478	25.0	1.2	5.0		217	67
479	24.9	1.4	6.4		227	67
480	24.6	1.3	7.4		235	67
481	24.4	1.3	8.2		244	67
482	24.1	1.2	9.6		253	67
483	23.7	1.2	10.2		262	67

484	23.5	1.2	10.7		271	67
485	23.3	1.2	10.9		278	67
486	23.2	1.2	11.0		284	67
487	22.5	1.3	11.3		291	67
488	22.4	0.8	12.9		299	68
489	21.9	0.9	12.6		306	68
490	21.5	0.8	12.5		312	68
491	21.3	0.9	12.4		316	68
492	21.0	1.1	12.2		318	68
493	20.6	0.8	12.3		321	68
494	20.1	0.9	12.1		323	68
495	19.9	1.1	12.0		325	68
496	19.3	1.1	12.1		327	68
497	19.3	1.3	11.8		328	68
498	18.9	1.2	12.0		330	68
499	18.5	1.0	12.4		333	68
500	18.0	1.1	12.2		335	68
501	17.7	1.3	11.8		335	68
502	17.3	1.4	11.4		334	68
503	17.0	1.8	11.0		333	68
504	16.6	2.0	10.8		332	67
505	16.4	1.7	10.9		331	67
506	15.9	1.7	10.7		330	67
507	15.6	1.7	10.5		329	67
508	15.3	1.5	10.3		329	67
509	14.9	1.4	10.3		328	67
510	14.5	1.7	10.6		328	67
511	14.3	1.7	10.3		327	67
512	13.9	1.6	10.1		327	67
513	13.7	1.2	10.1		328	67
514	13.3	1.0	10.2		329	67
515	13.0	0.9	10.2		330	67
516	12.8	0.9	10.2		331	67
517	12.3	0.9	10.0		330	67
518	12.0	0.9	9.8		330	67
519	11.9	0.9	9.6		330	67
520	11.4	1.0	9.5		329	67
521	11.2	1.1	9.6		328	67
522	10.9	1.2	9.4		328	67
523	10.5	1.2	9.4		328	67
524	10.4	0.7	6.8		305	67
525	10.4	0.3	6.3		283	67

526	10.3	0.3	5.8		271	67
527	10.3	0.2	7.6		261	67
528	10.2	0.2	7.0		252	67
529	10.1	0.3	6.2		244	67
530	10.0	0.3	5.5		237	67
531	10.2	0.4	5.1		231	67
532	10.0	0.4	4.6		226	67
533	9.9	0.4	4.1		221	67
534	10.2	0.5	3.5		216	67
535	9.8	0.5	3.1		212	67
536	10.2	0.4	2.3		208	67
537	10.0	0.3	1.7		204	67
538	9.9	0.2	1.2		201	67
539	9.9	0.2	1.3		197	66
540	10.0	0.3	1.3		193	67
541	10.1	0.3	1.6		189	67
542	9.8	0.4	1.8		186	66
543	10.0	0.4	1.9		182	66
544	9.9	0.4	2.1		179	67
545	10.1	0.5	2.2		176	67
546	10.0	0.4	2.2		173	67
547	10.0	0.5	2.4		170	67
548	10.0	0.5	2.5		167	67
549	10.1	0.5	2.4		164	68
550	10.0	0.5	2.4		161	68
551	10.1	0.5	2.5		159	68
552	10.1	0.5	2.4		156	68
553	10.0	0.5	2.4		154	68
554	10.0	0.5	2.3		152	68
555	10.1	0.5	2.4		150	68
556	10.2	0.4	2.2		147	68
557	10.0	0.4	2.2		145	68
558	10.2	0.4	2.2		143	67
559	10.1	0.4	2.1		142	67
560	10.1	0.4	2.1		140	67
561	10.1	0.4	2.1		138	67
562	10.2	0.4	2.0		136	67
563	10.1	0.4	2.0		134	67
564	10.1	0.4	1.8		132	67
565	10.1	0.4	1.9		131	67
566	10.1	1.3	5.2		154	67
567	10.0	0.2	1.4		173	67

568	10.0	0.1	1.0		158	67
569	10.0	0.1	0.8		148	67
570	10.0	0.1	0.8		142	67
571	10.1	0.1	0.7		137	67
572	10.1	0.1	0.8		134	67
573	10.2	0.1	0.8		131	67
574	10.1	0.3	2.7		159	67
575	10.0	0.4	1.7		179	67
576	9.9	0.7	2.4		191	67
577	9.8	0.8	3.2		200	67
578	9.6	0.9	4.7		208	67
579	9.6	1.1	5.6		215	67
580	9.4	1.2	6.1		220	67
581	9.2	1.3	6.6		225	68
582	9.0	1.4	6.8		229	68
583	8.8	1.5	6.9		233	68
584	8.7	1.5	7.1		238	68
585	8.4	1.4	7.3		241	68
586	8.2	1.4	7.3		244	68
587	8.2	1.4	7.7		248	68
588	8.0	1.5	7.9		251	68
589	7.8	1.4	8.0		254	68
590	7.5	1.3	8.5		260	68
591	7.1	0.8	12.1		273	68
592	6.9	1.2	11.4		281	68
593	6.5	1.2	11.3		287	68
594	6.3	1.3	11.2		291	68
595	6.1	1.1	11.1		295	68
596	5.6	1.1	11.0		297	68
597	5.4	1.0	11.0		300	68
598	5.1	1.0	10.9		301	68
599	4.8	1.0	10.9		302	69
600	4.5	1.1	10.9		304	68
601	4.1	1.0	11.3		307	69
602	4.0	0.9	11.4		309	69
603	3.6	1.0	11.2		312	69
604	3.4	1.1	10.9		313	68
605	3.1	1.0	11.0		314	68
606	2.6	1.0	11.1		317	69
607	2.3	1.1	10.8		318	68
608	2.1	1.2	10.7		318	68
609	1.7	1.2	10.5		318	68

610	1.7	1.1	10.3		318	68
611	1.2	1.3	10.1		316	68
612	1.1	1.3	9.7		315	68
613	0.8	1.3	9.7		315	68
614	0.6	1.4	9.9		315	68
615	0.0	1.1	10.9		319	68

OMNI-Test Laboratories, Inc.

ASTM E2618 Wood Heater Run Sheets

Client: Central Boiler Project Number: 0117WB040E Run Number: 6
Model: Edge 360 Tracking Number: 2399 Date: 12/29/19
Test Crew: B Davis
OMNI Equipment ID numbers:

Wood Heater Supplemental Data

Start Time: 12:12 Booth #: E3
Stop Time: 615 min

Stack Gas Leak Check:
Initial: good Final: good

Sample Train Leak Check:
A: 0.0 @ 7 "Hg
B: 0.0 @ 8 "Hg

Calibrations: Span Gas CO_2: 17.06 CO: 4.29

	Pre Test		Post Test	
	Zero	Span	Zero	Span
Time	1205	1205	2230	2230
CO_2	-0.00 ~~16.98~~	16.98	0.06	17.00
CO	-0.00	4.24	0.00	4.26

Air Velocity (ft/min): Initial: 250 Final: 250
Scale Audit (lbs): Initial: 10.0 Final: 10.0
Pitot Tube Leak Test: Initial: good Final: good
Stack Diameter (in): 6"
Induced Draft: 0.0
% Smoke Capture: 100%
Flue Pipe Cleaned Prior to First Test in Series:
Date: 12/6/19 Initials: AS

	Initial	Middle	Ending
P_b (in/Hg)	29.83		29.80
RH (%)	46		48
Ambient (°F)	69		68

Tunnel Traverse

Microtector Reading	dP (in H_2O)	T(°F)
1	.010	69
2	.012	69
3	.012	69
4	.014	69
5	.014	69
6	.012	69
1	.010	69
2	.014	69
3	.016	69
4	.015	69
5	.014	69
6	.012	69
Center:		
	.014	

Background Filter Volume: 166.262

Tunnel Static Pressure (in H_2O):	
Beginning of Test	End of Test
-.180	-.180

Technician Signature: [signature] Date: 1/9/20

OMNI-Test Laboratories, Inc.

ASTM E2618 Wood Heater Run Sheets

Client: Central Boiler Project Number: 0117WB040E Run Number: 6
Model: Edge 360 Tracking Number: 2399 Date: 12/20/19
Test Crew: B Davis
OMNI Equipment ID numbers:

Wood Heater Run Notes

Air Control Settings

Primary:

BTU Target ≈ 66,000 BTU
Demand cycle Temp 165-185°F

Secondary: fixed

Tertiary/Pilot: N/A

Fan: Automatic

Preburn Notes

Time	Notes
Ø	loaded 5 loads at Approx 30 lbs each, burn @ ≈ 160,000 BTU until 26 lbs left on scale. Set BTU to ≈ 66,000 and started 1 hr Preburn. Tared 205 lbs and started test

Test Notes

Sketch test fuel configuration:

See photo

Start up procedures & Timeline:

Bypass: N/A
Fuel loaded by: 90 seconds
Door closed at: 90 seconds
Primary air: Automatic

Notes: ≈ 66,000 BTU draw, demand cycle @ 165-185°F

Time	Notes
60	changed front filter in train A.

Technician Signature: Date:

Section 5

Testing Results

Table 1A - Data Summary Part A

						θ	W_{fuel}	MC_{ave}	Q_{inLHV}	Q_{inHHV}	Q_{out}
Category	Run No	Load % Capacity	Target Load	Actual Load	Actual Load	Test Duration	Wood Weight as-fired	Wood Moisture	Heat Input (LHV)	Heat Input (HHV)	Heat Output
			Btu/hr	Btu/hr	% of max	hrs	lb	% DB	Btu	Btu	Btu
I	4	< 15% of max	<22293	20293	13.7%	34.18	119.8	22.30	782488	842438	693687
II	3	16-24% of max	23780-35670	34477	23.2%	20.63	123	22.19	804066	865669	711374
II	5	16-24% of max	23780-35670	35614	24.0%	19.92	120.8	21.95	791240	851860	709314
III	6	25-50% of max	37156-74312	67254	45.3%	10.25	120.5	22.28	787161	847470	689351
IV	1	Max capacity	N/A	148625	100.0%	4.72	119.7	21.99	783787	843837	701013

Table 1B - Data Summary Part B

			T2 Min	E_T	E	E	$E_{g/hr}$	$E_{g/kg}$	η_{del}	η_{SLM}
Category	Run No	Load % Capacity	Min Return Water Temp.	Total PM Emissions	PM Output Based	PM Output Based	PM Rate	PM Factor	Delivered Efficiency (HHV)	Stack Loss Efficiency (HHV)
			°F	g	lb/MMBtu Out	g/MJ	g/hr	g/kg	%	%
I	4	< 15% of max	156.4	38.9	0.12	0.05	1.1	0.9	82.3	74.6
II	3	16-24% of max	155.3	39.3	0.12	0.05	1.9	0.9	82.2	75.9
II	5	16-24% of max	156.2	43.7	0.14	0.06	2.2	1.0	82.6	78.7
III	6	25-50% of max	146.6	31.3	0.10	0.04	3.1	0.7	81.3	78.0
IV	1	Max capacity	133.5	27.2	0.09	0.04	5.8	0.6	83.1	76.3

Table 2 - Year-Round Use Weighting

Category	Weighting Factor (F_i)	$\eta_{del,i}$ x F_i	$E_{g/MJ,i}$ x F_i	$E_{g/kg,i}$ x F_i	$E_{lb/MMBtu\ Out,i}$ x F_i	$E_{g/hr,i}$ x F_i	CO/hr,i x Fi
I	0.437	36.0	0.02	0.38	0.05	0.50	0.76
II	0.119	9.8	0.01	0.10	0.01	0.23	0.35
II	0.119	9.9	0.01	0.12	0.02	0.26	0.39
III	0.275	22.4	0.01	0.19	0.03	0.84	1.28
IV	0.05	4.2	0.00	0.03	0.00	0.29	0.46
Totals	1	82.2	0.05	0.8	0.12	2.1	3.2

Table 1C - Hang Tag Information

MANUFACTURER:	Central Boiler		
MODEL NUMBER:	Edge 360		
MAXIMUM OUTPUT RATING	Q_{MAX}	148625	Btu/hr
ANNUAL EFFICIENCY RATING:	ηavg	82.2%	**(Using higher heating value)**
		88.4%	(Using lower heating value)
PARTICLE EMISSIONS:	E_{avg}	2.1	GRAMS/HR (average)
		0.12	LBS/MILLION Btu OUTPUT
CARBON MONOXIDE	CO	4.35	Grams/Minute (average)

Higher Heating Value Weighted Results

Manufacturer: Central Boiler
Model: Edge 360
Tracking No.: 2399
Project No.: 0117WB040E
Technician: B. Davis
Comments: Weighting factors for tests 3 and 5 were divided by 2 prior to averaging

Adjustable Parameters:	Category I	Category II	Category II	Category III	Category IV
Run Number:	4	3	5	6	1
Test Date:	12/16/19	12/11/19	12/18/19	12/20/19	12/9/19
Total Fuel Weight (lb):	119.8	123.0	120.8	120.5	119.7
Average Moisture of Fuel (% dry):	22.3	22.2	22.0	22.3	22.0
Average Temperature of Appliance Water at Start of Test:	164.9	168.3	167.3	160.4	152.8
Average Temperature of Appliance Water at End of Test:	162.5	180.2	177.9	169.0	152.5
Average Thermopile Reading:	110.3	114.8	113.4	115.9	103.8
Average Load Side Liquid Flow Rate (gal/min):	0.4	0.6	0.6	1.1	2.9
Time Interval (min):	2051	1238	1195	615	283
Burn Rate (kg/hr):	1.30	2.21	2.26	4.36	9.44
Emissions (g):	38.9	39.3	43.7	31.3	27.2

Constant Parameters:

Fuel Heating Value: 8600 Btu/lb Higher Heating Value

Heating Season Weighting

Category I Weighting Factor: 0.175
Category II Weighting Factor: 0.275
Category III Weighting Factor: 0.450
Category IV Weighting Factor: 0.100

Year Round Use Weighting

Category I Weighting Factor: 0.437
Category II Weighting Factor: 0.238
Category III Weighting Factor: 0.275
Category IV Weighting Factor: 0.050

Calculations:	Category I	Category II	Category II	Category III	Category IV	Totals
Heat Input (Btu):	842438	865669	851860	847470	843837	
Heat Input Rate (Btu/hr):	24645	41955	42771	82680	178905	
Appliance Water Specific Heat (Btu/lb°F):	1.001	1.001	1.001	1.001	1.001	
Heat Output (Btu):	693687	711374	709314	689351	701013	
Heat Output Rate (Btu/hr):	20293	34477	35614	67254	148625	
Total Particulate Emissions (g):	38.9	39.3	43.7	31.3	27.2	
Heating Season Weighting:	0.153	0.118	0.134	0.315	0.061	0.8
Year Round Use Weighting:	0.383	0.102	0.116	0.193	0.031	0.8
Total Particulate Emissions Rate (g/MJ):	0.05	0.05	0.06	0.04	0.04	
Heating Season Weighting:	0.009	0.007	0.008	0.019	0.004	0.05
Year Round Use Weighting:	0.023	0.006	0.007	0.012	0.002	0.05
Total Particulate Emissions Rate (lbs/mmbtu input):	0.10	0.10	0.11	0.08	0.07	
Heating Season Weighting:	0.018	0.014	0.016	0.037	0.007	0.09
Year Round Use Weighting:	0.044	0.012	0.013	0.022	0.004	0.10
Total Particulate Emissions Rate (lbs/mmbtu output):	0.124	0.122	0.136	0.100	0.085	
Heating Season Weighting:	0.022	0.017	0.019	0.045	0.009	0.11
Year Round Use Weighting:	0.054	0.015	0.016	0.028	0.004	0.12
Total Particulate Emissions Rate (g/hr 10,000BTU):	0.02	0.03	0.03	0.04	0.08	
Heating Season Weighting:	0.003	0.004	0.004	0.020	0.008	0.04
Year Round Use Weighting:	0.007	0.003	0.004	0.012	0.004	0.03
Emissions (g/hr):	1.1	1.9	2.2	3.1	5.8	
Heating Season Weighting:	0.20	0.26	0.30	1.37	0.58	2.7
Year Round Use Weighting:	0.50	0.23	0.26	0.84	0.29	2.1
Efficiency (%):	82.3	82.2	83.3	81.3	83.1	
Heating Season Weighting:	14.4	11.3	11.4	36.6	8.3	82.1
Year Round Use Weighting:	36.0	9.8	9.9	22.4	4.2	82.2
First Hour Emissions (g/hr):	-0.6	0.4	0.0	0.0	2.8	
Target Load High:	22294	35670	35670	74312	148625	
Target Load Low:	NA	23780	23780	37156	NA	

Weighted Emissions

Heating Season Use:	0.09 lbs/mmbtu input	**8 Hr Burn Load**		**8 Hr Efficiency Rating**	
Year Round Use:	0.10 lbs/mmbtu input	X1 =	67254	X1 =	81.3
		Y1 =	10.3	Y1 =	10.3
Heating Season Use:	0.11 lbs/mmbtu output	X2 =	148625	X2 =	83.1
Year Round Use:	0.12 lbs/mmbtu output	Y2 =	4.7	Y2 =	4.7

Weighted Efficiency

		8 Hr Burn Load =	100341	Btu/hr
Heating Season Use:	82.1 %			
Year Round Use:	82.2 %	8 Hr Efficiency =	82.0	%

TEST RESULTS AND DISCUSSION

Results

A total of six test runs were performed on the Classic Edge 360 boiler. Six test runs were conducted in the following categories based on the manufacturer's rated heat capacity: one in the 15% or less of maximum capacity (category I); three in the 16-24% of capacity (category II); one in the 25-50% of capacity (category III); and one at the manufacturer's rated heat capacity (category IV).

The Classic Edge 360 furnace meets the 2020 particulate matter emission limit of a weighted average 0.15 lbs/mmBtu heat output when tested with Oak cord wood.

Emissions (lb/mmbtu output)	
Heating Season	0.11
Year-Round Use	0.12

The average Btu/hr for 8-hour burn time was measured to be **100,341 Btu/hr**. The average efficiency for 8-hour burn time was measured to be **82.0%**.

Precision

The precision and accuracy of the emissions and heating efficiency results presented in this report cannot be specified because of the unmeasured variability of results that would occur between identical appliances and fueling protocols. It is estimated, using precision data from similar sampling and measurement methods, that the precision of the results presented in this report are +/- 10 to 12 percentage points of the emissions values and +/- 3 to 4 percentage points of thermal efficiency.

One-Hour Filter Discussion

§ 60.5476(c)(6) of 40 CFR 60 states, "For all tests conducted using ASTM 2515–11 [sic]… the manufacturer and approved test laboratory must also measure the first hour of particulate matter emissions for each test run using a separate filter in one of the two parallel trains. The manufacturer and approved test laboratory must report the test results for the first hour separately and also include them in the total particulate matter emissions per run.

Section 6

Example Calculations

Equations and Sample Calculations – Wood-fired Hydronic Heater

Manufacturer:	Central Boiler
Model:	Edge 360
Run:	4
Category:	I

Equations used to calculate the parameters listed below are described in this appendix. Sample calculations are provided for each equation. The raw data and printout results from a sample run are also provided for comparison to the sample calculations.

BR	Dry burn rate, kg/hr
m_n	Total particulate matter collected, mg
$V_{m(std)}$	Volume of gas sampled corrected to standard conditions, dscf
v_s	Average dilution tunnel gas velocity, ft/sec
C_s	Particulate concentration, g/dscf
Q_{sd}	Dilution tunnel gas flow rate, dscf/min
E	Particulate emission rate, lbs/hr
E_T	Total particulate emissions, grams
MC_{avg}	Average fuel load moisture content, %
PR	Proportional rate variation, %
Q_{in}	Heat input, Btu
Q_{out}	Heat output, Btu
	Heat output rate, Btu/hr
$E_{g/MJ}$	Emission rate, g/MJ
$E_{lb/MMBtu\ input}$	Emission rate, lb/MMBtu input
$E_{lb/MMBtu\ output}$	Emission rate, lb/MMBtu output
$E_{g/kg}$	Emission rate, g/kg
$E_{g/hr}$	Emission rate, g/hr
$E_{g/hr\ 10,000\ BTU}$	Emission rate, g/hr 10,000 Btu
η_{del}	Delivered efficiency, %
E_{avg}, η_{avg}	Weighted average emissions and efficiency, g/kg, %
	Average Btu/hr for 8 hour burn time, Btu/hr

BR – Dry Burn Rate, kg/hr
Using EPA Method 28 equation 28-3:

$$BR = \frac{60 \times W_{wd}}{\theta} \times \frac{100 - \%M_w}{100}$$

Where,

BR	=	Dry burn rate, kg/hr
W_{wd}	=	Mass of wood burned (wet basis) during test run, lb
θ	=	Total time of test run, minutes
$\%M_w$	=	Average moisture content of test fuel charge, wet basis percent

Sample Calculation:

Using the equation 28-2 for converting dry basis moisture to wet basis moisture,

$$\%M_w = \frac{\%M_D \times 100}{\%M_D + 100}$$

$$\%M_W = \frac{\underline{22.30} \times 100}{\underline{22.30} + 100}$$

$$\%M_W = \underline{18.23}\ \%$$

W_{wd} = <u>119.8</u> lbs

W_{wd} = <u>119.8</u> x 0.4536 kg/lb

W_{wd} = <u>54.3</u> kg

$$BR = \frac{60 \times \underline{54.3}}{\underline{2051}} \times \frac{100 - \underline{18.23}}{100}$$

BR = <u>1.30</u> kg/hr

m_n – Total Particulate Matter Collected, mg
ASTM E2515 Equation (12)

$$m_n = m_p + m_f + m_g$$

Where:

m_n = Total particulate matter collected, mg
m_p = Particulate matter from probe, mg
m_f = Particulate matter from filters, mg
m_g = Particulate matter from filter seals, mg

Sample Calculation:

Using equation for Train 1 (first-hour):

m_n = 0.0 + -0.3 + 0.0

m_n = -0.3 mg

Using equation for Train 1(Post First Hour Change-out):

m_n = 1.4 + 14.9 + 2.6

m_n = 18.9 mg

Train 1 Aggregate:

m_n = -0.3 + 18.9
m_n = 18.6 mg

Using equation for Train 2:

m_n = 1.2 + 14.4 + 2.4

m_n = 18.0 mg

$V_{m(std)}$ – Volume of Gas Sampled Corrected to Dry Standard Conditions, dscf
ASTM E2515 equation (6)

$$V_{m(std)} = V_m \times Y \times K_1 \times \frac{(P_b + \frac{\Delta H}{13.6})}{T_m}$$

Where:

K_1	=	17.64 °R/in. Hg
V_m	=	Volume of gas sample measured at the dry gas meter, dcf
Y	=	Dry gas meter calibration factor, dimensionless
P_b	=	Barometric pressure at the testing site, in. Hg
ΔH	=	Average pressure differential across the orifice meter, in. H_2O
T_m	=	Absolute average dry gas meter temperature, °R

Sample Calculation:

Using equation for Train 1:

$$V_{m(std)} = \frac{327.67 \times 1.009 \times 17.64 \times \left(30.12 + \frac{1.33}{13.6}\right)}{(76.5 + 460)}$$

$V_{m(std)}$ = 328.48 ft3

Using equation for Train 2:

$$V_{m(std)} = \frac{329.68 \times 0.990 \times 17.64 \times \left(30.12 + \frac{1.06}{13.6}\right)}{(76.07 + 460)}$$

$V_{m(std)}$ = 324.32 ft3

Using equation for ambient train:

$$V_{m(std)} = \frac{489.42 \times 0.988 \times 17.64 \times \left(30.12 + \frac{0.24}{13.6}\right)}{(64.37 + 460)}$$

$V_{m(std)}$ = 490.25 ft3

Using equation for First Hour Train:

$$V_{m(std)} = \frac{9.466 \times 1.009 \times 17.64 \times \left(30.33 + \frac{1.32}{13.6}\right)}{(70 + 460)}$$

$V_{m(std)}$ = 9.664 ft3

v_s – Dilution Tunnel Gas Velocity, ft/sec
ASTM E2515 equation (7)

$$v_s = F_P \times k_p \times C_p \times (\sqrt{\Delta P})_{avg} \times \sqrt{\frac{T_{s(avg)}}{P_s \times M_s}}$$

Where:

F_p	=	Adjustment factor for center of tunnel pitot tube placement, Fp = $\frac{V_{strav}}{V_{scent}}$, ASTM E2515 Equation (1)
v_{scent}	=	Dilution tunnel velocity calculated after the multi-point pitot traverse at the center, ft/sec
v_{strav}	=	Dilution tunnel velocity calculated after the multi-point pitot traverse, ft/sec
k_p	=	Pitot tube constant, $85.49 \frac{ft}{sec}\left[\frac{(lb/lb-mole)\times(inches Hg)}{(R)\times(inches H_2O)}\right]^{1/2}$
C_p	=	Pitot tube coefficient: 0.99, unitless
ΔP*	=	Velocity pressure in the dilution tunnel, in H_2O
T_s	=	Absolute average gas temperature in the dilution tunnel, °R; (°R = °F + 460)
P_s	=	Absolute average gas static pressure in diltuion tunnel, = $P_{bar} + P_g$, in Hg
P_{bar}	=	Barometric pressure at test site, in. Hg
P_g	=	Static pressure of tunnel, in. H_20; (in Hg = in H_20/13.6)
M_s	=	**The dilution tunnel wet molecular weight; M_s = 28.78 assuming a dry weight of 29 lb/lb-mole

Sample calculation:

$$M_s = 29 \times (1 - 0.02) + 18.0 \times 0.02 = 28.78$$

$$V_s = \underline{0.939} \times 85.49 \times \underline{0.99} \times \underline{0.118} \times \left(\frac{\underline{71.963} + 460}{\left(\underline{30.12} + \frac{\underline{-0.18}}{13.6}\right) \times 28.78} \right)^{1/2}$$

V_s = <u>7.37</u> ft/s

*The ASTM test standard mistakenly has the square root of the average delta p instead of the average of the square root of delta p. The current EPA Method 2 is also incorrect. This was verified by Mike Toney at EPA.

**The ASTM test standard mistakenly identifies Ms as the dry molecular weight. It should be the wet molecular weight as indicated in EPA Method 2.

C_s – Particulate Concentration, g/dscf
ASTM E2515 equation (13)

$$C_s = K_2 \times \frac{m_n}{V_{m(std)}}$$

Where:

K_2	=	Constant, 0.001 g/mg
C_s	=	Concentration of particulate matter in stack gas, dry basis, corrected to standard conditions, g/dscf
m_n	=	Total mass of particulate matter collected in the sampling train, mg
$V_{m(std)}$	=	Volume of gas sampled corrected to dry standard conditions, dscf

Sample calculation:

For Train 1:

$$C_s = 0.001 \times \frac{18.6}{328.48}$$

C_s = 0.000057 g/dscf

For Train 2

$$C_s = 0.001 \times \frac{18.0}{324.32}$$

C_s = 0.000056 g/dscf

For Ambient Train

$$C_s = 0.001 \times \frac{0.1}{490.25}$$

C_s = 0.000000 g/dscf

For First Hour Train:

$$C_s = 0.001 \times \frac{-0.3}{9.66}$$

C_s = -0.000031 g/dscf

Q_{sd} – Average Dilution Tunnel Gas Flow Rate, dscf/hr
ASTM equation (3)

$$Q_{sd} = 3600 \times (1 - B_{ws}) \times v_s \times A \times \frac{T_{std}}{T_{s(avg)}} \times \frac{P_s}{P_{std}}$$

Where:

Q_{sd}	=	Gas flow rate corrected to dry, standard conditions, dscf/hr
3600	=	Conversion from seconds to hours (ASTM method uses 60 to convert in minutes)
B_{ws}	=	Moisture content of dilution tunnel gas, ratio; assume 2%
v_s	=	Average dilution tunnel gas velocity, ft/sec
A	=	Cross sectional area of dilution tunnel, ft^2
T_{std}	=	Standard absolute temperature, 528 °R
$T_{s(avg)}$	=	Average absolute dilution tunnel temperature, °R, (°R = °F + 460)
P_b	=	Barometric pressure at test site, in. Hg
P_g	=	Dilution tunnel static pressure, in. Hg
P_s	=	Absolute dilution tunnel gas pressure, in Hg, (Hg = $P_b + P_g$)
P_{std}	=	Standard absolute pressure, 29.92 in Hg

Sample calculation:

$$Q_{sd} = 3600 \times (1 - 0.02) \times \underline{7.37} \times \underline{0.785} \times \frac{528}{\underline{71.96} + 460} \times \frac{\underline{30.12} + \frac{\underline{-0.18}}{13.6}}{29.92}$$

Q_{sd} = <u>20372.73</u> dscf/hr

E, E_T – Particulate Emissions
ASTM E2515 equation (15) section

$$E_T = (c_s - c_r) \times Q_{std} \times \theta$$

Where:

E_T	=	Particulate emissions, g
C_s	=	Concentration of particulate matter in the stack, g/dscf
C_r	=	Concentration of ambient particulate matter, g/dscf
Q_{std}	=	Average dilution tunnel gas flow rate, dscf/hr
θ	=	Total time of test run, minutes

Sample calculation:

For Train 1

E_T = (0.000057 - 0.000000) x 20372.73 x 2051 /60

E_T = 39.29 g

For Train 2

E_T = (0.000056 - 0.000000) x 20372.7 x 2051 /60

E_T = 38.51 g

Average

E = 38.90 g

For First Hour Train

E_T = (-0.000031 - 0.000000) x 20372.73 x 60 /60

E_T = -0.64 g

Total emission values shall not differ by more than 7.5% from the total average emissions

7.5% of the average =	2.92
Train 1 difference =	0.39
Train 2 difference =	0.39

MC_{avg} – Average Fuel Load Moisture Content, %
Test Method 28 WHH section 13.3

$$MC_{avg} = \left[\left[\sum W_i \times MC_i\right] + \left[W_{sp} \times MC_{sp}\right]\right] \div W_{fuel}$$

Where:

W_i	=	Weight of individual fuel pieces, lbs
MC_i	=	Average moisture of individual fuel pieces, % dry

Sample calculation:

MC_{avg} = (10.0 x 24.0 + 10.4 x 22.7 + 11.0 x 21.2 +
10.3 x 20.8 + 7.0 x 22.1 + 7.1 x 21.7 +
10.4 x 23.0 + 10.3 x 23.1 + 10.0 x 23.4 +
. . . + (119.8 - 119.8) x 10) / 119.8

MC_{avg} = 22.30 %

PR - Proportional Rate Variation
ASTM E2515 equation (16)

$$PR = \left[\frac{\theta \times V_{mi} \times V_s \times T_m \times T_{si}}{\theta_i \times V_m \times V_{si} \times T_{mi} \times T_s} \right] \times 100$$

Where:

θ = Time of test, min

θ_i = Time of interval, 1 min

V_{mi} = Volume of gas sample measured by the dry gas meter during the "ith" time interval, dscf

V_m = Volume of gas sample as measured by dry gas meter, dscf

V_{si} = Average gas velocity in the dilution tunnel during the "ith" time interval, m/sec

V_s = Average gas velocity in the dilution tunnel, m/sec

T_{mi} = Average dry gas meter temperature during the "ith" time interval, °R

T_m = Average dry gas meter temperature, °R

T_{si} = Average gas temperature in the dilution tunnel during the "ith" time interval, °R

T_s = Average gas temperature in the dilution tunnel, °R

Sample calculation (for the first 10 minute interval of Train 1):

$$PR = \left(\frac{2051 \times 0.151 \times 7.365 \times (76.5 + 460) \times (82.0 + 460)}{1 \times 327.7 \times 7.947 \times (66.00 + 460) \times (72.0 + 460)} \right) \times 100$$

PR = 91.04 %

Q_{in} – Heat Input, Btu
Test Method 28 WHH section 13.4

$$Q_{in} = (W_{fuel} / (1 + (MC / 100))) \times HV$$

Where:

W_{fuel} = Fuel charge weight, lbs

MC = Moisture content, %

HHV = Higher heating value, 8600 Btu/lb

LHV = Lower heating value, 7988 Btu/lb

Sample calculation:

For the Higher heating value

Q_{in} = (119.8 / (1 + (22.3 /100))) x 8600

Q_{in} = 842438 Btu

For the Lower heating value

Q_{in} = (119.8 / (1 + (22.3 /100))) x 7988

Q_{in} = 782488 Btu

Q_{out} – Heat Output, Btu
Test Method 28 WHH section 13.5.1

$$Q_{out} = \left|\sum(C_p \times \Delta T \times M \times t)\right| + (W_{app} \times C_{steel} + C_P \times W_{water}) \times (TF_{avg} - TI_{avg})$$

$$M = V_f \times \sigma$$

$$\sigma = (62.56 + (-0.0003413 \times T_{3i}) + (-0.00006225 \times T_{3i}^2)) \times 0.1337$$

$$C_P = 1.0014 + (-0.000003485 \times T_{3i})$$

Where:

C_p	=	*Heat capacity of water, Btu/lb-°F
C_{steel}	=	Heat capacity of steel, 0.1 Btu/lb-°F
ΔT	=	Load Side thermopile reading, °F
M	=	Mass flow rate of water, lb/min
t	=	Elapsed time, 1 min
W_{app}	=	Weight of appliance, lbs
W_{water}	=	Weight of water, lbs
TF_{avg}	=	Final average temperature of appliance and water, °F
TI_{avg}	=	Initial average temperature of appliance and water, °F
T_{avg}	=	Average temperature of water in the load side, °F
T_{3i}	=	Load inlet temperature at interval i, °F
V_f	=	Volumetric flow rate of water, gal/min
σ	=	Density of water, lb/gal

Sample calculation, For the first 1 minute period: :

C_p = 1.0014 + (-0.000003485 x 59.92)

C_p = 1.001 Btu/lb°F

σ = (62.56+(-0.0003413 x 59.92) + (-0.00006225 x 59.9 ^{2})) x 0.1337

σ = 8.33

M = 0.37 x 8.33

M = 3.11 lbs/min

C_p x ΔT x M x t = 1.001 x 105.8 x 3.11 x 1

C_p x ΔT x M x t = 329 Btu

Total Sum for Run 1:

$\left|\sum(C_p \times \Delta T \times M \times t)\right|$ = 697496 Btu

Q_{out} for Run 1:

Q_{out} = 697496 + (1460 x 0.1 + 1.001 x 1456) x (162.50 - 164.87)

Q_{out} = 693687 Btu

Heat Output Rate, Btu/hr
Test Method 28 WHH section 13.5.2

$$Heat\ \ output\ \ rate\ = Q_{out}\ /\ test\ \ duration$$

Sample calculation:

Heat output rate = 693686.6 / (2051 / 60)

Heat output rate = 20293 Btu/hr

Emission Rates, g/MJ, lb/MMBTU, g/kg, g/hr
Test Method 28 WHH section 13.5.3

$$E_{g/MJ} = E_T / (Q_{out} \times 0.001055)$$

$$E_{lb/MMBtu\ input} = (E_T / 453.59) / (Q_{input} \times 10^{-6})$$

$$E_{lb/MMBtu\ output} = (E_T / 453.59) / (Q_{output} \times 10^{-6})$$

$$E_{g/kg} = E_T / (W_{fuel} / (1 + MC / 100))$$

$$E_{g/hr} = E_T / Test\ Duration$$

$$E_{g/hr\ 10{,}000Btu} = \frac{E_T}{(Test\ Duration \times (Q_{out} / 10{,}000))}$$

Sample calculation:

$E_{g/MJ}$ = 38.90 / (693687 x 0.001055)
$E_{g/MJ}$ = 0.0532 g/MJ

Using higher heat value

$E_{lb/MMBtu\ input}$ = (38.90 / 453.59)/(842438 x 10^{-6})
$E_{lb/MMBtu\ input}$ = 0.102 lb/MMBtu input

Using lower heat value

$E_{lb/MMBtu\ input}$ = (38.90 / 453.59)/(782488 x 10^{-6})
$E_{lb/MMBtu\ input}$ = 0.110 lb/MMBtu input

$E_{lb/MMBtu\ output}$ = (38.90 / 453.59)/(693687 x 10^{-6})
$E_{lb/MMBtu\ output}$ = 0.124 lb/MMBtu output

$E_{g/kg}$ = 38.90 /((119.8 x 0.4536) / (1 + 22.3 /100))
$E_{g/kg}$ = 0.875 g/kg

$E_{g/hr}$ = 38.90 / (2051 / 60)
$E_{g/hr}$ = 1.14 g/hr

$E_{g/hr\ 10{,}000\ Btu}$ = 38.90 / ((2051 / 60) x (693687 /10,000))

$E_{g/hr\ 10{,}000\ Btu}$ = 0.02 g/hr 10,000 Btu

First hour emissions:

$E_{g/kg}$ = -0.64 /((9.15171 x 0.4536) / (1 + 22.3 /100))
$E_{g/kg}$ = -0.188 g/kg

$E_{g/hr}$ = -0.64 / (60 / 60)

η_{del} – Delivered Efficiency, %
Test Method 28 WHH section 13.5.4

$$\eta_{del} = (Q_{out} / Q_{in}) \times 100$$

$$\eta_{delLHV} = (Q_{out} / Q_{inLHV}) \times 100$$

Sample calculation:

η_{del} = (693687 / 842438) x 100

η_{del} = 82.34 %

η_{delLHV} = (693687 / 782488) x 100

η_{delLHV} = 88.65 %

E_{avg}, η_{avg} – Weighted Average Emissions and Efficiency, g/kg, %
Test Method 28 WHH section 13.6.1

$$E_{avg} = \sum E_i \times F_i$$

$$\eta_{avg} = \sum \eta_i \times F_i$$

Sample calculation for emissions (g/kg) seasonal use and lower heating value:

E_{avg}= 0.88 x 0.175 + 0.86 x 0.275 + 0.70 x 0.450 + 0.61 x 0.100

E_{avg}= 0.8 g/kg

Sample calculation for efficiency year round use and high heating value:

η_{avg}= 82.34 x 0.437 + 82.18 x 0.238 + 81.34 x 0.275 + 83.07 x 0.050

η_{avg}= 82.1 %

Average Btu/hr for 8 Hour Burn Time, Btu/hr
Test Method 28 WHH section 13.7.2

$$\frac{Btu}{hr} = X1 + \{(8 - Y1) \times [(X2 - X1)/(Y2 - Y1)]\}$$

Where:

Y1	=	Test duration just above 8 hours
Y2	=	Test duration just below 8 hours
X1	=	Actual load for duration Y1
X2	=	Actual load for duration Y2

Sample calculation:

Btu/hr = 67254 + {(8 - 10.3) x [(148625 - 67254) / (4.71667 - 10.25)]}

Btu/hr = 100341 for 8 hour burn time