Non-Confidential Business Information (Non-CBI)

Certification Test Report

Valley Comfort Systems Inc.

Freestanding Wood Stove

Model Series: Blaze King 20.2 Series

Models: SC 20.2, CK 20.2, AF20.2

Prepared for:	Valley Comfort Systems Inc. 1290 Commercial Way Penticton, BC V2A 3H5 CANADA
Prepared by:	OMNI-Test Laboratories, Inc. 13327 NE Airport Way Portland, OR 97230 (503) 643-3788
Test Period:	August 22, 2017 – August 27, 2017
Report Date:	November 2017
Report Number:	0142WS013E

All data and information contained in this report are confidential and proprietary to Valley Comfort Systems Inc. Its significance is subject to the adequacy and representative character of the samples and to the comprehensiveness of the tests, examinations, or surveys made. The contents of this report cannot be copied or quoted, except in full, without specific, written authorization from Valley Comfort Systems Inc. and OMNI-Test Laboratories, Inc. No use of the OMNI-Test Laboratories, Inc. name, logo, or registered mark (O-TL) is permitted, except as expressly authorized by OMNI-Test Laboratories, Inc. in writing.

AUTHORIZED SIGNATORIES

This report has been reviewed and approved by the following authorized signatories:

Technicians:

Bruce Davis
OMNI-Test Laboratories, Inc.

Aaron Kravitz
OMNI-Test Laboratories, Inc.

QA Review:

Jared Sorenson, Technical Services Director
OMNI-Test Laboratories, Inc.

Evaluation Decision:

Sebastian Button, Testing Supervisor
OMNI-Test Laboratories, Inc.

11/6/2017
Issue Date

TABLE OF CONTENTS

PREFACE ..... (3 pages)

1. SAMPLING PROCEDURES AND TEST RESULTS 4
   Introduction, Sampling Procedure, Results 5
   Individual Run Summaries, Certification Testing 6
   Individual Run Summaries, Catalyst Equivalency 7
   Catalyst Equivalency Procedure Letter 8

   Summary Tables
   Table 1 - Particulate Emissions Results 11
   Table 2 - Particulate Emissions Results (First Hour) 11
   Table 3 – B415.1 Efficiency and CO Emissions 12
   Table 4 - Test Facility Conditions 12
   Table 5 - Fuel Measurements and Crib Descriptions - Pretest 13
   Table 6 - Fuel Measurements and Crib Descriptions - Test 13
   Table 7 - Dilution Tunnel Gas Measurements and Sampling Data 14
   Table 8 – Average Temperature Data 14
   Table 9 - Pretest Configurations 15
   Table 10 - Test Configurations 16

2. PHOTOGRAPHS/APPLIANCE DESCRIPTION/DRAWINGS 17
   Appliance Photographs 18
   Fuel Photographs 19
   Appliance Description 23

3. TEST DATA BY RUN 24
   Run 1 27
   Run 2 45
   Run 3 60
   Run 4 73
   Run 5 95
   Run 6 112
   Run 7 125

4. QUALITY ASSURANCE/QUALITY CONTROL 136
   Sample Analysis 138
   Calibrations – EPA Method 28R, ASTM E2515, ASTM E2780 151
   Example Calculations 176

Appendix A. ..... Labeling & Owner's Manual

Section 1

Introduction
Sampling Procedure
Test Results
Individual Run Summaries – Certification Testing
Individual Run Summaries – Catalyst Equivalency Testing
Summary Tables

INTRODUCTION

Valley Comfort Systems Inc. retained *OMNI* to perform U.S. Environmental Protection Agency (EPA) certification testing on the Blaze King 20.2 Series wood stove. The Blaze King 20.2 Series wood stove is a catalytic-type room heater. The firebox is constructed of mild steel. Usable firebox volume was measured to be 1.82 cubic feet and the stove is vented through 6" collar located on the top of the appliance.

The testing was performed at Blaze King Industries located at 146 A St., in Walla Walla Washington. The altitude of the laboratory is 1,191 feet above sea level. The unit was received in good condition and logged in on 8/22/17. The tested unit was labeled with *OMNI* ID # 2253. *OMNI* representative Aaron Kravitz conducted tests 1 – 6, and Bruce Davis conducted test 7 of the certification testing and completed all testing by September 7, 2017. Two additional tests (tests 6 and 7) were performed to verify equivalency of the Applied Ceramics catalyst to the Clariant catalyst used during certification test numbers 1-5.

This report is organized in accordance with the EPA-recommended outline and is summarized in the Table of Contents immediately preceding this section. The results in this report are limited to the item submitted.

SAMPLING PROCEDURE

The Blaze King 20.2 Series wood stove was tested in accordance with the U.S. EPA 40 CFR Part 60, Subpart AAA – Standards of Performance for New Residential Wood Heaters using EPA Method 28R, ASTM E2515 and ASTM E2780. Particulate emissions were measured using sampling trains consisting of two filters (front and back).

The model 20.2 Series was tested for thermal efficiency and carbon monoxide (CO) emissions in accordance with CSA B415.1-10.

SUMMARY OF RESULTS

The weighted average emissions of the four test runs included in the results indicate a particulate emission rate of 0.7 grams per hour. Testing on the 20.2 series consisted of four certification tests used for a weighted average (1, 2, 3, and 4), one fan confirmation test (5), and two catalyst confirmation tests (6-7). The 20.2 Series results are within the emission limit of 2.0 g/h. for affected appliances manufactured on or after May 15, 2020.

The catalyst equivalency tests met the requirements described in the letter data Dec 15, 2016 from the EPA office of compliance. Both the category 1 test and the category 4 test resulted in emissions rates below that of the original tests plus 0.5 g/hr.

The proportionality results for all 7 test runs were acceptable. Quality check results for each test run are presented in Section 3 of this report.

INDIVIDUAL RUN SUMMARIES – Certification Testing

Run 1 - Attempted category 2 burn rate at primary air setting of 9 degrees from horizontal setting on thermostat. Observed burn rate of 1.04 kg/hr. (category 2). No sampling anomalies occurred, so this test run is valid for inclusion in the weighted average.

Run 2 - Attempted category 3 burn rate at primary air setting of 36 degrees from horizontal setting on thermostat. Observed burn rate of 1.54 kg/hr. (category 3). No sampling anomalies occurred, so this test run is valid for inclusion in the weighted average.

Run 3 - Attempted category 4 burn rate at primary air setting of fully open (90 degrees from horizontal). Observed burn rate of 2.26 kg/hr. (category 4). No additional sampling anomalies occurred, so this test run is valid for inclusion in the weighted average.

Run 4 - Attempted category 1 burn rate at primary air setting of 0 degrees from horizontal (level) on thermostat; Observed burn rate of 0.60 kg/hr. (category 1). No sampling anomalies occurred, so this test run is valid for inclusion in the weighted average.

Run 5 - Fan confirmation test. Attempted category 2 burn rate at primary air setting of 36 degrees from horizontal setting on thermostat. This setting is equivalent to the setting used for category 3, but a slower burn was anticipated due to the disuse of the fan. Observed burn rate of 1.18 kg/hr. (category 2). No sampling anomalies occurred, as a fan confirmation test, this is not included in the weighted average.

INDIVIDUAL RUN SUMMARIES – Catalyst equivalency testing

Run 6 - After retrofitting the unit with an Applied Ceramics catalyst, attempted category 4 burn rate at primary air setting of fully open (90 degrees from horizontal). Observed burn rate of 2.26 kg/hr. (category 4). No sampling anomalies occurred, so this test run is valid for catalyst equivalency determination.

Run 7 - Continued testing with alternate catalyst. Attempted category 1 burn rate at primary air setting of 0 degrees from horizontal (level) on thermostat; Observed burn rate of 0.59 kg/hr. (category 1). No sampling anomalies occurred, so this test run is valid for catalyst equivalency determination.

CATALYST EQUIVALENCY PROCEDURE LETTER

UNITED STATES ENVIRONMENTAL PROTECTION AGENCY
WASHINGTON, DC 20460

OFFICE OF
COMPLIANCE

DEC 15 2016

Chris Neufeld
Vice President
Blaze King Industries, Inc.
146 A Street
Walla Walla, Washington 99362

RE: Blaze King Industries, Inc. (Blaze King) Request for Catalyst Suitable Replacement Procedures

Dear Mr. Neufeld:

This letter is in response to the February 3, 2016, Blaze King letter requesting the United States Environmental Protection Agency (EPA) implement a program to allow catalyst equipped wood heater manufacturers and suppliers to seek suitable replacement status during the life cycle of the product. As discussed below, replacement catalysts may be used if equivalency is properly demonstrated.

To have a catalyst deemed suitable for replacement, equivalency testing must be conducted by an EPA-approved test laboratory. Consistent with the 2015 Standards of Performance for New Residential Wood Heaters, New Residential Hydronic Heaters and Forced-Air Furnaces (Subpart AAA) (2015 Standards), the manufacturer must notify the EPA of the date that certification testing (catalyst equivalency testing) is scheduled to begin as stated in Section 60.534(g). This notice must be received by the EPA at least 30 days before the start of testing. EPA will consider the following steps to be adequate to demonstrate replacement catalyst equivalency:

1) The manufacturer uses the same test method as the original certification test was conducted. If the original certification test method is no longer valid, the manufacturer requests an alternative test method prior to testing.

2) The replacement catalyst is aged 50 hours prior to catalytic equivalency testing. The catalyst is tested in the same model or model line unit in which the original catalyst was tested.

3) Both a Category 1 run and Category 4 run are conducted by an EPA-approved test laboratory.

4) The new Category 1 run is compared to the original Category 1 run, and the new Category 4 run is compared to the original Category 4 run. The new runs are not more than 0.5 grams/hour greater than the original certification test results for each run. They are compared separately, with no averaging. In equation form:

Replacement catalyst category 1 ≤ (original catalyst category 1 + 0.5g/hr)

AND

Replacement catalyst category 4 ≤ (original catalyst category 4 + 0.5g/hr)

As noted in Section 60.533(k)(4)[1], the EPA Administrator must approve the change in the catalyst in advance, with proper documentation of the equivalency testing. This documentation consists of the original certification test report category 1 and 4 data and the new category 1 and 4 test data results. All demonstration test data must be sent to WoodHeaterReports@epa.gov within 60 days after the date of completing the test. EPA considers the catalyst equivalency testing to be a form of certification testing governed by the provisions in Section 60.534.

The EPA finds the request outside the scope of an applicability determination. The term "applicability determination" is limited to the Agency's formal decisions, issued in response to a non-hypothetical and site-specific request about the applicability of a specific rule to a specific facility. Therefore, the EPA considers this response to be a regulatory interpretation to a source request for clarification.[2]

This response has been prepared in consultation with the Office of Air Quality, Planning, and Standards, and the Office of General Counsel. If you have any questions, please contact Rafael Sanchez of my staff at 202-564-7028 or email at sanchez.rafael@epa.gov.

Sincerely,

Edward J. Messina

Edward J. Messina, Director
Monitoring, Assistance, and Media Programs Division
Office of Compliance

[1] A change in the make, model or composition of a catalyst is presumed to affect particulate matter and carbon monoxide emissions and efficiency, unless the change has been requested by the heater manufacturer and has been approved in advance by the Administrator, based on test data that demonstrate that the replacement catalyst is equivalent to or better than the original catalyst in terms of particulate matter emission reduction.
[2] This regulatory interpretation updates EPA Applicability Determination WDS-138 (July 6, 1990).

SUMMARY TABLES

Table 1 – Particulate Emissions

Run	**Burn Rate** (kg/hr dry)	**ASTM E2515 Emissions** (g/hr)
1	1.04	0.58
2	1.54	0.96
3	2.26	1.53
4	0.60	0.22
5	1.18	0.55
Catalyst Equivalency Tests		
6	2.26	1.91
7	0.59	0.18
Weighted particulate emission average of four test runs: **0.73** g/h		

Note: Run 5 is a fan confirmation and not included in the weighted average. Tests 6 and 7 are catalyst equivalence tests and not included in the weighted average.

Table 2 – Particulate Emissions (First Hour)

Run	**Emissions – 1st Hour** (g/hr)
1	1.12
2	1.55
3	2.41
4	0.40
5	1.41
Catalyst Equivalency Tests	
6	2.00
7	0.29

Table 3 – B415.1 Efficiency and CO Emissions

Run	Heat Output (BTU/hr)	(%) HHV Efficiency	(%) LHV Efficiency	CO Emissions (g/MJ Output)	CO Emissions (g/kg Dry Fuel)	CO Emissions (g/min)
1	15,450	78.99%	85.37%	1.69	26.37	0.46
2	22,295	77.09%	83.32%	2.74	41.86	1.07
3	29,785	70.35%	76.04%	2.67	37.25	1.40
4	8,900	79.12%	85.51%	2.50	39.14	0.39
5	16,254	73.57%	79.51%	1.96	28.55	0.56
Catalyst Equivalency Tests						
6	28,562	67.92%	73.41%	2.85	38.30	1.43
7	8,847	80.63%	87.15%	2.25	35.86	0.35
Weighted average HHV efficiency of four test runs: **77.4%**.						

Note: See note from Table 1.

Table 4 – Test Facility Conditions

Run	Room Temp (°F)		Barometric Pressure (Hg)		Air Velocity (ft/min)	
	Before	**After**	**Before**	**After**	**Before**	**After**
1	83	79	28.69	28.64	<50	<50
2	79	79	28.72	28.70	<50	<50
3	85	82	28.68	28.60	<50	<50
4	77	75	28.58	28.59	<50	<50
5	69	75	28.76	28.74	<50	<50
Catalyst Equivalency Tests						
6	77	78	28.68	28.64	<50	<50
7	73	79	28.74*	28.57*	<50	<50

*hand notes show sea-level corrected data. All calculations performed with uncorrected values.

Table 5 – Fuel Measurement and Crib Description Summary – PRETEST

Run	**Pretest Fuel Weight** (lbs)	**Pretest Moisture** (Dry basis - %)	**Coal Bed Weight** (lbs)
1	14.3	21.65	2.8
2	14.3	20.21	2.5
3	14.9	22.41	3.2
4	14.7	21.41	3.0
5	14.9	22.41	3.0
Catalyst Equivalency Tests			
6	14.9	22.41	2.9
7	14.3	20.72	2.8

Table 6 – Fuel Measurement and Crib Description Summary – TEST

Run	**Test Fuel Wet Basis** (lbs)	**Firebox Volume** (ft^3)	**Loading Density Wet Basis** (lbs/ft^3)	**Test Fuel Dry Basis** (lbs)	**Length** (in)	**2x4s Used**	**4x4s Used**
1	12.7	1.82	7.06	10.6	13	3	2
2	12.1	1.82	6.65	9.9	13	3	2
3	13.0	1.82	7.14	10.7	13	3	2
4	12.2	1.82	6.70	10.0	13	3	2
5	11.9	1.82	6.54	9.8	13	3	2
Catalyst Equivalency Tests							
6	12.0	1.82	6.59	9.9	13	3	2
7	11.6	1.82	6.37	9.7	13	3	2

Table 7 – Dilution Tunnel Gas Measurements and Sampling Data Summary

		Average Dilution Tunnel Gas Measurements		
Run	**Length of Test** (min)	**Velocity** (ft/sec)	**Flow Rate** (dscf/min)	**Temperature** (°F)
1	276	14.87	156.61	94.5
2	175	13.45	140.72	98.8
3	129	13.66	138.56	114.9
4	454	13.16	140.73	84.4
5	227	13.33	141.55	91.4
Catalyst Equivalency Tests				
6	120	13.70	137.73	120.6
7	450	13.08	139.41	87.3

Table 8 - Average Temperature Data

Run	Beginning Surface Temperature Average[a]	Ending Surface Temperature Average[a]	Surface Delta T[b]
1	407	393	14
2	500	439	61
3	508	462	46
4	325	286	39
5	423	452	29
Catalyst Equivalency Tests			
6	477	470	7
7	298	277	21
a. All temperatures are in degrees F.			
b. Represents the difference between beginning and ending average surface temperatures.			

Table 9 – Pretest Configuration

Run	Combustion Air	Fuel Added	Fuel Removed	Time (min)
1	9 degrees from horizontal	N/A	N/A	60
2	36 degrees from horizontal	N/A	N/A	107
3	90 degrees from horizontal (max)	N/A	N/A	77
4	0 degrees from horizontal	N/A	N/A	75
5	36 degrees from horizontal	N/A	N/A	119
Catalyst Equivalency Tests				
6	90 degrees from horizontal (max)	N/A	-0.4 lb @ 63 min	78
7	0 degrees from horizontal	N/A	N/A	60

Table 10 – Test Configurations

Run	Five-Minute Startup Procedures		Combustion Air
1	Fuel Loading: Bypass: Door: Primary Air: Fan:	Fuel loaded by 45 seconds. Closed entire test. Open for 50 seconds then closed for remainder of test. Fully open until 4:45 minutes then quickly set to test setting. Turned off for the first 30 minutes then turned to medium low for the remainder of the test.	9 degrees from horizontal
2	Fuel Loading: Bypass: Door: Primary Air: Fan:	Fuel loaded by 30 seconds. Closed entire test. Open for 35 seconds then closed for remainder of test. Fully open until 4:50 minutes then quickly set to test setting. Turned off for the first 30 minutes then turned to medium high for the remainder of the test.	36 degrees from horizontal
3	Fuel Loading: Bypass: Door: Primary Air: Fan:	Fuel loaded by 30 seconds. Closed entire test. Open for 35 seconds then closed for remainder of test. Fully open for the entire test. Turned off for the first 30 minutes then turned to high for the remainder of the test.	90 degrees from horizontal (max)
4	Fuel Loading: Bypass: Door: Primary Air: Fan:	Fuel loaded by 30 seconds. Closed entire test. Open for 35 seconds then closed for remainder of test. Fully open until 4:25 minutes then quickly set to test setting. Turned off for the first 30 minutes then turned to low for the remainder of the test.	0 degrees from horizontal
5	Fuel Loading: Bypass: Door: Primary Air: Fan:	Fuel loaded by 30 seconds. Closed entire test. Open for 40 seconds then closed for remainder of test. Fully open until 4:55 minutes then quickly set to test setting. Turned off for the first the entire test.	36 degrees from horizontal
Catalyst Equivalency Tests			
6	Fuel Loading: Bypass: Door: Primary Air: Fan:	Fuel loaded by 40 seconds. Closed entire test. Open for 45 seconds then closed for remainder of test. Fully open for the entire test. Turned off for the first 30 minutes then turned to high for the remainder of the test.	90 degrees from horizontal (max)
7	Fuel Loading: Bypass: Door: Primary Air: Fan:	Fuel loaded by 25 seconds. Closed entire test. Open for 27 seconds then closed for remainder of test. Fully open until 5 minutes then quickly set to test setting. Turned off for the first 30 minutes then turned to low for the remainder of the test.	0 degrees from horizontal

Section 2

Appliance Photographs
Fuel Photographs
Appliance Description

APPLIANCE PHOTOGRAPHS

Appliance Front/Right

Appliance Front/Left

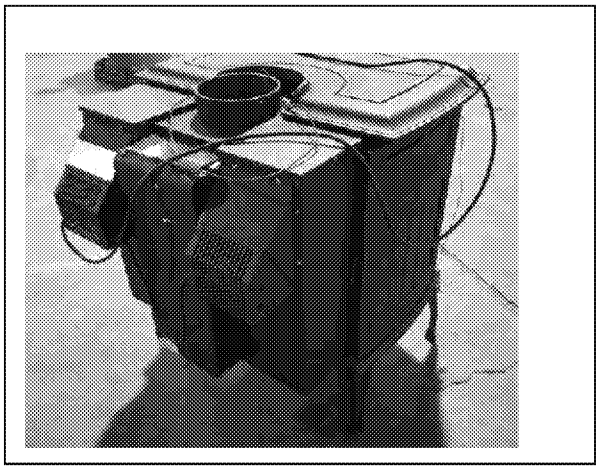

Appliance Rear/Left

Appliance Right

FUEL PHOTOGRAPHS
Test Dates: August 29, 2017 – September 7, 2017

Run 1 – Fuel

Run 1 – Newly Loaded Stove

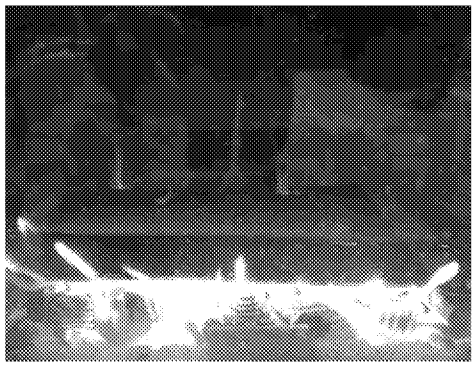

Run 2 – Fuel

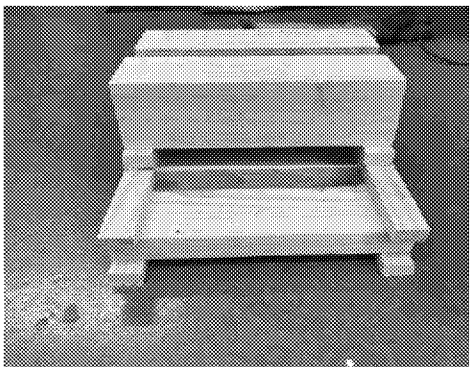

Run 2 – Newly Loaded Stove

Run 3 – Fuel

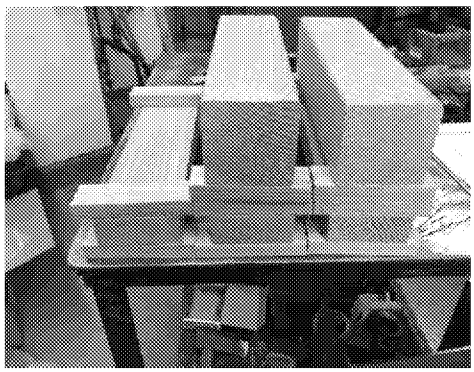

Run 3 – Newly Loaded Stove

Run 4 – Fuel

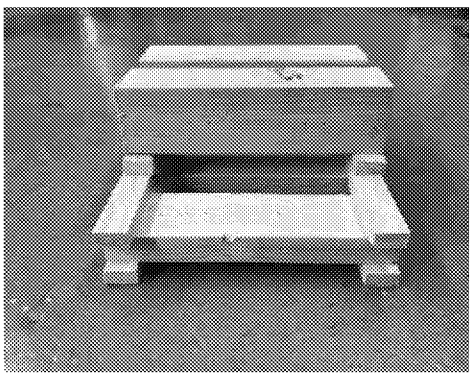

Run 4 – Newly Loaded Stove

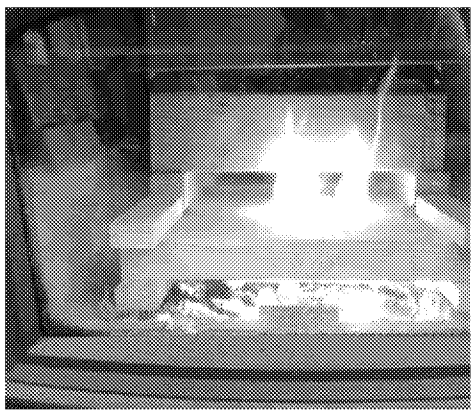

Run 5 – Fuel

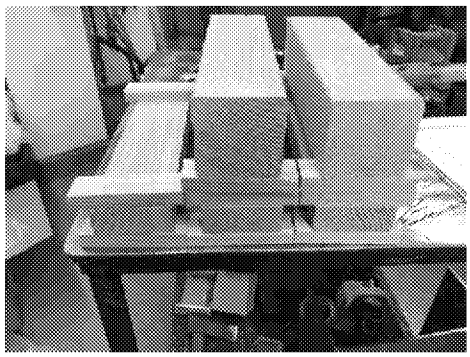

Run 5 – Newly Loaded Stove

Run 6 – Fuel

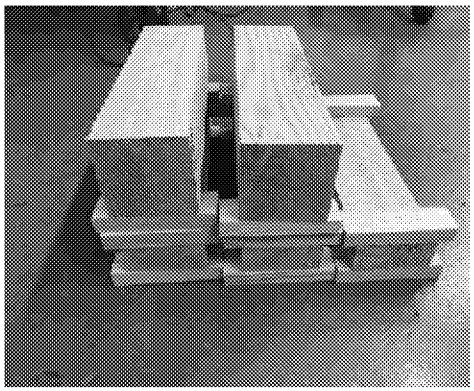

Run 6 – Newly Loaded Stove

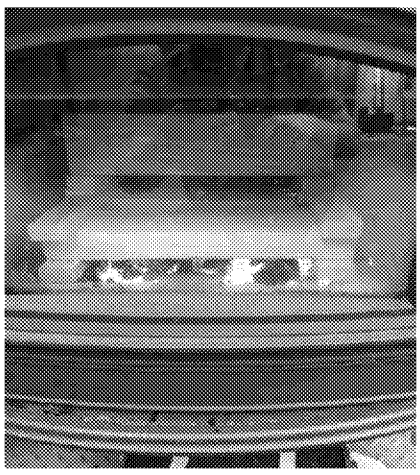

Run 7 – Fuel

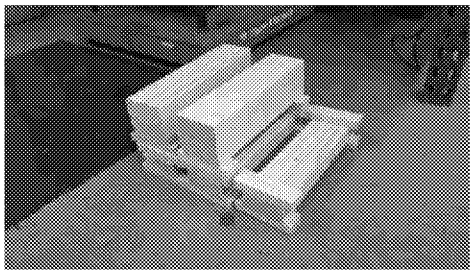

Run 7 – Newly Loaded Stove

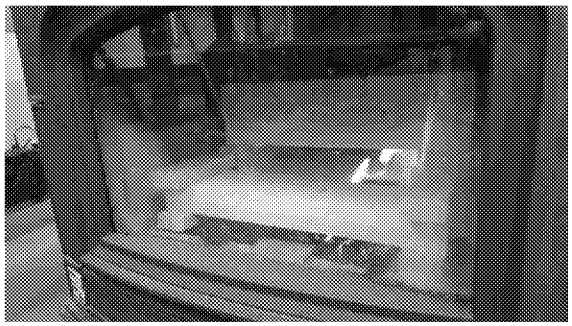

APPLIANCE PHOTOGRAPHS – SEALED

Sealed Unit – Front

Sealed Catalyst

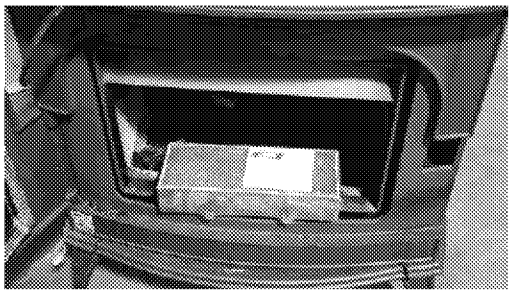

APPLIANCE DESCRIPTION

Appliance Manufacturer: Valley Comfort Systems Inc.

Wood Stove Model: Sirocco 20.2

Additional Models: The Blaze King 20.2 series comes in three models: the Ashford (AF) 20.2, the Sirocco (SC) 20.2, and Chinook (CK) 20.2. The air intake, thermostat, internal air tubes, internal firebox dimensions, combustor position, bypass mechanisms, and flue exhaust are the exact same for each unit. Where the units differ from each other is with respect to external, aesthetic features.

The CK20.2 is a European styled stove which is supported by slender legs in each corner with large 16 gauge shields that span from stove top to floor on either side of the unit. The SC20.2 is a modern style stove with the option of either a pedestal mount or cast iron legs. The AF20.2 comes dressed in a full cast iron shell (front with affixed door, sides, top, trim pieces and legs) in multiple color options. It has a standard ash drawer and an optional fan kit that attaches to the permanent, rear heat shield.

Type: Catalytic, thermostatic, freestanding woodstove with an optional room air blower.

Materials of Construction: The unit is constructed primarily of mild steel with a cast iron shell. The firebox is lined with pumice firebrick that measures 9" by 4.5". The feed door has a 10-7/8-inch by 17-7/8-inch glass panel and 7/8-inch rope gasket.

Air Introduction System: Air enters the firebox through an opening located at the rear/bottom of the appliance.

Combustion Control Mechanisms: The combustion air inlet is controlled by a dial knob at the top/rear of the appliance on the right side.

Combustor: Clariant or Applied Ceramics – 10.65" x 4" x 2" – verified by catalyst equivalency testing.

Internal Baffles: A steel baffle is mounted in the upper portion of the firebox. The flame path is forced to the front of the firebox where it travels up through the opening into the catalyst.

Other Features: Optional fan accessory.

Flue Outlet: The 6-inch diameter flue outlet is located at the top of the unit.

Specific Written Instructions: See Appendix A of this report. All markings and instruction materials were reviewed for content prior to printing.

Section 3

Test Data by Run

EPA Weighted Average Emissions
EPA Method 28R

Client:	Valley Comfort	Status:	Final
Stove Model:	Sirocco 20.2	Stove Type:	Catalytic Stove
Test Dates:	8/22/17 - 8/25/17		
Project Number:	0142WS013E		
Tracking Number:	2253		

Weighted Averages	Emissions (g/hr):	0.731
	HHV Efficeincy (%):	77.4
	LHV Efficeincy (%):	83.6

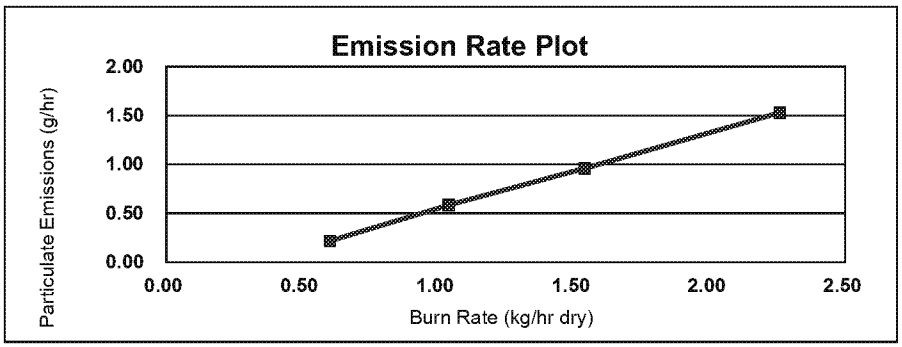

Run #	4	
Burn Rate (dry kg/hr)	0.60	
Category	1	
LHV Efficiency (%)	85.5	
HHV Efficiency (%)	79.1	
Emissions (g/hr)	0.217408841	
Weighting Factor	0.402	21.83%

Run #	1	
Burn Rate (dry kg/hr)	1.04	
Category	2	
LHV Efficiency (%)	85.37462576	
HHV Efficiency (%)	78.99066045	
Emissions (g/hr)	0.584627778	
Weighting Factor	0.673	36.59%

Run #	2	
Burn Rate (dry kg/hr)	1.54	
Category	3	
LHV Efficiency (%)	83.31777324	
HHV Efficiency (%)	77.08761094	
Emissions (g/hr)	0.96	
Weighting Factor	0.538	29.26%

Run #	3	
Burn Rate (dry kg/hr)	2.26	
Category	4	
LHV Efficiency (%)	76.03505809	
HHV Efficiency (%)	70.34946744	
Emissions (g/hr)	1.529845688	
Weighting Factor	0.227	12.33%

Conditioning Data - ASTM E2780/ ASTM E2515

Manufacturer: Valley Comfort
Model: 20.2 Series
Tracking No.: 2253
Project No.: 0142WS013E

Test Date: 8/18-24/2017
Technician: Charlie Bishop
Operation Category: II-III

Elapsed Time (hr)	Flue Gas Temp (° F)	Certification Catalyst Exit Temp (° F)	Equivalent Catalyst Exit Temp (° F)
0	141.0	1108.2	789.9
1	374.2	1446.3	822.5
2	387.3	1155.7	1013.0
3	411.0	1315.2	770.0
4	349.2	1144.8	1236.0
5	426.3	1027.2	1171.0
6	342.4	989.9	1187.0
7	378.4	732.5	866.1
8	332.8	988.9	778.2
9	387.0	1041.7	717.7
10	126.8	865.5	989.7
11	223.4	758.2	1085.0
12	200.2	760.8	1190.0
13	182.1	705.8	807.8
14	183.1	658.1	684.6
15	169.3	864.5	782.4
16	195.8	1185.6	666.8
17	201.0	1231.3	655.6
18	195.5	973.1	541.3
19	163.4	655.8	603.6
20	223.3	1055.8	658.9
21	230.5	983.0	635.8
22	236.9	869.7	635.7
23	206.0	794.8	632.1
24	231.0	755.6	615.9
25	243.2	504.8	842.1
26	243.9	736.4	915.0
27	216.6	929.4	829.0
28	235.4	847.5	707.9
29	233.7	679.5	710.2
30	238.9	951.5	592.6
31	247.8	723.0	517.1
32	246.0	975.6	1272.0
33	236.3	1820.7	1243.0
34	244.3	976.1	1401.0
35	248.2	470.8	1146.0
36	239.7	1065.7	892.2
37	239.3	1548.1	776.2
38	247.1	1419.9	570.0
39	243.2	1211.8	1300.0
40	248.5	1333.7	1194.0
41	550.7	876.6	1159.0
42	548.2	936.7	711.3
43	545.6	1026.3	649.0
44	543.6	525.4	581.0
45	541.7	572.5	603.6
46	538.3	1458.4	710.7
47	535.5	1394.1	701.4
48	533.3	1825.0	613.7
49	529.0	1421.3	653.3
50	527.2	1164.0	789.6

Technician Signature:

RUN 1

Wood Heater Preburn Data - ASTM E2780

Run: 1

Technician Signature:

Manufacturer:	Valley Comfort
Model:	20.2 Series
Tracking No.:	2253
Project No.:	0142WS013E
Test Date:	8/22/17
Beginning Clock Time:	12:34

Preburn Fuel Data

Fuel Piece Lengths (in.):	13
Total Preburn Weight (lb):	14.3

Moisture Readings (% DB):	22.0	24.6	24.4
	19.9	19.3	19.8
	21.1	23.1	
	21.7	20.6	
Avg PB Moisture (% DB):	**21.65**		

Coal Bed Range (lb):	**2.5** (min)	**3.2** (max)

			Temperatures (°F)							
Elapsed Time (min)	Scale (lb)	Stack Draft (in H_2O)	FB Top	FB Bottom	FB Back	FB Left	FB Right	Avg. FB	Stack	Ambient
0	3.0	-0.02	671	565	334	475	464	**502**	145	85
1	3.0	-0.019	662	562	332	469	459	**497**	143	84
2	3.4	-0.018	653	559	330	464	453	**492**	142	84
3	3.5	-0.018	644	556	328	457	448	**487**	140	84
4	3.4	-0.017	635	553	326	452	442	**482**	139	85
5	3.4	-0.017	627	550	324	446	437	**477**	137	85
6	3.4	-0.016	619	547	321	439	432	**472**	135	85
7	3.4	-0.015	610	544	318	435	426	**467**	134	85
8	3.4	-0.015	603	541	316	429	421	**462**	133	85
9	3.4	-0.015	595	538	313	424	416	**457**	132	85
10	3.4	-0.015	588	535	310	418	411	**452**	131	84
11	3.4	-0.014	581	532	308	413	406	**448**	133	84
12	3.4	-0.014	574	530	304	409	402	**444**	133	85
13	3.4	-0.015	568	527	301	404	398	**440**	136	85
14	3.4	-0.015	562	525	299	400	394	**436**	138	85
15	3.4	-0.015	557	523	295	397	390	**432**	143	85
16	3.4	-0.015	553	520	292	392	387	**429**	144	85
17	3.4	-0.016	550	519	290	389	384	**426**	145	85
18	3.4	-0.016	546	517	287	386	382	**424**	148	85
19	3.4	-0.016	543	516	284	384	379	**421**	153	84
20	3.4	-0.016	540	515	282	381	378	**419**	156	85
21	3.3	-0.016	537	514	280	379	376	**417**	156	84
22	3.3	-0.017	535	513	277	377	374	**415**	159	85
23	3.3	-0.017	533	513	276	376	373	**414**	159	85
24	3.3	-0.017	531	513	275	375	372	**413**	163	84
25	3.3	-0.017	529	513	273	374	372	**412**	168	84
26	3.3	-0.018	527	514	271	374	371	**411**	164	84
27	3.3	-0.019	526	515	270	373	371	**411**	168	84
28	3.2	-0.02	524	515	270	374	370	**411**	169	85
29	3.2	-0.019	522	515	269	373	369	**410**	170	84
30	3.2	-0.02	520	514	268	373	368	**409**	171	84
31	3.2	-0.02	518	513	268	373	366	**408**	172	85
32	3.2	-0.02	516	512	267	372	365	**406**	170	85
33	3.1	-0.02	514	510	265	373	364	**405**	176	84
34	3.1	-0.02	512	509	264	372	363	**404**	175	84
35	3.1	-0.021	511	508	264	372	361	**403**	176	84
36	3.1	-0.021	509	507	263	371	360	**402**	178	84

Wood Heater Preburn Data - ASTM E2780

Run: 1

Technician Signature:

Manufacturer:	Valley Comfort
Model:	20.2 Series
Tracking No.:	2253
Project No.:	0142WS013E
Test Date:	8/22/17
Beginning Clock Time:	12:34

Preburn Fuel Data

Fuel Piece Lengths (in.):	13
Total Preburn Weight (lb):	14.3

Moisture Readings (% DB):	22.0	24.6	24.4
	19.9	19.3	19.8
	21.1	23.1	
	21.7	20.6	
Avg PB Moisture (% DB):	**21.65**		

Coal Bed Range (lb):	**2.5** (min)	**3.2** (max)

			Temperatures (°F)							
Elapsed Time (min)	Scale (lb)	Stack Draft (in H_2O)	FB Top	FB Bottom	FB Back	FB Left	FB Right	Avg. FB	Stack	Ambient
37	3.1	-0.022	507	506	263	371	359	**401**	179	84
38	3.1	-0.023	506	505	261	372	357	**400**	181	84
39	3.1	-0.023	505	504	260	370	358	**399**	184	85
40	3.1	-0.023	504	504	259	371	357	**399**	183	84
41	3.0	-0.023	504	505	258	370	357	**399**	184	84
42	3.0	-0.023	504	506	258	370	357	**399**	184	84
43	3.0	-0.023	504	508	257	370	357	**399**	187	84
44	3.0	-0.023	504	509	257	371	357	**400**	184	84
45	3.0	-0.023	504	511	256	371	357	**400**	186	84
46	3.0	-0.023	504	513	255	371	358	**400**	184	84
47	2.9	-0.023	504	515	255	371	358	**401**	186	84
48	2.9	-0.023	504	517	255	370	358	**401**	182	84
49	2.9	-0.023	504	519	255	370	358	**401**	188	84
50	2.9	-0.023	505	521	254	370	358	**402**	184	84
51	2.9	-0.023	504	522	254	370	358	**402**	183	84
52	2.9	-0.024	504	524	254	370	358	**402**	184	84
53	2.9	-0.024	505	525	253	370	358	**402**	185	84
54	2.8	-0.026	505	525	253	369	358	**402**	186	84
55	2.8	-0.024	505	526	253	370	358	**402**	188	85
56	2.8	-0.024	506	526	253	369	358	**402**	190	84
57	2.8	-0.024	507	527	254	369	357	**403**	189	85
58	2.8	-0.024	507	527	254	369	357	**403**	191	85
59	2.8	-0.024	507	527	254	369	358	**403**	186	84
60	2.8	-0.024	508	527	253	368	357	**403**	189	84

Wood Heater Test Fuel Data - ASTM E2780

Manufacturer:	Valley Comfort	PB Time	12:00	12% Cal:	12.0
Model:	20.2 Series	PB Temp	78	22% Cal:	22.0
Tracking No.:	2253				
Project No.:	0142WS013E	Test Time	12:00		
Test Date:	8/22/2017	Test Temp	80		
Run No.:	1				

Firebox Volume (ft^3):	1.8	**Total Fuel Weight (Dry Basis, lb):**	10.6	
Fuel Piece Length (in):	13	Fuel Density (lb/ft^3, Dry Basis):	30.10	OK
2x4 Crib Weight (lb):	5.7	Loading Density (lb/ft^3, Wet	7.06	OK
4x4 Crib Weight (lb):	7	2x4 Percentage:	45%	OK

Coal Bed Range (20-25%): **2.54 - 3.175**

Test Fuel Piece	Weight (lb)	Size	Readings (Dry Basis %)			Dry Weight (lb)
1	1.6	2"x 4"	18.6	19.0	19.1	1.35
2	1.4	2"x 4"	19.9	20.6	20.5	1.16
3	1.4	2"x 4"	19.3	18.6	21.0	1.17
4	3.3	4"x 4"	23.2	23.8	23.2	2.67
5	3.3	4"x 4"	19.0	19.8	19.7	2.76

Spacer Readings (Dry Basis %)

16.7	8.2
17.5	17.8
21.9	16.2
18.1	16.4
22.3	19.7
13.3	22.3
22.2	22.5

Technician Signature:

Wood Heater Test Data - ASTM E2780 / ASTM E2515

Run: 1

Manufacturer: Valley Comfort
Model: 20.2 Series
Tracking No.: 2253
Project No.: 0142WS013E
Test Date: 22-Aug-17
Beginning Clock Time: 14.29

Total Sampling Time: 276 min
Recording Interval: 1 min
Background Sample Volume: 0 cubic feet

Meter Box Y Factor: 1.003 (1) 0.997 (2) N/A (Amb)

Barometric Pressure:	Begin	Middle	End	Average
	28.69	28.68	28.64	28.67 "Hg

OMNI Equipment Numbers: 464,410,132,576,318,432,419,371,372,432,296-T55,567,413,592

PM Control Modules: 371/372
Dilution Tunnel MW(dry): 29.00 lb/lb-mole
Dilution Tunnel MW(wet): 28.78 lb/lb-mole
Dilution Tunnel H2O: 2.00 percent
Dilution Tunnel Static: -0.170 "H2O
Tunnel Area: 0.19635 ft2
Pitot Tube Cp: 0.99

Avg. Tunnel Velocity: 14.87 ft/sec.
Initial Tunnel Flow: 155.5 scfm
Average Tunnel Flow: 156.6 scfm
Post-Test Leak Check (1): 0.000 cfm @ -15 in. Hg
Post-Test Leak Check (2): 0.000 cfm @ -17 in. Hg
Average Test Piece Fuel Moisture: 20.35 Dry Basis %

Technician Signature:

Velocity Traverse Data

	Pt.1	Pt.2	Pt.3	Pt.4	Pt.5	Pt.6	Pt.7	Pt.8	Center	
Initial dP	0.040	0.050	0.054	0.036	0.040	0.054	0.050	0.038	0.054	"H2O
Temp:	90	91	91	91	91	91	91	91	91	°F

V_{strav} 14.82 ft/sec V_{scent} 16.07 ft/sec F_p 0.922

	Particulate Sampling Data														Fuel Weight (lb)		Temperature Data (°F)													Stack Gas Data		
Elapsed Time (min)	Gas Meter 1 (ft^3)	Gas Meter 2 (ft^3)	Sample Rate 1 (cfm)	Sample Rate 2 (cfm)	Orifice dH 1 ("H_2O)	Meter 1 Temp (°F)	Meter 1 Vacuum ("Hg)	Orifice dH 2 ("H_2O)	Meter 2 Temp (°F)	Meter 2 Vacuum ("Hg)	Dilution Tunnel (°F)	Dilution Tunnel Center dP	Pro. Rate 1	Pro. Rate 2	Scale Reading	Weight Change	Firebox Top	Firebox Bottom	Firebox Back	Firebox Left	Firebox Right	Avg. Stove Surface	Catalyst Exit	Stack	Filter 1	Dryer Exit 1	Filter 2	Dryer Exit 2	Ambient	Draft ("H_2O)	CO_2 (%)	CO (%)
0	0.000	0.000			0.59	80	-0.56	1.17	79	-0.4	91	0.054			12.7		515	527	263	369	359	407	762	280	81	70	81	70	83	-0.038	1.65	0.29
1	0.130	0.134	0.13	0.13	1.67	80	-0.88	1.41	80	-0.7	105	0.054	87	92	12.7	0	514	528	269	365	354	406	642	331	82	70	82	70	83	-0.046	0.96	0.14
2	0.272	0.280	0.14	0.15	1.68	80	-0.9	1.39	81	-0.8	103	0.054	95	100	12.6	-0.1	512	527	272	361	351	405	705	343	82	70	82	70	83	-0.052	4.66	0
3	0.414	0.426	0.14	0.15	1.67	80	-0.89	1.38	79	-0.8	103	0.054	95	100	12.5	-0.1	519	527	273	359	350	406	793	353	82	70	82	70	82	-0.054	5.46	0
4	0.556	0.571	0.14	0.15	1.67	79	-0.89	1.38	80	-0.8	104	0.054	95	100	12.4	-0.1	525	527	273	357	347	406	801	377	83	70	82	70	83	-0.055	4.93	0
5	0.700	0.716	0.14	0.15	1.82	79	-1.08	1.36	79	-0.7	104	0.054	97	100	12.0	-0.4	530	526	273	355	346	406	804	371	83	70	83	70	83	-0.053	5.04	0
6	0.849	0.861	0.15	0.15	1.82	79	-1.06	1.34	78	-0.7	99	0.054	100	100	12.3	0.3	532	526	272	353	345	406	796	318	83	70	83	70	82	-0.049	4.85	0
7	0.997	1.006	0.15	0.15	1.83	79	-1.07	1.33	79	-0.7	98	0.054	99	99	12.2	-0.1	533	525	272	351	343	405	792	306	83	70	83	70	82	-0.049	4.46	0
8	1.146	1.151	0.15	0.15	1.84	79	-1.08	1.32	79	-0.7	97	0.054	99	99	12.2	0	534	523	272	348	341	404	780	294	83	70	83	70	83	-0.048	4.47	0
9	1.295	1.296	0.15	0.15	1.83	79	-1.07	1.32	78	-0.7	96	0.054	99	99	12.1	-0.1	534	522	271	346	339	402	769	294	83	70	83	70	83	-0.046	4.69	0
10	1.443	1.440	0.15	0.14	1.83	79	-1.07	1.31	79	-0.7	96	0.054	99	98	12.0	-0.1	533	520	270	342	337	400	770	289	83	70	83	70	83	-0.046	4.85	0
11	1.591	1.585	0.15	0.15	1.84	79	-1.06	1.32	78	-0.7	96	0.054	99	99	12.0	0	533	518	269	340	335	399	784	284	83	70	83	70	83	-0.045	5.02	0
12	1.739	1.730	0.15	0.15	1.83	78	-1.06	1.33	78	-0.7	96	0.054	99	99	11.9	-0.1	535	516	267	337	334	398	805	284	83	70	83	70	82	-0.047	5.54	0
13	1.888	1.874	0.15	0.14	1.83	78	-1.06	1.36	78	-0.7	96	0.054	99	99	11.9	0	537	514	266	335	332	397	821	285	83	70	83	70	82	-0.047	5.67	0
14	2.036	2.019	0.15	0.15	1.82	78	-1.06	1.37	77	-0.7	95	0.054	99	99	11.8	-0.1	540	512	265	333	331	396	831	284	83	70	83	70	83	-0.047	5.85	0
15	2.184	2.164	0.15	0.15	1.81	78	-1.07	1.38	79	-0.7	95	0.054	99	99	11.7	-0.1	542	510	264	332	330	396	847	288	83	71	83	70	81	-0.047	6.02	0
16	2.333	2.308	0.15	0.14	1.81	78	-1.05	1.36	78	-0.7	95	0.054	99	99	11.7	0	546	509	262	330	329	395	861	288	83	71	83	71	83	-0.047	5.95	0
17	2.481	2.452	0.15	0.14	1.80	78	-1.06	1.38	79	-0.8	95	0.054	99	98	11.6	-0.1	549	507	261	330	328	395	868	280	83	71	83	71	83	-0.047	5.9	0
18	2.629	2.596	0.15	0.14	1.79	78	-1.05	1.38	78	-0.8	96	0.054	99	99	11.5	-0.1	553	505	260	329	327	395	876	284	83	71	83	71	83	-0.048	5.96	0
19	2.778	2.741	0.15	0.15	1.79	78	-1.06	1.36	78	-0.8	95	0.054	99	99	11.5	0	556	503	259	328	326	394	886	284	83	71	83	71	83	-0.048	6.14	0
20	2.927	2.885	0.15	0.14	1.79	77	-1.05	1.35	76	-0.8	95	0.054	100	99	11.4	-0.1	561	502	258	328	326	395	896	284	83	71	83	71	82	-0.047	6.34	0
21	3.075	3.030	0.15	0.15	1.80	77	-1.05	1.35	76	-0.8	96	0.054	99	100	11.3	-0.1	565	500	257	327	325	395	903	287	83	71	83	71	83	-0.046	6.48	0
22	3.224	3.175	0.15	0.15	1.79	77	-1.03	1.34	77	-0.8	96	0.054	100	99	11.3	0	569	498	257	326	324	395	908	290	84	71	83	71	83	-0.047	6.74	0
23	3.371	3.319	0.15	0.14	1.79	77	-1.03	1.35	78	-0.8	95	0.054	98	99	11.2	-0.1	573	497	256	326	324	395	916	285	84	71	83	71	83	-0.046	6.97	0
24	3.519	3.463	0.15	0.14	1.79	77	-1.02	1.34	77	-0.8	95	0.054	99	99	11.1	-0.1	578	495	255	326	323	395	920	285	84	71	83	71	83	-0.046	6.99	0
25	3.667	3.608	0.15	0.15	1.79	77	-1.03	1.33	77	-0.8	95	0.054	99	99	11.1	0	582	494	255	325	323	396	921	287	84	71	83	71	82	-0.045	7.08	0
26	3.815	3.752	0.15	0.14	1.79	77	-1.02	1.32	77	-0.8	95	0.054	99	99	11.0	-0.1	586	492	254	325	323	396	920	282	84	71	83	71	82	-0.045	7.11	0
27	3.963	3.896	0.15	0.14	1.79	77	-1.03	1.31	76	-0.8	96	0.054	99	99	10.9	-0.1	590	491	254	324	324	397	917	285	84	72	83	71	84	-0.044	7.17	0
28	4.111	4.040	0.15	0.14	1.81	77	-1.03	1.31	76	-0.7	96	0.054	99	99	10.8	-0.1	593	489	253	325	324	397	915	283	84	72	83	71	83	-0.044	7.44	0
29	4.258	4.184	0.15	0.14	1.81	77	-1.02	1.31	77	-0.8	95	0.054	98	99	10.8	0	597	488	253	325	324	397	916	287	84	72	83	71	82	-0.044	7.58	0
30	4.406	4.328	0.15	0.14	1.81	77	-1.02	1.31	76	-0.8	95	0.054	99	99	10.7	-0.1	601	486	252	325	326	398	920	282	84	72	83	71	82	-0.043	8	0
31	4.554	4.473	0.15	0.15	1.80	77	-1.03	1.30	78	-0.8	95	0.054	99	99	10.6	-0.1	600	485	248	325	327	397	926	284	84	72	84	72	83	-0.043	8.02	0

Wood Heater Test Data - ASTM E2780 / ASTM E2515

Run: 1

Manufacturer: Valley Comfort
Model: 20.2 Series
Tracking No.: 2253
Project No.: 0142WS013E
Test Date: 22-Aug-17
Beginning Clock Time: 14.29

Total Sampling Time: 276 min
Recording Interval: 1 min
Background Sample Volume: 0 cubic feet

Meter Box Y Factor: 1.003 (1) 0.997 (2) N/A (Amb)

Barometric Pressure:	Begin	Middle	End	Average
	28.69	28.68	28.64	28.67 "Hg

OMNI Equipment Numbers: 464,410,132,576,318,432,419,371,372,432,296-T55,567,413,592

PM Control Modules: 371/372
Dilution Tunnel MW(dry): 29.00 lb/lb-mole
Dilution Tunnel MW(wet): 28.78 lb/lb-mole
Dilution Tunnel H2O: 2.00 percent
Dilution Tunnel Static: -0.170 "H2O
Tunnel Area: 0.19635 ft2
Pitot Tube Cp: 0.99

Avg. Tunnel Velocity: 14.87 ft/sec.
Initial Tunnel Flow: 155.5 scfm
Average Tunnel Flow: 156.6 scfm
Post-Test Leak Check (1): 0.000 cfm @ -15 in. Hg
Post-Test Leak Check (2): 0.000 cfm @ -17 in. Hg
Average Test Piece Fuel Moisture: 20.35 Dry Basis %

Technician Signature:

Velocity Traverse Data

	Pt.1	Pt.2	Pt.3	Pt.4	Pt.5	Pt.6	Pt.7	Pt.8	Center	
Initial dP	0.040	0.050	0.054	0.036	0.040	0.054	0.050	0.038	0.054	"H2O
Temp:	90	91	91	91	91	91	91	91	91	°F

V_{strav} 14.82 ft/sec V_{scent} 16.07 ft/sec F_p 0.922

	Particulate Sampling Data														Fuel Weight (lb)		Temperature Data (°F)													Stack Gas Data		
Elapsed Time (min)	Gas Meter 1 (ft^3)	Gas Meter 2 (ft^3)	Sample Rate 1 (cfm)	Sample Rate 2 (cfm)	Orifice dH 1 ("H_2O)	Meter 1 Temp (°F)	Meter 1 Vacuum ("Hg)	Orifice dH 2 ("H_2O)	Meter 2 Temp (°F)	Meter 2 Vacuum ("Hg)	Dilution Tunnel (°F)	Dilution Tunnel Center dP	Pro. Rate 1	Pro. Rate 2	Scale Reading	Weight Change	Firebox Top	Firebox Bottom	Firebox Back	Firebox Left	Firebox Right	Avg. Stove Surface	Catalyst Exit	Stack	Filter 1	Dryer Exit 1	Filter 2	Dryer Exit 2	Ambient	Draft ("H_2O)	CO_2 (%)	CO (%)
32	4.702	4.617	0.15	0.14	1.79	76	-1.03	1.28	75	-0.8	95	0.054	99	99	10.6	0	600	484	245	324	327	396	926	282	84	72	83	72	84	-0.043	8.12	0
33	4.850	4.762	0.15	0.15	1.79	76	-1.03	1.28	76	-0.8	95	0.054	99	100	10.5	-0.1	602	483	241	323	327	395	928	279	84	72	83	72	84	-0.044	7.94	0
34	4.998	4.906	0.15	0.14	1.80	76	-1.02	1.29	76	-0.8	95	0.054	99	99	10.4	-0.1	604	482	238	322	325	394	924	273	84	72	83	72	83	-0.043	7.85	0
35	5.146	5.050	0.15	0.14	1.78	76	-1.03	1.29	76	-0.8	96	0.054	99	99	10.4	0	605	482	236	321	324	394	925	280	84	72	84	72	84	-0.042	7.65	-0.01
36	5.294	5.194	0.15	0.14	1.76	76	-1.02	1.28	76	-0.8	96	0.054	99	99	10.3	-0.1	606	481	233	321	323	393	926	271	84	73	84	72	84	-0.040	7.53	-0.01
37	5.442	5.339	0.15	0.15	1.75	76	-1.02	1.30	77	-0.8	96	0.054	99	99	10.2	-0.1	607	480	230	320	322	392	922	275	84	73	84	72	84	-0.039	7.61	-0.01
38	5.590	5.483	0.15	0.14	1.76	76	-1.02	1.33	77	-0.8	95	0.054	99	99	10.2	0	607	480	229	318	321	391	921	270	84	73	84	72	84	-0.039	7.64	-0.01
39	5.739	5.628	0.15	0.15	1.76	76	-1.02	1.34	75	-0.8	95	0.054	100	100	10.1	-0.1	606	479	226	317	320	390	914	274	84	73	84	72	84	-0.038	7.54	-0.01
40	5.888	5.773	0.15	0.15	1.78	76	-1.02	1.35	76	-0.8	95	0.054	100	100	10.1	0	606	479	225	316	319	389	908	274	84	73	84	72	85	-0.040	7.42	-0.01
41	6.036	5.917	0.15	0.14	1.77	77	-1.03	1.34	78	-0.8	96	0.054	99	99	10.0	-0.1	605	478	223	316	319	388	905	274	84	73	84	73	85	-0.039	7.33	-0.01
42	6.185	6.062	0.15	0.15	1.80	76	-1.03	1.35	76	-0.8	95	0.054	100	100	10.0	0	604	477	222	315	319	387	904	273	84	73	84	73	85	-0.037	7.2	-0.01
43	6.333	6.206	0.15	0.14	1.79	77	-1.02	1.36	78	-0.8	96	0.054	99	99	9.9	-0.1	604	476	220	314	318	386	903	271	84	73	84	73	84	-0.038	7.13	-0.01
44	6.482	6.351	0.15	0.15	1.78	77	-1.03	1.34	77	-0.8	95	0.054	100	99	9.8	-0.1	603	475	219	314	317	386	901	275	84	74	84	73	85	-0.039	7.08	-0.01
45	6.630	6.496	0.15	0.15	1.78	77	-1.03	1.34	76	-0.7	96	0.054	99	100	9.8	0	602	474	217	313	317	385	909	278	84	74	84	73	85	-0.039	6.85	-0.01
46	6.778	6.641	0.15	0.15	1.80	77	-1.02	1.34	78	-0.7	96	0.054	99	99	9.7	-0.1	601	473	217	314	316	384	907	276	84	74	84	73	85	-0.038	6.61	-0.01
47	6.926	6.785	0.15	0.14	1.80	77	-1.02	1.34	77	-0.8	96	0.054	99	99	9.7	0	600	472	215	314	315	383	899	279	84	74	84	73	85	-0.037	6.51	-0.01
48	7.075	6.929	0.15	0.14	1.80	77	-1.02	1.34	76	-0.8	96	0.054	100	99	9.6	-0.1	598	471	214	315	314	382	892	276	84	74	84	73	84	-0.038	6.54	-0.01
49	7.223	7.074	0.15	0.15	1.79	77	-1.02	1.33	76	-0.7	96	0.054	99	100	9.6	0	596	470	213	316	313	382	888	278	84	74	84	73	85	-0.039	6.49	-0.01
50	7.372	7.219	0.15	0.15	1.78	77	-1.01	1.31	76	-0.7	96	0.054	100	100	9.5	-0.1	594	469	213	315	311	380	889	279	84	74	84	74	85	-0.040	6.45	-0.01
51	7.520	7.363	0.15	0.14	1.76	77	-1.02	1.31	76	-0.7	96	0.054	99	99	9.5	0	592	468	211	317	311	380	894	283	84	74	84	74	85	-0.040	6.5	-0.01
52	7.669	7.508	0.15	0.15	1.76	77	-1.02	1.30	77	-0.7	96	0.054	100	99	9.4	-0.1	592	467	211	317	310	379	905	279	84	75	84	74	85	-0.040	6.63	-0.01
53	7.818	7.652	0.15	0.14	1.75	77	-1.03	1.30	78	-0.7	96	0.054	100	99	9.4	0	592	467	210	316	309	379	917	283	85	75	84	74	85	-0.041	6.8	-0.01
54	7.967	7.797	0.15	0.15	1.77	77	-1.02	1.29	76	-0.7	96	0.054	100	100	9.3	-0.1	593	466	209	316	308	378	930	284	85	75	84	74	85	-0.041	6.1	-0.01
55	8.116	7.942	0.15	0.15	1.77	77	-1.03	1.29	78	-0.7	97	0.054	100	99	9.3	0	594	465	208	317	307	378	941	285	85	75	84	74	85	-0.041	6.18	-0.01
56	8.265	8.087	0.15	0.15	1.79	77	-1.03	1.30	77	-0.7	97	0.054	100	100	9.2	-0.1	596	464	208	317	306	378	948	288	85	75	84	74	85	-0.042	6.27	-0.01
57	8.414	8.232	0.15	0.15	1.79	77	-1.03	1.33	76	-0.7	97	0.054	100	100	9.2	0	597	463	207	319	305	378	938	288	85	75	84	74	85	-0.041	6.33	-0.01
58	8.563	8.377	0.15	0.15	1.79	77	-1.03	1.34	78	-0.7	97	0.054	100	99	9.1	-0.1	596	462	207	322	304	378	929	288	85	75	84	74	85	-0.041	6.54	-0.01
59	8.711	8.522	0.15	0.15	1.79	77	-1.04	1.33	77	-0.7	97	0.054	99	100	9.0	-0.1	596	462	207	324	303	378	929	289	85	75	85	75	85	-0.040	6.66	-0.01
60	8.859	8.667	0.15	0.15	1.79	77	-1.04	1.34	78	-0.7	97	0.054	99	99	9.0	0	595	461	207	327	303	379	933	299	85	75	85	75	85	-0.041	6.81	-0.01
61	9.010	8.812	0.15	0.15	1.82	77	-0.94	1.35	76	-0.7	98	0.054	101	100	8.9	-0.1	595	460	208	332	304	380	952	307	85	75	85	75	85	-0.042	9.71	0.52
62	9.159	8.956	0.15	0.14	1.76	77	-1.01	1.34	78	-0.7	98	0.054	100	99	8.7	-0.2	599	459	209	337	306	382	980	315	85	76	85	75	85	-0.043	9.92	0.49
63	9.308	9.102	0.15	0.15	1.76	77	-1	1.34	77	-0.8	98	0.054	100	100	8.6	-0.1	605	458	210	343	308	385	987	315	86	76	85	75	85	-0.040	9.8	0.37

Wood Heater Test Data - ASTM E2780 / ASTM E2515

Run: 1

Manufacturer: Valley Comfort
Model: 20.2 Series
Tracking No.: 2253
Project No.: 0142WS013E
Test Date: 22-Aug-17
Beginning Clock Time: 14.29

Total Sampling Time: 276 min
Recording Interval: 1 min
Background Sample Volume: 0 cubic feet

Meter Box Y Factor: 1.003 (1) 0.997 (2) N/A (Amb)

Barometric Pressure:	Begin	Middle	End	Average
	28.69	28.68	28.64	28.67 "Hg

OMNI Equipment Numbers: 464,410,132,576,318,432,419,371,372,432,296-T55,567,413,592

PM Control Modules: 371/372
Dilution Tunnel MW(dry): 29.00 lb/lb-mole
Dilution Tunnel MW(wet): 28.78 lb/lb-mole
Dilution Tunnel H2O: 2.00 percent
Dilution Tunnel Static: -0.170 "H2O
Tunnel Area: 0.19635 ft2
Pitot Tube Cp: 0.99

Avg. Tunnel Velocity: 14.87 ft/sec.
Initial Tunnel Flow: 155.5 scfm
Average Tunnel Flow: 156.6 scfm
Post-Test Leak Check (1): 0.000 cfm @ -15 in. Hg
Post-Test Leak Check (2): 0.000 cfm @ -17 in. Hg
Average Test Piece Fuel Moisture: 20.35 Dry Basis %

Technician Signature:

Velocity Traverse Data

	Pt.1	Pt.2	Pt.3	Pt.4	Pt.5	Pt.6	Pt.7	Pt.8	Center	
Initial dP	0.040	0.050	0.054	0.036	0.040	0.054	0.050	0.038	0.054	"H2O
Temp:	90	91	91	91	91	91	91	91	91	°F

V_{strav} 14.82 ft/sec V_{scent} 16.07 ft/sec F_p 0.922

	Particulate Sampling Data														Fuel Weight (lb)		Temperature Data (°F)													Stack Gas Data		
Elapsed Time (min)	Gas Meter 1 (ft^3)	Gas Meter 2 (ft^3)	Sample Rate 1 (cfm)	Sample Rate 2 (cfm)	Orifice dH 1 ("H_2O)	Meter 1 Temp (°F)	Meter 1 Vacuum ("Hg)	Orifice dH 2 ("H_2O)	Meter 2 Temp (°F)	Meter 2 Vacuum ("Hg)	Dilution Tunnel (°F)	Dilution Tunnel Center dP	Pro. Rate 1	Pro. Rate 2	Scale Reading	Weight Change	Firebox Top	Firebox Bottom	Firebox Back	Firebox Left	Firebox Right	Avg. Stove Surface	Catalyst Exit	Stack	Filter 1	Dryer Exit 1	Filter 2	Dryer Exit 2	Ambient	Draft ("H_2O)	CO_2 (%)	CO (%)
64	9.458	9.247	0.15	0.15	1.75	77	-1	1.34	78	-0.7	99	0.054	101	100	8.5	-0.1	611	457	211	349	311	388	995	322	86	76	85	75	85	-0.040	9.67	0.4
65	9.608	9.391	0.15	0.14	1.78	77	-1	1.33	77	-0.8	99	0.054	101	99	8.4	-0.1	618	457	212	355	314	391	1005	322	86	76	85	75	85	-0.043	9.45	0.32
66	9.757	9.536	0.15	0.15	1.78	77	-1.01	1.33	78	-0.8	99	0.054	100	100	8.3	-0.1	624	456	213	362	316	394	1010	320	86	76	85	75	85	-0.040	9.34	0.26
67	9.906	9.681	0.15	0.15	1.79	77	-1.01	1.32	76	-0.7	99	0.054	100	100	8.2	-0.1	631	455	214	367	319	397	1023	322	86	76	85	75	85	-0.040	9.37	0.14
68	10.055	9.825	0.15	0.14	1.79	77	-1.01	1.31	78	-0.7	99	0.054	100	99	8.1	-0.1	637	454	216	372	322	400	1035	322	86	76	85	75	85	-0.039	9.2	0.13
69	10.204	9.970	0.15	0.15	1.80	77	-1.01	1.30	77	-0.8	99	0.054	100	100	8.0	-0.1	643	452	216	376	325	402	1039	318	86	76	85	75	85	-0.038	9.12	0.1
70	10.353	10.115	0.15	0.15	1.80	77	-1.01	1.29	78	-0.8	99	0.054	100	100	7.9	-0.1	649	452	218	379	327	405	1042	321	86	76	85	75	85	-0.037	9.13	0.08
71	10.502	10.260	0.15	0.15	1.79	77	-1.01	1.29	78	-0.7	99	0.054	100	100	7.8	-0.1	653	451	219	381	330	407	1043	321	86	76	85	76	85	-0.038	8.97	0.07
72	10.651	10.405	0.15	0.15	1.77	77	-1	1.28	78	-0.7	99	0.054	100	100	7.8	0	658	450	221	383	333	409	1045	321	86	77	85	76	85	-0.040	9.38	0.38
73	10.800	10.550	0.15	0.15	1.77	77	-1.01	1.30	76	-0.7	99	0.054	100	100	7.7	-0.1	662	449	223	384	335	411	1045	324	86	77	85	76	85	-0.040	9.13	0.4
74	10.950	10.696	0.15	0.15	1.75	77	-1.01	1.33	76	-0.7	99	0.054	101	101	7.6	-0.1	666	448	224	385	337	412	1049	320	86	77	85	76	85	-0.040	8.93	0.11
75	11.100	10.841	0.15	0.15	1.77	77	-1.01	1.34	77	-0.7	99	0.054	101	100	7.5	-0.1	670	447	226	384	339	413	1055	316	86	77	85	76	85	-0.039	8.73	0.07
76	11.249	10.986	0.15	0.15	1.79	77	-1.01	1.35	77	-0.7	99	0.054	100	100	7.4	-0.1	674	446	229	384	341	415	1055	315	86	77	85	76	85	-0.040	8.78	0.12
77	11.399	11.131	0.15	0.15	1.79	77	-1.01	1.35	78	-0.7	99	0.054	101	100	7.4	0	676	445	230	384	343	416	1049	310	86	77	85	76	85	-0.040	8.67	0.1
78	11.548	11.277	0.15	0.15	1.78	77	-1.01	1.34	76	-0.8	99	0.054	100	101	7.3	-0.1	679	443	232	383	344	416	1044	307	86	77	85	76	86	-0.040	8.77	0.12
79	11.697	11.423	0.15	0.15	1.80	78	-1.01	1.33	77	-0.8	98	0.054	100	100	7.2	-0.1	679	442	234	383	346	417	1040	303	86	77	85	76	86	-0.039	8.87	0.1
80	11.846	11.567	0.15	0.14	1.80	78	-1.01	1.33	77	-0.8	98	0.054	100	99	7.1	-0.1	680	441	236	384	347	418	1035	301	86	77	85	76	86	-0.041	8.86	0.08
81	11.996	11.713	0.15	0.15	1.79	78	-1.01	1.31	79	-0.8	98	0.054	100	100	7.0	-0.1	681	440	238	384	348	418	1038	294	86	77	85	76	85	-0.038	8.86	0.09
82	12.145	11.858	0.15	0.15	1.77	78	-1	1.31	79	-0.8	98	0.054	100	99	6.9	-0.1	682	439	239	383	349	418	1040	289	86	77	85	76	85	-0.041	9.11	0.07
83	12.294	12.003	0.15	0.15	1.75	78	-1.01	1.31	79	-0.8	98	0.054	100	99	6.9	0	684	438	240	384	349	419	1041	288	86	77	85	77	86	-0.039	9.09	0.07
84	12.445	12.148	0.15	0.15	1.75	78	-1	1.30	79	-0.7	96	0.054	101	99	6.8	-0.1	685	437	242	384	349	419	1040	285	86	78	85	77	85	-0.037	9.05	0.05
85	12.594	12.294	0.15	0.15	1.79	78	-1	1.28	77	-0.7	96	0.054	99	100	6.7	-0.1	686	436	243	384	349	420	1034	280	86	78	85	77	85	-0.036	8.86	0.07
86	12.744	12.440	0.15	0.15	1.80	78	-1.01	1.32	78	-0.7	96	0.054	100	100	6.7	0	686	435	244	384	350	420	1026	279	86	78	86	77	86	-0.032	8.89	0.04
87	12.894	12.586	0.15	0.15	1.81	78	-1.01	1.34	77	-0.7	97	0.054	100	100	6.6	-0.1	685	435	245	385	350	420	1018	274	86	78	86	77	86	-0.030	8.66	0.04
88	13.043	12.731	0.15	0.15	1.81	78	-1.01	1.36	78	-0.8	95	0.054	99	99	6.6	0	683	434	247	384	351	420	1012	271	86	78	85	77	87	-0.030	8.68	0.03
89	13.193	12.877	0.15	0.15	1.80	78	-1.02	1.36	79	-0.8	95	0.054	100	100	6.5	-0.1	682	433	248	385	351	420	1007	267	86	78	85	77	86	-0.030	8.72	0.03
90	13.342	13.023	0.15	0.15	1.79	78	-1.01	1.34	77	-0.8	95	0.054	99	100	6.5	0	680	432	248	385	352	419	1004	266	86	78	85	77	86	-0.031	8.58	0.02
91	13.491	13.169	0.15	0.15	1.78	78	-1.02	1.34	77	-0.7	95	0.054	99	100	6.4	-0.1	679	432	249	385	352	419	1000	269	86	78	85	77	85	-0.031	8.43	0.02
92	13.642	13.314	0.15	0.15	1.76	78	-1.02	1.32	78	-0.8	95	0.054	101	99	6.4	0	677	431	249	385	353	419	995	264	86	78	85	77	86	-0.031	8.48	0.02
93	13.792	13.460	0.15	0.15	1.79	78	-1.01	1.31	79	-0.8	95	0.054	100	100	6.3	-0.1	674	431	250	385	353	419	989	264	86	78	85	77	86	-0.032	8.41	0
94	13.942	13.605	0.15	0.15	1.80	78	-1.01	1.29	77	-0.8	95	0.054	100	99	6.2	-0.1	672	430	250	386	353	418	976	260	86	78	85	77	86	-0.034	8.14	0
95	14.092	13.751	0.15	0.15	1.79	78	-1.01	1.29	79	-0.7	95	0.054	100	100	6.2	0	669	430	251	386	355	418	967	259	86	79	85	78	87	-0.033	8.19	0

Wood Heater Test Data - ASTM E2780 / ASTM E2515

Run: 1

Manufacturer: Valley Comfort
Model: 20.2 Series
Tracking No.: 2253
Project No.: 0142WS013E
Test Date: 22-Aug-17
Beginning Clock Time: 14.29

Total Sampling Time: 276 min
Recording Interval: 1 min
Background Sample Volume: 0 cubic feet

Meter Box Y Factor: 1.003 (1) 0.997 (2) N/A (Amb)

Barometric Pressure:	Begin	Middle	End	Average
	28.69	28.68	28.64	28.67 "Hg

OMNI Equipment Numbers: 464,410,132,576,318,432,419,371,372,432,296-T55,567,413,592

PM Control Modules: 371/372
Dilution Tunnel MW(dry): 29.00 lb/lb-mole
Dilution Tunnel MW(wet): 28.78 lb/lb-mole
Dilution Tunnel H2O: 2.00 percent
Dilution Tunnel Static: -0.170 "H2O
Tunnel Area: 0.19635 ft2
Pitot Tube Cp: 0.99

Avg. Tunnel Velocity: 14.87 ft/sec.
Initial Tunnel Flow: 155.5 scfm
Average Tunnel Flow: 156.6 scfm
Post-Test Leak Check (1): 0.000 cfm @ -15 in. Hg
Post-Test Leak Check (2): 0.000 cfm @ -17 in. Hg
Average Test Piece Fuel Moisture: 20.35 Dry Basis %

Technician Signature:

Velocity Traverse Data

	Pt.1	Pt.2	Pt.3	Pt.4	Pt.5	Pt.6	Pt.7	Pt.8	Center	
Initial dP	0.040	0.050	0.054	0.036	0.040	0.054	0.050	0.038	0.054	"H2O
Temp:	90	91	91	91	91	91	91	91	91	°F

V_{strav} 14.82 ft/sec V_{scent} 16.07 ft/sec F_p 0.922

	Particulate Sampling Data														Fuel Weight (lb)		Temperature Data (°F)													Stack Gas Data		
Elapsed Time (min)	Gas Meter 1 (ft^3)	Gas Meter 2 (ft^3)	Sample Rate 1 (cfm)	Sample Rate 2 (cfm)	Orifice dH 1 ("H_2O)	Meter 1 Temp (°F)	Meter 1 Vacuum ("Hg)	Orifice dH 2 ("H_2O)	Meter 2 Temp (°F)	Meter 2 Vacuum ("Hg)	Dilution Tunnel (°F)	Dilution Tunnel Center dP	Pro. Rate 1	Pro. Rate 2	Scale Reading	Weight Change	Firebox Top	Firebox Bottom	Firebox Back	Firebox Left	Firebox Right	Avg. Stove Surface	Catalyst Exit	Stack	Filter 1	Dryer Exit 1	Filter 2	Dryer Exit 2	Ambient	Draft ("H_2O)	CO_2 (%)	CO (%)
96	14.242	13.897	0.15	0.15	1.81	78	-1.01	1.30	79	-0.7	95	0.054	100	100	6.1	-0.1	666	429	252	387	355	418	961	260	86	79	85	78	86	-0.030	8.4	0
97	14.392	14.044	0.15	0.15	1.75	78	-1.02	1.34	77	-0.7	95	0.054	100	101	6.1	0	662	429	253	387	355	417	961	257	86	79	85	78	87	-0.028	8.38	0
98	14.541	14.190	0.15	0.15	1.57	78	-1.01	1.36	78	-0.8	95	0.054	99	100	6.0	-0.1	660	428	253	388	356	417	961	257	86	79	85	78	87	-0.029	8.49	0
99	14.690	14.336	0.15	0.15	1.33	78	-1	1.35	77	-0.8	95	0.054	99	100	6.0	0	657	428	254	387	356	416	963	253	86	79	85	78	86	-0.029	8.57	0.01
100	14.841	14.482	0.15	0.15	1.76	78	-1	1.34	79	-0.8	95	0.054	101	100	5.9	-0.1	656	427	254	388	356	416	968	255	86	79	85	78	86	-0.031	8.64	0.01
101	14.991	14.627	0.15	0.15	1.80	78	-1	1.34	78	-0.8	94	0.054	100	99	5.8	-0.1	656	427	254	388	357	416	975	259	85	79	85	78	86	-0.031	9.01	0.07
102	15.141	14.773	0.15	0.15	1.79	78	-1.01	1.33	79	-0.8	94	0.054	100	100	5.8	0	656	427	255	387	358	417	980	259	86	79	85	78	86	-0.030	8.99	0.07
103	15.291	14.918	0.15	0.15	1.78	78	-1.01	1.32	77	-0.8	94	0.054	100	99	5.7	-0.1	656	426	255	386	358	416	984	257	86	79	85	78	86	-0.031	9.03	0.04
104	15.441	15.064	0.15	0.15	1.80	78	-1	1.29	77	-0.8	94	0.054	100	100	5.7	0	657	426	256	386	358	417	986	256	86	79	85	78	86	-0.031	8.86	0.05
105	15.591	15.210	0.15	0.15	1.55	78	-1.01	1.30	78	-0.8	94	0.054	100	100	5.6	-0.1	658	426	256	386	359	417	989	256	86	79	85	78	86	-0.030	9.01	0.06
106	15.742	15.356	0.15	0.15	2.18	78	-1.41	1.33	77	-0.8	94	0.054	101	100	5.6	0	658	426	256	385	360	417	989	259	86	79	85	78	87	-0.032	9.13	0.1
107	15.896	15.503	0.15	0.15	1.83	78	-1.05	1.34	77	-0.8	95	0.054	103	101	5.5	-0.1	658	425	256	386	361	417	991	259	86	79	85	78	86	-0.031	9.2	0.15
108	16.047	15.649	0.15	0.15	1.74	78	-1.01	1.35	77	-0.8	95	0.054	101	100	5.4	-0.1	659	426	257	385	361	418	996	256	86	78	85	77	86	-0.028	9.43	0.27
109	16.197	15.795	0.15	0.15	1.26	78	-1.01	1.34	77	-0.8	94	0.054	100	100	5.3	-0.1	661	426	257	385	362	418	1000	257	86	78	85	77	86	-0.028	9.45	0.45
110	16.347	15.942	0.15	0.15	0.76	78	-1.01	1.34	77	-0.8	94	0.054	100	101	5.3	0	662	426	257	384	363	418	1000	257	86	78	85	76	86	-0.028	9.63	0.79
111	16.497	16.087	0.15	0.15	1.80	78	-1.02	1.32	79	-0.8	95	0.054	100	99	5.2	-0.1	663	426	258	385	364	419	993	261	86	77	85	76	87	-0.029	9.55	1.05
112	16.647	16.233	0.15	0.15	1.80	78	-1.02	1.31	77	-0.8	95	0.054	100	100	5.1	-0.1	664	426	258	384	365	419	987	261	86	77	85	76	87	-0.029	9.46	1.37
113	16.796	16.379	0.15	0.15	1.77	78	-1.02	1.31	77	-0.8	95	0.054	99	100	5.0	-0.1	666	426	258	383	366	420	986	264	86	77	85	76	86	-0.028	9.57	1.61
114	16.948	16.525	0.15	0.15	1.78	78	-1.02	1.28	79	-0.8	95	0.054	101	100	5.0	0	668	425	259	383	367	420	979	264	86	77	85	75	86	-0.030	9.5	1.68
115	17.098	16.672	0.15	0.15	1.26	78	-1.02	1.33	77	-0.8	95	0.054	100	101	4.9	-0.1	669	425	260	383	368	421	974	265	86	77	85	75	87	-0.030	9.41	1.66
116	17.248	16.819	0.15	0.15	0.82	78	-1.03	1.35	79	-0.8	95	0.054	100	100	4.8	-0.1	669	425	261	381	370	421	967	267	86	76	85	75	87	-0.028	9.42	1.69
117	17.398	16.965	0.15	0.15	1.81	78	-1.02	1.35	77	-0.8	95	0.054	100	100	4.7	-0.1	669	424	262	381	372	422	963	264	86	76	86	75	87	-0.027	9.44	1.69
118	17.548	17.112	0.15	0.15	1.80	78	-1.03	1.34	77	-0.8	95	0.054	100	101	4.6	-0.1	669	424	262	381	374	422	960	265	86	76	86	75	86	-0.025	9.4	1.66
119	17.698	17.258	0.15	0.15	1.80	78	-1.02	1.34	77	-0.8	95	0.054	100	100	4.6	0	669	424	263	381	376	423	958	260	86	76	86	75	86	-0.026	9.42	1.6
120	17.848	17.404	0.15	0.15	1.77	78	-1.02	1.32	77	-0.8	95	0.054	100	100	4.5	-0.1	668	423	263	380	377	422	959	261	86	76	85	75	87	-0.024	9.42	1.6
121	17.999	17.550	0.15	0.15	1.77	78	-1.02	1.31	77	-0.8	95	0.054	101	100	4.4	-0.1	669	423	265	381	378	423	962	259	86	76	86	75	87	-0.025	9.48	1.56
122	18.149	17.697	0.15	0.15	1.80	78	-1.02	1.31	77	-0.8	95	0.054	100	101	4.3	-0.1	670	423	265	381	378	423	969	260	86	76	86	75	86	-0.027	9.51	1.48
123	18.300	17.844	0.15	0.15	1.80	78	-1.03	1.34	76	-0.8	95	0.054	101	101	4.3	0	671	423	266	381	378	424	979	256	86	76	86	75	86	-0.024	9.43	1.49
124	18.450	17.991	0.15	0.15	1.81	78	-1.02	1.36	76	-0.8	95	0.054	100	101	4.2	-0.1	673	424	267	382	378	425	986	261	86	75	86	75	87	-0.025	9.46	1.52
125	18.600	18.137	0.15	0.15	1.80	78	-1.02	1.35	76	-0.8	95	0.054	100	100	4.1	-0.1	673	424	268	381	379	425	984	257	86	75	86	74	87	-0.024	9.33	1.49
126	18.750	18.284	0.15	0.15	1.79	78	-1.02	1.34	76	-0.8	95	0.054	100	101	4.0	-0.1	674	424	270	382	379	426	980	257	86	75	86	74	87	-0.023	9.35	1.54
127	18.900	18.430	0.15	0.15	1.77	78	-1.02	1.33	76	-0.8	95	0.054	100	100	4.0	0	673	425	271	382	380	426	977	259	86	75	86	74	87	-0.023	9.31	1.56

Wood Heater Test Data - ASTM E2780 / ASTM E2515

Run: 1

Manufacturer: Valley Comfort
Model: 20.2 Series
Tracking No.: 2253
Project No.: 0142WS013E
Test Date: 22-Aug-17
Beginning Clock Time: 14.29

Total Sampling Time: 276 min
Recording Interval: 1 min
Background Sample Volume: 0 cubic feet

Meter Box Y Factor: 1.003 (1) 0.997 (2) N/A (Amb)

Barometric Pressure:	Begin	Middle	End	Average
	28.69	28.68	28.64	28.67 "Hg

OMNI Equipment Numbers: 464,410,132,576,318,432,419,371,372,432,296-T55,567,413,592

PM Control Modules: 371/372
Dilution Tunnel MW(dry): 29.00 lb/lb-mole
Dilution Tunnel MW(wet): 28.78 lb/lb-mole
Dilution Tunnel H2O: 2.00 percent
Dilution Tunnel Static: -0.170 "H2O
Tunnel Area: 0.19635 ft2
Pitot Tube Cp: 0.99

Avg. Tunnel Velocity: 14.87 ft/sec.
Initial Tunnel Flow: 155.5 scfm
Average Tunnel Flow: 156.6 scfm
Post-Test Leak Check (1): 0.000 cfm @ -15 in. Hg
Post-Test Leak Check (2): 0.000 cfm @ -17 in. Hg
Average Test Piece Fuel Moisture: 20.35 Dry Basis %

Technician Signature:

Velocity Traverse Data

	Pt.1	Pt.2	Pt.3	Pt.4	Pt.5	Pt.6	Pt.7	Pt.8	Center	
Initial dP	0.040	0.050	0.054	0.036	0.040	0.054	0.050	0.038	0.054	"H2O
Temp:	90	91	91	91	91	91	91	91	91	°F

V_{strav} 14.82 ft/sec V_{scent} 16.07 ft/sec F_p 0.922

	Particulate Sampling Data														Fuel Weight (lb)		Temperature Data (°F)													Stack Gas Data		
Elapsed Time (min)	Gas Meter 1 (ft^3)	Gas Meter 2 (ft^3)	Sample Rate 1 (cfm)	Sample Rate 2 (cfm)	Orifice dH 1 ("H_2O)	Meter 1 Temp (°F)	Meter 1 Vacuum ("Hg)	Orifice dH 2 ("H_2O)	Meter 2 Temp (°F)	Meter 2 Vacuum ("Hg)	Dilution Tunnel (°F)	Dilution Tunnel Center dP	Pro. Rate 1	Pro. Rate 2	Scale Reading	Weight Change	Firebox Top	Firebox Bottom	Firebox Back	Firebox Left	Firebox Right	Avg. Stove Surface	Catalyst Exit	Stack	Filter 1	Dryer Exit 1	Filter 2	Dryer Exit 2	Ambient	Draft ("H_2O)	CO_2 (%)	CO (%)
128	19.051	18.576	0.15	0.15	1.77	78	-1.01	1.31	76	-0.8	95	0.054	101	100	3.9	-0.1	673	425	272	382	380	426	975	255	86	75	86	74	87	-0.026	9.31	1.38
129	19.202	18.723	0.15	0.15	1.80	78	-1.02	1.28	76	-0.8	95	0.054	101	101	3.8	-0.1	672	425	273	383	380	427	980	257	86	75	86	74	86	-0.025	9.48	1.13
130	19.352	18.870	0.15	0.15	1.80	78	-1.02	1.33	76	-0.8	94	0.054	100	101	3.8	0	672	425	275	384	381	427	987	256	86	75	86	74	87	-0.023	9.18	0.97
131	19.502	19.017	0.15	0.15	1.80	78	-1.01	1.33	76	-0.8	94	0.054	100	101	3.7	-0.1	670	426	276	386	382	428	971	252	86	75	86	74	87	-0.023	9.35	0.96
132	19.652	19.164	0.15	0.15	1.80	78	-1.01	1.36	76	-0.8	94	0.054	100	101	3.6	-0.1	667	426	276	387	383	428	951	247	86	75	86	74	87	-0.026	9.3	0.51
133	19.802	19.311	0.15	0.15	1.78	78	-1.02	1.34	77	-0.8	94	0.054	100	101	3.6	0	665	426	278	389	385	429	952	247	86	75	86	74	87	-0.024	9.41	0.33
134	19.952	19.458	0.15	0.15	1.77	78	-1.03	1.33	77	-0.8	94	0.054	100	101	3.6	0	663	426	279	391	385	429	956	243	86	75	86	74	87	-0.024	9.36	0.21
135	20.104	19.604	0.15	0.15	1.77	78	-1.02	1.31	76	-0.8	94	0.054	101	100	3.5	-0.1	661	426	280	392	386	429	954	245	86	75	86	74	87	-0.024	9.1	0.18
136	20.254	19.751	0.15	0.15	1.80	78	-1.02	1.28	76	-0.8	94	0.054	100	101	3.5	0	658	427	281	392	386	429	944	243	86	74	86	74	87	-0.021	8.8	0.08
137	20.405	19.898	0.15	0.15	1.73	78	-1.02	1.31	77	-0.8	94	0.054	101	101	3.4	-0.1	654	427	282	392	386	428	929	238	86	74	86	74	87	-0.021	8.46	0.04
138	20.555	20.046	0.15	0.15	1.13	78	-1.02	1.34	77	-0.8	94	0.054	100	101	3.4	0	649	427	282	392	386	427	915	237	86	74	86	74	87	-0.018	8.62	0
139	20.705	20.193	0.15	0.15	1.38	78	-1.02	1.35	77	-0.8	94	0.054	100	101	3.3	-0.1	644	428	282	392	386	426	899	237	86	74	86	74	87	-0.018	8.19	0
140	20.855	20.340	0.15	0.15	0.83	78	-1.02	1.34	77	-0.8	94	0.054	100	101	3.3	0	639	428	283	391	385	425	884	236	86	74	86	74	87	-0.017	8.3	0
141	21.006	20.487	0.15	0.15	1.77	78	-1.01	1.32	77	-0.8	94	0.054	101	101	3.3	0	633	428	284	391	384	424	871	231	86	74	86	74	86	-0.016	8.16	-0.01
142	21.157	20.633	0.15	0.15	1.79	78	-1.02	1.30	77	-0.8	93	0.054	101	100	3.2	-0.1	628	429	285	391	383	423	862	234	86	74	86	74	86	-0.021	8.06	-0.01
143	21.308	20.780	0.15	0.15	1.80	78	-1.01	1.30	77	-0.8	93	0.054	101	101	3.2	0	622	429	285	391	382	422	854	233	86	74	86	74	87	-0.020	8	-0.01
144	21.458	20.928	0.15	0.15	1.80	78	-1.02	1.33	77	-0.8	93	0.054	100	101	3.2	0	617	429	285	390	381	420	848	228	86	74	86	74	87	-0.017	8.02	-0.01
145	21.608	21.075	0.15	0.15	1.81	78	-1.02	1.36	77	-0.8	93	0.054	100	101	3.2	0	612	430	286	389	381	420	842	225	86	74	86	74	87	-0.016	7.98	-0.01
146	21.759	21.223	0.15	0.15	1.80	78	-1.03	1.34	77	-0.8	93	0.054	101	101	3.1	-0.1	607	430	286	388	380	418	836	227	86	74	86	74	87	-0.016	8	-0.01
147	21.909	21.370	0.15	0.15	1.77	78	-1.02	1.33	77	-0.8	93	0.054	100	101	3.1	0	602	430	287	387	379	417	832	228	86	74	86	74	85	-0.019	8.07	-0.01
148	22.060	21.517	0.15	0.15	1.76	78	-1.02	1.31	77	-0.8	93	0.054	101	101	3.1	0	598	431	287	387	379	416	828	227	86	74	86	74	86	-0.020	7.95	-0.01
149	22.211	21.664	0.15	0.15	1.81	78	-1.02	1.30	77	-0.8	93	0.054	101	101	3.0	-0.1	594	431	287	386	378	415	824	224	86	74	86	74	86	-0.018	8.05	-0.01
150	22.362	21.811	0.15	0.15	1.79	78	-1.02	1.31	77	-0.8	93	0.054	101	101	3.0	0	590	431	288	386	377	414	820	225	86	74	86	74	87	-0.017	8.05	-0.01
151	22.512	21.959	0.15	0.15	1.81	78	-1.03	1.35	77	-0.8	93	0.054	100	101	3.0	0	586	432	288	386	377	414	817	223	86	74	86	74	86	-0.019	7.92	-0.01
152	22.663	22.106	0.15	0.15	1.81	78	-1.03	1.34	77	-0.8	93	0.054	101	101	2.9	-0.1	582	432	288	385	376	413	814	225	86	74	86	74	86	-0.017	8.18	-0.01
153	22.813	22.253	0.15	0.15	1.79	78	-1.02	1.34	77	-0.8	93	0.054	100	101	2.9	0	579	432	289	386	376	412	813	225	86	74	86	74	86	-0.017	8.09	-0.01
154	22.963	22.400	0.15	0.15	1.77	78	-1.01	1.32	77	-0.8	93	0.054	100	101	2.9	0	577	433	289	385	376	412	811	228	86	74	86	74	86	-0.018	8.37	-0.01
155	23.115	22.547	0.15	0.15	1.78	78	-1.02	1.31	78	-0.8	93	0.054	101	100	2.8	-0.1	574	433	289	385	376	411	811	229	86	74	86	74	86	-0.017	8.53	-0.01
156	23.265	22.694	0.15	0.15	1.81	78	-1.02	1.31	78	-0.8	93	0.054	100	100	2.8	0	571	434	290	385	376	411	811	229	86	74	86	74	86	-0.018	8.63	-0.01
157	23.416	22.842	0.15	0.15	1.81	78	-1.02	1.35	78	-0.8	93	0.054	101	101	2.7	-0.1	569	434	290	386	377	411	812	228	86	74	86	74	85	-0.020	8.73	-0.01
158	23.566	22.990	0.15	0.15	1.81	78	-1.02	1.35	78	-0.8	93	0.054	100	101	2.7	0	568	435	291	385	377	411	816	227	86	73	86	74	86	-0.021	8.9	-0.01
159	23.717	23.137	0.15	0.15	1.80	78	-1.02	1.34	78	-0.8	93	0.054	101	100	2.7	0	566	435	292	386	378	411	820	228	86	73	86	74	86	-0.022	8.97	-0.01

Wood Heater Test Data - ASTM E2780 / ASTM E2515

Run: 1

Manufacturer: Valley Comfort
Model: 20.2 Series
Tracking No.: 2253
Project No.: 0142WS013E
Test Date: 22-Aug-17
Beginning Clock Time: 14.29

Total Sampling Time: 276 min
Recording Interval: 1 min
Background Sample Volume: 0 cubic feet

Meter Box Y Factor: 1.003 (1) 0.997 (2) N/A (Amb)

Barometric Pressure:	Begin	Middle	End	Average
	28.69	28.68	28.64	28.67 "Hg

OMNI Equipment Numbers: 464,410,132,576,318,432,419,371,372,432,296-T55,567,413,592

PM Control Modules: 371/372
Dilution Tunnel MW(dry): 29.00 lb/lb-mole
Dilution Tunnel MW(wet): 28.78 lb/lb-mole
Dilution Tunnel H2O: 2.00 percent
Dilution Tunnel Static: -0.170 "H2O
Tunnel Area: 0.19635 ft2
Pitot Tube Cp: 0.99

Avg. Tunnel Velocity: 14.87 ft/sec.
Initial Tunnel Flow: 155.5 scfm
Average Tunnel Flow: 156.6 scfm
Post-Test Leak Check (1): 0.000 cfm @ -15 in. Hg
Post-Test Leak Check (2): 0.000 cfm @ -17 in. Hg
Average Test Piece Fuel Moisture: 20.35 Dry Basis %

Technician Signature:

Velocity Traverse Data

	Pt.1	Pt.2	Pt.3	Pt.4	Pt.5	Pt.6	Pt.7	Pt.8	Center	
Initial dP	0.040	0.050	0.054	0.036	0.040	0.054	0.050	0.038	0.054	"H2O
Temp:	90	91	91	91	91	91	91	91	91	°F

V_{strav} 14.82 ft/sec V_{scent} 16.07 ft/sec F_p 0.922

	Particulate Sampling Data														Fuel Weight (lb)		Temperature Data (°F)													Stack Gas Data		
Elapsed Time (min)	Gas Meter 1 (ft^3)	Gas Meter 2 (ft^3)	Sample Rate 1 (cfm)	Sample Rate 2 (cfm)	Orifice dH 1 ("H_2O)	Meter 1 Temp (°F)	Meter 1 Vacuum ("Hg)	Orifice dH 2 ("H_2O)	Meter 2 Temp (°F)	Meter 2 Vacuum ("Hg)	Dilution Tunnel (°F)	Dilution Tunnel Center dP	Pro. Rate 1	Pro. Rate 2	Scale Reading	Weight Change	Firebox Top	Firebox Bottom	Firebox Back	Firebox Left	Firebox Right	Avg. Stove Surface	Catalyst Exit	Stack	Filter 1	Dryer Exit 1	Filter 2	Dryer Exit 2	Ambient	Draft ("H_2O)	CO_2 (%)	CO (%)
160	23.867	23.284	0.15	0.15	1.77	78	-1.03	1.32	78	-0.8	93	0.054	100	100	2.6	-0.1	565	435	293	387	378	412	823	232	86	73	86	74	86	-0.023	8.87	-0.01
161	24.019	23.431	0.15	0.15	1.79	78	-1.01	1.31	78	-0.8	93	0.054	101	100	2.6	0	565	436	294	387	379	412	825	232	86	73	86	73	86	-0.023	8.78	-0.01
162	24.169	23.579	0.15	0.15	1.81	78	-1.02	1.31	78	-0.8	93	0.054	100	101	2.6	0	564	436	295	388	379	412	824	232	86	73	85	73	86	-0.023	8.92	-0.01
163	24.320	23.727	0.15	0.15	1.80	78	-1.02	1.35	78	-0.8	93	0.054	101	101	2.5	-0.1	564	436	296	388	380	413	821	234	86	73	85	73	86	-0.023	8.95	-0.01
164	24.470	23.874	0.15	0.15	1.81	78	-1.02	1.34	78	-0.8	93	0.054	100	100	2.5	0	563	437	297	388	381	413	818	231	86	73	86	73	86	-0.023	8.78	-0.01
165	24.621	24.022	0.15	0.15	1.81	78	-1.02	1.34	78	-0.8	93	0.054	101	101	2.5	0	562	438	298	389	381	414	814	231	86	73	85	73	86	-0.022	8.54	-0.01
166	24.771	24.169	0.15	0.15	1.78	78	-1.02	1.32	78	-0.8	92	0.054	100	100	2.4	-0.1	561	438	299	389	381	414	810	229	86	73	85	73	86	-0.023	8.3	-0.01
167	24.923	24.317	0.15	0.15	1.77	78	-1.02	1.31	78	-0.8	93	0.054	101	101	2.4	0	559	439	300	389	381	414	807	229	85	73	85	73	86	-0.023	8.09	-0.01
168	25.074	24.464	0.15	0.15	1.81	78	-1.02	1.31	78	-0.8	93	0.054	101	100	2.4	0	558	440	301	389	381	414	802	234	85	73	85	73	87	-0.022	7.88	-0.01
169	25.225	24.612	0.15	0.15	1.81	78	-1.03	1.35	78	-0.8	93	0.054	101	101	2.3	-0.1	556	440	301	388	381	413	795	227	85	73	85	73	86	-0.022	7.73	-0.01
170	25.375	24.760	0.15	0.15	1.82	78	-1.02	1.34	78	-0.8	92	0.054	100	101	2.3	0	554	440	302	388	380	413	787	229	85	73	85	73	86	-0.023	7.8	-0.01
171	25.526	24.907	0.15	0.15	1.81	78	-1.02	1.33	78	-0.8	92	0.054	100	100	2.3	0	552	441	302	388	379	412	779	224	85	73	85	73	85	-0.022	7.56	-0.01
172	25.676	25.055	0.15	0.15	1.80	78	-1.01	1.31	78	-0.8	92	0.054	100	101	2.3	0	549	441	302	388	379	412	771	224	85	73	85	73	86	-0.022	7.44	-0.01
173	25.827	25.202	0.15	0.15	1.76	78	-1.01	1.30	78	-0.8	92	0.054	100	100	2.3	0	546	441	302	387	379	411	763	227	85	73	85	73	87	-0.021	7.48	-0.01
174	25.979	25.350	0.15	0.15	1.81	78	-1.02	1.33	78	-0.8	92	0.054	101	101	2.2	-0.1	543	441	302	387	378	410	756	227	85	73	85	73	86	-0.021	7.42	-0.01
175	26.130	25.498	0.15	0.15	1.80	78	-1.02	1.35	78	-0.8	92	0.054	100	101	2.2	0	540	441	302	386	378	409	751	222	85	73	85	73	85	-0.022	7.4	-0.01
176	26.280	25.646	0.15	0.15	1.81	78	-1.01	1.34	78	-0.8	92	0.054	100	101	2.2	0	537	442	301	385	378	409	746	224	85	73	85	73	85	-0.022	7.44	-0.01
177	26.431	25.793	0.15	0.15	1.81	78	-1.03	1.32	78	-0.8	92	0.054	100	100	2.1	-0.1	534	442	301	385	378	408	743	225	85	73	85	73	85	-0.022	7.43	-0.01
178	26.581	25.941	0.15	0.15	1.78	78	-1.02	1.30	78	-0.8	92	0.054	100	101	2.1	0	531	442	301	384	378	407	739	222	85	73	85	73	86	-0.022	7.48	-0.01
179	26.732	26.088	0.15	0.15	1.77	78	-1.02	1.29	78	-0.7	92	0.054	100	100	2.1	0	529	442	301	383	377	406	737	220	85	73	85	73	86	-0.022	7.51	-0.01
180	26.884	26.237	0.15	0.15	1.80	78	-1.01	1.34	78	-0.7	92	0.054	101	102	2.1	0	526	442	301	383	377	406	735	220	85	73	85	73	85	-0.021	7.45	-0.01
181	27.035	26.384	0.15	0.15	1.80	78	-1.02	1.35	78	-0.8	92	0.054	100	100	2.1	0	524	442	300	382	377	405	733	223	85	73	85	73	86	-0.022	7.39	-0.01
182	27.185	26.532	0.15	0.15	1.81	78	-1.02	1.34	78	-0.8	92	0.054	100	101	2.0	-0.1	523	442	301	382	377	405	732	225	85	73	85	73	87	-0.022	7.4	-0.01
183	27.336	26.679	0.15	0.15	1.81	78	-1.02	1.32	78	-0.7	92	0.054	100	100	2.0	0	521	442	301	382	377	405	730	223	85	73	85	73	87	-0.021	7.41	-0.01
184	27.486	26.826	0.15	0.15	1.79	78	-1.03	1.30	78	-0.8	92	0.054	100	100	2.0	0	519	442	301	381	376	404	729	223	85	73	85	73	86	-0.020	7.44	-0.01
185	27.637	26.974	0.15	0.15	1.77	78	-1.02	1.31	78	-0.8	92	0.054	100	101	2.0	0	517	443	300	381	376	403	728	220	85	73	85	73	86	-0.020	7.39	-0.01
186	27.789	27.122	0.15	0.15	1.81	78	-1.02	1.35	78	-0.7	92	0.054	101	101	2.0	0	516	443	301	380	376	403	727	225	85	73	85	73	86	-0.020	7.47	-0.01
187	27.940	27.270	0.15	0.15	1.81	78	-1.02	1.34	78	-0.8	92	0.054	100	101	1.9	-0.1	514	443	301	380	375	403	726	220	85	73	85	73	86	-0.019	7.43	-0.01
188	28.091	27.417	0.15	0.15	1.82	78	-1.02	1.33	78	-0.8	92	0.054	100	100	1.9	0	512	444	300	381	378	403	725	224	85	73	85	73	86	-0.019	7.18	-0.01
189	28.242	27.565	0.15	0.15	1.81	78	-1.02	1.30	78	-0.8	92	0.054	100	101	1.9	0	511	444	300	382	378	403	726	224	85	72	85	73	86	-0.020	7.04	-0.01
190	28.392	27.712	0.15	0.15	1.80	78	-1.02	1.33	78	-0.8	92	0.054	100	100	1.9	0	510	444	300	382	378	403	731	228	85	72	85	73	86	-0.020	6.85	-0.01
191	28.543	27.860	0.15	0.15	1.77	78	-1.03	1.34	78	-0.8	92	0.054	100	101	1.8	-0.1	510	444	299	382	379	403	736	224	85	72	85	73	85	-0.020	6.71	-0.01

Wood Heater Test Data - ASTM E2780 / ASTM E2515

Run: 1

Manufacturer: Valley Comfort
Model: 20.2 Series
Tracking No.: 2253
Project No.: 0142WS013E
Test Date: 22-Aug-17
Beginning Clock Time: 14.29

Total Sampling Time: 276 min
Recording Interval: 1 min
Background Sample Volume: 0 cubic feet

Meter Box Y Factor: 1.003 (1) 0.997 (2) N/A (Amb)

Barometric Pressure:	Begin	Middle	End	Average
	28.69	28.68	28.64	28.67 "Hg

OMNI Equipment Numbers: 464,410,132,576,318,432,419,371,372,432,296-T55,567,413,592

PM Control Modules: 371/372
Dilution Tunnel MW(dry): 29.00 lb/lb-mole
Dilution Tunnel MW(wet): 28.78 lb/lb-mole
Dilution Tunnel H2O: 2.00 percent
Dilution Tunnel Static: -0.170 "H2O
Tunnel Area: 0.19635 ft2
Pitot Tube Cp: 0.99

Avg. Tunnel Velocity: 14.87 ft/sec.
Initial Tunnel Flow: 155.5 scfm
Average Tunnel Flow: 156.6 scfm
Post-Test Leak Check (1): 0.000 cfm @ -15 in. Hg
Post-Test Leak Check (2): 0.000 cfm @ -17 in. Hg
Average Test Piece Fuel Moisture: 20.35 Dry Basis %

Technician Signature:

Velocity Traverse Data

	Pt.1	Pt.2	Pt.3	Pt.4	Pt.5	Pt.6	Pt.7	Pt.8	Center	
Initial dP	0.040	0.050	0.054	0.036	0.040	0.054	0.050	0.038	0.054	"H2O
Temp:	90	91	91	91	91	91	91	91	91	°F

V_{strav} 14.82 ft/sec V_{scent} 16.07 ft/sec F_p 0.922

	Particulate Sampling Data														Fuel Weight (lb)		Temperature Data (°F)													Stack Gas Data		
Elapsed Time (min)	Gas Meter 1 (ft^3)	Gas Meter 2 (ft^3)	Sample Rate 1 (cfm)	Sample Rate 2 (cfm)	Orifice dH 1 ("H_2O)	Meter 1 Temp (°F)	Meter 1 Vacuum ("Hg)	Orifice dH 2 ("H_2O)	Meter 2 Temp (°F)	Meter 2 Vacuum ("Hg)	Dilution Tunnel (°F)	Dilution Tunnel Center dP	Pro. Rate 1	Pro. Rate 2	Scale Reading	Weight Change	Firebox Top	Firebox Bottom	Firebox Back	Firebox Left	Firebox Right	Avg. Stove Surface	Catalyst Exit	Stack	Filter 1	Dryer Exit 1	Filter 2	Dryer Exit 2	Ambient	Draft ("H_2O)	CO_2 (%)	CO (%)
192	28.695	28.007	0.15	0.15	1.81	78	-1.02	1.34	78	-0.8	92	0.054	101	100	1.8	0	510	443	299	381	378	402	739	224	85	72	85	73	86	-0.020	6.79	-0.01
193	28.846	28.155	0.15	0.15	1.80	78	-1.02	1.31	78	-0.8	92	0.054	100	101	1.8	0	509	443	298	380	378	402	742	227	85	72	85	73	86	-0.020	6.75	-0.01
194	28.996	28.300	0.15	0.15	1.81	78	-1.02	1.32	78	-0.7	92	0.054	100	99	1.8	0	510	443	297	380	377	401	744	225	85	72	85	73	86	-0.020	6.69	-0.01
195	29.147	28.447	0.15	0.15	1.81	78	-1.03	1.34	78	-0.8	92	0.054	100	100	1.8	0	510	442	296	379	377	401	746	227	85	72	85	73	86	-0.020	6.66	-0.01
196	29.297	28.585	0.15	0.14	1.78	78	-1.02	1.35	78	-0.8	92	0.054	100	94	1.7	-0.1	510	442	295	378	376	400	748	227	85	72	85	73	87	-0.020	6.78	-0.01
197	29.448	28.728	0.15	0.14	1.77	78	-1.03	1.36	78	-0.8	92	0.054	100	98	1.7	0	510	441	293	378	376	400	751	229	85	72	85	73	86	-0.020	6.75	-0.01
198	29.600	28.874	0.15	0.15	1.80	78	-1.02	1.35	78	-0.8	92	0.054	101	100	1.7	0	510	441	293	376	375	399	753	232	85	72	85	72	86	-0.020	6.74	-0.01
199	29.751	29.020	0.15	0.15	1.80	79	-1.02	1.33	78	-0.8	92	0.054	100	100	1.7	0	510	441	291	375	374	398	755	229	85	72	85	72	86	-0.021	6.85	-0.01
200	29.902	29.167	0.15	0.15	1.81	78	-1.02	1.30	78	-0.8	93	0.054	101	100	1.7	0	510	441	289	376	374	398	756	233	85	72	85	72	86	-0.021	6.79	-0.01
201	30.052	29.313	0.15	0.15	1.81	78	-1.03	1.31	78	-0.8	93	0.054	100	100	1.6	-0.1	510	441	288	375	373	397	756	236	85	72	85	72	86	-0.020	6.78	-0.01
202	30.203	29.461	0.15	0.15	1.79	78	-1.02	1.31	78	-0.8	93	0.054	101	101	1.6	0	510	441	287	376	373	397	757	232	85	72	85	72	86	-0.020	6.86	-0.01
203	30.354	29.608	0.15	0.15	1.77	79	-1.02	1.35	78	-0.8	93	0.054	100	100	1.6	0	510	441	286	375	372	397	758	232	85	72	85	72	86	-0.021	6.83	-0.01
204	30.506	29.754	0.15	0.15	1.79	78	-1.03	1.36	78	-0.8	93	0.054	101	100	1.6	0	510	441	284	375	372	396	758	233	85	72	85	72	85	-0.020	6.91	-0.01
205	30.657	29.901	0.15	0.15	1.80	78	-1.03	1.35	78	-0.8	93	0.054	101	100	1.6	0	510	442	283	374	372	396	759	234	85	72	85	72	86	-0.020	6.95	-0.01
206	30.807	30.048	0.15	0.15	1.81	78	-1.02	1.33	78	-0.8	93	0.054	100	100	1.5	-0.1	509	442	283	376	371	396	760	234	85	72	85	72	86	-0.020	7.03	-0.01
207	30.958	30.194	0.15	0.15	1.80	78	-1.02	1.30	78	-0.8	93	0.054	101	100	1.5	0	510	442	281	375	372	396	761	232	85	72	85	72	86	-0.020	7.06	-0.01
208	31.109	30.341	0.15	0.15	1.79	78	-1.02	1.31	78	-0.8	93	0.054	101	100	1.5	0	510	443	281	375	372	396	762	234	85	72	85	72	86	-0.020	7.19	-0.01
209	31.260	30.488	0.15	0.15	1.77	78	-1.03	1.31	78	-0.7	93	0.054	101	100	1.5	0	509	444	280	375	372	396	763	242	85	72	85	72	86	-0.020	7.25	-0.01
210	31.412	30.635	0.15	0.15	1.81	78	-1.02	1.35	78	-0.8	93	0.054	101	100	1.5	0	510	445	279	376	372	396	764	234	85	72	85	72	85	-0.020	7.17	-0.01
211	31.563	30.781	0.15	0.15	1.80	78	-1.03	1.36	78	-0.8	93	0.054	101	100	1.4	-0.1	509	446	278	376	372	396	763	237	85	72	85	72	86	-0.020	7.13	-0.01
212	31.713	30.929	0.15	0.15	1.82	78	-1.02	1.34	78	-0.8	93	0.054	100	101	1.4	0	510	447	278	376	371	396	762	238	85	72	85	72	86	-0.020	7.25	-0.01
213	31.864	31.075	0.15	0.15	1.81	78	-1.02	1.33	78	-0.8	93	0.054	101	100	1.4	0	509	448	277	377	371	396	759	243	85	72	85	72	86	-0.021	7.18	-0.01
214	32.014	31.221	0.15	0.15	1.77	78	-1.03	1.32	78	-0.8	93	0.054	100	100	1.3	-0.1	508	449	277	377	372	397	756	239	85	72	85	72	86	-0.020	7.08	-0.01
215	32.166	31.369	0.15	0.15	1.77	78	-1.02	1.30	78	-0.8	93	0.054	101	101	1.4	0.1	508	451	276	378	371	397	754	238	85	72	85	72	86	-0.020	7.13	-0.01
216	32.317	31.515	0.15	0.15	1.81	78	-1.03	1.31	78	-0.8	93	0.054	101	100	1.3	-0.1	507	452	276	378	371	397	754	239	85	72	85	72	86	-0.020	7.1	-0.01
217	32.469	31.663	0.15	0.15	1.81	78	-1.03	1.34	78	-0.8	93	0.054	101	101	1.3	0	507	453	276	378	371	397	754	246	85	72	85	72	86	-0.021	7.09	-0.01
218	32.619	31.810	0.15	0.15	1.82	78	-1.03	1.35	78	-0.8	93	0.054	100	100	1.3	0	507	455	276	377	370	397	754	241	85	72	85	72	86	-0.020	6.99	-0.01
219	32.770	31.957	0.15	0.15	1.81	78	-1.02	1.35	78	-0.8	93	0.054	101	100	1.3	0	506	456	275	377	370	397	755	241	85	72	85	72	85	-0.020	7.08	-0.01
220	32.920	32.103	0.15	0.15	1.78	78	-1.03	1.34	78	-0.8	93	0.054	100	100	1.2	-0.1	506	458	275	377	370	397	755	246	85	72	85	72	86	-0.021	7.15	-0.01
221	33.073	32.250	0.15	0.15	1.79	78	-1.03	1.32	78	-0.8	93	0.054	102	100	1.2	0	506	459	275	377	369	397	757	246	85	72	85	72	85	-0.020	7.15	-0.01
222	33.224	32.397	0.15	0.15	1.81	78	-1.03	1.30	78	-0.8	93	0.054	101	100	1.2	0	506	461	275	377	370	398	758	243	85	72	85	72	85	-0.021	7.13	-0.01
223	33.375	32.544	0.15	0.15	1.81	78	-1.02	1.33	78	-0.8	93	0.054	101	100	1.2	0	506	462	275	377	369	398	758	239	85	72	85	72	85	-0.021	7.23	-0.01

Wood Heater Test Data - ASTM E2780 / ASTM E2515

Run: 1

Manufacturer: Valley Comfort
Model: 20.2 Series
Tracking No.: 2253
Project No.: 0142WS013E
Test Date: 22-Aug-17
Beginning Clock Time: 14.29

Total Sampling Time: 276 min
Recording Interval: 1 min
Background Sample Volume: 0 cubic feet

Meter Box Y Factor: 1.003 (1) 0.997 (2) N/A (Amb)

Barometric Pressure:	Begin	Middle	End	Average
	28.69	28.68	28.64	28.67 "Hg

OMNI Equipment Numbers: 464,410,132,576,318,432,419,371,372,432,296-T55,567,413,592

PM Control Modules: 371/372
Dilution Tunnel MW(dry): 29.00 lb/lb-mole
Dilution Tunnel MW(wet): 28.78 lb/lb-mole
Dilution Tunnel H2O: 2.00 percent
Dilution Tunnel Static: -0.170 "H2O
Tunnel Area: 0.19635 ft2
Pitot Tube Cp: 0.99

Avg. Tunnel Velocity: 14.87 ft/sec.
Initial Tunnel Flow: 155.5 scfm
Average Tunnel Flow: 156.6 scfm
Post-Test Leak Check (1): 0.000 cfm @ -15 in. Hg
Post-Test Leak Check (2): 0.000 cfm @ -17 in. Hg
Average Test Piece Fuel Moisture: 20.35 Dry Basis %

Technician Signature:

Velocity Traverse Data

	Pt.1	Pt.2	Pt.3	Pt.4	Pt.5	Pt.6	Pt.7	Pt.8	Center	
Initial dP	0.040	0.050	0.054	0.036	0.040	0.054	0.050	0.038	0.054	"H2O
Temp:	90	91	91	91	91	91	91	91	91	°F

V_{strav} 14.82 ft/sec V_{scent} 16.07 ft/sec F_p 0.922

	Particulate Sampling Data														Fuel Weight (lb)		Temperature Data (°F)													Stack Gas Data		
Elapsed Time (min)	Gas Meter 1 (ft^3)	Gas Meter 2 (ft^3)	Sample Rate 1 (cfm)	Sample Rate 2 (cfm)	Orifice dH 1 ("H_2O)	Meter 1 Temp (°F)	Meter 1 Vacuum ("Hg)	Orifice dH 2 ("H_2O)	Meter 2 Temp (°F)	Meter 2 Vacuum ("Hg)	Dilution Tunnel (°F)	Dilution Tunnel Center dP	Pro. Rate 1	Pro. Rate 2	Scale Reading	Weight Change	Firebox Top	Firebox Bottom	Firebox Back	Firebox Left	Firebox Right	Avg. Stove Surface	Catalyst Exit	Stack	Filter 1	Dryer Exit 1	Filter 2	Dryer Exit 2	Ambient	Draft ("H_2O)	CO_2 (%)	CO (%)
224	33.525	32.692	0.15	0.15	1.81	78	-1.02	1.36	78	-0.8	93	0.054	100	101	1.1	-0.1	506	464	275	378	370	399	759	246	85	72	85	72	86	-0.021	7.32	-0.01
225	33.676	32.838	0.15	0.15	1.79	78	-1.03	1.35	78	-0.8	93	0.054	101	100	1.1	0	506	465	274	377	370	398	758	242	85	72	85	72	86	-0.021	7.3	-0.01
226	33.826	32.986	0.15	0.15	1.78	78	-1.03	1.35	78	-0.8	93	0.054	100	101	1.1	0	506	467	274	377	370	399	758	247	85	71	85	72	86	-0.021	7.22	-0.01
227	33.979	33.132	0.15	0.15	1.79	78	-1.03	1.34	78	-0.8	93	0.054	102	100	1.1	0	506	468	274	378	369	399	759	245	85	71	85	72	86	-0.022	7.37	-0.01
228	34.130	33.279	0.15	0.15	1.80	78	-1.03	1.31	78	-0.8	93	0.054	101	100	1.0	-0.1	506	470	275	376	367	399	756	251	85	71	85	72	86	-0.022	7.2	-0.01
229	34.281	33.426	0.15	0.15	1.80	78	-1.03	1.30	78	-0.8	93	0.054	101	100	1.0	0	506	472	275	376	366	399	752	245	85	71	85	72	85	-0.022	6.81	-0.01
230	34.432	33.573	0.15	0.15	1.81	78	-1.03	1.34	78	-0.8	93	0.054	101	100	1.0	0	505	474	275	375	365	399	748	246	85	71	85	72	86	-0.022	6.59	-0.01
231	34.582	33.721	0.15	0.15	1.79	78	-1.03	1.36	78	-0.8	93	0.054	100	101	1.0	0	505	476	275	374	364	399	746	247	85	71	85	72	86	-0.022	6.66	-0.01
232	34.733	33.868	0.15	0.15	1.77	78	-1.02	1.35	78	-0.8	93	0.054	101	100	1.0	0	504	478	276	374	362	399	745	245	85	71	85	72	85	-0.022	6.53	-0.01
233	34.885	34.015	0.15	0.15	1.79	78	-1.02	1.34	78	-0.8	93	0.054	101	100	0.9	-0.1	503	480	276	373	362	399	743	246	85	71	85	72	86	-0.022	6.47	-0.01
234	35.036	34.161	0.15	0.15	1.80	78	-1.03	1.32	78	-0.8	93	0.054	101	100	0.9	0	502	482	275	373	361	399	742	247	85	71	85	72	86	-0.022	6.52	-0.01
235	35.187	34.308	0.15	0.15	1.81	78	-1.02	1.30	78	-0.8	93	0.054	101	100	0.9	0	501	484	275	373	360	399	741	245	85	71	85	72	86	-0.022	6.46	-0.01
236	35.338	34.455	0.15	0.15	1.81	78	-1.03	1.31	78	-0.8	93	0.054	101	100	0.9	0	501	486	275	371	359	398	741	242	85	71	85	72	85	-0.022	6.44	-0.01
237	35.488	34.602	0.15	0.15	1.79	78	-1.02	1.35	78	-0.8	93	0.054	100	100	0.9	0	501	488	275	371	358	399	741	246	85	71	85	72	85	-0.022	6.4	-0.01
238	35.640	34.749	0.15	0.15	1.77	78	-1.03	1.36	78	-0.8	93	0.054	101	100	0.8	-0.1	500	490	274	372	358	399	741	242	85	71	85	72	86	-0.021	6.45	-0.01
239	35.791	34.896	0.15	0.15	1.80	78	-1.02	1.35	78	-0.8	93	0.054	101	100	0.8	0	499	492	275	371	357	399	741	242	85	71	85	72	85	-0.022	6.38	-0.01
240	35.943	35.042	0.15	0.15	1.80	78	-1.03	1.34	78	-0.8	93	0.054	101	100	0.8	0	499	494	274	370	357	399	741	246	85	71	85	72	86	-0.021	6.33	-0.01
241	36.093	35.189	0.15	0.15	1.30	78	-1.03	1.32	78	-0.8	93	0.054	100	100	0.8	0	498	495	274	370	356	399	743	241	85	71	85	72	85	-0.022	6.31	-0.01
242	36.244	35.335	0.15	0.15	1.80	78	-1.03	1.30	78	-0.8	93	0.054	101	100	0.7	-0.1	498	497	273	369	355	398	744	241	85	71	85	72	86	-0.021	6.34	-0.01
243	36.394	35.482	0.15	0.15	1.79	78	-1.03	1.31	78	-0.8	93	0.054	100	100	0.7	0	498	499	273	369	355	399	745	246	85	71	85	72	86	-0.021	6.31	-0.01
244	36.547	35.629	0.15	0.15	1.77	78	-1.03	1.33	78	-0.8	93	0.054	102	100	0.7	0	498	501	272	368	354	399	745	243	85	71	85	72	86	-0.021	6.26	-0.01
245	36.698	35.776	0.15	0.15	1.81	78	-1.04	1.36	78	-0.8	93	0.054	101	100	0.7	0	497	503	272	369	354	399	746	246	85	71	85	72	85	-0.021	6.35	-0.01
246	36.849	35.924	0.15	0.15	1.81	78	-1.03	1.35	78	-0.8	93	0.054	101	101	0.7	0	497	505	271	367	353	399	746	243	85	71	85	72	86	-0.022	6.36	-0.01
247	36.999	36.070	0.15	0.15	1.82	78	-1.04	1.34	78	-0.8	93	0.054	100	100	0.6	-0.1	497	507	270	367	353	399	747	248	85	71	85	72	85	-0.021	6.25	-0.01
248	37.150	36.217	0.15	0.15	1.80	78	-1.03	1.32	78	-0.8	93	0.054	101	100	0.6	0	497	509	270	366	352	399	746	242	85	71	85	72	86	-0.021	6.47	-0.01
249	37.301	36.363	0.15	0.15	1.77	78	-1.03	1.30	78	-0.8	93	0.054	101	100	0.6	0	496	510	269	366	352	399	745	241	85	71	85	72	86	-0.021	6.61	-0.01
250	37.453	36.510	0.15	0.15	1.77	78	-1.04	1.29	78	-0.8	93	0.054	101	100	0.6	0	496	512	268	366	351	399	747	243	85	71	85	72	86	-0.021	6.54	-0.01
251	37.605	36.657	0.15	0.15	1.81	78	-1.03	1.33	77	-0.8	93	0.054	101	101	0.6	0	496	513	268	365	350	398	747	248	85	71	85	72	85	-0.021	6.65	-0.01
252	37.755	36.804	0.15	0.15	1.82	78	-1.03	1.36	77	-0.8	93	0.054	100	101	0.6	0	496	514	268	365	350	399	748	242	85	71	85	72	86	-0.021	6.71	-0.01
253	37.906	36.951	0.15	0.15	1.81	78	-1.04	1.35	77	-0.8	93	0.054	101	101	0.5	-0.1	495	516	268	365	350	399	748	248	85	71	85	72	85	-0.021	6.68	-0.01
254	38.057	37.098	0.15	0.15	1.80	78	-1.03	1.34	77	-0.8	93	0.054	101	101	0.5	0	496	517	268	365	349	399	748	246	85	71	85	72	87	-0.021	6.65	-0.01
255	38.208	37.244	0.15	0.15	1.76	78	-1.03	1.32	77	-0.8	93	0.054	101	100	0.5	0	495	518	268	365	348	399	748	246	85	71	85	72	85	-0.021	6.67	-0.01

Wood Heater Test Data - ASTM E2780 / ASTM E2515

Run: 1

Manufacturer: Valley Comfort
Model: 20.2 Series
Tracking No.: 2253
Project No.: 0142WS013E
Test Date: 22-Aug-17
Beginning Clock Time: 14.29

Total Sampling Time: 276 min
Recording Interval: 1 min
Background Sample Volume: 0 cubic feet

Meter Box Y Factor: 1.003 (1) 0.997 (2) N/A (Amb)

Barometric Pressure:	Begin	Middle	End	Average	
	28.69	28.68	28.64	28.67	"Hg

OMNI Equipment Numbers: 464,410,132,576,318,432,419,371,372,432,296-T55,567,413,592

PM Control Modules: 371/372
Dilution Tunnel MW(dry): 29.00 lb/lb-mole
Dilution Tunnel MW(wet): 28.78 lb/lb-mole
Dilution Tunnel H2O: 2.00 percent
Dilution Tunnel Static: -0.170 "H2O
Tunnel Area: 0.19635 ft2
Pitot Tube Cp: 0.99

Avg. Tunnel Velocity: 14.87 ft/sec.
Initial Tunnel Flow: 155.5 scfm
Average Tunnel Flow: 156.6 scfm
Post-Test Leak Check (1): 0.000 cfm @ -15 in. Hg
Post-Test Leak Check (2): 0.000 cfm @ -17 in. Hg
Average Test Piece Fuel Moisture: 20.35 Dry Basis %

Technician Signature:

Velocity Traverse Data

	Pt.1	Pt.2	Pt.3	Pt.4	Pt.5	Pt.6	Pt.7	Pt.8	Center	
Initial dP	0.040	0.050	0.054	0.036	0.040	0.054	0.050	0.038	0.054	"H2O
Temp:	90	91	91	91	91	91	91	91	91	°F

V_{strav} 14.82 ft/sec V_{scent} 16.07 ft/sec F_p 0.922

	Particulate Sampling Data														Fuel Weight (lb)		Temperature Data (°F)													Stack Gas Data		
Elapsed Time (min)	Gas Meter 1 (ft^3)	Gas Meter 2 (ft^3)	Sample Rate 1 (cfm)	Sample Rate 2 (cfm)	Orifice dH 1 ("H_2O)	Meter 1 Temp (°F)	Meter 1 Vacuum ("Hg)	Orifice dH 2 ("H_2O)	Meter 2 Temp (°F)	Meter 2 Vacuum ("Hg)	Dilution Tunnel (°F)	Dilution Tunnel Center dP	Pro. Rate 1	Pro. Rate 2	Scale Reading	Weight Change	Firebox Top	Firebox Bottom	Firebox Back	Firebox Left	Firebox Right	Avg. Stove Surface	Catalyst Exit	Stack	Filter 1	Dryer Exit 1	Filter 2	Dryer Exit 2	Ambient	Draft ("H_2O)	CO_2 (%)	CO (%)
256	38.360	37.390	0.15	0.15	1.81	78	-1.03	1.32	77	-0.8	93	0.054	101	100	0.5	0	496	519	267	366	349	399	748	248	85	71	85	72	86	-0.021	6.69	-0.01
257	38.511	37.537	0.15	0.15	1.81	78	-1.04	1.29	77	-0.8	93	0.054	101	101	0.4	-0.1	495	521	267	365	348	399	746	246	85	71	85	72	85	-0.021	6.14	-0.01
258	38.662	37.684	0.15	0.15	1.82	78	-1.04	1.33	77	-0.8	93	0.054	101	101	0.4	0	494	522	268	365	348	399	745	245	85	71	85	72	86	-0.021	6.05	-0.01
259	38.813	37.832	0.15	0.15	1.81	78	-1.03	1.36	77	-0.8	93	0.054	101	101	0.4	0	495	522	267	364	348	399	745	239	85	71	85	72	86	-0.021	5.91	-0.01
260	38.963	37.978	0.15	0.15	1.78	78	-1.04	1.35	78	-0.8	94	0.054	100	100	0.4	0	493	523	268	363	347	399	743	246	85	71	85	72	86	-0.021	5.94	-0.01
261	39.115	38.126	0.15	0.15	1.77	78	-1.03	1.34	78	-0.8	94	0.054	101	101	0.4	0	493	524	267	362	346	398	741	246	85	71	85	72	85	-0.020	5.86	-0.01
262	39.266	38.272	0.15	0.15	1.81	78	-1.04	1.34	78	-0.8	94	0.054	101	100	0.3	-0.1	492	525	266	362	345	398	740	248	85	71	85	72	85	-0.021	5.95	-0.01
263	39.418	38.418	0.15	0.15	1.81	78	-1.03	1.32	78	-0.8	94	0.054	101	100	0.3	0	491	527	266	360	344	398	739	251	85	71	85	72	86	-0.021	5.99	-0.01
264	39.568	38.565	0.15	0.15	1.82	78	-1.04	1.29	78	-0.8	94	0.054	100	100	0.3	0	491	528	265	359	343	397	738	246	85	71	85	72	86	-0.020	6.01	-0.01
265	39.719	38.713	0.15	0.15	1.81	78	-1.04	1.34	78	-0.8	94	0.054	101	101	0.3	0	490	529	265	358	342	397	737	250	85	71	85	72	85	-0.021	5.88	-0.01
266	39.870	38.860	0.15	0.15	1.77	78	-1.04	1.37	78	-0.8	93	0.054	101	100	0.3	0	489	530	265	357	341	396	735	247	85	71	85	72	85	-0.021	5.86	-0.01
267	40.022	39.007	0.15	0.15	1.80	78	-1.04	1.35	78	-0.8	93	0.054	101	100	0.2	-0.1	488	530	264	356	340	396	733	247	85	71	85	72	86	-0.021	5.91	-0.01
268	40.173	39.154	0.15	0.15	1.81	78	-1.04	1.35	78	-0.8	93	0.054	101	100	0.2	0	487	531	263	355	340	395	731	248	85	71	85	72	86	-0.021	6.02	-0.01
269	40.324	39.300	0.15	0.15	1.81	78	-1.03	1.32	78	-0.8	93	0.054	101	100	0.2	0	486	532	264	355	339	395	730	246	85	71	85	72	85	-0.021	6.1	-0.01
270	40.475	39.447	0.15	0.15	1.81	78	-1.03	1.30	77	-0.8	93	0.054	101	101	0.2	0	485	532	263	354	338	394	729	243	85	71	85	72	86	-0.021	5.95	-0.01
271	40.626	39.595	0.15	0.15	1.78	78	-1.03	1.33	77	-0.8	93	0.054	101	101	0.2	0	484	533	263	353	338	394	727	242	85	71	85	72	86	-0.021	5.91	-0.01
272	40.777	39.743	0.15	0.15	1.77	78	-1.03	1.36	77	-0.8	93	0.054	101	101	0.1	-0.1	483	533	263	353	337	394	725	250	85	71	85	72	85	-0.021	6.13	-0.01
273	40.929	39.890	0.15	0.15	1.81	78	-1.03	1.35	77	-0.8	93	0.054	101	101	0.1	0	482	534	262	352	337	393	724	246	85	71	85	72	85	-0.021	6.13	-0.01
274	41.081	40.037	0.15	0.15	1.80	78	-1.04	1.35	77	-0.8	93	0.054	101	101	0.1	0	481	535	262	352	336	393	723	248	85	71	85	72	86	-0.021	6.14	-0.01
275	41.231	40.184	0.15	0.15	1.82	78	-1.04	1.32	77	-0.8	93	0.054	100	101	0.1	0	480	535	262	351	336	393	721	245	85	71	85	72	86	-0.021	6.12	-0.01
276	41.382	40.331	0.15	0.15	1.81	78	-1.04	1.31	77	-0.8	93	0.054	101	101	0.0	-0.1	479	536	262	351	336	393	720	243	85	71	85	72	86	-0.021	6.18	-0.01
Avg/Tot	41.382	40.331	0.15	0.15	1.77	78		1.33	78		94	0.054	100	100								13.8				73	85	73	85	-0.029		

Wood Heater Lab Data - ASTM E2780 / ASTM E2515

Manufacturer:	Valley Comfort	Equipment Numbers:	283A, 637, 592
Model:	20.2 Series		
Tracking No.:	2253		
Project No.:	0142WS013E		
Run #:	1		
Date:	8/22/17		

TRAIN 1 (First Hour emissions)

Sample Component	Reagent	Filter, Probe or Dish #	Weights		
			Final, mg	Tare, mg	Particulate, mg
B. Front filter catch	Filter	D225	120.5	119.5	1.0
C. Rear filter catch	Filter				0.0
D. Probe catch*	Probe				0.0
E. Filter seals catch*	Seals				0.0

Sub-Total	Total Particulate, mg:	1.0

TRAIN 1 (Post First Hour Change-out)

Sample Component	Reagent	Filter, Probe or Dish #	Weights		
			Final, mg	Tare, mg	Particulate, mg
B. Front filter catch	Filter	D226	122.6	121.5	1.1
C. Rear filter catch	Filter	D227	120.5	120.2	0.3
D. Probe catch*	Probe	3	116010.6	116010.6	0.0
E. Filter seals catch*	Seals	R501	3285.3	3285.3	0.0

Sub-Total	Total Particulate, mg:	1.4
Train 1 Aggregate	Total Particulate, mg:	**2.4**

TRAIN 2

Sample Component	Reagent	Filter, Probe or Dish #	Weights		
			Final, mg	Tare, mg	Particulate, mg
A. Front filter catch	Filter	D228	123.7	121.9	1.8
B. Rear filter catch	Filter	D229	119.7	119.8	-0.1
C. Probe catch*	Probe	22	114344.6	114344.5	0.1
D. Filter seals catch*	Seals	R502	3423.9	3423.3	0.6

Total Particulate, mg:	**2.4**

AMBIENT

Sample Component	Reagent	Filter # or Probe #	Weights		
			Final, mg	Tare, mg	Particulate, mg
A. Front filter catch*	Filter				0.0

Total Particulate, mg:	**0.0**

*Particulate catch that results in a negative number, is assumed to be zero for probes and seals, negative numbers for filters are assumed to be part of the seal weight.

Component	Equations:
A. Front filter catch	Final (mg) - Tare (mg) = Particulate, mg
B. Rear filter catch	Final (mg) - Tare (mg) = Particulate, mg
C. Probe catch	Final (mg) - Tare (mg) = Particulate, mg

Technician Signature:

Wood Heater Test Results - ASTM E2780 / ASTM E2515

Manufacturer:	Valley Comfort
Model:	20.2 Series
Project No.:	0142WS013E
Tracking No.:	2253
Run:	1
Test Date:	08/22/17

Burn Rate	**1.04 kg/hr dry**
Average Tunnel Temperature	94 degrees Fahrenheit
Average Gas Velocity in Dilution Tunnel - vs	14.87 feet/second
Average Gas Flow Rate in Dilution Tunnel - Qsd	9396.3 dscf/hour
Average Delta p	0.054 inches H20
Total Time of Test	276 minutes

	AMBIENT	SAMPLE TRAIN 1	SAMPLE TRAIN 2	FIRST HOUR FILTER (TRAIN 1)
Total Sample Volume - Vm	0.000 cubic feet	41.382 cubic feet	40.331 cubic feet	8.859 cubic feet
Average Gas Meter Temperature	85 degrees Fahrenheit	78 degrees Fahrenheit	78 degrees Fahrenheit	77 degrees Fahrenheit
Total Sample Volume (Standard Conditions) - Vmstd	0.000 dscf	39.207 dscf	37.960 dscf	8.400 dscf
Total Particulates - m_n	0 mg	2.4 mg	2.4 mg	1 mg
Particulate Concentration (dry-standard) - C_r/C_s	0.000000 grams/dscf	0.00006 grams/dscf	0.00006 grams/dscf	0.00012 grams/dscf
Total Particulate Emissions - E_T	0.00 grams	2.65 grams	2.73 grams	1.12 grams
Particulate Emission Rate	0.00 grams/hour	0.58 grams/hour	0.59 grams/hour	1.12 grams/hour
Emissions Factor		0.55 g/kg	0.57 g/kg	0.80 g/kg
Difference from Average Total Particulate Emissions		0.04 grams	0.04 grams	

Dual Train Comparison Results Are Acceptable

	FINAL AVERAGE RESULTS
Complete Test Run	
Total Particulate Emissions - E_T	2.69 grams
Particulate Emission Rate	**0.58 grams/hour**
Emissions Factor	0.56 grams/kg
First Hour Emissions	
Total Particulate Emissions - E_T	1.12 grams
Particulate Emission Rate	1.12 grams/hour
Emissions Factor	0.80 grams/kg
7.5% of Average Total Particulate Emissions	0.20 grams

	QUALITY CHECKS
Filter Temps < 90 °F	OK
Filter Face Velocity (47 mm)	OK
Dryer Exit Temp < 80F	OK
Leakage Rate	OK
Ambient Temp (55-90°F)	OK
Negative Probe Weight Eval.	OK
Pro-Rate Variation	OK
Stove Surface ΔT	OK

Technician Signature:

Wood Heater Efficiency Results - CSA B415.1

Manufacturer: Valley Comfort
Model: 20.2 Series
Date: 08/22/17
Run: 1
Control #: 0142WS013E
Test Duration: 276
Output Category: II

Technician Signature: _____

Test Results in Accordance with CSA B415.1-09

	HHV Basis	LHV Basis
Overall Efficiency	78.99%	85.4%
Combustion Efficiency	98.5%	98.5%
Heat Transfer Efficiency	80%	86.6%

Output Rate (kJ/h)	16,287	15,450	(Btu/h)
Burn Rate (kg/h)	1.04	2.29	(lb/h)
Input (kJ/h)	20,619	19,559	(Btu/h)

Test Load Weight (dry kg)	4.79	10.55	dry lb
MC wet (%)	16.91131668		
MC dry (%)	20.35		
Particulate (g)	0.58		
CO (g)	126		
Test Duration (h)	4.60		

Emissions	Particulate	CO
g/MJ Output	0.01	1.69
g/kg Dry Fuel	0.12	26.37
g/h	0.13	27.45
lb/MM Btu Output	0.02	3.92

Air/Fuel Ratio (A/F)	14.32

VERSION: 2.2 12/14/2009

OMNI-Test Laboratories, Inc. **ASTM E2780Wood Heater Run Sheets**

Client: **Valley Comfort Systems, Inc.** Project Number: **142WS013E** Run Number: **1**
Model: **20.2 Series** Tracking Number: **2253** Date: **8/22/17**
Test Crew: **A. Kravitz**
OMNI Equipment ID numbers: 464,410,132,576,318,432,419,371,372,432,296-T55,567,413,592

Wood Heater Run Notes

Air Control Settings

Primary:

Medium Low:
9° From Horizontal

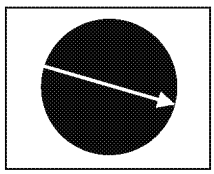

Secondary: Auto

Tertiary/Pilot: Fixed

Fan: On Med Low

Preburn Notes

Time	Notes
0:00	Reduced air to test setting

Test Notes

Sketch test fuel configuration:

Side View:

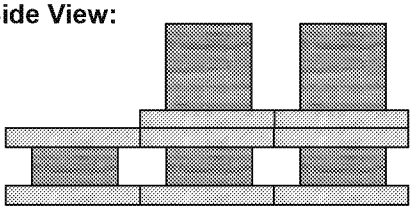

Start up procedures & Timeline:

Bypass: **Closed**
Fuel loaded by: **0:45**
Door closed at: **0:50**
Primary air: **Set @ 4:45**

Notes: **None**

Time	Notes
30:00	Set fan to test setting
60:00	Replaced Filter A
188:00-193:00	Optical encoder sticking, assume constant sample rate

Technician Signature: Date: 9/20/2017

Control No. P-SFDT-0001, Effective Date: 01/12/2016

OMNI-Test Laboratories, Inc. **ASTM E2780Wood Heater Run Sheets**

Client:**Valley Comfort Systems, Inc.** Project Number:**142WS013E** Run Number: **1**
Model:**20.2 Series** Tracking Number:**2253** Date: **8/22/17**
Test Crew:**A. Kravitz**
OMNI Equipment ID numbers:464,410,132,576,318,432,419,371,372,432,296-T55,567,413,592
Wood Heater Supplemental Data

Start Time: 14:29 Booth #: N/A (site testing)

Stop Time: 19:05

Stack Gas Leak Check:

Initial: 0 Final: 0

Sample Train Leak Check:

A: 0 @-15" Hg
B: 0 @ -18 "Hg

Calibrations: Span Gas CO_2: 17.00 CO: 4.267

	Pre Test		Post Test	
	Zero	Span	Zero	Span
Time	13:20	13:25	19:11	19:14
CO_2	0.00	17.01	0.14	16.93
CO	0.000	4.268	0.008	4.239

Air Velocity (ft/min): Initial: <50 Final: <50
Scale Audit (lbs): Initial: 10.0 Final: 10.0
Pitot Tube Leak Test: Initial: 0 Final: 0
Stack Diameter (in): 6
Induced Draft: 0
% Smoke Capture: 100
Flue Pipe Cleaned Prior to First Test in Series:
Date: 8/21/17 Initials: AK

	Initial	Middle	Ending
P_b (in/Hg)	28.69	28.68	28.64
RH (%)	36.6	34.7	33.3
Ambient (°F)	76	80	79

Background Filter Volume: N/A

Tunnel Traverse		
Microtector Reading	dP (in H_2O)	T(°F)
0.020	0.040	90
0.025	0.050	91
0.027	0.054	91
0.018	0.036	91
0.020	0.040	91
0.027	0.054	91
0.025	0.050	91
0.018	0.038	91
Center:		
.0.027	0.054	91

Tunnel Static Pressure (in H_20):	
Beginning of Test	End of Test
-0.17	-0.17

Technician Signature: AK Date: 9/20/2017

Control No. P-SFDT-0001, Effective Date: 01/12/2016

RUN 2

Wood Heater Preburn Data - ASTM E2780

Run:	2

Technician Signature: _____

Manufacturer:	Valley Comfort
Model:	20.2 Series
Tracking No.:	2253
Project No.:	0142WS013E
Test Date:	8/23/17
Beginning Clock Time:	8:38

Preburn Fuel Data

Fuel Piece Lengths (in.):	13	
Total Preburn Weight (lb):	14.3	
uel Moisture Readings (% DB):	19.4	18.6
	21.4	22.3
	19.7	23.8
	19.3	19.9
	19	18.7
Avg Preburn Moisture (% DB):	20.21	

Coal Bed Range (lb):	2.4 (min)	3.0 (max)

			Temperatures (°F)							
Elapsed Time (min)	Scale (lb)	Stack Draft (in H_2O)	FB Top	FB Bottom	FB Back	FB Left	FB Right	Avg. FB	Stack	Ambient
0	14.3	-0.048	630	512	261	381	408	438.3	358	76
1	14.1	-0.049	636	509	255	375	403	435.7	365	76
2	14	-0.049	642	506	250	369	398	433.3	364	76
3	13.8	-0.049	645	503	245	365	394	430.5	367	76
4	13.6	-0.049	650	500	241	362	390	428.7	372	76
5	13.5	-0.05	656	496	237	358	388	427	371	76
6	13.3	-0.05	664	493	234	355	385	426.2	381	76
7	13.1	-0.05	670	490	230	352	383	425.2	382	76
8	12.9	-0.051	680	487	228	350	382	425.3	390	77
9	12.8	-0.051	689	483	225	348	380	425	398	76
10	12.6	-0.051	699	480	223	348	380	425.7	402	77
11	12.4	-0.052	708	477	221	348	379	426.5	407	76
12	12.2	-0.052	714	474	219	346	380	426.5	410	77
13	11.9	-0.053	724	471	218	347	380	427.9	417	76
14	11.7	-0.052	731	468	217	348	382	429.2	415	77
15	11.6	-0.053	738	466	216	349	384	430.4	414	77
16	11.3	-0.053	745	463	215	350	386	431.9	420	76
17	11.1	-0.053	752	461	215	352	389	433.7	420	77
18	10.9	-0.053	761	459	214	353	393	435.9	420	77
19	10.7	-0.053	769	457	214	356	397	438.7	424	77
20	10.4	-0.053	776	455	214	358	401	440.8	422	77
21	10.2	-0.053	783	453	214	362	406	443.7	421	76
22	10	-0.053	788	452	214	367	410	446.2	425	77
23	9.8	-0.052	785	451	214	372	415	447.4	429	77
24	9.7	-0.052	778	450	215	375	420	447.6	426	77
25	9.6	-0.051	771	448	216	379	423	447.5	412	77
26	9.4	-0.051	765	447	216	383	426	447.4	409	77
27	9.3	-0.05	757	446	217	384	427	446.4	390	77
28	9.2	-0.05	749	445	217	385	426	444.3	388	77
29	9.1	-0.05	740	444	218	386	424	442.6	383	77
30	9	-0.05	733	443	218	386	423	440.7	379	78
31	8.9	-0.049	727	442	218	385	422	438.8	383	78
32	8.8	-0.049	721	441	219	383	420	436.7	377	78
33	8.7	-0.049	715	440	218	383	419	435.2	369	78
34	8.6	-0.049	712	439	218	383	418	434	375	78
35	8.5	-0.049	708	439	218	385	416	433.1	368	78
36	8.4	-0.049	707	438	218	384	415	432.4	359	78
37	8.2	-0.05	708	438	217	384	417	432.8	375	78
38	8	-0.051	717	438	217	388	422	436.4	384	78

Wood Heater Preburn Data - ASTM E2780

Run:	2

Technician Signature: _____

Manufacturer:	Valley Comfort
Model:	20.2 Series
Tracking No.:	2253
Project No.:	0142WS013E
Test Date:	8/23/17
Beginning Clock Time:	8:38

Preburn Fuel Data

Fuel Piece Lengths (in.):	13	
Total Preburn Weight (lb):	14.3	
uel Moisture Readings (% DB):	19.4	18.6
	21.4	22.3
	19.7	23.8
	19.3	19.9
	19	18.7
Avg Preburn Moisture (% DB):	20.21	

Coal Bed Range (lb):	2.4 (min)	3.0 (max)

			Temperatures (°F)							
Elapsed Time (min)	Scale (lb)	Stack Draft (in H_2O)	FB Top	FB Bottom	FB Back	FB Left	FB Right	Avg. FB	Stack	Ambient
39	7.8	-0.051	729	438	217	393	429	441.4	389	78
40	7.6	-0.052	743	439	218	401	435	447.2	398	78
41	7.4	-0.052	755	441	218	409	441	452.7	400	78
42	7.2	-0.052	767	443	219	414	447	458.1	402	78
43	7	-0.053	777	445	219	420	454	463.3	413	79
44	6.8	-0.052	785	448	220	428	462	468.6	406	78
45	6.7	-0.052	785	450	224	435	469	472.5	404	78
46	6.5	-0.049	778	451	230	451	479	477.8	371	78
47	6.4	-0.049	776	452	235	459	487	481.6	365	79
48	6.3	-0.048	773	453	240	465	492	484.4	352	78
49	6.2	-0.048	770	454	243	471	494	486.4	349	79
50	6	-0.048	768	456	247	478	495	488.5	350	79
51	5.9	-0.047	768	457	250	485	497	491.2	350	78
52	5.8	-0.048	769	458	252	490	499	493.5	352	79
53	5.6	-0.047	772	459	256	495	501	496.7	345	78
54	5.5	-0.047	775	460	258	499	503	499	343	78
55	5.4	-0.046	777	462	261	503	504	501.3	335	79
56	5.2	-0.047	779	463	264	507	504	503.5	335	78
57	5.1	-0.048	780	464	267	514	504	505.9	334	79
58	5	-0.048	780	466	270	519	504	507.7	328	79
59	4.9	-0.049	780	467	273	522	504	509.2	325	79
60	4.8	-0.047	778	468	276	526	503	510.6	326	79
61	4.7	-0.047	777	470	278	529	503	511.5	318	79
62	4.6	-0.046	774	471	281	532	502	512.3	312	79
63	4.5	-0.046	771	473	284	536	501	513	309	79
64	4.4	-0.047	768	474	286	536	501	513.1	305	79
65	4.3	-0.047	767	476	288	537	501	513.7	308	79
66	4.2	-0.046	767	478	290	538	503	515.1	312	78
67	4.1	-0.046	767	480	291	540	505	516.7	311	79
68	4	-0.046	767	483	293	541	508	518.6	308	79
69	3.9	-0.046	768	486	294	541	509	519.5	307	79
70	3.9	-0.045	767	489	296	541	511	520.6	297	79
71	3.8	-0.045	765	492	297	541	512	521.7	297	79
72	3.7	-0.044	762	496	298	541	513	522	297	79
73	3.6	-0.044	760	499	299	543	513	523	294	79
74	3.6	-0.045	757	503	300	543	514	523.4	293	79
75	3.5	-0.044	754	507	301	541	513	523.2	292	79
76	3.5	-0.044	749	511	301	539	514	522.6	283	79
77	3.4	-0.043	743	516	303	535	513	522	282	79

Wood Heater Preburn Data - ASTM E2780

Run:	2

Technician Signature: _____

Manufacturer:	Valley Comfort
Model:	20.2 Series
Tracking No.:	2253
Project No.:	0142WS013E
Test Date:	8/23/17
Beginning Clock Time:	8:38

Preburn Fuel Data

Fuel Piece Lengths (in.):	13	
Total Preburn Weight (lb):	14.3	
uel Moisture Readings (% DB):	19.4	18.6
	21.4	22.3
	19.7	23.8
	19.3	19.9
	19	18.7
Avg Preburn Moisture (% DB):	20.21	

Coal Bed Range (lb):	2.4 (min)	3.0 (max)

			Temperatures (°F)							
Elapsed Time (min)	Scale (lb)	Stack Draft (in H_2O)	FB Top	FB Bottom	FB Back	FB Left	FB Right	Avg. FB	Stack	Ambient
78	3.4	-0.043	738	520	303	533	513	521.4	282	79
79	3.3	-0.043	732	525	305	531	512	521	280	80
80	3.3	-0.042	727	529	307	529	511	520.7	274	80
81	3.3	-0.042	721	534	308	526	510	519.8	269	79
82	3.2	-0.042	716	538	310	523	509	519.2	272	80
83	3.2	-0.041	709	542	312	522	507	518.5	270	80
84	3.2	-0.041	703	547	314	520	505	517.6	268	79
85	3.1	-0.041	695	551	315	518	503	516.5	260	79
86	3.1	-0.041	689	555	317	516	500	515.3	261	80
87	3.1	-0.04	681	559	319	516	497	514.4	260	79
88	3	-0.04	675	562	319	514	494	513	255	80
89	3	-0.04	668	565	321	511	492	511.6	264	80
90	3	-0.04	663	568	323	510	490	510.6	253	80
91	2.9	-0.04	657	571	324	509	487	509.6	261	79
92	2.9	-0.04	652	574	325	506	486	508.4	261	80
93	2.9	-0.04	647	577	325	504	484	507.3	256	80
94	2.9	-0.04	642	579	326	503	481	506.4	257	80
95	2.8	-0.039	637	582	327	500	480	505.3	256	79
96	2.8	-0.04	634	585	328	499	478	504.7	253	79
97	2.8	-0.039	629	588	328	498	476	503.6	254	80
98	2.7	-0.039	625	590	328	495	474	502.3	258	80
99	2.7	-0.039	622	593	328	491	472	501.1	253	79
100	2.7	-0.039	619	595	328	489	471	500.2	253	79
101	2.6	-0.039	616	597	328	487	469	499.3	256	79
102	2.6	-0.039	612	599	327	486	467	498.4	265	79
103	2.6	-0.04	609	602	327	485	465	497.6	266	79
104	2.6	-0.039	606	604	327	483	465	496.9	260	79
105	2.5	-0.04	604	605	327	481	463	496	259	79
106	2.5	-0.039	601	607	327	479	462	495.2	264	79
107	2.5	-0.04	600	608	327	479	461	494.8	261	80

Wood Heater Test Fuel Data - ASTM E2780

Manufacturer:	Valley Comfort	PB Time	6:30	12% Cal:	12.0
Model:	20.2 Series	PB Temp	70	22% Cal:	22.0
Tracking No.:	2253				
Project No.:	0142WS013E	Test Time	9:30		
Test Date:	8/23/2017	Test Temp	80		
Run No.:	2				

Firebox Volume (ft^3):	1.82
Fuel Piece Length (in):	13
2x4 Crib Weight (lb):	5.2
4x4 Crib Weight (lb):	6.9

Total Fuel Weight (Dry Basis, lb):	9.9	
Fuel Density (lb/ft^3, Dry Basis):	29.91	OK
Loading Density (lb/ft^3, Wet Basis):	6.65	OK
2x4 Percentage:	43%	OK

Coal Bed Range (20-25%): 2.42 - 3.025

Test Fuel Piece	Weight (lb)	Size	Readings (Dry Basis %)			Dry Weight (lb)
1	1.3	2"x 4"	24.5	23.8	23.1	1.05
2	1.4	2"x 4"	22.7	21.5	21.9	1.15
3	1.5	2"x 4"	19.5	19.2	19.3	1.26
4	3.4	4"x 4"	22.7	23.8	24.3	2.75
5	3.5	4"x 4"	23.3	23.2	21.7	2.85

Spacer Readings (Dry Basis %)			
18.6	19.3		
17.0	20.2		
17.1	17.1		
16.0			
17.3			
20.1			
16.9			
20.6			
16.6			
16.5			
16.5			

Technician Signature: _____

Wood Heater Test Data - ASTM E2780 / ASTM E2515

Run: 2

Manufacturer: Valley Comfort
Model: 20.2 Series
Tracking No.: 2253
Project No.: 0142WS013E
Test Date: 23-Aug-17
Beginning Clock Time: 10:24

Total Sampling Time: 175 min
Recording Interval: 1 min
Background Sample Volume: _____ cubic feet

Meter Box Y Factor: 1.003 (1) 0.997 (2) _____ (Amb)

Barometric Pressure:	Begin	Middle	End	Average
	28.72	28.71	28.70	28.71 "Hg

OMNI Equipment Numbers: 464,410,132,576,318,432,419,371,372,432,296-T55,567,413,592

PM Control Modules:
Dilution Tunnel MW(dry): 29.00 lb/lb-mole
Dilution Tunnel MW(wet): 28.78 lb/lb-mole
Dilution Tunnel H2O: 2.00 percent
Dilution Tunnel Static: -0.170 "H2O
Tunnel Area: 0.19635 ft2
Pitot Tube Cp: 0.99

Avg. Tunnel Velocity: 13.45 ft/sec.
Initial Tunnel Flow: 138.3 scfm
Average Tunnel Flow: 140.7 scfm
Post-Test Leak Check (1): 0.000 cfm @ -18 in. Hg
Post-Test Leak Check (2): 0.000 cfm @ -18 in. Hg
Average Test Piece Fuel Moisture: 22.30 Dry Basis %

Technician Signature: _____

Velocity Traverse Data

	Pt.1	Pt.2	Pt.3	Pt.4	Pt.5	Pt.6	Pt.7	Pt.8	Center	
Initial dP	0.028	0.044	0.042	0.026	0.032	0.046	0.044	0.030	0.048	"H2O
Temp:	99	99	99	99	99	99	99	99	99	°F

V_{strav} 13.45 ft/sec V_{scent} 15.25 ft/sec F_p 0.882

	Particulate Sampling Data														Fuel Weight (lb)		Temperature Data (°F)													Stack Gas Data		
Elapsed Time (min)	Gas Meter 1 (ft^3)	Gas Meter 2 (ft^3)	Sample Rate 1 (cfm)	Sample Rate 2 (cfm)	Orifice dH 1 ("H_2O)	Meter 1 Temp (°F)	Meter 1 Vacuum ("Hg)	Orifice dH 2 ("H_2O)	Meter 2 Temp (°F)	Meter 2 Vacuum ("Hg)	Dilution Tunnel (°F)	Dilution Tunnel Center dP	Pro. Rate 1	Pro. Rate 2	Scale Reading	Weight Change	Firebox Top	Firebox Bottom	Firebox Back	Firebox Left	Firebox Right	Avg. Stove Surface	Catalyst Exit	Stack	Filter 1	Dryer Exit 1	Filter 2	Dryer Exit 2	Ambient	Draft ("H_2O)	CO_2 (%)	CO (%)
0	0.000	0.000			1.69	75	-1.17	1.30	75	-0.6	126	0.048			12.1		606	614	347	474	460	500	702	407	79	70	80	70	79	-0.063	1.72	0.02
1	0.118	0.117	0.12	0.12	1.69	75	-1.19	1.30	75	-0.7	117	0.048	83	81	12.0	-0.1	604	615	350	473	458	500	702	364	80	70	80	70	79	-0.065	3.77	0.08
2	0.261	0.234	0.14	0.12	1.67	75	-1.2	1.35	75	-0.8	113	0.048	100	81	11.8	-0.2	612	616	355	469	456	502	873	380	80	70	80	70	79	-0.068	9.34	0.31
3	0.402	0.368	0.14	0.13	1.68	75	-1.2	1.36	75	-0.8	111	0.048	99	93	11.6	-0.2	629	615	357	466	457	505	957	388	80	70	81	71	79	-0.069	9.23	0.32
4	0.542	0.515	0.14	0.15	1.64	74	-1.2	1.37	75	-0.8	111	0.048	98	102	11.4	-0.2	646	614	358	466	459	509	988	396	80	70	81	71	79	-0.070	9.91	0.6
5	0.684	0.663	0.14	0.15	1.68	74	-1.2	1.41	74	-0.8	107	0.048	99	102	11.3	-0.1	663	611	357	466	462	512	1006	360	80	70	81	71	78	-0.066	9.76	0.96
6	0.828	0.810	0.14	0.15	1.75	74	-1.28	1.41	74	-0.8	105	0.048	101	101	11.1	-0.2	677	609	356	465	462	514	1028	348	80	70	81	71	79	-0.066	8.87	0.21
7	0.972	0.957	0.14	0.15	1.75	74	-1.27	1.39	74	-0.8	104	0.048	101	101	11.0	-0.1	690	607	356	464	462	516	1043	346	80	70	81	71	79	-0.066	9.3	0.35
8	1.117	1.104	0.15	0.15	1.73	74	-1.28	1.37	74	-0.8	103	0.048	101	101	10.9	-0.1	701	605	354	463	462	517	1041	338	81	70	81	71	79	-0.066	9.31	0.36
9	1.261	1.249	0.14	0.15	1.74	74	-1.27	1.35	73	-0.8	102	0.048	100	100	10.7	-0.2	710	602	353	462	461	518	1043	332	81	70	81	71	79	-0.065	9.34	0.33
10	1.404	1.395	0.14	0.15	1.73	74	-1.27	1.35	73	-0.8	102	0.048	100	101	10.6	-0.1	718	600	351	461	460	518	1045	326	81	70	81	71	79	-0.064	9.33	0.34
11	1.547	1.541	0.14	0.15	1.69	74	-1.26	1.33	73	-0.8	101	0.048	100	100	10.5	-0.1	725	597	349	460	459	518	1042	327	81	70	81	71	79	-0.064	9.23	0.37
12	1.690	1.687	0.14	0.15	1.69	74	-1.27	1.36	73	-0.8	101	0.048	100	100	10.3	-0.2	731	595	347	459	458	518	1042	326	81	71	81	71	79	-0.065	9.48	0.5
13	1.834	1.834	0.14	0.15	1.71	74	-1.27	1.38	73	-0.8	101	0.048	100	101	10.2	-0.1	736	593	345	458	458	518	1038	320	81	71	81	71	79	-0.064	9.6	0.68
14	1.977	1.979	0.14	0.15	1.73	74	-1.26	1.39	72	-0.8	101	0.048	100	100	10.1	-0.1	742	590	343	457	457	518	1040	317	81	71	81	71	78	-0.064	9.72	0.76
15	2.121	2.125	0.14	0.15	1.69	74	-1.25	1.37	72	-0.8	100	0.048	100	101	10.0	-0.1	747	588	342	457	455	518	1044	316	81	71	81	71	79	-0.064	9.71	0.73
16	2.263	2.270	0.14	0.15	1.71	74	-1.26	1.38	72	-0.8	100	0.048	99	100	9.8	-0.2	753	586	340	457	455	518	1043	314	81	71	81	71	79	-0.064	9.68	0.63
17	2.406	2.416	0.14	0.15	1.69	74	-1.25	1.37	72	-0.8	100	0.048	99	101	9.7	-0.1	758	584	338	456	454	518	1044	309	81	71	81	71	79	-0.063	9.71	0.72
18	2.548	2.561	0.14	0.15	1.67	74	-1.24	1.36	72	-0.8	100	0.048	99	100	9.6	-0.1	763	582	336	456	453	518	1048	312	81	72	82	71	80	-0.063	9.77	0.72
19	2.691	2.706	0.14	0.15	1.69	74	-1.25	1.34	72	-0.8	99	0.048	99	100	9.5	-0.1	768	580	335	457	453	519	1050	301	81	72	82	72	80	-0.063	9.86	0.8
20	2.835	2.851	0.14	0.15	1.70	74	-1.25	1.33	72	-0.8	99	0.048	100	100	9.3	-0.2	772	578	334	456	453	519	1054	301	81	72	82	72	80	-0.062	9.96	0.88
21	2.978	2.997	0.14	0.15	1.68	74	-1.24	1.32	72	-0.8	99	0.048	99	101	9.2	-0.1	777	576	332	457	453	519	1056	302	81	72	82	72	80	-0.062	9.84	0.96
22	3.121	3.143	0.14	0.15	1.70	74	-1.24	1.33	72	-0.8	99	0.048	99	101	9.1	-0.1	780	575	331	458	454	520	1055	295	81	73	82	72	79	-0.062	9.83	0.94
23	3.263	3.289	0.14	0.15	1.68	74	-1.25	1.33	72	-0.8	99	0.048	99	101	9.0	-0.1	783	573	329	458	454	519	1045	295	81	73	82	72	79	-0.061	9.64	0.66
24	3.405	3.436	0.14	0.15	1.66	74	-1.25	1.36	72	-0.8	98	0.048	99	101	8.9	-0.1	785	572	328	458	454	519	1033	287	81	73	82	72	79	-0.061	9.06	0.32
25	3.548	3.582	0.14	0.15	1.69	74	-1.24	1.37	72	-0.8	98	0.048	99	100	8.8	-0.1	786	570	327	459	454	519	1029	284	81	73	82	72	79	-0.061	8.23	0.01
26	3.692	3.729	0.14	0.15	1.70	74	-1.24	1.38	71	-0.8	97	0.048	100	101	8.7	-0.1	786	568	326	460	454	519	1021	278	81	74	82	72	79	-0.060	7.79	0
27	3.835	3.875	0.14	0.15	1.71	74	-1.24	1.36	71	-0.8	98	0.048	99	101	8.7	0	785	566	325	461	453	518	1025	281	81	74	82	72	79	-0.060	8.26	0
28	3.978	4.021	0.14	0.15	1.70	74	-1.25	1.36	71	-0.8	97	0.048	99	101	8.6	-0.1	785	564	324	463	454	518	1035	280	81	74	81	72	79	-0.060	9.63	0.32
29	4.121	4.166	0.14	0.15	1.69	74	-1.24	1.35	71	-0.8	97	0.048	99	100	8.5	-0.1	786	562	323	464	454	518	1038	278	80	74	77	73	79	-0.060	9.71	0.3
30	4.263	4.312	0.14	0.15	1.67	74	-1.24	1.34	71	-0.8	98	0.048	99	101	8.3	-0.2	778	560	315	464	453	514	1039	281	78	74	74	73	79	-0.061	9.88	0.47
31	4.406	4.457	0.14	0.15	1.66	73	-1.23	1.32	71	-0.8	98	0.048	100	100	8.2	-0.1	773	558	310	462	450	511	1036	290	76	74	72	73	79	-0.059	10.02	0.55
32	4.550	4.603	0.14	0.15	1.69	73	-1.24	1.31	71	-0.8	98	0.048	100	101	8.1	-0.1	770	555	304	460	447	507	1030	282	74	75	71	73	80	-0.059	10.1	0.53
33	4.693	4.749	0.14	0.15	1.70	74	-1.23	1.32	71	-0.8	98	0.048	99	101	8.1	0	766	553	299	459	445	504	1025	287	73	75	70	73	80	-0.059	9.95	0.56
34	4.837	4.895	0.14	0.15	1.70	74	-1.24	1.36	71	-0.8	98	0.048	100	101	7.9	-0.2	762	550	293	457	442	501	1024	286	72	75	69	73	80	-0.059	10.04	0.5
35	4.980	5.041	0.14	0.15	1.70	74	-1.25	1.36	71	-0.8	98	0.048	99	101	7.8	-0.1	759	548	288	456	441	498	1023	291	72	75	69	74	80	-0.059	9.92	0.5
36	5.123	5.186	0.14	0.15	1.68	74	-1.24	1.37	71	-0.8	98	0.048	99	100	7.7	-0.1	757	545	284	458	439	497	1024	295	71	75	68	74	80	-0.059	10	0.5

Wood Heater Test Data - ASTM E2780 / ASTM E2515

Run: 2

Manufacturer: Valley Comfort
Model: 20.2 Series
Tracking No.: 2253
Project No.: 0142WS013E
Test Date: 23-Aug-17
Beginning Clock Time: 10:24

Total Sampling Time: 175 min
Recording Interval: 1 min
Background Sample Volume: _____ cubic feet

Meter Box Y Factor: 1.003 (1) 0.997 (2) _____ (Amb)

Barometric Pressure:	Begin	Middle	End	Average
	28.72	28.71	28.70	28.71 "Hg

OMNI Equipment Numbers: 464,410,132,576,318,432,419,371,372,432,296-T55,567,413,592

PM Control Modules:
Dilution Tunnel MW(dry): 29.00 lb/lb-mole
Dilution Tunnel MW(wet): 28.78 lb/lb-mole
Dilution Tunnel H2O: 2.00 percent
Dilution Tunnel Static: -0.170 "H2O
Tunnel Area: 0.19635 ft2
Pitot Tube Cp: 0.99

Avg. Tunnel Velocity: 13.45 ft/sec.
Initial Tunnel Flow: 138.3 scfm
Average Tunnel Flow: 140.7 scfm
Post-Test Leak Check (1): 0.000 cfm @ -18 in. Hg
Post-Test Leak Check (2): 0.000 cfm @ -18 in. Hg
Average Test Piece Fuel Moisture: 22.30 Dry Basis %

Technician Signature: _____

Velocity Traverse Data

	Pt.1	Pt.2	Pt.3	Pt.4	Pt.5	Pt.6	Pt.7	Pt.8	Center	
Initial dP	0.028	0.044	0.042	0.026	0.032	0.046	0.044	0.030	0.048	"H2O
Temp:	99	99	99	99	99	99	99	99	99	°F

V_{strav} 13.45 ft/sec V_{scent} 15.25 ft/sec F_p 0.882

	Particulate Sampling Data														Fuel Weight (lb)		Temperature Data (°F)													Stack Gas Data		
Elapsed Time (min)	Gas Meter 1 (ft^3)	Gas Meter 2 (ft^3)	Sample Rate 1 (cfm)	Sample Rate 2 (cfm)	Orifice dH 1 ("H_2O)	Meter 1 Temp (°F)	Meter 1 Vacuum ("Hg)	Orifice dH 2 ("H_2O)	Meter 2 Temp (°F)	Meter 2 Vacuum ("Hg)	Dilution Tunnel (°F)	Dilution Tunnel Center dP	Pro. Rate 1	Pro. Rate 2	Scale Reading	Weight Change	Firebox Top	Firebox Bottom	Firebox Back	Firebox Left	Firebox Right	Avg. Stove Surface	Catalyst Exit	Stack	Filter 1	Dryer Exit 1	Filter 2	Dryer Exit 2	Ambient	Draft ("H_2O)	CO_2 (%)	CO (%)
37	5.265	5.332	0.14	0.15	1.66	74	-1.24	1.36	71	-0.8	99	0.048	99	101	7.6	-0.1	754	543	281	457	438	495	1024	298	71	76	68	74	80	-0.059	10.22	0.49
38	5.409	5.478	0.14	0.15	1.66	74	-1.24	1.35	71	-0.8	99	0.048	100	101	7.5	-0.1	752	540	279	458	437	493	1023	302	70	76	68	74	80	-0.060	10.29	0.6
39	5.553	5.623	0.14	0.15	1.69	74	-1.24	1.35	71	-0.8	99	0.048	100	100	7.4	-0.1	751	538	276	458	438	492	1020	305	70	76	68	74	80	-0.060	10.23	0.65
40	5.696	5.769	0.14	0.15	1.70	74	-1.23	1.34	71	-0.8	99	0.048	99	101	7.3	-0.1	749	536	274	460	437	491	1024	310	70	76	68	74	80	-0.061	9.89	0.67
41	5.840	5.914	0.14	0.15	1.70	74	-1.23	1.32	71	-0.8	99	0.048	100	100	7.2	-0.1	748	533	273	462	437	491	1032	310	70	76	68	75	80	-0.063	9.88	0.7
42	5.983	6.060	0.14	0.15	1.70	74	-1.23	1.33	71	-0.8	100	0.048	99	101	7.1	-0.1	747	531	272	465	437	490	1034	317	70	76	68	75	80	-0.061	9.97	0.64
43	6.127	6.205	0.14	0.15	1.69	74	-1.24	1.31	71	-0.8	100	0.048	100	100	6.9	-0.2	747	529	270	467	436	490	1036	319	70	77	68	75	80	-0.060	9.93	0.52
44	6.269	6.351	0.14	0.15	1.66	74	-1.24	1.33	71	-0.8	100	0.048	99	101	6.8	-0.1	746	526	270	468	435	489	1035	319	70	77	68	75	80	-0.060	10.16	0.43
45	6.413	6.497	0.14	0.15	1.67	74	-1.23	1.36	71	-0.8	100	0.048	100	101	6.7	-0.1	746	524	269	470	434	489	1033	322	70	77	68	75	80	-0.060	10.24	0.39
46	6.557	6.643	0.14	0.15	1.70	74	-1.23	1.37	71	-0.8	100	0.048	100	101	6.6	-0.1	746	522	268	471	433	488	1032	322	70	77	68	75	80	-0.061	10.13	0.43
47	6.700	6.789	0.14	0.15	1.70	74	-1.24	1.36	71	-0.8	100	0.048	99	101	6.5	-0.1	747	519	268	472	432	488	1030	325	70	77	68	76	80	-0.060	9.98	0.43
48	6.844	6.935	0.14	0.15	1.71	74	-1.24	1.37	71	-0.8	100	0.048	100	101	6.4	-0.1	746	517	268	473	431	487	1031	326	70	77	68	76	80	-0.060	9.84	0.41
49	6.988	7.081	0.14	0.15	1.71	74	-1.24	1.35	72	-0.8	100	0.048	100	101	6.3	-0.1	747	515	268	474	429	487	1033	324	70	77	68	76	80	-0.061	9.46	0.4
50	7.132	7.226	0.14	0.15	1.71	74	-1.24	1.35	72	-0.8	100	0.048	100	100	6.2	-0.1	748	514	269	477	427	487	1052	317	70	78	68	76	80	-0.060	9.61	0.14
51	7.275	7.372	0.14	0.15	1.68	75	-1.23	1.33	72	-0.8	100	0.048	99	101	6.1	-0.1	751	512	269	477	426	487	1067	326	70	78	69	76	81	-0.061	9.43	0.12
52	7.418	7.517	0.14	0.15	1.66	75	-1.23	1.33	72	-0.8	100	0.048	99	100	6.0	-0.1	752	511	269	478	425	487	1067	324	70	78	69	76	81	-0.061	9.42	0.11
53	7.562	7.660	0.14	0.14	1.69	75	-1.24	1.31	72	-0.8	100	0.048	100	99	5.9	-0.1	752	510	271	480	423	487	1066	318	70	78	69	76	80	-0.060	9.53	0.15
54	7.706	7.806	0.14	0.15	1.70	75	-1.23	1.31	72	-0.8	100	0.048	100	101	5.8	-0.1	751	509	272	480	422	487	1062	325	70	78	69	76	81	-0.061	9.41	0.21
55	7.849	7.952	0.14	0.15	1.70	75	-1.23	1.35	72	-0.8	100	0.048	99	101	5.7	-0.1	750	509	272	479	422	486	1065	328	70	78	69	77	80	-0.060	9.48	0.3
56	7.994	8.098	0.15	0.15	1.69	75	-1.23	1.36	72	-0.8	101	0.048	101	101	5.6	-0.1	750	508	273	477	422	486	1070	325	70	78	69	77	81	-0.061	9.48	0.23
57	8.137	8.244	0.14	0.15	1.70	75	-1.23	1.37	72	-0.8	101	0.048	99	101	5.5	-0.1	749	508	274	475	423	486	1063	322	71	78	70	77	81	-0.061	9.73	0.51
58	8.281	8.390	0.14	0.15	1.71	75	-1.24	1.36	72	-0.8	101	0.048	100	101	5.4	-0.1	749	508	275	473	425	486	1055	326	71	78	70	77	80	-0.061	9.78	0.72
59	8.424	8.536	0.14	0.15	1.68	75	-1.22	1.35	72	-0.8	101	0.048	99	101	5.3	-0.1	748	509	276	472	428	487	1053	330	71	79	70	77	80	-0.061	9.91	0.87
60	8.567	8.681	0.14	0.15	1.67	75	-1.23	1.34	72	-0.8	101	0.048	99	100	5.2	-0.1	748	509	276	471	430	487	1050	329	71	79	70	77	80	-0.061	9.82	0.87
61	8.713	8.827	0.15	0.15	1.72	75	-1.11	1.34	72	-0.8	101	0.048	101	101	5.1	-0.1	748	509	278	469	432	487	1049	329	71	79	70	77	81	-0.061	9.87	0.89
62	8.859	8.972	0.15	0.15	1.70	75	-1.18	1.33	72	-0.8	101	0.048	101	100	5.0	-0.1	748	509	279	469	436	488	1049	329	73	79	70	77	80	-0.061	10.12	0.99
63	9.004	9.118	0.15	0.15	1.72	75	-1.17	1.32	72	-0.8	102	0.048	101	101	4.9	-0.1	748	509	280	468	439	489	1047	334	74	79	71	78	81	-0.061	10.12	0.96
64	9.149	9.264	0.15	0.15	1.72	75	-1.18	1.32	72	-0.8	101	0.048	101	101	4.8	-0.1	748	510	282	466	442	490	1048	329	74	79	71	78	81	-0.059	9.97	0.79
65	9.293	9.410	0.14	0.15	1.72	75	-1.18	1.35	72	-0.8	101	0.048	100	101	4.7	-0.1	748	510	283	466	445	490	1044	322	75	79	71	78	80	-0.059	9.81	0.71
66	9.438	9.556	0.15	0.15	1.73	75	-1.18	1.37	72	-0.8	101	0.048	101	101	4.6	-0.1	747	510	284	467	447	491	1041	319	75	79	71	78	81	-0.059	9.84	0.61
67	9.584	9.702	0.15	0.15	1.71	75	-1.18	1.37	72	-0.8	101	0.048	101	101	4.4	-0.2	747	510	285	466	448	491	1042	318	76	79	71	78	80	-0.059	9.65	0.53
68	9.728	9.848	0.14	0.15	1.72	75	-1.17	1.36	72	-0.8	101	0.048	100	101	4.3	-0.1	747	510	286	466	448	491	1048	320	77	79	71	78	81	-0.060	9.67	0.63
69	9.873	9.994	0.15	0.15	1.73	75	-1.18	1.36	72	-0.8	101	0.048	101	101	4.2	-0.1	748	511	286	465	448	492	1049	319	77	80	71	78	81	-0.059	9.47	0.55
70	10.018	10.139	0.15	0.15	1.70	75	-1.17	1.35	72	-0.8	101	0.048	101	100	4.1	-0.1	748	511	285	465	447	491	1038	314	77	80	72	78	81	-0.059	9.51	0.48
71	10.162	10.285	0.14	0.15	1.69	75	-1.17	1.34	72	-0.8	100	0.048	100	101	4.1	0	747	511	285	463	447	491	1030	318	78	80	72	78	80	-0.059	9.57	0.63
72	10.306	10.430	0.14	0.15	1.68	75	-1.17	1.32	72	-0.8	100	0.048	100	100	4.0	-0.1	746	511	286	464	446	491	1024	318	78	80	72	78	81	-0.060	9.56	0.65
73	10.451	10.576	0.15	0.15	1.69	75	-1.17	1.32	72	-0.8	100	0.048	101	101	3.9	-0.1	745	512	287	463	445	490	1023	315	78	80	72	78	81	-0.059	9.48	0.6

Wood Heater Test Data - ASTM E2780 / ASTM E2515

Run: 2

Manufacturer: Valley Comfort
Model: 20.2 Series
Tracking No.: 2253
Project No.: 0142WS013E
Test Date: 23-Aug-17
Beginning Clock Time: 10:24

Total Sampling Time: 175 min
Recording Interval: 1 min
Background Sample Volume: _____ cubic feet

Meter Box Y Factor: 1.003 (1) 0.997 (2) _____ (Amb)

Barometric Pressure:	Begin	Middle	End	Average
	28.72	28.71	28.70	28.71 "Hg

OMNI Equipment Numbers: 464,410,132,576,318,432,419,371,372,432,296-T55,567,413,592

PM Control Modules:
Dilution Tunnel MW(dry): 29.00 lb/lb-mole
Dilution Tunnel MW(wet): 28.78 lb/lb-mole
Dilution Tunnel H2O: 2.00 percent
Dilution Tunnel Static: -0.170 "H2O
Tunnel Area: 0.19635 ft2
Pitot Tube Cp: 0.99

Avg. Tunnel Velocity: 13.45 ft/sec.
Initial Tunnel Flow: 138.3 scfm
Average Tunnel Flow: 140.7 scfm
Post-Test Leak Check (1): 0.000 cfm @ -18 in. Hg
Post-Test Leak Check (2): 0.000 cfm @ -18 in. Hg
Average Test Piece Fuel Moisture: 22.30 Dry Basis %

Technician Signature: _____

Velocity Traverse Data

	Pt.1	Pt.2	Pt.3	Pt.4	Pt.5	Pt.6	Pt.7	Pt.8	Center	
Initial dP	0.028	0.044	0.042	0.026	0.032	0.046	0.044	0.030	0.048	"H2O
Temp:	99	99	99	99	99	99	99	99	99	°F

V_{strav} 13.45 ft/sec V_{scent} 15.25 ft/sec F_p 0.882

	Particulate Sampling Data														Fuel Weight (lb)		Temperature Data (°F)													Stack Gas Data		
Elapsed Time (min)	Gas Meter 1 (ft^3)	Gas Meter 2 (ft^3)	Sample Rate 1 (cfm)	Sample Rate 2 (cfm)	Orifice dH 1 ("H_2O)	Meter 1 Temp (°F)	Meter 1 Vacuum ("Hg)	Orifice dH 2 ("H_2O)	Meter 2 Temp (°F)	Meter 2 Vacuum ("Hg)	Dilution Tunnel (°F)	Dilution Tunnel Center dP	Pro. Rate 1	Pro. Rate 2	Scale Reading	Weight Change	Firebox Top	Firebox Bottom	Firebox Back	Firebox Left	Firebox Right	Avg. Stove Surface	Catalyst Exit	Stack	Filter 1	Dryer Exit 1	Filter 2	Dryer Exit 2	Ambient	Draft ("H_2O)	CO_2 (%)	CO (%)
74	10.596	10.722	0.15	0.15	1.71	75	-1.18	1.31	72	-0.8	100	0.048	101	101	3.8	-0.1	745	512	287	462	444	490	1028	309	79	80	72	79	80	-0.060	9.55	0.53
75	10.741	10.868	0.15	0.15	1.71	75	-1.18	1.34	72	-0.8	100	0.048	101	101	3.7	-0.1	745	513	287	463	444	490	1032	309	79	80	72	79	81	-0.058	9.5	0.52
76	10.886	11.014	0.15	0.15	1.72	75	-1.17	1.36	72	-0.8	100	0.048	101	101	3.7	0	746	514	288	461	444	491	1033	306	79	80	72	79	81	-0.058	9.47	0.45
77	11.031	11.160	0.15	0.15	1.73	75	-1.18	1.37	72	-0.8	100	0.048	101	101	3.6	-0.1	746	515	289	461	444	491	1035	309	79	80	72	79	81	-0.058	9.44	0.42
78	11.176	11.306	0.15	0.15	1.73	75	-1.18	1.36	72	-0.8	100	0.048	101	101	3.5	-0.1	746	516	289	460	445	491	1037	308	80	80	72	79	81	-0.058	9.41	0.36
79	11.321	11.452	0.15	0.15	1.73	75	-1.17	1.36	72	-0.9	100	0.048	101	101	3.4	-0.1	744	517	290	460	446	491	1035	316	80	80	72	79	81	-0.058	9.38	0.33
80	11.466	11.597	0.15	0.15	1.71	75	-1.17	1.35	72	-0.9	100	0.048	101	100	3.4	0	742	519	292	459	447	492	1029	311	80	80	73	79	81	-0.058	9.34	0.3
81	11.611	11.743	0.15	0.15	1.72	75	-1.17	1.33	72	-0.9	99	0.048	101	101	3.3	-0.1	740	520	293	458	447	492	1024	308	80	80	73	79	80	-0.057	9.27	0.27
82	11.755	11.889	0.14	0.15	1.73	75	-1.18	1.33	72	-0.9	99	0.048	100	101	3.2	-0.1	738	522	295	458	449	492	1019	300	80	80	73	79	81	-0.057	9.3	0.26
83	11.900	12.035	0.15	0.15	1.71	75	-1.17	1.31	72	-0.9	99	0.048	101	101	3.1	-0.1	734	524	297	458	451	493	1013	298	80	80	73	79	80	-0.057	9.34	0.27
84	12.044	12.180	0.14	0.15	1.69	75	-1.18	1.32	73	-0.9	99	0.048	100	100	3.1	0	730	525	298	457	452	492	1005	300	80	80	73	79	81	-0.057	9.38	0.29
85	12.189	12.327	0.15	0.15	1.69	75	-1.18	1.36	73	-0.9	99	0.048	101	101	3.0	-0.1	726	527	300	457	454	493	998	296	81	80	73	79	81	-0.057	9.42	0.27
86	12.334	12.473	0.15	0.15	1.69	75	-1.18	1.36	73	-0.9	99	0.048	101	100	3.0	0	723	529	302	457	455	493	993	298	81	80	73	79	81	-0.057	9.44	0.28
87	12.479	12.619	0.15	0.15	1.70	75	-1.18	1.37	73	-0.9	99	0.048	101	100	2.9	-0.1	719	531	304	458	456	494	990	290	81	80	73	79	81	-0.057	9.36	0.3
88	12.624	12.765	0.15	0.15	1.71	75	-1.17	1.36	72	-0.9	99	0.048	101	101	2.8	-0.1	717	533	307	457	458	494	987	296	81	80	73	79	81	-0.056	9.59	0.31
89	12.769	12.911	0.15	0.15	1.72	75	-1.18	1.35	72	-0.9	99	0.048	101	101	2.8	0	713	535	309	458	460	495	987	297	81	80	73	79	81	-0.056	9.57	0.37
90	12.913	13.057	0.14	0.15	1.72	75	-1.17	1.33	72	-0.9	99	0.048	100	101	2.7	-0.1	711	537	310	458	461	495	989	296	81	80	73	79	81	-0.056	9.7	0.4
91	13.059	13.202	0.15	0.15	1.70	75	-1.17	1.33	72	-0.9	99	0.048	101	100	2.6	-0.1	711	539	313	459	462	497	989	294	81	80	73	79	81	-0.056	9.67	0.47
92	13.204	13.348	0.15	0.15	1.71	75	-1.18	1.33	73	-0.9	98	0.048	101	100	2.6	0	709	541	315	460	463	498	985	294	81	80	73	79	81	-0.056	9.58	0.5
93	13.348	13.494	0.14	0.15	1.72	75	-1.18	1.31	73	-0.9	99	0.048	100	100	2.5	-0.1	707	543	317	461	465	499	985	288	81	80	74	79	81	-0.056	9.64	0.4
94	13.493	13.640	0.15	0.15	1.72	75	-1.18	1.33	73	-0.9	98	0.048	101	100	2.4	-0.1	705	545	318	464	466	500	984	285	81	80	74	80	81	-0.056	9.6	0.13
95	13.638	13.786	0.15	0.15	1.70	75	-1.17	1.36	73	-0.9	98	0.048	101	100	2.4	0	703	547	321	467	467	501	979	282	81	80	74	80	81	-0.055	9.24	0.04
96	13.782	13.932	0.14	0.15	1.69	75	-1.17	1.37	73	-0.9	98	0.048	100	100	2.4	0	699	549	322	469	469	502	959	287	81	80	74	80	81	-0.055	8.99	0
97	13.927	14.078	0.15	0.15	1.68	75	-1.18	1.36	73	-0.9	97	0.048	100	100	2.3	-0.1	695	551	324	472	470	502	940	282	81	80	74	80	81	-0.055	8.88	0
98	14.071	14.225	0.14	0.15	1.70	75	-1.18	1.36	73	-0.9	97	0.048	100	101	2.2	-0.1	689	553	325	475	471	503	928	284	81	80	74	80	81	-0.055	8.95	-0.01
99	14.217	14.370	0.15	0.15	1.71	75	-1.18	1.35	73	-0.9	97	0.048	101	99	2.2	0	683	554	327	477	472	503	918	276	81	80	74	80	81	-0.055	8.84	-0.01
100	14.362	14.516	0.15	0.15	1.71	76	-1.19	1.33	73	-0.9	97	0.048	100	100	2.1	-0.1	678	556	328	479	473	503	910	279	82	79	74	79	80	-0.054	8.8	-0.01
101	14.507	14.662	0.15	0.15	1.72	76	-1.18	1.33	73	-0.9	97	0.048	100	100	2.1	0	674	557	329	481	474	503	903	272	81	80	74	80	81	-0.054	8.68	-0.01
102	14.652	14.808	0.15	0.15	1.73	76	-1.18	1.31	73	-0.9	97	0.048	100	100	2.1	0	669	559	330	483	475	503	896	272	82	80	74	79	81	-0.054	8.68	-0.01
103	14.797	14.955	0.15	0.15	1.73	76	-1.18	1.34	73	-0.9	97	0.048	100	101	2.0	-0.1	664	560	331	484	475	503	890	274	82	80	74	79	81	-0.053	8.68	-0.01
104	14.942	15.101	0.15	0.15	1.73	75	-1.18	1.35	73	-0.9	97	0.048	100	100	2.0	0	659	562	333	485	475	503	884	268	82	80	74	79	81	-0.053	8.62	-0.01
105	15.087	15.247	0.15	0.15	1.73	76	-1.18	1.37	73	-0.9	97	0.048	100	100	1.9	-0.1	655	563	333	486	476	503	880	267	82	79	74	78	81	-0.052	8.66	-0.01
106	15.232	15.394	0.15	0.15	1.72	76	-1.18	1.36	73	-0.9	96	0.048	100	101	1.9	0	651	564	334	486	476	502	876	266	82	79	74	78	81	-0.053	8.56	-0.01
107	15.377	15.540	0.15	0.15	1.72	76	-1.18	1.35	73	-0.9	96	0.048	100	100	1.8	-0.1	648	565	336	486	476	502	871	266	82	78	74	78	81	-0.052	8.76	-0.01
108	15.522	15.686	0.15	0.15	1.71	76	-1.17	1.34	73	-0.9	96	0.048	100	100	1.8	0	644	566	336	487	476	502	868	268	82	78	74	78	81	-0.052	8.74	-0.01
109	15.666	15.832	0.14	0.15	1.68	76	-1.18	1.33	73	-0.9	97	0.048	100	100	1.7	-0.1	641	567	337	488	476	502	866	268	82	78	74	78	81	-0.051	9.06	-0.01
110	15.811	15.978	0.15	0.15	1.69	76	-1.17	1.33	73	-0.9	96	0.048	100	100	1.7	0	638	568	338	489	476	502	866	269	82	78	74	78	80	-0.052	9.02	-0.01

Wood Heater Test Data - ASTM E2780 / ASTM E2515

Run: 2

Manufacturer: Valley Comfort
Model: 20.2 Series
Tracking No.: 2253
Project No.: 0142WS013E
Test Date: 23-Aug-17
Beginning Clock Time: 10:24

Total Sampling Time: 175 min
Recording Interval: 1 min
Background Sample Volume: _____ cubic feet

Meter Box Y Factor: 1.003 (1) 0.997 (2) _____ (Amb)

Barometric Pressure:	Begin	Middle	End	Average
	28.72	28.71	28.70	28.71 "Hg

OMNI Equipment Numbers: 464,410,132,576,318,432,419,371,372,432,296-T55,567,413,592

PM Control Modules:
Dilution Tunnel MW(dry): 29.00 lb/lb-mole
Dilution Tunnel MW(wet): 28.78 lb/lb-mole
Dilution Tunnel H2O: 2.00 percent
Dilution Tunnel Static: -0.170 "H2O
Tunnel Area: 0.19635 ft2
Pitot Tube Cp: 0.99

Avg. Tunnel Velocity: 13.45 ft/sec.
Initial Tunnel Flow: 138.3 scfm
Average Tunnel Flow: 140.7 scfm
Post-Test Leak Check (1): 0.000 cfm @ -18 in. Hg
Post-Test Leak Check (2): 0.000 cfm @ -18 in. Hg
Average Test Piece Fuel Moisture: 22.30 Dry Basis %

Technician Signature: _____

Velocity Traverse Data

	Pt.1	Pt.2	Pt.3	Pt.4	Pt.5	Pt.6	Pt.7	Pt.8	Center	
Initial dP	0.028	0.044	0.042	0.026	0.032	0.046	0.044	0.030	0.048	"H2O
Temp:	99	99	99	99	99	99	99	99	99	°F

V_{strav} 13.45 ft/sec V_{scent} 15.25 ft/sec F_p 0.882

	Particulate Sampling Data														Fuel Weight (lb)		Temperature Data (°F)													Stack Gas Data		
Elapsed Time (min)	Gas Meter 1 (ft^3)	Gas Meter 2 (ft^3)	Sample Rate 1 (cfm)	Sample Rate 2 (cfm)	Orifice dH 1 ("H_2O)	Meter 1 Temp (°F)	Meter 1 Vacuum ("Hg)	Orifice dH 2 ("H_2O)	Meter 2 Temp (°F)	Meter 2 Vacuum ("Hg)	Dilution Tunnel (°F)	Dilution Tunnel Center dP	Pro. Rate 1	Pro. Rate 2	Scale Reading	Weight Change	Firebox Top	Firebox Bottom	Firebox Back	Firebox Left	Firebox Right	Avg. Stove Surface	Catalyst Exit	Stack	Filter 1	Dryer Exit 1	Filter 2	Dryer Exit 2	Ambient	Draft ("H_2O)	CO_2 (%)	CO (%)
111	15.956	16.124	0.15	0.15	1.69	76	-1.17	1.31	73	-0.9	96	0.048	100	100	1.7	0	636	568	339	489	476	502	864	269	82	78	74	77	81	-0.052	8.7	-0.01
112	16.101	16.270	0.15	0.15	1.71	76	-1.17	1.33	73	-0.9	96	0.048	100	100	1.6	-0.1	633	569	340	490	476	502	860	261	82	78	74	77	81	-0.052	8.4	-0.01
113	16.246	16.417	0.15	0.15	1.72	76	-1.18	1.35	73	-0.9	96	0.048	100	101	1.6	0	631	569	341	490	475	501	854	260	82	77	74	77	81	-0.051	7.9	-0.01
114	16.391	16.563	0.15	0.15	1.71	76	-1.18	1.37	73	-0.9	96	0.048	100	100	1.5	-0.1	628	570	341	488	473	500	849	257	82	77	74	77	81	-0.051	7.81	-0.01
115	16.536	16.709	0.15	0.15	1.72	76	-1.18	1.35	73	-0.9	96	0.048	100	100	1.5	0	625	570	342	487	471	499	843	260	82	77	74	77	81	-0.051	7.68	-0.01
116	16.681	16.855	0.15	0.15	1.72	76	-1.18	1.35	73	-0.9	96	0.048	100	100	1.5	0	621	571	342	484	469	497	838	255	82	77	74	77	81	-0.050	7.67	-0.01
117	16.826	17.001	0.15	0.15	1.71	76	-1.17	1.35	73	-0.9	96	0.048	100	100	1.5	0	618	572	342	483	466	496	833	257	82	77	74	77	81	-0.051	7.54	-0.01
118	16.972	17.147	0.15	0.15	1.70	76	-1.17	1.34	74	-0.9	95	0.048	101	100	1.4	-0.1	615	572	342	482	464	495	830	257	82	77	74	77	81	-0.051	7.61	-0.01
119	17.116	17.293	0.14	0.15	1.72	76	-1.17	1.32	74	-0.9	95	0.048	99	100	1.4	0	611	573	342	480	463	494	827	256	82	77	74	77	81	-0.051	7.68	-0.01
120	17.261	17.439	0.15	0.15	1.72	76	-1.18	1.33	74	-0.9	96	0.048	100	100	1.4	0	608	574	342	479	461	493	824	257	82	77	74	76	81	-0.050	7.63	-0.01
121	17.406	17.586	0.15	0.15	1.71	76	-1.18	1.35	74	-0.9	96	0.048	100	101	1.4	0	605	575	342	478	460	492	822	258	82	77	74	76	81	-0.051	7.6	-0.01
122	17.551	17.733	0.15	0.15	1.70	77	-1.17	1.37	74	-0.9	96	0.048	100	101	1.3	-0.1	602	575	341	477	458	491	820	252	82	76	74	76	81	-0.050	7.57	-0.01
123	17.695	17.879	0.14	0.15	1.69	77	-1.17	1.37	74	-0.9	96	0.048	99	100	1.3	0	601	576	340	478	457	490	815	258	82	76	74	76	82	-0.051	6.03	-0.01
124	17.840	18.026	0.15	0.15	1.69	77	-1.18	1.36	74	-0.9	96	0.048	100	101	1.3	0	597	577	340	476	456	489	809	257	82	76	74	76	82	-0.051	5.88	-0.01
125	17.985	18.172	0.15	0.15	1.69	77	-1.17	1.35	74	-0.9	96	0.048	100	100	1.2	-0.1	594	577	339	476	454	488	805	258	82	76	75	76	81	-0.051	5.84	-0.01
126	18.130	18.318	0.15	0.15	1.71	77	-1.17	1.34	74	-0.9	96	0.048	100	100	1.2	0	590	577	337	471	452	485	803	259	82	76	75	76	81	-0.051	5.9	-0.01
127	18.276	18.464	0.15	0.15	1.71	77	-1.17	1.32	75	-0.9	96	0.048	101	100	1.2	0	587	577	335	470	449	484	803	257	82	76	75	76	81	-0.051	5.96	-0.01
128	18.420	18.611	0.14	0.15	1.72	77	-1.18	1.33	75	-0.9	96	0.048	99	100	1.2	0	584	577	334	467	446	482	802	257	82	76	75	77	80	-0.051	5.89	-0.01
129	18.566	18.758	0.15	0.15	1.72	77	-1.18	1.34	75	-0.9	96	0.048	101	100	1.1	-0.1	582	576	332	464	444	480	801	259	82	76	75	77	80	-0.051	5.9	-0.01
130	18.711	18.905	0.15	0.15	1.71	77	-1.18	1.37	75	-0.9	96	0.048	100	100	1.1	0	579	576	329	461	441	477	800	257	82	76	75	77	81	-0.051	5.95	-0.01
131	18.857	19.051	0.15	0.15	1.71	77	-1.17	1.36	75	-0.9	96	0.048	101	100	1.1	0	576	576	327	459	438	475	798	257	82	76	75	77	80	-0.051	6.03	-0.01
132	19.002	19.198	0.15	0.15	1.71	77	-1.18	1.36	76	-0.9	96	0.048	100	100	1.1	0	573	576	325	456	436	473	796	262	82	76	75	77	80	-0.051	6.13	-0.01
133	19.147	19.345	0.15	0.15	1.73	77	-1.17	1.34	76	-0.9	96	0.048	100	100	1.1	0	571	576	323	453	434	471	795	258	82	76	75	77	80	-0.051	6.18	-0.01
134	19.292	19.491	0.15	0.15	1.72	77	-1.18	1.33	76	-0.9	96	0.048	100	99	1.0	-0.1	568	576	321	451	431	469	794	261	82	76	75	77	80	-0.051	6.18	-0.01
135	19.437	19.637	0.15	0.15	1.71	77	-1.17	1.33	76	-0.9	96	0.048	100	99	1.0	0	566	576	320	449	430	468	792	257	82	76	75	77	79	-0.052	6.28	-0.01
136	19.581	19.785	0.14	0.15	1.70	77	-1.16	1.34	76	-0.9	96	0.048	99	101	1.0	0	564	576	319	447	428	467	791	261	82	76	75	77	79	-0.051	6.2	-0.01
137	19.726	19.932	0.15	0.15	1.69	77	-1.17	1.37	76	-0.9	96	0.048	100	100	1.0	0	561	577	317	445	426	465	789	265	82	76	75	77	79	-0.051	6.33	-0.01
138	19.871	20.079	0.15	0.15	1.69	77	-1.18	1.37	76	-0.9	96	0.048	100	100	0.9	-0.1	559	577	317	444	425	464	789	272	82	76	75	77	79	-0.051	6.22	-0.01
139	20.017	20.226	0.15	0.15	1.69	77	-1.18	1.36	76	-0.9	96	0.048	101	100	0.9	0	557	577	315	442	424	463	787	267	82	76	75	77	79	-0.051	6.29	-0.01
140	20.162	20.372	0.15	0.15	1.72	77	-1.18	1.34	76	-0.9	97	0.048	100	100	0.9	0	556	577	314	440	422	462	785	276	82	76	75	77	79	-0.051	6.31	-0.01
141	20.307	20.519	0.15	0.15	1.72	77	-1.17	1.35	76	-0.9	96	0.048	100	100	0.9	0	554	577	313	438	421	461	784	270	82	76	75	77	79	-0.051	6.27	-0.01
142	20.453	20.665	0.15	0.15	1.72	77	-1.17	1.32	76	-0.9	96	0.048	101	99	0.8	-0.1	552	578	312	437	421	460	784	271	81	76	75	77	80	-0.052	6.17	-0.01
143	20.598	20.813	0.15	0.15	1.72	77	-1.18	1.35	76	-0.9	97	0.048	100	101	0.8	0	551	578	312	436	420	459	783	275	81	76	75	77	80	-0.051	6.24	-0.01
144	20.743	20.960	0.15	0.15	1.73	77	-1.17	1.38	76	-0.9	96	0.048	100	100	0.8	0	549	578	311	434	419	458	784	271	81	76	75	77	80	-0.052	6.22	-0.01
145	20.889	21.107	0.15	0.15	1.73	77	-1.16	1.37	76	-0.9	97	0.048	101	100	0.8	0	547	579	311	435	418	458	783	272	81	76	75	77	80	-0.051	6.26	-0.01
146	21.034	21.254	0.15	0.15	1.72	77	-1.17	1.36	76	-0.9	97	0.048	100	100	0.7	-0.1	546	580	311	433	417	457	783	271	81	76	75	77	80	-0.052	6.27	-0.01
147	21.180	21.401	0.15	0.15	1.73	77	-1.17	1.35	76	-0.9	97	0.048	101	100	0.7	0	545	580	310	432	416	457	783	274	81	76	75	77	79	-0.052	6.25	-0.01

Wood Heater Test Data - ASTM E2780 / ASTM E2515

Run: 2

Manufacturer: Valley Comfort
Model: 20.2 Series
Tracking No.: 2253
Project No.: 0142WS013E
Test Date: 23-Aug-17
Beginning Clock Time: 10:24

Total Sampling Time: 175 min
Recording Interval: 1 min
Background Sample Volume: _____ cubic feet

Meter Box Y Factor: 1.003 (1) 0.997 (2) _____ (Amb)

Barometric Pressure:	Begin	Middle	End	Average
	28.72	28.71	28.70	28.71 "Hg

OMNI Equipment Numbers: 464,410,132,576,318,432,419,371,372,432,296-T55,567,413,592

PM Control Modules:
Dilution Tunnel MW(dry): 29.00 lb/lb-mole
Dilution Tunnel MW(wet): 28.78 lb/lb-mole
Dilution Tunnel H2O: 2.00 percent
Dilution Tunnel Static: -0.170 "H2O
Tunnel Area: 0.19635 ft2
Pitot Tube Cp: 0.99

Avg. Tunnel Velocity: 13.45 ft/sec.
Initial Tunnel Flow: 138.3 scfm
Average Tunnel Flow: 140.7 scfm
Post-Test Leak Check (1): 0.000 cfm @ -18 in. Hg
Post-Test Leak Check (2): 0.000 cfm @ -18 in. Hg
Average Test Piece Fuel Moisture: 22.30 Dry Basis %

Technician Signature: _____

Velocity Traverse Data

	Pt.1	Pt.2	Pt.3	Pt.4	Pt.5	Pt.6	Pt.7	Pt.8	Center	
Initial dP	0.028	0.044	0.042	0.026	0.032	0.046	0.044	0.030	0.048	"H2O
Temp:	99	99	99	99	99	99	99	99	99	°F

V_{strav} 13.45 ft/sec V_{scent} 15.25 ft/sec F_p 0.882

Elapsed Time (min)	Particulate Sampling Data: Gas Meter 1 (ft^3)	Gas Meter 2 (ft^3)	Sample Rate 1 (cfm)	Sample Rate 2 (cfm)	Orifice dH 1 ("H_2O)	Meter 1 Temp (°F)	Meter 1 Vacuum ("Hg)	Orifice dH 2 ("H_2O)	Meter 2 Temp (°F)	Meter 2 Vacuum ("Hg)	Dilution Tunnel (°F)	Dilution Tunnel Center dP	Pro. Rate 1	Pro. Rate 2	Fuel Weight (lb): Scale Reading	Weight Change	Temperature Data (°F): Firebox Top	Firebox Bottom	Firebox Back	Firebox Left	Firebox Right	Avg. Stove Surface	Catalyst Exit	Stack	Filter 1	Dryer Exit 1	Filter 2	Dryer Exit 2	Ambient	Stack Gas Data: Draft ("H_2O)	CO_2 (%)	CO (%)
148	21.325	21.547	0.15	0.15	1.72	77	-1.17	1.34	76	-0.9	97	0.048	100	100	0.7	0	545	581	309	431	415	456	785	270	81	75	75	77	81	-0.052	6.25	-0.01
149	21.470	21.694	0.15	0.15	1.73	77	-1.17	1.32	76	-0.9	97	0.048	100	100	0.7	0	544	582	308	431	415	456	785	271	81	75	74	76	80	-0.052	6.2	-0.01
150	21.615	21.842	0.15	0.15	1.73	77	-1.17	1.36	76	-0.9	97	0.048	100	101	0.6	-0.1	542	583	309	430	414	456	784	279	81	75	74	76	80	-0.052	6.26	-0.01
151	21.760	21.989	0.15	0.15	1.69	77	-1.16	1.38	76	-0.9	97	0.048	100	100	0.6	0	541	584	309	429	413	455	784	276	81	75	74	77	80	-0.052	6.12	-0.01
152	21.905	22.136	0.15	0.15	1.68	77	-1.17	1.36	76	-0.9	97	0.048	100	100	0.6	0	540	585	309	429	412	455	784	278	81	75	74	76	79	-0.052	6.24	-0.01
153	22.050	22.282	0.15	0.15	1.69	77	-1.18	1.36	76	-0.9	97	0.048	100	100	0.6	0	540	585	309	428	411	455	783	279	81	75	74	77	79	-0.052	6.16	-0.01
154	22.195	22.428	0.15	0.15	1.70	77	-1.17	1.35	76	-0.9	97	0.048	100	100	0.6	0	539	586	308	429	411	455	782	280	81	75	74	76	79	-0.052	6.15	-0.01
155	22.341	22.574	0.15	0.15	1.71	77	-1.18	1.34	76	-0.9	97	0.048	101	100	0.5	-0.1	539	586	308	428	410	454	784	278	81	75	74	77	79	-0.052	6.12	-0.01
156	22.486	22.720	0.15	0.15	1.72	77	-1.17	1.33	76	-0.9	97	0.048	100	100	0.5	0	539	586	308	428	409	454	786	281	81	75	74	76	79	-0.053	5.86	-0.01
157	22.632	22.866	0.15	0.15	1.71	77	-1.18	1.37	76	-0.9	97	0.048	101	100	0.5	0	538	586	308	429	408	454	787	279	81	75	74	76	79	-0.052	5.82	-0.01
158	22.777	23.012	0.15	0.15	1.72	77	-1.18	1.38	76	-0.9	97	0.048	100	100	0.5	0	537	586	308	428	407	453	785	277	81	75	74	76	80	-0.052	5.58	-0.01
159	22.922	23.158	0.15	0.15	1.72	77	-1.18	1.36	76	-0.9	97	0.048	100	100	0.4	-0.1	537	586	308	428	406	453	784	279	81	75	74	76	80	-0.053	5.52	-0.01
160	23.068	23.304	0.15	0.15	1.73	77	-1.17	1.36	76	-0.9	97	0.048	101	100	0.4	0	535	587	308	427	404	452	784	276	81	75	74	76	80	-0.053	5.49	-0.01
161	23.213	23.450	0.15	0.15	1.70	77	-1.17	1.35	76	-0.9	97	0.048	100	100	0.4	0	535	587	307	426	404	452	784	279	81	75	74	76	80	-0.053	5.52	-0.01
162	23.359	23.596	0.15	0.15	1.71	77	-1.18	1.33	76	-0.9	97	0.048	101	100	0.4	0	534	587	306	426	402	451	786	279	81	75	74	76	79	-0.053	5.58	-0.01
163	23.504	23.742	0.15	0.15	1.72	77	-1.17	1.35	76	-0.9	97	0.048	100	100	0.3	-0.1	534	587	305	425	402	451	786	285	81	75	74	76	80	-0.053	5.57	-0.01
164	23.649	23.888	0.15	0.15	1.72	77	-1.17	1.38	76	-0.9	97	0.048	100	100	0.3	0	533	587	304	423	400	449	787	282	81	75	74	76	80	-0.053	5.33	-0.01
165	23.795	24.034	0.15	0.15	1.72	77	-1.17	1.36	77	-0.9	97	0.048	101	99	0.3	0	532	587	304	422	398	449	787	275	81	75	74	77	80	-0.054	5.3	-0.01
166	23.940	24.180	0.15	0.15	1.72	77	-1.17	1.36	76	-0.9	97	0.048	100	100	0.3	0	532	587	304	421	397	448	787	276	81	75	74	77	80	-0.054	5.3	-0.01
167	24.085	24.326	0.15	0.15	1.71	77	-1.18	1.35	76	-0.9	97	0.048	100	100	0.3	0	531	586	302	420	395	447	787	280	81	75	74	76	80	-0.054	5.33	-0.01
168	24.230	24.472	0.15	0.15	1.69	77	-1.17	1.37	76	-0.9	97	0.048	100	100	0.2	-0.1	531	586	301	418	393	446	786	285	81	75	74	77	79	-0.053	5.35	-0.01
169	24.375	24.618	0.15	0.15	1.69	77	-1.17	1.36	76	-0.9	97	0.048	100	100	0.2	0	530	585	300	417	392	445	785	285	81	75	74	77	80	-0.054	5.29	-0.01
170	24.520	24.764	0.15	0.15	1.69	77	-1.18	1.36	76	-0.9	97	0.048	100	100	0.2	0	530	585	299	416	391	444	785	279	81	75	74	77	79	-0.054	5.4	-0.01
171	24.666	24.910	0.15	0.15	1.69	77	-1.17	1.34	76	-0.9	97	0.048	101	100	0.2	0	530	584	298	414	390	443	786	288	81	75	74	77	80	-0.054	5.38	-0.01
172	24.811	25.056	0.15	0.15	1.71	77	-1.18	1.35	76	-0.9	97	0.048	100	100	0.1	-0.1	529	583	296	414	389	442	786	284	81	75	74	77	79	-0.054	5.45	-0.01
173	24.957	25.202	0.15	0.15	1.72	77	-1.19	1.37	76	-0.9	97	0.048	101	100	0.1	0	528	583	295	413	387	441	786	290	81	74	74	77	79	-0.054	5.59	-0.01
174	25.102	25.348	0.15	0.15	1.72	77	-1.18	1.36	76	-0.9	97	0.048	100	100	0.1	0	528	582	294	412	387	441	784	286	81	74	74	77	79	-0.054	5.46	-0.01
175	25.248	25.494	0.15	0.15	1.73	77	-1.18	1.34	76	-0.9	97	0.048	101	100	0.0	-0.1	527	581	292	411	386	439	782	284	81	74	74	77	80	-0.054	5.47	-0.01
Avg/Tot	25.248	25.494	0.14	0.15	1.70	75		1.35	73		99	0.048	100	100								60.8				76	74	76	80	-0.057		

Wood Heater Lab Data - ASTM E2780 / ASTM E2515

Manufacturer:	Valley Comfort	Equipment Numbers:	283A, 637, 592
Model:	20.2 Series		
Tracking No.:	2253		
Project No.:	0142WS013E		
Run #:	2		
Date:	8/23/17		

TRAIN 1 (First Hour emissions)

Sample Component	Reagent	Filter, Probe or Dish #	Weights		
			Final, mg	Tare, mg	Particulate, mg
B. Front filter catch	Filter	D231	123.0	121.5	1.5
C. Rear filter catch	Filter				0.0
D. Probe catch*	Probe				0.0
E. Filter seals catch*	Seals				0.0

Sub-Total	Total Particulate, mg:	1.5

TRAIN 1 (Post First Hour Change-out)

Sample Component	Reagent	Filter, Probe or Dish #	Weights		
			Final, mg	Tare, mg	Particulate, mg
B. Front filter catch	Filter	D232	122.9	122.0	0.9
C. Rear filter catch	Filter	D233	120.3	120.5	-0.2
D. Probe catch*	Probe	27	114274.9	114274.9	0.0
E. Filter seals catch*	Seals	R503	3298.8	3298.5	0.3

Sub-Total	Total Particulate, mg:	1.0
Train 1 Aggregate	Total Particulate, mg:	2.5

TRAIN 2

Sample Component	Reagent	Filter, Probe or Dish #	Weights		
			Final, mg	Tare, mg	Particulate, mg
A. Front filter catch	Filter	D234	123.9	121.9	2.0
B. Rear filter catch	Filter	D235	121.1	121.2	-0.1
C. Probe catch*	Probe	29	114278.9	114278.7	0.2
D. Filter seals catch*	Seals	R504	3384.9	3384.0	0.9

Total Particulate, mg:	3.0

AMBIENT

Sample Component	Reagent	Filter # or Probe #	Weights		
			Final, mg	Tare, mg	Particulate, mg
A. Front filter catch*	Filter				0.0

Total Particulate, mg:	0.0

*Particulate catch that results in a negative number, is assumed to be zero for probes and seals, negative numbers for filters are assumed to be part of the seal weight.

Component	Equations:
A. Front filter catch	Final (mg) - Tare (mg) = Particulate, mg
B. Rear filter catch	Final (mg) - Tare (mg) = Particulate, mg
C. Probe catch	Final (mg) - Tare (mg) = Particulate, mg

Technician Signature:

Wood Heater Test Results - ASTM E2780 / ASTM E2515

Manufacturer:	Valley Comfort
Model:	20.2 Series
Project No.:	0142WS013E
Tracking No.:	2253
Run:	2
Test Date:	08/23/17

Burn Rate	1.54 kg/hr dry
Average Tunnel Temperature	99 degrees Fahrenheit
Average Gas Velocity in Dilution Tunnel - vs	13.45 feet/second
Average Gas Flow Rate in Dilution Tunnel - Qsd	8443.3 dscf/hour
Average Delta p	0.048 inches H20
Total Time of Test	175 minutes

	AMBIENT	SAMPLE TRAIN 1	SAMPLE TRAIN 2	FIRST HOUR FILTER (TRAIN 1)
Total Sample Volume - Vm	0.000 cubic feet	25.248 cubic feet	25.494 cubic feet	8.567 cubic feet
Average Gas Meter Temperature	80 degrees Fahrenheit	75 degrees Fahrenheit	73 degrees Fahrenheit	74 degrees Fahrenheit
Total Sample Volume (Standard Conditions) - Vmstd	0.000 dscf	24.056 dscf	24.217 dscf	8.182 dscf
Total Particulates - m_n	0 mg	2.5 mg	3 mg	1.5 mg
Particulate Concentration (dry-standard) - C_f/C_s	0.000000 grams/dscf	0.00010 grams/dscf	0.00012 grams/dscf	0.00018 grams/dscf
Total Particulate Emissions - E_T	0.00 grams	2.56 grams	3.05 grams	1.55 grams
Particulate Emission Rate	0.00 grams/hour	0.88 grams/hour	1.05 grams/hour	1.55 grams/hour
Emissions Factor		0.57 g/kg	0.68 g/kg	0.60 g/kg
Difference from Average Total Particulate Emissions		0.25 grams	0.25 grams	
	Dual Train Comparison Results Are Acceptable			

	FINAL AVERAGE RESULTS
Complete Test Run	
Total Particulate Emissions - E_T	2.81 grams
Particulate Emission Rate	0.96 grams/hour
Emissions Factor	0.62 grams/kg
First Hour Emissions	
Total Particulate Emissions - E_T	1.55 grams
Particulate Emission Rate	1.55 grams/hour
Emissions Factor	0.60 grams/kg
7.5% of Average Total Particulate Emissions	0.21 grams

	QUALITY CHECKS
Filter Temps < 90 °F	OK
Filter Face Velocity (47 mm)	OK
Dryer Exit Temp < 80F	OK
Leakage Rate	OK
Ambient Temp (55-90°F)	OK
Negative Probe Weight Eval.	OK
Pro-Rate Variation	OK
Stove Surface ΔT	OK

Technician Signature: _____

Wood Heater Efficiency Results - CSA B415.1

Manufacturer: Valley Comfort
Model: 20.2 Series
Date: 08/23/17
Run: 2
Control #: 0142WS013E
Test Duration: 175
Output Category: III

Technician Signature: _____

Test Results in Accordance with CSA B415.1-09

	HHV Basis	LHV Basis
Overall Efficiency	77.1%	83.3%
Combustion Efficiency	97.3%	97.3%
Heat Transfer Efficiency	79%	85.6%

Output Rate (kJ/h)	23,503	22,295	(Btu/h)
Burn Rate (kg/h)	1.54	3.39	(lb/h)
Input (kJ/h)	30,489	28,922	(Btu/h)

Test Load Weight (dry kg)	4.49	9.89	dry lb
MC wet (%)	18.23385119		
MC dry (%)	22.30		
Particulate (g)	0.96		
CO (g)	188		
Test Duration (h)	2.92		

Emissions	Particulate	CO
g/MJ Output	0.01	2.74
g/kg Dry Fuel	0.21	41.86
g/h	0.33	64.43
lb/MM Btu Output	0.03	6.37

Air/Fuel Ratio (A/F)	13.03

VERSION: 2.2 12/14/2009

Client: **Valley Comfort Systems, Inc.** Project Number: **142WS013E** Run Number: **2**
Model: **20.2 Series** Tracking Number: **2253** Date: **8/23/17**
Test Crew: **A. Kravitz**
OMNI Equipment ID numbers: 464,410,132,576,318,432,419,371,372,432,296-T55,567,413,592

Wood Heater Run Notes

Air Control Settings

Primary:

Medium High:
36 degrees from horizontal

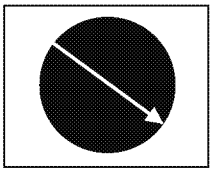

Secondary: Auto

Tertiary/Pilot: Fixed

Fan: On Med High

Preburn Notes

Time	Notes

Test Notes

Sketch test fuel configuration:

Side View:

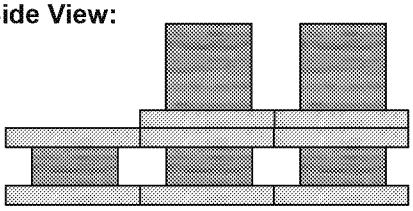

Start up procedures & Timeline:

Bypass: **Closed**
Fuel loaded by: **0:30**
Door closed at: **0:35**
Primary air: **Set @ 4:50**

Notes: **None**

Time	Notes
22:00-26:00	Optical encoder sticking, assume constant sample rate
29:30	Set fan to test setting

Technician Signature: Date: 9/20/2017

Control No. P-SFDT-0001, Effective Date: 01/12/2016

OMNI-Test Laboratories, Inc. **ASTM E2780 Wood Heater Run Sheets**

Client: **Valley Comfort Systems, Inc.** Project Number: **142WS013E** Run Number: **2**
Model: **20.2 Series** Tracking Number: **2253** Date: **8/23/17**
Test Crew: **A. Kravitz**
OMNI Equipment ID numbers: 464,410,132,576,318,432,419,371,372,432,296-T55,567,413,592

Wood Heater Supplemental Data

Start Time: 10:24 Booth #: N/A (site testing)

Stop Time: 13:19

Stack Gas Leak Check:

Initial: 0 Final: 0

Sample Train Leak Check:

A: 0 @-18 "Hg
B: 0 @-18 "Hg

Calibrations: Span Gas CO_2: 17.00 CO: 4.267

	Pre Test		Post Test	
	Zero	Span	Zero	Span
Time	7:50	7:55	17:46	17:48
CO_2	0.00	17.00	-0.03	17.01
CO	0.000	4.267	-0.003	4.273

Air Velocity (ft/min): Initial: <50 Final: <50
Scale Audit (lbs): Initial: 10.0 Final: 10.0
Pitot Tube Leak Test: Initial: 0 Final: 0
Stack Diameter (in): 6
Induced Draft: 0
% Smoke Capture: 100
Flue Pipe Cleaned Prior to First Test in Series:
Date: 8/21/17 Initials: AK

	Initial	Middle	Ending
P_b (in/Hg)	28.72	28.71	28.70
RH (%)	36.6	34.7	33.3
Ambient (°F)	76	80	79

Tunnel Traverse

Microtector Reading	dP (in H_2O)	T(°F)
0.014	0.028	99
0.022	0.044	99
0.021	0.042	99
0.013	0.026	99
0.016	0.032	99
0.023	0.046	99
0.022	0.044	99
0.015	0.030	99
Center:		
.0.024	0.048	99

Tunnel Static Pressure (in H_20):	
Beginning of Test	End of Test
-0.17	-0.17

Background Filter Volume: **N/A**

Technician Signature: Date: 9/20/2017

Control No. P-SFDT-0001, Effective Date: 01/12/2016

RUN 3

Wood Heater Preburn Data - ASTM E2780

Run:	3

Technician Signature: _____

Manufacturer:	Valley Comfort
Model:	20.2 Series
Tracking No.:	2253
Project No.:	0142WS013E
Test Date:	8/23/17
Beginning Clock Time:	14:03

Preburn Fuel Data

Fuel Piece Lengths (in.):	13	
Total Preburn Weight (lb):	14.9	
uel Moisture Readings (% DB):	19	23.6
	19.9	23.8
	23.8	23.8
	23.8	24.9
	19.4	22.1
Avg Preburn Moisture (% DB):	22.41	

Coal Bed Range (lb):	2.6 (min)	3.3 (max)

			Temperatures (°F)							
Elapsed Time (min)	Scale (lb)	Stack Draft (in H_2O)	FB Top	FB Bottom	FB Back	FB Left	FB Right	Avg. FB	Stack	Ambient
0	14.5	-0.052	584	583	286	385	395	446.6	412	82
1	14.1	-0.052	596	581	285	383	398	448.5	424	82
2	13.7	-0.053	606	579	284	383	399	450.4	425	84
3	13.2	-0.054	616	577	285	385	403	453.2	431	83
4	12.8	-0.054	624	575	284	387	408	455.5	436	83
5	12.3	-0.054	632	573	285	390	412	458.3	437	82
6	11.9	-0.054	640	571	285	393	418	461.5	435	83
7	11.4	-0.054	647	569	286	397	423	464.4	433	83
8	11	-0.055	654	567	287	402	428	467.8	427	83
9	10.6	-0.054	662	566	288	406	433	470.7	424	82
10	10.2	-0.054	668	564	289	411	437	473.8	428	82
11	9.8	-0.054	677	564	290	415	441	477.4	421	83
12	9.5	-0.055	701	563	291	420	441	483	424	84
13	9.3	-0.055	718	561	290	425	441	487	425	84
14	9.1	-0.055	720	560	288	430	440	487.7	417	83
15	8.9	-0.054	720	559	286	433	440	487.6	405	83
16	8.8	-0.054	720	557	285	435	440	487.3	400	83
17	8.7	-0.051	721	556	282	437	439	487.1	399	83
18	8.5	-0.053	722	554	280	438	440	486.7	399	83
19	8.3	-0.052	722	553	277	441	439	486.6	391	83
20	8.2	-0.052	727	551	275	444	439	487.1	395	83
21	8	-0.051	730	550	273	447	440	487.9	391	83
22	7.9	-0.050	734	548	271	450	440	488.6	387	83
23	7.7	-0.049	738	546	269	453	441	489.4	393	83
24	7.6	-0.050	745	544	268	456	443	491.2	390	83
25	7.4	-0.049	749	542	267	460	443	492.2	389	83
26	7.3	-0.049	753	540	265	463	445	493.2	395	83
27	7.2	-0.049	758	538	265	467	446	494.9	394	83
28	7	-0.050	761	536	264	470	448	495.9	394	84
29	6.9	-0.050	766	535	263	471	449	496.9	392	84
30	6.8	-0.049	768	533	262	473	451	497.4	388	83
31	6.6	-0.049	771	531	262	475	452	498.1	386	84
32	6.5	-0.049	772	529	261	475	454	498.1	389	83
33	6.4	-0.049	770	528	260	479	453	497.8	382	84
34	6.3	-0.049	771	526	259	485	452	498.6	385	83
35	6.1	-0.049	777	524	259	490	450	500	391	84
36	6	-0.049	784	523	259	498	450	502.7	394	83
37	5.9	-0.049	791	522	260	505	450	505.4	393	84
38	5.7	-0.050	796	520	260	511	450	507.5	397	84

Wood Heater Preburn Data - ASTM E2780

Run:	3

Technician Signature: _____

Manufacturer:	Valley Comfort
Model:	20.2 Series
Tracking No.:	2253
Project No.:	0142WS013E
Test Date:	8/23/17
Beginning Clock Time:	14:03

Preburn Fuel Data

Fuel Piece Lengths (in.):	13	
Total Preburn Weight (lb):	14.9	
uel Moisture Readings (% DB):	19	23.6
	19.9	23.8
	23.8	23.8
	23.8	24.9
	19.4	22.1
Avg Preburn Moisture (% DB):	22.41	

Coal Bed Range (lb):	2.6 (min)	3.3 (max)

			Temperatures (°F)							
Elapsed Time (min)	Scale (lb)	Stack Draft (in H_2O)	FB Top	FB Bottom	FB Back	FB Left	FB Right	Avg. FB	Stack	Ambient
39	5.6	-0.050	799	519	260	510	451	507.9	390	84
40	5.5	-0.050	798	518	261	506	454	507.5	398	84
41	5.4	-0.050	798	517	262	503	458	507.7	390	85
42	5.3	-0.049	795	517	262	501	462	507.2	391	84
43	5.2	-0.049	793	517	262	499	467	507.4	389	84
44	5.1	-0.048	787	516	261	497	471	506.7	387	84
45	4.9	-0.049	791	516	262	498	473	507.9	386	84
46	4.8	-0.050	793	516	264	502	476	510.1	386	84
47	4.7	-0.049	791	517	266	505	480	511.8	384	84
48	4.6	-0.048	788	518	269	512	486	514.6	379	84
49	4.5	-0.048	787	519	273	515	492	517.2	382	85
50	4.4	-0.048	785	521	279	524	499	521.6	374	84
51	4.3	-0.048	784	523	283	528	505	524.7	374	85
52	4.3	-0.047	780	526	289	532	512	527.6	376	84
53	4.2	-0.047	777	529	295	538	519	531.5	373	85
54	4.1	-0.046	775	532	301	543	527	535.7	373	85
55	4	-0.046	769	536	307	547	537	539	369	85
56	4	-0.046	766	539	312	549	545	542.2	363	86
57	3.9	-0.045	761	543	317	554	552	545.5	358	85
58	3.9	-0.045	757	547	323	557	560	548.8	355	85
59	3.8	-0.045	749	551	326	556	564	549.3	355	84
60	3.8	-0.044	737	555	330	553	563	547.5	347	85
61	3.8	-0.044	729	558	333	551	561	546.6	344	85
62	3.7	-0.044	718	562	334	548	558	544.1	339	85
63	3.7	-0.043	711	565	336	547	555	542.5	339	84
64	3.6	-0.043	702	568	336	544	549	539.9	332	85
65	3.6	-0.043	695	570	336	539	544	536.8	334	85
66	3.6	-0.043	687	573	335	533	541	533.7	331	85
67	3.6	-0.042	682	575	334	531	535	531.3	327	85
68	3.5	-0.042	676	577	332	523	531	527.9	328	85
69	3.5	-0.042	670	580	332	518	526	525.1	326	85
70	3.5	-0.042	664	582	329	513	521	521.7	328	85
71	3.4	-0.042	659	583	328	508	517	518.9	325	85
72	3.4	-0.042	653	585	327	503	512	515.8	326	86
73	3.4	-0.042	647	586	325	499	508	513.2	323	84
74	3.3	-0.043	642	588	322	495	505	510.3	325	84
75	3.3	-0.042	639	589	320	491	502	508.2	326	86
76	3.3	-0.042	635	591	319	488	498	506	329	85
77	3.2	-0.042	630	592	317	485	496	504.1	325	85

Wood Heater Test Fuel Data - ASTM E2780

Manufacturer:	Valley Comfort	PB Time	14:30	12% Cal:	12.0
Model:	20.2 Series	PB Temp	82	22% Cal:	22.0
Tracking No.:	2253				
Project No.:	0142WS013E	Test Time	14:30		
Test Date:	8/23/2017	Test Temp	82		
Run No.:	3				

Firebox Volume (ft^3):	1.82
Fuel Piece Length (in):	13
2x4 Crib Weight (lb):	5.1
4x4 Crib Weight (lb):	7.9

Total Fuel Weight (Dry Basis, lb):	10.7	
Fuel Density (lb/ft^3, Dry Basis):	30.58	OK
Loading Density (lb/ft^3, Wet Basis):	7.14	OK
2x4 Percentage:	39%	OK

Coal Bed Range (20-25%): 2.6 - 3.25

Test Fuel Piece	Weight (lb)	Size	Readings (Dry Basis %)			Dry Weight (lb)
1	1.2	2"x 4"	19.3	22.8	22.0	0.99
2	1.2	2"x 4"	21.0	21.6	19.9	0.99
3	1.4	2"x 4"	19.0	23.4	23.0	1.15
4	3.9	4"x 4"	21.6	21.9	22.8	3.19
5	3.6	4"x 4"	23.3	23.2	21.7	2.93

Spacer Readings (Dry Basis %)			
15.4			
18.3			
13.3			
16.0			
18.7			
17.9			
21.2			
17.7			
20.0			
14.9			

Technician Signature: _____

Wood Heater Test Data - ASTM E2780 / ASTM E2515

Run: 3

Manufacturer: Valley Comfort
Model: 20.2 Series
Tracking No.: 2253
Project No.: 0142WS013E
Test Date: 23-Aug-17
Beginning Clock Time: 15:20

Total Sampling Time: 129 min
Recording Interval: 1 min
Background Sample Volume: _____ cubic feet

Meter Box Y Factor: 1.003 (1) 0.997 (2) _____ (Amb)

Barometric Pressure:

Begin	Middle	End	Average
28.68	28.62	28.60	28.63 "Hg

OMNI Equipment Numbers: 464,410,132,576,318,432,419,371,372,432,296-T55,567,413,592

PM Control Modules: _____
Dilution Tunnel MW(dry): 29.00 lb/lb-mole
Dilution Tunnel MW(wet): 28.78 lb/lb-mole
Dilution Tunnel H2O: 2.00 percent
Dilution Tunnel Static: -0.170 "H2O
Tunnel Area: 0.19635 ft2
Pitot Tube Cp: 0.99

Avg. Tunnel Velocity: 13.66 ft/sec.
Initial Tunnel Flow: 138.2 scfm
Average Tunnel Flow: 138.6 scfm
Post-Test Leak Check (1): 0.000 cfm @ -18 in. Hg
Post-Test Leak Check (2): 0.000 cfm @ -18 in. Hg
Average Test Piece Fuel Moisture: 21.77 Dry Basis %

Technician Signature: _____

Velocity Traverse Data

	Pt.1	Pt.2	Pt.3	Pt.4	Pt.5	Pt.6	Pt.7	Pt.8	Center	
Initial dP	0.028	0.044	0.042	0.026	0.032	0.046	0.044	0.030	0.048	"H2O
Temp:	99	99	99	99	99	99	99	99	99	°F

V_{strav} 13.46 ft/sec V_{scent} 15.26 ft/sec F_p 0.882

	Particulate Sampling Data														Fuel Weight (lb)		Temperature Data (°F)													Stack Gas Data		
Elapsed Time (min)	Gas Meter 1 (ft^3)	Gas Meter 2 (ft^3)	Sample Rate 1 (cfm)	Sample Rate 2 (cfm)	Orifice dH 1 ("H_2O)	Meter 1 Temp (°F)	Meter 1 Vacuum ("Hg)	Orifice dH 2 ("H_2O)	Meter 2 Temp (°F)	Meter 2 Vacuum ("Hg)	Dilution Tunnel (°F)	Dilution Tunnel Center dP	Pro. Rate 1	Pro. Rate 2	Scale Reading	Weight Change	Firebox Top	Firebox Bottom	Firebox Back	Firebox Left	Firebox Right	Avg. Stove Surface	Catalyst Exit	Stack	Filter 1	Dryer Exit 1	Filter 2	Dryer Exit 2	Ambient	Draft ("H_2O)	CO_2 (%)	CO (%)
0	0.000	0.000			0.41		0.35	0.45	78	1	121	0.048			13.0		631	593	331	487	497	508	774	438	70	72	69	72	85	-0.051	2.65	0.03
1	0.123	0.134	0.12	0.13	1.78	79	-1.29	1.42	78	-0.4	124	0.048	84	92	12.9	-0.1	623	592	341	481	490	505	708	435	72	70	72	72	84	-0.063	2.4	0.02
2	0.270	0.285	0.15	0.15	1.78	79	-1.31	1.40	78	-0.8	120	0.048	100	103	12.7	-0.2	629	591	347	476	487	506	898	437	73	70	73	72	84	-0.066	9.93	0.25
3	0.416	0.435	0.15	0.15	1.77	79	-1.3	1.39	78	-0.8	118	0.048	99	102	12.5	-0.2	647	591	350	473	486	509	1001	444	73	69	74	72	84	-0.067	10.67	0.38
4	0.563	0.585	0.15	0.15	1.75	79	-1.31	1.39	77	-0.8	117	0.048	99	102	12.3	-0.2	665	590	351	470	486	512	1026	450	73	69	74	72	83	-0.068	10.73	0.55
5	0.709	0.735	0.15	0.15	1.74	79	-1.3	1.38	77	-0.8	117	0.048	99	102	12.2	-0.1	683	589	350	470	488	516	1039	456	73	69	74	72	83	-0.069	10.66	0.49
6	0.854	0.884	0.15	0.15	1.73	79	-1.3	1.33	77	-0.8	117	0.048	98	102	12.0	-0.2	700	588	350	468	490	519	1054	463	74	68	74	71	83	-0.069	10.95	0.52
7	0.999	1.031	0.15	0.15	1.73	79	-1.3	1.32	77	-0.8	117	0.048	98	100	11.8	-0.2	715	587	348	468	493	522	1064	468	74	68	74	71	84	-0.069	11.06	0.59
8	1.144	1.178	0.15	0.15	1.71	79	-1.3	1.33	76	-0.8	117	0.048	98	100	11.6	-0.2	729	587	347	469	495	525	1069	473	74	68	75	71	83	-0.069	10.95	0.6
9	1.289	1.325	0.15	0.15	1.69	78	-1.3	1.33	76	-0.8	117	0.048	98	100	11.4	-0.2	743	585	345	471	498	528	1079	478	74	68	75	71	83	-0.069	10.82	0.6
10	1.432	1.470	0.14	0.15	1.67	78	-1.31	1.32	76	-0.8	117	0.048	97	99	11.2	-0.2	756	584	343	472	500	531	1083	482	75	67	75	71	83	-0.069	10.92	0.64
11	1.576	1.616	0.14	0.15	1.69	78	-1.31	1.32	76	-0.8	117	0.048	97	100	11.0	-0.2	768	583	341	474	503	534	1098	487	75	67	75	71	84	-0.069	11.46	0.75
12	1.720	1.761	0.14	0.15	1.69	78	-1.32	1.31	75	-0.8	116	0.048	97	99	10.8	-0.2	780	582	339	476	506	537	1103	491	75	67	75	71	83	-0.069	11.16	0.73
13	1.863	1.907	0.14	0.15	1.69	78	-1.32	1.30	75	-0.8	116	0.048	97	100	10.6	-0.2	790	581	337	479	509	539	1105	494	75	67	75	71	82	-0.069	10.78	0.81
14	2.007	2.052	0.14	0.15	1.69	78	-1.32	1.29	75	-0.8	116	0.048	97	99	10.4	-0.2	800	580	335	481	511	541	1109	498	75	67	76	71	83	-0.069	10.8	0.86
15	2.150	2.197	0.14	0.15	1.68	78	-1.32	1.29	75	-0.8	116	0.048	97	99	10.3	-0.1	810	579	334	483	514	544	1119	502	75	67	76	71	83	-0.069	10.93	0.74
16	2.293	2.342	0.14	0.15	1.67	78	-1.31	1.29	74	-0.8	116	0.048	97	99	10.1	-0.2	819	579	332	486	517	547	1125	505	75	67	76	71	84	-0.069	10.82	0.69
17	2.434	2.487	0.14	0.15	1.64	78	-1.32	1.28	74	-0.8	116	0.048	95	99	9.9	-0.2	827	578	330	488	520	549	1130	508	75	66	76	71	83	-0.069	10.9	0.68
18	2.577	2.631	0.14	0.14	1.67	78	-1.32	1.28	74	-0.8	116	0.048	97	99	9.7	-0.2	834	578	328	490	523	551	1132	510	75	66	76	71	84	-0.069	10.85	0.67
19	2.720	2.775	0.14	0.14	1.67	78	-1.32	1.28	74	-0.8	115	0.048	97	99	9.6	-0.1	842	577	327	493	526	553	1143	513	76	66	76	71	83	-0.069	11.19	0.85
20	2.863	2.920	0.14	0.15	1.68	78	-1.33	1.28	74	-0.8	116	0.048	97	99	9.4	-0.2	848	576	326	497	529	555	1145	515	76	66	76	71	83	-0.069	11.05	0.89
21	3.006	3.064	0.14	0.14	1.66	78	-1.33	1.28	74	-0.8	116	0.048	97	99	9.2	-0.2	854	576	325	501	532	558	1144	517	76	66	76	71	83	-0.069	11.15	0.97
22	3.148	3.209	0.14	0.15	1.63	78	-1.33	1.28	74	-0.9	116	0.048	96	99	9.0	-0.2	859	575	325	505	536	560	1146	519	76	66	76	71	84	-0.069	11.35	1.23
23	3.289	3.353	0.14	0.14	1.63	78	-1.33	1.28	73	-0.9	115	0.048	95	99	8.9	-0.1	865	574	324	507	540	562	1151	521	76	66	77	71	84	-0.068	10.92	1.15
24	3.432	3.497	0.14	0.14	1.65	78	-1.33	1.28	73	-0.9	115	0.048	97	99	8.7	-0.2	869	573	324	513	546	565	1148	522	76	66	77	71	83	-0.069	11.16	1.19
25	3.575	3.641	0.14	0.14	1.67	78	-1.34	1.28	73	-0.9	116	0.048	97	99	8.5	-0.2	872	573	323	521	555	569	1126	524	76	66	77	71	82	-0.069	11.09	1.53
26	3.718	3.785	0.14	0.14	1.65	78	-1.33	1.28	73	-0.9	115	0.048	97	99	8.3	-0.2	873	572	324	526	564	572	1113	524	76	66	77	70	83	-0.069	10.85	1.19
27	3.859	3.929	0.14	0.14	1.66	78	-1.33	1.28	73	-0.9	115	0.048	95	99	8.2	-0.1	874	571	324	532	574	575	1108	524	76	66	77	71	83	-0.069	11.05	1.07
28	4.001	4.073	0.14	0.14	1.62	78	-1.33	1.27	73	-0.9	115	0.048	96	99	8.0	-0.2	874	570	325	538	582	578	1103	524	76	67	77	71	83	-0.068	11.02	0.92
29	4.149	4.217	0.15	0.14	1.82	78	-1.59	1.28	73	-0.9	115	0.048	100	99	7.8	-0.2	874	569	326	543	591	581	1106	524	76	67	77	71	83	-0.068	10.9	0.78
30	4.301	4.360	0.15	0.14	1.87	78	-1.6	1.28	73	-0.9	115	0.048	103	98	7.7	-0.1	867	568	318	538	594	577	1117	522	76	67	78	71	83	-0.065	10.59	0.59
31	4.452	4.506	0.15	0.15	1.87	78	-1.6	1.33	73	-0.9	115	0.048	102	100	7.5	-0.2	863	568	310	535	591	573	1122	520	77	67	78	71	84	-0.064	10.91	0.83
32	4.601	4.653	0.15	0.15	1.80	78	-1.51	1.33	73	-0.9	116	0.048	101	101	7.4	-0.1	855	567	304	533	590	570	1121	518	77	67	78	71	84	-0.064	10.83	0.7
33	4.749	4.799	0.15	0.15	1.81	78	-1.52	1.32	73	-0.9	115	0.048	100	100	7.2	-0.2	851	566	299	532	588	567	1119	516	77	67	78	71	84	-0.064	10.87	0.39
34	4.898	4.946	0.15	0.15	1.80	78	-1.52	1.32	73	-0.9	116	0.048	101	101	7.1	-0.1	849	565	294	530	586	565	1121	515	77	67	78	71	85	-0.064	10.55	0.25
35	5.046	5.093	0.15	0.15	1.80	78	-1.51	1.31	73	-0.9	116	0.048	100	101	6.9	-0.2	845	564	291	531	583	563	1122	514	77	67	78	71	85	-0.064	10.59	0.19
36	5.194	5.240	0.15	0.15	1.79	78	-1.51	1.32	73	-0.9	117	0.048	100	101	6.8	-0.1	839	563	288	531	580	560	1124	512	77	67	78	71	86	-0.063	10.56	0.2
37	5.342	5.387	0.15	0.15	1.79	78	-1.51	1.32	73	-0.9	117	0.048	100	101	6.7	-0.1	836	562	285	529	578	558	1120	511	77	67	78	71	86	-0.063	10.39	0.16
38	5.490	5.533	0.15	0.15	1.77	78	-1.51	1.32	73	-0.9	117	0.048	100	100	6.5	-0.2	833	561	283	529	576	556	1116	510	78	68	79	71	86	-0.062	10.4	0.14
39	5.638	5.679	0.15	0.15	1.76	78	-1.51	1.32	73	-0.9	117	0.048	100	100	6.4	-0.1	829	560	282	528	575	555	1116	508	78	68	79	71	86	-0.063	10.26	0.2

Wood Heater Test Data - ASTM E2780 / ASTM E2515

Run: 3

Manufacturer: Valley Comfort
Model: 20.2 Series
Tracking No.: 2253
Project No.: 0142WS013E
Test Date: 23-Aug-17
Beginning Clock Time: 15:20

Total Sampling Time: 129 min
Recording Interval: 1 min
Background Sample Volume: _____ cubic feet

Meter Box Y Factor: 1.003 (1) 0.997 (2) _____ (Amb)

Barometric Pressure: Begin 28.68, Middle 28.62, End 28.60, Average 28.63 "Hg

OMNI Equipment Numbers: 464,410,132,576,318,432,419,371,372,432,296-T55,567,413,592

PM Control Modules: _____
Dilution Tunnel MW(dry): 29.00 lb/lb-mole
Dilution Tunnel MW(wet): 28.78 lb/lb-mole
Dilution Tunnel H2O: 2.00 percent
Dilution Tunnel Static: -0.170 "H2O
Tunnel Area: 0.19635 ft2
Pitot Tube Cp: 0.99

Avg. Tunnel Velocity: 13.66 ft/sec.
Initial Tunnel Flow: 138.2 scfm
Average Tunnel Flow: 138.6 scfm
Post-Test Leak Check (1): 0.000 cfm @ -18 in. Hg
Post-Test Leak Check (2): 0.000 cfm @ -18 in. Hg
Average Test Piece Fuel Moisture: 21.77 Dry Basis %

Technician Signature: _____

Velocity Traverse Data

	Pt.1	Pt.2	Pt.3	Pt.4	Pt.5	Pt.6	Pt.7	Pt.8	Center	
Initial dP	0.028	0.044	0.042	0.026	0.032	0.046	0.044	0.030	0.048	"H2O
Temp:	99	99	99	99	99	99	99	99	99	°F

V_{strav} 13.46 ft/sec V_{scent} 15.26 ft/sec F_p 0.882

	Particulate Sampling Data														Fuel Weight (lb)		Temperature Data (°F)													Stack Gas Data		
Elapsed Time (min)	Gas Meter 1 (ft^3)	Gas Meter 2 (ft^3)	Sample Rate 1 (cfm)	Sample Rate 2 (cfm)	Orifice dH 1 ("H_2O)	Meter 1 Temp (°F)	Meter 1 Vacuum ("Hg)	Orifice dH 2 ("H_2O)	Meter 2 Temp (°F)	Meter 2 Vacuum ("Hg)	Dilution Tunnel (°F)	Dilution Tunnel Center dP	Pro. Rate 1	Pro. Rate 2	Scale Reading	Weight Change	Firebox Top	Firebox Bottom	Firebox Back	Firebox Left	Firebox Right	Avg. Stove Surface	Catalyst Exit	Stack	Filter 1	Dryer Exit 1	Filter 2	Dryer Exit 2	Ambient	Draft ("H_2O)	CO_2 (%)	CO (%)
40	5.786	5.825	0.15	0.15	1.76	78	-1.5	1.32	73	-0.9	118	0.048	100	100	6.3	-0.1	825	558	280	528	574	553	1117	507	78	68	79	71	86	-0.064	10.57	0.24
41	5.935	5.971	0.15	0.15	1.76	78	-1.51	1.31	73	-0.9	118	0.048	101	100	6.1	-0.2	821	557	279	528	574	552	1104	505	78	68	79	71	85	-0.065	10.84	0.23
42	6.084	6.118	0.15	0.15	1.78	79	-1.51	1.31	73	-0.9	118	0.048	101	101	6.0	-0.1	820	556	278	528	573	551	1106	505	78	68	79	72	85	-0.064	11.11	0.29
43	6.232	6.264	0.15	0.15	1.78	79	-1.51	1.30	74	-0.9	118	0.048	100	100	5.9	-0.1	820	555	278	530	572	551	1106	505	78	68	79	72	86	-0.064	10.99	0.2
44	6.381	6.411	0.15	0.15	1.80	79	-1.52	1.31	74	-0.9	118	0.048	101	101	5.7	-0.2	815	554	278	532	571	550	1106	503	78	68	79	72	85	-0.064	10.93	0.23
45	6.529	6.557	0.15	0.15	1.80	79	-1.51	1.32	74	-0.9	118	0.048	100	100	5.6	-0.1	813	554	278	537	570	550	1100	503	78	68	79	72	85	-0.064	10.66	0.23
46	6.677	6.704	0.15	0.15	1.78	79	-1.51	1.32	74	-0.9	118	0.048	100	101	5.4	-0.2	812	553	278	540	568	550	1098	502	78	68	79	72	85	-0.064	11.03	0.16
47	6.826	6.849	0.15	0.15	1.79	79	-1.52	1.32	74	-0.9	118	0.048	101	100	5.3	-0.1	811	552	278	546	568	551	1105	502	78	69	79	72	85	-0.065	11.23	0.3
48	6.974	6.996	0.15	0.15	1.80	79	-1.51	1.32	74	-0.9	118	0.048	100	101	5.2	-0.1	809	552	278	551	566	551	1109	501	79	69	79	72	86	-0.065	11	0.38
49	7.122	7.142	0.15	0.15	1.80	79	-1.53	1.30	74	-1	119	0.048	100	100	5.0	-0.2	809	552	278	553	565	551	1114	501	79	69	80	72	86	-0.065	11.2	0.42
50	7.270	7.288	0.15	0.15	1.81	79	-1.52	1.30	74	-0.9	119	0.048	100	100	4.9	-0.1	810	552	278	558	564	552	1109	502	79	69	80	72	86	-0.064	11.05	0.37
51	7.419	7.434	0.15	0.15	1.80	79	-1.51	1.30	74	-0.9	118	0.048	101	100	4.7	-0.2	808	552	279	563	563	553	1108	501	79	69	80	72	86	-0.064	10.75	0.32
52	7.567	7.581	0.15	0.15	1.79	79	-1.52	1.31	74	-1	119	0.048	100	101	4.6	-0.1	807	552	280	564	562	553	1106	500	79	69	80	72	86	-0.064	10.78	0.26
53	7.715	7.727	0.15	0.15	1.78	79	-1.52	1.32	74	-0.9	118	0.048	100	100	4.5	-0.1	806	552	281	566	562	553	1103	500	79	69	80	72	87	-0.064	10.47	0.2
54	7.863	7.874	0.15	0.15	1.78	79	-1.51	1.32	74	-1	118	0.048	100	101	4.3	-0.2	802	552	282	567	561	553	1099	499	79	69	80	72	86	-0.063	10.45	0.1
55	8.011	8.020	0.15	0.15	1.76	79	-1.52	1.32	74	-1	118	0.048	100	100	4.2	-0.1	802	552	283	567	560	553	1091	499	79	69	80	72	86	-0.063	9.94	0.1
56	8.159	8.166	0.15	0.15	1.75	79	-1.51	1.32	74	-1	118	0.048	100	100	4.1	-0.1	798	552	284	563	558	551	1078	497	79	69	80	72	86	-0.063	9.69	0.08
57	8.308	8.312	0.15	0.15	1.76	80	-1.5	1.31	74	-0.9	117	0.048	100	100	4.0	-0.1	794	552	285	561	554	549	1071	496	79	69	80	73	85	-0.063	9.34	0.09
58	8.458	8.459	0.15	0.15	1.76	80	-1.51	1.30	74	-1	117	0.048	101	101	3.9	-0.1	791	552	286	558	552	548	1070	495	79	70	80	73	87	-0.062	8.98	0.03
59	8.606	8.605	0.15	0.15	1.79	80	-1.51	1.30	74	-1	117	0.048	100	100	3.8	-0.1	789	552	288	552	550	546	1062	494	79	70	80	73	87	-0.062	8.52	0.01
60	8.752	8.752	0.15	0.15	1.78	80	-1.5	1.30	74	-1	117	0.048	98	101	3.7	-0.1	782	552	290	548	548	544	1056	492	79	70	80	73	86	-0.062	8.52	0
61	8.904	8.899	0.15	0.15	1.85	80	-1.33	1.31	74	-1	117	0.048	102	101	3.6	-0.1	779	552	291	541	545	542	1054	491	79	70	80	73	86	-0.063	8.33	0
62	9.054	9.046	0.15	0.15	1.85	80	-1.34	1.31	74	-1	117	0.048	101	101	3.6	0	776	552	293	537	543	540	1056	489	80	70	80	73	87	-0.063	8.29	0
63	9.205	9.191	0.15	0.15	1.84	80	-1.36	1.32	74	-1	117	0.048	102	99	3.5	-0.1	773	553	294	530	539	538	1056	488	82	70	80	73	88	-0.063	8.26	0
64	9.355	9.338	0.15	0.15	1.82	80	-1.36	1.31	74	-1	117	0.048	101	101	3.4	-0.1	768	553	297	527	536	536	1052	487	81	70	80	73	87	-0.063	8.01	0
65	9.505	9.484	0.15	0.15	1.81	80	-1.35	1.31	74	-1	117	0.048	101	100	3.3	-0.1	766	553	298	522	533	534	1047	486	81	70	80	73	86	-0.063	7.95	0.01
66	9.657	9.631	0.15	0.15	1.83	80	-1.35	1.31	74	-1	116	0.048	102	101	3.2	-0.1	760	553	301	519	529	532	1040	484	81	70	80	73	86	-0.063	7.84	0
67	9.808	9.777	0.15	0.15	1.85	80	-1.36	1.30	74	-1	117	0.048	102	100	3.1	-0.1	755	553	303	516	526	531	1035	482	81	70	80	73	86	-0.063	8.04	0
68	9.958	9.924	0.15	0.15	1.83	80	-1.35	1.29	74	-1	117	0.048	101	101	3.1	0	751	553	305	513	522	529	1025	481	81	71	80	73	86	-0.063	8.13	0
69	10.108	10.071	0.15	0.15	1.85	80	-1.36	1.31	75	-1	116	0.048	101	101	3.0	-0.1	745	553	309	512	519	528	1014	478	81	71	80	73	86	-0.062	7.96	0
70	10.259	10.218	0.15	0.15	1.83	80	-1.36	1.31	75	-1	116	0.048	102	101	2.9	-0.1	741	553	311	510	516	526	1003	477	81	71	80	74	85	-0.062	8.03	0
71	10.409	10.363	0.15	0.15	1.81	80	-1.35	1.31	75	-1	116	0.048	101	99	2.8	-0.1	736	554	313	510	513	525	995	475	81	71	80	74	86	-0.062	8.03	0
72	10.561	10.510	0.15	0.15	1.81	80	-1.35	1.31	75	-1	116	0.048	102	101	2.8	0	731	554	315	507	510	523	988	474	81	71	80	74	86	-0.061	7.98	0
73	10.712	10.656	0.15	0.15	1.85	80	-1.35	1.30	75	-1	116	0.048	102	100	2.7	-0.1	727	554	319	507	508	523	982	472	81	71	80	74	86	-0.062	8.06	0
74	10.863	10.803	0.15	0.15	1.84	80	-1.36	1.30	75	-1	115	0.048	102	100	2.6	-0.1	722	555	321	508	506	522	980	470	81	71	80	74	86	-0.061	8.08	0
75	11.013	10.949	0.15	0.15	1.85	80	-1.36	1.30	75	-1	115	0.048	101	100	2.5	-0.1	719	555	324	507	503	522	990	469	81	71	80	74	86	-0.061	8.08	0
76	11.164	11.096	0.15	0.15	1.84	80	-1.36	1.30	75	-1	115	0.048	102	100	2.5	0	717	556	326	506	501	521	992	469	81	71	80	74	86	-0.062	8.15	0
77	11.314	11.243	0.15	0.15	1.81	80	-1.35	1.31	75	-1	115	0.048	101	100	2.4	-0.1	715	556	328	506	499	521	989	468	81	71	80	74	86	-0.062	8.04	0
78	11.465	11.389	0.15	0.15	1.82	80	-1.36	1.31	75	-1	115	0.048	102	100	2.3	-0.1	714	556	331	505	497	521	991	467	81	71	80	74	87	-0.062	7.99	0
79	11.617	11.535	0.15	0.15	1.84	80	-1.36	1.31	75	-1	115	0.048	102	100	2.2	-0.1	711	557	333	505	494	520	990	466	81	71	80	74	86	-0.062	7.98	0

Wood Heater Test Data - ASTM E2780 / ASTM E2515

Run: 3

Manufacturer: Valley Comfort
Model: 20.2 Series
Tracking No.: 2253
Project No.: 0142WS013E
Test Date: 23-Aug-17
Beginning Clock Time: 15:20

Total Sampling Time: 129 min
Recording Interval: 1 min
Background Sample Volume: _____ cubic feet

Meter Box Y Factor: 1.003 (1) 0.997 (2) _____ (Amb)

Barometric Pressure: Begin 28.68, Middle 28.62, End 28.60, Average 28.63 "Hg

OMNI Equipment Numbers: 464,410,132,576,318,432,419,371,372,432,296-T55,567,413,592

PM Control Modules:
Dilution Tunnel MW(dry): 29.00 lb/lb-mole
Dilution Tunnel MW(wet): 28.78 lb/lb-mole
Dilution Tunnel H2O: 2.00 percent
Dilution Tunnel Static: -0.170 "H2O
Tunnel Area: 0.19635 ft2
Pitot Tube Cp: 0.99

Avg. Tunnel Velocity: 13.66 ft/sec.
Initial Tunnel Flow: 138.2 scfm
Average Tunnel Flow: 138.6 scfm
Post-Test Leak Check (1): 0.000 cfm @ -18 in. Hg
Post-Test Leak Check (2): 0.000 cfm @ -18 in. Hg
Average Test Piece Fuel Moisture: 21.77 Dry Basis %

Technician Signature: _____

Velocity Traverse Data

	Pt.1	Pt.2	Pt.3	Pt.4	Pt.5	Pt.6	Pt.7	Pt.8	Center	
Initial dP	0.028	0.044	0.042	0.026	0.032	0.046	0.044	0.030	0.048	"H2O
Temp:	99	99	99	99	99	99	99	99	99	°F

V_{strav} 13.46 ft/sec V_{scent} 15.26 ft/sec F_p 0.882

	Particulate Sampling Data														Fuel Weight (lb)		Temperature Data (°F)													Stack Gas Data		
Elapsed Time (min)	Gas Meter 1 (ft^3)	Gas Meter 2 (ft^3)	Sample Rate 1 (cfm)	Sample Rate 2 (cfm)	Orifice dH 1 ("H_2O)	Meter 1 Temp (°F)	Meter 1 Vacuum ("Hg)	Orifice dH 2 ("H_2O)	Meter 2 Temp (°F)	Meter 2 Vacuum ("Hg)	Dilution Tunnel (°F)	Dilution Tunnel Center dP	Pro. Rate 1	Pro. Rate 2	Scale Reading	Weight Change	Firebox Top	Firebox Bottom	Firebox Back	Firebox Left	Firebox Right	Avg. Stove Surface	Catalyst Exit	Stack	Filter 1	Dryer Exit 1	Filter 2	Dryer Exit 2	Ambient	Draft ("H_2O)	CO_2 (%)	CO (%)
80	11.768	11.682	0.15	0.15	1.83	80	-1.36	1.31	75	-1	115	0.048	102	100	2.2	0	707	557	335	505	494	520	989	465	81	71	80	74	86	-0.062	8.15	0
81	11.918	11.828	0.15	0.15	1.85	80	-1.36	1.31	75	-1	115	0.048	101	100	2.1	-0.1	705	557	339	506	494	520	994	464	81	71	80	74	87	-0.062	8.33	0
82	12.069	11.975	0.15	0.15	1.84	80	-1.35	1.30	75	-1	115	0.048	102	100	2.0	-0.1	704	557	341	506	493	520	997	464	81	71	80	74	86	-0.062	8.22	0
83	12.219	12.121	0.15	0.15	1.83	80	-1.36	1.29	75	-1	115	0.048	101	100	1.9	-0.1	703	558	343	504	493	520	998	464	81	72	80	74	86	-0.062	8.19	0
84	12.370	12.268	0.15	0.15	1.79	80	-1.35	1.31	75	-1	114	0.048	102	100	1.9	0	702	558	346	506	493	521	1000	463	81	72	80	74	87	-0.062	8.38	0
85	12.521	12.415	0.15	0.15	1.84	80	-1.36	1.31	75	-1	115	0.048	102	100	1.8	-0.1	700	558	348	506	494	521	1001	463	81	72	80	74	86	-0.062	8.52	0
86	12.672	12.561	0.15	0.15	1.84	80	-1.36	1.31	75	-1	114	0.048	102	100	1.8	0	700	558	350	505	495	522	1006	463	81	72	80	74	86	-0.061	8.69	0
87	12.822	12.707	0.15	0.15	1.84	80	-1.37	1.31	75	-1	114	0.048	101	100	1.7	-0.1	700	558	352	506	496	522	1005	463	81	72	80	74	88	-0.062	8.41	0
88	12.973	12.854	0.15	0.15	1.83	80	-1.36	1.31	75	-1	114	0.048	102	100	1.6	-0.1	696	558	352	505	497	522	989	461	81	72	80	74	86	-0.062	8.07	0
89	13.123	13.000	0.15	0.15	1.83	81	-1.37	1.29	75	-1	114	0.048	101	100	1.5	-0.1	693	558	355	504	497	521	969	460	81	72	80	74	86	-0.061	7.79	0
90	13.273	13.147	0.15	0.15	1.81	81	-1.37	1.30	75	-1	114	0.048	101	100	1.5	0	690	558	356	501	498	521	961	459	81	72	80	74	87	-0.061	7.63	0
91	13.425	13.293	0.15	0.15	1.82	81	-1.36	1.31	75	-1	114	0.048	102	100	1.4	-0.1	686	558	357	500	498	520	956	458	81	72	80	75	86	-0.061	7.46	0
92	13.576	13.440	0.15	0.15	1.83	81	-1.36	1.30	75	-1	113	0.048	101	100	1.4	0	682	558	358	499	498	519	954	456	81	72	80	75	87	-0.061	7.44	0
93	13.727	13.587	0.15	0.15	1.83	81	-1.36	1.32	75	-1	113	0.048	101	100	1.3	-0.1	679	557	360	498	498	518	949	455	81	72	80	75	87	-0.060	7.54	0
94	13.878	13.733	0.15	0.15	1.84	81	-1.37	1.32	75	-1	113	0.048	101	100	1.3	0	675	557	361	498	498	518	937	454	80	72	80	75	85	-0.060	7.47	0
95	14.028	13.879	0.15	0.15	1.83	81	-1.37	1.31	75	-1	112	0.048	100	100	1.2	-0.1	670	557	362	496	498	517	921	452	80	72	80	75	85	-0.060	7.32	0
96	14.179	14.026	0.15	0.15	1.80	81	-1.36	1.31	75	-1	112	0.048	101	100	1.1	-0.1	665	556	362	496	498	515	907	450	80	72	80	75	86	-0.060	7.42	0
97	14.331	14.173	0.15	0.15	1.81	81	-1.36	1.30	75	-1	112	0.048	102	100	1.1	0	660	556	363	495	499	515	901	448	80	72	80	75	86	-0.060	7.43	0
98	14.482	14.319	0.15	0.15	1.84	81	-1.36	1.30	75	-1	112	0.048	101	100	1.0	-0.1	657	555	364	496	499	514	899	447	80	72	80	75	85	-0.060	7.26	0
99	14.632	14.466	0.15	0.15	1.84	81	-1.36	1.30	75	-1	112	0.048	100	100	1.0	0	653	555	365	497	500	514	897	446	80	72	80	75	85	-0.060	7.4	0
100	14.783	14.613	0.15	0.15	1.84	81	-1.36	1.31	75	-1	112	0.048	101	100	0.9	-0.1	649	554	365	500	503	514	889	444	80	72	80	75	86	-0.060	6.86	0
101	14.934	14.760	0.15	0.15	1.83	81	-1.36	1.31	75	-1	111	0.048	101	100	0.9	0	646	554	367	501	505	515	878	443	80	72	80	75	85	-0.060	6.45	0
102	15.084	14.906	0.15	0.15	1.81	81	-1.36	1.31	75	-1	112	0.048	100	100	0.9	0	642	555	367	503	505	514	864	442	80	72	80	75	85	-0.060	6.32	0
103	15.236	15.053	0.15	0.15	1.83	81	-1.37	1.31	75	-1	111	0.048	102	100	0.8	-0.1	637	557	366	503	505	514	856	440	80	72	80	75	86	-0.059	6.15	0
104	15.387	15.200	0.15	0.15	1.84	81	-1.37	1.30	75	-1	111	0.048	101	100	0.8	0	633	559	364	501	505	512	850	439	80	72	80	75	87	-0.059	6.1	0
105	15.538	15.346	0.15	0.15	1.84	81	-1.36	1.30	75	-1	111	0.048	101	99	0.7	-0.1	629	560	362	499	503	511	845	437	80	72	80	75	86	-0.059	5.91	0
106	15.688	15.493	0.15	0.15	1.84	81	-1.36	1.29	75	-1	111	0.048	100	100	0.7	0	624	562	360	496	502	509	840	436	80	72	80	75	86	-0.059	5.89	0
107	15.839	15.640	0.15	0.15	1.83	81	-1.36	1.31	75	-1	111	0.048	101	100	0.7	0	620	563	357	491	499	506	839	434	80	73	80	75	86	-0.059	5.82	0
108	15.989	15.787	0.15	0.15	1.81	81	-1.37	1.31	75	-1	111	0.048	100	100	0.7	0	616	565	354	488	496	504	840	433	80	73	80	75	86	-0.059	5.91	0
109	16.142	15.933	0.15	0.15	1.82	81	-1.36	1.31	75	-1	111	0.048	102	99	0.6	-0.1	613	567	350	485	494	502	839	432	80	73	80	75	85	-0.059	5.81	0
110	16.293	16.079	0.15	0.15	1.83	81	-1.36	1.31	75	-1	111	0.048	101	99	0.6	0	610	568	347	479	492	499	836	431	80	73	80	75	86	-0.059	5.88	0
111	16.443	16.226	0.15	0.15	1.83	81	-1.36	1.31	75	-1	111	0.048	100	100	0.6	0	607	569	344	478	489	497	835	429	80	73	80	75	86	-0.059	5.94	0
112	16.594	16.373	0.15	0.15	1.84	81	-1.37	1.30	75	-1	111	0.048	101	100	0.5	-0.1	604	570	340	475	486	495	832	428	80	73	80	75	85	-0.059	5.87	0
113	16.745	16.519	0.15	0.15	1.83	81	-1.36	1.30	75	-1	111	0.048	101	99	0.5	0	601	571	337	472	484	493	829	427	80	73	80	75	86	-0.059	5.89	0
114	16.895	16.666	0.15	0.15	1.81	81	-1.37	1.30	75	-1	111	0.048	100	100	0.5	0	598	572	334	470	480	491	831	426	80	73	80	75	85	-0.059	5.92	0
115	17.047	16.813	0.15	0.15	1.82	81	-1.37	1.30	75	-1	111	0.048	102	100	0.5	0	596	574	331	466	478	489	834	426	80	73	80	75	85	-0.059	5.94	0
116	17.198	16.960	0.15	0.15	1.84	81	-1.36	1.31	75	-1	110	0.048	101	100	0.4	-0.1	594	575	327	463	474	487	832	425	80	73	80	75	85	-0.059	5.92	0
117	17.349	17.106	0.15	0.15	1.85	81	-1.36	1.31	75	-1	110	0.048	101	99	0.4	0	592	576	325	459	472	485	826	424	80	73	80	75	85	-0.059	5.99	0
118	17.500	17.252	0.15	0.15	1.84	81	-1.37	1.31	75	-1	110	0.048	101	99	0.4	0	588	576	322	458	469	483	820	423	80	73	80	75	85	-0.059	5.8	0
119	17.651	17.399	0.15	0.15	1.83	81	-1.37	1.29	75	-1	110	0.048	101	100	0.3	-0.1	586	577	319	455	466	481	811	422	80	73	80	75	84	-0.059	5.71	0

Wood Heater Test Data - ASTM E2780 / ASTM E2515

Run: 3

Manufacturer: Valley Comfort
Model: 20.2 Series
Tracking No.: 2253
Project No.: 0142WS013E
Test Date: 23-Aug-17
Beginning Clock Time: 15:20

Total Sampling Time: 129 min
Recording Interval: 1 min
Background Sample Volume: _____ cubic feet

Meter Box Y Factor: 1.003 (1) 0.997 (2) _____ (Amb)

Barometric Pressure:	Begin	Middle	End	Average	
	28.68	28.62	28.60	28.63	"Hg

OMNI Equipment Numbers: 464,410,132,576,318,432,419,371,372,432,296-T55,567,413,592

PM Control Modules: _____
Dilution Tunnel MW(dry): 29.00 lb/lb-mole
Dilution Tunnel MW(wet): 28.78 lb/lb-mole
Dilution Tunnel H2O: 2.00 percent
Dilution Tunnel Static: -0.170 "H2O
Tunnel Area: 0.19635 ft2
Pitot Tube Cp: 0.99

Avg. Tunnel Velocity: 13.66 ft/sec.
Initial Tunnel Flow: 138.2 scfm
Average Tunnel Flow: 138.6 scfm
Post-Test Leak Check (1): 0.000 cfm @ -18 in. Hg
Post-Test Leak Check (2): 0.000 cfm @ -18 in. Hg
Average Test Piece Fuel Moisture: 21.77 Dry Basis %

Technician Signature: _____

Velocity Traverse Data	Pt.1	Pt.2	Pt.3	Pt.4	Pt.5	Pt.6	Pt.7	Pt.8	Center	
Initial dP	0.028	0.044	0.042	0.026	0.032	0.046	0.044	0.030	0.048	"H2O
Temp:	99	99	99	99	99	99	99	99	99	°F

V_{strav} 13.46 ft/sec V_{scent} 15.26 ft/sec F_p 0.882

	Particulate Sampling Data														Fuel Weight (lb)		Temperature Data (°F)													Stack Gas Data		
Elapsed Time (min)	Gas Meter 1 (ft^3)	Gas Meter 2 (ft^3)	Sample Rate 1 (cfm)	Sample Rate 2 (cfm)	Orifice dH 1 ("H_2O)	Meter 1 Temp (°F)	Meter 1 Vacuum ("Hg)	Orifice dH 2 ("H_2O)	Meter 2 Temp (°F)	Meter 2 Vacuum ("Hg)	Dilution Tunnel (°F)	Dilution Tunnel Center dP	Pro. Rate 1	Pro. Rate 2	Scale Reading	Weight Change	Firebox Top	Firebox Bottom	Firebox Back	Firebox Left	Firebox Right	Avg. Stove Surface	Catalyst Exit	Stack	Filter 1	Dryer Exit 1	Filter 2	Dryer Exit 2	Ambient	Draft ("H_2O)	CO_2 (%)	CO (%)
120	17.801	17.546	0.15	0.15	1.80	81	-1.36	1.30	75	-1	110	0.048	100	100	0.3	0	582	578	317	452	464	479	806	421	80	73	80	75	85	-0.059	5.77	0
121	17.953	17.693	0.15	0.15	1.84	81	-1.37	1.30	75	-1	110	0.048	102	100	0.3	0	581	579	315	450	460	477	801	420	80	73	80	75	86	-0.059	5.5	0
122	18.105	17.839	0.15	0.15	1.84	81	-1.37	1.30	75	-1	110	0.048	102	99	0.2	-0.1	578	580	313	447	457	475	800	419	80	73	80	75	84	-0.059	5.47	0
123	18.255	17.987	0.15	0.15	1.85	80	-1.36	1.30	75	-1	109	0.048	100	101	0.2	0	576	580	311	444	454	473	798	418	80	73	80	75	85	-0.059	5.48	0
124	18.406	18.133	0.15	0.15	1.84	81	-1.36	1.31	75	-1	110	0.048	101	99	0.2	0	572	581	309	442	452	471	796	417	80	73	80	75	85	-0.058	5.53	0
125	18.557	18.279	0.15	0.15	1.83	81	-1.36	1.31	75	-1	110	0.048	101	99	0.2	0	570	582	308	439	448	469	795	416	80	73	80	75	85	-0.059	5.44	0
126	18.708	18.426	0.15	0.15	1.80	80	-1.36	1.30	74	-1	109	0.048	101	100	0.1	-0.1	568	581	306	437	446	468	801	416	80	73	79	75	84	-0.058	5.5	0
127	18.860	18.573	0.15	0.15	1.85	80	-1.36	1.30	74	-1	110	0.048	102	100	0.1	0	567	581	304	433	443	466	801	415	80	73	79	75	85	-0.059	5.48	0
128	19.011	18.720	0.15	0.15	1.84	80	-1.37	1.30	75	-1	110	0.048	101	100	0.1	0	565	580	302	430	440	463	798	415	80	73	79	75	84	-0.059	5.33	0
129	19.161	18.867	0.15	0.15	1.85	80	-1.36	1.30	75	-1	110	0.048	100	100	0.0	-0.1	563	578	302	427	438	462	798	414	80	73	79	76	84	-0.059	5.22	0
Avg/Tot	19.161	18.867	0.15	0.15	1.78	80		1.30	75		115	0.048	100	100								46.2				70	79	73	85	-0.063		

Wood Heater Lab Data - ASTM E2780 / ASTM E2515

Manufacturer:	Valley Comfort	Equipment Numbers:	283A, 637, 592
Model:	20.2 Series		
Tracking No.:	2253		
Project No.:	0142WS013E		
Run #:	3		
Date:	8/23/17		

TRAIN 1 (First Hour emissions)

Sample Component	Reagent	Filter, Probe or Dish #	Weights		
			Final, mg	Tare, mg	Particulate, mg
B. Front filter catch	Filter	D236	121.5	119.1	2.4
C. Rear filter catch	Filter				0.0
D. Probe catch*	Probe				0.0
E. Filter seals catch*	Seals				0.0

Sub-Total	Total Particulate, mg:	2.4

TRAIN 1 (Post First Hour Change-out)

Sample Component	Reagent	Filter, Probe or Dish #	Weights		
			Final, mg	Tare, mg	Particulate, mg
B. Front filter catch	Filter	D237	123.4	122.9	0.5
C. Rear filter catch	Filter	D238	119.1	121.4	-2.3
D. Probe catch*	Probe	30	114330.5	114330.5	0.0
E. Filter seals catch*	Seals	R505	3340.1	3337.9	2.2

Sub-Total	Total Particulate, mg:	0.4
Train 1 Aggregate	Total Particulate, mg:	2.8

TRAIN 2

Sample Component	Reagent	Filter, Probe or Dish #	Weights		
			Final, mg	Tare, mg	Particulate, mg
A. Front filter catch	Filter	D239	122.7	120.1	2.6
B. Rear filter catch	Filter	D240	121.6	122.0	-0.4
C. Probe catch*	Probe	31	114369.7	114369.6	0.1
D. Filter seals catch*	Seals	R506	4160.3	4158.8	1.5

Total Particulate, mg:	3.8

AMBIENT

Sample Component	Reagent	Filter # or Probe #	Weights		
			Final, mg	Tare, mg	Particulate, mg
A. Front filter catch*	Filter				0.0

Total Particulate, mg:	0.0

*Particulate catch that results in a negative number, is assumed to be zero for probes and seals, negative numbers for filters are assumed to be part of the seal weight.

Component	Equations:
A. Front filter catch	Final (mg) - Tare (mg) = Particulate, mg
B. Rear filter catch	Final (mg) - Tare (mg) = Particulate, mg
C. Probe catch	Final (mg) - Tare (mg) = Particulate, mg

Technician Signature:

Wood Heater Test Results - ASTM E2780 / ASTM E2515

Manufacturer:	Valley Comfort
Model:	20.2 Series
Project No.:	0142WS013E
Tracking No.:	2253
Run:	3
Test Date:	08/23/17

Burn Rate	2.26 kg/hr dry
Average Tunnel Temperature	115 degrees Fahrenheit
Average Gas Velocity in Dilution Tunnel - vs	13.66 feet/second
Average Gas Flow Rate in Dilution Tunnel - Qsd	8313.4 dscf/hour
Average Delta p	0.048 inches H20
Total Time of Test	129 minutes

	AMBIENT	SAMPLE TRAIN 1	SAMPLE TRAIN 2	FIRST HOUR FILTER (TRAIN 1)
Total Sample Volume - Vm	0.000 cubic feet	19.161 cubic feet	18.867 cubic feet	8.752 cubic feet
Average Gas Meter Temperature	85 degrees Fahrenheit	80 degrees Fahrenheit	75 degrees Fahrenheit	79 degrees Fahrenheit
Total Sample Volume (Standard Conditions) - Vmstd	0.000 dscf	18.072 dscf	17.831 dscf	8.270 dscf
Total Particulates - m_n	0 mg	2.8 mg	3.8 mg	2.4 mg
Particulate Concentration (dry-standard) - C_f/C_s	0.000000 grams/dscf	0.00015 grams/dscf	0.00021 grams/dscf	0.00029 grams/dscf
Total Particulate Emissions - E_T	0.00 grams	2.77 grams	3.81 grams	2.41 grams
Particulate Emission Rate	0.00 grams/hour	1.29 grams/hour	1.77 grams/hour	2.41 grams/hour
Emissions Factor		0.57 g/kg	0.78 g/kg	0.70 g/kg
Difference from Average Total Particulate Emissions		0.52 grams	0.52 grams	

Dual Train Comparison Results Are Acceptable

FINAL AVERAGE RESULTS	
Complete Test Run	
Total Particulate Emissions - E_T	3.29 grams
Particulate Emission Rate	1.53 grams/hour
Emissions Factor	0.68 grams/kg
First Hour Emissions	
Total Particulate Emissions - E_T	2.41 grams
Particulate Emission Rate	2.41 grams/hour
Emissions Factor	0.70 grams/kg
7.5% of Average Total Particulate Emissions	0.25 grams

QUALITY CHECKS	
Filter Temps < 90 °F	OK
Filter Face Velocity (47 mm)	OK
Dryer Exit Temp < 80F	OK
Leakage Rate	OK
Ambient Temp (55-90°F)	OK
Negative Probe Weight Eval.	OK
Pro-Rate Variation	OK
Stove Surface ΔT	OK

Technician Signature:

Wood Heater Efficiency Results - CSA B415.1

Technician Signature: _____

Manufacturer:	Valley Comfort
Model:	20.2 Series
Date:	08/23/17
Run:	3
Control #:	0142WS013E
Test Duration:	129
Output Category:	IV

Test Results in Accordance with CSA B415.1-09

	HHV Basis	LHV Basis
Overall Efficiency	70.3%	76.0%
Combustion Efficiency	97.6%	97.6%
Heat Transfer Efficiency	72%	77.9%

Output Rate (kJ/h)	31,399	29,785	(Btu/h)
Burn Rate (kg/h)	2.25	4.97	(lb/h)
Input (kJ/h)	44,632	42,339	(Btu/h)

Test Load Weight (dry kg)	4.84	10.68	dry lb
MC wet (%)	17.87571859		
MC dry (%)	21.77		
Particulate (g)	1.53		
CO (g)	180		
Test Duration (h)	2.15		

Emissions	Particulate	CO
g/MJ Output	0.02	2.67
g/kg Dry Fuel	0.32	37.25
g/h	0.71	83.92
lb/MM Btu Output	0.05	6.21

Air/Fuel Ratio (A/F)	12.52

VERSION: 2.2 12/14/2009

Client: **Valley Comfort Systems, Inc.** Project Number: **142WS013E** Run Number: **3**
Model: **20.2 Series** Tracking Number: **2253** Date: **8/23/17**
Test Crew: **A. Kravitz**
OMNI Equipment ID numbers: 464,410,132,576,318,432,419,371,372,432,296-T55,567,413,592

Wood Heater Run Notes

Air Control Settings

Primary:

Maximum:
180 degrees from vertical

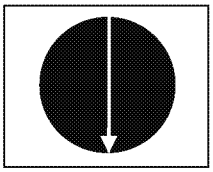

Secondary: Auto

Tertiary/Pilot: Fixed

Fan: On Max

Preburn Notes

Time	Notes

Test Notes

Sketch test fuel configuration:

Side View:

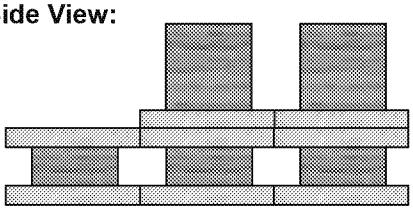

Start up procedures & Timeline:

Bypass: **Closed**
Fuel loaded by: **0:30**
Door closed at: **0:35**
Primary air: **Set @ 0:00**

Notes: **None**

Time	Notes
30:00	Set fan to test setting
60:00	Replaced Filter A

Technician Signature: Date: 9/20/2017

Control No. P-SFDT-0001, Effective Date: 01/12/2016

OMNI-Test Laboratories, Inc. **ASTM E2780 Wood Heater Run Sheets**

Client: **Valley Comfort Systems, Inc.** Project Number: **142WS013E** Run Number: **3**
Model: **20.2 Series** Tracking Number: **2253** Date: **8/23/17**
Test Crew: **A. Kravitz**
OMNI Equipment ID numbers: 464,410,132,576,318,432,419,371,372,432,296-T55,567,413,592

Wood Heater Supplemental Data

Start Time: 15:20 Booth #: N/A (site testing)

Stop Time: 17:29

Stack Gas Leak Check:

Initial: 0 Final: 0

Sample Train Leak Check:

A: 0 @-18 "Hg
B: 0 @-18 "Hg

Calibrations: Span Gas CO_2: 17.00 CO: 4.267

	Pre Test		Post Test	
	Zero	Span	Zero	Span
Time	7:50	7:55	17:46	17:48
CO_2	0.00	17.00	-0.03	17.01
CO	0.000	4.267	-0.003	4.273

Air Velocity (ft/min): Initial: <50 Final: <50
Scale Audit (lbs): Initial: 10.0 Final: 10.0
Pitot Tube Leak Test: Initial: 0 Final: 0
Stack Diameter (in): 6
Induced Draft: 0
% Smoke Capture: 100
Flue Pipe Cleaned Prior to First Test in Series:
Date: 8/21/17 Initials: AK

	Initial	Middle	Ending
P_b (in/Hg)	28.68	28.62	28.60
RH (%)	31.5	30.9	31.4
Ambient (°F)	81	84	82

Tunnel Traverse		
Microtector Reading	dP (in H_2O)	T(°F)
0.014	0.028	99
0.022	0.044	99
0.021	0.042	99
0.013	0.026	99
0.016	0.032	99
0.023	0.046	99
0.022	0.044	99
0.015	0.030	99
Center:		
.0.024	0.048	99

Tunnel Static Pressure (in H_20):	
Beginning of Test	End of Test
-0.17	-0.17

Background Filter Volume: **N/A**

Technician Signature: Date: 9/20/2017

Control No. P-SFDT-0001, Effective Date: 01/12/2016

RUN 4

Wood Heater Preburn Data - ASTM E2780

Run:	4

Technician Signature: _____

Manufacturer:	Valley Comfort
Model:	20.2 Series
Tracking No.:	2253
Project No.:	0142WS013E
Test Date:	8/24/17
Beginning Clock Time:	8:25

Preburn Fuel Data

Fuel Piece Lengths (in.):	13		
Total Preburn Weight (lb):	14.7		
Fuel Moisture Readings (% DB):	20	22.5	24.2
	24.2	19	20.8
	22.4	20	
	22.4	18.6	
Avg Preburn Moisture (% DB):	21.41		

Coal Bed Range (lb):	2.4 (min)	3.1 (max)

			Temperatures (°F)							
Elapsed Time (min)	Scale (lb)	Stack Draft (in H_2O)	FB Top	FB Bottom	FB Back	FB Left	FB Right	Avg. FB	Stack	Ambient
0	3.3	-0.052	733	605	329	515	553	547	341	77
1	3.2	-0.051	727	606	327	514	551	545	332	77
2	3.1	-0.051	720	607	324	513	550	542.8	334	76
3	3.1	-0.051	713	607	323	511	549	540.6	337	76
4	3	-0.051	707	607	321	510	545	538	333	76
5	3	-0.042	700	607	326	517	542	538.4	268	76
6	2.9	-0.041	693	607	333	520	540	538.6	228	77
7	2.9	-0.038	686	607	339	519	535	537.2	208	77
8	2.9	-0.037	681	607	343	515	529	535	194	77
9	2.9	-0.035	675	606	347	511	522	532.2	182	77
10	2.9	-0.034	670	604	349	505	514	528.4	173	77
11	2.9	-0.033	664	603	351	500	507	525	166	77
12	2.9	-0.032	658	601	351	493	500	520.6	160	76
13	2.9	-0.031	651	599	351	488	492	516.2	155	77
14	2.9	-0.03	646	597	350	482	486	512.2	149	77
15	2.9	-0.029	640	595	350	476	479	508	145	77
16	2.9	-0.028	634	592	349	470	472	503.4	142	77
17	2.9	-0.026	628	589	347	463	466	498.6	140	76
18	2.8	-0.024	622	587	345	457	460	494.2	136	77
19	2.8	-0.023	616	584	344	452	453	489.8	134	76
20	2.8	-0.025	609	581	341	447	448	485.2	132	77
21	2.8	-0.019	602	577	339	440	442	480	129	76
22	2.8	-0.019	596	574	337	435	436	475.6	128	77
23	2.8	-0.018	589	571	333	429	430	470.4	126	77
24	2.8	-0.017	583	568	331	424	425	466.2	124	77
25	2.8	-0.017	576	565	329	419	420	461.8	122	77
26	2.8	-0.016	569	561	326	414	414	456.8	122	76
27	2.8	-0.016	563	558	324	410	409	452.8	121	77
28	2.8	-0.016	556	555	322	405	405	448.6	118	77
29	2.8	-0.015	550	552	319	401	400	444.4	117	77
30	2.8	-0.015	544	549	316	397	396	440.4	116	77
31	2.8	-0.014	537	546	314	392	391	436	115	77
32	2.8	-0.013	531	542	311	388	386	431.6	114	77
33	2.8	-0.014	525	539	309	383	382	427.6	115	77
34	2.8	-0.013	519	536	306	379	377	423.4	113	77
35	2.8	-0.013	512	532	304	375	373	419.2	112	77
36	2.8	-0.012	507	529	301	372	369	415.6	111	77
37	2.8	-0.012	501	526	299	367	365	411.6	111	77
38	2.8	-0.012	495	523	296	363	360	407.4	110	77

Wood Heater Preburn Data - ASTM E2780

Run:	4

Technician Signature: _____

Manufacturer:	Valley Comfort
Model:	20.2 Series
Tracking No.:	2253
Project No.:	0142WS013E
Test Date:	8/24/17
Beginning Clock Time:	8:25

Preburn Fuel Data

Fuel Piece Lengths (in.):	13		
Total Preburn Weight (lb):	14.7		
uel Moisture Readings (% DB):	20	22.5	24.2
	24.2	19	20.8
	22.4	20	
	22.4	18.6	
Avg Preburn Moisture (% DB):	21.41		

Coal Bed Range (lb):	2.4 (min)	3.1 (max)

			Temperatures (°F)							
Elapsed Time (min)	Scale (lb)	Stack Draft (in H_2O)	FB Top	FB Bottom	FB Back	FB Left	FB Right	Avg. FB	Stack	Ambient
39	2.8	-0.013	489	519	294	359	356	403.4	110	77
40	2.9	-0.013	484	516	291	356	352	399.8	110	77
41	2.9	-0.012	478	513	288	352	348	395.8	108	77
42	2.9	-0.012	472	510	286	348	344	392	107	77
43	2.9	-0.012	467	507	284	345	341	388.8	107	76
44	2.9	-0.011	461	504	281	341	337	384.8	106	77
45	2.9	-0.011	456	500	279	337	333	381	106	77
46	2.9	-0.01	451	497	276	333	329	377.2	105	77
47	2.9	-0.01	446	494	274	331	326	374.2	105	77
48	2.9	-0.01	441	491	272	326	322	370.4	104	77
49	2.9	-0.01	436	488	270	323	319	367.2	104	77
50	2.9	-0.01	431	485	267	320	316	363.8	104	77
51	2.9	-0.009	426	482	265	317	312	360.4	104	77
52	2.9	-0.009	422	479	262	314	309	357.2	103	77
53	2.9	-0.009	418	476	260	311	306	354.2	48	77
54	3	-0.01	414	473	258	308	303	351.2	3218	77
55	2.9	-0.009	410	471	256	305	301	348.6	3218	77
56	2.9	-0.009	406	468	253	302	298	345.4	3218	77
57	2.9	-0.009	403	465	252	300	295	343	3218	77
58	2.9	-0.009	401	463	250	297	292	340.6	84	77
59	3	-0.009	398	461	248	294	290	338.2	79	77
60	3	-0.009	396	458	246	292	288	336	88	77
61	3	-0.01	394	456	244	290	285	333.8	109	77
62	3	-0.009	393	454	244	288	283	332.4	120	77
63	3	-0.009	393	452	242	286	281	330.8	127	77
64	3	-0.009	392	451	241	284	279	329.4	131	77
65	3	-0.009	391	449	240	282	278	328	135	76
66	3	-0.009	390	447	240	281	276	326.8	138	77
67	3	-0.009	389	446	239	280	274	325.6	139	77
68	3	-0.01	388	445	240	279	273	325	140	77
69	3	-0.01	387	444	240	278	272	324.2	141	77
70	3	-0.01	385	443	240	278	271	323.4	142	76
71	3	-0.01	384	442	241	277	271	323	144	77
72	3	-0.01	383	441	242	277	270	322.6	145	77
73	3	-0.01	381	441	242	277	269	322	146	77
74	3	-0.01	380	440	244	276	268	321.6	147	77
75	3	-0.01	379	440	244	276	268	321.4	147	77

Wood Heater Test Fuel Data - ASTM E2780

Manufacturer:	Valley Comfort	PB Time	7:00	12% Cal:	12.0
Model:	20.2 Series	PB Temp	75	22% Cal:	22.0
Tracking No.:	2253				
Project No.:	0142WS013E	Test Time	7:00		
Test Date:	8/24/2017	Test Temp	75		
Run No.:	4				

Firebox Volume (ft^3):	1.82
Fuel Piece Length (in):	13
2x4 Crib Weight (lb):	5.6
4x4 Crib Weight (lb):	6.6

Total Fuel Weight (Dry Basis, lb):	10.0	
Fuel Density (lb/ft^3, Dry Basis):	28.46	OK
Loading Density (lb/ft^3, Wet Basis):	6.70	OK
2x4 Percentage:	46%	OK

Coal Bed Range (20-25%): 2.44 - 3.05

Test Fuel Piece	Weight (lb)	Size	Readings (Dry Basis %)			Dry Weight (lb)
1	1.5	2"x 4"	19.9	24.8	24.9	1.22
2	1.4	2"x 4"	22.3	22.4	24.6	1.14
3	1.4	2"x 4"	22.7	22.5	21.5	1.15
4	2.9	4"x 4"	22.7	22.0	21.9	2.37
5	3.3	4"x 4"	19.7	20.8	20.4	2.74

Spacer Readings (Dry Basis %)			
15.9	17.2		
18.6	16.4		
22.9	19.9		
23.1	20.2		
18.5	15.7		
19.7	18.9		
21.2			
16.0			
21.0			
19.7			

Technician Signature: _____

Wood Heater Test Data - ASTM E2780 / ASTM E2515

Run: 4

Manufacturer: Valley Comfort
Model: 20.2 Series
Tracking No.: 2253
Project No.: 0142WS013E
Test Date: 24-Aug-17
Beginning Clock Time: 09:40

Total Sampling Time: 454 min
Recording Interval: 1 min
Background Sample Volume: _____ cubic feet

Meter Box Y Factor: 1.003 (1) 0.997 (2) _____ (Amb)

Barometric Pressure:	Begin	Middle	End	Average
	28.58	28.62	28.59	28.60 "Hg

OMNI Equipment Numbers: 464,410,132,576,318,432,419,371,372,432,296-T55,567,413,592

PM Control Modules:
Dilution Tunnel MW(dry): 29.00 lb/lb-mole
Dilution Tunnel MW(wet): 28.78 lb/lb-mole
Dilution Tunnel H2O: 2.00 percent
Dilution Tunnel Static: -0.170 "H2O
Tunnel Area: 0.19635 ft2
Pitot Tube Cp: 0.99

Avg. Tunnel Velocity: 13.16 ft/sec.
Initial Tunnel Flow: 139.4 scfm
Average Tunnel Flow: 140.7 scfm
Post-Test Leak Check (1): 0.000 cfm @ -15 in. Hg
Post-Test Leak Check (2): 0.000 cfm @ -17 in. Hg
Average Test Piece Fuel Moisture: 22.21 Dry Basis %

Technician Signature: _____

Velocity Traverse Data

	Pt.1	Pt.2	Pt.3	Pt.4	Pt.5	Pt.6	Pt.7	Pt.8	Center	
Initial dP	0.030	0.046	0.044	0.026	0.024	0.044	0.046	0.028	0.046	"H2O
Temp:	78	78	78	78	78	78	78	78	78	°F

V_{strav} 13.08 ft/sec V_{scent} 14.68 ft/sec F_p 0.891

Elapsed Time (min)	Particulate Sampling Data: Gas Meter 1 (ft^3)	Gas Meter 2 (ft^3)	Sample Rate 1 (cfm)	Sample Rate 2 (cfm)	Orifice dH 1 ("H_2O)	Meter 1 Temp (°F)	Meter 1 Vacuum ("Hg)	Orifice dH 2 ("H_2O)	Meter 2 Temp (°F)	Meter 2 Vacuum ("Hg)	Dilution Tunnel (°F)	Dilution Tunnel Center dP	Pro. Rate 1	Pro. Rate 2	Fuel Weight (lb): Scale Reading	Weight Change	Temperature Data (°F): Firebox Top	Firebox Bottom	Firebox Back	Firebox Left	Firebox Right	Avg. Stove Surface	Catalyst Exit	Stack	Filter 1	Dryer Exit 1	Filter 2	Dryer Exit 2	Ambient	Stack Gas Data: Draft ("H_2O)	CO_2 (%)	CO (%)
0	0.000	0.000			-0.03	73	1.52	0.34	73	1.5	87	0.046			12.2		382	440	255	277	269	325	503	317	75	67	75	72	77	-0.022	1.33	0.29
1	0.145	0.147	0.15	0.15	1.84	73	-1.29	1.42	73	-0.7	89	0.046	99	98	12.2	0	377	441	260	275	268	324	435	317	75	67	75	69	76	-0.046	0.91	0.24
2	0.293	0.300	0.15	0.15	1.84	73	-1.3	1.44	73	-0.7	88	0.046	101	102	12.2	0	373	441	263	274	267	324	423	288	75	67	75	69	77	-0.047	1.58	0.44
3	0.441	0.451	0.15	0.15	1.83	73	-1.31	1.43	73	-0.8	89	0.046	101	101	12.1	-0.1	370	440	264	274	267	323	434	292	76	67	75	69	76	-0.049	4.04	0.4
4	0.590	0.602	0.15	0.15	1.82	73	-1.31	1.41	73	-0.8	91	0.046	102	101	12.0	-0.1	373	438	264	274	268	323	538	329	76	67	76	69	77	-0.054	5.36	0.23
5	0.737	0.754	0.15	0.15	1.82	73	-1.3	1.42	72	-0.7	89	0.046	101	102	12.2	0.2	381	436	263	274	268	324	637	373	76	67	76	69	77	-0.051	6.1	0.05
6	0.885	0.904	0.15	0.15	1.81	73	-1.3	1.42	72	-0.7	85	0.046	101	100	11.9	-0.3	387	435	262	273	268	325	678	326	76	67	76	69	76	-0.049	5.65	0
7	1.033	1.055	0.15	0.15	1.81	73	-1.3	1.41	72	-0.7	83	0.046	101	100	11.8	-0.1	394	433	262	272	268	326	681	298	76	67	76	69	76	-0.048	4.74	0
8	1.180	1.207	0.15	0.15	1.80	73	-1.29	1.41	72	-0.7	83	0.046	100	101	11.8	0	399	432	262	271	268	326	666	282	76	67	75	69	76	-0.047	4.79	0
9	1.328	1.357	0.15	0.15	1.80	73	-1.28	1.41	71	-0.7	83	0.046	101	100	11.8	0	402	430	260	269	268	326	656	271	76	67	75	69	76	-0.047	4.82	0
10	1.475	1.508	0.15	0.15	1.79	73	-1.28	1.40	71	-0.7	82	0.046	100	101	11.7	-0.1	405	429	259	268	268	326	649	265	76	68	75	69	76	-0.046	4.77	0
11	1.622	1.658	0.15	0.15	1.78	73	-1.27	1.40	71	-0.7	82	0.046	100	100	11.7	0	407	428	257	267	267	325	646	260	76	68	75	69	76	-0.046	4.93	0
12	1.769	1.809	0.15	0.15	1.77	73	-1.27	1.41	71	-0.7	82	0.046	100	101	11.6	-0.1	410	427	256	265	267	325	645	255	76	68	75	69	76	-0.046	4.97	0
13	1.916	1.959	0.15	0.15	1.78	73	-1.27	1.40	70	-0.7	82	0.046	100	100	11.6	0	412	425	255	264	267	325	646	252	76	68	75	69	76	-0.045	5.08	0
14	2.063	2.109	0.15	0.15	1.77	72	-1.26	1.39	70	-0.7	81	0.046	100	100	11.5	-0.1	414	424	253	263	266	324	647	248	76	68	75	69	76	-0.045	5.22	-0.01
15	2.210	2.260	0.15	0.15	1.76	72	-1.26	1.40	70	-0.7	81	0.046	100	101	11.5	0	416	423	252	262	266	324	650	246	76	68	75	69	77	-0.045	5.2	-0.01
16	2.357	2.410	0.15	0.15	1.77	72	-1.26	1.40	70	-0.7	81	0.046	100	100	11.5	0	418	422	250	261	266	323	654	243	76	68	75	69	76	-0.045	5.38	-0.01
17	2.503	2.560	0.15	0.15	1.77	72	-1.26	1.39	69	-0.7	81	0.046	100	100	11.4	-0.1	421	421	249	260	265	323	658	241	75	68	75	69	77	-0.045	5.2	-0.01
18	2.650	2.710	0.15	0.15	1.76	72	-1.25	1.38	69	-0.7	81	0.046	100	100	11.4	0	423	420	248	259	265	323	659	238	75	68	75	69	76	-0.044	5.21	-0.01
19	2.797	2.860	0.15	0.15	1.77	72	-1.25	1.40	69	-0.7	81	0.046	100	100	11.3	-0.1	425	420	246	258	265	323	657	236	75	68	75	69	77	-0.044	5.21	-0.01
20	2.943	3.009	0.15	0.15	1.77	72	-1.26	1.39	69	-0.7	81	0.046	100	100	11.3	0	427	419	245	257	265	323	655	234	75	68	75	69	76	-0.044	5.35	-0.01
21	3.090	3.159	0.15	0.15	1.76	72	-1.25	1.38	69	-0.7	80	0.046	100	100	11.3	0	428	418	244	256	264	322	653	231	75	69	75	69	76	-0.043	5.21	-0.01
22	3.237	3.309	0.15	0.15	1.76	72	-1.25	1.38	69	-0.7	80	0.046	100	100	11.2	-0.1	430	417	242	256	264	322	653	229	75	69	75	69	77	-0.043	5.4	-0.01
23	3.383	3.459	0.15	0.15	1.77	72	-1.24	1.39	68	-0.7	80	0.046	99	100	11.2	0	431	417	241	255	264	322	652	227	75	69	75	69	77	-0.043	5.34	-0.01
24	3.530	3.608	0.15	0.15	1.77	72	-1.24	1.39	68	-0.7	80	0.046	100	100	11.2	0	432	416	240	254	263	321	649	224	75	69	75	69	76	-0.043	5.19	-0.01
25	3.677	3.758	0.15	0.15	1.76	72	-1.25	1.37	68	-0.7	80	0.046	100	100	11.1	-0.1	433	415	239	254	263	321	648	223	75	69	75	70	76	-0.043	5.19	-0.01
26	3.823	3.909	0.15	0.15	1.77	72	-1.25	1.39	68	-0.7	80	0.046	99	101	11.1	0	433	415	238	253	263	320	647	220	75	69	75	70	76	-0.043	5.1	-0.01
27	3.970	4.058	0.15	0.15	1.77	72	-1.25	1.39	68	-0.7	79	0.046	100	100	11.0	-0.1	434	414	237	252	262	320	646	217	75	69	75	70	76	-0.042	5.12	-0.01
28	4.117	4.208	0.15	0.15	1.77	72	-1.24	1.38	68	-0.7	80	0.046	100	100	11.0	0	433	413	236	252	262	319	646	213	75	69	75	70	76	-0.042	5	-0.01
29	4.264	4.357	0.15	0.15	1.76	72	-1.24	1.37	68	-0.7	80	0.046	100	100	11.0	0	434	412	235	251	262	319	646	211	75	69	75	70	76	-0.041	5.1	-0.01
30	4.411	4.508	0.15	0.15	1.78	72	-1.25	1.38	67	-0.7	79	0.046	100	101	11.0	0	430	411	230	250	261	316	645	208	75	70	75	70	76	-0.032	5.02	-0.01
31	4.557	4.657	0.15	0.15	1.78	72	-1.25	1.39	67	-0.7	80	0.046	99	100	10.9	-0.1	428	411	226	248	260	315	645	205	75	70	75	70	76	-0.031	5.02	-0.01
32	4.704	4.807	0.15	0.15	1.77	72	-1.25	1.38	67	-0.7	80	0.046	100	100	10.9	0	426	410	222	246	258	312	645	204	75	70	75	70	76	-0.031	5.08	-0.01
33	4.851	4.957	0.15	0.15	1.77	72	-1.25	1.38	67	-0.7	80	0.046	100	100	10.9	0	424	409	219	244	256	310	645	203	75	70	75	70	76	-0.031	5.12	-0.01
34	4.998	5.107	0.15	0.15	1.78	72	-1.25	1.39	67	-0.7	80	0.046	100	100	10.9	0	422	408	215	243	255	309	647	201	75	70	75	70	77	-0.030	5.15	-0.01
35	5.145	5.256	0.15	0.15	1.77	72	-1.24	1.39	67	-0.7	80	0.046	100	100	10.8	-0.1	421	407	212	241	253	307	649	201	75	70	75	70	77	-0.030	5.23	-0.01
36	5.291	5.406	0.15	0.15	1.77	72	-1.25	1.37	67	-0.7	80	0.046	99	100	10.8	0	420	406	209	239	251	305	650	203	75	70	75	70	76	-0.030	5.3	-0.01

Wood Heater Test Data - ASTM E2780 / ASTM E2515

Run: 4

Manufacturer: Valley Comfort
Model: 20.2 Series
Tracking No.: 2253
Project No.: 0142WS013E
Test Date: 24-Aug-17
Beginning Clock Time: 09:40

Total Sampling Time: 454 min
Recording Interval: 1 min
Background Sample Volume: _____ cubic feet

Meter Box Y Factor: 1.003 (1) 0.997 (2) _____ (Amb)

Barometric Pressure:	Begin	Middle	End	Average
	28.58	28.62	28.59	28.60 "Hg

OMNI Equipment Numbers: 464,410,132,576,318,432,419,371,372,432,296-T55,567,413,592

PM Control Modules:
Dilution Tunnel MW(dry): 29.00 lb/lb-mole
Dilution Tunnel MW(wet): 28.78 lb/lb-mole
Dilution Tunnel H2O: 2.00 percent
Dilution Tunnel Static: -0.170 "H2O
Tunnel Area: 0.19635 ft2
Pitot Tube Cp: 0.99

Avg. Tunnel Velocity: 13.16 ft/sec.
Initial Tunnel Flow: 139.4 scfm
Average Tunnel Flow: 140.7 scfm
Post-Test Leak Check (1): 0.000 cfm @ -15 in. Hg
Post-Test Leak Check (2): 0.000 cfm @ -17 in. Hg
Average Test Piece Fuel Moisture: 22.21 Dry Basis %

Technician Signature: _____

Velocity Traverse Data

	Pt.1	Pt.2	Pt.3	Pt.4	Pt.5	Pt.6	Pt.7	Pt.8	Center	
Initial dP	0.030	0.046	0.044	0.026	0.024	0.044	0.046	0.028	0.046	"H2O
Temp:	78	78	78	78	78	78	78	78	78	°F

V_{strav} 13.08 ft/sec V_{scent} 14.68 ft/sec F_p 0.891

	Particulate Sampling Data														Fuel Weight (lb)		Temperature Data (°F)													Stack Gas Data		
Elapsed Time (min)	Gas Meter 1 (ft^3)	Gas Meter 2 (ft^3)	Sample Rate 1 (cfm)	Sample Rate 2 (cfm)	Orifice dH 1 ("H_2O)	Meter 1 Temp (°F)	Meter 1 Vacuum ("Hg)	Orifice dH 2 ("H_2O)	Meter 2 Temp (°F)	Meter 2 Vacuum ("Hg)	Dilution Tunnel (°F)	Dilution Tunnel Center dP	Pro. Rate 1	Pro. Rate 2	Scale Reading	Weight Change	Firebox Top	Firebox Bottom	Firebox Back	Firebox Left	Firebox Right	Avg. Stove Surface	Catalyst Exit	Stack	Filter 1	Dryer Exit 1	Filter 2	Dryer Exit 2	Ambient	Draft ("H_2O)	CO_2 (%)	CO (%)
37	5.438	5.556	0.15	0.15	1.77	72	-1.25	1.38	67	-0.7	80	0.046	100	100	10.8	0	419	405	207	238	249	304	650	204	75	70	75	71	77	-0.030	5.32	-0.01
38	5.585	5.706	0.15	0.15	1.77	72	-1.24	1.39	67	-0.7	80	0.046	100	100	10.7	-0.1	417	404	204	236	248	302	651	206	75	70	75	71	76	-0.031	5.47	-0.01
39	5.732	5.856	0.15	0.15	1.77	72	-1.24	1.37	67	-0.7	80	0.046	100	100	10.7	0	416	403	202	235	246	300	654	210	75	71	75	71	76	-0.031	5.63	-0.01
40	5.879	6.006	0.15	0.15	1.78	72	-1.25	1.38	67	-0.7	80	0.046	100	100	10.7	0	416	402	200	234	245	299	659	214	75	71	75	71	77	-0.031	5.86	-0.01
41	6.026	6.156	0.15	0.15	1.77	72	-1.26	1.39	67	-0.7	80	0.046	100	100	10.6	-0.1	416	401	198	233	244	298	668	218	75	71	75	71	77	-0.031	6.38	-0.01
42	6.173	6.305	0.15	0.15	1.77	72	-1.25	1.39	67	-0.7	80	0.046	100	100	10.6	0	417	400	196	232	244	298	681	224	75	71	75	71	76	-0.032	6.94	-0.01
43	6.320	6.455	0.15	0.15	1.76	72	-1.25	1.37	67	-0.7	81	0.046	100	101	10.5	-0.1	419	399	194	232	244	298	696	233	75	71	75	71	76	-0.032	7.38	-0.01
44	6.467	6.605	0.15	0.15	1.77	72	-1.25	1.38	67	-0.7	81	0.046	100	101	10.5	0	423	398	192	232	245	298	711	238	75	71	75	71	77	-0.033	7.53	-0.01
45	6.613	6.756	0.15	0.15	1.77	72	-1.25	1.39	67	-0.7	81	0.046	100	101	10.4	-0.1	427	396	191	232	247	299	724	243	75	71	75	71	77	-0.034	7.89	-0.01
46	6.760	6.905	0.15	0.15	1.76	72	-1.25	1.38	67	-0.7	81	0.046	100	100	10.4	0	432	395	189	232	249	299	735	248	75	71	75	71	76	-0.033	8.18	-0.01
47	6.907	7.055	0.15	0.15	1.77	72	-1.25	1.37	67	-0.7	82	0.046	100	101	10.3	-0.1	438	394	188	234	251	301	753	252	75	71	75	71	76	-0.034	8.45	-0.01
48	7.054	7.205	0.15	0.15	1.76	72	-1.25	1.37	67	-0.7	83	0.046	100	101	10.2	-0.1	444	393	186	234	254	302	760	255	75	71	75	71	76	-0.034	7.01	-0.01
49	7.201	7.355	0.15	0.15	1.76	72	-1.26	1.39	67	-0.7	84	0.046	101	101	10.2	0	448	392	185	235	257	303	751	257	75	71	75	71	76	-0.033	6.14	-0.01
50	7.348	7.504	0.15	0.15	1.75	72	-1.25	1.38	67	-0.7	84	0.046	101	100	10.1	-0.1	450	391	184	236	259	304	737	259	75	71	75	71	76	-0.034	5.44	-0.01
51	7.495	7.654	0.15	0.15	1.76	72	-1.26	1.37	68	-0.7	84	0.046	101	101	10.1	0	451	389	183	236	260	304	720	260	75	71	75	71	77	-0.034	5.23	-0.01
52	7.642	7.804	0.15	0.15	1.75	72	-1.26	1.38	68	-0.7	84	0.046	101	101	10.1	0	451	388	182	237	261	304	706	259	75	71	75	71	76	-0.034	5.07	-0.01
53	7.788	7.953	0.15	0.15	1.75	72	-1.26	1.39	68	-0.7	85	0.046	100	100	10.1	0	450	387	181	237	262	303	696	257	75	71	76	72	77	-0.033	4.75	-0.01
54	7.935	8.103	0.15	0.15	1.76	73	-1.26	1.38	68	-0.7	85	0.046	100	101	10.0	-0.1	449	386	181	237	262	303	689	256	75	71	76	72	76	-0.034	4.74	-0.01
55	8.082	8.253	0.15	0.15	1.76	73	-1.27	1.37	68	-0.7	86	0.046	101	101	10.0	0	448	385	180	237	262	302	683	255	75	71	76	72	76	-0.034	4.71	-0.01
56	8.229	8.403	0.15	0.15	1.75	73	-1.26	1.38	68	-0.7	86	0.046	101	101	9.9	-0.1	446	384	179	237	262	302	679	255	75	71	76	72	77	-0.034	4.71	-0.01
57	8.375	8.552	0.15	0.15	1.76	73	-1.26	1.38	68	-0.7	85	0.046	100	100	9.9	0	444	384	178	237	262	301	677	255	76	71	76	72	77	-0.033	4.64	-0.01
58	8.522	8.702	0.15	0.15	1.76	73	-1.26	1.36	69	-0.7	85	0.046	100	101	9.9	0	443	383	178	237	262	301	676	255	76	71	76	72	76	-0.033	4.75	-0.01
59	8.669	8.851	0.15	0.15	1.75	73	-1.26	1.37	69	-0.7	85	0.046	100	100	9.8	-0.1	441	382	177	236	261	299	676	255	76	72	76	72	77	-0.033	4.62	-0.01
60	8.816	9.002	0.15	0.15	1.75	73	-1.26	1.38	69	-0.7	85	0.046	100	101	9.8	0	440	381	176	236	260	299	677	253	76	72	76	72	76	-0.033	4.69	-0.01
61	8.964	9.151	0.15	0.15	1.80	73	-1.12	1.38	69	-0.7	85	0.046	101	100	9.8	0	439	380	176	236	260	298	677	255	76	72	76	72	77	-0.033	4.75	-0.01
62	9.111	9.301	0.15	0.15	1.75	73	-1.25	1.37	69	-0.7	85	0.046	100	101	9.8	0	438	380	175	236	259	298	677	255	77	72	76	72	77	-0.033	4.74	-0.01
63	9.259	9.450	0.15	0.15	1.75	74	-1.24	1.37	69	-0.7	86	0.046	101	100	9.7	-0.1	437	379	174	235	258	297	676	255	77	72	77	72	77	-0.033	4.77	-0.01
64	9.405	9.601	0.15	0.15	1.75	74	-1.24	1.38	69	-0.7	86	0.046	100	101	9.7	0	436	379	173	234	257	296	679	255	77	72	77	72	77	-0.033	4.84	-0.01
65	9.553	9.750	0.15	0.15	1.75	74	-1.24	1.37	69	-0.7	86	0.046	101	100	9.7	0	435	379	173	235	256	296	681	256	77	72	77	72	77	-0.033	4.92	-0.01
66	9.700	9.899	0.15	0.15	1.74	74	-1.24	1.37	69	-0.7	86	0.046	100	100	9.6	-0.1	435	378	172	234	256	295	687	257	77	72	77	73	76	-0.033	5.05	-0.01
67	9.847	10.049	0.15	0.15	1.75	74	-1.24	1.37	69	-0.7	86	0.046	100	101	9.6	0	435	378	172	234	255	295	692	259	77	72	77	73	76	-0.033	5.11	-0.01
68	9.995	10.199	0.15	0.15	1.75	74	-1.24	1.38	69	-0.7	86	0.046	101	101	9.5	-0.1	435	378	172	234	254	295	700	261	77	72	77	73	77	-0.033	5.32	-0.01
69	10.142	10.349	0.15	0.15	1.75	74	-1.25	1.37	69	-0.7	86	0.046	100	101	9.5	0	437	378	171	234	254	295	727	267	77	72	77	73	77	-0.034	7.9	-0.01
70	10.289	10.498	0.15	0.15	1.75	74	-1.25	1.36	69	-0.8	87	0.046	100	100	9.4	-0.1	443	377	171	235	255	296	793	279	77	72	77	73	77	-0.035	8.97	0.43
71	10.436	10.649	0.15	0.15	1.74	74	-1.25	1.37	69	-0.8	87	0.046	100	101	9.3	-0.1	453	377	172	237	258	299	860	292	77	72	77	73	77	-0.036	8.99	0.79
72	10.583	10.798	0.15	0.15	1.75	74	-1.25	1.38	69	-0.8	87	0.046	100	100	9.2	-0.1	464	377	172	238	260	302	895	302	77	72	77	73	78	-0.037	9.09	0.64
73	10.731	10.947	0.15	0.15	1.75	74	-1.25	1.37	69	-0.8	88	0.046	101	100	9.1	-0.1	476	377	173	240	263	306	915	311	77	72	77	73	77	-0.037	8.96	0.71

Wood Heater Test Data - ASTM E2780 / ASTM E2515

Run: 4

Manufacturer: Valley Comfort
Model: 20.2 Series
Tracking No.: 2253
Project No.: 0142WS013E
Test Date: 24-Aug-17
Beginning Clock Time: 09:40

Total Sampling Time: 454 min
Recording Interval: 1 min
Background Sample Volume: _____ cubic feet

Meter Box Y Factor: 1.003 (1) 0.997 (2) _____ (Amb)

Barometric Pressure:	Begin	Middle	End	Average
	28.58	28.62	28.59	28.60 "Hg

OMNI Equipment Numbers: 464,410,132,576,318,432,419,371,372,432,296-T55,567,413,592

PM Control Modules:
Dilution Tunnel MW(dry): 29.00 lb/lb-mole
Dilution Tunnel MW(wet): 28.78 lb/lb-mole
Dilution Tunnel H2O: 2.00 percent
Dilution Tunnel Static: -0.170 "H2O
Tunnel Area: 0.19635 ft2
Pitot Tube Cp: 0.99

Avg. Tunnel Velocity: 13.16 ft/sec.
Initial Tunnel Flow: 139.4 scfm
Average Tunnel Flow: 140.7 scfm
Post-Test Leak Check (1): 0.000 cfm @ -15 in. Hg
Post-Test Leak Check (2): 0.000 cfm @ -17 in. Hg
Average Test Piece Fuel Moisture: 22.21 Dry Basis %

Technician Signature: _____

Velocity Traverse Data

	Pt.1	Pt.2	Pt.3	Pt.4	Pt.5	Pt.6	Pt.7	Pt.8	Center	
Initial dP	0.030	0.046	0.044	0.026	0.024	0.044	0.046	0.028	0.046	"H2O
Temp:	78	78	78	78	78	78	78	78	78	°F

V_{strav} 13.08 ft/sec V_{scent} 14.68 ft/sec F_p 0.891

	Particulate Sampling Data														Fuel Weight (lb)		Temperature Data (°F)													Stack Gas Data		
Elapsed Time (min)	Gas Meter 1 (ft^3)	Gas Meter 2 (ft^3)	Sample Rate 1 (cfm)	Sample Rate 2 (cfm)	Orifice dH 1 ("H_2O)	Meter 1 Temp (°F)	Meter 1 Vacuum ("Hg)	Orifice dH 2 ("H_2O)	Meter 2 Temp (°F)	Meter 2 Vacuum ("Hg)	Dilution Tunnel (°F)	Dilution Tunnel Center dP	Pro. Rate 1	Pro. Rate 2	Scale Reading	Weight Change	Firebox Top	Firebox Bottom	Firebox Back	Firebox Left	Firebox Right	Avg. Stove Surface	Catalyst Exit	Stack	Filter 1	Dryer Exit 1	Filter 2	Dryer Exit 2	Ambient	Draft ("H_2O)	CO_2 (%)	CO (%)
74	10.878	11.097	0.15	0.15	1.76	74	-1.25	1.36	69	-0.8	88	0.046	101	101	9.0	-0.1	487	377	174	242	266	309	933	318	77	73	77	73	78	-0.039	9.09	0.9
75	11.025	11.247	0.15	0.15	1.75	74	-1.26	1.37	69	-0.8	89	0.046	101	101	8.9	-0.1	499	378	175	244	270	313	950	325	77	73	77	73	78	-0.039	9.13	1.16
76	11.172	11.396	0.15	0.15	1.75	74	-1.25	1.38	69	-0.8	89	0.046	101	100	8.8	-0.1	510	378	175	247	273	317	955	327	77	73	77	73	78	-0.038	8.93	0.82
77	11.319	11.546	0.15	0.15	1.76	74	-1.25	1.36	69	-0.8	89	0.046	101	101	8.8	0	519	379	177	249	276	320	949	329	77	73	77	73	78	-0.039	8.68	0.7
78	11.466	11.696	0.15	0.15	1.75	74	-1.26	1.36	69	-0.8	89	0.046	101	101	8.7	-0.1	526	380	178	251	280	323	939	327	77	73	78	73	77	-0.038	8.66	0.5
79	11.613	11.846	0.15	0.15	1.75	74	-1.25	1.38	69	-0.8	89	0.046	101	101	8.6	-0.1	532	381	179	254	283	326	930	324	78	73	78	74	78	-0.038	8.42	0.35
80	11.760	11.995	0.15	0.15	1.76	74	-1.25	1.38	69	-0.8	89	0.046	101	100	8.5	-0.1	536	382	180	257	285	328	921	321	78	73	78	74	78	-0.037	8.05	0.16
81	11.907	12.145	0.15	0.15	1.77	74	-1.26	1.36	69	-0.8	88	0.046	101	101	8.5	0	540	383	180	258	287	330	912	316	78	73	78	74	78	-0.037	7.84	0.09
82	12.055	12.294	0.15	0.15	1.76	74	-1.25	1.36	69	-0.8	88	0.046	101	100	8.4	-0.1	543	384	181	261	288	331	899	311	78	73	78	74	78	-0.036	7.59	0.03
83	12.202	12.445	0.15	0.15	1.77	74	-1.25	1.38	69	-0.8	89	0.046	101	102	8.4	0	544	386	182	262	289	333	886	307	78	73	78	74	78	-0.036	7.39	0.01
84	12.349	12.594	0.15	0.15	1.77	74	-1.25	1.38	69	-0.8	88	0.046	101	100	8.3	-0.1	544	387	182	263	289	333	874	302	78	73	78	74	78	-0.036	7.16	0
85	12.496	12.743	0.15	0.15	1.76	74	-1.25	1.36	69	-0.8	88	0.046	101	100	8.3	0	544	388	183	265	289	334	862	296	78	73	78	74	78	-0.037	7.05	0
86	12.643	12.893	0.15	0.15	1.77	74	-1.26	1.36	69	-0.8	88	0.046	101	101	8.2	-0.1	543	389	183	266	290	334	850	289	78	73	78	74	78	-0.035	6.65	-0.01
87	12.791	13.043	0.15	0.15	1.77	74	-1.25	1.37	69	-0.8	88	0.046	101	101	8.2	0	542	390	184	267	290	335	839	285	78	73	78	74	78	-0.035	6.57	-0.01
88	12.938	13.192	0.15	0.15	1.77	74	-1.25	1.37	69	-0.8	87	0.046	100	100	8.1	-0.1	540	390	184	267	290	334	830	279	78	73	78	74	78	-0.035	6.19	-0.01
89	13.085	13.342	0.15	0.15	1.77	75	-1.25	1.36	70	-0.8	87	0.046	100	101	8.1	0	538	391	184	268	290	334	820	274	78	74	78	74	78	-0.035	6.19	-0.01
90	13.233	13.492	0.15	0.15	1.77	75	-1.25	1.37	70	-0.8	87	0.046	101	101	8.1	0	536	391	184	268	290	334	811	271	78	74	78	74	78	-0.035	6.14	-0.01
91	13.380	13.642	0.15	0.15	1.77	75	-1.26	1.37	69	-0.8	87	0.046	100	101	8.0	-0.1	533	392	185	269	290	334	803	267	78	74	78	74	78	-0.034	6.12	-0.01
92	13.527	13.791	0.15	0.15	1.77	75	-1.24	1.37	69	-0.8	87	0.046	100	100	8.0	0	530	392	185	269	290	333	795	265	78	74	78	74	79	-0.035	6.23	-0.01
93	13.675	13.941	0.15	0.15	1.77	75	-1.25	1.36	70	-0.8	87	0.046	101	101	7.9	-0.1	528	392	185	270	290	333	790	262	78	74	78	74	78	-0.034	6.09	-0.01
94	13.822	14.092	0.15	0.15	1.77	75	-1.24	1.38	70	-0.8	87	0.046	100	101	7.9	0	526	393	185	270	290	333	785	260	78	74	78	74	78	-0.033	6.1	-0.01
95	13.969	14.241	0.15	0.15	1.78	75	-1.25	1.37	70	-0.8	88	0.046	100	100	7.9	0	523	393	185	270	289	332	781	260	78	74	78	74	77	-0.033	6.29	-0.01
96	14.116	14.391	0.15	0.15	1.76	75	-1.25	1.36	70	-0.8	87	0.046	100	101	7.8	-0.1	522	393	185	270	289	332	778	257	78	74	78	75	78	-0.032	6.29	-0.01
97	14.264	14.541	0.15	0.15	1.78	75	-1.24	1.36	70	-0.8	88	0.046	101	101	7.8	0	519	393	185	271	289	331	777	255	78	74	78	75	78	-0.032	6.26	-0.01
98	14.411	14.691	0.15	0.15	1.78	75	-1.25	1.38	70	-0.8	87	0.046	100	101	7.8	0	517	393	185	271	289	331	775	255	78	74	78	75	79	-0.032	6.42	-0.01
99	14.558	14.840	0.15	0.15	1.79	75	-1.26	1.38	70	-0.8	87	0.046	100	100	7.8	0	515	393	185	271	289	331	774	253	78	74	78	75	79	-0.032	6.38	-0.01
100	14.706	14.990	0.15	0.15	1.79	75	-1.25	1.37	70	-0.8	86	0.046	101	100	7.7	-0.1	514	392	185	271	289	330	774	253	78	74	78	75	78	-0.032	6.19	-0.01
101	14.853	15.140	0.15	0.15	1.79	75	-1.24	1.36	70	-0.8	87	0.046	100	101	7.7	0	512	392	185	270	289	330	774	251	78	74	78	75	79	-0.032	6.47	-0.01
102	15.000	15.291	0.15	0.15	1.78	75	-1.25	1.38	70	-0.8	86	0.046	100	101	7.6	-0.1	510	392	185	270	289	329	773	251	78	74	78	75	79	-0.031	6.52	-0.01
103	15.148	15.440	0.15	0.15	1.79	75	-1.25	1.37	70	-0.8	86	0.046	101	100	7.6	0	510	392	185	271	289	329	773	250	78	74	78	75	78	-0.032	6.54	-0.01
104	15.295	15.590	0.15	0.15	1.78	75	-1.25	1.37	70	-0.8	87	0.046	100	101	7.6	0	509	391	185	270	289	329	774	250	78	74	78	75	78	-0.032	6.56	-0.01
105	15.443	15.740	0.15	0.15	1.78	75	-1.24	1.36	70	-0.8	87	0.046	101	101	7.5	-0.1	508	391	185	271	289	329	776	250	78	74	78	75	79	-0.032	6.81	-0.01
106	15.590	15.890	0.15	0.15	1.78	75	-1.25	1.38	70	-0.8	87	0.046	100	101	7.5	0	507	391	185	270	290	329	780	248	78	74	78	75	78	-0.031	6.91	-0.01
107	15.737	16.040	0.15	0.15	1.78	75	-1.25	1.37	70	-0.8	88	0.046	100	101	7.5	0	506	390	185	271	290	328	787	250	78	74	78	75	79	-0.031	7.3	-0.01
108	15.885	16.189	0.15	0.15	1.77	75	-1.25	1.36	70	-0.8	87	0.046	101	100	7.4	-0.1	507	390	185	270	290	328	795	250	78	74	78	75	79	-0.032	7.46	-0.01
109	16.032	16.340	0.15	0.15	1.77	75	-1.25	1.37	70	-0.8	87	0.046	100	101	7.4	0	508	389	185	271	291	329	803	251	78	74	78	75	79	-0.032	7.61	-0.01
110	16.179	16.489	0.15	0.15	1.78	75	-1.24	1.37	70	-0.8	87	0.046	100	100	7.3	-0.1	510	389	185	271	291	329	811	252	78	74	78	75	79	-0.032	7.71	0

Wood Heater Test Data - ASTM E2780 / ASTM E2515

Run: 4

Manufacturer: Valley Comfort
Model: 20.2 Series
Tracking No.: 2253
Project No.: 0142WS013E
Test Date: 24-Aug-17
Beginning Clock Time: 09:40

Total Sampling Time: 454 min
Recording Interval: 1 min
Background Sample Volume: _____ cubic feet

Meter Box Y Factor: 1.003 (1) 0.997 (2) _____ (Amb)

Barometric Pressure:	Begin	Middle	End	Average
	28.58	28.62	28.59	28.60 "Hg

OMNI Equipment Numbers: 464,410,132,576,318,432,419,371,372,432,296-T55,567,413,592

PM Control Modules:
Dilution Tunnel MW(dry): 29.00 lb/lb-mole
Dilution Tunnel MW(wet): 28.78 lb/lb-mole
Dilution Tunnel H2O: 2.00 percent
Dilution Tunnel Static: -0.170 "H2O
Tunnel Area: 0.19635 ft2
Pitot Tube Cp: 0.99

Avg. Tunnel Velocity: 13.16 ft/sec.
Initial Tunnel Flow: 139.4 scfm
Average Tunnel Flow: 140.7 scfm
Post-Test Leak Check (1): 0.000 cfm @ -15 in. Hg
Post-Test Leak Check (2): 0.000 cfm @ -17 in. Hg
Average Test Piece Fuel Moisture: 22.21 Dry Basis %

Technician Signature: _____

Velocity Traverse Data

	Pt.1	Pt.2	Pt.3	Pt.4	Pt.5	Pt.6	Pt.7	Pt.8	Center	
Initial dP	0.030	0.046	0.044	0.026	0.024	0.044	0.046	0.028	0.046	"H2O
Temp:	78	78	78	78	78	78	78	78	78	°F

V_{strav} 13.08 ft/sec V_{scent} 14.68 ft/sec F_p 0.891

	Particulate Sampling Data														Fuel Weight (lb)		Temperature Data (°F)													Stack Gas Data		
Elapsed Time (min)	Gas Meter 1 (ft^3)	Gas Meter 2 (ft^3)	Sample Rate 1 (cfm)	Sample Rate 2 (cfm)	Orifice dH 1 ("H_2O)	Meter 1 Temp (°F)	Meter 1 Vacuum ("Hg)	Orifice dH 2 ("H_2O)	Meter 2 Temp (°F)	Meter 2 Vacuum ("Hg)	Dilution Tunnel (°F)	Dilution Tunnel Center dP	Pro. Rate 1	Pro. Rate 2	Scale Reading	Weight Change	Firebox Top	Firebox Bottom	Firebox Back	Firebox Left	Firebox Right	Avg. Stove Surface	Catalyst Exit	Stack	Filter 1	Dryer Exit 1	Filter 2	Dryer Exit 2	Ambient	Draft ("H_2O)	CO_2 (%)	CO (%)
111	16.327	16.639	0.15	0.15	1.77	75	-1.26	1.36	70	-0.8	87	0.046	101	101	7.3	0	511	389	185	272	292	330	819	252	78	74	78	75	79	-0.032	7.77	0
112	16.474	16.789	0.15	0.15	1.75	75	-1.25	1.35	70	-0.8	87	0.046	100	101	7.3	0	513	388	186	272	293	330	827	255	78	74	78	75	79	-0.032	7.81	0.02
113	16.621	16.939	0.15	0.15	1.77	75	-1.25	1.37	71	-0.8	88	0.046	100	100	7.2	-0.1	516	388	186	272	293	331	832	255	78	74	78	75	79	-0.031	7.72	0.02
114	16.769	17.088	0.15	0.15	1.76	75	-1.25	1.37	70	-0.8	87	0.046	101	100	7.2	0	518	388	186	273	294	332	837	256	78	75	79	75	79	-0.032	7.92	0.02
115	16.916	17.238	0.15	0.15	1.75	75	-1.25	1.36	70	-0.8	87	0.046	100	101	7.1	-0.1	520	387	187	273	295	332	840	257	78	75	79	75	79	-0.033	7.71	0
116	17.063	17.388	0.15	0.15	1.74	75	-1.25	1.36	70	-0.8	87	0.046	100	101	7.1	0	523	387	188	274	295	333	842	259	78	75	79	75	79	-0.033	7.6	0
117	17.210	17.538	0.15	0.15	1.75	75	-1.24	1.37	70	-0.8	87	0.046	100	101	7.0	-0.1	525	387	188	274	296	334	842	260	78	75	79	75	79	-0.033	7.62	-0.01
118	17.358	17.688	0.15	0.15	1.75	75	-1.25	1.37	70	-0.8	87	0.046	101	101	7.0	0	527	387	189	275	296	335	843	260	78	75	79	75	79	-0.033	7.74	-0.01
119	17.505	17.837	0.15	0.15	1.75	75	-1.24	1.36	70	-0.8	87	0.046	100	100	7.0	0	528	387	189	275	297	335	843	259	78	75	79	75	79	-0.033	7.56	-0.01
120	17.653	17.988	0.15	0.15	1.75	75	-1.24	1.37	70	-0.8	86	0.046	101	101	6.9	-0.1	530	387	189	276	297	336	845	259	78	75	79	75	79	-0.033	7.7	-0.01
121	17.800	18.137	0.15	0.15	1.75	75	-1.24	1.37	70	-0.8	87	0.046	100	100	6.9	0	532	387	190	276	297	336	846	257	78	75	79	75	79	-0.033	7.78	-0.01
122	17.948	18.287	0.15	0.15	1.75	75	-1.24	1.37	70	-0.8	87	0.046	101	101	6.8	-0.1	533	386	190	277	298	337	847	257	78	75	79	76	79	-0.033	8	0
123	18.096	18.437	0.15	0.15	1.74	75	-1.24	1.36	70	-0.8	87	0.046	101	101	6.8	0	534	386	191	277	298	337	845	255	78	75	79	76	79	-0.033	7.66	0
124	18.243	18.588	0.15	0.15	1.75	76	-1.24	1.37	70	-0.8	87	0.046	100	101	6.7	-0.1	535	386	192	278	298	338	845	252	78	75	79	76	79	-0.033	7.58	-0.01
125	18.390	18.737	0.15	0.15	1.76	75	-1.25	1.38	71	-0.8	87	0.046	100	100	6.7	0	537	385	192	278	298	338	851	251	78	75	79	76	80	-0.033	7.58	-0.01
126	18.538	18.886	0.15	0.15	1.77	76	-1.24	1.36	71	-0.8	87	0.046	101	100	6.7	0	538	385	192	278	298	338	854	250	78	75	79	76	80	-0.033	7.85	-0.01
127	18.685	19.036	0.15	0.15	1.76	76	-1.24	1.36	71	-0.8	87	0.046	100	100	6.6	-0.1	540	385	193	278	298	339	856	250	78	75	79	76	80	-0.033	7.77	-0.01
128	18.833	19.187	0.15	0.15	1.77	76	-1.25	1.37	71	-0.8	87	0.046	101	101	6.6	0	542	384	193	279	298	339	856	246	78	75	79	76	80	-0.033	7.67	-0.01
129	18.980	19.336	0.15	0.15	1.77	76	-1.25	1.37	71	-0.8	87	0.046	100	100	6.6	0	543	384	193	278	297	339	855	246	78	75	79	76	80	-0.033	7.92	-0.01
130	19.128	19.486	0.15	0.15	1.77	76	-1.25	1.37	71	-0.8	87	0.046	101	100	6.5	-0.1	544	383	194	279	297	339	855	243	78	75	79	76	80	-0.032	7.9	-0.01
131	19.275	19.636	0.15	0.15	1.77	76	-1.25	1.36	71	-0.8	87	0.046	100	100	6.5	0	545	382	194	279	297	339	854	242	79	75	79	76	80	-0.033	7.64	-0.01
132	19.422	19.786	0.15	0.15	1.77	76	-1.25	1.38	71	-0.8	87	0.046	100	100	6.4	-0.1	546	382	194	279	297	340	853	241	79	75	79	76	80	-0.032	7.7	-0.01
133	19.570	19.935	0.15	0.15	1.77	76	-1.25	1.37	71	-0.8	86	0.046	101	100	6.4	0	547	381	194	279	296	339	852	241	79	75	79	76	80	-0.032	7.72	-0.01
134	19.718	20.085	0.15	0.15	1.78	76	-1.25	1.36	71	-0.8	87	0.046	101	100	6.4	0	547	380	194	279	296	339	851	241	79	75	79	76	80	-0.032	7.83	-0.01
135	19.865	20.235	0.15	0.15	1.77	76	-1.26	1.36	71	-0.8	87	0.046	100	100	6.3	-0.1	548	379	194	279	296	339	851	238	79	75	79	76	80	-0.032	7.83	-0.01
136	20.012	20.385	0.15	0.15	1.77	76	-1.25	1.37	71	-0.8	87	0.046	100	100	6.3	0	548	378	195	279	296	339	850	238	79	75	79	76	79	-0.032	7.84	-0.01
137	20.160	20.535	0.15	0.15	1.77	76	-1.25	1.36	71	-0.8	87	0.046	101	100	6.3	0	549	377	195	279	296	339	850	237	79	75	79	76	79	-0.031	7.65	-0.01
138	20.307	20.684	0.15	0.15	1.77	76	-1.26	1.35	71	-0.8	86	0.046	100	100	6.2	-0.1	549	377	195	279	295	339	851	237	79	75	79	76	79	-0.031	7.84	-0.01
139	20.454	20.835	0.15	0.15	1.78	76	-1.25	1.37	71	-0.8	87	0.046	100	101	6.2	0	549	376	195	279	295	339	851	236	79	75	79	76	79	-0.032	8.09	-0.01
140	20.602	20.984	0.15	0.15	1.78	76	-1.25	1.37	71	-0.8	87	0.046	101	100	6.2	0	549	375	195	280	295	339	851	234	79	75	79	76	79	-0.032	7.95	0
141	20.749	21.134	0.15	0.15	1.78	76	-1.25	1.36	71	-0.8	87	0.046	100	100	6.1	-0.1	549	374	196	279	295	339	851	234	79	75	79	76	79	-0.031	7.86	-0.01
142	20.896	21.284	0.15	0.15	1.78	76	-1.24	1.35	71	-0.8	88	0.046	100	100	6.1	0	549	373	196	280	294	338	852	233	79	75	79	76	79	-0.031	7.98	-0.01
143	21.044	21.434	0.15	0.15	1.78	76	-1.25	1.37	72	-0.8	87	0.046	101	100	6.0	-0.1	550	373	196	279	294	338	853	233	79	75	79	76	79	-0.031	8.12	0
144	21.191	21.583	0.15	0.15	1.78	76	-1.25	1.37	72	-0.8	87	0.046	100	99	6.0	0	550	372	196	280	294	338	854	232	79	75	79	76	79	-0.031	7.93	0
145	21.339	21.733	0.15	0.15	1.77	76	-1.26	1.36	72	-0.8	88	0.046	101	100	6.0	0	550	371	196	280	293	338	856	233	79	75	80	76	79	-0.031	8.13	0
146	21.486	21.883	0.15	0.15	1.77	76	-1.25	1.37	72	-0.8	88	0.046	100	100	5.9	-0.1	551	370	197	280	293	338	858	232	79	75	80	76	79	-0.031	8.31	0
147	21.633	22.033	0.15	0.15	1.77	76	-1.25	1.37	72	-0.8	87	0.046	100	100	5.9	0	552	370	197	280	293	338	860	234	79	75	80	76	79	-0.032	8.14	0.01

Wood Heater Test Data - ASTM E2780 / ASTM E2515

Run: 4

Manufacturer: Valley Comfort
Model: 20.2 Series
Tracking No.: 2253
Project No.: 0142WS013E
Test Date: 24-Aug-17
Beginning Clock Time: 09:40

Total Sampling Time: 454 min
Recording Interval: 1 min
Background Sample Volume: _____ cubic feet

Meter Box Y Factor: 1.003 (1) 0.997 (2) _____ (Amb)

Barometric Pressure:	Begin	Middle	End	Average
	28.58	28.62	28.59	28.60 "Hg

OMNI Equipment Numbers: 464,410,132,576,318,432,419,371,372,432,296-T55,567,413,592

PM Control Modules:
Dilution Tunnel MW(dry): 29.00 lb/lb-mole
Dilution Tunnel MW(wet): 28.78 lb/lb-mole
Dilution Tunnel H2O: 2.00 percent
Dilution Tunnel Static: -0.170 "H2O
Tunnel Area: 0.19635 ft2
Pitot Tube Cp: 0.99

Avg. Tunnel Velocity: 13.16 ft/sec.
Initial Tunnel Flow: 139.4 scfm
Average Tunnel Flow: 140.7 scfm
Post-Test Leak Check (1): 0.000 cfm @ -15 in. Hg
Post-Test Leak Check (2): 0.000 cfm @ -17 in. Hg
Average Test Piece Fuel Moisture: 22.21 Dry Basis %

Technician Signature: _____

Velocity Traverse Data

	Pt.1	Pt.2	Pt.3	Pt.4	Pt.5	Pt.6	Pt.7	Pt.8	Center	
Initial dP	0.030	0.046	0.044	0.026	0.024	0.044	0.046	0.028	0.046	"H2O
Temp:	78	78	78	78	78	78	78	78	78	°F

V_{strav} 13.08 ft/sec V_{scent} 14.68 ft/sec F_p 0.891

Elapsed Time (min)	Particulate Sampling Data: Gas Meter 1 (ft^3)	Gas Meter 2 (ft^3)	Sample Rate 1 (cfm)	Sample Rate 2 (cfm)	Orifice dH 1 ("H_2O)	Meter 1 Temp (°F)	Meter 1 Vacuum ("Hg)	Orifice dH 2 ("H_2O)	Meter 2 Temp (°F)	Meter 2 Vacuum ("Hg)	Dilution Tunnel (°F)	Dilution Tunnel Center dP	Pro. Rate 1	Pro. Rate 2	Fuel Weight (lb): Scale Reading	Weight Change	Temperature Data (°F): Firebox Top	Firebox Bottom	Firebox Back	Firebox Left	Firebox Right	Avg. Stove Surface	Catalyst Exit	Stack	Filter 1	Dryer Exit 1	Filter 2	Dryer Exit 2	Ambient	Stack Gas Data: Draft ("H_2O)	CO_2 (%)	CO (%)
148	21.781	22.182	0.15	0.15	1.77	77	-1.24	1.37	72	-0.8	88	0.046	101	100	5.8	-0.1	553	369	197	280	293	338	863	234	79	75	80	76	79	-0.031	8.31	0.02
149	21.928	22.332	0.15	0.15	1.77	77	-1.24	1.36	72	-0.8	88	0.046	100	100	5.8	0	554	368	198	280	293	339	866	236	79	75	80	76	79	-0.031	8.62	0.03
150	22.075	22.482	0.15	0.15	1.76	77	-1.25	1.37	72	-0.8	88	0.046	100	100	5.8	0	555	368	198	280	293	339	870	234	79	75	80	76	80	-0.032	8.23	0.07
151	22.223	22.632	0.15	0.15	1.77	77	-1.25	1.37	72	-0.8	88	0.046	101	100	5.7	-0.1	556	367	198	280	292	339	875	236	79	76	80	77	79	-0.032	8.58	0.14
152	22.370	22.782	0.15	0.15	1.76	77	-1.25	1.35	72	-0.8	87	0.046	100	100	5.7	0	558	366	199	280	292	339	878	236	79	76	80	77	80	-0.032	8.64	0.25
153	22.517	22.931	0.15	0.15	1.76	77	-1.25	1.35	72	-0.8	87	0.046	100	99	5.6	-0.1	559	366	199	281	292	339	879	236	77	76	78	77	80	-0.032	8.68	0.33
154	22.665	23.082	0.15	0.15	1.75	77	-1.24	1.37	72	-0.8	87	0.046	101	101	5.6	0	560	365	199	280	292	339	879	236	75	76	75	77	80	-0.032	8.52	0.42
155	22.812	23.231	0.15	0.15	1.76	77	-1.24	1.37	72	-0.8	88	0.046	100	100	5.6	0	561	365	200	280	292	340	879	234	73	76	73	77	79	-0.032	8.57	0.57
156	22.959	23.381	0.15	0.15	1.75	77	-1.24	1.36	72	-0.8	88	0.046	100	100	5.5	-0.1	562	364	200	280	292	340	878	233	72	76	72	77	80	-0.032	8.7	0.64
157	23.106	23.531	0.15	0.15	1.75	77	-1.24	1.37	72	-0.8	87	0.046	100	100	5.5	0	564	363	201	280	292	340	877	233	71	76	71	77	80	-0.032	8.37	0.77
158	23.254	23.681	0.15	0.15	1.75	77	-1.24	1.38	72	-0.8	88	0.046	101	100	5.4	-0.1	564	363	201	281	292	340	876	234	71	76	70	77	80	-0.032	8.61	0.76
159	23.401	23.830	0.15	0.15	1.75	77	-1.25	1.37	73	-0.8	88	0.046	100	99	5.4	0	565	362	202	280	292	340	875	233	70	76	69	77	80	-0.032	8.38	0.87
160	23.549	23.980	0.15	0.15	1.74	77	-1.24	1.36	73	-0.8	87	0.046	101	100	5.3	-0.1	566	362	202	280	292	340	874	232	70	76	69	77	80	-0.032	8.59	0.88
161	23.697	24.131	0.15	0.15	1.74	77	-1.25	1.36	72	-0.8	88	0.046	101	101	5.3	0	566	361	203	281	292	341	872	232	69	76	69	77	80	-0.032	8.45	0.97
162	23.845	24.281	0.15	0.15	1.74	77	-1.25	1.37	73	-0.8	88	0.046	101	100	5.2	-0.1	567	361	203	280	292	341	871	231	69	76	69	77	80	-0.032	8.3	0.99
163	23.993	24.430	0.15	0.15	1.74	77	-1.25	1.37	73	-0.8	88	0.046	101	99	5.2	0	567	360	204	280	291	340	869	231	69	76	69	77	79	-0.032	8.37	1.24
164	24.140	24.580	0.15	0.15	1.76	77	-1.24	1.36	73	-0.8	88	0.046	100	100	5.2	0	567	360	204	280	291	340	866	231	69	76	69	77	80	-0.032	8.45	1.43
165	24.288	24.731	0.15	0.15	1.74	77	-1.24	1.36	73	-0.8	88	0.046	101	101	5.1	-0.1	566	359	205	281	292	341	863	231	69	77	69	77	80	-0.032	8.27	1.66
166	24.435	24.880	0.15	0.15	1.76	77	-1.25	1.37	73	-0.8	87	0.046	100	99	5.0	-0.1	566	359	205	281	292	341	859	228	69	77	69	77	81	-0.032	7.99	1.76
167	24.583	25.030	0.15	0.15	1.77	77	-1.24	1.36	73	-0.8	87	0.046	101	100	5.0	0	566	358	206	281	292	341	854	228	69	77	69	77	79	-0.033	8.1	1.63
168	24.730	25.180	0.15	0.15	1.77	77	-1.24	1.35	73	-0.8	87	0.046	100	100	5.0	0	564	358	206	281	292	340	852	228	69	77	69	77	81	-0.032	8.14	1.5
169	24.878	25.331	0.15	0.15	1.77	77	-1.25	1.37	73	-0.8	88	0.046	101	101	4.9	-0.1	564	357	207	281	292	340	851	227	69	77	69	78	80	-0.032	8.05	1.46
170	25.025	25.480	0.15	0.15	1.77	77	-1.25	1.37	73	-0.8	88	0.046	100	99	4.9	0	563	357	207	281	293	340	851	225	69	77	69	78	81	-0.032	8.12	1.37
171	25.173	25.630	0.15	0.15	1.77	77	-1.24	1.35	73	-0.8	87	0.046	101	100	4.8	-0.1	562	356	207	281	293	340	850	225	69	77	69	78	81	-0.032	8.09	1.43
172	25.321	25.780	0.15	0.15	1.77	77	-1.25	1.36	73	-0.8	87	0.046	101	100	4.8	0	562	356	208	281	293	340	849	225	69	77	69	78	80	-0.032	8.11	1.5
173	25.468	25.930	0.15	0.15	1.76	77	-1.25	1.37	73	-0.8	88	0.046	100	100	4.8	0	561	355	208	282	294	340	849	225	69	77	69	78	79	-0.032	8.11	1.48
174	25.616	26.079	0.15	0.15	1.76	77	-1.25	1.37	73	-0.8	88	0.046	101	99	4.7	-0.1	560	354	209	282	294	340	848	225	69	77	69	78	79	-0.032	8.15	1.52
175	25.763	26.229	0.15	0.15	1.77	78	-1.24	1.35	73	-0.8	88	0.046	100	100	4.7	0	560	354	209	282	294	340	847	225	69	77	69	78	81	-0.031	8.2	1.56
176	25.911	26.379	0.15	0.15	1.77	78	-1.25	1.37	73	-0.8	88	0.046	100	100	4.6	-0.1	559	353	209	282	295	340	846	224	69	77	70	78	80	-0.032	8.12	1.5
177	26.058	26.529	0.15	0.15	1.77	78	-1.25	1.37	73	-0.8	88	0.046	100	100	4.6	0	558	353	210	282	295	340	845	223	69	77	70	78	80	-0.031	8.01	1.44
178	26.205	26.679	0.15	0.15	1.77	78	-1.24	1.36	73	-0.8	88	0.046	100	100	4.5	-0.1	558	353	210	282	295	340	845	223	69	77	70	78	81	-0.031	8	1.52
179	26.353	26.829	0.15	0.15	1.77	78	-1.24	1.35	73	-0.8	88	0.046	100	100	4.5	0	557	352	211	282	295	339	843	222	70	78	70	78	80	-0.031	7.75	1.34
180	26.500	26.980	0.15	0.15	1.77	78	-1.25	1.37	73	-0.8	88	0.046	100	101	4.5	0	556	352	211	283	295	339	843	222	70	78	70	78	80	-0.031	8.2	1.35
181	26.648	27.128	0.15	0.15	1.77	78	-1.24	1.37	73	-0.8	88	0.046	100	99	4.4	-0.1	556	351	212	283	295	339	842	220	70	78	70	78	80	-0.031	8.16	1.32
182	26.796	27.278	0.15	0.15	1.77	78	-1.24	1.36	73	-0.8	88	0.046	100	100	4.4	0	555	351	213	283	296	340	841	222	70	78	70	78	81	-0.031	8.1	1.35
183	26.943	27.428	0.15	0.15	1.77	78	-1.24	1.36	73	-0.8	87	0.046	100	100	4.3	-0.1	554	350	213	283	296	339	841	220	70	78	70	78	81	-0.031	8.12	1.31
184	27.091	27.579	0.15	0.15	1.77	78	-1.25	1.37	73	-0.8	88	0.046	100	101	4.3	0	553	350	213	283	296	339	840	219	70	78	71	78	81	-0.031	7.96	1.28

Wood Heater Test Data - ASTM E2780 / ASTM E2515

Run: 4

Manufacturer: Valley Comfort
Model: 20.2 Series
Tracking No.: 2253
Project No.: 0142WS013E
Test Date: 24-Aug-17
Beginning Clock Time: 09:40

Total Sampling Time: 454 min
Recording Interval: 1 min
Background Sample Volume: _____ cubic feet

Meter Box Y Factor: 1.003 (1) 0.997 (2) _____ (Amb)

Barometric Pressure:	Begin	Middle	End	Average
	28.58	28.62	28.59	28.60 "Hg

OMNI Equipment Numbers: 464,410,132,576,318,432,419,371,372,432,296-T55,567,413,592

PM Control Modules:
Dilution Tunnel MW(dry): 29.00 lb/lb-mole
Dilution Tunnel MW(wet): 28.78 lb/lb-mole
Dilution Tunnel H2O: 2.00 percent
Dilution Tunnel Static: -0.170 "H2O
Tunnel Area: 0.19635 ft2
Pitot Tube Cp: 0.99

Avg. Tunnel Velocity: 13.16 ft/sec.
Initial Tunnel Flow: 139.4 scfm
Average Tunnel Flow: 140.7 scfm
Post-Test Leak Check (1): 0.000 cfm @ -15 in. Hg
Post-Test Leak Check (2): 0.000 cfm @ -17 in. Hg
Average Test Piece Fuel Moisture: 22.21 Dry Basis %

Technician Signature: _____

Velocity Traverse Data

	Pt.1	Pt.2	Pt.3	Pt.4	Pt.5	Pt.6	Pt.7	Pt.8	Center	
Initial dP	0.030	0.046	0.044	0.026	0.024	0.044	0.046	0.028	0.046	"H2O
Temp:	78	78	78	78	78	78	78	78	78	°F

V_{strav} 13.08 ft/sec V_{scent} 14.68 ft/sec F_p 0.891

	Particulate Sampling Data														Fuel Weight (lb)		Temperature Data (°F)													Stack Gas Data		
Elapsed Time (min)	Gas Meter 1 (ft^3)	Gas Meter 2 (ft^3)	Sample Rate 1 (cfm)	Sample Rate 2 (cfm)	Orifice dH 1 ("H_2O)	Meter 1 Temp (°F)	Meter 1 Vacuum ("Hg)	Orifice dH 2 ("H_2O)	Meter 2 Temp (°F)	Meter 2 Vacuum ("Hg)	Dilution Tunnel (°F)	Dilution Tunnel Center dP	Pro. Rate 1	Pro. Rate 2	Scale Reading	Weight Change	Firebox Top	Firebox Bottom	Firebox Back	Firebox Left	Firebox Right	Avg. Stove Surface	Catalyst Exit	Stack	Filter 1	Dryer Exit 1	Filter 2	Dryer Exit 2	Ambient	Draft ("H_2O)	CO_2 (%)	CO (%)
185	27.238	27.728	0.15	0.15	1.76	78	-1.25	1.37	73	-0.8	87	0.046	100	99	4.3	0	553	349	214	283	296	339	839	218	70	78	71	78	80	-0.031	8.05	1.32
186	27.385	27.878	0.15	0.15	1.77	78	-1.24	1.36	73	-0.8	87	0.046	100	100	4.3	0	552	349	215	283	296	339	837	218	70	78	71	79	80	-0.031	8.05	1.37
187	27.533	28.028	0.15	0.15	1.76	78	-1.25	1.37	73	-0.8	85	0.046	100	100	4.2	-0.1	551	348	216	284	297	339	834	217	70	78	71	79	79	-0.031	7.96	1.35
188	27.681	28.178	0.15	0.15	1.76	78	-1.25	1.37	73	-0.8	84	0.046	100	100	4.2	0	550	348	216	283	297	339	833	218	70	78	71	79	80	-0.031	7.92	1.3
189	27.828	28.328	0.15	0.15	1.75	78	-1.25	1.36	73	-0.8	85	0.046	99	100	4.1	-0.1	549	348	216	283	297	339	832	215	71	78	71	79	79	-0.031	7.9	1.27
190	27.975	28.478	0.15	0.15	1.75	78	-1.24	1.35	73	-0.8	84	0.046	99	100	4.1	0	548	347	217	283	297	338	830	215	71	78	71	79	79	-0.031	8	1.37
191	28.123	28.629	0.15	0.15	1.75	78	-1.25	1.37	73	-0.8	83	0.046	100	100	4.0	-0.1	547	347	217	283	297	338	828	211	71	78	71	79	79	-0.031	8.14	1.23
192	28.271	28.778	0.15	0.15	1.74	78	-1.24	1.37	73	-0.8	84	0.046	100	99	4.0	0	547	346	218	283	297	338	827	211	71	78	71	79	78	-0.030	8.1	1.15
193	28.419	28.926	0.15	0.15	1.75	78	-1.24	1.36	73	-0.8	83	0.046	100	100	4.0	0	545	346	218	283	297	338	824	210	71	79	72	79	79	-0.030	8.11	1.09
194	28.567	29.078	0.15	0.15	1.75	78	-1.24	1.36	73	-0.8	83	0.046	100	100	3.9	-0.1	544	346	219	283	298	338	823	209	71	79	72	79	79	-0.030	8.22	1.08
195	28.716	29.228	0.15	0.15	1.75	78	-1.24	1.38	73	-0.8	83	0.046	101	100	3.9	0	543	345	219	283	298	338	821	206	71	79	72	79	80	-0.030	8.15	0.94
196	28.863	29.378	0.15	0.15	1.77	78	-1.25	1.37	73	-0.8	83	0.046	99	100	3.9	0	541	345	220	283	298	337	819	205	71	79	72	79	79	-0.029	8.12	0.88
197	29.011	29.528	0.15	0.15	1.76	78	-1.24	1.36	73	-0.8	83	0.046	100	100	3.8	-0.1	540	344	221	283	298	337	817	204	71	79	72	79	79	-0.029	8.24	0.82
198	29.159	29.680	0.15	0.15	1.77	78	-1.24	1.38	73	-0.8	83	0.046	100	101	3.8	0	539	344	221	282	298	337	815	204	71	79	72	79	78	-0.029	8.43	0.79
199	29.307	29.829	0.15	0.15	1.77	78	-1.25	1.37	73	-0.8	83	0.046	100	99	3.8	0	538	344	222	282	298	337	813	203	71	79	72	79	79	-0.029	8.34	0.69
200	29.455	29.979	0.15	0.15	1.77	78	-1.24	1.36	73	-0.8	83	0.046	100	100	3.8	0	536	343	222	282	298	336	811	203	71	79	72	79	79	-0.029	8.31	0.69
201	29.603	30.129	0.15	0.15	1.77	78	-1.24	1.37	73	-0.8	83	0.046	100	100	3.7	-0.1	536	343	223	282	298	336	809	203	71	79	72	79	79	-0.029	8.51	0.65
202	29.751	30.280	0.15	0.15	1.77	78	-1.24	1.38	73	-0.8	83	0.046	100	100	3.7	0	535	343	224	283	299	337	808	201	71	79	72	79	79	-0.029	8.28	0.64
203	29.899	30.429	0.15	0.15	1.78	78	-1.24	1.37	73	-0.8	82	0.046	100	99	3.7	0	533	342	224	283	299	336	806	201	71	79	72	79	78	-0.029	8.57	0.62
204	30.046	30.579	0.15	0.15	1.78	78	-1.25	1.36	73	-0.8	82	0.046	99	100	3.6	-0.1	532	342	225	283	299	336	804	201	71	79	72	79	78	-0.029	8.38	0.59
205	30.194	30.730	0.15	0.15	1.78	78	-1.24	1.37	73	-0.8	83	0.046	100	100	3.6	0	531	341	225	283	299	336	803	201	71	79	72	79	79	-0.029	8.78	0.61
206	30.342	30.880	0.15	0.15	1.78	78	-1.24	1.37	73	-0.8	82	0.046	100	100	3.6	0	529	341	225	283	299	335	802	200	71	79	72	79	79	-0.029	8.5	0.61
207	30.490	31.030	0.15	0.15	1.78	78	-1.25	1.36	73	-0.8	83	0.046	100	100	3.6	0	529	341	226	283	300	336	800	200	71	78	72	79	79	-0.028	8.61	0.62
208	30.638	31.180	0.15	0.15	1.77	78	-1.24	1.36	73	-0.8	82	0.046	100	100	3.5	-0.1	528	340	227	283	300	336	799	199	71	77	72	79	79	-0.029	8.37	0.62
209	30.786	31.331	0.15	0.15	1.77	78	-1.25	1.38	73	-0.8	82	0.046	100	100	3.5	0	527	340	228	283	300	336	798	199	71	77	72	79	79	-0.029	8.33	0.64
210	30.933	31.480	0.15	0.15	1.76	78	-1.25	1.37	73	-0.8	83	0.046	99	99	3.5	0	525	339	228	283	300	335	797	199	71	76	72	78	79	-0.029	8.32	0.73
211	31.081	31.630	0.15	0.15	1.77	78	-1.25	1.37	73	-0.8	83	0.046	100	100	3.4	-0.1	525	339	228	283	300	335	795	197	71	76	72	78	78	-0.028	8.57	0.86
212	31.229	31.781	0.15	0.15	1.76	78	-1.25	1.37	73	-0.8	83	0.046	100	100	3.4	0	524	339	228	283	301	335	793	199	71	75	72	78	79	-0.028	8.21	0.95
213	31.377	31.931	0.15	0.15	1.75	78	-1.25	1.38	73	-0.8	82	0.046	100	100	3.4	0	522	338	229	283	301	335	791	196	71	75	72	78	79	-0.028	8.26	0.99
214	31.525	32.081	0.15	0.15	1.75	78	-1.24	1.36	73	-0.8	82	0.046	100	100	3.4	0	521	338	230	283	301	335	789	196	71	74	72	78	78	-0.029	8.36	1.06
215	31.673	32.231	0.15	0.15	1.75	78	-1.24	1.36	73	-0.8	82	0.046	100	100	3.3	-0.1	520	337	230	282	301	334	788	196	71	74	72	77	78	-0.028	7.98	1.16
216	31.821	32.382	0.15	0.15	1.75	78	-1.25	1.38	73	-0.8	83	0.046	100	100	3.3	0	519	337	231	282	301	334	785	195	71	74	72	77	78	-0.029	8.21	1.23
217	31.969	32.532	0.15	0.15	1.76	78	-1.25	1.37	73	-0.8	82	0.046	100	100	3.3	0	517	336	231	282	301	333	783	195	71	73	72	77	78	-0.028	8.1	1.34
218	32.117	32.682	0.15	0.15	1.75	78	-1.25	1.36	73	-0.8	82	0.046	100	100	3.2	-0.1	516	336	231	282	301	333	781	195	71	73	72	77	78	-0.028	8.1	1.39
219	32.265	32.833	0.15	0.15	1.77	78	-1.25	1.37	73	-0.8	82	0.046	100	100	3.2	0	515	335	232	281	301	333	778	194	71	73	72	77	78	-0.028	8.21	1.46
220	32.413	32.983	0.15	0.15	1.78	78	-1.24	1.38	73	-0.8	83	0.046	100	100	3.2	0	514	335	232	281	301	333	777	194	71	72	72	76	78	-0.028	8.16	1.44
221	32.561	33.133	0.15	0.15	1.77	78	-1.25	1.36	73	-0.8	82	0.046	100	100	3.1	-0.1	513	334	232	281	301	332	776	194	71	72	72	76	78	-0.028	8.23	1.38

Wood Heater Test Data - ASTM E2780 / ASTM E2515

Run: 4

Manufacturer: Valley Comfort
Model: 20.2 Series
Tracking No.: 2253
Project No.: 0142WS013E
Test Date: 24-Aug-17
Beginning Clock Time: 09:40

Total Sampling Time: 454 min
Recording Interval: 1 min
Background Sample Volume: _____ cubic feet

Meter Box Y Factor: 1.003 (1) 0.997 (2) _____ (Amb)

Barometric Pressure:	Begin	Middle	End	Average
	28.58	28.62	28.59	28.60 "Hg

OMNI Equipment Numbers: 464,410,132,576,318,432,419,371,372,432,296-T55,567,413,592

PM Control Modules:
Dilution Tunnel MW(dry): 29.00 lb/lb-mole
Dilution Tunnel MW(wet): 28.78 lb/lb-mole
Dilution Tunnel H2O: 2.00 percent
Dilution Tunnel Static: -0.170 "H2O
Tunnel Area: 0.19635 ft2
Pitot Tube Cp: 0.99

Avg. Tunnel Velocity: 13.16 ft/sec.
Initial Tunnel Flow: 139.4 scfm
Average Tunnel Flow: 140.7 scfm
Post-Test Leak Check (1): 0.000 cfm @ -15 in. Hg
Post-Test Leak Check (2): 0.000 cfm @ -17 in. Hg
Average Test Piece Fuel Moisture: 22.21 Dry Basis %

Technician Signature: _____

Velocity Traverse Data

	Pt.1	Pt.2	Pt.3	Pt.4	Pt.5	Pt.6	Pt.7	Pt.8	Center	
Initial dP	0.030	0.046	0.044	0.026	0.024	0.044	0.046	0.028	0.046	"H2O
Temp:	78	78	78	78	78	78	78	78	78	°F

V_{strav} 13.08 ft/sec V_{scent} 14.68 ft/sec F_p 0.891

	Particulate Sampling Data														Fuel Weight (lb)		Temperature Data (°F)													Stack Gas Data		
Elapsed Time (min)	Gas Meter 1 (ft^3)	Gas Meter 2 (ft^3)	Sample Rate 1 (cfm)	Sample Rate 2 (cfm)	Orifice dH 1 ("H_2O)	Meter 1 Temp (°F)	Meter 1 Vacuum ("Hg)	Orifice dH 2 ("H_2O)	Meter 2 Temp (°F)	Meter 2 Vacuum ("Hg)	Dilution Tunnel (°F)	Dilution Tunnel Center dP	Pro. Rate 1	Pro. Rate 2	Scale Reading	Weight Change	Firebox Top	Firebox Bottom	Firebox Back	Firebox Left	Firebox Right	Avg. Stove Surface	Catalyst Exit	Stack	Filter 1	Dryer Exit 1	Filter 2	Dryer Exit 2	Ambient	Draft ("H_2O)	CO_2 (%)	CO (%)
222	32.709	33.283	0.15	0.15	1.77	78	-1.25	1.36	73	-0.8	82	0.046	100	100	3.1	0	512	334	233	281	300	332	776	194	71	72	72	76	78	-0.028	8.17	1.28
223	32.857	33.434	0.15	0.15	1.77	78	-1.25	1.38	73	-0.8	82	0.046	100	100	3.1	0	511	333	233	281	300	332	775	192	71	72	72	76	78	-0.028	8.15	1.25
224	33.005	33.583	0.15	0.15	1.77	78	-1.25	1.37	73	-0.8	82	0.046	100	99	3.1	0	510	333	234	281	301	332	773	192	71	72	72	75	78	-0.028	8.32	1.23
225	33.153	33.734	0.15	0.15	1.76	78	-1.25	1.37	72	-0.8	82	0.046	100	100	3.0	-0.1	509	333	234	280	301	331	772	191	71	71	72	75	79	-0.027	8.33	1.07
226	33.300	33.884	0.15	0.15	1.78	78	-1.25	1.37	72	-0.8	82	0.046	99	100	3.0	0	508	332	234	280	301	331	771	190	71	71	72	75	78	-0.027	8.45	0.95
227	33.448	34.034	0.15	0.15	1.78	78	-1.25	1.38	72	-0.8	82	0.046	100	100	3.0	0	507	332	235	280	300	331	769	189	71	71	72	75	78	-0.027	8.44	0.8
228	33.596	34.184	0.15	0.15	1.78	78	-1.25	1.36	72	-0.8	82	0.046	100	100	3.0	0	506	331	235	280	300	330	768	187	71	71	72	74	79	-0.027	8.71	0.64
229	33.744	34.334	0.15	0.15	1.78	78	-1.25	1.36	72	-0.8	83	0.046	100	100	3.0	0	504	330	235	279	300	330	768	186	71	71	72	74	79	-0.026	8.52	0.45
230	33.892	34.486	0.15	0.15	1.77	78	-1.25	1.38	72	-0.8	82	0.046	100	101	2.9	-0.1	504	330	235	279	299	329	767	186	71	71	72	74	75	-0.026	8.6	0.38
231	34.039	34.635	0.15	0.15	1.77	78	-1.24	1.38	72	-0.8	82	0.046	99	99	2.9	0	502	329	235	279	299	329	766	186	71	70	72	74	75	-0.027	8.48	0.26
232	34.187	34.785	0.15	0.15	1.77	78	-1.25	1.37	72	-0.8	82	0.046	100	100	2.9	0	502	329	236	279	298	329	764	185	71	70	72	74	75	-0.026	8.63	0.21
233	34.335	34.936	0.15	0.15	1.77	78	-1.24	1.37	73	-0.8	83	0.046	100	100	2.9	0	500	328	236	278	298	328	761	183	71	70	72	73	75	-0.026	8.33	0.11
234	34.483	35.086	0.15	0.15	1.76	78	-1.25	1.38	73	-0.8	82	0.046	100	100	2.8	-0.1	498	328	236	278	298	328	758	182	71	70	72	73	75	-0.026	8.57	0.07
235	34.630	35.236	0.15	0.15	1.77	78	-1.25	1.37	73	-0.8	83	0.046	99	100	2.8	0	497	327	237	277	297	327	754	182	71	70	72	73	75	-0.026	8.44	0.03
236	34.778	35.387	0.15	0.15	1.75	78	-1.24	1.36	73	-0.8	82	0.046	100	100	2.8	0	495	326	237	277	297	326	748	181	71	70	72	73	76	-0.025	8.38	0.01
237	34.926	35.538	0.15	0.15	1.75	78	-1.25	1.37	73	-0.8	82	0.046	100	100	2.8	0	493	326	237	277	296	326	742	180	71	70	72	73	76	-0.025	8.46	0
238	35.073	35.687	0.15	0.15	1.75	78	-1.24	1.38	73	-0.8	82	0.046	99	99	2.8	0	490	325	237	276	296	325	735	178	71	70	72	73	76	-0.025	8.05	0
239	35.222	35.838	0.15	0.15	1.74	78	-1.24	1.37	73	-0.8	82	0.046	101	100	2.8	0	488	325	237	276	295	324	728	177	71	70	72	72	76	-0.025	8	0
240	35.370	35.989	0.15	0.15	1.74	78	-1.25	1.38	73	-0.8	82	0.046	100	100	2.8	0	485	324	237	275	295	323	721	176	71	70	73	72	76	-0.025	8.14	0
241	35.518	36.139	0.15	0.15	1.76	78	-1.25	1.39	73	-0.8	82	0.046	100	100	2.8	0	482	324	236	275	294	322	714	176	71	70	72	72	76	-0.024	8.05	0
242	35.666	36.289	0.15	0.15	1.75	78	-1.25	1.37	73	-0.8	82	0.046	100	100	2.7	-0.1	479	323	237	274	293	321	707	175	71	69	73	72	76	-0.025	7.84	0
243	35.814	36.440	0.15	0.15	1.77	78	-1.25	1.36	73	-0.8	83	0.046	100	100	2.7	0	476	322	236	274	293	320	701	173	71	69	72	72	76	-0.025	7.85	0
244	35.962	36.591	0.15	0.15	1.77	78	-1.25	1.38	73	-0.8	82	0.046	100	100	2.7	0	473	322	236	274	292	319	695	175	71	69	73	72	76	-0.024	7.72	0
245	36.109	36.741	0.15	0.15	1.77	78	-1.25	1.38	73	-0.8	82	0.046	99	100	2.7	0	470	321	236	272	291	318	689	173	71	69	73	71	76	-0.024	7.6	0
246	36.257	36.892	0.15	0.15	1.78	78	-1.25	1.36	73	-0.8	82	0.046	100	100	2.7	0	467	320	236	272	290	317	683	172	71	69	73	71	77	-0.023	7.43	0
247	36.406	37.043	0.15	0.15	1.77	78	-1.25	1.38	74	-0.8	82	0.046	101	100	2.7	0	464	320	235	271	289	316	678	172	71	69	73	71	77	-0.024	7.46	0
248	36.553	37.193	0.15	0.15	1.78	78	-1.25	1.38	74	-0.8	82	0.046	99	99	2.7	0	461	319	235	271	289	315	672	172	71	69	73	71	77	-0.023	7.38	0
249	36.701	37.343	0.15	0.15	1.76	78	-1.24	1.37	74	-0.8	82	0.046	100	99	2.7	0	457	319	235	270	288	314	668	171	71	68	73	71	77	-0.023	7.45	0
250	36.849	37.494	0.15	0.15	1.78	78	-1.25	1.37	74	-0.8	82	0.046	100	100	2.7	0	454	318	234	269	287	312	664	171	71	68	73	71	77	-0.023	7.56	0
251	36.996	37.644	0.15	0.15	1.78	78	-1.25	1.38	74	-0.8	82	0.046	99	99	2.7	0	451	317	234	269	286	311	660	171	71	68	73	70	77	-0.023	7.35	0
252	37.144	37.795	0.15	0.15	1.78	78	-1.24	1.36	74	-0.8	82	0.046	100	100	2.6	-0.1	448	317	234	268	285	310	658	171	71	68	73	70	77	-0.023	7.49	0
253	37.292	37.945	0.15	0.15	1.78	78	-1.24	1.37	74	-0.8	82	0.046	100	99	2.6	0	445	316	233	268	285	309	657	172	71	68	73	70	77	-0.023	7.6	0
254	37.440	38.097	0.15	0.15	1.77	78	-1.25	1.37	74	-0.8	82	0.046	100	101	2.6	0	443	316	233	267	284	309	659	173	71	68	73	70	77	-0.023	7.85	0
255	37.588	38.246	0.15	0.15	1.77	79	-1.25	1.38	74	-0.8	82	0.046	100	99	2.6	0	441	315	232	266	284	308	661	175	71	68	73	70	77	-0.023	7.85	0
256	37.735	38.397	0.15	0.15	1.77	79	-1.25	1.36	74	-0.8	82	0.046	99	100	2.6	0	439	315	232	266	283	307	663	173	71	68	73	70	77	-0.023	8.07	0
257	37.883	38.548	0.15	0.15	1.77	79	-1.25	1.38	74	-0.8	82	0.046	100	100	2.6	0	438	314	232	265	283	306	664	173	71	68	73	70	77	-0.023	8.02	0
258	38.031	38.698	0.15	0.15	1.76	79	-1.25	1.38	74	-0.8	82	0.046	100	99	2.6	0	436	314	232	265	283	306	664	175	71	67	73	69	77	-0.023	8.21	0

Wood Heater Test Data - ASTM E2780 / ASTM E2515

Run: 4

Manufacturer: Valley Comfort
Model: 20.2 Series
Tracking No.: 2253
Project No.: 0142WS013E
Test Date: 24-Aug-17
Beginning Clock Time: 09:40

Total Sampling Time: 454 min
Recording Interval: 1 min
Background Sample Volume: _____ cubic feet

Meter Box Y Factor: 1.003 (1) 0.997 (2) _____ (Amb)

Barometric Pressure:	Begin	Middle	End	Average
	28.58	28.62	28.59	28.60 "Hg

OMNI Equipment Numbers: 464,410,132,576,318,432,419,371,372,432,296-T55,567,413,592

PM Control Modules:
Dilution Tunnel MW(dry): 29.00 lb/lb-mole
Dilution Tunnel MW(wet): 28.78 lb/lb-mole
Dilution Tunnel H2O: 2.00 percent
Dilution Tunnel Static: -0.170 "H2O
Tunnel Area: 0.19635 ft2
Pitot Tube Cp: 0.99

Avg. Tunnel Velocity: 13.16 ft/sec.
Initial Tunnel Flow: 139.4 scfm
Average Tunnel Flow: 140.7 scfm
Post-Test Leak Check (1): 0.000 cfm @ -15 in. Hg
Post-Test Leak Check (2): 0.000 cfm @ -17 in. Hg
Average Test Piece Fuel Moisture: 22.21 Dry Basis %

Technician Signature: _____

Velocity Traverse Data

	Pt.1	Pt.2	Pt.3	Pt.4	Pt.5	Pt.6	Pt.7	Pt.8	Center	
Initial dP	0.030	0.046	0.044	0.026	0.024	0.044	0.046	0.028	0.046	"H2O
Temp:	78	78	78	78	78	78	78	78	78	°F

V_{strav} 13.08 ft/sec V_{scent} 14.68 ft/sec F_p 0.891

	Particulate Sampling Data														Fuel Weight (lb)		Temperature Data (°F)													Stack Gas Data		
Elapsed Time (min)	Gas Meter 1 (ft^3)	Gas Meter 2 (ft^3)	Sample Rate 1 (cfm)	Sample Rate 2 (cfm)	Orifice dH 1 ("H_2O)	Meter 1 Temp (°F)	Meter 1 Vacuum ("Hg)	Orifice dH 2 ("H_2O)	Meter 2 Temp (°F)	Meter 2 Vacuum ("Hg)	Dilution Tunnel (°F)	Dilution Tunnel Center dP	Pro. Rate 1	Pro. Rate 2	Scale Reading	Weight Change	Firebox Top	Firebox Bottom	Firebox Back	Firebox Left	Firebox Right	Avg. Stove Surface	Catalyst Exit	Stack	Filter 1	Dryer Exit 1	Filter 2	Dryer Exit 2	Ambient	Draft ("H_2O)	CO_2 (%)	CO (%)
259	38.178	38.848	0.15	0.15	1.77	79	-1.25	1.37	74	-0.8	82	0.046	99	99	2.6	0	435	313	231	265	282	305	665	175	71	67	73	69	77	-0.023	8.19	0
260	38.326	38.999	0.15	0.15	1.75	79	-1.25	1.36	74	-0.8	83	0.046	100	100	2.6	0	434	313	231	264	282	305	665	176	71	67	73	69	77	-0.023	8.12	-0.01
261	38.474	39.150	0.15	0.15	1.75	79	-1.24	1.38	74	-0.8	82	0.046	100	100	2.5	-0.1	432	312	231	264	282	304	666	176	71	67	73	69	77	-0.023	8.28	0
262	38.622	39.300	0.15	0.15	1.75	79	-1.25	1.38	74	-0.8	82	0.046	100	99	2.5	0	432	312	230	264	282	304	667	177	71	67	73	69	77	-0.023	8.05	-0.01
263	38.770	39.450	0.15	0.15	1.74	79	-1.25	1.36	74	-0.8	82	0.046	100	99	2.5	0	431	311	230	263	282	303	668	177	71	67	73	69	77	-0.023	8.39	-0.01
264	38.918	39.602	0.15	0.15	1.75	78	-1.25	1.38	74	-0.8	82	0.046	100	101	2.5	0	430	311	230	263	281	303	669	177	71	67	73	69	77	-0.023	8.26	-0.01
265	39.066	39.751	0.15	0.15	1.76	79	-1.25	1.38	74	-0.8	82	0.046	100	99	2.5	0	429	311	230	263	281	303	670	178	71	67	73	69	77	-0.023	8.36	-0.01
266	39.214	39.902	0.15	0.15	1.75	79	-1.24	1.37	74	-0.8	82	0.046	100	100	2.5	0	429	310	230	262	281	302	673	178	71	67	73	69	77	-0.024	8.47	-0.01
267	39.362	40.053	0.15	0.15	1.77	79	-1.25	1.37	74	-0.8	82	0.046	100	100	2.5	0	429	310	230	262	281	302	675	180	71	67	73	68	77	-0.023	8.65	-0.01
268	39.510	40.203	0.15	0.15	1.77	78	-1.25	1.38	74	-0.8	82	0.046	100	99	2.5	0	429	310	230	262	282	303	678	182	71	67	73	68	77	-0.024	8.63	-0.01
269	39.658	40.353	0.15	0.15	1.77	78	-1.26	1.37	74	-0.8	83	0.046	100	99	2.4	-0.1	429	309	229	261	281	302	681	182	71	67	73	68	77	-0.024	8.62	-0.01
270	39.806	40.504	0.15	0.15	1.77	79	-1.25	1.37	74	-0.8	82	0.046	100	100	2.4	0	429	309	229	262	281	302	683	182	71	67	73	68	77	-0.023	9.42	-0.01
271	39.954	40.655	0.15	0.15	1.77	79	-1.25	1.39	74	-0.8	83	0.046	100	100	2.4	0	430	309	229	262	281	302	689	182	71	67	73	68	77	-0.023	9.55	-0.01
272	40.102	40.805	0.15	0.15	1.78	79	-1.24	1.37	74	-0.8	82	0.046	100	99	2.4	0	431	309	229	262	281	302	694	183	71	67	73	68	77	-0.023	9.6	-0.01
273	40.249	40.955	0.15	0.15	1.76	79	-1.25	1.37	74	-0.8	82	0.046	99	99	2.4	0	431	308	229	262	281	302	698	185	71	66	73	68	77	-0.023	9.54	-0.01
274	40.397	41.107	0.15	0.15	1.78	79	-1.25	1.38	74	-0.8	82	0.046	100	101	2.4	0	432	308	229	262	282	303	701	185	71	66	73	68	77	-0.023	9.38	-0.01
275	40.545	41.257	0.15	0.15	1.78	79	-1.25	1.38	74	-0.8	82	0.046	100	99	2.4	0	433	308	229	262	282	303	704	185	71	66	73	68	77	-0.024	9.43	-0.01
276	40.692	41.407	0.15	0.15	1.77	79	-1.25	1.37	74	-0.8	82	0.046	99	99	2.3	-0.1	434	308	230	262	282	303	706	185	71	66	73	68	77	-0.024	9.42	-0.01
277	40.840	41.558	0.15	0.15	1.78	79	-1.25	1.38	74	-0.8	83	0.046	100	100	2.3	0	435	308	230	262	282	303	708	185	71	66	73	68	77	-0.024	9.58	-0.01
278	40.988	41.708	0.15	0.15	1.77	79	-1.25	1.38	74	-0.8	83	0.046	100	99	2.3	0	436	308	230	262	282	304	709	185	71	66	73	68	77	-0.024	9.42	-0.01
279	41.136	41.859	0.15	0.15	1.77	79	-1.25	1.38	74	-0.8	83	0.046	100	100	2.3	0	436	308	230	263	282	304	711	185	71	66	73	68	77	-0.024	9.46	-0.01
280	41.284	42.009	0.15	0.15	1.77	79	-1.24	1.36	74	-0.8	83	0.046	100	99	2.3	0	437	308	230	263	282	304	713	186	71	66	73	67	77	-0.024	9.58	-0.01
281	41.432	42.160	0.15	0.15	1.77	79	-1.25	1.37	74	-0.8	83	0.046	100	100	2.3	0	439	308	231	263	282	305	715	186	71	66	73	67	77	-0.024	9.48	-0.01
282	41.579	42.310	0.15	0.15	1.76	79	-1.24	1.38	74	-0.8	83	0.046	99	99	2.2	-0.1	440	308	231	263	282	305	717	187	71	66	73	67	77	-0.024	9.44	-0.01
283	41.727	42.460	0.15	0.15	1.75	79	-1.25	1.37	74	-0.8	83	0.046	100	99	2.2	0	441	308	231	263	282	305	717	187	71	66	73	67	77	-0.024	9.28	-0.01
284	41.875	42.611	0.15	0.15	1.75	79	-1.24	1.38	74	-0.8	83	0.046	100	100	2.2	0	441	308	232	263	282	305	718	189	71	66	73	67	77	-0.024	9.37	-0.01
285	42.023	42.761	0.15	0.15	1.74	79	-1.25	1.38	74	-0.8	83	0.046	100	99	2.2	0	442	308	232	264	282	306	719	187	71	66	73	67	77	-0.024	9.36	-0.01
286	42.171	42.912	0.15	0.15	1.75	79	-1.24	1.37	74	-0.8	83	0.046	100	100	2.2	0	443	308	232	264	282	306	719	190	71	66	73	67	77	-0.024	9.38	-0.01
287	42.319	43.062	0.15	0.15	1.74	79	-1.25	1.37	73	-0.8	83	0.046	100	100	2.2	0	444	308	233	265	282	306	719	189	71	66	73	67	77	-0.024	9.34	-0.01
288	42.467	43.213	0.15	0.15	1.75	79	-1.25	1.38	74	-0.8	83	0.046	100	100	2.1	-0.1	444	308	233	265	282	306	719	190	71	66	73	67	77	-0.024	9.21	-0.01
289	42.615	43.363	0.15	0.15	1.76	79	-1.25	1.38	74	-0.8	83	0.046	100	99	2.1	0	445	308	234	265	282	307	719	190	71	66	73	67	77	-0.025	9.06	-0.01
290	42.763	43.514	0.15	0.15	1.77	79	-1.25	1.36	74	-0.8	83	0.046	100	100	2.1	0	445	308	234	265	282	307	718	190	71	66	73	67	77	-0.025	9.06	-0.01
291	42.911	43.665	0.15	0.15	1.77	79	-1.25	1.38	74	-0.8	83	0.046	100	100	2.1	0	446	308	234	266	282	307	717	189	71	66	73	67	77	-0.025	8.99	-0.01
292	43.059	43.815	0.15	0.15	1.77	79	-1.24	1.38	74	-0.8	83	0.046	100	99	2.1	0	446	308	235	266	282	307	716	189	71	66	73	67	77	-0.026	8.98	-0.01
293	43.207	43.965	0.15	0.15	1.77	79	-1.25	1.37	74	-0.8	83	0.046	100	99	2.1	0	447	308	235	266	282	308	715	189	71	66	73	67	77	-0.024	8.78	-0.01
294	43.355	44.116	0.15	0.15	1.77	79	-1.25	1.37	74	-0.8	83	0.046	100	100	2.1	0	447	308	235	266	282	308	714	189	71	66	73	67	77	-0.025	8.75	-0.01
295	43.503	44.266	0.15	0.15	1.76	79	-1.25	1.38	74	-0.8	83	0.046	100	99	2.0	-0.1	447	308	236	267	282	308	713	190	71	66	73	67	77	-0.025	8.68	-0.01

Wood Heater Test Data - ASTM E2780 / ASTM E2515

Run: 4

Manufacturer: Valley Comfort
Model: 20.2 Series
Tracking No.: 2253
Project No.: 0142WS013E
Test Date: 24-Aug-17
Beginning Clock Time: 09:40

Total Sampling Time: 454 min
Recording Interval: 1 min
Background Sample Volume: _____ cubic feet

Meter Box Y Factor: 1.003 (1) 0.997 (2) _____ (Amb)

Barometric Pressure:	Begin	Middle	End	Average
	28.58	28.62	28.59	28.60 "Hg

OMNI Equipment Numbers: 464,410,132,576,318,432,419,371,372,432,296-T55,567,413,592

PM Control Modules:
Dilution Tunnel MW(dry): 29.00 lb/lb-mole
Dilution Tunnel MW(wet): 28.78 lb/lb-mole
Dilution Tunnel H2O: 2.00 percent
Dilution Tunnel Static: -0.170 "H2O
Tunnel Area: 0.19635 ft2
Pitot Tube Cp: 0.99

Avg. Tunnel Velocity: 13.16 ft/sec.
Initial Tunnel Flow: 139.4 scfm
Average Tunnel Flow: 140.7 scfm
Post-Test Leak Check (1): 0.000 cfm @ -15 in. Hg
Post-Test Leak Check (2): 0.000 cfm @ -17 in. Hg
Average Test Piece Fuel Moisture: 22.21 Dry Basis %

Technician Signature: _____

Velocity Traverse Data

	Pt.1	Pt.2	Pt.3	Pt.4	Pt.5	Pt.6	Pt.7	Pt.8	Center	
Initial dP	0.030	0.046	0.044	0.026	0.024	0.044	0.046	0.028	0.046	"H2O
Temp:	78	78	78	78	78	78	78	78	78	°F

V_{strav} 13.08 ft/sec V_{scent} 14.68 ft/sec F_p 0.891

Elapsed Time (min)	Particulate Sampling Data: Gas Meter 1 (ft^3)	Gas Meter 2 (ft^3)	Sample Rate 1 (cfm)	Sample Rate 2 (cfm)	Orifice dH 1 ("H_2O)	Meter 1 Temp (°F)	Meter 1 Vacuum ("Hg)	Orifice dH 2 ("H_2O)	Meter 2 Temp (°F)	Meter 2 Vacuum ("Hg)	Dilution Tunnel (°F)	Dilution Tunnel Center dP	Pro. Rate 1	Pro. Rate 2	Fuel Weight (lb): Scale Reading	Weight Change	Temperature Data (°F): Firebox Top	Firebox Bottom	Firebox Back	Firebox Left	Firebox Right	Avg. Stove Surface	Catalyst Exit	Stack	Filter 1	Dryer Exit 1	Filter 2	Dryer Exit 2	Ambient	Stack Gas Data: Draft ("H_2O)	CO_2 (%)	CO (%)
296	43.650	44.417	0.15	0.15	1.77	79	-1.24	1.37	74	-0.8	83	0.046	99	100	2.0	0	447	308	236	267	282	308	712	190	71	66	73	67	77	-0.025	8.71	-0.01
297	43.798	44.567	0.15	0.15	1.78	79	-1.25	1.37	74	-0.8	83	0.046	100	99	2.0	0	447	308	237	267	282	308	711	189	71	66	73	67	77	-0.025	8.71	-0.01
298	43.946	44.719	0.15	0.15	1.78	79	-1.25	1.37	74	-0.8	83	0.046	100	101	2.0	0	447	309	237	268	282	309	710	190	71	66	73	67	77	-0.025	8.66	-0.01
299	44.093	44.868	0.15	0.15	1.77	79	-1.25	1.38	74	-0.8	84	0.046	99	99	2.0	0	447	309	237	268	282	309	709	190	71	66	73	67	77	-0.025	8.55	-0.01
300	44.241	45.019	0.15	0.15	1.77	79	-1.25	1.37	74	-0.8	83	0.046	100	100	2.0	0	447	309	238	268	282	309	708	189	71	66	73	67	77	-0.025	8.5	-0.01
301	44.389	45.170	0.15	0.15	1.77	79	-1.25	1.38	74	-0.8	83	0.046	100	100	2.0	0	446	309	238	268	282	309	707	189	71	66	73	67	77	-0.025	8.56	-0.01
302	44.537	45.320	0.15	0.15	1.77	79	-1.25	1.38	74	-0.8	83	0.046	100	99	2.0	0	446	309	238	268	282	309	706	189	71	66	73	67	77	-0.025	8.56	-0.01
303	44.685	45.470	0.15	0.15	1.77	79	-1.25	1.37	74	-0.8	84	0.046	100	100	2.0	0	446	309	238	269	282	309	705	189	71	66	73	67	77	-0.025	8.47	-0.01
304	44.832	45.621	0.15	0.15	1.76	79	-1.25	1.36	74	-0.8	83	0.046	99	100	1.9	-0.1	446	309	239	269	282	309	704	190	71	66	73	67	77	-0.025	8.31	-0.01
305	44.980	45.772	0.15	0.15	1.77	79	-1.26	1.38	74	-0.8	83	0.046	100	100	1.9	0	445	309	239	269	282	309	702	190	71	66	73	67	77	-0.025	8.09	-0.01
306	45.128	45.922	0.15	0.15	1.75	79	-1.25	1.38	74	-0.8	84	0.046	100	100	1.9	0	445	309	239	268	282	309	701	189	71	66	73	67	77	-0.025	8.29	-0.01
307	45.275	46.072	0.15	0.15	1.75	79	-1.25	1.36	74	-0.8	83	0.046	99	99	1.9	0	444	310	239	269	282	309	700	189	71	67	73	67	77	-0.025	8.19	-0.01
308	45.423	46.224	0.15	0.15	1.75	79	-1.25	1.37	74	-0.8	83	0.046	100	101	1.9	0	444	310	239	269	282	309	699	189	72	67	73	67	77	-0.025	8.23	-0.01
309	45.572	46.373	0.15	0.15	1.74	79	-1.25	1.38	74	-0.8	83	0.046	100	99	1.9	0	444	310	239	269	282	309	698	189	72	67	73	67	77	-0.025	8.05	-0.01
310	45.720	46.524	0.15	0.15	1.75	79	-1.24	1.36	74	-0.8	83	0.046	100	100	1.9	0	443	310	239	269	282	309	697	189	71	67	73	67	77	-0.025	8	-0.01
311	45.868	46.675	0.15	0.15	1.76	79	-1.25	1.37	74	-0.8	83	0.046	100	100	1.8	-0.1	442	310	240	269	282	309	696	187	71	67	73	67	77	-0.025	8.02	-0.01
312	46.016	46.825	0.15	0.15	1.75	79	-1.25	1.38	74	-0.8	83	0.046	100	99	1.8	0	442	310	240	269	282	309	695	189	72	67	73	67	77	-0.025	7.9	-0.01
313	46.164	46.975	0.15	0.15	1.77	79	-1.25	1.36	74	-0.8	83	0.046	100	99	1.8	0	441	310	240	269	281	308	694	190	72	67	73	67	77	-0.025	7.98	-0.01
314	46.312	47.126	0.15	0.15	1.77	79	-1.24	1.37	74	-0.8	83	0.046	100	100	1.8	0	441	310	240	269	281	308	693	189	72	67	73	67	77	-0.025	7.96	-0.01
315	46.460	47.277	0.15	0.15	1.77	79	-1.25	1.38	74	-0.8	83	0.046	100	100	1.8	0	440	310	240	269	281	308	692	189	72	67	73	67	77	-0.025	7.97	-0.01
316	46.608	47.427	0.15	0.15	1.77	79	-1.25	1.38	74	-0.8	84	0.046	100	100	1.8	0	440	310	240	269	281	308	691	190	72	67	73	67	77	-0.025	7.88	-0.01
317	46.756	47.577	0.15	0.15	1.76	79	-1.25	1.36	74	-0.8	84	0.046	100	100	1.8	0	439	310	240	269	281	308	690	190	72	67	73	67	77	-0.026	7.84	-0.01
318	46.904	47.729	0.15	0.15	1.77	79	-1.25	1.38	74	-0.8	83	0.046	100	101	1.8	0	438	310	240	269	281	308	689	189	72	67	73	67	77	-0.025	7.77	-0.01
319	47.051	47.879	0.15	0.15	1.77	79	-1.24	1.38	74	-0.8	84	0.046	99	100	1.7	-0.1	438	310	240	269	281	308	688	189	72	67	73	67	77	-0.025	7.77	-0.01
320	47.199	48.029	0.15	0.15	1.77	79	-1.25	1.37	74	-0.8	83	0.046	100	99	1.7	0	438	310	240	269	281	308	687	189	72	67	73	67	77	-0.025	7.75	-0.01
321	47.347	48.180	0.15	0.15	1.77	79	-1.25	1.37	74	-0.8	83	0.046	100	100	1.7	0	437	310	240	269	281	307	687	190	72	67	73	67	77	-0.025	7.9	-0.01
322	47.495	48.330	0.15	0.15	1.78	79	-1.26	1.38	74	-0.8	83	0.046	100	99	1.7	0	436	310	239	268	280	307	686	189	72	67	73	67	77	-0.024	7.98	-0.01
323	47.643	48.480	0.15	0.15	1.77	79	-1.26	1.38	74	-0.8	83	0.046	100	99	1.7	0	436	310	239	268	280	307	685	187	72	67	73	67	78	-0.025	7.89	-0.01
324	47.791	48.631	0.15	0.15	1.77	79	-1.25	1.36	74	-0.8	84	0.046	100	100	1.7	0	435	310	240	268	280	307	685	187	72	67	73	67	78	-0.025	7.63	-0.01
325	47.938	48.782	0.15	0.15	1.77	79	-1.25	1.38	74	-0.8	84	0.046	99	100	1.7	0	434	310	240	268	280	306	684	187	72	67	73	67	78	-0.024	7.72	-0.01
326	48.086	48.932	0.15	0.15	1.77	79	-1.25	1.38	74	-0.8	84	0.046	100	100	1.7	0	434	309	239	267	279	306	683	186	72	67	73	67	78	-0.024	7.76	-0.01
327	48.234	49.082	0.15	0.15	1.76	79	-1.26	1.36	74	-0.8	84	0.046	100	100	1.7	0	434	309	239	268	279	306	683	187	72	67	73	67	78	-0.024	7.86	-0.01
328	48.382	49.233	0.15	0.15	1.75	79	-1.25	1.38	74	-0.8	84	0.046	100	100	1.6	-0.1	433	309	239	267	279	305	683	189	72	67	73	67	78	-0.024	7.83	-0.01
329	48.529	49.383	0.15	0.15	1.76	79	-1.25	1.38	74	-0.8	84	0.046	99	100	1.6	0	432	309	239	267	278	305	684	189	72	67	73	68	78	-0.024	7.79	-0.01
330	48.677	49.534	0.15	0.15	1.75	79	-1.25	1.36	74	-0.8	84	0.046	100	100	1.6	0	432	309	238	267	278	305	685	189	72	67	73	68	78	-0.025	7.89	-0.01
331	48.825	49.684	0.15	0.15	1.74	79	-1.24	1.37	74	-0.8	84	0.046	100	100	1.6	0	432	309	238	267	278	305	686	190	72	67	73	68	78	-0.025	7.91	-0.01
332	48.973	49.835	0.15	0.15	1.75	79	-1.24	1.38	74	-0.8	84	0.046	100	100	1.6	0	432	309	238	266	277	304	687	190	72	67	73	68	78	-0.025	7.94	-0.01

Wood Heater Test Data - ASTM E2780 / ASTM E2515

Run: 4

Manufacturer: Valley Comfort
Model: 20.2 Series
Tracking No.: 2253
Project No.: 0142WS013E
Test Date: 24-Aug-17
Beginning Clock Time: 09:40

Total Sampling Time: 454 min
Recording Interval: 1 min
Background Sample Volume: _____ cubic feet

Meter Box Y Factor: 1.003 (1) 0.997 (2) _____ (Amb)

Barometric Pressure:	Begin	Middle	End	Average
	28.58	28.62	28.59	28.60 "Hg

OMNI Equipment Numbers: 464,410,132,576,318,432,419,371,372,432,296-T55,567,413,592

PM Control Modules:
Dilution Tunnel MW(dry): 29.00 lb/lb-mole
Dilution Tunnel MW(wet): 28.78 lb/lb-mole
Dilution Tunnel H2O: 2.00 percent
Dilution Tunnel Static: -0.170 "H2O
Tunnel Area: 0.19635 ft2
Pitot Tube Cp: 0.99

Avg. Tunnel Velocity: 13.16 ft/sec.
Initial Tunnel Flow: 139.4 scfm
Average Tunnel Flow: 140.7 scfm
Post-Test Leak Check (1): 0.000 cfm @ -15 in. Hg
Post-Test Leak Check (2): 0.000 cfm @ -17 in. Hg
Average Test Piece Fuel Moisture: 22.21 Dry Basis %

Technician Signature: _____

Velocity Traverse Data

	Pt.1	Pt.2	Pt.3	Pt.4	Pt.5	Pt.6	Pt.7	Pt.8	Center	
Initial dP	0.030	0.046	0.044	0.026	0.024	0.044	0.046	0.028	0.046	"H2O
Temp:	78	78	78	78	78	78	78	78	78	°F

V_{strav} 13.08 ft/sec V_{scent} 14.68 ft/sec F_p 0.891

	Particulate Sampling Data														Fuel Weight (lb)		Temperature Data (°F)													Stack Gas Data		
Elapsed Time (min)	Gas Meter 1 (ft^3)	Gas Meter 2 (ft^3)	Sample Rate 1 (cfm)	Sample Rate 2 (cfm)	Orifice dH 1 ("H_2O)	Meter 1 Temp (°F)	Meter 1 Vacuum ("Hg)	Orifice dH 2 ("H_2O)	Meter 2 Temp (°F)	Meter 2 Vacuum ("Hg)	Dilution Tunnel (°F)	Dilution Tunnel Center dP	Pro. Rate 1	Pro. Rate 2	Scale Reading	Weight Change	Firebox Top	Firebox Bottom	Firebox Back	Firebox Left	Firebox Right	Avg. Stove Surface	Catalyst Exit	Stack	Filter 1	Dryer Exit 1	Filter 2	Dryer Exit 2	Ambient	Draft ("H_2O)	CO_2 (%)	CO (%)
333	49.122	49.985	0.15	0.15	1.75	79	-1.24	1.37	74	-0.8	84	0.046	101	100	1.6	0	432	309	237	266	277	304	690	192	72	67	73	68	77	-0.024	8.6	-0.01
334	49.270	50.136	0.15	0.15	1.76	79	-1.25	1.36	74	-0.8	84	0.046	100	100	1.6	0	432	309	237	265	276	304	696	192	72	67	73	68	78	-0.025	8.75	-0.01
335	49.418	50.288	0.15	0.15	1.77	79	-1.25	1.38	74	-0.8	84	0.046	100	101	1.5	-0.1	433	309	237	266	276	304	701	194	72	67	73	68	77	-0.025	8.56	-0.01
336	49.566	50.437	0.15	0.15	1.76	79	-1.25	1.38	74	-0.8	84	0.046	100	99	1.5	0	434	309	237	266	275	304	704	194	72	67	73	68	77	-0.025	8.6	-0.01
337	49.714	50.588	0.15	0.15	1.77	79	-1.24	1.37	74	-0.8	84	0.046	100	100	1.5	0	434	309	237	265	275	304	706	195	72	67	73	68	78	-0.025	8.48	-0.01
338	49.862	50.738	0.15	0.15	1.77	79	-1.25	1.37	74	-0.8	84	0.046	100	100	1.5	0	435	310	236	265	274	304	708	195	72	67	73	68	77	-0.025	8.26	-0.01
339	50.010	50.888	0.15	0.15	1.76	79	-1.25	1.38	74	-0.8	84	0.046	100	100	1.5	0	436	310	236	266	274	304	710	196	72	67	73	68	77	-0.026	8.42	-0.01
340	50.158	51.039	0.15	0.15	1.77	79	-1.25	1.37	74	-0.8	84	0.046	100	100	1.5	0	437	310	235	265	274	304	711	196	72	67	73	68	78	-0.026	8.34	-0.01
341	50.305	51.189	0.15	0.15	1.77	79	-1.25	1.36	74	-0.8	84	0.046	99	100	1.5	0	438	311	235	266	273	305	713	197	72	67	73	68	77	-0.026	8.31	-0.01
342	50.453	51.341	0.15	0.15	1.77	79	-1.25	1.37	74	-0.8	84	0.046	100	101	1.4	-0.1	438	311	236	265	273	305	714	197	72	67	73	68	77	-0.025	8.41	-0.01
343	50.601	51.490	0.15	0.15	1.78	79	-1.24	1.38	74	-0.8	84	0.046	100	99	1.4	0	440	311	235	266	273	305	715	199	72	67	73	68	77	-0.026	8.39	-0.01
344	50.749	51.641	0.15	0.15	1.78	79	-1.25	1.36	74	-0.8	84	0.046	100	100	1.4	0	440	312	235	265	273	305	716	200	72	67	73	68	77	-0.025	8.41	-0.01
345	50.897	51.792	0.15	0.15	1.77	79	-1.25	1.38	74	-0.8	84	0.046	100	100	1.4	0	441	312	235	266	274	306	706	201	72	67	73	68	77	-0.026	8.66	-0.01
346	51.045	51.942	0.15	0.15	1.77	79	-1.25	1.38	74	-0.8	84	0.046	100	100	1.4	0	439	313	234	266	274	305	686	201	72	67	73	68	77	-0.026	8.43	-0.01
347	51.193	52.092	0.15	0.15	1.77	79	-1.25	1.37	74	-0.8	84	0.046	100	100	1.3	-0.1	437	313	234	266	275	305	670	203	72	67	73	68	77	-0.026	8.3	-0.02
348	51.340	52.242	0.15	0.15	1.77	79	-1.25	1.36	74	-0.8	84	0.046	99	100	1.3	0	435	314	234	267	276	305	658	201	72	67	73	68	77	-0.026	8.07	-0.01
349	51.488	52.393	0.15	0.15	1.76	79	-1.24	1.38	74	-0.8	84	0.046	100	100	1.3	0	432	315	235	267	277	305	650	201	72	67	73	68	77	-0.026	8.21	-0.01
350	51.636	52.543	0.15	0.15	1.77	79	-1.25	1.38	74	-0.8	84	0.046	100	100	1.3	0	429	315	235	267	278	305	644	201	72	68	73	68	77	-0.026	8.05	-0.01
351	51.783	52.694	0.15	0.15	1.75	79	-1.25	1.36	74	-0.8	84	0.046	99	100	1.3	0	427	316	235	268	279	305	639	201	72	68	73	68	77	-0.026	7.96	-0.01
352	51.931	52.845	0.15	0.15	1.74	79	-1.24	1.37	74	-0.8	84	0.046	100	100	1.3	0	425	316	235	268	280	305	635	200	72	68	73	68	77	-0.026	7.93	-0.01
353	52.079	52.995	0.15	0.15	1.75	79	-1.24	1.38	74	-0.8	84	0.046	100	100	1.3	0	423	317	235	268	281	305	631	200	71	68	73	68	78	-0.026	7.8	-0.01
354	52.228	53.145	0.15	0.15	1.74	79	-1.24	1.36	74	-0.8	84	0.046	101	100	1.2	-0.1	421	318	236	268	282	305	629	199	72	68	73	68	78	-0.025	7.86	-0.01
355	52.376	53.295	0.15	0.15	1.75	79	-1.24	1.37	74	-0.8	84	0.046	100	100	1.2	0	419	318	235	268	283	305	626	197	71	68	73	68	78	-0.026	7.91	-0.01
356	52.524	53.446	0.15	0.15	1.76	79	-1.24	1.38	74	-0.8	84	0.046	100	100	1.2	0	417	319	236	268	284	305	625	196	72	68	73	68	78	-0.026	7.79	-0.01
357	52.672	53.596	0.15	0.15	1.75	79	-1.25	1.37	74	-0.8	84	0.046	100	100	1.2	0	415	319	236	268	285	305	623	196	72	68	73	68	78	-0.026	7.77	-0.01
358	52.820	53.747	0.15	0.15	1.77	79	-1.24	1.36	74	-0.8	85	0.046	100	100	1.2	0	414	320	236	268	285	305	623	196	71	68	73	68	78	-0.025	7.6	-0.01
359	52.968	53.898	0.15	0.15	1.77	79	-1.24	1.38	74	-0.8	85	0.046	100	100	1.2	0	412	320	236	268	286	304	622	196	72	68	73	68	78	-0.025	7.67	-0.01
360	53.116	54.047	0.15	0.15	1.77	79	-1.25	1.38	74	-0.8	85	0.046	100	99	1.2	0	411	321	237	268	286	305	623	195	72	68	73	68	78	-0.026	7.63	-0.01
361	53.264	54.198	0.15	0.15	1.77	79	-1.24	1.37	74	-0.8	85	0.046	100	100	1.1	-0.1	410	321	237	268	287	305	623	195	72	68	73	68	78	-0.025	7.5	-0.01
362	53.412	54.348	0.15	0.15	1.76	79	-1.24	1.37	74	-0.8	85	0.046	100	100	1.1	0	409	322	237	267	287	304	622	195	71	68	73	68	78	-0.026	7.54	-0.01
363	53.559	54.499	0.15	0.15	1.77	79	-1.25	1.37	74	-0.8	85	0.046	99	100	1.1	0	408	322	237	268	288	305	622	195	72	68	73	68	78	-0.025	7.56	-0.01
364	53.707	54.649	0.15	0.15	1.76	79	-1.24	1.36	74	-0.8	85	0.046	100	100	1.1	0	407	322	238	268	288	305	622	194	72	68	73	69	78	-0.025	7.55	-0.01
365	53.855	54.799	0.15	0.15	1.77	80	-1.25	1.37	74	-0.8	85	0.046	100	100	1.1	0	407	323	237	267	288	304	623	195	72	68	73	69	78	-0.025	7.59	-0.01
366	54.002	54.950	0.15	0.15	1.77	80	-1.24	1.38	74	-0.8	84	0.046	99	100	1.1	0	406	323	238	267	288	304	624	195	72	68	73	69	78	-0.026	7.56	-0.01
367	54.150	55.100	0.15	0.15	1.77	80	-1.25	1.37	74	-0.8	84	0.046	100	100	1.1	0	405	323	238	267	288	304	624	196	71	68	73	69	78	-0.026	7.5	-0.01
368	54.298	55.250	0.15	0.15	1.77	80	-1.25	1.36	74	-0.8	84	0.046	100	100	1.0	-0.1	405	324	238	267	288	304	625	195	72	68	73	69	78	-0.026	7.49	-0.01
369	54.446	55.401	0.15	0.15	1.76	80	-1.25	1.37	74	-0.8	84	0.046	100	100	1.0	0	404	324	237	266	288	304	625	195	72	68	73	69	78	-0.026	7.48	-0.01

Wood Heater Test Data - ASTM E2780 / ASTM E2515

Run: 4

Manufacturer: Valley Comfort
Model: 20.2 Series
Tracking No.: 2253
Project No.: 0142WS013E
Test Date: 24-Aug-17
Beginning Clock Time: 09:40

Total Sampling Time: 454 min
Recording Interval: 1 min
Background Sample Volume: _____ cubic feet

Meter Box Y Factor: 1.003 (1) 0.997 (2) _____ (Amb)

Barometric Pressure:	Begin	Middle	End	Average
	28.58	28.62	28.59	28.60 "Hg

OMNI Equipment Numbers: 464,410,132,576,318,432,419,371,372,432,296-T55,567,413,592

PM Control Modules:
Dilution Tunnel MW(dry): 29.00 lb/lb-mole
Dilution Tunnel MW(wet): 28.78 lb/lb-mole
Dilution Tunnel H2O: 2.00 percent
Dilution Tunnel Static: -0.170 "H2O
Tunnel Area: 0.19635 ft2
Pitot Tube Cp: 0.99

Avg. Tunnel Velocity: 13.16 ft/sec.
Initial Tunnel Flow: 139.4 scfm
Average Tunnel Flow: 140.7 scfm
Post-Test Leak Check (1): 0.000 cfm @ -15 in. Hg
Post-Test Leak Check (2): 0.000 cfm @ -17 in. Hg
Average Test Piece Fuel Moisture: 22.21 Dry Basis %

Technician Signature: _____

Velocity Traverse Data

	Pt.1	Pt.2	Pt.3	Pt.4	Pt.5	Pt.6	Pt.7	Pt.8	Center	
Initial dP	0.030	0.046	0.044	0.026	0.024	0.044	0.046	0.028	0.046	"H2O
Temp:	78	78	78	78	78	78	78	78	78	°F

V_{strav} 13.08 ft/sec V_{scent} 14.68 ft/sec F_p 0.891

	Particulate Sampling Data														Fuel Weight (lb)		Temperature Data (°F)													Stack Gas Data		
Elapsed Time (min)	Gas Meter 1 (ft^3)	Gas Meter 2 (ft^3)	Sample Rate 1 (cfm)	Sample Rate 2 (cfm)	Orifice dH 1 ("H_2O)	Meter 1 Temp (°F)	Meter 1 Vacuum ("Hg)	Orifice dH 2 ("H_2O)	Meter 2 Temp (°F)	Meter 2 Vacuum ("Hg)	Dilution Tunnel (°F)	Dilution Tunnel Center dP	Pro. Rate 1	Pro. Rate 2	Scale Reading	Weight Change	Firebox Top	Firebox Bottom	Firebox Back	Firebox Left	Firebox Right	Avg. Stove Surface	Catalyst Exit	Stack	Filter 1	Dryer Exit 1	Filter 2	Dryer Exit 2	Ambient	Draft ("H_2O)	CO_2 (%)	CO (%)
370	54.593	55.551	0.15	0.15	1.76	80	-1.25	1.38	74	-0.8	84	0.046	99	100	1.0	0	404	324	238	266	289	304	625	195	72	68	73	69	78	-0.026	7.37	-0.01
371	54.741	55.701	0.15	0.15	1.77	80	-1.24	1.36	74	-0.8	84	0.046	100	100	1.0	0	404	324	238	266	289	304	625	195	72	68	73	69	78	-0.026	7.22	-0.01
372	54.889	55.851	0.15	0.15	1.76	80	-1.25	1.36	74	-0.8	84	0.046	100	100	1.0	0	403	324	238	266	289	304	626	195	72	69	73	69	78	-0.025	7.29	-0.01
373	55.037	56.003	0.15	0.15	1.75	80	-1.24	1.37	74	-0.8	84	0.046	100	101	1.0	0	403	325	238	265	289	304	627	194	72	69	73	69	78	-0.026	7.31	-0.01
374	55.184	56.152	0.15	0.15	1.76	80	-1.24	1.38	74	-0.8	84	0.046	99	99	1.0	0	403	325	238	265	289	304	627	192	72	69	73	69	78	-0.025	7.39	-0.01
375	55.332	56.303	0.15	0.15	1.75	80	-1.25	1.36	74	-0.8	84	0.046	100	100	1.0	0	403	325	238	265	289	304	628	192	72	69	73	69	78	-0.025	7.25	-0.01
376	55.480	56.454	0.15	0.15	1.74	80	-1.25	1.38	74	-0.8	84	0.046	100	100	1.0	0	402	325	238	264	289	304	628	192	72	69	73	69	78	-0.025	7.31	-0.01
377	55.628	56.604	0.15	0.15	1.74	80	-1.25	1.38	74	-0.8	84	0.046	100	100	0.9	-0.1	403	325	238	265	288	304	628	192	72	69	73	69	78	-0.025	7.28	-0.01
378	55.776	56.754	0.15	0.15	1.74	80	-1.25	1.37	74	-0.8	84	0.046	100	100	0.9	0	402	325	238	264	288	303	629	192	72	69	73	69	78	-0.025	7.19	-0.01
379	55.925	56.904	0.15	0.15	1.74	80	-1.25	1.36	74	-0.8	84	0.046	100	100	0.9	0	402	325	238	264	288	303	629	192	72	69	73	69	78	-0.025	7.18	-0.01
380	56.072	57.055	0.15	0.15	1.76	80	-1.24	1.37	74	-0.8	84	0.046	99	100	0.9	0	402	325	237	263	287	303	629	192	72	69	73	70	78	-0.025	7.08	-0.01
381	56.220	57.205	0.15	0.15	1.75	80	-1.24	1.37	74	-0.8	84	0.046	100	100	0.9	0	402	325	237	263	287	303	629	192	72	69	73	70	78	-0.025	7.12	-0.01
382	56.368	57.356	0.15	0.15	1.77	80	-1.25	1.36	74	-0.8	84	0.046	100	100	0.9	0	401	325	237	263	286	302	628	191	72	69	73	70	78	-0.025	7.04	-0.01
383	56.516	57.507	0.15	0.15	1.77	80	-1.24	1.37	74	-0.8	84	0.046	100	100	0.9	0	401	325	237	263	286	302	628	191	72	69	73	70	78	-0.025	6.8	-0.01
384	56.664	57.657	0.15	0.15	1.77	80	-1.24	1.37	74	-0.8	85	0.046	100	100	0.9	0	401	325	237	262	285	302	627	192	71	69	73	70	78	-0.025	6.87	-0.01
385	56.813	57.807	0.15	0.15	1.77	80	-1.25	1.36	74	-0.8	84	0.046	100	100	0.8	-0.1	401	325	237	262	284	302	626	191	71	69	73	70	78	-0.025	6.86	-0.01
386	56.960	57.958	0.15	0.15	1.76	80	-1.24	1.37	74	-0.8	84	0.046	99	100	0.8	0	400	325	237	262	284	302	625	190	71	69	73	70	78	-0.025	6.75	-0.01
387	57.108	58.109	0.15	0.15	1.77	80	-1.25	1.38	74	-0.8	84	0.046	100	100	0.8	0	400	325	237	261	283	301	624	191	71	69	73	70	78	-0.025	6.93	-0.01
388	57.256	58.259	0.15	0.15	1.77	80	-1.25	1.36	74	-0.8	85	0.046	100	100	0.8	0	399	325	237	261	282	301	623	191	71	69	73	70	78	-0.025	6.81	-0.01
389	57.404	58.409	0.15	0.15	1.77	80	-1.25	1.37	74	-0.8	85	0.046	100	100	0.8	0	399	325	237	261	282	301	621	191	71	69	73	70	78	-0.024	6.62	-0.01
390	57.552	58.561	0.15	0.15	1.77	80	-1.24	1.38	74	-0.8	84	0.046	100	101	0.8	0	398	325	236	260	281	300	620	190	71	69	73	70	78	-0.025	6.62	-0.01
391	57.700	58.710	0.15	0.15	1.77	80	-1.25	1.37	74	-0.8	84	0.046	100	99	0.8	0	398	325	236	259	281	300	619	191	71	69	73	70	78	-0.024	6.55	-0.01
392	57.848	58.861	0.15	0.15	1.77	80	-1.25	1.36	74	-0.8	84	0.046	100	100	0.8	0	397	324	236	259	280	299	618	190	71	69	73	70	78	-0.024	6.55	-0.01
393	57.996	59.013	0.15	0.15	1.77	80	-1.24	1.38	74	-0.8	84	0.046	100	101	0.8	0	397	324	236	259	279	299	617	190	71	69	73	70	78	-0.024	6.5	-0.01
394	58.143	59.162	0.15	0.15	1.76	80	-1.25	1.38	74	-0.8	84	0.046	99	99	0.7	-0.1	396	324	236	258	278	298	617	190	71	70	73	70	78	-0.024	6.41	-0.01
395	58.291	59.313	0.15	0.15	1.77	80	-1.25	1.37	74	-0.8	84	0.046	100	100	0.7	0	395	324	235	258	278	298	616	190	71	70	72	70	78	-0.024	6.45	-0.01
396	58.439	59.463	0.15	0.15	1.75	80	-1.25	1.37	74	-0.8	84	0.046	100	100	0.7	0	395	324	235	257	277	298	616	189	71	70	72	70	78	-0.024	6.62	-0.01
397	58.587	59.614	0.15	0.15	1.75	80	-1.25	1.38	74	-0.8	84	0.046	100	100	0.7	0	394	323	234	257	277	297	617	189	71	70	72	70	78	-0.025	6.52	-0.01
398	58.735	59.764	0.15	0.15	1.74	80	-1.24	1.37	74	-0.8	84	0.046	100	100	0.7	0	394	323	235	257	276	297	616	190	71	70	72	70	78	-0.024	6.49	-0.01
399	58.883	59.915	0.15	0.15	1.74	80	-1.24	1.36	74	-0.8	84	0.046	100	100	0.7	0	394	323	234	256	276	297	616	189	71	70	72	70	78	-0.025	6.48	-0.01
400	59.032	60.066	0.15	0.15	1.74	80	-1.24	1.38	74	-0.8	84	0.046	100	100	0.7	0	393	323	234	256	275	296	617	189	71	70	72	70	78	-0.025	6.28	-0.01
401	59.180	60.216	0.15	0.15	1.76	80	-1.24	1.37	75	-0.8	84	0.046	100	99	0.7	0	393	322	233	256	275	296	617	190	71	70	72	70	78	-0.025	6.5	-0.01
402	59.328	60.366	0.15	0.15	1.75	80	-1.24	1.36	75	-0.8	84	0.046	100	99	0.7	0	392	322	233	255	274	295	618	189	71	70	72	70	78	-0.025	6.52	-0.01
403	59.476	60.517	0.15	0.15	1.77	80	-1.24	1.38	75	-0.8	84	0.046	100	100	0.7	0	392	322	233	255	274	295	618	190	71	70	72	70	78	-0.025	6.35	-0.01
404	59.624	60.667	0.15	0.15	1.78	80	-1.25	1.38	75	-0.8	85	0.046	100	99	0.7	0	392	322	233	255	273	295	618	191	71	70	72	70	78	-0.025	6.32	-0.01
405	59.772	60.818	0.15	0.15	1.77	80	-1.25	1.36	75	-0.8	85	0.046	100	100	0.6	-0.1	391	321	233	254	273	294	618	192	71	70	72	70	78	-0.025	6.36	-0.01
406	59.920	60.968	0.15	0.15	1.77	80	-1.25	1.37	75	-0.8	85	0.046	100	99	0.6	0	391	321	232	254	272	294	618	191	71	70	72	70	78	-0.025	6.28	-0.01

Wood Heater Test Data - ASTM E2780 / ASTM E2515

Run: 4

Manufacturer: Valley Comfort
Model: 20.2 Series
Tracking No.: 2253
Project No.: 0142WS013E
Test Date: 24-Aug-17
Beginning Clock Time: 09:40

Total Sampling Time: 454 min
Recording Interval: 1 min
Background Sample Volume: _____ cubic feet

Meter Box Y Factor: 1.003 (1) 0.997 (2) _____ (Amb)

Barometric Pressure:	Begin	Middle	End	Average
	28.58	28.62	28.59	28.60 "Hg

OMNI Equipment Numbers: 464,410,132,576,318,432,419,371,372,432,296-T55,567,413,592

PM Control Modules:
Dilution Tunnel MW(dry): 29.00 lb/lb-mole
Dilution Tunnel MW(wet): 28.78 lb/lb-mole
Dilution Tunnel H2O: 2.00 percent
Dilution Tunnel Static: -0.170 "H2O
Tunnel Area: 0.19635 ft2
Pitot Tube Cp: 0.99

Avg. Tunnel Velocity: 13.16 ft/sec.
Initial Tunnel Flow: 139.4 scfm
Average Tunnel Flow: 140.7 scfm
Post-Test Leak Check (1): 0.000 cfm @ -15 in. Hg
Post-Test Leak Check (2): 0.000 cfm @ -17 in. Hg
Average Test Piece Fuel Moisture: 22.21 Dry Basis %

Technician Signature: _____

Velocity Traverse Data

	Pt.1	Pt.2	Pt.3	Pt.4	Pt.5	Pt.6	Pt.7	Pt.8	Center	
Initial dP	0.030	0.046	0.044	0.026	0.024	0.044	0.046	0.028	0.046	"H2O
Temp:	78	78	78	78	78	78	78	78	78	°F

V_{strav} 13.08 ft/sec V_{scent} 14.68 ft/sec F_p 0.891

	Particulate Sampling Data														Fuel Weight (lb)		Temperature Data (°F)													Stack Gas Data		
Elapsed Time (min)	Gas Meter 1 (ft^3)	Gas Meter 2 (ft^3)	Sample Rate 1 (cfm)	Sample Rate 2 (cfm)	Orifice dH 1 ("H_2O)	Meter 1 Temp (°F)	Meter 1 Vacuum ("Hg)	Orifice dH 2 ("H_2O)	Meter 2 Temp (°F)	Meter 2 Vacuum ("Hg)	Dilution Tunnel (°F)	Dilution Tunnel Center dP	Pro. Rate 1	Pro. Rate 2	Scale Reading	Weight Change	Firebox Top	Firebox Bottom	Firebox Back	Firebox Left	Firebox Right	Avg. Stove Surface	Catalyst Exit	Stack	Filter 1	Dryer Exit 1	Filter 2	Dryer Exit 2	Ambient	Draft ("H_2O)	CO_2 (%)	CO (%)
407	60.068	61.119	0.15	0.15	1.77	80	-1.25	1.38	75	-0.8	85	0.046	100	100	0.6	0	390	321	232	254	272	294	618	191	71	70	72	70	78	-0.025	6.31	-0.01
408	60.216	61.269	0.15	0.15	1.78	80	-1.25	1.37	75	-0.8	84	0.046	100	99	0.6	0	390	320	231	253	271	293	619	192	71	70	72	70	78	-0.025	6.23	-0.01
409	60.364	61.420	0.15	0.15	1.78	80	-1.24	1.35	75	-0.8	84	0.046	100	100	0.6	0	390	320	231	253	271	293	619	191	71	70	72	70	78	-0.026	6.24	-0.01
410	60.511	61.572	0.15	0.15	1.78	80	-1.25	1.38	75	-0.8	84	0.046	99	101	0.6	0	390	320	231	253	271	293	620	192	71	70	72	70	78	-0.025	6.1	-0.01
411	60.660	61.721	0.15	0.15	1.77	80	-1.25	1.37	75	-0.8	84	0.046	100	99	0.6	0	390	319	230	252	270	292	621	192	71	70	72	70	78	-0.025	6.11	-0.01
412	60.808	61.872	0.15	0.15	1.77	80	-1.25	1.37	75	-0.8	84	0.046	100	100	0.6	0	390	319	230	252	270	292	622	194	71	70	72	70	78	-0.025	6.01	-0.01
413	60.956	62.023	0.15	0.15	1.77	80	-1.25	1.38	75	-0.8	84	0.046	100	100	0.6	0	390	318	229	251	269	291	622	194	71	70	72	71	78	-0.025	6	-0.01
414	61.104	62.173	0.15	0.15	1.77	80	-1.25	1.38	75	-0.8	84	0.046	100	99	0.6	0	389	318	229	251	269	291	623	195	71	70	72	71	78	-0.025	5.96	-0.01
415	61.252	62.324	0.15	0.15	1.76	80	-1.25	1.37	75	-0.8	85	0.046	100	100	0.5	-0.1	389	318	229	251	268	291	624	196	71	70	72	71	78	-0.026	5.84	-0.01
416	61.399	62.474	0.15	0.15	1.76	80	-1.25	1.36	75	-0.8	85	0.046	99	99	0.5	0	390	317	228	251	268	291	625	197	71	70	72	71	78	-0.026	5.9	-0.01
417	61.547	62.625	0.15	0.15	1.75	80	-1.25	1.37	75	-0.8	85	0.046	100	100	0.5	0	390	317	229	251	267	291	627	199	71	70	72	71	78	-0.026	5.86	-0.01
418	61.695	62.775	0.15	0.15	1.74	80	-1.24	1.37	74	-0.8	85	0.046	100	100	0.5	0	390	317	228	251	267	291	629	200	71	70	72	71	77	-0.026	5.85	-0.01
419	61.844	62.926	0.15	0.15	1.75	80	-1.24	1.36	74	-0.8	85	0.046	100	100	0.5	0	390	316	228	251	266	290	631	200	71	70	72	71	77	-0.026	5.73	-0.01
420	61.992	63.077	0.15	0.15	1.75	80	-1.24	1.37	74	-0.8	85	0.046	100	100	0.5	0	390	316	228	251	265	290	632	201	71	70	72	71	78	-0.026	5.84	-0.01
421	62.140	63.227	0.15	0.15	1.75	80	-1.24	1.38	74	-0.8	84	0.046	100	100	0.5	0	390	316	228	250	265	290	634	201	71	70	72	71	78	-0.026	5.94	-0.01
422	62.289	63.377	0.15	0.15	1.77	80	-1.24	1.36	75	-0.8	85	0.046	100	99	0.5	0	391	315	228	251	264	290	636	201	71	70	72	71	78	-0.026	5.86	-0.01
423	62.437	63.528	0.15	0.15	1.76	80	-1.25	1.37	74	-0.8	85	0.046	100	100	0.4	-0.1	391	315	228	250	263	289	637	203	71	70	72	71	78	-0.026	5.87	-0.01
424	62.585	63.679	0.15	0.15	1.77	80	-1.24	1.37	74	-0.8	85	0.046	100	100	0.4	0	391	315	228	250	263	289	637	204	71	70	72	71	78	-0.026	5.85	-0.01
425	62.733	63.829	0.15	0.15	1.77	80	-1.24	1.36	74	-0.8	85	0.046	100	100	0.4	0	392	314	228	251	262	289	637	206	71	70	72	71	78	-0.027	5.75	-0.01
426	62.881	63.980	0.15	0.15	1.77	80	-1.24	1.37	75	-0.8	85	0.046	100	100	0.4	0	392	314	228	250	261	289	638	206	71	70	72	71	78	-0.027	5.78	-0.02
427	63.029	64.131	0.15	0.15	1.76	80	-1.24	1.38	75	-0.8	85	0.046	100	100	0.4	0	392	314	228	250	261	289	640	208	71	71	72	71	78	-0.026	5.68	-0.01
428	63.177	64.281	0.15	0.15	1.78	80	-1.24	1.38	75	-0.8	85	0.046	100	99	0.4	0	392	313	229	250	260	289	641	206	71	71	72	71	78	-0.027	5.77	-0.02
429	63.325	64.432	0.15	0.15	1.78	80	-1.25	1.36	75	-0.8	85	0.046	100	100	0.4	0	393	313	228	250	260	289	643	206	71	71	72	71	78	-0.027	5.58	-0.01
430	63.472	64.583	0.15	0.15	1.78	80	-1.24	1.38	75	-0.8	85	0.046	99	100	0.4	0	393	313	229	250	259	289	643	209	71	71	72	71	78	-0.027	5.49	-0.01
431	63.621	64.733	0.15	0.15	1.77	80	-1.25	1.37	75	-0.8	85	0.046	100	99	0.4	0	393	312	228	250	258	288	644	209	71	71	72	71	78	-0.027	5.56	-0.01
432	63.769	64.884	0.15	0.15	1.77	80	-1.24	1.36	75	-0.8	85	0.046	100	100	0.4	0	393	312	229	250	258	288	643	209	71	71	72	71	78	-0.027	5.62	-0.01
433	63.916	65.034	0.15	0.15	1.76	80	-1.24	1.38	75	-0.8	85	0.046	99	99	0.4	0	393	311	229	250	257	288	643	209	71	71	72	71	78	-0.028	5.53	-0.01
434	64.064	65.185	0.15	0.15	1.77	80	-1.25	1.38	75	-0.8	85	0.046	100	100	0.3	-0.1	393	311	229	250	257	288	643	210	71	71	72	71	78	-0.028	5.5	-0.01
435	64.212	65.335	0.15	0.15	1.76	80	-1.24	1.37	75	-0.8	85	0.046	100	99	0.3	0	394	311	229	250	256	288	643	210	71	71	72	71	78	-0.028	5.41	-0.01
436	64.360	65.486	0.15	0.15	1.75	80	-1.24	1.36	75	-0.8	85	0.046	100	100	0.3	0	394	310	229	250	256	288	642	210	71	71	72	71	78	-0.027	5.42	-0.01
437	64.508	65.637	0.15	0.15	1.75	80	-1.24	1.38	75	-0.8	85	0.046	100	100	0.3	0	394	310	229	250	255	288	642	211	71	71	72	71	78	-0.027	5.62	-0.01
438	64.656	65.787	0.15	0.15	1.75	80	-1.25	1.37	75	-0.8	85	0.046	100	99	0.3	0	393	310	229	250	255	287	643	211	70	71	72	71	78	-0.027	5.75	-0.02
439	64.805	65.938	0.15	0.15	1.75	80	-1.25	1.36	75	-0.8	85	0.046	100	100	0.3	0	394	309	229	249	254	287	642	211	70	71	72	71	78	-0.027	5.58	-0.01
440	64.953	66.089	0.15	0.15	1.76	80	-1.25	1.38	75	-0.8	85	0.046	100	100	0.3	0	393	309	229	249	254	287	641	213	70	71	72	71	78	-0.027	5.42	-0.02
441	65.101	66.239	0.15	0.15	1.75	80	-1.24	1.38	75	-0.8	85	0.046	100	99	0.3	0	393	308	228	249	254	286	639	211	70	71	72	71	78	-0.028	5.52	-0.02
442	65.249	66.390	0.15	0.15	1.77	80	-1.25	1.37	74	-0.8	85	0.046	100	100	0.2	-0.1	393	308	228	249	253	286	639	211	70	71	72	71	78	-0.028	5.53	-0.02
443	65.398	66.541	0.15	0.15	1.77	80	-1.25	1.37	74	-0.8	85	0.046	100	100	0.2	0	393	308	228	249	253	286	639	214	70	71	72	71	77	-0.028	5.41	-0.02

Wood Heater Test Data - ASTM E2780 / ASTM E2515

Run: 4

Manufacturer: Valley Comfort
Model: 20.2 Series
Tracking No.: 2253
Project No.: 0142WS013E
Test Date: 24-Aug-17
Beginning Clock Time: 09:40

Total Sampling Time: 454 min
Recording Interval: 1 min
Background Sample Volume: _____ cubic feet

Meter Box Y Factor: 1.003 (1) 0.997 (2) _____ (Amb)

Barometric Pressure:	Begin	Middle	End	Average	
	28.58	28.62	28.59	28.60	"Hg

OMNI Equipment Numbers: 464,410,132,576,318,432,419,371,372,432,296-T55,567,413,592

PM Control Modules:
Dilution Tunnel MW(dry): 29.00 lb/lb-mole
Dilution Tunnel MW(wet): 28.78 lb/lb-mole
Dilution Tunnel H2O: 2.00 percent
Dilution Tunnel Static: -0.170 "H2O
Tunnel Area: 0.19635 ft2
Pitot Tube Cp: 0.99

Avg. Tunnel Velocity: 13.16 ft/sec.
Initial Tunnel Flow: 139.4 scfm
Average Tunnel Flow: 140.7 scfm
Post-Test Leak Check (1): 0.000 cfm @ -15 in. Hg
Post-Test Leak Check (2): 0.000 cfm @ -17 in. Hg
Average Test Piece Fuel Moisture: 22.21 Dry Basis %

Technician Signature: _____

Velocity Traverse Data

	Pt.1	Pt.2	Pt.3	Pt.4	Pt.5	Pt.6	Pt.7	Pt.8	Center	
Initial dP	0.030	0.046	0.044	0.026	0.024	0.044	0.046	0.028	0.046	"H2O
Temp:	78	78	78	78	78	78	78	78	78	°F

V_{strav} 13.08 ft/sec V_{scent} 14.68 ft/sec F_p 0.891

	Particulate Sampling Data														Fuel Weight (lb)		Temperature Data (°F)													Stack Gas Data		
Elapsed Time (min)	Gas Meter 1 (ft^3)	Gas Meter 2 (ft^3)	Sample Rate 1 (cfm)	Sample Rate 2 (cfm)	Orifice dH 1 ("H_2O)	Meter 1 Temp (°F)	Meter 1 Vacuum ("Hg)	Orifice dH 2 ("H_2O)	Meter 2 Temp (°F)	Meter 2 Vacuum ("Hg)	Dilution Tunnel (°F)	Dilution Tunnel Center dP	Pro. Rate 1	Pro. Rate 2	Scale Reading	Weight Change	Firebox Top	Firebox Bottom	Firebox Back	Firebox Left	Firebox Right	Avg. Stove Surface	Catalyst Exit	Stack	Filter 1	Dryer Exit 1	Filter 2	Dryer Exit 2	Ambient	Draft ("H_2O)	CO_2 (%)	CO (%)
444	65.546	66.691	0.15	0.15	1.77	80	-1.25	1.38	75	-0.8	85	0.046	100	99	0.2	0	393	307	228	249	253	286	639	214	70	71	72	71	78	-0.028	5.46	-0.02
445	65.694	66.842	0.15	0.15	1.77	80	-1.24	1.37	74	-0.8	85	0.046	100	100	0.2	0	392	307	227	249	252	285	639	215	70	71	72	71	78	-0.028	5.4	-0.02
446	65.842	66.992	0.15	0.15	1.76	80	-1.24	1.37	74	-0.8	85	0.046	100	100	0.2	0	392	307	227	249	252	285	639	215	70	71	72	71	77	-0.028	5.49	-0.02
447	65.990	67.144	0.15	0.15	1.78	80	-1.24	1.38	74	-0.8	85	0.046	100	101	0.2	0	392	307	227	249	252	285	639	215	70	71	72	71	77	-0.028	5.4	-0.02
448	66.138	67.294	0.15	0.15	1.78	80	-1.24	1.38	75	-0.8	85	0.046	100	99	0.2	0	392	306	226	249	252	285	640	217	70	71	72	71	77	-0.028	5.58	-0.02
449	66.285	67.444	0.15	0.15	1.78	80	-1.24	1.36	75	-0.8	85	0.046	99	99	0.2	0	392	306	226	249	252	285	644	217	70	71	72	71	77	-0.028	6.07	-0.01
450	66.433	67.596	0.15	0.15	1.78	80	-1.25	1.37	75	-0.8	85	0.046	100	101	0.1	-0.1	392	306	226	249	252	285	648	218	70	71	72	71	78	-0.028	6.31	-0.02
451	66.582	67.745	0.15	0.15	1.78	80	-1.25	1.38	75	-0.8	85	0.046	100	99	0.1	0	392	306	226	250	252	285	641	218	70	71	72	71	77	-0.028	6.14	-0.02
452	66.730	67.896	0.15	0.15	1.77	80	-1.25	1.36	75	-0.8	85	0.046	100	100	0.1	0	391	307	226	251	252	285	633	218	70	71	72	71	78	-0.028	6.12	-0.02
453	66.878	68.047	0.15	0.15	1.77	80	-1.25	1.37	75	-0.8	85	0.046	100	100	0.1	0	391	307	227	251	252	286	627	217	70	71	72	71	78	-0.028	5.84	-0.02
454	67.025	68.197	0.15	0.15	1.76	80	-1.25	1.38	75	-0.8	85	0.046	99	99	0.0	-0.1	390	308	228	252	253	286	623	218	70	71	72	72	78	-0.028	5.83	-0.02
Avg/Tot	67.025	68.197	0.15	0.15	1.76	77		1.37	72		84	0.046	100	100								38.4				71	74	72	78	-0.029		

Wood Heater Lab Data - ASTM E2780 / ASTM E2515

Manufacturer:	Valley Comfort	Equipment Numbers:	283A, 637, 592
Model:	20.2 Series		
Tracking No.:	2253		
Project No.:	0142WS013E		
Run #:	4		
Date:	8/24/17		

TRAIN 1 (First Hour emissions)

Sample Component	Reagent	Filter, Probe or Dish #	Weights		
			Final, mg	Tare, mg	Particulate, mg
B. Front filter catch	Filter	D241	120.7	120.3	0.4
C. Rear filter catch	Filter				0.0
D. Probe catch*	Probe				0.0
E. Filter seals catch*	Seals				0.0

Sub-Total	Total Particulate, mg:	0.4

TRAIN 1 (Post First Hour Change-out)

Sample Component	Reagent	Filter, Probe or Dish #	Weights		
			Final, mg	Tare, mg	Particulate, mg
B. Front filter catch	Filter	D242	122.8	122.2	0.6
C. Rear filter catch	Filter	D243	121.9	122.1	-0.2
D. Probe catch*	Probe	32	114742.4	114742.4	0.0
E. Filter seals catch*	Seals	R507	3374.1	3373.4	0.7

Sub-Total	Total Particulate, mg:	1.1
Train 1 Aggregate	Total Particulate, mg:	1.5

TRAIN 2

Sample Component	Reagent	Filter, Probe or Dish #	Weights		
			Final, mg	Tare, mg	Particulate, mg
A. Front filter catch	Filter	D244	122.1	120.5	1.6
B. Rear filter catch	Filter	D245	122.4	122.7	-0.3
C. Probe catch*	Probe	35	114327.0	114327.0	0.0
D. Filter seals catch*	Seals	R508	3309.0	3308.5	0.5

Total Particulate, mg:	1.8

AMBIENT

Sample Component	Reagent	Filter # or Probe #	Weights		
			Final, mg	Tare, mg	Particulate, mg
A. Front filter catch*	Filter				0.0

Total Particulate, mg:	0.0

*Particulate catch that results in a negative number, is assumed to be zero for probes and seals, negative numbers for filters are assumed to be part of the seal weight.

Component	Equations:
A. Front filter catch	Final (mg) - Tare (mg) = Particulate, mg
B. Rear filter catch	Final (mg) - Tare (mg) = Particulate, mg
C. Probe catch	Final (mg) - Tare (mg) = Particulate, mg

Technician Signature:

Wood Heater Test Results - ASTM E2780 / ASTM E2515

Manufacturer:	Valley Comfort
Model:	20.2 Series
Project No.:	0142WS013E
Tracking No.:	2253
Run:	4
Test Date:	08/24/17

Burn Rate	0.60 kg/hr dry
Average Tunnel Temperature	84 degrees Fahrenheit
Average Gas Velocity in Dilution Tunnel - vs	13.16 feet/second
Average Gas Flow Rate in Dilution Tunnel - Qsd	8443.7 dscf/hour
Average Delta p	0.046 inches H20
Total Time of Test	454 minutes

	AMBIENT	SAMPLE TRAIN 1	SAMPLE TRAIN 2	FIRST HOUR FILTER (TRAIN 1)
Total Sample Volume - Vm	0.000 cubic feet	67.025 cubic feet	68.197 cubic feet	8.816 cubic feet
Average Gas Meter Temperature	78 degrees Fahrenheit	77 degrees Fahrenheit	72 degrees Fahrenheit	72 degrees Fahrenheit
Total Sample Volume (Standard Conditions) - Vmstd	0.000 dscf	63.410 dscf	64.654 dscf	8.417 dscf
Total Particulates - m_n	0 mg	1.5 mg	1.8 mg	0.4 mg
Particulate Concentration (dry-standard) - C_f/C_s	0.000000 grams/dscf	0.00002 grams/dscf	0.00003 grams/dscf	0.00005 grams/dscf
Total Particulate Emissions - E_T	0.00 grams	1.51 grams	1.78 grams	0.40 grams
Particulate Emission Rate	0.00 grams/hour	0.20 grams/hour	0.24 grams/hour	0.40 grams/hour
Emissions Factor		0.33 g/kg	0.39 g/kg	0.45 g/kg
Difference from Average Total Particulate Emissions		0.13 grams	0.13 grams	
	Dual Train Comparison Results Are Acceptable			

	FINAL AVERAGE RESULTS
Complete Test Run	
Total Particulate Emissions - E_T	1.65 grams
Particulate Emission Rate	0.22 grams/hour
Emissions Factor	0.36 grams/kg
First Hour Emissions	
Total Particulate Emissions - E_T	0.40 grams
Particulate Emission Rate	0.40 grams/hour
Emissions Factor	0.45 grams/kg
7.5% of Average Total Particulate Emissions	0.12 grams

	QUALITY CHECKS
Filter Temps < 90 °F	OK
Filter Face Velocity (47 mm)	OK
Dryer Exit Temp < 80F	OK
Leakage Rate	OK
Ambient Temp (55-90°F)	OK
Negative Probe Weight Eval.	OK
Pro-Rate Variation	OK
Stove Surface ΔT	OK

Technician Signature: _____

Wood Heater Efficiency Results - CSA B415.1

Technician Signature: _____

Manufacturer:	Valley Comfort
Model:	20.2 Series
Date:	08/24/17
Run:	4
Control #:	0142WS013E
Test Duration:	454
Output Category:	I

Test Results in Accordance with CSA B415.1-09

	HHV Basis	LHV Basis
Overall Efficiency	79.1%	85.5%
Combustion Efficiency	97.6%	97.6%
Heat Transfer Efficiency	81%	87.6%

Output Rate (kJ/h)	9,382	8,900	(Btu/h)
Burn Rate (kg/h)	0.60	1.32	(lb/h)
Input (kJ/h)	11,859	11,249	(Btu/h)

Test Load Weight (dry kg)	4.53	9.98	dry lb
MC wet (%)	18.17140363		
MC dry (%)	22.21		
Particulate (g)	0.22		
CO (g)	177		
Test Duration (h)	7.57		

Emissions	Particulate	CO
g/MJ Output	0.00	2.50
g/kg Dry Fuel	0.05	39.14
g/h	0.03	23.43
lb/MM Btu Output	0.01	5.80

Air/Fuel Ratio (A/F)	14.55

VERSION: 2.2 12/14/2009

OMNI-Test Laboratories, Inc. **ASTM E2780 Wood Heater Run Sheets**

Client: **Valley Comfort Systems, Inc.** Project Number: **142WS013E** Run Number: **4**
Model: **20.2 Series** Tracking Number: **2253** Date: **8/24/17**
Test Crew: **A. Kravitz**
OMNI Equipment ID numbers: 464,410,132,576,318,432,419,371,372,432,296-T55,567,413,592

Wood Heater Run Notes

Air Control Settings

Primary:

Set to Low:

90° From Vertical:

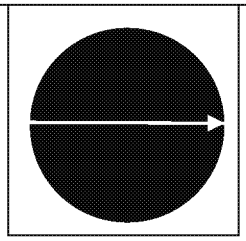

Secondary: Auto

Tertiary/Pilot: Fixed

Fan: On Min

Preburn Notes

Time	Notes

Test Notes

Sketch test fuel configuration:

Side View:

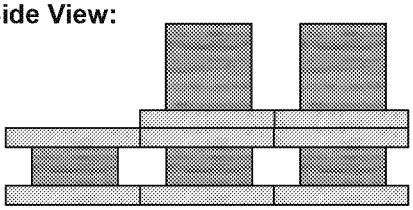

Start up procedures & Timeline:

Bypass: **Closed**
Fuel loaded by: **0:30**
Door closed at: **0:35**
Primary air: **Set @ 4:25**

Notes: **None**

Time	Notes
30:00	Set fan to test setting
60:00	Replaced Filter A

Technician Signature: Date: 9/20/2017

Control No. P-SFDT-0001, Effective Date: 01/12/2016

OMNI-Test Laboratories, Inc. **ASTM E2780 Wood Heater Run Sheets**

Client: **Valley Comfort Systems, Inc.** Project Number: **142WS013E** Run Number: **4**
Model: **20.2 Series** Tracking Number: **2253** Date: **8/24/17**
Test Crew: **A. Kravitz**
OMNI Equipment ID numbers: 464,410,132,576,318,432,419,371,372,432,296-T55,567,413,592

Wood Heater Supplemental Data

Start Time: 9:40 Booth #: N/A (site testing)

Stop Time: 17:14

Stack Gas Leak Check:

Initial: 0 Final: 0

Sample Train Leak Check:

A: 0 @ -15 "Hg
B: 0 @ -17 "Hg

Calibrations: Span Gas CO_2: 17.00 CO: 4.267

	Pre Test		Post Test	
	Zero	Span	Zero	Span
Time	7:50	7:55	17:17	17:22
CO_2	0.00	17.00	0.09	16.87
CO	0.000	4.267	-0.018	4.101

Air Velocity (ft/min): Initial: <50 Final: <50
Scale Audit (lbs): Initial: 10.0 Final: 10.0
Pitot Tube Leak Test: Initial: 0 Final: 0
Stack Diameter (in): 6
Induced Draft: 0
% Smoke Capture: 100
Flue Pipe Cleaned Prior to First Test in Series:
Date: 8/21/17 Initials: AK

	Initial	Middle	Ending
P_b (in/Hg)	28.58	28.62	28.59
RH (%)	42.3	35.8	25.0
Ambient (°F)	73.9	78.4	74.9

Tunnel Traverse

Microtector Reading	dP (in H_2O)	T(°F)
1	0.030	78
2	0.046	78
3	0.044	78
4	0.026	78
5	0.024	78
6	0.044	78
7	0.046	78
8	0.028	78
Center:		
-	0.046	78

Tunnel Static Pressure (in H_20):	
Beginning of Test	End of Test
-0.17	-0.17

Background Filter Volume: **N/A**

Technician Signature: Date: 9/20/2017

Control No. P-SFDT-0001, Effective Date: 01/12/2016

RUN 5

Wood Heater Preburn Data - ASTM E2780

Run:	5

Technician Signature: _____

Manufacturer:	Valley Comfort
Model:	20.2 Series
Tracking No.:	2253
Project No.:	0142WS013E
Test Date:	8/25/17
Beginning Clock Time:	9:32

Preburn Fuel Data

Fuel Piece Lengths (in.):	13	
Total Preburn Weight (lb):	14.9	
Fuel Moisture Readings (% DB):	19	23.6
	19.9	23.8
	23.8	23.8
	23.8	24.9
	19.4	22.1
Avg Preburn Moisture (% DB):	22.41	

Coal Bed Range (lb):	2.4 (min)	3.0 (max)

			Temperatures (°F)							
Elapsed Time (min)	Scale (lb)	Stack Draft (in H_2O)	FB Top	FB Bottom	FB Back	FB Left	FB Right	Avg. FB	Stack	Ambient
0	15.3	-0.062	748	403	292	494	528	493	456	70
1	15.1	-0.06	751	406	294	486	518	491	460	70
2	14.8	-0.062	758	409	295	481	510	490.6	460	70
3	14.5	-0.061	766	412	295	477	505	491	465	70
4	14.2	-0.062	774	414	295	474	500	491.4	470	69
5	13.9	-0.063	781	416	295	474	498	492.8	473	69
6	13.6	-0.063	788	418	295	474	496	494.2	477	69
7	13.3	-0.063	795	420	295	476	495	496.2	481	68
8	12.9	-0.063	801	421	296	478	496	498.4	483	68
9	12.6	-0.064	807	423	297	480	497	500.8	483	68
10	12.3	-0.063	812	424	298	483	498	503	485	68
11	12	-0.062	817	426	299	487	501	506	485	68
12	11.7	-0.063	822	427	300	490	504	508.6	484	67
13	11.4	-0.062	825	428	301	493	507	510.8	483	67
14	11.1	-0.062	829	429	302	496	511	513.4	481	68
15	10.7	-0.062	831	430	303	500	515	515.8	483	68
16	10.4	-0.062	834	431	305	503	519	518.4	483	68
17	10.1	-0.062	836	433	307	507	523	521.2	483	68
18	9.8	-0.063	838	435	309	511	527	524	484	67
19	9.5	-0.061	840	437	311	515	531	526.8	481	68
20	9.3	-0.06	841	439	313	519	536	529.6	478	68
21	8.9	-0.06	842	442	315	523	540	532.4	475	68
22	8.6	-0.062	843	444	318	527	544	535.2	471	68
23	8.4	-0.061	844	446	320	530	548	537.6	466	68
24	8.1	-0.06	845	449	322	534	553	540.6	465	68
25	7.8	-0.059	845	451	324	538	557	543	463	68
26	7.6	-0.059	846	454	327	541	562	546	458	69
27	7.3	-0.058	846	456	329	543	566	548	454	69
28	7.1	-0.058	848	459	331	547	571	551.2	451	69
29	6.8	-0.058	849	462	333	550	576	554	449	69
30	6.6	-0.058	849	464	335	554	581	556.6	446	69
31	6.4	-0.057	850	467	337	557	586	559.4	441	69
32	6.2	-0.057	852	470	339	563	590	562.8	440	69
33	6	-0.057	856	472	340	570	594	566.4	438	69
34	5.8	-0.057	859	474	343	574	598	569.6	434	70
35	5.7	-0.056	863	476	344	577	601	572.2	433	70
36	5.5	-0.056	869	478	346	581	604	575.6	435	70
37	5.4	-0.056	875	479	349	585	605	578.6	436	70
38	5.3	-0.055	878	481	350	587	607	580.6	433	70
39	5.1	-0.055	881	482	352	591	608	582.8	430	70

Wood Heater Preburn Data - ASTM E2780

Run:	5

Technician Signature: _____

Manufacturer:	Valley Comfort
Model:	20.2 Series
Tracking No.:	2253
Project No.:	0142WS013E
Test Date:	8/25/17
Beginning Clock Time:	9:32

Preburn Fuel Data

Fuel Piece Lengths (in.):	13	
Total Preburn Weight (lb):	14.9	
uel Moisture Readings (% DB):	19	23.6
	19.9	23.8
	23.8	23.8
	23.8	24.9
	19.4	22.1
Avg Preburn Moisture (% DB):	22.41	

Coal Bed Range (lb):	2.4 (min)	3.0 (max)

			Temperatures (°F)							
Elapsed Time (min)	Scale (lb)	Stack Draft (in H_2O)	FB Top	FB Bottom	FB Back	FB Left	FB Right	Avg. FB	Stack	Ambient
40	5	-0.055	882	484	353	593	610	584.4	426	70
41	4.9	-0.055	883	485	355	597	611	586.2	424	70
42	4.8	-0.055	883	486	356	598	612	587	421	70
43	4.7	-0.055	884	488	357	600	614	588.6	420	70
44	4.6	-0.054	884	489	359	603	615	590	418	70
45	4.5	-0.054	885	490	360	606	615	591.2	416	70
46	4.3	-0.054	886	491	361	608	615	592.2	414	70
47	4.3	-0.054	886	492	363	611	616	593.6	413	70
48	4.2	-0.054	887	493	365	614	617	595.2	412	70
49	4.1	-0.053	887	494	366	616	616	595.8	409	71
50	4	-0.053	886	496	367	618	616	596.6	408	70
51	3.9	-0.053	886	497	369	619	615	597.2	408	70
52	3.8	-0.053	885	498	370	620	615	597.6	408	71
53	3.7	-0.053	885	500	372	620	616	598.6	407	71
54	3.6	-0.052	883	501	373	620	617	598.8	403	71
55	3.5	-0.048	881	503	374	621	618	599.4	400	71
56	3.6	-0.045	876	504	378	615	615	597.6	333	71
57	3.5	-0.043	868	505	381	608	607	593.8	287	71
58	3.5	-0.041	860	506	383	599	600	589.6	257	71
59	3.5	-0.039	852	506	385	590	592	585	235	71
60	3.4	-0.038	844	506	387	583	584	580.8	220	71
61	3.4	-0.037	835	505	389	574	576	575.8	208	71
62	3.4	-0.036	826	505	390	566	568	571	199	71
63	3.4	-0.035	816	504	391	557	561	565.8	191	70
64	3.4	-0.034	807	503	391	549	554	560.8	186	70
65	3.4	-0.033	798	501	391	542	547	555.8	180	70
66	3.4	-0.032	790	500	391	536	540	551.4	174	70
67	3.4	-0.032	781	499	390	528	534	546.4	98	70
68	3.4	-0.03	772	497	390	522	527	541.6	135	70
69	3.3	-0.03	764	496	388	515	521	536.8	159	70
70	3.3	-0.029	755	494	388	508	515	532	157	70
71	3.3	-0.028	746	492	386	502	509	527	155	70
72	3.3	-0.028	737	490	385	495	503	522	153	70
73	3.3	-0.027	729	488	383	489	497	517.2	151	70
74	3.4	-0.027	720	485	382	483	491	512.2	150	70
75	3.4	-0.026	711	483	380	477	486	507.4	147	70
76	3.4	-0.026	702	481	378	472	481	502.8	146	70
77	3.4	-0.026	694	479	377	467	475	498.4	144	70
78	3.4	-0.025	685	477	375	461	471	493.8	142	70
79	3.4	-0.025	677	475	373	456	466	489.4	141	70

Wood Heater Preburn Data - ASTM E2780

Run:	5

Technician Signature: _____

Manufacturer:	Valley Comfort
Model:	20.2 Series
Tracking No.:	2253
Project No.:	0142WS013E
Test Date:	8/25/17
Beginning Clock Time:	9:32

Preburn Fuel Data

Fuel Piece Lengths (in.):	13	
Total Preburn Weight (lb):	14.9	
uel Moisture Readings (% DB):	19	23.6
	19.9	23.8
	23.8	23.8
	23.8	24.9
	19.4	22.1
Avg Preburn Moisture (% DB):	22.41	

Coal Bed Range (lb):	2.4 (min)	3.0 (max)

			Temperatures (°F)							
Elapsed Time (min)	Scale (lb)	Stack Draft (in H_2O)	FB Top	FB Bottom	FB Back	FB Left	FB Right	Avg. FB	Stack	Ambient
80	3.4	-0.024	668	473	371	451	461	484.8	141	70
81	3.4	-0.024	661	471	370	446	456	480.8	138	70
82	3.4	-0.024	653	469	368	441	452	476.6	137	70
83	3.4	-0.023	645	468	366	436	447	472.4	135	70
84	3.3	-0.023	638	466	364	433	443	468.8	134	70
85	3.4	-0.023	631	464	362	427	439	464.6	133	70
86	3.3	-0.023	624	462	360	423	435	460.8	131	70
87	3.4	-0.022	618	460	358	419	430	457	130	70
88	3.4	-0.022	611	459	356	415	426	453.4	129	70
89	3.4	-0.022	605	457	354	411	422	449.8	128	70
90	3.4	-0.021	599	455	352	407	419	446.4	128	70
91	3.4	-0.022	593	453	350	403	415	442.8	128	70
92	3.4	-0.021	587	451	348	398	411	439	125	70
93	3.4	-0.021	582	449	346	396	407	436	124	69
94	3.4	-0.021	576	448	344	392	404	432.8	124	70
95	3.4	-0.021	571	446	342	389	400	429.6	124	69
96	3.4	-0.021	566	444	340	386	397	426.6	125	69
97	3.4	-0.021	562	442	338	382	394	423.6	129	69
98	3.4	-0.022	558	440	336	378	392	420.8	133	69
99	3.4	-0.022	556	439	334	377	389	419	138	69
100	3.3	-0.024	552	437	331	374	388	416.4	146	69
101	3.3	-0.024	549	436	329	373	387	414.8	154	69
102	3.3	-0.025	547	435	327	371	386	413.2	161	69
103	3.3	-0.025	545	434	325	371	385	412	168	69
104	3.3	-0.026	543	434	323	370	386	411.2	175	69
105	3.3	-0.027	542	434	321	370	387	410.8	180	69
106	3.2	-0.029	541	433	319	370	388	410.2	187	69
107	3.3	-0.029	540	434	318	370	389	410.2	194	69
108	3.2	-0.03	540	434	317	371	391	410.6	200	69
109	3.2	-0.03	540	435	316	373	393	411.4	204	69
110	3.2	-0.035	540	436	315	375	395	412.2	208	69
111	3.2	-0.035	541	437	314	377	397	413.2	212	69
112	3.1	-0.033	541	438	314	379	400	414.4	215	69
113	3.1	-0.032	542	440	314	381	403	416	220	69
114	3.1	-0.033	543	442	314	384	406	417.8	222	69
115	3	-0.034	543	444	314	384	408	418.6	225	69
116	3	-0.034	543	445	314	386	410	419.6	228	69
117	3	-0.034	542	447	314	387	412	420.4	230	69
118	3	-0.035	543	448	315	387	414	421.4	230	69
119	3	-0.035	543	449	315	389	416	422.4	230	69

Wood Heater Test Fuel Data - ASTM E2780

Manufacturer:	Valley Comfort	PB Time	7:15	12% Cal:	12.0
Model:	20.2 Series	PB Temp	68	22% Cal:	22.0
Tracking No.:	2253				
Project No.:	0142WS013E	Test Time	7:15		
Test Date:	8/25/2017	Test Temp	68		
Run No.:	5				

Firebox Volume (ft^3):	1.82
Fuel Piece Length (in):	13
2x4 Crib Weight (lb):	5.1
4x4 Crib Weight (lb):	6.8

Total Fuel Weight (Dry Basis, lb):	9.8	
Fuel Density (lb/ft^3, Dry Basis):	27.72	OK
Loading Density (lb/ft^3, Wet Basis):	6.54	OK
2x4 Percentage:	43%	OK

Coal Bed Range (20-25%): 2.38 - 2.975

Test Fuel Piece	Weight (lb)	Size	Readings (Dry Basis %)			Dry Weight (lb)
1	1.2	2"x 4"	21.4	19.2	19.5	1.00
2	1.3	2"x 4"	22.4	23.3	23.8	1.06
3	1.3	2"x 4"	20.0	20.5	20.5	1.08
4	3.3	4"x 4"	22.5	22.2	25.0	2.68
5	3.1	4"x 4"	19.0	22.1	19.4	2.58

Spacer Readings (Dry Basis %)			
19.7	20.1		
21.0	21.7		
16.8	20.5		
17.7	14.6		
22.9	19.9		
19.1			
16.8			
18.5			
22.5			

Technician Signature: _____

Wood Heater Test Data - ASTM E2780 / ASTM E2515

Run: 5

Manufacturer: Valley Comfort
Model: 20.2 Series
Tracking No.: 2253
Project No.: 0142WS013E
Test Date: 25-Aug-17
Beginning Clock Time: 09:32

Total Sampling Time: 227 min
Recording Interval: 1 min
Background Sample Volume: _____ cubic feet

Meter Box Y Factor: 1.003 (1) 0.997 (2) _____ (Amb)

Barometric Pressure:	Begin	Middle	End	Average
	28.76	28.75	28.74	28.75 "Hg

OMNI Equipment Numbers: 464,410,132,576,318,432,419,371,372,432,296-T55,567,413,592

PM Control Modules: 371/372
Dilution Tunnel MW(dry): 29.00 lb/lb-mole
Dilution Tunnel MW(wet): 28.78 lb/lb-mole
Dilution Tunnel H2O: 2.00 percent
Dilution Tunnel Static: -0.170 "H2O
Tunnel Area: 0.19635 ft2
Pitot Tube Cp: 0.99

Avg. Tunnel Velocity: 13.33 ft/sec.
Initial Tunnel Flow: 140.2 scfm
Average Tunnel Flow: 141.5 scfm
Post-Test Leak Check (1): 0.000 cfm @ -16 in. Hg
Post-Test Leak Check (2): 0.000 cfm @ -17 in. Hg
Average Test Piece Fuel Moisture: 21.39 Dry Basis %

Technician Signature: _____

Velocity Traverse Data

	Pt.1	Pt.2	Pt.3	Pt.4	Pt.5	Pt.6	Pt.7	Pt.8	Center	
Initial dP	0.028	0.048	0.040	0.028	0.030	0.046	0.044	0.026	0.050	"H2O
Temp:	80	80	80	80	80	80	80	80	80	°F

V_{strav} 13.19 ft/sec V_{scent} 15.29 ft/sec F_p 0.863

	Particulate Sampling Data														Fuel Weight (lb)		Temperature Data (°F)													Stack Gas Data		
Elapsed Time (min)	Gas Meter 1 (ft^3)	Gas Meter 2 (ft^3)	Sample Rate 1 (cfm)	Sample Rate 2 (cfm)	Orifice dH 1 ("H_2O)	Meter 1 Temp (°F)	Meter 1 Vacuum ("Hg)	Orifice dH 2 ("H_2O)	Meter 2 Temp (°F)	Meter 2 Vacuum ("Hg)	Dilution Tunnel (°F)	Dilution Tunnel Center dP	Pro. Rate 1	Pro. Rate 2	Scale Reading	Weight Change	Firebox Top	Firebox Bottom	Firebox Back	Firebox Left	Firebox Right	Avg. Stove Surface	Catalyst Exit	Stack	Filter 1	Dryer Exit 1	Filter 2	Dryer Exit 2	Ambient	Draft ("H_2O)	CO_2 (%)	CO (%)
0	0.000	0.000			1.60	72	-1.11	1.24	71	-0.4	112	0.050			11.9		544	451	316	387	417	423	679	446	71	68	72	67	69	-0.062	2.2	0.04
1	0.135	0.143	0.14	0.14	1.79	71	-1.33	1.44	71	-0.7	100	0.050	93	97	11.8	-0.1	537	451	318	382	411	420	598	397	72	66	73	66	69	-0.063	1.26	0.11
2	0.282	0.294	0.15	0.15	1.78	71	-1.35	1.43	71	-0.7	99	0.050	101	102	11.6	-0.2	539	451	318	379	406	419	755	419	73	66	73	66	69	-0.069	7.38	-0.01
3	0.430	0.447	0.15	0.15	1.78	71	-1.36	1.43	71	-0.7	100	0.050	102	103	11.5	-0.1	551	452	316	377	403	420	879	462	73	66	73	65	69	-0.071	7.01	-0.01
4	0.577	0.598	0.15	0.15	1.77	71	-1.36	1.43	71	-0.7	102	0.050	101	102	11.4	-0.1	564	452	313	376	401	421	923	478	73	66	73	65	69	-0.072	7.54	0
5	0.724	0.750	0.15	0.15	1.78	71	-1.34	1.42	71	-0.7	98	0.050	101	102	11.2	-0.2	579	453	311	376	400	424	936	472	73	66	73	65	69	-0.068	8.11	0.12
6	0.871	0.902	0.15	0.15	1.77	71	-1.35	1.44	71	-0.7	94	0.050	101	102	11.1	-0.1	591	454	309	374	399	425	974	425	73	66	73	65	69	-0.068	7	-0.01
7	1.018	1.053	0.15	0.15	1.76	71	-1.36	1.42	71	-0.7	93	0.050	101	101	11.0	-0.1	600	455	307	375	397	427	953	408	73	66	73	65	69	-0.067	6.71	-0.02
8	1.165	1.204	0.15	0.15	1.77	71	-1.34	1.42	71	-0.7	93	0.050	101	101	10.9	-0.1	607	455	305	375	395	427	954	403	73	66	73	65	69	-0.067	7.38	-0.02
9	1.312	1.356	0.15	0.15	1.77	71	-1.35	1.42	71	-0.7	93	0.050	101	102	10.8	-0.1	614	456	303	376	393	428	964	404	73	66	73	65	69	-0.068	7.77	-0.02
10	1.458	1.506	0.15	0.15	1.76	71	-1.35	1.42	71	-0.7	93	0.050	100	101	10.7	-0.1	621	456	302	378	391	430	968	409	73	67	73	66	69	-0.068	7.83	-0.01
11	1.605	1.657	0.15	0.15	1.75	71	-1.35	1.41	71	-0.7	93	0.050	101	101	10.6	-0.1	626	457	300	379	390	430	960	413	73	67	73	66	69	-0.069	7.96	-0.01
12	1.751	1.808	0.15	0.15	1.76	71	-1.35	1.41	71	-0.7	93	0.050	100	101	10.5	-0.1	631	457	299	380	389	431	959	409	73	67	73	66	69	-0.068	8.15	0
13	1.897	1.958	0.15	0.15	1.75	71	-1.34	1.41	71	-0.7	93	0.050	100	101	10.4	-0.1	638	457	297	383	389	433	976	411	73	67	73	66	69	-0.068	8.46	0
14	2.044	2.108	0.15	0.15	1.75	71	-1.34	1.40	71	-0.7	93	0.050	101	101	10.3	-0.1	644	457	295	385	388	434	978	412	73	67	73	66	69	-0.068	8.57	0.01
15	2.190	2.259	0.15	0.15	1.75	71	-1.35	1.41	71	-0.7	93	0.050	100	101	10.1	-0.2	650	457	294	387	389	435	979	411	73	67	73	66	69	-0.068	8.58	0.03
16	2.336	2.409	0.15	0.15	1.76	71	-1.35	1.41	71	-0.7	94	0.050	100	101	10.0	-0.1	657	456	293	388	389	437	988	412	73	67	73	66	69	-0.068	8.68	0.05
17	2.482	2.560	0.15	0.15	1.76	71	-1.35	1.40	71	-0.7	94	0.050	100	101	9.9	-0.1	664	456	292	390	390	438	1000	412	73	67	74	66	69	-0.068	8.78	0.09
18	2.628	2.710	0.15	0.15	1.76	71	-1.34	1.39	71	-0.7	94	0.050	100	101	9.8	-0.1	671	456	291	391	391	440	1007	412	73	67	74	66	69	-0.068	8.62	0.08
19	2.774	2.861	0.15	0.15	1.77	71	-1.34	1.40	71	-0.7	94	0.050	100	101	9.7	-0.1	677	455	290	394	392	442	1006	410	73	67	74	66	69	-0.068	8.47	0.05
20	2.920	3.010	0.15	0.15	1.77	71	-1.35	1.40	71	-0.7	94	0.050	100	100	9.6	-0.1	684	455	290	395	393	443	1005	407	73	68	74	66	69	-0.068	8.54	0.03
21	3.066	3.160	0.15	0.15	1.77	71	-1.35	1.39	71	-0.7	93	0.050	100	101	9.5	-0.1	688	454	289	398	394	445	1003	408	73	68	74	66	69	-0.067	8.58	0
22	3.212	3.310	0.15	0.15	1.76	71	-1.34	1.40	71	-0.7	93	0.050	100	101	9.3	-0.2	693	454	289	400	395	446	1002	406	73	68	74	66	69	-0.068	8.59	0
23	3.358	3.460	0.15	0.15	1.77	71	-1.34	1.40	71	-0.7	94	0.050	100	101	9.2	-0.1	698	454	289	402	396	448	1001	404	73	68	74	66	69	-0.068	8.66	-0.01
24	3.504	3.610	0.15	0.15	1.77	71	-1.35	1.39	71	-0.7	93	0.050	100	101	9.1	-0.1	702	453	288	404	398	449	998	400	73	68	74	67	69	-0.068	8.89	-0.01
25	3.649	3.760	0.15	0.15	1.77	71	-1.34	1.38	71	-0.7	94	0.050	99	101	9.0	-0.1	705	453	288	406	399	450	997	399	73	68	74	67	69	-0.070	8.83	-0.01
26	3.795	3.910	0.15	0.15	1.75	71	-1.35	1.40	71	-0.7	93	0.050	100	101	8.9	-0.1	709	452	289	409	401	452	990	396	73	68	74	67	69	-0.071	8.9	0
27	3.941	4.059	0.15	0.15	1.74	71	-1.35	1.39	71	-0.7	93	0.050	100	100	8.8	-0.1	711	452	289	411	404	453	989	393	73	68	74	67	69	-0.070	8.8	0.01
28	4.087	4.209	0.15	0.15	1.74	71	-1.35	1.38	71	-0.8	93	0.050	100	101	8.7	-0.1	715	451	289	413	406	455	999	398	73	68	74	67	69	-0.071	9.26	0.37
29	4.232	4.359	0.15	0.15	1.76	71	-1.34	1.38	71	-0.8	93	0.050	99	101	8.6	-0.1	720	450	289	417	409	457	1011	401	74	69	74	67	69	-0.071	9.27	0.83
30	4.378	4.509	0.15	0.15	1.76	71	-1.35	1.39	71	-0.8	93	0.050	100	101	8.5	-0.1	724	450	289	420	412	459	1017	401	74	69	74	67	69	-0.070	9.28	0.9
31	4.524	4.658	0.15	0.15	1.76	71	-1.34	1.39	71	-0.8	93	0.050	100	100	8.4	-0.1	730	449	289	424	415	461	1028	402	74	69	74	67	69	-0.071	9.13	0.72
32	4.669	4.808	0.15	0.15	1.76	71	-1.35	1.38	71	-0.8	93	0.050	99	101	8.3	-0.1	735	448	289	427	419	464	1042	399	74	69	74	67	69	-0.070	9.21	0.77
33	4.815	4.958	0.15	0.15	1.73	71	-1.35	1.38	71	-0.8	93	0.050	100	101	8.1	-0.2	741	448	289	431	423	466	1046	398	74	69	74	67	69	-0.071	9.18	0.84
34	4.961	5.108	0.15	0.15	1.72	72	-1.34	1.39	71	-0.8	93	0.050	100	101	8.0	-0.1	746	447	290	435	426	469	1050	395	74	69	74	67	69	-0.070	9.08	0.81
35	5.106	5.257	0.15	0.15	1.72	72	-1.34	1.39	71	-0.8	93	0.050	99	100	7.9	-0.1	750	446	290	437	429	470	1058	395	74	69	74	68	70	-0.070	9.05	0.79
36	5.251	5.407	0.15	0.15	1.72	72	-1.35	1.38	72	-0.8	92	0.050	99	100	7.8	-0.1	755	446	291	441	432	473	1069	392	74	69	74	68	70	-0.069	8.76	0.6

Wood Heater Test Data - ASTM E2780 / ASTM E2515

Run: 5

Manufacturer: Valley Comfort
Model: 20.2 Series
Tracking No.: 2253
Project No.: 0142WS013E
Test Date: 25-Aug-17
Beginning Clock Time: 09:32

Total Sampling Time: 227 min
Recording Interval: 1 min
Background Sample Volume: _____ cubic feet

Meter Box Y Factor: 1.003 (1) 0.997 (2) _____ (Amb)

Barometric Pressure:	Begin	Middle	End	Average
	28.76	28.75	28.74	28.75 "Hg

OMNI Equipment Numbers: 464,410,132,576,318,432,419,371,372,432,296-T55,567,413,592

PM Control Modules: 371/372
Dilution Tunnel MW(dry): 29.00 lb/lb-mole
Dilution Tunnel MW(wet): 28.78 lb/lb-mole
Dilution Tunnel H2O: 2.00 percent
Dilution Tunnel Static: -0.170 "H2O
Tunnel Area: 0.19635 ft2
Pitot Tube Cp: 0.99

Avg. Tunnel Velocity: 13.33 ft/sec.
Initial Tunnel Flow: 140.2 scfm
Average Tunnel Flow: 141.5 scfm
Post-Test Leak Check (1): 0.000 cfm @ -16 in. Hg
Post-Test Leak Check (2): 0.000 cfm @ -17 in. Hg
Average Test Piece Fuel Moisture: 21.39 Dry Basis %

Technician Signature: _____

Velocity Traverse Data

	Pt.1	Pt.2	Pt.3	Pt.4	Pt.5	Pt.6	Pt.7	Pt.8	Center	
Initial dP	0.028	0.048	0.040	0.028	0.030	0.046	0.044	0.026	0.050	"H2O
Temp:	80	80	80	80	80	80	80	80	80	°F

V_{strav} 13.19 ft/sec V_{scent} 15.29 ft/sec F_p 0.863

	Particulate Sampling Data														Fuel Weight (lb)		Temperature Data (°F)													Stack Gas Data		
Elapsed Time (min)	Gas Meter 1 (ft^3)	Gas Meter 2 (ft^3)	Sample Rate 1 (cfm)	Sample Rate 2 (cfm)	Orifice dH 1 ("H_2O)	Meter 1 Temp (°F)	Meter 1 Vacuum ("Hg)	Orifice dH 2 ("H_2O)	Meter 2 Temp (°F)	Meter 2 Vacuum ("Hg)	Dilution Tunnel (°F)	Dilution Tunnel Center dP	Pro. Rate 1	Pro. Rate 2	Scale Reading	Weight Change	Firebox Top	Firebox Bottom	Firebox Back	Firebox Left	Firebox Right	Avg. Stove Surface	Catalyst Exit	Stack	Filter 1	Dryer Exit 1	Filter 2	Dryer Exit 2	Ambient	Draft ("H_2O)	CO_2 (%)	CO (%)
37	5.397	5.557	0.15	0.15	1.72	72	-1.35	1.38	72	-0.8	92	0.050	100	100	7.7	-0.1	760	445	291	445	434	475	1084	393	74	69	74	68	70	-0.069	8.78	0.59
38	5.543	5.707	0.15	0.15	1.73	72	-1.34	1.40	72	-0.8	92	0.050	100	100	7.6	-0.1	765	444	292	446	435	476	1088	390	74	70	74	68	70	-0.069	8.62	0.52
39	5.689	5.857	0.15	0.15	1.72	72	-1.34	1.39	72	-0.8	92	0.050	100	100	7.5	-0.1	768	443	292	450	437	478	1087	387	74	70	74	68	70	-0.069	8.51	0.49
40	5.835	6.007	0.15	0.15	1.74	72	-1.34	1.38	72	-0.8	92	0.050	100	100	7.4	-0.1	771	442	293	453	438	479	1085	386	74	70	74	68	70	-0.068	8.5	0.49
41	5.981	6.157	0.15	0.15	1.75	72	-1.34	1.39	72	-0.8	92	0.050	100	100	7.3	-0.1	772	442	293	456	439	480	1083	383	74	70	74	68	70	-0.068	8.49	0.49
42	6.127	6.306	0.15	0.15	1.75	72	-1.34	1.39	72	-0.8	91	0.050	100	100	7.2	-0.1	775	441	294	459	440	482	1081	381	74	70	74	68	70	-0.065	8.53	0.49
43	6.273	6.456	0.15	0.15	1.75	72	-1.35	1.38	72	-0.8	91	0.050	100	100	7.2	0	776	440	295	461	441	483	1079	377	74	70	74	68	70	-0.065	8.58	0.51
44	6.419	6.606	0.15	0.15	1.75	72	-1.34	1.38	72	-0.8	91	0.050	100	100	7.1	-0.1	777	440	295	463	441	483	1077	374	74	70	74	68	70	-0.065	8.6	0.53
45	6.565	6.757	0.15	0.15	1.75	72	-1.34	1.38	72	-0.8	90	0.050	99	101	7.0	-0.1	778	439	296	464	442	484	1076	371	74	70	74	68	70	-0.065	8.74	0.56
46	6.711	6.906	0.15	0.15	1.75	72	-1.34	1.39	72	-0.8	90	0.050	99	100	6.9	-0.1	778	438	297	466	443	484	1076	370	74	70	74	68	70	-0.065	8.73	0.52
47	6.857	7.056	0.15	0.15	1.76	72	-1.34	1.38	72	-0.8	90	0.050	99	100	6.8	-0.1	779	437	298	467	444	485	1076	368	74	70	74	69	70	-0.064	8.55	0.52
48	7.003	7.206	0.15	0.15	1.76	72	-1.34	1.39	72	-0.8	90	0.050	99	100	6.7	-0.1	780	436	298	467	444	485	1073	364	74	70	74	69	70	-0.067	8.64	0.51
49	7.149	7.356	0.15	0.15	1.76	72	-1.33	1.39	72	-0.8	90	0.050	99	100	6.6	-0.1	780	436	299	470	445	486	1070	364	74	71	74	69	70	-0.068	8.61	0.59
50	7.295	7.506	0.15	0.15	1.76	72	-1.34	1.39	72	-0.8	90	0.050	99	100	6.5	-0.1	780	435	299	470	445	486	1069	362	74	71	74	69	70	-0.063	8.84	0.6
51	7.441	7.656	0.15	0.15	1.76	72	-1.34	1.38	72	-0.8	90	0.050	99	100	6.5	0	780	435	300	471	446	486	1066	360	74	71	74	69	70	-0.063	8.76	0.65
52	7.587	7.806	0.15	0.15	1.76	72	-1.34	1.39	72	-0.8	90	0.050	99	100	6.4	-0.1	779	434	301	472	446	486	1066	359	74	71	74	69	70	-0.063	8.7	0.65
53	7.734	7.956	0.15	0.15	1.76	72	-1.34	1.39	72	-0.8	89	0.050	100	100	6.3	-0.1	780	434	301	474	447	487	1067	357	74	71	74	69	70	-0.064	8.89	0.7
54	7.880	8.106	0.15	0.15	1.76	72	-1.35	1.38	72	-0.8	89	0.050	99	100	6.2	-0.1	779	433	302	474	448	487	1060	353	74	71	75	69	70	-0.063	8.88	0.83
55	8.026	8.255	0.15	0.15	1.75	72	-1.34	1.38	72	-0.8	89	0.050	99	99	6.1	-0.1	779	433	302	474	448	487	1046	352	74	71	74	69	70	-0.063	8.83	0.91
56	8.171	8.406	0.15	0.15	1.76	72	-1.34	1.39	73	-0.8	88	0.050	99	100	6.0	-0.1	777	432	303	474	449	487	1034	346	74	71	74	69	70	-0.063	8.73	0.82
57	8.317	8.555	0.15	0.15	1.76	72	-1.34	1.39	73	-0.8	88	0.050	99	99	5.9	-0.1	776	432	303	474	449	487	1029	346	74	71	74	69	70	-0.063	8.82	0.77
58	8.463	8.705	0.15	0.15	1.76	72	-1.34	1.39	73	-0.8	88	0.050	99	100	5.8	-0.1	775	432	304	475	450	487	1030	343	74	71	75	69	70	-0.063	8.73	0.69
59	8.609	8.855	0.15	0.15	1.76	72	-1.34	1.38	73	-0.8	88	0.050	99	100	5.8	0	775	431	304	474	450	487	1035	340	74	71	74	69	70	-0.062	8.79	0.62
60	8.755	9.006	0.15	0.15	1.76	72	-1.34	1.39	73	-0.8	88	0.050	99	100	5.7	-0.1	775	431	305	474	450	487	1038	339	74	71	74	69	70	-0.062	8.73	0.6
61	8.903	9.155	0.15	0.15	1.78	73	-1.29	1.38	73	-0.8	88	0.050	100	99	5.6	-0.1	775	431	305	474	451	487	1040	335	75	71	74	69	70	-0.062	8.73	0.58
62	9.050	9.305	0.15	0.15	1.78	73	-1.28	1.38	73	-0.8	87	0.050	100	100	5.5	-0.1	775	431	306	474	452	488	1041	336	76	71	75	70	70	-0.062	8.77	0.55
63	9.197	9.456	0.15	0.15	1.78	73	-1.28	1.39	73	-0.8	87	0.050	100	100	5.5	0	775	430	306	473	452	487	1041	336	76	71	74	70	70	-0.061	8.85	0.47
64	9.344	9.605	0.15	0.15	1.78	73	-1.29	1.39	73	-0.8	87	0.050	100	99	5.4	-0.1	776	430	307	473	453	488	1041	332	76	71	75	70	70	-0.062	8.82	0.43
65	9.491	9.756	0.15	0.15	1.78	73	-1.29	1.38	73	-0.8	88	0.050	100	100	5.3	-0.1	776	430	307	473	453	488	1040	332	76	71	75	70	70	-0.061	8.93	0.4
66	9.638	9.905	0.15	0.15	1.78	73	-1.29	1.38	73	-0.8	87	0.050	100	99	5.3	0	776	430	308	473	452	488	1038	330	76	72	75	70	70	-0.061	9.16	0.36
67	9.785	10.056	0.15	0.15	1.78	73	-1.29	1.39	73	-0.8	87	0.050	100	100	5.2	-0.1	776	430	309	474	452	488	1037	328	76	72	75	70	70	-0.061	9.07	0.27
68	9.932	10.206	0.15	0.15	1.78	73	-1.28	1.39	73	-0.8	87	0.050	100	100	5.1	-0.1	776	429	309	474	452	488	1035	328	75	72	75	70	70	-0.060	9.09	0.25
69	10.080	10.356	0.15	0.15	1.78	73	-1.28	1.38	73	-0.8	87	0.050	100	100	5.0	-0.1	775	429	310	474	452	488	1032	326	75	72	75	70	70	-0.060	9.16	0.23
70	10.227	10.506	0.15	0.15	1.78	73	-1.28	1.38	73	-0.8	87	0.050	100	100	5.0	0	775	429	310	476	451	488	1030	325	75	72	75	70	70	-0.060	9.1	0.25
71	10.374	10.656	0.15	0.15	1.78	73	-1.28	1.39	73	-0.8	86	0.050	100	100	4.9	-0.1	775	428	311	476	451	488	1029	323	75	72	75	70	70	-0.060	9.04	0.27
72	10.521	10.806	0.15	0.15	1.79	73	-1.29	1.38	73	-0.8	87	0.050	100	100	4.9	0	774	428	312	478	451	489	1027	324	75	72	75	70	70	-0.060	9.09	0.3
73	10.668	10.956	0.15	0.15	1.77	73	-1.29	1.37	73	-0.8	86	0.050	100	100	4.8	-0.1	774	428	312	478	451	489	1025	324	75	72	75	70	71	-0.060	9.25	0.27

Wood Heater Test Data - ASTM E2780 / ASTM E2515

Run: 5

Manufacturer: Valley Comfort
Model: 20.2 Series
Tracking No.: 2253
Project No.: 0142WS013E
Test Date: 25-Aug-17
Beginning Clock Time: 09:32

Total Sampling Time: 227 min
Recording Interval: 1 min
Background Sample Volume: _____ cubic feet

Meter Box Y Factor: 1.003 (1) 0.997 (2) _____ (Amb)

Barometric Pressure:	Begin	Middle	End	Average
	28.76	28.75	28.74	28.75 "Hg

OMNI Equipment Numbers: 464,410,132,576,318,432,419,371,372,432,296-T55,567,413,592

PM Control Modules: 371/372
Dilution Tunnel MW(dry): 29.00 lb/lb-mole
Dilution Tunnel MW(wet): 28.78 lb/lb-mole
Dilution Tunnel H2O: 2.00 percent
Dilution Tunnel Static: -0.170 "H2O
Tunnel Area: 0.19635 ft2
Pitot Tube Cp: 0.99

Avg. Tunnel Velocity: 13.33 ft/sec.
Initial Tunnel Flow: 140.2 scfm
Average Tunnel Flow: 141.5 scfm
Post-Test Leak Check (1): 0.000 cfm @ -16 in. Hg
Post-Test Leak Check (2): 0.000 cfm @ -17 in. Hg
Average Test Piece Fuel Moisture: 21.39 Dry Basis %

Technician Signature: _____

Velocity Traverse Data

	Pt.1	Pt.2	Pt.3	Pt.4	Pt.5	Pt.6	Pt.7	Pt.8	Center	
Initial dP	0.028	0.048	0.040	0.028	0.030	0.046	0.044	0.026	0.050	"H2O
Temp:	80	80	80	80	80	80	80	80	80	°F

V_{strav} 13.19 ft/sec V_{scent} 15.29 ft/sec F_p 0.863

	Particulate Sampling Data														Fuel Weight (lb)		Temperature Data (°F)													Stack Gas Data		
Elapsed Time (min)	Gas Meter 1 (ft^3)	Gas Meter 2 (ft^3)	Sample Rate 1 (cfm)	Sample Rate 2 (cfm)	Orifice dH 1 ("H_2O)	Meter 1 Temp (°F)	Meter 1 Vacuum ("Hg)	Orifice dH 2 ("H_2O)	Meter 2 Temp (°F)	Meter 2 Vacuum ("Hg)	Dilution Tunnel (°F)	Dilution Tunnel Center dP	Pro. Rate 1	Pro. Rate 2	Scale Reading	Weight Change	Firebox Top	Firebox Bottom	Firebox Back	Firebox Left	Firebox Right	Avg. Stove Surface	Catalyst Exit	Stack	Filter 1	Dryer Exit 1	Filter 2	Dryer Exit 2	Ambient	Draft ("H_2O)	CO_2 (%)	CO (%)
74	10.815	11.107	0.15	0.15	1.79	73	-1.29	1.39	73	-0.8	86	0.050	100	100	4.7	-0.1	773	428	313	479	451	489	1023	322	75	72	75	70	70	-0.060	9.35	0.34
75	10.962	11.257	0.15	0.15	1.78	73	-1.29	1.39	73	-0.8	86	0.050	100	100	4.6	-0.1	772	428	313	480	451	489	1019	321	75	72	75	70	70	-0.059	9.22	0.37
76	11.110	11.407	0.15	0.15	1.77	73	-1.28	1.38	73	-0.8	86	0.050	100	100	4.6	0	771	427	314	479	451	488	1015	321	75	72	75	70	70	-0.059	9.26	0.4
77	11.257	11.557	0.15	0.15	1.78	73	-1.29	1.38	73	-0.8	86	0.050	100	100	4.5	-0.1	770	427	314	481	451	489	1012	320	75	72	75	70	70	-0.056	9.16	0.41
78	11.404	11.707	0.15	0.15	1.78	73	-1.28	1.39	73	-0.8	86	0.050	100	100	4.4	-0.1	770	427	315	482	452	489	1012	319	75	72	74	70	70	-0.057	9.14	0.35
79	11.551	11.857	0.15	0.15	1.76	73	-1.28	1.38	73	-0.8	86	0.050	100	100	4.4	0	768	427	316	483	452	489	1011	318	75	72	75	70	70	-0.056	9.08	0.45
80	11.698	12.007	0.15	0.15	1.79	73	-1.28	1.38	73	-0.8	86	0.050	100	100	4.3	-0.1	768	426	316	482	452	489	1008	320	75	72	74	70	70	-0.056	9.18	0.57
81	11.845	12.159	0.15	0.15	1.77	73	-1.28	1.39	74	-0.8	86	0.050	100	101	4.2	-0.1	767	426	317	484	453	489	1003	318	75	72	74	70	70	-0.056	9.25	0.56
82	11.992	12.308	0.15	0.15	1.79	73	-1.29	1.39	74	-0.8	86	0.050	100	99	4.2	0	766	426	318	485	453	490	1002	316	75	72	75	70	71	-0.056	9.13	0.5
83	12.139	12.458	0.15	0.15	1.79	73	-1.28	1.38	74	-0.8	85	0.050	100	99	4.1	-0.1	765	426	319	484	454	490	1002	315	75	72	74	70	71	-0.056	8.99	0.46
84	12.287	12.608	0.15	0.15	1.79	73	-1.28	1.38	74	-0.8	86	0.050	100	99	4.0	-0.1	765	425	319	484	454	489	1002	314	75	72	74	70	70	-0.056	9.14	0.43
85	12.434	12.759	0.15	0.15	1.79	73	-1.29	1.39	74	-0.8	86	0.050	100	100	4.0	0	765	425	320	484	455	490	1001	315	75	72	75	71	71	-0.055	9.27	0.46
86	12.581	12.908	0.15	0.15	1.79	73	-1.29	1.38	74	-0.8	85	0.050	100	99	3.9	-0.1	764	425	321	483	455	490	1001	314	75	72	75	71	71	-0.055	9.25	0.45
87	12.728	13.059	0.15	0.15	1.79	73	-1.28	1.38	74	-0.8	86	0.050	100	100	3.8	-0.1	764	425	322	483	455	490	1001	317	75	72	75	71	71	-0.055	9.42	0.44
88	12.875	13.210	0.15	0.15	1.79	74	-1.28	1.39	74	-0.8	86	0.050	99	100	3.8	0	764	425	323	482	456	490	1006	315	75	72	75	71	71	-0.055	9.24	0.31
89	13.022	13.359	0.15	0.15	1.79	74	-1.29	1.39	74	-0.8	85	0.050	99	99	3.7	-0.1	765	425	325	480	457	490	1010	313	75	72	75	71	71	-0.055	9.29	0.19
90	13.170	13.510	0.15	0.15	1.78	74	-1.28	1.38	74	-0.8	85	0.050	100	100	3.7	0	766	425	326	479	457	491	1015	312	75	72	75	71	71	-0.055	9.12	0.11
91	13.317	13.660	0.15	0.15	1.77	74	-1.28	1.38	74	-0.8	85	0.050	99	99	3.6	-0.1	767	425	327	477	457	491	1019	312	75	72	75	71	71	-0.054	9.14	0.04
92	13.464	13.811	0.15	0.15	1.78	74	-1.28	1.39	74	-0.8	85	0.050	99	100	3.6	0	767	424	328	476	457	490	1021	306	75	72	75	71	71	-0.054	8.73	0.03
93	13.612	13.960	0.15	0.15	1.78	74	-1.28	1.38	74	-0.8	85	0.050	100	99	3.5	-0.1	767	424	329	475	457	490	1018	302	75	72	74	71	71	-0.055	8.74	0.04
94	13.759	14.111	0.15	0.15	1.78	74	-1.29	1.38	74	-0.8	84	0.050	99	100	3.5	0	766	424	331	474	457	490	1012	298	75	72	75	71	71	-0.054	8.49	0.04
95	13.906	14.262	0.15	0.15	1.78	74	-1.28	1.39	74	-0.8	84	0.050	99	100	3.4	-0.1	764	424	332	473	457	490	1008	295	75	72	75	71	71	-0.054	8.31	0.15
96	14.053	14.411	0.15	0.15	1.78	74	-1.28	1.39	74	-0.8	83	0.050	99	99	3.4	0	763	424	333	472	456	490	1006	293	74	72	75	71	71	-0.054	8.23	0.19
97	14.201	14.562	0.15	0.15	1.77	74	-1.29	1.38	74	-0.8	83	0.050	100	100	3.3	-0.1	761	423	333	470	455	488	1004	291	74	72	75	71	70	-0.054	8.16	0.21
98	14.348	14.712	0.15	0.15	1.77	73	-1.27	1.38	74	-0.8	83	0.050	99	99	3.3	0	759	423	334	469	454	488	1001	288	74	72	75	71	70	-0.053	8.19	0.27
99	14.495	14.863	0.15	0.15	1.78	73	-1.27	1.39	74	-0.8	82	0.050	99	100	3.3	0	757	423	335	468	453	487	996	284	74	72	75	71	70	-0.053	8.01	0.29
100	14.643	15.012	0.15	0.15	1.77	73	-1.27	1.39	74	-0.8	83	0.050	100	99	3.2	-0.1	755	422	336	466	452	486	992	281	74	72	75	71	70	-0.052	8.02	0.37
101	14.790	15.163	0.15	0.15	1.76	73	-1.27	1.38	74	-0.8	86	0.050	100	100	3.2	0	753	422	337	466	451	486	989	282	74	72	74	71	70	-0.052	8.53	0.11
102	14.937	15.314	0.15	0.15	1.78	73	-1.29	1.40	74	-0.8	88	0.050	100	100	3.1	-0.1	751	421	338	465	450	485	990	283	74	72	75	71	70	-0.051	8.7	0.12
103	15.085	15.464	0.15	0.15	1.77	73	-1.28	1.40	74	-0.8	88	0.050	100	100	3.1	0	749	421	339	464	449	484	991	285	74	72	75	71	71	-0.051	8.88	0.23
104	15.232	15.614	0.15	0.15	1.75	73	-1.28	1.39	74	-0.8	89	0.050	100	100	3.1	0	748	421	340	465	449	485	992	284	74	72	75	71	71	-0.052	8.89	0.44
105	15.379	15.764	0.15	0.15	1.75	73	-1.29	1.38	74	-0.8	89	0.050	100	100	3.0	-0.1	746	420	342	464	449	484	984	285	75	72	75	71	72	-0.051	8.83	0.55
106	15.526	15.915	0.15	0.15	1.75	73	-1.28	1.39	74	-0.8	88	0.050	100	100	3.0	0	744	420	343	462	448	483	986	283	75	72	75	71	72	-0.051	8.84	0.49
107	15.673	16.064	0.15	0.15	1.75	73	-1.28	1.39	74	-0.8	90	0.050	100	99	2.9	-0.1	743	419	344	462	448	483	990	281	75	72	75	71	72	-0.051	8.89	0.48
108	15.820	16.214	0.15	0.15	1.74	73	-1.28	1.38	74	-0.8	89	0.050	100	100	2.9	0	741	419	346	462	447	483	980	280	75	72	76	71	72	-0.051	8.85	0.26
109	15.967	16.365	0.15	0.15	1.74	73	-1.28	1.39	74	-0.8	88	0.050	100	100	2.8	-0.1	738	419	348	462	447	483	971	278	75	72	76	71	72	-0.051	8.71	0.18
110	16.115	16.515	0.15	0.15	1.75	73	-1.28	1.39	74	-0.8	88	0.050	100	100	2.8	0	735	418	349	461	448	482	964	275	75	72	76	71	72	-0.050	8.62	0.14

Wood Heater Test Data - ASTM E2780 / ASTM E2515

Run: 5

Manufacturer: Valley Comfort
Model: 20.2 Series
Tracking No.: 2253
Project No.: 0142WS013E
Test Date: 25-Aug-17
Beginning Clock Time: 09:32

Total Sampling Time: 227 min
Recording Interval: 1 min
Background Sample Volume: _____ cubic feet

Meter Box Y Factor: 1.003 (1) 0.997 (2) _____ (Amb)

Barometric Pressure:	Begin	Middle	End	Average
	28.76	28.75	28.74	28.75 "Hg

OMNI Equipment Numbers: 464,410,132,576,318,432,419,371,372,432,296-T55,567,413,592

PM Control Modules: 371/372
Dilution Tunnel MW(dry): 29.00 lb/lb-mole
Dilution Tunnel MW(wet): 28.78 lb/lb-mole
Dilution Tunnel H2O: 2.00 percent
Dilution Tunnel Static: -0.170 "H2O
Tunnel Area: 0.19635 ft2
Pitot Tube Cp: 0.99

Avg. Tunnel Velocity: 13.33 ft/sec.
Initial Tunnel Flow: 140.2 scfm
Average Tunnel Flow: 141.5 scfm
Post-Test Leak Check (1): 0.000 cfm @ -16 in. Hg
Post-Test Leak Check (2): 0.000 cfm @ -17 in. Hg
Average Test Piece Fuel Moisture: 21.39 Dry Basis %

Technician Signature: _____

Velocity Traverse Data

	Pt.1	Pt.2	Pt.3	Pt.4	Pt.5	Pt.6	Pt.7	Pt.8	Center	
Initial dP	0.028	0.048	0.040	0.028	0.030	0.046	0.044	0.026	0.050	"H2O
Temp:	80	80	80	80	80	80	80	80	80	°F

V_{strav} 13.19 ft/sec V_{scent} 15.29 ft/sec F_p 0.863

	Particulate Sampling Data														Fuel Weight (lb)		Temperature Data (°F)													Stack Gas Data		
Elapsed Time (min)	Gas Meter 1 (ft^3)	Gas Meter 2 (ft^3)	Sample Rate 1 (cfm)	Sample Rate 2 (cfm)	Orifice dH 1 ("H_2O)	Meter 1 Temp (°F)	Meter 1 Vacuum ("Hg)	Orifice dH 2 ("H_2O)	Meter 2 Temp (°F)	Meter 2 Vacuum ("Hg)	Dilution Tunnel (°F)	Dilution Tunnel Center dP	Pro. Rate 1	Pro. Rate 2	Scale Reading	Weight Change	Firebox Top	Firebox Bottom	Firebox Back	Firebox Left	Firebox Right	Avg. Stove Surface	Catalyst Exit	Stack	Filter 1	Dryer Exit 1	Filter 2	Dryer Exit 2	Ambient	Draft ("H_2O)	CO_2 (%)	CO (%)
111	16.262	16.665	0.15	0.15	1.74	73	-1.29	1.37	74	-0.8	89	0.050	100	100	2.8	0	732	418	350	460	448	482	945	270	75	72	76	71	72	-0.051	8.18	0.15
112	16.409	16.815	0.15	0.15	1.74	73	-1.28	1.38	74	-0.8	89	0.050	100	100	2.7	-0.1	728	417	351	457	448	480	932	268	76	72	76	71	72	-0.050	7.97	0.06
113	16.556	16.966	0.15	0.15	1.74	73	-1.28	1.38	74	-0.8	88	0.050	100	100	2.7	0	724	417	351	456	448	479	925	264	76	72	76	71	73	-0.050	7.93	0.03
114	16.703	17.115	0.15	0.15	1.74	73	-1.28	1.38	74	-0.8	88	0.050	100	99	2.6	-0.1	721	416	351	453	447	478	921	263	76	72	76	71	73	-0.049	7.88	0.02
115	16.850	17.265	0.15	0.15	1.74	73	-1.28	1.38	74	-0.8	88	0.050	100	100	2.6	0	718	416	350	450	446	476	918	261	76	72	77	71	73	-0.049	7.79	-0.01
116	16.998	17.416	0.15	0.15	1.74	73	-1.28	1.39	74	-0.8	87	0.050	100	100	2.6	0	716	415	349	448	445	475	915	257	76	72	77	71	73	-0.048	7.73	-0.02
117	17.145	17.566	0.15	0.15	1.74	73	-1.28	1.39	74	-0.8	88	0.050	100	100	2.6	0	713	414	348	446	444	473	911	256	76	72	77	71	73	-0.048	7.68	-0.02
118	17.292	17.715	0.15	0.15	1.75	73	-1.28	1.37	74	-0.8	88	0.050	100	99	2.5	-0.1	710	414	347	443	443	471	909	255	76	72	77	71	73	-0.048	7.54	-0.02
119	17.439	17.866	0.15	0.15	1.76	73	-1.28	1.38	74	-0.8	88	0.050	100	100	2.5	0	708	413	346	442	442	470	910	255	76	72	77	71	73	-0.047	7.76	-0.02
120	17.586	18.017	0.15	0.15	1.74	73	-1.28	1.38	74	-0.8	88	0.050	100	100	2.5	0	705	412	345	439	441	468	910	253	77	72	77	71	73	-0.047	7.58	-0.02
121	17.733	18.166	0.15	0.15	1.75	73	-1.28	1.38	74	-0.8	87	0.050	100	99	2.4	-0.1	703	412	344	437	439	467	908	251	77	72	77	71	73	-0.047	7.51	-0.02
122	17.881	18.316	0.15	0.15	1.77	73	-1.28	1.38	74	-0.8	88	0.050	100	100	2.4	0	701	411	342	436	438	466	906	252	77	72	77	71	73	-0.047	7.64	-0.02
123	18.028	18.466	0.15	0.15	1.74	73	-1.28	1.37	74	-0.8	88	0.050	100	100	2.4	0	698	410	341	435	437	464	906	253	77	72	77	71	73	-0.047	7.58	-0.02
124	18.175	18.616	0.15	0.15	1.76	73	-1.28	1.38	74	-0.8	88	0.050	100	100	2.3	-0.1	696	410	339	433	436	463	906	254	77	72	77	71	73	-0.047	7.45	-0.02
125	18.322	18.766	0.15	0.15	1.77	73	-1.28	1.38	74	-0.8	87	0.050	100	100	2.3	0	694	409	338	431	434	461	907	257	77	72	77	71	73	-0.048	7.49	-0.02
126	18.469	18.916	0.15	0.15	1.79	73	-1.28	1.37	74	-0.8	89	0.050	100	100	2.3	0	692	409	336	429	433	460	909	260	77	72	78	71	73	-0.048	7.42	-0.02
127	18.616	19.067	0.15	0.15	1.77	73	-1.29	1.39	74	-0.8	88	0.050	100	100	2.3	0	690	409	335	429	432	459	912	265	77	72	78	71	73	-0.048	7.47	-0.02
128	18.763	19.216	0.15	0.15	1.79	73	-1.28	1.38	74	-0.8	89	0.050	100	99	2.2	-0.1	689	408	333	428	431	458	914	266	77	72	78	71	73	-0.048	7.51	-0.02
129	18.911	19.366	0.15	0.15	1.78	73	-1.29	1.37	74	-0.8	89	0.050	101	100	2.2	0	688	408	332	427	430	457	912	270	77	72	78	72	73	-0.048	7.16	-0.02
130	19.058	19.516	0.15	0.15	1.77	73	-1.28	1.38	74	-0.8	89	0.050	100	100	2.2	0	686	408	330	426	429	456	903	273	77	72	78	72	74	-0.049	7.03	-0.02
131	19.205	19.667	0.15	0.15	1.78	73	-1.28	1.39	74	-0.8	89	0.050	100	100	2.2	0	683	408	329	425	428	455	893	279	77	72	78	72	73	-0.049	6.83	-0.02
132	19.352	19.817	0.15	0.15	1.78	73	-1.29	1.38	75	-0.8	89	0.050	100	100	2.1	-0.1	680	408	327	425	428	454	885	282	77	72	78	72	73	-0.050	6.71	-0.02
133	19.499	19.966	0.15	0.15	1.79	73	-1.29	1.38	75	-0.8	90	0.050	100	99	2.1	0	677	407	326	426	427	453	878	288	77	72	78	72	73	-0.049	6.66	-0.02
134	19.647	20.117	0.15	0.15	1.78	73	-1.28	1.38	75	-0.8	89	0.050	101	100	2.1	0	673	407	325	425	426	451	870	289	77	72	78	72	73	-0.049	6.55	-0.02
135	19.794	20.267	0.15	0.15	1.78	73	-1.28	1.38	75	-0.8	90	0.050	100	100	2.1	0	670	407	323	424	426	450	864	294	77	72	78	72	74	-0.050	6.43	-0.02
136	19.941	20.417	0.15	0.15	1.77	73	-1.29	1.37	75	-0.8	90	0.050	100	100	2.1	0	667	407	322	425	425	449	858	296	77	73	78	72	74	-0.051	6.55	-0.02
137	20.088	20.567	0.15	0.15	1.78	73	-1.28	1.37	75	-0.8	89	0.050	100	100	2.0	-0.1	663	407	321	425	425	448	852	299	77	73	78	72	74	-0.051	6.5	-0.02
138	20.236	20.718	0.15	0.15	1.78	73	-1.28	1.39	75	-0.8	91	0.050	101	100	2.0	0	659	407	320	425	424	447	846	304	77	73	78	72	74	-0.051	6.54	-0.02
139	20.383	20.867	0.15	0.15	1.77	73	-1.28	1.38	75	-0.8	90	0.050	100	99	2.0	0	656	408	319	426	424	447	841	303	77	73	78	72	74	-0.051	6.34	-0.02
140	20.530	21.017	0.15	0.15	1.78	73	-1.28	1.37	75	-0.8	90	0.050	100	100	2.0	0	653	408	318	427	424	446	836	305	77	73	78	72	74	-0.051	6.33	-0.03
141	20.677	21.167	0.15	0.15	1.77	73	-1.29	1.38	75	-0.8	90	0.050	100	100	2.0	0	649	409	317	427	424	445	831	308	78	73	78	72	74	-0.051	6.2	-0.03
142	20.824	21.317	0.15	0.15	1.76	73	-1.29	1.38	75	-0.8	91	0.050	100	100	1.9	-0.1	646	409	316	427	424	444	826	310	78	73	78	72	74	-0.053	6.15	-0.03
143	20.971	21.467	0.15	0.15	1.78	73	-1.28	1.38	75	-0.8	91	0.050	100	100	1.9	0	643	410	316	429	424	444	824	313	78	73	78	72	74	-0.052	6.24	-0.03
144	21.118	21.617	0.15	0.15	1.77	73	-1.29	1.37	75	-0.8	92	0.050	100	100	1.9	0	640	410	315	430	425	444	822	315	78	73	78	72	74	-0.052	6.1	-0.03
145	21.265	21.768	0.15	0.15	1.77	73	-1.28	1.38	75	-0.8	91	0.050	100	100	1.9	0	637	411	315	430	425	444	821	319	78	73	78	72	74	-0.052	6.12	-0.03
146	21.413	21.917	0.15	0.15	1.79	73	-1.28	1.38	75	-0.8	91	0.050	101	99	1.8	-0.1	634	412	315	431	425	443	821	322	78	73	78	72	74	-0.053	6.01	-0.03
147	21.560	22.067	0.15	0.15	1.76	73	-1.28	1.37	75	-0.8	92	0.050	100	100	1.8	0	632	412	315	431	426	443	822	322	78	73	79	72	74	-0.053	6.08	-0.03

Wood Heater Test Data - ASTM E2780 / ASTM E2515

Run: 5

Manufacturer: Valley Comfort
Model: 20.2 Series
Tracking No.: 2253
Project No.: 0142WS013E
Test Date: 25-Aug-17
Beginning Clock Time: 09:32

Total Sampling Time: 227 min
Recording Interval: 1 min
Background Sample Volume: _____ cubic feet

Meter Box Y Factor: 1.003 (1) 0.997 (2) _____ (Amb)

Barometric Pressure:	Begin	Middle	End	Average
	28.76	28.75	28.74	28.75 "Hg

OMNI Equipment Numbers: 464,410,132,576,318,432,419,371,372,432,296-T55,567,413,592

PM Control Modules: 371/372
Dilution Tunnel MW(dry): 29.00 lb/lb-mole
Dilution Tunnel MW(wet): 28.78 lb/lb-mole
Dilution Tunnel H2O: 2.00 percent
Dilution Tunnel Static: -0.170 "H2O
Tunnel Area: 0.19635 ft2
Pitot Tube Cp: 0.99

Avg. Tunnel Velocity: 13.33 ft/sec.
Initial Tunnel Flow: 140.2 scfm
Average Tunnel Flow: 141.5 scfm
Post-Test Leak Check (1): 0.000 cfm @ -16 in. Hg
Post-Test Leak Check (2): 0.000 cfm @ -17 in. Hg
Average Test Piece Fuel Moisture: 21.39 Dry Basis %

Technician Signature: _____

Velocity Traverse Data

	Pt.1	Pt.2	Pt.3	Pt.4	Pt.5	Pt.6	Pt.7	Pt.8	Center	
Initial dP	0.028	0.048	0.040	0.028	0.030	0.046	0.044	0.026	0.050	"H2O
Temp:	80	80	80	80	80	80	80	80	80	°F

V_{strav} 13.19 ft/sec V_{scent} 15.29 ft/sec F_p 0.863

	Particulate Sampling Data														Fuel Weight (lb)		Temperature Data (°F)													Stack Gas Data		
Elapsed Time (min)	Gas Meter 1 (ft^3)	Gas Meter 2 (ft^3)	Sample Rate 1 (cfm)	Sample Rate 2 (cfm)	Orifice dH 1 ("H_2O)	Meter 1 Temp (°F)	Meter 1 Vacuum ("Hg)	Orifice dH 2 ("H_2O)	Meter 2 Temp (°F)	Meter 2 Vacuum ("Hg)	Dilution Tunnel (°F)	Dilution Tunnel Center dP	Pro. Rate 1	Pro. Rate 2	Scale Reading	Weight Change	Firebox Top	Firebox Bottom	Firebox Back	Firebox Left	Firebox Right	Avg. Stove Surface	Catalyst Exit	Stack	Filter 1	Dryer Exit 1	Filter 2	Dryer Exit 2	Ambient	Draft ("H_2O)	CO_2 (%)	CO (%)
148	21.707	22.217	0.15	0.15	1.78	73	-1.28	1.36	75	-0.8	93	0.050	100	100	1.8	0	630	413	314	432	426	443	820	324	78	73	78	72	74	-0.053	5.87	-0.03
149	21.854	22.368	0.15	0.15	1.78	73	-1.28	1.38	75	-0.8	92	0.050	100	100	1.8	0	628	414	314	433	426	443	819	327	78	73	79	72	74	-0.053	5.77	-0.03
150	22.001	22.517	0.15	0.15	1.78	73	-1.29	1.37	75	-0.8	93	0.050	100	99	1.8	0	626	414	314	434	426	443	818	327	78	73	79	72	74	-0.054	5.9	-0.03
151	22.149	22.668	0.15	0.15	1.79	73	-1.29	1.37	75	-0.8	93	0.050	101	101	1.7	-0.1	625	415	314	434	426	443	818	328	78	73	79	72	74	-0.053	5.89	-0.03
152	22.296	22.818	0.15	0.15	1.78	74	-1.29	1.37	75	-0.8	93	0.050	100	100	1.7	0	622	416	314	434	426	442	817	329	78	73	79	72	74	-0.054	5.89	-0.03
153	22.443	22.968	0.15	0.15	1.78	74	-1.28	1.38	75	-0.8	93	0.050	100	100	1.7	0	621	417	314	435	427	443	816	330	78	73	79	72	74	-0.054	5.91	-0.02
154	22.590	23.118	0.15	0.15	1.78	74	-1.29	1.37	75	-0.8	94	0.050	100	100	1.7	0	620	418	314	435	427	443	816	331	78	73	79	72	74	-0.054	5.98	-0.03
155	22.737	23.268	0.15	0.15	1.78	74	-1.28	1.37	75	-0.8	93	0.050	100	100	1.6	-0.1	618	418	315	435	427	443	818	332	78	73	79	72	74	-0.055	5.95	-0.03
156	22.885	23.419	0.15	0.15	1.77	74	-1.28	1.38	75	-0.8	93	0.050	101	101	1.6	0	617	419	315	435	428	443	818	334	78	73	79	72	74	-0.055	5.99	-0.03
157	23.032	23.568	0.15	0.15	1.77	74	-1.28	1.38	75	-0.8	94	0.050	100	99	1.6	0	616	420	316	436	429	443	815	334	78	73	79	72	74	-0.054	5.94	-0.03
158	23.179	23.718	0.15	0.15	1.77	74	-1.28	1.37	75	-0.8	93	0.050	100	100	1.6	0	615	421	317	436	429	444	812	334	78	73	79	72	74	-0.058	6.01	-0.03
159	23.326	23.868	0.15	0.15	1.76	74	-1.28	1.38	75	-0.8	94	0.050	100	100	1.6	0	614	421	318	436	430	444	810	333	78	73	79	72	74	-0.059	6.03	-0.03
160	23.474	24.019	0.15	0.15	1.77	74	-1.29	1.38	75	-0.8	94	0.050	101	101	1.5	-0.1	612	422	319	436	430	444	809	333	78	73	79	72	75	-0.058	6	-0.03
161	23.621	24.168	0.15	0.15	1.77	74	-1.29	1.38	75	-0.8	93	0.050	100	99	1.5	0	611	422	321	436	430	444	808	333	78	73	79	72	75	-0.058	6.02	-0.03
162	23.768	24.318	0.15	0.15	1.77	74	-1.28	1.38	75	-0.8	94	0.050	100	100	1.5	0	610	422	322	437	431	444	808	333	79	73	79	72	75	-0.058	6.03	-0.03
163	23.915	24.469	0.15	0.15	1.76	74	-1.28	1.39	75	-0.8	94	0.050	100	101	1.5	0	609	423	324	437	431	445	809	334	79	73	79	72	75	-0.058	6.12	-0.03
164	24.062	24.618	0.15	0.15	1.76	74	-1.28	1.39	75	-0.8	94	0.050	100	99	1.4	-0.1	608	423	325	438	431	445	809	333	79	73	79	72	75	-0.058	6.11	-0.03
165	24.209	24.769	0.15	0.15	1.77	74	-1.29	1.38	75	-0.8	94	0.050	100	101	1.4	0	607	423	327	438	432	445	809	333	79	73	79	72	75	-0.057	6.1	-0.03
166	24.357	24.919	0.15	0.15	1.76	74	-1.28	1.37	75	-0.8	94	0.050	101	100	1.4	0	606	423	328	439	432	446	808	334	79	73	79	72	75	-0.058	6.06	-0.03
167	24.504	25.070	0.15	0.15	1.75	74	-1.28	1.38	75	-0.8	94	0.050	100	101	1.4	0	605	423	329	438	433	446	807	333	79	73	79	72	75	-0.058	6.15	-0.03
168	24.651	25.219	0.15	0.15	1.76	74	-1.29	1.38	75	-0.8	95	0.050	100	99	1.3	-0.1	604	423	330	439	433	446	808	333	79	73	80	72	75	-0.058	6.1	-0.03
169	24.798	25.369	0.15	0.15	1.76	74	-1.28	1.37	75	-0.8	94	0.050	100	100	1.3	0	604	424	331	439	434	446	808	333	79	73	80	72	75	-0.058	6.15	-0.03
170	24.945	25.519	0.15	0.15	1.74	74	-1.29	1.38	76	-0.8	94	0.050	100	100	1.3	0	604	424	332	440	434	447	808	332	79	73	80	72	75	-0.058	6.13	-0.03
171	25.092	25.669	0.15	0.15	1.74	74	-1.28	1.39	75	-0.8	94	0.050	100	100	1.3	0	603	424	333	440	435	447	808	331	79	73	80	72	75	-0.058	6.02	-0.03
172	25.239	25.819	0.15	0.15	1.75	74	-1.27	1.38	75	-0.8	94	0.050	100	100	1.3	0	603	424	334	440	435	447	807	334	79	73	80	72	75	-0.058	5.92	-0.03
173	25.387	25.969	0.15	0.15	1.74	74	-1.28	1.36	75	-0.8	94	0.050	101	100	1.2	-0.1	603	424	336	441	436	448	807	333	79	73	80	72	75	-0.058	5.98	-0.03
174	25.534	26.120	0.15	0.15	1.74	74	-1.28	1.38	75	-0.8	95	0.050	100	101	1.2	0	602	423	337	440	436	448	806	334	79	73	80	72	75	-0.058	5.94	-0.03
175	25.681	26.269	0.15	0.15	1.74	74	-1.28	1.38	75	-0.8	95	0.050	100	99	1.2	0	601	423	338	441	437	448	805	333	79	73	80	72	75	-0.058	6.05	-0.03
176	25.828	26.419	0.15	0.15	1.74	74	-1.28	1.37	76	-0.8	95	0.050	100	100	1.2	0	601	423	339	440	437	448	805	335	79	73	80	72	75	-0.058	5.99	-0.03
177	25.976	26.569	0.15	0.15	1.73	74	-1.28	1.37	76	-0.8	95	0.050	101	100	1.1	-0.1	601	423	341	442	438	449	803	334	79	73	80	72	75	-0.058	6.08	-0.03
178	26.123	26.720	0.15	0.15	1.74	74	-1.28	1.38	76	-0.8	95	0.050	100	101	1.1	0	600	423	342	442	438	449	802	333	79	73	80	72	75	-0.058	6.02	-0.03
179	26.271	26.869	0.15	0.15	1.73	74	-1.28	1.38	76	-0.8	94	0.050	101	99	1.1	0	599	423	343	442	438	449	800	333	79	73	80	72	75	-0.058	6.02	-0.03
180	26.418	27.019	0.15	0.15	1.74	74	-1.28	1.37	76	-0.8	96	0.050	100	100	1.1	0	599	423	344	442	439	449	800	333	79	73	80	72	75	-0.059	6.08	-0.03
181	26.565	27.170	0.15	0.15	1.75	74	-1.28	1.38	76	-0.8	95	0.050	100	101	1.1	0	598	423	345	442	439	449	799	332	79	73	80	72	75	-0.058	6.03	-0.03
182	26.713	27.319	0.15	0.15	1.73	74	-1.28	1.38	76	-0.8	95	0.050	101	99	1.0	-0.1	598	423	347	442	440	450	799	332	79	73	80	72	75	-0.058	6.12	-0.03
183	26.860	27.469	0.15	0.15	1.74	74	-1.28	1.38	76	-0.8	95	0.050	100	100	1.0	0	598	423	348	442	440	450	798	332	79	73	80	72	75	-0.058	5.89	-0.03
184	27.008	27.619	0.15	0.15	1.75	74	-1.28	1.36	76	-0.8	95	0.050	101	100	1.0	0	597	423	349	442	440	450	796	332	80	73	80	72	75	-0.058	5.78	-0.03

Wood Heater Test Data - ASTM E2780 / ASTM E2515

Run: 5

Manufacturer: Valley Comfort
Model: 20.2 Series
Tracking No.: 2253
Project No.: 0142WS013E
Test Date: 25-Aug-17
Beginning Clock Time: 09:32

Total Sampling Time: 227 min
Recording Interval: 1 min
Background Sample Volume: _____ cubic feet

Meter Box Y Factor: 1.003 (1) 0.997 (2) _____ (Amb)

Barometric Pressure:	Begin	Middle	End	Average
	28.76	28.75	28.74	28.75 "Hg

OMNI Equipment Numbers: 464,410,132,576,318,432,419,371,372,432,296-T55,567,413,592

PM Control Modules: 371/372
Dilution Tunnel MW(dry): 29.00 lb/lb-mole
Dilution Tunnel MW(wet): 28.78 lb/lb-mole
Dilution Tunnel H2O: 2.00 percent
Dilution Tunnel Static: -0.170 "H2O
Tunnel Area: 0.19635 ft2
Pitot Tube Cp: 0.99

Avg. Tunnel Velocity: 13.33 ft/sec.
Initial Tunnel Flow: 140.2 scfm
Average Tunnel Flow: 141.5 scfm
Post-Test Leak Check (1): 0.000 cfm @ -16 in. Hg
Post-Test Leak Check (2): 0.000 cfm @ -17 in. Hg
Average Test Piece Fuel Moisture: 21.39 Dry Basis %

Technician Signature: _____

Velocity Traverse Data

	Pt.1	Pt.2	Pt.3	Pt.4	Pt.5	Pt.6	Pt.7	Pt.8	Center	
Initial dP	0.028	0.048	0.040	0.028	0.030	0.046	0.044	0.026	0.050	"H2O
Temp:	80	80	80	80	80	80	80	80	80	°F

V_{strav} 13.19 ft/sec V_{scent} 15.29 ft/sec F_p 0.863

	Particulate Sampling Data														Fuel Weight (lb)		Temperature Data (°F)													Stack Gas Data		
Elapsed Time (min)	Gas Meter 1 (ft^3)	Gas Meter 2 (ft^3)	Sample Rate 1 (cfm)	Sample Rate 2 (cfm)	Orifice dH 1 ("H_2O)	Meter 1 Temp (°F)	Meter 1 Vacuum ("Hg)	Orifice dH 2 ("H_2O)	Meter 2 Temp (°F)	Meter 2 Vacuum ("Hg)	Dilution Tunnel (°F)	Dilution Tunnel Center dP	Pro. Rate 1	Pro. Rate 2	Scale Reading	Weight Change	Firebox Top	Firebox Bottom	Firebox Back	Firebox Left	Firebox Right	Avg. Stove Surface	Catalyst Exit	Stack	Filter 1	Dryer Exit 1	Filter 2	Dryer Exit 2	Ambient	Draft ("H_2O)	CO_2 (%)	CO (%)
185	27.155	27.770	0.15	0.15	1.78	74	-1.29	1.37	76	-0.8	95	0.050	100	101	0.9	-0.1	596	423	350	443	441	451	796	331	80	73	80	72	75	-0.058	6.09	-0.03
186	27.302	27.919	0.15	0.15	1.75	74	-1.28	1.37	76	-0.8	95	0.050	100	99	0.9	0	596	423	351	442	441	451	797	330	80	73	80	72	75	-0.058	6.02	-0.03
187	27.449	28.069	0.15	0.15	1.77	74	-1.29	1.37	76	-0.8	95	0.050	100	100	0.9	0	595	423	352	442	442	451	796	332	80	73	80	72	75	-0.058	6.04	-0.03
188	27.597	28.220	0.15	0.15	1.77	74	-1.29	1.38	76	-0.8	94	0.050	101	100	0.9	0	595	424	353	443	442	451	795	330	80	73	80	72	75	-0.058	6.06	-0.03
189	27.744	28.370	0.15	0.15	1.76	74	-1.28	1.38	76	-0.8	95	0.050	100	100	0.8	-0.1	594	424	354	443	443	452	794	330	80	73	80	72	76	-0.058	6.11	-0.03
190	27.891	28.519	0.15	0.15	1.78	75	-1.28	1.38	76	-0.8	95	0.050	100	99	0.8	0	594	425	356	443	444	452	793	330	80	73	80	72	76	-0.057	6.15	-0.03
191	28.038	28.669	0.15	0.15	1.77	75	-1.28	1.37	76	-0.8	95	0.050	100	100	0.8	0	593	425	357	443	444	452	793	330	80	73	80	73	76	-0.058	6.22	-0.03
192	28.186	28.820	0.15	0.15	1.77	74	-1.28	1.39	76	-0.8	95	0.050	101	101	0.8	0	593	426	357	443	445	453	794	330	80	73	80	72	76	-0.057	6.2	-0.03
193	28.333	28.969	0.15	0.15	1.78	75	-1.28	1.38	76	-0.8	95	0.050	100	99	0.8	0	593	427	359	443	445	453	795	330	80	73	80	73	76	-0.057	6.12	-0.03
194	28.480	29.120	0.15	0.15	1.78	75	-1.29	1.37	76	-0.8	95	0.050	100	101	0.7	-0.1	593	428	360	444	445	454	794	329	80	73	80	73	76	-0.057	6.13	-0.03
195	28.628	29.270	0.15	0.15	1.77	75	-1.29	1.36	76	-0.8	95	0.050	101	100	0.7	0	592	428	361	444	446	454	794	331	80	73	80	73	76	-0.057	6.08	-0.03
196	28.775	29.420	0.15	0.15	1.77	75	-1.29	1.37	76	-0.8	95	0.050	100	100	0.7	0	592	429	362	445	446	455	793	330	80	73	80	72	75	-0.057	6.06	-0.03
197	28.922	29.569	0.15	0.15	1.77	75	-1.29	1.37	76	-0.8	95	0.050	100	99	0.7	0	592	429	363	445	446	455	792	332	80	73	80	72	76	-0.057	5.97	-0.03
198	29.069	29.719	0.15	0.15	1.76	75	-1.28	1.37	76	-0.8	95	0.050	100	100	0.7	0	591	430	364	445	446	455	792	332	80	73	80	72	75	-0.058	6.03	-0.03
199	29.217	29.870	0.15	0.15	1.77	75	-1.28	1.38	76	-0.8	95	0.050	101	101	0.6	-0.1	591	430	365	444	446	455	792	330	80	73	80	73	75	-0.057	5.95	-0.03
200	29.364	30.020	0.15	0.15	1.76	75	-1.29	1.38	76	-0.8	95	0.050	100	100	0.6	0	591	430	366	444	446	455	793	332	80	73	80	73	76	-0.057	5.94	-0.03
201	29.511	30.169	0.15	0.15	1.77	75	-1.29	1.38	77	-0.8	94	0.050	100	99	0.6	0	591	431	366	444	446	456	792	330	80	73	80	73	75	-0.057	5.94	-0.03
202	29.658	30.319	0.15	0.15	1.78	75	-1.29	1.37	77	-0.8	94	0.050	100	100	0.6	0	590	431	368	444	446	456	793	331	80	73	80	73	76	-0.057	5.79	-0.03
203	29.806	30.470	0.15	0.15	1.76	75	-1.29	1.38	77	-0.8	95	0.050	101	100	0.5	-0.1	590	431	368	443	446	456	793	331	80	73	80	73	75	-0.057	5.82	-0.03
204	29.953	30.619	0.15	0.15	1.77	75	-1.28	1.37	77	-0.8	95	0.050	100	99	0.5	0	590	431	370	443	445	456	793	330	80	73	80	73	76	-0.057	5.81	-0.03
205	30.100	30.770	0.15	0.15	1.78	75	-1.29	1.37	77	-0.8	95	0.050	100	100	0.5	0	590	431	371	443	445	456	793	332	80	73	80	73	76	-0.057	5.77	-0.03
206	30.247	30.919	0.15	0.15	1.77	75	-1.29	1.37	77	-0.8	96	0.050	100	99	0.5	0	590	431	372	442	444	456	793	332	80	73	80	73	76	-0.057	5.75	-0.03
207	30.395	31.070	0.15	0.15	1.78	75	-1.29	1.38	77	-0.8	95	0.050	101	100	0.5	0	590	431	373	442	444	456	793	330	80	73	80	73	76	-0.057	5.71	-0.03
208	30.542	31.219	0.15	0.15	1.78	75	-1.28	1.38	77	-0.8	95	0.050	100	99	0.5	0	590	431	374	441	443	456	792	332	80	73	80	73	76	-0.057	5.64	-0.03
209	30.689	31.370	0.15	0.15	1.77	75	-1.28	1.37	77	-0.8	95	0.050	100	100	0.4	-0.1	589	431	375	441	442	456	791	331	80	73	80	73	76	-0.057	5.67	-0.03
210	30.837	31.520	0.15	0.15	1.77	75	-1.28	1.37	77	-0.8	95	0.050	101	100	0.4	0	589	431	376	441	442	456	791	331	80	73	80	73	76	-0.057	5.66	-0.03
211	30.984	31.670	0.15	0.15	1.77	75	-1.29	1.37	77	-0.8	96	0.050	100	100	0.4	0	589	430	377	440	441	455	790	330	80	73	80	73	76	-0.058	5.68	-0.03
212	31.132	31.820	0.15	0.15	1.77	75	-1.29	1.36	77	-0.8	95	0.050	101	100	0.4	0	589	430	378	439	440	455	791	330	80	73	81	73	75	-0.058	5.68	-0.03
213	31.279	31.970	0.15	0.15	1.76	75	-1.29	1.36	77	-0.8	96	0.050	100	100	0.3	-0.1	589	429	378	438	440	455	793	330	80	73	81	73	76	-0.057	5.81	-0.03
214	31.426	32.121	0.15	0.15	1.76	75	-1.28	1.38	77	-0.8	95	0.050	100	100	0.3	0	589	429	379	438	439	455	793	329	80	73	81	73	76	-0.057	5.77	-0.03
215	31.574	32.270	0.15	0.15	1.76	75	-1.28	1.38	77	-0.8	95	0.050	101	99	0.3	0	588	428	380	438	439	455	793	329	80	73	81	73	76	-0.058	5.77	-0.03
216	31.721	32.420	0.15	0.15	1.76	75	-1.28	1.37	77	-0.8	96	0.050	100	100	0.3	0	588	427	380	437	439	454	794	329	80	73	81	73	76	-0.058	5.76	-0.03
217	31.868	32.570	0.15	0.15	1.76	75	-1.28	1.37	77	-0.8	95	0.050	100	100	0.3	0	588	427	380	436	438	454	796	330	80	73	81	73	76	-0.058	5.71	-0.03
218	32.016	32.721	0.15	0.15	1.76	75	-1.28	1.38	77	-0.8	95	0.050	101	100	0.3	0	588	426	381	436	437	454	797	329	80	73	81	73	76	-0.058	5.75	-0.03
219	32.163	32.870	0.15	0.15	1.75	75	-1.28	1.37	77	-0.8	95	0.050	100	99	0.2	-0.1	588	426	381	435	437	453	798	329	80	73	81	73	76	-0.057	5.82	-0.03
220	32.310	33.020	0.15	0.15	1.74	75	-1.28	1.37	77	-0.8	95	0.050	100	100	0.2	0	588	425	381	434	437	453	799	329	80	73	81	73	76	-0.057	5.94	-0.03
221	32.457	33.171	0.15	0.15	1.75	76	-1.28	1.38	77	-0.8	95	0.050	100	100	0.2	0	588	424	382	435	436	453	800	328	80	73	81	73	76	-0.057	5.94	-0.03

Wood Heater Test Data - ASTM E2780 / ASTM E2515

Run: 5

Manufacturer: Valley Comfort
Model: 20.2 Series
Tracking No.: 2253
Project No.: 0142WS013E
Test Date: 25-Aug-17
Beginning Clock Time: 09:32

Total Sampling Time: 227 min
Recording Interval: 1 min
Background Sample Volume: _____ cubic feet

Meter Box Y Factor: 1.003 (1) 0.997 (2) _____ (Amb)

Barometric Pressure:	Begin	Middle	End	Average
	28.76	28.75	28.74	28.75 "Hg

OMNI Equipment Numbers: 464,410,132,576,318,432,419,371,372,432,296-T55,567,413,592

PM Control Modules: 371/372
Dilution Tunnel MW(dry): 29.00 lb/lb-mole
Dilution Tunnel MW(wet): 28.78 lb/lb-mole
Dilution Tunnel H2O: 2.00 percent
Dilution Tunnel Static: -0.170 "H2O
Tunnel Area: 0.19635 ft2
Pitot Tube Cp: 0.99

Avg. Tunnel Velocity: 13.33 ft/sec.
Initial Tunnel Flow: 140.2 scfm
Average Tunnel Flow: 141.5 scfm
Post-Test Leak Check (1): 0.000 cfm @ -16 in. Hg
Post-Test Leak Check (2): 0.000 cfm @ -17 in. Hg
Average Test Piece Fuel Moisture: 21.39 Dry Basis %

Technician Signature: _____

Velocity Traverse Data

	Pt.1	Pt.2	Pt.3	Pt.4	Pt.5	Pt.6	Pt.7	Pt.8	Center	
Initial dP	0.028	0.048	0.040	0.028	0.030	0.046	0.044	0.026	0.050	"H2O
Temp:	80	80	80	80	80	80	80	80	80	°F

V_{strav} 13.19 ft/sec V_{scent} 15.29 ft/sec F_p 0.863

	Particulate Sampling Data														Fuel Weight (lb)		Temperature Data (°F)													Stack Gas Data		
Elapsed Time (min)	Gas Meter 1 (ft^3)	Gas Meter 2 (ft^3)	Sample Rate 1 (cfm)	Sample Rate 2 (cfm)	Orifice dH 1 ("H_2O)	Meter 1 Temp (°F)	Meter 1 Vacuum ("Hg)	Orifice dH 2 ("H_2O)	Meter 2 Temp (°F)	Meter 2 Vacuum ("Hg)	Dilution Tunnel (°F)	Dilution Tunnel Center dP	Pro. Rate 1	Pro. Rate 2	Scale Reading	Weight Change	Firebox Top	Firebox Bottom	Firebox Back	Firebox Left	Firebox Right	Avg. Stove Surface	Catalyst Exit	Stack	Filter 1	Dryer Exit 1	Filter 2	Dryer Exit 2	Ambient	Draft ("H_2O)	CO_2 (%)	CO (%)
222	32.605	33.321	0.15	0.15	1.74	76	-1.28	1.38	77	-0.8	95	0.050	101	100	0.2	0	588	424	382	433	436	453	800	326	80	73	81	73	76	-0.058	6.02	-0.03
223	32.752	33.471	0.15	0.15	1.73	76	-1.29	1.36	77	-0.8	95	0.050	100	100	0.1	-0.1	588	423	382	434	436	453	800	327	80	73	81	73	76	-0.058	6.15	-0.03
224	32.900	33.621	0.15	0.15	1.74	76	-1.28	1.37	78	-0.8	95	0.050	101	100	0.1	0	589	423	383	433	435	453	799	328	80	73	81	73	76	-0.057	6.01	-0.03
225	33.047	33.772	0.15	0.15	1.73	76	-1.28	1.38	78	-0.8	94	0.050	100	100	0.1	0	588	422	383	433	435	452	799	327	80	73	81	73	76	-0.057	5.99	-0.03
226	33.195	33.921	0.15	0.15	1.73	76	-1.28	1.37	78	-0.8	95	0.050	101	99	0.1	0	589	422	383	433	435	452	799	325	80	73	81	73	76	-0.058	5.99	-0.03
227	33.342	34.071	0.15	0.15	1.74	76	-1.28	1.37	78	-0.8	95	0.050	100	100	0.0	-0.1	589	421	383	432	435	452	799	325	80	73	81	73	76	-0.057	5.97	-0.03
Avg/Tot	33.342	34.071	0.15	0.15	1.76	73		1.38	74		91	0.050	100	100								29.0				71	77	70	72	-0.058		

Wood Heater Lab Data - ASTM E2780 / ASTM E2515

Manufacturer:	Valley Comfort	Equipment Numbers:	283A, 637, 592
Model:	20.2 Series		
Tracking No.:	2253		
Project No.:	0142WS013E		
Run #:	5		
Date:	8/25/17		

TRAIN 1 (First Hour emissions)

Sample Component	Reagent	Filter, Probe or Dish #	Weights		
			Final, mg	Tare, mg	Particulate, mg
B. Front filter catch	Filter	D246	123.5	122.1	1.4
C. Rear filter catch	Filter				0.0
D. Probe catch*	Probe				0.0
E. Filter seals catch*	Seals				0.0

Sub-Total	Total Particulate, mg:	1.4

TRAIN 1 (Post First Hour Change-out)

Sample Component	Reagent	Filter, Probe or Dish #	Weights		
			Final, mg	Tare, mg	Particulate, mg
B. Front filter catch	Filter	D247	123.7	123.1	0.6
C. Rear filter catch	Filter	D248	121.1	121.2	-0.1
D. Probe catch*	Probe	36	114885.8	114885.7	0.1
E. Filter seals catch*	Seals	R509	3307.8	3307.6	0.2

Sub-Total	Total Particulate, mg:	0.8
Train 1 Aggregate	Total Particulate, mg:	2.2

TRAIN 2

Sample Component	Reagent	Filter, Probe or Dish #	Weights		
			Final, mg	Tare, mg	Particulate, mg
A. Front filter catch	Filter	D249	121.5	119.8	1.7
B. Rear filter catch	Filter	D250	120.4	122.0	-1.6
C. Probe catch*	Probe	37	114466.0	114466.0	0.0
D. Filter seals catch*	Seals	R510	4093.6	4091.7	1.9

Total Particulate, mg:	2.0

AMBIENT

Sample Component	Reagent	Filter # or Probe #	Weights		
			Final, mg	Tare, mg	Particulate, mg
A. Front filter catch*	Filter				0.0

Total Particulate, mg:	0.0

*Particulate catch that results in a negative number, is assumed to be zero for probes and seals, negative numbers for filters are assumed to be part of the seal weight.

Component	Equations:
A. Front filter catch	Final (mg) - Tare (mg) = Particulate, mg
B. Rear filter catch	Final (mg) - Tare (mg) = Particulate, mg
C. Probe catch	Final (mg) - Tare (mg) = Particulate, mg

Technician Signature:

Wood Heater Test Results - ASTM E2780 / ASTM E2515

Manufacturer:	Valley Comfort
Model:	20.2 Series
Project No.:	0142WS013E
Tracking No.:	2253
Run:	5
Test Date:	08/25/17

Burn Rate	1.18 kg/hr dry
Average Tunnel Temperature	91 degrees Fahrenheit
Average Gas Velocity in Dilution Tunnel - vs	13.33 feet/second
Average Gas Flow Rate in Dilution Tunnel - Qsd	8493.0 dscf/hour
Average Delta p	0.050 inches H20
Total Time of Test	227 minutes

	AMBIENT	SAMPLE TRAIN 1	SAMPLE TRAIN 2	FIRST HOUR FILTER (TRAIN 1)
Total Sample Volume - Vm	0.000 cubic feet	33.342 cubic feet	34.071 cubic feet	8.755 cubic feet
Average Gas Meter Temperature	72 degrees Fahrenheit	73 degrees Fahrenheit	74 degrees Fahrenheit	71 degrees Fahrenheit
Total Sample Volume (Standard Conditions) - Vmstd	0.000 dscf	31.954 dscf	32.373 dscf	8.417 dscf
Total Particulates - m_n	0 mg	2.2 mg	2 mg	1.4 mg
Particulate Concentration (dry-standard) - C_f/C_s	0.000000 grams/dscf	0.00007 grams/dscf	0.00006 grams/dscf	0.00017 grams/dscf
Total Particulate Emissions - E_T	0.00 grams	2.21 grams	1.99 grams	1.41 grams
Particulate Emission Rate	0.00 grams/hour	0.58 grams/hour	0.52 grams/hour	1.41 grams/hour
Emissions Factor		0.50 g/kg	0.45 g/kg	0.61 g/kg
Difference from Average Total Particulate Emissions		0.11 grams	0.11 grams	
	Dual Train Comparison Results Are Acceptable			

FINAL AVERAGE RESULTS	
Complete Test Run	
Total Particulate Emissions - E_T	2.10 grams
Particulate Emission Rate	0.55 grams/hour
Emissions Factor	0.47 grams/kg
First Hour Emissions	
Total Particulate Emissions - E_T	1.41 grams
Particulate Emission Rate	1.41 grams/hour
Emissions Factor	0.61 grams/kg
7.5% of Average Total Particulate Emissions	0.16 grams

QUALITY CHECKS	
Filter Temps < 90 °F	OK
Filter Face Velocity (47 mm)	OK
Dryer Exit Temp < 80F	OK
Leakage Rate	OK
Ambient Temp (55-90°F)	OK
Negative Probe Weight Eval.	OK
Pro-Rate Variation	OK
Stove Surface ΔT	OK

Technician Signature:

Control No. P-SSAR-0003

Run 5 Emissions

Wood Heater Efficiency Results - CSA B415.1

Technician Signature: _____

Manufacturer:	Valley Comfort
Model:	20.2 Series
Date:	08/25/17
Run:	5
Control #:	0142WS013E
Test Duration:	227
Output Category:	II

Test Results in Accordance with CSA B415.1-09

	HHV Basis	LHV Basis
Overall Efficiency	73.6%	79.5%
Combustion Efficiency	98.4%	98.4%
Heat Transfer Efficiency	75%	80.8%

Output Rate (kJ/h)	17,134	16,254	(Btu/h)
Burn Rate (kg/h)	1.18	2.59	(lb/h)
Input (kJ/h)	23,290	22,093	(Btu/h)

Test Load Weight (dry kg)	4.45	9.80	dry lb
MC wet (%)	17.61862917		
MC dry (%)	21.39		
Particulate (g)	0.55		
CO (g)	127		
Test Duration (h)	3.78		

Emissions	Particulate	CO
g/MJ Output	0.01	1.96
g/kg Dry Fuel	0.12	28.55
g/h	0.15	33.56
lb/MM Btu Output	0.02	4.55

Air/Fuel Ratio (A/F)	14.44

VERSION: 2.2 12/14/2009

OMNI-Test Laboratories, Inc. **ASTM E2780Wood Heater Run Sheets**

Client: **Valley Comfort Systems, Inc.** Project Number: **142WS013E** Run Number: **5**

Model: **20.2 Series** Tracking Number: **2253** Date: **8/25/17**

Test Crew: **A. Kravitz**

OMNI Equipment ID numbers: 464,410,132,576,318,432,419,371,372,432,296-T55,567,413,592

Wood Heater Run Notes

Air Control Settings

Primary:

Set to medium high for fan confirmation:

36 degrees from horizontal

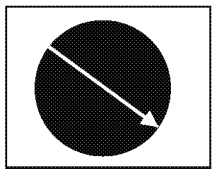

Secondary: Auto

Tertiary/Pilot: Fixed

Fan: Off

Preburn Notes

Time	Notes

Test Notes

Sketch test fuel configuration:

Side View:

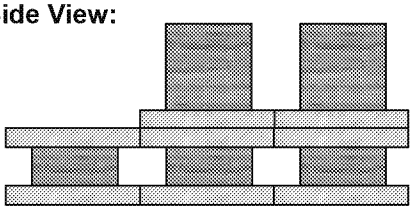

Start up procedures & Timeline:

Bypass: **Closed**
Fuel loaded by: **0:30**
Door closed at: **0:40**
Primary air: **Set @ 4:55**

Notes: **None**

Time	Notes
60:00	Replaced Filter A

Technician Signature: Date: 11/1/2017

Control No. P-SFDT-0001, Effective Date: 01/12/2016

OMNI-Test Laboratories, Inc. **ASTM E2780Wood Heater Run Sheets**

Client: **Valley Comfort Systems, Inc.** Project Number: **142WS013E** Run Number: **5**

Model: **20.2 Series** Tracking Number: **2253** Date: **8/25/17**

Test Crew: **A. Kravitz**

OMNI Equipment ID numbers: 464,410,132,576,318,432,419,371,372,432,296-T55,567,413,592

Wood Heater Supplemental Data

Start Time: 9:32 Booth #: N/A (site testing)

Stop Time: 13:19

Stack Gas Leak Check:

Initial: 0 Final: 0

Sample Train Leak Check:

A: 0 @ -16 "Hg

B: 0 @ -17 "Hg

Calibrations: Span Gas CO_2: 17.00 CO: 4.267

	Pre Test		Post Test	
	Zero	Span	Zero	Span
Time	7:50	7:17	17:17	17:22
CO_2	0.00	17.00	0.09	16.87
CO	0.000	4.267	-0.018	4.101

Air Velocity (ft/min): Initial: <50 Final: <50

Scale Audit (lbs): Initial: 10.0 Final: 10.0

Pitot Tube Leak Test: Initial: 0 Final: 0

Stack Diameter (in): 6

Induced Draft: 0

% Smoke Capture: 100

Flue Pipe Cleaned Prior to First Test in Series:

Date: 8/21/17 Initials: AK

	Initial	Middle	Ending
P_b (in/Hg)	28.76	28.75	28.74
RH (%)	30.5	32.3	30.1
Ambient (°F)	71	73	75

Tunnel Traverse		
Microtector Reading	dP (in H_2O)	T(°F)
1	0.028	80
2	0.048	80
3	0.04	80
4	0.028	80
5	0.03	80
6	0.046	80
7	0.044	80
8	0.026	80
Center:		
-	0.050	80

Background Filter Volume: N/A

Tunnel Static Pressure (in H_20):	
Beginning of Test	End of Test
-0.17	-0.17

Technician Signature: Date: 11/1/2017

Control No. P-SFDT-0001, Effective Date: 01/12/2016

RUN 6

Wood Heater Preburn Data - ASTM E2780

Run:	6

Technician Signature: _____

Manufacturer:	Valley Comfort
Model:	20.2 Series
Tracking No.:	2253
Project No.:	0142WS013E
Test Date:	8/25/17
Beginning Clock Time:	13:50

Preburn Fuel Data

Fuel Piece Lengths (in.):	13		
Total Preburn Weight (lb):	14.9		
uel Moisture Readings (% DB):	19	23.8	23.8
	19.9	23.8	23.6
	23.8	24.9	
	19.4	22.1	
Avg Preburn Moisture (% DB):	22.41		

Coal Bed Range (lb):	0.0 (min)	0.0 (max)

			Temperatures (°F)							
Elapsed Time (min)	Scale (lb)	Stack Draft (in H_2O)	FB Top	FB Bottom	FB Back	FB Left	FB Right	Avg. FB	Stack	Ambient
0	16.9	278	358	359	225	245	291	295.6	-0.041	-0.041
1	16.8	297	362	359	223	242	285	294.2	-0.043	-0.043
2	16.6	324	373	359	221	238	280	294.2	-0.047	-0.047
3	16.4	368	400	359	219	237	279	298.8	-0.049	-0.049
4	16.1	397	431	359	217	236	279	304.4	-0.051	-0.051
5	15.8	437	463	359	215	236	280	310.6	-0.054	-0.054
6	15.4	449	492	359	215	238	282	317.2	-0.055	-0.055
7	15.1	474	519	358	215	241	285	323.6	-0.055	-0.055
8	14.7	484	541	358	215	245	290	329.8	-0.055	-0.055
9	14.4	483	560	358	216	249	295	335.6	-0.056	-0.056
10	14	485	577	358	216	254	301	341.2	-0.057	-0.057
11	13.6	487	593	358	218	260	308	347.4	-0.058	-0.058
12	13.2	494	606	358	219	266	316	353	-0.057	-0.057
13	12.9	497	617	358	220	273	324	358.4	-0.058	-0.058
14	12.5	499	630	358	222	280	332	364.4	-0.057	-0.057
15	12.1	497	641	359	223	287	341	370.2	-0.058	-0.058
16	11.8	495	652	359	225	294	350	376	-0.058	-0.058
17	11.4	492	661	359	226	301	360	381.4	-0.058	-0.058
18	11	489	671	360	228	310	370	387.8	-0.057	-0.057
19	10.7	487	677	360	229	317	382	393	-0.057	-0.057
20	10.3	479	682	361	230	326	394	398.6	-0.057	-0.057
21	10	471	686	362	232	333	408	404.2	-0.056	-0.056
22	9.6	461	688	363	233	340	420	408.8	-0.056	-0.056
23	9.3	458	692	364	234	348	432	414	-0.056	-0.056
24	9	454	695	365	235	356	444	419	-0.056	-0.056
25	8.7	450	700	366	236	363	456	424.2	-0.056	-0.056
26	8.4	446	703	367	237	370	467	428.8	-0.055	-0.055
27	8.1	446	707	369	238	381	478	434.6	-0.055	-0.055
28	7.9	448	711	370	238	388	487	438.8	-0.055	-0.055
29	7.6	443	716	372	240	397	495	444	-0.055	-0.055
30	7.4	441	721	373	241	406	504	449	-0.054	-0.054
31	7.2	439	726	375	243	417	511	454.4	-0.054	-0.054
32	6.9	435	732	377	244	424	519	459.2	-0.054	-0.054
33	6.7	434	739	379	245	433	526	464.4	-0.054	-0.054
34	6.5	433	746	381	247	441	532	469.4	-0.054	-0.054
35	6.3	434	754	383	248	448	537	474	-0.053	-0.053
36	6.1	435	762	385	249	455	542	478.6	-0.054	-0.054
37	6	438	770	387	251	462	548	483.6	-0.054	-0.054
38	5.8	435	776	389	253	468	552	487.6	-0.053	-0.053
39	5.6	438	781	392	255	474	558	492	-0.053	-0.053

Wood Heater Preburn Data - ASTM E2780

Run:	6

Technician Signature: _____

Manufacturer:	Valley Comfort
Model:	20.2 Series
Tracking No.:	2253
Project No.:	0142WS013E
Test Date:	8/25/17
Beginning Clock Time:	13:50

Preburn Fuel Data

Fuel Piece Lengths (in.):	13		
Total Preburn Weight (lb):	14.9		
Fuel Moisture Readings (% DB):	19	23.8	23.8
	19.9	23.8	23.6
	23.8	24.9	
	19.4	22.1	
Avg Preburn Moisture (% DB):	22.41		

Coal Bed Range (lb):	0.0 (min)	0.0 (max)

			Temperatures (°F)							
Elapsed Time (min)	Scale (lb)	Stack Draft (in H_2O)	FB Top	FB Bottom	FB Back	FB Left	FB Right	Avg. FB	Stack	Ambient
40	5.5	440	785	394	257	478	568	496.4	-0.054	-0.054
41	5.3	436	787	396	260	485	577	501	-0.053	-0.053
42	5.2	435	789	399	263	491	585	505.4	-0.052	-0.052
43	5	440	791	401	265	494	591	508.4	-0.054	-0.054
44	4.9	444	795	404	270	499	593	512.2	-0.053	-0.053
45	4.8	439	797	406	274	501	592	514	-0.053	-0.053
46	4.8	430	794	408	277	504	591	514.8	-0.052	-0.052
47	4.7	424	789	410	280	504	588	514.2	-0.052	-0.052
48	4.6	418	781	412	283	505	585	513.2	-0.051	-0.051
49	4.1	413	774	414	285	506	582	512.2	-0.051	-0.051
50	4	407	768	416	287	509	580	512	-0.051	-0.051
51	4.4	403	761	418	288	513	578	511.6	-0.051	-0.051
52	4.3	402	755	420	290	517	576	511.6	-0.05	-0.05
53	4.3	400	749	422	292	522	573	511.6	-0.051	-0.051
54	4.2	397	744	424	294	523	570	511	-0.05	-0.05
55	4.1	396	738	426	296	525	567	510.4	-0.049	-0.049
56	4.1	394	733	428	298	523	565	509.4	-0.049	-0.049
57	4	391	727	430	299	522	560	507.6	-0.049	-0.049
58	4	388	720	431	301	520	557	505.8	-0.049	-0.049
59	4	383	713	433	302	518	553	503.8	-0.049	-0.049
60	3.9	380	706	435	303	518	550	502.4	-0.048	-0.048
61	3.9	377	699	437	303	517	546	500.4	-0.05	-0.05
62	3.8	375	691	438	304	514	543	498	-0.049	-0.049
63	3.8	374	685	440	305	513	541	496.8	-0.048	-0.048
64	3.3	382	678	442	310	513	540	496.6	-0.048	-0.048
65	3.3	372	672	445	309	508	534	493.6	-0.048	-0.048
66	3.3	368	667	449	309	503	529	491.4	-0.048	-0.048
67	3.2	365	660	453	309	499	523	488.8	-0.049	-0.049
68	3.2	362	655	457	309	496	518	487	-0.048	-0.048
69	3.1	360	649	462	309	492	513	485	-0.048	-0.048
70	3.1	358	644	466	308	489	508	483	-0.048	-0.048
71	3.1	357	640	471	307	485	505	481.6	-0.048	-0.048
72	3.1	354	635	475	307	482	501	480	-0.048	-0.048
73	3	355	630	480	306	478	499	478.6	-0.048	-0.048
74	3	353	625	484	305	476	496	477.2	-0.048	-0.048
75	3	351	621	488	304	472	493	475.6	-0.048	-0.048
76	2.9	351	616	492	302	470	489	473.8	-0.047	-0.047
77	2.9	351	613	495	301	467	486	472.4	-0.047	-0.047
78	2.9	350	609	498	300	465	484	471.2	-0.048	-0.048

Wood Heater Test Fuel Data - ASTM E2780

Manufacturer:	Valley Comfort	PB Time	13:09	12% Cal:	12.0
Model:	20.2	PB Temp	78	22% Cal:	22.0
Tracking No.:	2253				
Project No.:	0142WS013E	Test Time	13:11		
Test Date:	8/25/2017	Test Temp	80		
Run No.:	6				

Firebox Volume (ft^3):	1.82
Fuel Piece Length (in):	13
2x4 Crib Weight (lb):	5.2
4x4 Crib Weight (lb):	6.8

Total Fuel Weight (Dry Basis, lb):	9.9	
Fuel Density (lb/ft^3, Dry Basis):	27.82	OK
Loading Density (lb/ft^3, Wet Basis):	6.59	OK
2x4 Percentage:	43%	OK

Coal Bed Range (20-25%): 2.4 - 3

Test Fuel Piece	Weight (lb)	Size	Readings (Dry Basis %)			Dry Weight (lb)
1	1.4	2"x 4"	24.6	23.8	23.0	1.13
2	1.1	2"x 4"	20.6	20.9	19.2	0.91
3	1.3	2"x 4"	20.0	20.5	20.5	1.08
4	3.2	4"x 4"	24.8	20.8	19.2	2.63
5	3.2	4"x 4"	20.6	19.9	19.7	2.67

Spacer Readings (Dry Basis %)			
18.4	15.2		
15.7	19.7		
19.2	17.8		
20.8	20.2		
15.4	16.7		
13.9	19.2		
20.2	20.5		
21.5	18.7		

Technician Signature: _____

Wood Heater Test Data - ASTM E2780 / ASTM E2515

Run: 6

Manufacturer: Valley Comfort
Model: 20.2 Series
Tracking No.: 2253
Project No.: 0142WS013E
Test Date: 25-Aug-17
Beginning Clock Time: 15:09

Total Sampling Time: 120 min
Recording Interval: 1 min
Background Sample Volume: _____ cubic feet

Meter Box Y Factor: 1.003 (1) 0.997 (2) _____ (Amb)

Barometric Pressure:	Begin	Middle	End	Average
	28.68	28.67	28.64	28.66 "Hg

OMNI Equipment Numbers: 464,410,132,576,318,432,419,371,372,432,296-T55,567,413,592

PM Control Modules: 371/372
Dilution Tunnel MW(dry): 29.00 lb/lb-mole
Dilution Tunnel MW(wet): 28.78 lb/lb-mole
Dilution Tunnel H2O: 2.00 percent
Dilution Tunnel Static: -0.170 "H2O
Tunnel Area: 0.19635 ft2
Pitot Tube Cp: 0.99

Avg. Tunnel Velocity: 13.70 ft/sec.
Initial Tunnel Flow: 140.0 scfm
Average Tunnel Flow: 137.7 scfm
Post-Test Leak Check (1): 0.000 cfm @ -16 in. Hg
Post-Test Leak Check (2): 0.000 cfm @ -17 in. Hg
Average Test Piece Fuel Moisture: 21.65 Dry Basis %

Technician Signature: _____

Velocity Traverse Data

	Pt.1	Pt.2	Pt.3	Pt.4	Pt.5	Pt.6	Pt.7	Pt.8	Center	
Initial dP	0.028	0.048	0.040	0.028	0.030	0.046	0.044	0.026	0.050	"H2O
Temp:	80	80	80	80	80	80	80	80	80	°F

V_{strav} 13.21 ft/sec V_{scent} 15.31 ft/sec F_p 0.863

Elapsed Time (min)	Particulate Sampling Data: Gas Meter 1 (ft^3)	Gas Meter 2 (ft^3)	Sample Rate 1 (cfm)	Sample Rate 2 (cfm)	Orifice dH 1 ("H_2O)	Meter 1 Temp (°F)	Meter 1 Vacuum ("Hg)	Orifice dH 2 ("H_2O)	Meter 2 Temp (°F)	Meter 2 Vacuum ("Hg)	Dilution Tunnel (°F)	Dilution Tunnel Center dP	Pro. Rate 1	Pro. Rate 2	Fuel Weight (lb): Scale Reading	Weight Change	Temperature Data (°F): Firebox Top	Firebox Bottom	Firebox Back	Firebox Left	Firebox Right	Avg. Stove Surface	Catalyst Exit	Stack	Filter 1	Dryer Exit 1	Filter 2	Dryer Exit 2	Ambient	Stack Gas Data: Draft ("H_2O)	CO_2 (%)	CO (%)
0	0.000	0.000			-0.02	77	-0.5	0.01	76	-0.2	122	0.050			12.0		610	502	316	473	484	477	753	453	67	74	68	71	77	-0.060	2.02	0.01
1	0.123	0.139	0.12	0.14	1.79	77	-1.38	1.43	76	-0.8	126	0.050	85	94	11.9	-0.1	603	507	325	467	475	475	703	435	70	68	70	66	77	-0.070	2.12	0
2	0.272	0.292	0.15	0.15	1.81	77	-1.39	1.42	77	-0.8	125	0.050	103	103	11.7	-0.2	609	510	331	465	470	477	871	456	71	67	71	66	77	-0.075	9.63	0.16
3	0.421	0.445	0.15	0.15	1.79	77	-1.39	1.43	77	-0.8	124	0.050	102	103	11.5	-0.2	623	512	333	463	467	480	957	485	71	66	72	66	77	-0.076	9.75	0.59
4	0.569	0.597	0.15	0.15	1.81	77	-1.4	1.42	77	-0.8	124	0.050	102	103	11.3	-0.2	641	514	334	462	468	484	1006	500	72	66	72	65	76	-0.076	9.9	0.68
5	0.717	0.749	0.15	0.15	1.81	77	-1.39	1.42	77	-0.8	124	0.050	102	103	11.1	-0.2	660	515	334	463	470	488	1030	509	72	66	72	65	77	-0.077	9.94	0.62
6	0.864	0.901	0.15	0.15	1.79	77	-1.39	1.41	77	-0.8	124	0.050	101	103	10.9	-0.2	678	515	333	464	474	493	1041	512	72	66	73	65	76	-0.077	9.89	0.65
7	1.012	1.052	0.15	0.15	1.79	77	-1.4	1.40	77	-0.8	124	0.050	102	102	10.7	-0.2	695	514	332	466	479	497	1056	515	73	66	73	65	76	-0.077	10.03	0.66
8	1.159	1.203	0.15	0.15	1.78	77	-1.4	1.40	77	-0.8	124	0.050	101	102	10.5	-0.2	711	514	330	469	484	502	1066	516	73	66	73	65	76	-0.077	9.93	0.62
9	1.306	1.353	0.15	0.15	1.77	77	-1.39	1.40	77	-0.8	124	0.050	101	101	10.3	-0.2	725	513	329	472	489	506	1071	517	73	66	73	65	76	-0.077	9.75	0.61
10	1.452	1.504	0.15	0.15	1.77	77	-1.39	1.38	77	-0.8	124	0.050	100	102	10.1	-0.2	737	512	328	473	494	509	1067	517	73	66	73	65	76	-0.077	9.64	0.61
11	1.599	1.654	0.15	0.15	1.77	77	-1.39	1.38	77	-0.9	124	0.050	101	101	9.9	-0.2	747	510	326	475	499	511	1062	513	73	66	73	65	76	-0.077	9.5	0.56
12	1.745	1.805	0.15	0.15	1.76	77	-1.39	1.39	77	-0.9	123	0.050	100	102	9.7	-0.2	756	509	325	477	504	514	1065	511	73	66	73	65	76	-0.077	9.49	0.51
13	1.890	1.954	0.15	0.15	1.76	77	-1.39	1.38	76	-0.9	123	0.050	100	101	9.6	-0.1	766	507	324	479	509	517	1071	510	73	66	73	65	76	-0.077	9.37	0.52
14	2.036	2.104	0.15	0.15	1.74	77	-1.39	1.38	76	-0.9	123	0.050	100	101	9.4	-0.2	774	506	323	481	514	520	1071	509	73	65	73	65	76	-0.077	9.39	0.42
15	2.182	2.253	0.15	0.15	1.74	77	-1.39	1.37	76	-0.9	123	0.050	100	101	9.2	-0.2	782	504	322	483	517	522	1069	509	73	65	73	65	76	-0.077	9.27	0.47
16	2.327	2.404	0.15	0.15	1.73	77	-1.4	1.38	76	-0.9	123	0.050	100	102	9.0	-0.2	789	503	321	485	521	524	1079	508	73	65	73	65	76	-0.076	9.32	0.6
17	2.472	2.552	0.15	0.15	1.69	77	-1.38	1.38	76	-0.9	122	0.050	100	100	8.9	-0.1	797	501	321	487	524	526	1088	508	74	65	73	65	76	-0.076	9.29	0.52
18	2.617	2.702	0.15	0.15	1.70	76	-1.38	1.36	76	-0.9	122	0.050	100	101	8.7	-0.2	804	500	320	490	528	528	1097	507	74	65	73	65	76	-0.076	9.44	0.26
19	2.762	2.851	0.15	0.15	1.70	76	-1.39	1.35	76	-0.9	121	0.050	100	101	8.5	-0.2	811	498	319	493	532	531	1096	504	74	65	73	65	76	-0.076	9.39	0.25
20	2.908	3.001	0.15	0.15	1.69	76	-1.39	1.37	76	-0.9	121	0.050	100	101	8.4	-0.1	817	497	318	495	537	533	1098	501	74	65	73	65	76	-0.077	9.32	0.35
21	3.053	3.149	0.15	0.15	1.72	76	-1.4	1.36	76	-0.9	121	0.050	100	100	8.2	-0.2	823	496	318	499	541	535	1109	500	74	65	73	65	77	-0.076	9.51	0.65
22	3.198	3.298	0.15	0.15	1.72	76	-1.4	1.35	76	-0.9	121	0.050	100	101	8.0	-0.2	829	495	318	503	545	538	1117	500	74	65	74	65	76	-0.076	9.36	0.85
23	3.343	3.447	0.15	0.15	1.71	76	-1.41	1.35	76	-0.9	121	0.050	100	101	7.9	-0.1	834	494	318	506	549	540	1118	503	74	65	74	65	76	-0.076	9.25	0.68
24	3.488	3.596	0.15	0.15	1.72	76	-1.41	1.36	76	-0.9	121	0.050	100	101	7.7	-0.2	839	493	318	510	554	543	1111	505	74	65	74	65	76	-0.077	9.37	0.74
25	3.633	3.744	0.15	0.15	1.72	77	-1.41	1.36	76	-0.9	121	0.050	99	100	7.6	-0.1	843	493	319	516	562	547	1105	506	74	66	74	65	76	-0.076	9.44	0.86
26	3.778	3.892	0.15	0.15	1.70	77	-1.41	1.36	76	-0.9	121	0.050	99	100	7.4	-0.2	846	492	319	521	570	550	1102	506	74	66	74	66	76	-0.076	9.47	0.8
27	3.922	4.041	0.14	0.15	1.71	76	-1.4	1.35	76	-0.9	121	0.050	99	101	7.3	-0.1	849	491	319	526	577	552	1102	504	74	66	74	66	77	-0.076	9.52	0.72
28	4.067	4.190	0.15	0.15	1.71	76	-1.4	1.35	76	-0.9	121	0.050	100	101	7.1	-0.2	853	491	320	531	583	556	1111	504	74	66	74	66	76	-0.076	9.42	0.66
29	4.212	4.339	0.15	0.15	1.70	77	-1.39	1.36	76	-0.9	121	0.050	99	101	7.0	-0.1	855	493	320	536	589	559	1117	504	74	66	74	66	76	-0.076	9.48	0.61
30	4.356	4.487	0.14	0.15	1.68	77	-1.39	1.36	76	-0.9	120	0.050	99	100	6.8	-0.2	858	492	321	542	594	561	1121	500	74	66	75	66	77	-0.075	9.59	0.57
31	4.500	4.635	0.14	0.15	1.68	76	-1.4	1.35	76	-0.9	120	0.050	99	100	6.7	-0.1	861	492	322	547	597	564	1126	500	74	66	75	66	77	-0.075	9.58	0.55
32	4.645	4.783	0.15	0.15	1.69	76	-1.4	1.34	76	-0.9	122	0.050	100	100	6.5	-0.2	852	492	309	536	592	556	1126	502	74	66	75	66	77	-0.076	9.66	0.8
33	4.790	4.932	0.15	0.15	1.70	76	-1.41	1.35	76	-0.9	123	0.050	100	101	6.3	-0.2	849	493	303	533	587	553	1128	502	74	66	75	66	77	-0.076	9.58	0.72
34	4.934	5.081	0.14	0.15	1.71	76	-1.4	1.36	76	-0.9	123	0.050	99	101	6.2	-0.1	845	493	297	531	582	550	1132	502	75	66	75	66	78	-0.074	9.46	0.65
35	5.079	5.229	0.15	0.15	1.72	76	-1.39	1.35	76	-0.9	123	0.050	100	100	6.0	-0.2	839	493	293	532	577	547	1120	499	75	67	75	66	78	-0.071	9.3	0.6
36	5.224	5.377	0.15	0.15	1.72	76	-1.37	1.35	76	-0.9	122	0.050	100	100	5.9	-0.1	837	493	289	531	572	544	1106	498	75	67	75	66	78	-0.066	9.11	0.55
37	5.369	5.525	0.15	0.15	1.71	76	-1.37	1.34	76	-0.9	123	0.050	100	100	5.8	-0.1	830	492	287	529	567	541	1098	499	75	67	75	66	78	-0.066	9	0.68

Wood Heater Test Data - ASTM E2780 / ASTM E2515

Run: 6

Manufacturer: Valley Comfort
Model: 20.2 Series
Tracking No.: 2253
Project No.: 0142WS013E
Test Date: 25-Aug-17
Beginning Clock Time: 15:09

Total Sampling Time: 120 min
Recording Interval: 1 min
Background Sample Volume: _____ cubic feet

Meter Box Y Factor: 1.003 (1) 0.997 (2) _____ (Amb)

Barometric Pressure:	Begin	Middle	End	Average
	28.68	28.67	28.64	28.66 "Hg

OMNI Equipment Numbers: 464,410,132,576,318,432,419,371,372,432,296-T55,567,413,592

PM Control Modules: 371/372
Dilution Tunnel MW(dry): 29.00 lb/lb-mole
Dilution Tunnel MW(wet): 28.78 lb/lb-mole
Dilution Tunnel H2O: 2.00 percent
Dilution Tunnel Static: -0.170 "H2O
Tunnel Area: 0.19635 ft2
Pitot Tube Cp: 0.99

Avg. Tunnel Velocity: 13.70 ft/sec.
Initial Tunnel Flow: 140.0 scfm
Average Tunnel Flow: 137.7 scfm
Post-Test Leak Check (1): 0.000 cfm @ -16 in. Hg
Post-Test Leak Check (2): 0.000 cfm @ -17 in. Hg
Average Test Piece Fuel Moisture: 21.65 Dry Basis %

Technician Signature: _____

Velocity Traverse Data

	Pt.1	Pt.2	Pt.3	Pt.4	Pt.5	Pt.6	Pt.7	Pt.8	Center	
Initial dP	0.028	0.048	0.040	0.028	0.030	0.046	0.044	0.026	0.050	"H2O
Temp:	80	80	80	80	80	80	80	80	80	°F

V_{strav} 13.21 ft/sec V_{scent} 15.31 ft/sec F_p 0.863

	Particulate Sampling Data														Fuel Weight (lb)		Temperature Data (°F)													Stack Gas Data		
Elapsed Time (min)	Gas Meter 1 (ft^3)	Gas Meter 2 (ft^3)	Sample Rate 1 (cfm)	Sample Rate 2 (cfm)	Orifice dH 1 ("H_2O)	Meter 1 Temp (°F)	Meter 1 Vacuum ("Hg)	Orifice dH 2 ("H_2O)	Meter 2 Temp (°F)	Meter 2 Vacuum ("Hg)	Dilution Tunnel (°F)	Dilution Tunnel Center dP	Pro. Rate 1	Pro. Rate 2	Scale Reading	Weight Change	Firebox Top	Firebox Bottom	Firebox Back	Firebox Left	Firebox Right	Avg. Stove Surface	Catalyst Exit	Stack	Filter 1	Dryer Exit 1	Filter 2	Dryer Exit 2	Ambient	Draft ("H_2O)	CO_2 (%)	CO (%)
38	5.513	5.674	0.14	0.15	1.71	76	-1.38	1.34	76	-0.9	123	0.050	99	101	5.6	-0.2	826	492	283	528	565	539	1097	499	75	67	76	66	78	-0.069	8.93	0.69
39	5.657	5.823	0.14	0.15	1.71	76	-1.41	1.35	76	-0.9	123	0.050	99	101	5.5	-0.1	825	492	282	526	561	537	1102	502	75	67	76	67	78	-0.076	9.09	0.73
40	5.802	5.970	0.15	0.15	1.69	76	-1.4	1.35	76	-0.9	124	0.050	100	99	5.3	-0.2	821	493	280	525	561	536	1111	503	75	67	76	67	78	-0.077	9.29	0.75
41	5.946	6.118	0.14	0.15	1.67	76	-1.41	1.34	76	-0.9	124	0.050	99	100	5.2	-0.1	819	493	279	525	561	535	1115	506	76	68	76	67	79	-0.077	9.25	0.68
42	6.090	6.267	0.14	0.15	1.67	76	-1.41	1.34	76	-0.9	124	0.050	99	101	5.0	-0.2	818	493	277	526	560	535	1113	509	76	68	76	67	79	-0.077	9.23	0.57
43	6.235	6.415	0.15	0.15	1.69	76	-1.41	1.34	76	-0.9	124	0.050	100	100	4.9	-0.1	816	493	277	527	560	535	1111	510	76	68	76	67	79	-0.077	9.24	0.33
44	6.380	6.564	0.15	0.15	1.69	76	-1.41	1.35	76	-0.9	125	0.050	100	101	4.8	-0.1	813	493	276	527	559	534	1095	508	76	68	76	67	79	-0.077	9.02	0.15
45	6.524	6.712	0.14	0.15	1.71	77	-1.41	1.35	76	-0.9	124	0.050	99	100	4.7	-0.1	809	494	275	528	555	532	1088	508	76	68	76	67	79	-0.076	9	0.1
46	6.669	6.860	0.15	0.15	1.71	77	-1.42	1.34	77	-0.9	124	0.050	100	100	4.5	-0.2	807	494	274	530	551	531	1082	506	76	68	77	67	79	-0.076	8.91	0.09
47	6.814	7.008	0.15	0.15	1.71	77	-1.41	1.33	77	-0.9	125	0.050	100	100	4.4	-0.1	804	495	274	530	547	530	1080	506	76	68	77	67	79	-0.076	8.9	0.09
48	6.959	7.156	0.15	0.15	1.69	77	-1.41	1.34	77	-0.9	124	0.050	100	100	4.3	-0.1	799	495	274	531	543	528	1077	505	76	69	77	68	79	-0.075	8.85	0.1
49	7.103	7.305	0.14	0.15	1.70	77	-1.41	1.35	77	-0.9	124	0.050	99	101	4.2	-0.1	796	496	274	533	539	528	1071	506	76	69	77	68	79	-0.076	9.01	0.09
50	7.248	7.452	0.15	0.15	1.71	77	-1.41	1.35	77	-0.9	124	0.050	100	99	4.1	-0.1	794	497	274	533	537	527	1065	503	76	69	77	68	79	-0.076	8.95	0.02
51	7.392	7.601	0.14	0.15	1.68	77	-1.41	1.34	77	-0.9	123	0.050	99	101	3.9	-0.2	792	497	274	534	534	526	1059	501	77	69	77	68	79	-0.076	8.55	0
52	7.536	7.749	0.14	0.15	1.67	77	-1.4	1.34	77	-0.9	123	0.050	99	100	3.9	0	789	498	274	531	533	525	1049	500	77	69	77	68	79	-0.075	8.36	0
53	7.680	7.897	0.14	0.15	1.67	77	-1.4	1.35	77	-0.9	123	0.050	99	100	3.8	-0.1	785	499	274	529	531	524	1041	497	77	69	77	68	79	-0.075	8.11	0
54	7.825	8.046	0.15	0.15	1.68	77	-1.41	1.34	77	-0.9	123	0.050	100	101	3.7	-0.1	782	500	274	526	530	522	1033	494	77	69	77	68	79	-0.075	7.78	0
55	7.970	8.194	0.15	0.15	1.69	77	-1.41	1.35	77	-0.9	122	0.050	100	100	3.6	-0.1	777	500	273	522	527	520	1025	491	77	70	77	68	80	-0.075	7.64	0
56	8.115	8.342	0.15	0.15	1.70	77	-1.41	1.34	77	-0.9	123	0.050	100	100	3.5	-0.1	772	501	274	519	525	518	1020	490	77	70	77	68	79	-0.075	7.67	0
57	8.260	8.490	0.15	0.15	1.71	78	-1.41	1.34	77	-0.9	122	0.050	99	100	3.4	-0.1	769	502	274	515	523	517	1020	490	77	70	77	68	79	-0.075	7.61	0
58	8.405	8.639	0.15	0.15	1.71	78	-1.4	1.35	77	-0.9	123	0.050	99	101	3.3	-0.1	765	503	274	512	521	515	1022	489	77	70	77	69	79	-0.075	7.47	0
59	8.550	8.787	0.15	0.15	1.69	78	-1.41	1.35	77	-0.9	122	0.050	99	100	3.2	-0.1	761	504	273	507	518	513	1020	486	77	70	77	69	79	-0.076	7.27	0
60	8.695	8.935	0.15	0.15	1.70	78	-1.41	1.34	77	-0.9	121	0.050	99	100	3.1	-0.1	758	505	274	504	516	511	1014	485	77	70	78	69	80	-0.074	7.22	0
61	8.843	9.084	0.15	0.15	1.74	78	-1.24	1.34	77	-0.9	122	0.050	101	100	3.1	0	752	506	275	501	513	509	1009	484	77	70	78	69	79	-0.075	7.13	0
62	8.990	9.232	0.15	0.15	1.76	78	-1.27	1.33	78	-0.9	122	0.050	101	100	3.0	-0.1	750	507	275	497	512	508	1010	483	78	70	77	69	79	-0.074	6.99	0
63	9.137	9.381	0.15	0.15	1.74	78	-1.28	1.35	78	-0.9	122	0.050	101	100	2.9	-0.1	747	509	276	496	510	508	1025	481	79	70	78	69	80	-0.075	7	0.01
64	9.284	9.529	0.15	0.15	1.73	78	-1.27	1.35	78	-0.9	122	0.050	101	100	2.9	0	746	509	276	493	511	507	1041	479	79	70	78	69	79	-0.074	7.07	0.06
65	9.431	9.677	0.15	0.15	1.76	78	-1.28	1.35	78	-0.9	121	0.050	101	100	2.8	-0.1	744	510	278	493	510	507	1042	477	79	71	77	69	79	-0.074	7.1	0.03
66	9.578	9.826	0.15	0.15	1.74	78	-1.27	1.34	78	-0.9	121	0.050	101	100	2.7	-0.1	741	511	279	492	510	507	1050	474	79	71	78	70	79	-0.074	7.09	0.02
67	9.725	9.974	0.15	0.15	1.74	78	-1.28	1.34	78	-0.9	121	0.050	101	100	2.6	-0.1	740	512	281	493	511	507	1059	473	78	71	78	70	80	-0.074	7.12	0
68	9.872	10.124	0.15	0.15	1.75	78	-1.27	1.35	78	-0.9	122	0.050	101	101	2.6	0	739	513	283	494	512	508	1062	472	78	71	78	70	79	-0.074	7.07	0
69	10.019	10.271	0.15	0.15	1.76	78	-1.27	1.35	78	-0.9	121	0.050	101	99	2.5	-0.1	736	513	284	495	512	508	1062	471	78	71	78	70	79	-0.074	7.24	0.01
70	10.166	10.419	0.15	0.15	1.75	78	-1.27	1.34	78	-0.9	121	0.050	101	100	2.4	-0.1	734	514	286	496	512	508	1058	469	78	71	78	70	80	-0.074	7.16	0
71	10.313	10.568	0.15	0.15	1.75	78	-1.27	1.34	78	-0.9	121	0.050	101	100	2.3	-0.1	732	514	289	497	510	508	1053	467	78	71	78	70	80	-0.075	7.21	0
72	10.460	10.716	0.15	0.15	1.76	78	-1.28	1.34	78	-0.9	121	0.050	101	100	2.3	0	729	515	291	499	509	509	1048	466	78	71	78	70	79	-0.074	7.21	0.01
73	10.607	10.865	0.15	0.15	1.75	78	-1.27	1.35	78	-0.9	120	0.050	101	100	2.2	-0.1	727	515	293	500	507	508	1043	468	78	71	78	70	79	-0.074	7.23	0
74	10.754	11.013	0.15	0.15	1.76	78	-1.28	1.35	78	-0.9	121	0.050	101	100	2.1	-0.1	724	516	297	501	506	509	1030	466	78	71	78	70	79	-0.074	7.22	0
75	10.901	11.161	0.15	0.15	1.76	78	-1.27	1.34	78	-0.9	121	0.050	101	100	2.0	-0.1	720	516	300	502	505	509	1012	465	78	71	78	71	79	-0.073	7.05	0

Wood Heater Test Data - ASTM E2780 / ASTM E2515

Run: 6

Manufacturer: Valley Comfort
Model: 20.2 Series
Tracking No.: 2253
Project No.: 0142WS013E
Test Date: 25-Aug-17
Beginning Clock Time: 15:09

Total Sampling Time: 120 min
Recording Interval: 1 min
Background Sample Volume: _____ cubic feet

Meter Box Y Factor: 1.003 (1) 0.997 (2) _____ (Amb)

Barometric Pressure:	Begin	Middle	End	Average
	28.68	28.67	28.64	28.66 "Hg

OMNI Equipment Numbers: 464,410,132,576,318,432,419,371,372,432,296-T55,567,413,592

PM Control Modules: 371/372
Dilution Tunnel MW(dry): 29.00 lb/lb-mole
Dilution Tunnel MW(wet): 28.78 lb/lb-mole
Dilution Tunnel H2O: 2.00 percent
Dilution Tunnel Static: -0.170 "H2O
Tunnel Area: 0.19635 ft2
Pitot Tube Cp: 0.99

Avg. Tunnel Velocity: 13.70 ft/sec.
Initial Tunnel Flow: 140.0 scfm
Average Tunnel Flow: 137.7 scfm
Post-Test Leak Check (1): 0.000 cfm @ -16 in. Hg
Post-Test Leak Check (2): 0.000 cfm @ -17 in. Hg
Average Test Piece Fuel Moisture: 21.65 Dry Basis %

Technician Signature: _____

Velocity Traverse Data

	Pt.1	Pt.2	Pt.3	Pt.4	Pt.5	Pt.6	Pt.7	Pt.8	Center	
Initial dP	0.028	0.048	0.040	0.028	0.030	0.046	0.044	0.026	0.050	"H2O
Temp:	80	80	80	80	80	80	80	80	80	°F

V_{strav} 13.21 ft/sec V_{scent} 15.31 ft/sec F_p 0.863

	Particulate Sampling Data														Fuel Weight (lb)		Temperature Data (°F)													Stack Gas Data		
Elapsed Time (min)	Gas Meter 1 (ft^3)	Gas Meter 2 (ft^3)	Sample Rate 1 (cfm)	Sample Rate 2 (cfm)	Orifice dH 1 ("H_2O)	Meter 1 Temp (°F)	Meter 1 Vacuum ("Hg)	Orifice dH 2 ("H_2O)	Meter 2 Temp (°F)	Meter 2 Vacuum ("Hg)	Dilution Tunnel (°F)	Dilution Tunnel Center dP	Pro. Rate 1	Pro. Rate 2	Scale Reading	Weight Change	Firebox Top	Firebox Bottom	Firebox Back	Firebox Left	Firebox Right	Avg. Stove Surface	Catalyst Exit	Stack	Filter 1	Dryer Exit 1	Filter 2	Dryer Exit 2	Ambient	Draft ("H_2O)	CO_2 (%)	CO (%)
76	11.048	11.309	0.15	0.15	1.76	78	-1.27	1.34	78	-0.9	120	0.050	101	99	2.0	0	715	517	302	503	502	508	998	462	78	71	78	71	79	-0.073	6.93	0
77	11.195	11.458	0.15	0.15	1.76	78	-1.28	1.34	78	-0.9	120	0.050	101	100	1.9	-0.1	710	517	305	504	500	507	986	461	78	71	78	71	79	-0.073	6.93	0
78	11.342	11.607	0.15	0.15	1.75	78	-1.28	1.35	78	-0.9	120	0.050	101	100	1.8	-0.1	705	518	309	504	496	506	975	461	78	71	78	71	79	-0.073	6.94	0
79	11.490	11.755	0.15	0.15	1.75	78	-1.28	1.35	78	-0.9	120	0.050	101	99	1.8	0	701	518	312	505	494	506	966	462	78	71	78	71	79	-0.073	6.98	0
80	11.637	11.903	0.15	0.15	1.75	78	-1.29	1.34	78	-0.9	120	0.050	101	99	1.7	-0.1	696	519	315	505	492	505	957	460	78	71	78	71	79	-0.072	6.95	0
81	11.784	12.051	0.15	0.15	1.76	78	-1.28	1.34	79	-0.9	120	0.050	101	99	1.7	0	693	519	319	505	491	505	948	456	78	71	78	71	79	-0.072	6.87	0
82	11.931	12.200	0.15	0.15	1.75	78	-1.28	1.34	79	-0.9	120	0.050	101	100	1.6	-0.1	688	520	321	506	490	505	939	454	78	71	78	71	79	-0.072	6.87	0
83	12.078	12.349	0.15	0.15	1.74	79	-1.28	1.35	79	-0.9	119	0.050	100	100	1.5	-0.1	683	520	325	506	490	505	934	453	78	72	78	71	79	-0.073	6.84	0
84	12.225	12.497	0.15	0.15	1.76	79	-1.28	1.34	79	-0.9	120	0.050	100	99	1.5	0	679	521	326	506	489	504	930	451	78	72	78	71	79	-0.064	6.81	0
85	12.372	12.645	0.15	0.15	1.76	79	-1.28	1.34	79	-0.9	119	0.050	100	99	1.4	-0.1	675	522	330	507	489	505	927	451	78	72	78	71	79	-0.064	6.81	0
86	12.519	12.793	0.15	0.15	1.75	79	-1.28	1.34	79	-0.9	119	0.050	100	99	1.4	0	669	523	332	506	489	504	924	450	78	72	78	71	79	-0.064	6.8	0
87	12.667	12.942	0.15	0.15	1.75	79	-1.28	1.35	79	-0.9	119	0.050	101	100	1.3	-0.1	667	523	335	503	490	504	922	448	78	72	78	71	79	-0.064	6.43	0
88	12.814	13.090	0.15	0.15	1.75	79	-1.28	1.35	79	-0.9	119	0.050	100	99	1.3	0	664	524	336	502	489	503	922	447	78	72	78	71	79	-0.064	6.38	0
89	12.961	13.238	0.15	0.15	1.75	79	-1.28	1.35	79	-0.9	118	0.050	100	99	1.2	-0.1	661	524	339	501	488	503	919	446	78	72	78	71	79	-0.064	6.41	0
90	13.108	13.387	0.15	0.15	1.75	79	-1.29	1.34	79	-0.9	118	0.050	100	100	1.2	0	658	525	341	499	488	502	913	445	78	72	78	72	79	-0.063	6.42	0
91	13.255	13.535	0.15	0.15	1.75	79	-1.29	1.33	79	-0.9	118	0.050	100	99	1.1	-0.1	654	525	344	498	488	502	907	445	78	72	77	72	79	-0.063	6.38	0
92	13.402	13.684	0.15	0.15	1.75	79	-1.28	1.34	79	-0.9	118	0.050	100	100	1.1	0	650	526	345	498	488	501	901	445	78	72	78	72	79	-0.063	6.54	0
93	13.549	13.832	0.15	0.15	1.75	79	-1.28	1.35	79	-0.9	118	0.050	100	99	1.0	-0.1	646	526	347	496	488	501	896	441	78	72	77	72	79	-0.063	6.6	0
94	13.696	13.980	0.15	0.15	1.74	79	-1.28	1.34	79	-0.9	118	0.050	100	99	1.0	0	643	526	349	495	488	500	893	441	78	72	77	72	79	-0.063	6.59	0
95	13.843	14.129	0.15	0.15	1.75	79	-1.28	1.34	79	-0.9	118	0.050	100	100	0.9	-0.1	641	527	350	492	488	500	892	440	78	72	77	72	79	-0.063	6.59	0
96	13.990	14.277	0.15	0.15	1.75	79	-1.28	1.34	79	-0.9	118	0.050	100	99	0.9	0	638	527	352	493	489	500	892	439	78	72	77	72	79	-0.063	6.66	0
97	14.137	14.426	0.15	0.15	1.74	79	-1.28	1.34	79	-0.9	117	0.050	100	100	0.8	-0.1	636	527	355	493	490	500	893	439	78	72	77	72	79	-0.063	6.69	0
98	14.284	14.574	0.15	0.15	1.75	79	-1.3	1.35	79	-0.9	117	0.050	100	99	0.8	0	634	527	355	492	491	500	890	438	78	72	77	72	79	-0.063	6.48	0
99	14.431	14.722	0.15	0.15	1.75	79	-1.3	1.34	79	-0.9	116	0.050	100	99	0.7	-0.1	631	527	357	491	492	500	881	437	78	72	77	72	79	-0.062	6.29	0
100	14.579	14.871	0.15	0.15	1.73	79	-1.29	1.34	79	-0.9	117	0.050	101	100	0.7	0	627	528	358	491	491	499	872	432	78	72	77	72	79	-0.062	6.13	0
101	14.726	15.019	0.15	0.15	1.73	79	-1.29	1.34	79	-0.9	117	0.050	100	99	0.6	-0.1	625	528	358	488	492	498	866	430	78	72	77	72	79	-0.062	5.99	0
102	14.873	15.169	0.15	0.15	1.74	79	-1.29	1.34	79	-0.9	116	0.050	100	100	0.6	0	621	528	359	487	491	497	860	428	78	72	77	72	79	-0.062	5.91	0
103	15.020	15.316	0.15	0.15	1.73	79	-1.29	1.34	79	-0.9	116	0.050	100	98	0.6	0	618	528	360	488	492	497	852	428	78	72	77	72	79	-0.062	5.78	0
104	15.167	15.464	0.15	0.15	1.72	79	-1.28	1.34	79	-0.9	116	0.050	100	99	0.5	-0.1	614	528	359	488	493	496	837	429	78	72	77	72	79	-0.062	5.53	0
105	15.314	15.613	0.15	0.15	1.74	79	-1.28	1.34	79	-0.9	116	0.050	100	100	0.5	0	612	528	358	487	492	495	833	430	78	72	77	72	79	-0.062	5.44	0
106	15.461	15.761	0.15	0.15	1.73	79	-1.29	1.34	79	-0.9	116	0.050	100	99	0.5	0	609	529	357	486	491	494	831	430	78	72	77	72	79	-0.062	5.37	0
107	15.608	15.911	0.15	0.15	1.73	79	-1.29	1.35	79	-0.9	116	0.050	100	100	0.4	-0.1	607	529	356	485	493	494	829	429	77	72	77	72	79	-0.062	4.94	0
108	15.755	16.058	0.15	0.15	1.71	79	-1.28	1.34	79	-0.9	116	0.050	100	98	0.4	0	604	530	355	481	491	492	824	429	77	72	77	72	79	-0.062	4.94	0
109	15.903	16.207	0.15	0.15	1.73	79	-1.29	1.33	79	-0.9	116	0.050	101	100	0.4	0	601	531	352	477	489	490	822	429	77	72	77	72	79	-0.062	5.02	0
110	16.050	16.355	0.15	0.15	1.72	79	-1.29	1.34	79	-0.9	115	0.050	100	99	0.4	0	599	532	349	476	487	489	822	428	77	72	77	72	79	-0.062	5.07	0
111	16.197	16.504	0.15	0.15	1.72	79	-1.28	1.34	79	-0.9	116	0.050	100	100	0.3	-0.1	597	534	346	471	484	486	823	428	77	72	77	72	79	-0.062	5.09	0
112	16.345	16.652	0.15	0.15	1.73	79	-1.29	1.35	79	-0.9	115	0.050	101	99	0.3	0	595	536	343	468	481	485	825	429	77	72	77	72	79	-0.062	5.19	0
113	16.492	16.800	0.15	0.15	1.72	79	-1.29	1.34	79	-0.9	115	0.050	100	99	0.3	0	593	537	341	465	477	483	827	427	77	72	77	72	79	-0.061	5.09	0

Wood Heater Test Data - ASTM E2780 / ASTM E2515

Run: 6

Manufacturer: Valley Comfort
Model: 20.2 Series
Tracking No.: 2253
Project No.: 0142WS013E
Test Date: 25-Aug-17
Beginning Clock Time: 15:09

Total Sampling Time: 120 min
Recording Interval: 1 min
Background Sample Volume: _____ cubic feet

Meter Box Y Factor: 1.003 (1) 0.997 (2) _____ (Amb)

Barometric Pressure:	Begin	Middle	End	Average
	28.68	28.67	28.64	28.66 "Hg

OMNI Equipment Numbers: 464,410,132,576,318,432,419,371,372,432,296-T55,567,413,592

PM Control Modules: 371/372
Dilution Tunnel MW(dry): 29.00 lb/lb-mole
Dilution Tunnel MW(wet): 28.78 lb/lb-mole
Dilution Tunnel H2O: 2.00 percent
Dilution Tunnel Static: -0.170 "H2O
Tunnel Area: 0.19635 ft2
Pitot Tube Cp: 0.99

Avg. Tunnel Velocity: 13.70 ft/sec.
Initial Tunnel Flow: 140.0 scfm
Average Tunnel Flow: 137.7 scfm
Post-Test Leak Check (1): 0.000 cfm @ -16 in. Hg
Post-Test Leak Check (2): 0.000 cfm @ -17 in. Hg
Average Test Piece Fuel Moisture: 21.65 Dry Basis %

Technician Signature: _____

Velocity Traverse Data

	Pt.1	Pt.2	Pt.3	Pt.4	Pt.5	Pt.6	Pt.7	Pt.8	Center	
Initial dP	0.028	0.048	0.040	0.028	0.030	0.046	0.044	0.026	0.050	"H2O
Temp:	80	80	80	80	80	80	80	80	80	°F

V_{strav} 13.21 ft/sec V_{scent} 15.31 ft/sec F_p 0.863

	Particulate Sampling Data														Fuel Weight (lb)		Temperature Data (°F)													Stack Gas Data		
Elapsed Time (min)	Gas Meter 1 (ft^3)	Gas Meter 2 (ft^3)	Sample Rate 1 (cfm)	Sample Rate 2 (cfm)	Orifice dH 1 ("H_2O)	Meter 1 Temp (°F)	Meter 1 Vacuum ("Hg)	Orifice dH 2 ("H_2O)	Meter 2 Temp (°F)	Meter 2 Vacuum ("Hg)	Dilution Tunnel (°F)	Dilution Tunnel Center dP	Pro. Rate 1	Pro. Rate 2	Scale Reading	Weight Change	Firebox Top	Firebox Bottom	Firebox Back	Firebox Left	Firebox Right	Avg. Stove Surface	Catalyst Exit	Stack	Filter 1	Dryer Exit 1	Filter 2	Dryer Exit 2	Ambient	Draft ("H_2O)	CO_2 (%)	CO (%)
114	16.640	16.949	0.15	0.15	1.72	79	-1.29	1.34	80	-0.9	116	0.050	101	99	0.3	0	591	539	337	461	473	480	828	427	77	72	77	72	79	-0.061	5.14	0
115	16.787	17.097	0.15	0.15	1.74	79	-1.29	1.33	80	-0.9	116	0.050	100	99	0.2	-0.1	590	540	335	458	471	479	827	427	77	72	77	72	79	-0.061	5.11	0
116	16.935	17.246	0.15	0.15	1.72	79	-1.29	1.34	80	-0.9	115	0.050	101	99	0.2	0	587	542	332	456	467	477	826	426	77	72	77	72	78	-0.061	5.1	0
117	17.082	17.394	0.15	0.15	1.74	79	-1.28	1.35	80	-0.9	115	0.050	100	99	0.2	0	586	543	331	453	465	476	825	426	77	72	77	72	78	-0.061	4.99	0
118	17.229	17.543	0.15	0.15	1.76	79	-1.28	1.35	80	-0.9	115	0.050	100	99	0.1	-0.1	584	544	328	449	462	473	824	425	77	72	77	72	79	-0.062	4.98	0
119	17.376	17.691	0.15	0.15	1.73	79	-1.29	1.34	80	-0.9	115	0.050	100	99	0.1	0	581	545	326	447	459	472	824	425	77	72	77	72	79	-0.061	5.09	0
120	17.524	17.840	0.15	0.15	1.75	79	-1.28	1.34	80	-0.9	115	0.050	101	99	0.0	-0.1	580	547	324	444	455	470	825	425	77	72	77	72	79	-0.061	4.96	0
Avg/Tot	17.524	17.840	0.15	0.15	1.72	78		1.34	78		121	0.050	100	100								7.0				69	76	69	78	-0.071		

Wood Heater Lab Data - ASTM E2780 / ASTM E2515

Manufacturer:	Valley Comfort	Equipment Numbers:	283A, 637, 592
Model:	20.2 Series		
Tracking No.:	2253		
Project No.:	0142WS013E		
Run #:	6		
Date:	8/25/17		

TRAIN 1 (First Hour emissions)

Sample Component	Reagent	Filter, Probe or Dish #	Weights		
			Final, mg	Tare, mg	Particulate, mg
B. Front filter catch	Filter	D251	123.7	121.7	2.0
C. Rear filter catch	Filter				0.0
D. Probe catch*	Probe				0.0
E. Filter seals catch*	Seals				0.0

Sub-Total	Total Particulate, mg:	2.0

TRAIN 1 (Post First Hour Change-out)

Sample Component	Reagent	Filter, Probe or Dish #	Weights		
			Final, mg	Tare, mg	Particulate, mg
B. Front filter catch	Filter	D252	121.1	120.1	1.0
C. Rear filter catch	Filter	D253	120.3	121.9	-1.6
D. Probe catch*	Probe	38	114151.4	114151.3	0.1
E. Filter seals catch*	Seals	R511	4141.6	4139.2	2.4

Sub-Total	Total Particulate, mg:	1.9
Train 1 Aggregate	Total Particulate, mg:	3.9

TRAIN 2

Sample Component	Reagent	Filter, Probe or Dish #	Weights		
			Final, mg	Tare, mg	Particulate, mg
A. Front filter catch	Filter	D254	124.1	121.4	2.7
B. Rear filter catch	Filter	D255	121.6	122.4	-0.8
C. Probe catch*	Probe	58	117066.7	117066.6	0.1
D. Filter seals catch*	Seals	R512	4177.5	4175.7	1.8

Total Particulate, mg:	3.8

AMBIENT

Sample Component	Reagent	Filter # or Probe #	Weights		
			Final, mg	Tare, mg	Particulate, mg
A. Front filter catch*	Filter				0.0

Total Particulate, mg:	0.0

*Particulate catch that results in a negative number, is assumed to be zero for probes and seals, negative numbers for filters are assumed to be part of the seal weight.

Component	Equations:
A. Front filter catch	Final (mg) - Tare (mg) = Particulate, mg
B. Rear filter catch	Final (mg) - Tare (mg) = Particulate, mg
C. Probe catch	Final (mg) - Tare (mg) = Particulate, mg

Technician Signature:

Wood Heater Test Results - ASTM E2780 / ASTM E2515

Manufacturer:	Valley Comfort
Model:	20.2 Series
Project No.:	0142WS013E
Tracking No.:	2253
Run:	6
Test Date:	08/25/17

Burn Rate	2.26 kg/hr dry
Average Tunnel Temperature	121 degrees Fahrenheit
Average Gas Velocity in Dilution Tunnel - vs	13.70 feet/second
Average Gas Flow Rate in Dilution Tunnel - Qsd	8264.1 dscf/hour
Average Delta p	0.050 inches H20
Total Time of Test	120 minutes

	AMBIENT	SAMPLE TRAIN 1	SAMPLE TRAIN 2	FIRST HOUR FILTER (TRAIN 1)
Total Sample Volume - Vm	0.000 cubic feet	17.524 cubic feet	17.840 cubic feet	8.695 cubic feet
Average Gas Meter Temperature	78 degrees Fahrenheit	78 degrees Fahrenheit	78 degrees Fahrenheit	77 degrees Fahrenheit
Total Sample Volume (Standard Conditions) - Vmstd	0.000 dscf	16.602 dscf	16.786 dscf	8.252 dscf
Total Particulates - m_n	0 mg	3.9 mg	3.8 mg	2 mg
Particulate Concentration (dry-standard) - C_f/C_s	0.000000 grams/dscf	0.00023 grams/dscf	0.00023 grams/dscf	0.00024 grams/dscf
Total Particulate Emissions - E_T	0.00 grams	3.88 grams	3.74 grams	2.00 grams
Particulate Emission Rate	0.00 grams/hour	1.94 grams/hour	1.87 grams/hour	2.00 grams/hour
Emissions Factor		0.86 g/kg	0.83 g/kg	0.60 g/kg
Difference from Average Total Particulate Emissions		0.07 grams	0.07 grams	
	Dual Train Comparison Results Are Acceptable			

	FINAL AVERAGE RESULTS
Complete Test Run	
Total Particulate Emissions - E_T	3.81 grams
Particulate Emission Rate	1.91 grams/hour
Emissions Factor	0.85 grams/kg
First Hour Emissions	
Total Particulate Emissions - E_T	2.00 grams
Particulate Emission Rate	2.00 grams/hour
Emissions Factor	0.60 grams/kg
7.5% of Average Total Particulate Emissions	0.29 grams

	QUALITY CHECKS
Filter Temps < 90 °F	OK
Filter Face Velocity (47 mm)	OK
Dryer Exit Temp < 80F	OK
Leakage Rate	OK
Ambient Temp (55-90°F)	OK
Negative Probe Weight Eval.	OK
Pro-Rate Variation	OK
Stove Surface ΔT	OK

Technician Signature: _____

Wood Heater Efficiency Results - CSA B415.1

Technician Signature: _____

Manufacturer:	Valley Comfort
Model:	20.2 Series
Date:	08/25/17
Run:	6
Control #:	0142WS013E
Test Duration:	120
Output Category:	IV

Test Results in Accordance with CSA B415.1-09

	HHV Basis	LHV Basis
Overall Efficiency	67.9%	73.4%
Combustion Efficiency	97.6%	97.6%
Heat Transfer Efficiency	70%	75.2%

Output Rate (kJ/h)	30,110	28,562	(Btu/h)
Burn Rate (kg/h)	2.24	4.93	(lb/h)
Input (kJ/h)	44,331	42,053	(Btu/h)

Test Load Weight (dry kg)	4.48	9.86	dry lb
MC wet (%)	17.79695849		
MC dry (%)	21.65		
Particulate (g)	1.91		
CO (g)	171		
Test Duration (h)	2.00		

Emissions	Particulate	CO
g/MJ Output	0.03	2.85
g/kg Dry Fuel	0.43	38.30
g/h	0.95	85.70
lb/MM Btu Output	0.07	6.61

Air/Fuel Ratio (A/F)	14.02

VERSION: 2.2 12/14/2009

OMNI-Test Laboratories, Inc. **ASTM E2780 Wood Heater Run Sheets**

Client: **Valley Comfort Systems, Inc.** Project Number: **142WS013E** Run Number: **6**
Model: **20.2 Series** Tracking Number: **2253** Date: **8/25/17**
Test Crew: **A. Kravitz**
OMNI Equipment ID numbers: 464,410,132,576,318,432,419,371,372,432,296-T55,567,413,592

Wood Heater Run Notes

Air Control Settings

Primary:

Maximum:

180° From Vertical

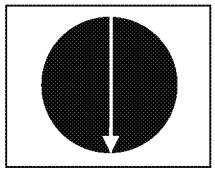

Secondary: Auto

Tertiary/Pilot: Fixed

Fan: On Max

Preburn Notes

Time	Notes
63:00	Removed 0.4 lb

Test Notes

Sketch test fuel configuration:

Side View:

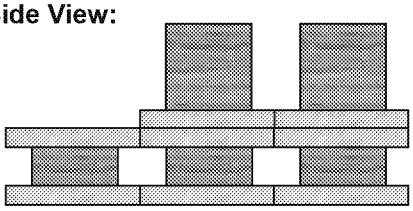

Start up procedures & Timeline:

Bypass: **Closed**
Fuel loaded by: **0:40**
Door closed at: **0:45**
Primary air: **Set @ 4:50**

Notes: Catalyst equivalency test #1

Time	Notes
30:00	Set fan to test setting
60:00	Replaced Filter A

Technician Signature: Date: 11/1/2017

Control No. P-SFDT-0001, Effective Date: 01/12/2016

OMNI-Test Laboratories, Inc. **ASTM E2780 Wood Heater Run Sheets**

Client: **Valley Comfort Systems, Inc.** Project Number: **142WS013E** Run Number: **6**

Model: **20.2 Series** Tracking Number: **2253** Date: **8/25/17**

Test Crew: **A. Kravitz**

OMNI Equipment ID numbers: 464,410,132,576,318,432,419,371,372,432,296-T55,567,413,592

Wood Heater Supplemental Data

Start Time: 15:09

Stop Time: 17:09

Booth #: N/A (site testing)

Stack Gas Leak Check:

Initial: 0 Final: 0

Sample Train Leak Check:

A: 0 @ -16 "Hg

B: 0 @ -17 "Hg

Calibrations: Span Gas CO_2: 17.00 CO: 4.267

	Pre Test		Post Test	
	Zero	Span	Zero	Span
Time	7:50	7:17	17:17	17:22
CO_2	0.00	17.00	0.09	16.87
CO	0.000	4.267	-0.018	4.101

Air Velocity (ft/min): Initial: <50 Final: <50

Scale Audit (lbs): Initial: 10.0 Final: 10.0

Pitot Tube Leak Test: Initial: 0 Final: 0

Stack Diameter (in): 6

Induced Draft: 0

% Smoke Capture: 100

Flue Pipe Cleaned Prior to First Test in Series:

Date: 8/21/17 Initials: _____

	Initial	Middle	Ending
P_b (in/Hg)	28.68	28.67	28.64
RH (%)	23.5	21.7	31.4
Ambient (°F)	78	81	82

Tunnel Traverse		
Microtector Reading	dP (in H_2O)	T(°F)
1	0.028	80
2	0.048	80
3	0.04	80
4	0.028	80
5	0.03	80
6	0.046	80
7	0.044	80
8	0.026	80
Center:		
-	0.050	80

Background Filter Volume: N/A

Tunnel Static Pressure (in H_20):	
Beginning of Test	End of Test
-0.17	-0.17

Technician Signature: _____ Date: 11/1/2017

Control No. P-SFDT-0001, Effective Date: 01/12/2016

RUN 7

Wood Heater Preburn Data - ASTM E2780

Run: 7

Technician Signature:

Manufacturer:	Valley Comfort
Model:	20.2
Tracking No.:	2253
Project No.:	0142WS013E
Test Date:	8/27/17
Beginning Clock Time:	8:55

Preburn Fuel Data

Fuel Piece Lengths (in.):	13
Total Preburn Weight (lb):	14.3

Fuel Moisture Readings (% DB	21.9	19.2	19
	22.3	20.0	21.9
	22.5	20.0	
	20.3	20.1	
Avg Preburn Moisture (% DB):	**20.72**		

Coal Bed Range (lb):	**2.3** (min)	**2.9** (max)

			Temperatures (°F)							
Elapsed Time (min)	Scale (lb)	Stack Draft (in H_2O)	FB Top	FB Bottom	FB Back	FB Left	FB Right	Avg. FB	Stack	Ambient
0	2.8	-0.036	693	508	301	549	541	**518**	390	75
10	2.7	-0.025	627	519	332	483	474	**487**	193	73
20	2.8	-0.019	563	503	311	420	413	**442**	162	72
30	2.8	-0.015	502	478	283	370	365	**400**	147	71
40	2.9	-0.012	449	455	258	330	326	**364**	135	71
50	2.6	-0.011	407	432	238	300	297	**335**	132	72
60	2.8	-0.013	385	415	223	280	190	**299**	152	72

Wood Heater Test Fuel Data - ASTM E2780

Manufacturer:	Valley Comfort	PB Time	8:30	12% Cal:	12.0
Model:	20.2	PB Temp	72	22% Cal:	22.0
Tracking No.:	2253				
Project No.:	0142WS013E	Test Time	9:30		
Test Date:	8/27/2017	Test Temp	74		
Run No.:	7				

Firebox Volume (ft^3):	1.82
Fuel Piece Length (in):	13
2x4 Crib Weight (lb):	4.98
4x4 Crib Weight (lb):	6.62

Total Fuel Weight (Dry Basis, lb):	9.7	
Fuel Density (lb/ft^3, Dry Basis):	27.29	OK
Loading Density (lb/ft^3, Wet Basis):	6.37	OK
2x4 Percentage:	43%	OK

Coal Bed Range (20-25%): **2.32 - 2.9**

Test Fuel Piece	Weight (lb)	Size	Readings (Dry Basis %)			Dry Weight (lb)
1	1.22	2"x 4"	20.4	19.3	19.3	1.02
2	1.26	2"x 4"	20.5	19.5	19.2	1.05
3	1.26	2"x 4"	19.2	19.1	18.8	1.06
4	3.14	4"x 4"	21.9	21.9	22.3	2.57
5	3.08	4"x 4"	22.6	19.0	19.5	2.56

Spacer Readings (Dry Basis %)			
12.3	17.9		
13.4	16.0		
13.0	17.3		
12.7			
18.1			
12.3			
18.1			
17.2			
17.0			
10.2			
17.6			
15.7			
16.0			

Technician Signature:

Wood Heater Test Data - ASTM E2780 / ASTM E2515

Run: 7

Manufacturer: Valley Comfort
Model: 20.2
Tracking No.: 2253
Project No.: 0142WS013E
Test Date: 27-Aug-17
Beginning Clock Time: 09:58

Total Sampling Time: 450 min
Recording Interval: 10 min
Background Sample Volume: _____ cubic feet

Meter Box Y Factor: 1.003 (1) 0.997 (2) _____ (Amb)

Barometric Pressure:	Begin	Middle	End	Average
	28.74	28.63	28.57	28.65 "Hg

OMNI Equipment Numbers: _____

PM Control Modules: 371, 372
Dilution Tunnel MW(dry): 29.00 lb/lb-mole
Dilution Tunnel MW(wet): 28.78 lb/lb-mole
Dilution Tunnel H2O: 2.00 percent
Dilution Tunnel Static: -0.170 "H2O
Tunnel Area: 0.19635 ft2
Pitot Tube Cp: 0.99

Avg. Tunnel Velocity: 13.08 ft/sec.
Initial Tunnel Flow: 137.7 scfm
Average Tunnel Flow: 139.4 scfm
Post-Test Leak Check (1): 0.000 cfm @ 5 in. Hg
Post-Test Leak Check (2): 0.000 cfm @ 8 in. Hg
Average Test Piece Fuel Moisture: 20.17 Dry Basis %

Technician Signature: _____

Velocity Traverse Data

	Pt.1	Pt.2	Pt.3	Pt.4	Pt.5	Pt.6	Pt.7	Pt.8	Center	
Initial dP	0.030	0.046	0.032	0.024	0.030	0.044	0.044	0.030	0.048	"H2O
Temp:	79	79	79	79	79	79	79	79	79	°F

V_{strav} 12.96 ft/sec V_{scent} 14.97 ft/sec F_p 0.865

	Particulate Sampling Data														Fuel Weight (lb)		Temperature Data (°F)													Stack Gas Data		
Elapsed Time (min)	Gas Meter 1 (ft^3)	Gas Meter 2 (ft^3)	Sample Rate 1 (cfm)	Sample Rate 2 (cfm)	Orifice dH 1 ("H_2O)	Meter 1 Temp (°F)	Meter 1 Vacuum ("Hg)	Orifice dH 2 ("H_2O)	Meter 2 Temp (°F)	Meter 2 Vacuum ("Hg)	Dilution Tunnel (°F)	Dilution Tunnel Center dP	Pro. Rate 1	Pro. Rate 2	Scale Reading	Weight Change	Firebox Top	Firebox Bottom	Firebox Back	Firebox Left	Firebox Right	Avg. Stove Surface	Catalyst Exit	Stack	Filter 1	Dryer Exit 1	Filter 2	Dryer Exit 2	Ambient	Draft ("H_2O)	CO_2 (%)	CO (%)
0	0.000	0.000			1.82	72	-1.37	1.41	72	-0.7	98	0.048			11.6		388	412	226	277	185	298	533	235	74	71	74	70	73	-0.049	2.06	0.06
10	1.472	1.506	0.15	0.15	1.81	72	-1.38	1.41	72	-0.7	83	0.048	98	101	11.2	-0.4	413	399	226	266	198	300	637	227	75	70	75	70	72	-0.052	5.18	0.02
20	2.961	3.011	0.15	0.15	1.86	72	-1.39	1.41	72	-0.7	82	0.048	99	100	10.8	-0.4	422	387	219	253	139	284	650	212	75	71	75	70	72	-0.050	5.7	0.01
30	4.474	4.516	0.15	0.15	1.92	72	-1.68	1.40	72	-0.7	82	0.048	101	100	10.4	-0.4	441	376	211	247	137	282	699	211	75	72	75	71	72	-0.050	6.44	0
40	6.002	6.022	0.15	0.15	1.84	72	-1.41	1.39	73	-0.7	82	0.048	102	100	10.0	-0.4	442	368	185	236	96	265	732	215	75	72	75	71	73	-0.048	7.79	-0.01
50	7.511	7.527	0.15	0.15	1.88	72	-1.42	1.39	73	-0.7	83	0.048	100	100	9.6	-0.4	459	363	175	239	95	266	739	230	75	73	75	72	73	-0.043	7.46	-0.01
60	9.022	9.034	0.15	0.15	1.88	73	-1.43	1.39	73	-0.7	84	0.048	100	101	9.2	-0.4	467	360	170	243	95	267	768	239	75	74	75	73	73	-0.043	7.6	-0.01
70	10.516	10.540	0.15	0.15	1.83	73	-1.55	1.39	74	-0.7	86	0.048	99	101	8.5	-0.7	514	359	170	250	99	278	954	274	76	74	76	73	73	-0.048	10.77	0.59
80	12.009	12.046	0.15	0.15	1.86	73	-1.58	1.39	74	-0.7	85	0.048	99	100	7.9	-0.6	561	359	183	271	101	295	907	261	76	74	76	73	74	-0.047	8.02	0.07
90	13.510	13.553	0.15	0.15	1.84	73	-1.57	1.39	74	-0.7	84	0.048	100	100	7.4	-0.5	559	357	194	279	102	298	873	230	76	75	76	74	74	-0.043	7.16	0.03
100	15.013	15.060	0.15	0.15	1.86	74	-1.56	1.39	75	-0.7	83	0.048	100	100	7.0	-0.4	539	354	194	276	93	291	812	204	76	75	77	74	74	-0.040	6.54	0.01
110	16.515	16.567	0.15	0.15	1.85	74	-1.58	1.39	75	-0.7	83	0.048	100	100	6.7	-0.3	513	353	192	271	93	284	776	194	77	75	77	74	75	-0.037	6.77	0.01
120	18.017	18.075	0.15	0.15	1.81	74	-1.57	1.39	75	-0.7	83	0.048	100	100	6.5	-0.2	499	351	191	269	94	281	787	197	77	76	77	75	75	-0.037	7.66	0
130	19.544	19.582	0.15	0.15	1.85	75	-1.92	1.39	76	-0.7	84	0.048	101	100	6.1	-0.4	521	348	193	269	94	285	870	210	77	76	78	75	76	-0.038	8.64	0.08
140	21.158	21.089	0.16	0.15	1.85	75	-1.92	1.38	76	-0.7	85	0.048	107	100	5.6	-0.5	557	344	195	271	94	292	928	223	78	76	78	75	76	-0.040	9.52	0.77
150	22.772	22.596	0.16	0.15	1.79	75	-1.91	1.38	76	-0.7	85	0.048	107	100	5.1	-0.5	584	341	201	276	278	336	937	216	78	76	78	75	76	-0.039	9.01	0.98
160	24.385	24.102	0.16	0.15	1.80	76	-1.91	1.38	77	-0.7	85	0.048	107	100	4.7	-0.4	580	338	209	280	283	338	881	200	78	77	78	76	77	-0.038	7.85	2.45
170	26.000	25.610	0.16	0.15	1.81	76	-1.91	1.38	77	-0.7	85	0.048	107	100	4.2	-0.5	562	334	214	282	284	335	854	191	78	77	79	76	77	-0.036	7.8	2.92
180	27.614	27.118	0.16	0.15	1.81	77	-1.9	1.37	77	-0.7	85	0.048	107	100	3.9	-0.3	544	332	218	284	284	332	824	176	79	77	79	77	77	-0.032	8.26	0.34
190	29.213	28.625	0.16	0.15	1.81	77	-1.91	1.38	78	-0.7	85	0.048	106	100	3.7	-0.2	524	329	220	285	283	328	785	166	79	78	79	77	77	-0.030	8.39	0.11
200	30.761	30.134	0.15	0.15	1.75	77	-1.44	1.37	78	-0.7	86	0.048	102	100	3.5	-0.2	498	327	221	285	280	322	761	163	79	78	79	77	78	-0.013	8.32	0.07
210	32.246	31.642	0.15	0.15	1.82	78	-1.51	1.37	78	-0.7	86	0.048	98	100	3.2	-0.3	489	325	221	285	277	319	781	168	80	78	80	77	78	-0.014	9.42	0.05
220	33.735	33.149	0.15	0.15	1.80	78	-1.5	1.38	79	-0.7	87	0.048	98	100	2.9	-0.3	504	323	222	286	279	323	817	176	80	78	80	77	79	-0.015	9.94	0.6
230	35.224	34.657	0.15	0.15	1.82	78	-1.5	1.38	79	-0.7	87	0.048	98	100	2.7	-0.2	516	322	226	288	283	327	820	174	80	77	81	77	79	-0.014	10.03	0.22
240	36.713	36.165	0.15	0.15	1.79	78	-1.51	1.38	79	-0.7	86	0.048	98	100	2.5	-0.2	506	320	230	289	285	326	767	169	81	77	81	76	79	-0.013	8.27	0.02
250	38.202	37.673	0.15	0.15	1.78	79	-1.5	1.38	80	-0.7	86	0.048	98	100	2.3	-0.2	465	323	233	292	288	320	673	161	80	76	81	76	79	-0.012	7.85	0.01
260	39.693	39.181	0.15	0.15	1.79	79	-1.5	1.38	80	-0.7	86	0.048	98	100	2.2	-0.1	432	329	232	288	286	313	634	155	80	76	81	76	79	-0.011	7.51	0
270	41.184	40.689	0.15	0.15	1.81	79	-1.5	1.38	80	-0.7	87	0.048	98	100	2.1	-0.1	414	331	230	283	282	308	629	157	80	76	81	76	79	-0.011	7.77	-0.01
280	42.676	42.198	0.15	0.15	1.81	79	-1.5	1.38	80	-0.7	87	0.048	98	100	2.0	-0.1	408	333	230	282	280	307	640	165	80	76	81	76	79	-0.012	7.91	-0.01
290	44.168	43.707	0.15	0.15	1.81	79	-1.5	1.37	80	-0.7	87	0.048	98	100	1.9	-0.1	406	335	229	281	279	306	626	169	80	76	81	76	79	-0.013	5.78	-0.02
300	45.659	45.215	0.15	0.15	1.81	79	-1.5	1.38	80	-0.7	88	0.048	98	100	1.8	-0.1	392	331	223	275	275	299	596	177	81	76	81	76	79	-0.014	5.3	0.01
310	47.151	46.724	0.15	0.15	1.81	80	-1.5	1.37	80	-0.7	89	0.048	98	100	1.7	-0.1	386	325	213	267	274	293	601	186	81	76	81	76	79	-0.015	5.31	0
320	48.642	48.231	0.15	0.15	1.82	79	-1.51	1.36	80	-0.7	89	0.048	98	100	1.6	-0.1	385	319	204	261	267	287	613	193	81	77	81	77	79	-0.016	4.91	-0.01
330	50.133	49.739	0.15	0.15	1.82	80	-1.49	1.37	80	-0.7	90	0.048	98	100	1.5	-0.1	384	315	196	259	263	283	613	200	81	77	81	77	79	-0.017	4.98	-0.01
340	51.624	51.246	0.15	0.15	1.82	80	-1.5	1.37	81	-0.7	91	0.048	98	100	1.3	-0.2	387	315	191	261	260	283	628	206	81	77	81	77	79	-0.018	5.19	-0.01
350	53.116	52.753	0.15	0.15	1.80	80	-1.5	1.37	81	-0.7	91	0.048	98	100	1.2	-0.1	391	320	188	265	259	285	633	209	81	77	81	77	80	-0.019	5.21	-0.01
360	54.607	54.260	0.15	0.15	1.82	80	-1.5	1.38	81	-0.7	91	0.048	98	100	1.1	-0.1	394	327	186	268	258	287	639	212	81	77	82	77	80	-0.019	5.09	-0.01

Wood Heater Test Data - ASTM E2780 / ASTM E2515

Run: 7

Manufacturer: Valley Comfort
Model: 20.2
Tracking No.: 2253
Project No.: 0142WS013E
Test Date: 27-Aug-17
Beginning Clock Time: 09:58

Total Sampling Time: 450 min
Recording Interval: 10 min
Background Sample Volume: _____ cubic feet

Meter Box Y Factor: 1.003 (1) 0.997 (2) _____ (Amb)

Barometric Pressure:	Begin	Middle	End	Average
	28.74	28.63	28.57	28.65 "Hg

OMNI Equipment Numbers: _____

PM Control Modules: 371, 372
Dilution Tunnel MW(dry): 29.00 lb/lb-mole
Dilution Tunnel MW(wet): 28.78 lb/lb-mole
Dilution Tunnel H2O: 2.00 percent
Dilution Tunnel Static: -0.170 "H2O
Tunnel Area: 0.19635 ft2
Pitot Tube Cp: 0.99

Avg. Tunnel Velocity: 13.08 ft/sec.
Initial Tunnel Flow: 137.7 scfm
Average Tunnel Flow: 139.4 scfm
Post-Test Leak Check (1): 0.000 cfm @ 5 in. Hg
Post-Test Leak Check (2): 0.000 cfm @ 8 in. Hg
Average Test Piece Fuel Moisture: 20.17 Dry Basis %

Technician Signature: _____

Velocity Traverse Data

	Pt.1	Pt.2	Pt.3	Pt.4	Pt.5	Pt.6	Pt.7	Pt.8	Center	
Initial dP	0.030	0.046	0.032	0.024	0.030	0.044	0.044	0.030	0.048	"H2O
Temp:	79	79	79	79	79	79	79	79	79	°F

V_{strav} 12.96 ft/sec V_{scent} 14.97 ft/sec F_p 0.865

	Particulate Sampling Data														Fuel Weight (lb)		Temperature Data (°F)													Stack Gas Data		
Elapsed Time (min)	Gas Meter 1 (ft^3)	Gas Meter 2 (ft^3)	Sample Rate 1 (cfm)	Sample Rate 2 (cfm)	Orifice dH 1 ("H_2O)	Meter 1 Temp (°F)	Meter 1 Vacuum ("Hg)	Orifice dH 2 ("H_2O)	Meter 2 Temp (°F)	Meter 2 Vacuum ("Hg)	Dilution Tunnel (°F)	Dilution Tunnel Center dP	Pro. Rate 1	Pro. Rate 2	Scale Reading	Weight Change	Firebox Top	Firebox Bottom	Firebox Back	Firebox Left	Firebox Right	Avg. Stove Surface	Catalyst Exit	Stack	Filter 1	Dryer Exit 1	Filter 2	Dryer Exit 2	Ambient	Draft ("H_2O)	CO_2 (%)	CO (%)
370	56.099	55.767	0.15	0.15	1.80	80	-1.5	1.38	81	-0.7	91	0.048	98	100	1.0	-0.1	396	332	186	270	257	288	635	213	82	78	82	77	80	-0.020	4.5	-0.01
380	57.590	57.275	0.15	0.15	1.79	80	-1.39	1.38	81	-0.7	92	0.048	99	100	0.9	-0.1	389	339	186	273	255	288	606	209	82	78	82	78	80	-0.020	4.52	-0.02
390	59.064	58.782	0.15	0.15	1.79	81	-1.47	1.38	81	-0.7	92	0.048	97	100	0.8	-0.1	382	346	188	274	252	288	601	206	82	78	82	78	80	-0.019	4.13	-0.02
400	60.546	60.288	0.15	0.15	1.84	81	-1.56	1.37	82	-0.7	92	0.048	98	100	0.7	-0.1	377	346	189	268	247	285	601	205	83	78	83	78	80	-0.021	3.64	-0.02
410	62.046	61.795	0.15	0.15	1.82	81	-1.51	1.37	82	-0.7	92	0.048	99	100	0.6	-0.1	370	341	189	256	242	280	591	205	82	79	83	78	80	-0.021	3.48	-0.02
420	63.543	63.302	0.15	0.15	1.83	81	-1.51	1.38	82	-0.7	93	0.048	99	100	0.5	-0.1	368	335	193	248	237	276	607	208	83	79	83	79	81	-0.020	4.22	-0.02
430	65.040	64.808	0.15	0.15	1.80	81	-1.52	1.38	82	-0.7	93	0.048	99	100	0.3	-0.2	371	326	201	244	233	275	614	210	83	79	83	79	81	-0.021	4.05	-0.02
440	66.538	66.315	0.15	0.15	1.79	81	-1.51	1.37	82	-0.7	92	0.048	99	100	0.2	-0.1	369	314	206	243	233	273	592	207	83	79	83	79	80	-0.021	4.77	-0.02
450	68.038	67.824	0.15	0.15	1.82	80	-1.51	1.37	81	-0.7	91	0.048	99	100	0.0	-0.2	360	322	210	248	244	277	573	201	82	78	82	78	79	-0.020	4.65	-0.02
Avg/Tot	68.038	67.824	0.15	0.15	1.82	77		1.38	78		87	0.048	100	100								20.8				76	79	76	77	-0.028		

Wood Heater Lab Data - ASTM E2780 / ASTM E2515

Manufacturer:	Valley Comfort	Equipment Numbers:	283A, 637, 592
Model:	20.2		
Tracking No.:	2253		
Project No.:	0142WS013E		
Run #:	7		
Date:	8/27/17		

TRAIN 1 (First Hour emissions)

Sample Component	Reagent	Filter, Probe or Dish #	Weights		
			Final, mg	Tare, mg	Particulate, mg
B. Front filter catch	Filter	D267	121.9	121.6	0.3
C. Rear filter catch	Filter				0.0
D. Probe catch*	Probe				0.0
E. Filter seals catch*	Seals				0.0

Sub-Total	Total Particulate, mg:	0.3

TRAIN 1 (Post First Hour Change-out)

Sample Component	Reagent	Filter, Probe or Dish #	Weights		
			Final, mg	Tare, mg	Particulate, mg
B. Front filter catch	Filter	D269, 270	243.4	242.7	0.7
C. Rear filter catch	Filter	D268	121.8	121.9	-0.1
D. Probe catch*	Probe	64	118208.6	118208.3	0.3
E. Filter seals catch*	Seals	R515	3318.2	3318.7	0.0

Sub-Total	Total Particulate, mg:	0.9
Train 1 Aggregate	Total Particulate, mg:	**1.2**

TRAIN 2

Sample Component	Reagent	Filter, Probe or Dish #	Weights		
			Final, mg	Tare, mg	Particulate, mg
A. Front filter catch	Filter	D271	120.9	119.7	1.2
B. Rear filter catch	Filter	D272	121.8	122.0	-0.2
C. Probe catch*	Probe	65	117084.9	117084.4	0.5
D. Filter seals catch*	Seals	R516	3296.6	3296.8	0.0

Total Particulate, mg:	**1.5**

AMBIENT

Sample Component	Reagent	Filter # or Probe #	Weights		
			Final, mg	Tare, mg	Particulate, mg
A. Front filter catch*	Filter				0.0

Total Particulate, mg:	**0.0**

*Particulate catch that results in a negative number, is assumed to be zero for probes and seals, negative numbers for filters are assumed to be part of the seal weight.

Component	Equations:
A. Front filter catch	Final (mg) - Tare (mg) = Particulate, mg
B. Rear filter catch	Final (mg) - Tare (mg) = Particulate, mg
C. Probe catch	Final (mg) - Tare (mg) = Particulate, mg

Technician Signature: _____

Wood Heater Test Results - ASTM E2780 / ASTM E2515

Manufacturer:	Valley Comfort
Model:	20.2
Project No.:	0142WS013E
Tracking No.:	2253
Run:	7
Test Date:	08/27/17

Burn Rate	**0.59 kg/hr dry**
Average Tunnel Temperature	87 degrees Fahrenheit
Average Gas Velocity in Dilution Tunnel - vs	13.08 feet/second
Average Gas Flow Rate in Dilution Tunnel - Qsd	8364.6 dscf/hour
Average Delta p	0.048 inches H20
Total Time of Test	450 minutes

	AMBIENT	SAMPLE TRAIN 1	SAMPLE TRAIN 2	FIRST HOUR FILTER (TRAIN 1)
Total Sample Volume - Vm	0.000 cubic feet	68.038 cubic feet	67.824 cubic feet	9.022 cubic feet
Average Gas Meter Temperature	77 degrees Fahrenheit	77 degrees Fahrenheit	78 degrees Fahrenheit	77 degrees Fahrenheit
Total Sample Volume (Standard Conditions) - Vmstd	0.000 dscf	64.509 dscf	63.757 dscf	8.554 dscf
Total Particulates - m_n	0 mg	1.2 mg	1.5 mg	0.3 mg
Particulate Concentration (dry-standard) - C_r/C_s	0.000000 grams/dscf	0.00002 grams/dscf	0.00002 grams/dscf	0.00004 grams/dscf
Total Particulate Emissions - E_T	0.00 grams	1.17 grams	1.48 grams	0.29 grams
Particulate Emission Rate	0.00 grams/hour	0.16 grams/hour	0.20 grams/hour	0.29 grams/hour
Emissions Factor		0.27 g/kg	0.34 g/kg	0.32 g/kg
Difference from Average Total Particulate Emissions		0.15 grams	0.15 grams	
	Dual Train Comparison Results Are Acceptable			

	FINAL AVERAGE RESULTS
Complete Test Run	
Total Particulate Emissions - E_T	1.32 grams
Particulate Emission Rate	**0.18 grams/hour**
Emissions Factor	0.30 grams/kg
First Hour Emissions	
Total Particulate Emissions - E_T	0.29 grams
Particulate Emission Rate	0.29 grams/hour
Emissions Factor	0.32 grams/kg
7.5% of Average Total Particulate Emissions	0.10 grams

	QUALITY CHECKS
Filter Temps < 90 °F	OK
Filter Face Velocity (47 mm)	OK
Dryer Exit Temp < 80F	OK
Leakage Rate	OK
Ambient Temp (55-90°F)	OK
Negative Probe Weight Eval.	OK
Pro-Rate Variation	OK
Stove Surface ΔT	OK

Technician Signature:

Wood Heater Efficiency Results - CSA B415.1

Manufacturer: Valley Comfort
Model: 20.2
Date: 08/27/17
Run: 7
Control #: 0142WS013E
Test Duration: 450
Output Category: I

Technician Signature: _____

Test Results in Accordance with CSA B415.1-09

	HHV Basis	LHV Basis
Overall Efficiency	80.6%	87.1%
Combustion Efficiency	97.9%	97.9%
Heat Transfer Efficiency	82%	89.0%

Output Rate (kJ/h)	9,328	8,849	(Btu/h)
Burn Rate (kg/h)	0.58	1.29	(lb/h)
Input (kJ/h)	11,569	10,974	(Btu/h)

Test Load Weight (dry kg)	4.38	9.65	dry lb
MC wet (%)	16.78224688		
MC dry (%)	20.17		
Particulate (g)	0.18		
CO (g)	157		
Test Duration (h)	7.50		

Emissions	Particulate	CO
g/MJ Output	0.00	2.24
g/kg Dry Fuel	0.04	35.86
g/h	0.02	20.94
lb/MM Btu Output	0.01	5.22

Air/Fuel Ratio (A/F)	15.80

VERSION: 2.2 12/14/2009

OMNI-Test Laboratories, Inc. **ASTM E2780 Wood Heater Run Sheets**

Client: **Valley Comfort Systems, Inc.** Project Number: **142WS01E** Run Number: 7
Model: **30.2 Series** Tracking Number: 2253 Date: 8/28
Test Crew: **B. Davis**
OMNI Equipment ID numbers: 464,410,132,576,318,432,419,371,372,432,296-T55,567,413,592

Wood Heater Run Notes

Air Control Settings

Primary:

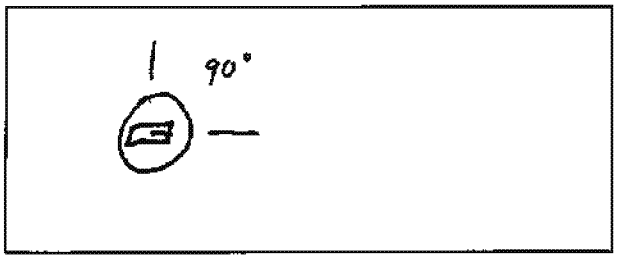

Secondary: fixed

Tertiary/Pilot: NA

Fan: Low

Preburn Notes

Time	Notes
60	Raked coal

Test Notes

Sketch test fuel configuration:

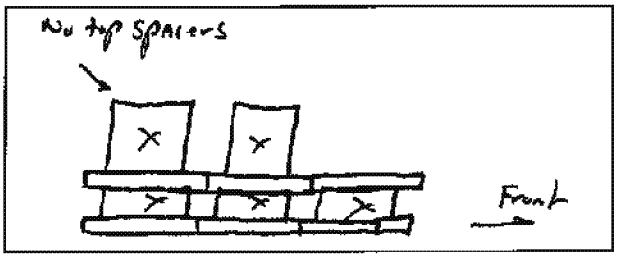

Start up procedures & Timeline:

Bypass: closed on fire test
Fuel loaded by: 25 seconds
Door closed at: 27 seconds
Primary air: fully open until slow then set to test setting

Notes: Fan off for first 30 min: Then turned to low

Time	Notes
60	changed Front filter at train A.

Technician Signature: [signature] Date: 9/6/17

OMNI-Test Laboratories, Inc. **ASTM E2780 Wood Heater Run Sheets**

Client: Valley Comfort Systems, Inc. Project Number: 142WS013E Run Number: 7
Model: 30.2 Series Tracking Number: 2253 Date: 8/18/17
Test Crew: B. Davis
OMNI Equipment ID numbers: 464,410,132,576,318,432,419,371,372,432,296-T55,567,413,592

Wood Heater Fuel Data

Fuel: Douglas fir, untreated and air dried, standard grade or better dimensional lumber

Pre-Burn Fuel

Calibration: Cal Value (1) = 12% Actual Reading 12
Cal Value (2) = 22% Actual Reading 22

Piece:	Length:	Reading:	Piece:	Length:	Reading:
1	13.0 in	19.0	7	13.0 in	19.2
2	13.0 in	21.9	8	13.0 in	20.0
3	13.0 in	22.3	9	13.0 in	20.0
4	13.0 in	22.5	10	13.0 in	20.1
5	13.0 in	20.3	11	in	
6	13.0 in	21.9	12	in	

Total Pre-Burn Fuel Weight: 14.3 Pre-Burn Fuel Average Moisture: 20.72

Time (clock): 0730 Room Temperature (F): 70 Initials: [illegible]

Test Fuel

Firebox Volume (ft³): 1.82 Test Fuel Piece Length (in): 13.0
Load Weight Range (lb): Total Wet Fuel Load Weight (lb): 11.60

Fuel Type & Amount: 2 x 4: 3 4 x 4: 2
Weight (with spacers): 4.98 Weight (with spacers): 6.62

Piece:	Weight (lbs):	Moisture Readings (%DB):			Fuel Type:
1	1.22	20.4	19.3	19.3	2x4
2	1.26	20.5	19.5	19.2	2x4
3	1.26	19.2	19.1	18.8	2x4
4	3.14	21.9	21.9	22.3	4x4
5	3.08	22.6	19.0	19.5	4x4
6					
7					

Spacer Moisture Readings (%DB)

12.3	18.1	17.0	16.0				
13.4	12.3	10.2	17.9				
13.0	18.1	17.6	16.0				
12.7	17.2	15.7	17.3				

Time (clock): 0740 Room Temperature (F): 70 Initials: BA

Technician Signature: [illegible] Date: 8/22/17

ASTM E2780 Wood Heater Run Sheets

Client: Valley Comfort Systems, Inc. Project Number: 142WS014E Run Number: 7
Model: 30.1 Series Tracking Number: 2253 Date: 8/28/17
Test Crew: B. Davis
OMNI Equipment ID numbers: 464,410,132,576,318,432,419,371,372,432,296-T55,567,413,592

Wood Heater Supplemental Data

Start Time: 0958 Booth #: N/A (site testing)

Stop Time: 1728

Stack Gas Leak Check:

Initial: good Final: good

Sample Train Leak Check:

A: 0.0 @ 5" "Hg
B: 0.0 @ 8" "Hg

Calibrations: Span Gas CO_2: 17.00 CO: 4.27

	Pre Test		Post Test	
	Zero	Span	Zero	Span
Time	0939	0940	1729	1729
CO_2	0.01	17.00	-0.29	16.87
CO	0.000	4.27	-0.017	4.171

Air Velocity (ft/min): Initial: 250 Final: 250
Scale Audit (lbs): Initial: 10.0 Final: 10.0
Pitot Tube Leak Test: Initial: good Final: good
Stack Diameter (in): 6"
Induced Draft: 0.0
% Smoke Capture: 100%
Flue Pipe Cleaned Prior to First Test in Series:
Date: 8/24/17 Initials: DA

	Initial	Middle	Ending
P_b (in/Hg)	29.94	29.83	29.77
RH (%)	26.7	35.6	34.8
Ambient (°F)	72	75	76

Background Filter Volume: N/A

Tunnel Traverse		
Microtector Reading	dP (in H_2O)	T(°F)
1	.030	79
2	.046	79
3	.032	79
4	.024	79
5	.030	79
6	.044	79
7	.044	79
8	.030	79
Center:		
	.048	79

Tunnel Static Pressure (in H_2O):	
Beginning of Test	End of Test
-0.17	-0.17

Technician Signature: [signature] Date: 8/27/17

Section 4

Quality Assurance/Quality Control
Sample Analysis
Calibrations
Example Calculations

QUALITY ASSURANCE/QUALITY CONTROL

OMNI follows the guidelines of ISO/IEC 17025, "General Requirements for the Competence of Testing and Calibration Laboratories," and the quality assurance/quality control (QA/QC) procedures found in OMNI's Quality Assurance Manual.

OMNI's scope of accreditation includes, but is not limited to, the following:

- ANSI (American National Standards Institute) for certification of product to safety standards.
- To perform product safety testing by the International Accreditation Service, Inc. (formerly ICBO ES) under accreditation as a testing laboratory designated TL-130.
- To perform product safety testing as a "Certification Organization" by the Standards Council of Canada (SCC).
- Serving as a testing laboratory for the certification of wood heaters by the U.S. Environmental Protection Agency.

This report is issued within the scope of OMNI's accreditation. Accreditation certificates are available upon request.

The manufacturing facilities and quality control system for the production of the Blaze King 20.2 Series at Valley Comfort Systems Inc. were evaluated to determine if sufficient to maintain conformance with OMNI's requirements for product certification. OMNI has concluded that the manufacturing facilities, processes, and quality control system are adequate to produce the appliance congruous with the standards and model codes to which it was evaluated.

This report shall not be reproduced, except in full, without the written approval of OMNI-Test Laboratories, Inc.

SAMPLE ANALYSIS

Analysis Worksheets

Tared Filter, Probe, and O-Ring Data

OMNI-Test Laboratories, Inc. **ASTM E2780Wood Heater Run Sheets**

Client: **Valley Comfort Systems, Inc.** Project Number: **142WS013E** Run Number: **1**

Model: **20.2 Series** Tracking Number: **2253** Date: **8/22/17**

Test Crew: **A. Kravitz**

OMNI Equipment ID numbers: 464,410,132,576,318,432,419,371,372,432,296-T55,567,413,592

ASTM E2515 Lab Sheet

Assembled By:

A. Kravitz

Date/Time in Dessicator:

8/26/17

	Weighing #1	Weighing #2	Weighing #3	Weighing #4	Weighing #5
Date/Time:	8/31/17	9/1/17	9/4/17	9/11/17	9/12/17
R/H %:	18.8	18.8	22.8	13.2	11.4
Temp:	76.1	75.2	71.0	74.1	77.3
200 mg Audit:	500.1	500.0	500.1	N/A	N/A
2 g Audit:	1999.8	1999.8	1999.8	1999.9	1999.8
100 g Audit:	99997.8	99997.9	N/A	N/A	N/A
Initials:	A	Am	A	A	A

Train	Element	ID #	Tare (mg)	Weight (mg)	Weight (mg)	Weight (mg)	Weight (mg)	Weight (mg)
A (First Hour)	Front Filter	D225	119.5	120.6	120.5	–		
	Rear Filter	N/A						
	Probe	N/A						
	O-Ring Set	N/A						
A (Remai-nder)	Front Filter	D226	121.5	122.6	122.6	–		
	Rear Filter	D227	120.2	120.6	120.5	–		
	Probe	3	116010.6	116010.5	116010.6	–		
	O-Ring Set	R501	3285.3	3287.3	3286.9	3286.9	3285.4	3285.3
B	Front Filter	D228	121.9	123.7	123.7	–		
	Rear Filter	D229	119.8	119.7	119.7	–		
	Probe	22	114344.5	114344.6	114344.6	–		
	O-Ring Set	R502	3423.5 ~~3384.0~~	3426.2	3426.0	–	3423.9	3423.1
BG	Filter	N/A						

Technician Signature: [signature] Date: 9/4/17 9/12/17

OMNI-Test Laboratories, Inc. **ASTM E2780Wood Heater Run Sheets**

Client: **Valley Comfort Systems, Inc.** Project Number: **142WS013E** Run Number: **2**

Model: **20.2 Series** Tracking Number: **2253** Date: **8/23/17**

Test Crew: **A. Kravitz**

OMNI Equipment ID numbers: 464,410,132,576,318,432,419,371,372,432,296-T55,567,413,592

ASTM E2515 Lab Sheet

Assembled By:

A. Kravitz

Date/Time in Dessicator:

8/26/17

	Weighing #1	Weighing #2	Weighing #3	Weighing #4	Weighing #5
Date/Time:	8/31/17	9/11/17	9/4/17	9/11/17	9/12/17
R/H %:	19.8	19.8	23.8	13.2	11.4
Temp:	76.1	75.2	77.0	74.1	77.3
200 mg Audit:	500.1	500.0	500.1	N/A	N/A
2 g Audit:	1999.8	1999.8	1999.8	1999.9	1999.8
100 g Audit:	99997.8	99997.9	N/A	N/A	N/A
Initials:	A	AK	A	A	A

Train	Element	ID #	Tare (mg)	Weight (mg)	Weight (mg)	Weight (mg)	Weight (mg)	Weight (mg)
A (First Hour)	Front Filter	D231	121.5	123.2	123.0	–		
	Rear Filter	N/A						
	Probe	N/A						
	O-Ring Set	N/A						
A (Remainder)	Front Filter	D232	122.0	122.8	122.9	–		
	Rear Filter	D233	120.5	120.5	120.3	–		
	Probe	27	114274.9	114274.9	114274.9	–		
	O-Ring Set	R503	3298.5	3300.4	3300.3	–	3298.7	3298.8
B	Front Filter	D234	121.9	124.2	127.9	123.9		
	Rear Filter	D235	121.2	121.1	121.1	–		
	Probe	29	114278.9	114278.9	114278.9	–		
	O-Ring Set	R504	3384.0	3387.3	3387.2	–	3384.9	3384.9
BG	Filter	N/A						

Technician Signature: AK Date: ~~9/4/17~~ 9/12/17

ASTM E2780Wood Heater Run Sheets

Client: **Valley Comfort Systems, Inc.** Project Number: **142WS013E** Run Number: **3**
Model: **20.2 Series** Tracking Number: **2253** Date: **8/23/17**
Test Crew: **A. Kravitz**
OMNI Equipment ID numbers: 464,410,132,576,318,432,419,371,372,432,296-T55,567,413,592

ASTM E2515 Lab Sheet

Assembled By:

A. Kravitz

Date/Time in Dessicator:

8/28/17

	Weighing #1	Weighing #2	Weighing #3	Weighing #4	Weighing #5
Date/Time:	8/31/17	9/1/17	9/4/17	9/11/17	9/12/17
R/H %:	18.8	18.8	22.8	13.2	11.4
Temp:	76.1	75.2	71.0	74.1	72.3
200 mg Audit:	500.1	500.0	500.1	N/A	N/A
2 g Audit:	1999.9	1999.8	1999.8	1999.9	1999.8
100 g Audit:	99997.8	99997.9	N/A	N/A	N/A
Initials:	A	AM	A	A	A

Train	Element	ID #	Tare (mg)	Weight (mg)	Weight (mg)	Weight (mg)	Weight (mg)	Weight (mg)
A (First Hour)	Front Filter	D236	119.1	121.8	121.5	121.5		
	Rear Filter	N/A						
	Probe	N/A						
	O-Ring Set	N/A						
A (Remainder)	Front Filter	D237	122.9	123.7	123.4	123.4		
	Rear Filter	D238	121.4	119.3	119.1	—		
	Probe	30	114330.5	114330.4	114330.5	—		
	O-Ring Set	R505	3337.9	3340.7	3340.8	—	3340.1	3340.1
B	Front Filter	D239	120.1	122.8	122.7	—		
	Rear Filter	D240	122.0	121.6	121.6	—		
	Probe	31	114369.6	114369.7	114369.7	—		
	O-Ring Set	R506	4158.8	4161.0	4160.9	—	4160.2	4160.3
BG	Filter	N/A						

Technician Signature: [signature] Date: 9/12/17

ASTM E2780Wood Heater Run Sheets

Client: **Valley Comfort Systems, Inc.** Project Number: **142WS013E** Run Number: **4**
Model: **20.2 Series** Tracking Number: **2253** Date: **8/24/17**
Test Crew: **A. Kravitz**
OMNI Equipment ID numbers: 464,410,132,576,318,432,419,371,372,432,296-T55,567,413,592

ASTM E2515 Lab Sheet

Assembled By:

A. Kravitz

Date/Time in Dessicator:

8/26/17

	Weighing #1	Weighing #2	Weighing #3	Weighing #4	Weighing #5
Date/Time:	8/31/17	9/1/17	9/4/17	9/11/17	9/12/17
R/H %:	19.8	19.8	22.8	13.2	11.4
Temp:	76.1	75.2	77.0	74.1	77.3
200 mg Audit:	500.1	500.0	500.1	N/A	N/A
2 g Audit:	1999.8	1999.8	1999.8	1999.9	1999.8
100 g Audit:	99997.8	99997.9	N/A	N/A	N/A
Initials:	A	AM	A	A	A

Train	Element	ID #	Tare (mg)	Weight (mg)	Weight (mg)	Weight (mg)	Weight (mg)	Weight (mg)
A (First Hour)	Front Filter	D241	120.3	121.0	120.7	120.7		
	Rear Filter	N/A						
	Probe	N/A						
	O-Ring Set	N/A						
A (Remai-nder)	Front Filter	D242	122.2	123.0	122.8	—		
	Rear Filter	D243	122.1	121.8	121.9	—		
	Probe	32	114742.4	114742.2	114742.4	-		
	O-Ring Set	R507	3373.4	3375.1	3375.0	—	3374.0	3374.1
B	Front Filter	D244	120.5	122.0	122.1	—		
	Rear Filter	D245	122.7	122.6	122.4	—		
	Probe	35	114327.0	114329.1	114327.0	—		
	O-Ring Set	R508	3308.5	3310.1	3310.0	—	3308.9	3308.0
BG	Filter	N/A						

Technician Signature: [signature] Date: 9/4/17 9/12/17

OMNI-Test Laboratories, Inc. **ASTM E2780Wood Heater Run Sheets**

Client: **Valley Comfort Systems, Inc.** Project Number: **142WS013E** Run Number: **5**

Model: **20.2 Series** Tracking Number: **2253** Date: **8/25/17**

Test Crew: **A. Kravitz**

OMNI Equipment ID numbers: 464,410,132,576,318,432,419,371,372,432,296-T55,567,413,592

ASTM E2515 Lab Sheet

Assembled By:

A. Kravitz

Date/Time in Dessicator:

8/26/17

	Weighing #1	Weighing #2	Weighing #3	Weighing #4	Weighing #5
Date/Time:	8/31/17	9/1/17	9/4/17	9/11/17	9/12/17
R/H %:	19.8	19.8	22.8	13.2	11.4
Temp:	76.1	75.2	77.0	74.1	77.3
200 mg Audit:	500.1	500.0	500.1	N/A	N/A
2 g Audit:	1999.8	1999.8	1999.8	1999.9	1999.8
100 g Audit:	99997.8	99997.9	N/A	N/A	N/A
Initials:	A	A	A	A	A

Train	Element	ID #	Tare (mg)	Weight (mg)	Weight (mg)	Weight (mg)	Weight (mg)	Weight (mg)
A (First Hour)	Front Filter	D246	122.1	123.5	123.5	–		
	Rear Filter	N/A						
	Probe	N/A						
	O-Ring Set	N/A						
A (Remai-nder)	Front Filter	D247	123.1	123.9	123.7	–		
	Rear Filter	D248	121.2	121.1	121.1	–		
	Probe	36	114885.7	114885.8	114885.8	–		
	O-Ring Set	R509	3307.6	3308.9	3308.8	–	3307.7	3307.8
B	Front Filter	D249	119.8	121.6	121.5	–		
	Rear Filter	D250	122.0	120.7	120.4	120.4		
	Probe	37	114466.0	114465.9	114466.0	–		
	O-Ring Set	R510	4091.7	4094.4	4094.4	–	4093.6	4093.6
BG	Filter	N/A						

Technician Signature: [signature] Date: ~~9/4/17~~ 9/12/17

OMNI-Test Laboratories, Inc.

ASTM E2780Wood Heater Run Sheets

Client Valley Comfort Systems, Inc. Project Number 142WS013E Run Number 6
Model 20.2 Series Tracking Number 2253 Date 8/26/17
Test Crew A. Kravitz
OMNI Equipment ID numbers 464,410,132,576,318,432,419,371,372,432,296,755,567,413,592

ASTM E2515 Lab Sheet

Assembled By:

A. Kravitz

Date/Time in Dessicator:

8/26/17

	Weighing #1	Weighing #2	Weighing #3	Weighing #4	Weighing #5
Date/Time	8/26/17	9/1/17	9/4/17	9/11/17	9/12/17
RH %	19.8	19.8	22.8	17.2	11.4
Temp	76.1	75.2	77.0	74.1	77.3
20% rm Avgt	500.1	500.0	500.1	N/A	N/A
Δ g Avgt	1999.8	1999.8	1999.8	1999.9	1999.9
100% Avgt	99997.8	99997.9	N/A	N/A	N/A
Initials	A	A	A	A	A

Train	Element	ID #	Tare (mg)	Weight (mg)	Weight (mg)	Weight (mg)	Weight (mg)	Weight (mg)
A (First Run)	Front Filter	D251	121.7	123.8 ~~124.7~~ A	123.7 ~~124.7~~ A			
	Rear Filter	N/A						
	Probe	N/A						
	O-Ring Set	N/A						
A (Reveal cast)	Front Filter	D252	120.1	121.1	121.1			
	Rear Filter	D253	121.9	120.3	120.3			
	Probe	38	114151.3	114151.3	114151.4			
	O-Ring Set	R511	4139.2	4144.4	4144.5	4141.7	4141.6	
B	Front Filter	D254	121.4	124.1 ~~123.4~~ A	124.1 ~~123.4~~ A			
	Rear Filter	D255	122.4	121.7	121.6			
	Probe	58	117066.6	117066.6	117066.7			
	O-Ring Set	R512	4175.7	4178.3	4178.2	4177.6	4177.5	
BG	Filter	N/A						

Technician Signature: [signature] Date: 9/1/17 9/12/17

OMNI-Test Laboratories, Inc. **ASTM E2780 Wood Heater Run Sheets**

Client: **Valley Comfort Systems, Inc.** Project Number: **142WS01AE** Run Number: 7

Model: **30.2 Series** Tracking Number: 2253 Date: 8/28/17

Test Crew: **B. Davis**

OMNI Equipment ID numbers: 464,410,132,576,318,432,419,371,372,432,296-T55,567,413,592

ASTM E2515 Lab Sheet

Assembled By: B Davis

Date/Time In Dessicator: 9/1/17 0530

	Weighing #1	Weighing #2	Weighing #3	Weighing #4	Weighing #5
Date/Time:	9/5/17	9/6/17	9/7/17		
R/H %:	20.2	16.7	17.3		
Temp:	78	77	77		
200 mg Audit:	0.2000	0.2000	0.2000		
2 g Audit:	1.9998	1.9998	1.9999		
100 g Audit:	99.9977	99.9976	99.9977		
Initials:	DA	DC	DA		

Train	Element	ID #	Tare (mg)	Weight (mg)	Weight (mg)	Weight (mg)	Weight (mg)	Weight (mg)
A (First Hour)	Front Filter	D267	121.6	121.9	121.9	✓		
	Rear Filter							
	Probe							
	O-Ring Set							
A (Remainder)	Front Filter	D270 D269	122.4 121.9	243.4	243.4	✓		
	Rear Filter	D268	121.9	121.9	121.8	✓		
	Probe	64	118208.3	118208.6	118208.6	✓		
	O-Ring Set	R515	3318.7	3318.4	3318.2	✓ DA ~~3317~~.9		
B	Front Filter	D271	119.7	121.0	120.9	✓		
	Rear Filter	D272	122.0	121.7	121.8	✓		
	Probe	65	117084.4	117085.1	117084.9	✓		
	O-Ring Set	R516	3296.8	3296.7	3296.4	3296.6	✓	
BG	Filter							

Technician Signature: [signature] Date: 9/6/17

Tare Sheet: (check one) Probes_____ 47mm Filters_____ 100mm Filters_____ O-Ring Pair ✓

Prepared By: J. Bu Han Balance ID #: 637 Thermohygrometer ID #: 592 Audit Weight ID #/Mass: 983A / 2000 mg

Placed in Dessicator: Date: 8/9/2017 Time: 4:30 pm	Date: 8/15/17 Time: 10:27 RH %: 18.6 T (°F): 72.1 Audit: 1.9999	Date: 8/16/17 Time: 10:08 RH %: 14.1 T (°F): 73.0 Audit: 1.9999	Date: 8/17/17 Time: 0836 RH %: 12.2 T (°F): 71.5 Audit: 1.9999	Date: Time: RH %: T (°F): Audit:	Date Used	Project Number	Run No.
ID #							
R501	3285.4	3285.3			8/22/17	0142WS0BE	1
R502	3423.4	3423.3			↓	↓	↓
R503	3298.6	3298.5			8/23/17		2
R504	3384.1	3384.0			↓		↓
R505	3337.9	3337.9					3
R506	4158.9	4158.8			↓		↓
R507	3373.5	3373.4			8/24/17		4
R508	3308.6	3308.5			↓		↓
R509	3307.5	3307.6			8/25/17		5
R510	4091.7	4091.7			↓		↓
R511	4139.4	4139.2					6
R512	4175.8	4175.7			↓	↓	↓
R513	4104.4	4104.6					
R514	3355.5	3355.9	3355.8				
R515	3318.7	3318.7			8/28/17		7
R516	3296.7	3296.8			↓	↓	↓
R517	3313.3	3313.4					
R518	3366.2	3366.4					
R519	3320.9	3321.5	3321.3				
R520	4081.4	4081.5					
	Initials: BC	Initials: BC	Initials: BC	Initials:			

Final Technician Signature: [signature] Date:_____ Evaluator signature: [signature]

Control No. P-SFDP-0002.xls, Effective date: 2/1/2017

Tare Sheet: (check one) **Probes** ✓ **47mm Filters**_____ **100mm Filters**_____ **O-Ring Pair**_____

Prepared By: S. Bullan Balance ID #: 637 Thermohygrometer ID #: 592 Audit Weight ID #/Mass: 2834 / 100g

Placed in Dessicator: Date: 8/9/17 Time: 4:20	Date: 8/15/17 Time: 1047 RH %: 19.6 T (°F): 72.1 Audit: 99.9980	Date: 8/16/17 Time: 10:08 RH %: 14.1 T (°F): 73.0 Audit: 99.9979	Date: 8/17/17 Time: 0836 RH %: 12.2 T (°F): 71.5 Audit: 99.9980	Date: 8/18/17 Time: 0815 RH %: 11.4 T (°F): 71.4 Audit: 99.9979	Date Used	Project Number	Run No.
ID #							
3	116010.6	116010.6	–		8/22/17	0142W5013E	1
22	114345.1	114344.7	114344.5	–	↓	↓	↓
27	114274.7	114274.9	–		8/23/17		2
29	114279.2	114278.9	114278.7	–			↓
30	114330.4	114330.5	–				3
31	114370.4	114370.0	114369.7	114369.6	–		↓
32	114742.3	114742.4	–		8/24/17		4
35	114326.9	114327.0	–		↓		↓
36	114885.9	114885.7	–		8/25/17		5
37	114465.9	114466.0	–				↓
38	114151.4	114151.3	–				6
58	117067.2	117066.9	117066.5	117066.6	–		↓
64	118208.4	118208.3	–		8/28/17		7
65	117085.3	117084.9	117084.5	117084.4	–		↓
66	118460.3	118460.1	–				
67	117760.5	117760.3	–				
68	116806.0	116806.2	–				
69	117372.7	117372.8	–				
	Initials: BR	Initials: BR	Initials: AK	Initials:			

Final Technician Signature: [signature] Date:_____ Evaluator signature: [signature]

Control No. P-SFDP-0002.xls, Effective date: 2/1/2017

Tare Sheet: Probes___ 47mm Filters ✓ 100mm Filters___ O-Ring Pair___

Date/time Placed in Dessicator: 8/22/17 8:45

Prepared By: S. Bahan

Analytical Balance ID #: ~~244~~ 637 SB 8/10

Thermohygrometer ID #: 592

Audit Weight ID #/Mass: 002.83A - 1 200mg

ID #	Date: 8/15/17 Time: 0934 RH %: 10.5 T (°F): 71.6 Audit: .2008	Date: 8/16/17 Time: 0930 RH %: 10.5 T (°F): 72.8 Audit: 0.2001	Date: Time: RH %: T (°F): Audit:	Date: Time: RH %: T (°F): Audit:	Date Used	Project Number	Run No.
D225	119.5	119.5			8/22/17	0142WS0135	1
D226	121.5	121.5					
D227	120.3	120.2					
D228	122.0	121.9					
D229	119.9	119.8					
D230	121.7	121.5					
D231	121.4	121.5			8/23/17	0142WS0135	2
D232	122.1	122.0					
D233	120.3	120.5					
D234	121.8	121.9					
D235	121.3	121.2					
D236	118.9	119.1					3
D237	122.9	122.9					
D238	121.3	121.4					
D239	120.0	120.1					
D240	122.1	122.0					
D241	120.2	120.3			8/24/17		4
D242	122.4	122.2					
D243	122.0	122.1					
D244	120.3	120.5					
D245	122.6	122.7					
D246	122.0	122.1			8/25/17		5
	Initials: BN	Initials: BN	Initials:	Initials:			

Final Technician Signature: [signature] Date:

Evaluator signature: [signature]

Control No. P-SFDP-0001.xls, Effective date: 9/9/2015

Tare Sheet: (check one) Probes_____ 47mm Filters ✓ 100mm Filters_____ O-Ring Pair_____

Prepared By: S. Buttram Balance ID #: 637 Thermohygrometer ID #: 592 Audit Weight ID #/Mass: 285 A / 200mg

Placed in Dessicator: Date: 8/10/2017 Time: 10:30	Date: 8/15/17 Time: 0934 RH %: 10.5 T (°F): 71.6 Audit: .2001	Date: 8/16/17 Time: 0934 RH %: 10.5 T (°F): 72.8 Audit: 0.2001	Date: Time: RH %: T (°F): Audit:	Date: Time: RH %: T (°F): Audit:	Date Used	Project Number	Run No.
ID #							
D247	123.1	123.1			8/25/17	0142W3013E	5
D248	121.1	121.2			↓	↓	↓
D249	120.0	119.8					
D250	121.9	122.0					
D251	121.5	121.7					6
D252	119.9	120.1					
D253	121.9	121.9					
D254	BR ~~120.7~~ 121.2	121.4					
D255	122.4	122.4					
D256	119.2	119.4					
D257	121.2	121.0					
D258	119.9	119.8					
D259	122.3	122.3					
D260	121.0	121.0					
D261	119.9	119.7					
D262	122.5	122.5					
D263	121.6	121.5					
D264	120.5	120.7					
D265	123.4	123.4					
D266	121.4	121.4					
	Initials: BR	Initials: BR	Initials:	Initials:			

Final Technician Signature: [signature] Date:_____ Evaluator signature: [signature]

Control No. P-SFDP-0002.xls, Effective date: 2/1/2017

Tare Sheet: (check one) Probes_____ 47mm Filters ✓ 100mm Filters_____ O-Ring Pair_____

Prepared By: S. Button Balance ID #: 637 Thermohygrometer ID #: 592 Audit Weight ID #/Mass: 2834 / 200mg

Placed in Dessicator: Date: 8/10/2017 Time: 10:20	Date: 8/15/17 Time: 0934 RH %: 10.5 T (°F): 71.6	Date: 8/16/17 Time: 0934 RH %: 10.5 T (°F): 72.1	Date: 8/17/17 Time: 0836 RH %: 12.2 T (°F): 71.5	Date: Time: RH %: T (°F):	Date Used	Project Number	Run No.
ID #	Audit: 0.2001	Audit: 0.2001	Audit: 0.2001	Audit:			
D267	121.7	121.6			8/28/17	0142WS013E	7
D268	121.8	121.9			↓	↓	↓
D269	120.3	120.3					
D270	122.3	122.4					
D271	119.5	119.7					
D272	122.1	122.0					
D273	121.7	121.9			8-29-17	0142WS014E	1
D274	119.3	119.3			↓	↓	↓
D275	122.3	122.4					
D276	121.6	121.6					
D277	119.4	119.6					
D278	121.3	121.3			8-30-17		2
D279	122.7	122.5			↓	↓	↓
D280	121.3	120.8	120.8				
D281	122.6	122.7					
D282	121.9	122.0					
D283	119.7	119.7			8-31-17		3
D284	122.8	122.9			↓	↓	↓
D285	120.4	120.2					
D286	121.4	121.3					
	Initials: BL	Initials: BL	Initials: BL	Initials:			

Final Technician Signature: [signature] Date: 8/17/17 Evaluator signature: [signature]

Control No. P-SFDP-0002.xls, Effective date: 2/1/2017

CALIBRATIONS

Equipment used for Methods EPA 28R, ASTM E2515, ASTM E2780

ID #	Lab Name/Purpose	Log Name	Attachment Type
132	10 lb Weight	Stanley Tape Measure	Calibration Log
296-T55	Tape Measure	Weight Standard, 10 lb.	Calibration Log
318	Digital thermometer	Fluke 52II	Calibration Log
371	Sample Box / Dry Gas Meter	Apex Automated Emissions Sampling Box	Calibration Log
372	Sample Box / Dry Gas Meter	Apex Automated Emissions Sampling Box	Calibration Log
410	Microtector	Dwyer Microtector	Calibration Certificate
413	Dry Gas Meter	Dry Gas Meter with Digital Readout	Calibration Log
419	Combustion Gas Analyzer	Infrared Gas Analyzer	N/A - See Test Run Notes
432	Moisture Meter Calibrator	Delmhorst Moisture Content Calibrator	Calibration Log
464	Data Logging System	NI Fieldpoint Rail & Software	N/A – see 371 & 372
559	Vaneometer	Dwyer Vaneometer	Equipment Record
567	Stopwatch	Robic Stopwatch SC-606W	Calibration Log
576	Caliper, 6”	6" Dial Caliper	Calibration Certificate
592	Thermohygrometer	Omega Digital Thermohygrometer	Calibration Log

SCALE WEIGHT CALIBRATION DATA SHEET

Weight to be calibrated: 10 lb

ID Number: 132

Standard Calibration Weight: 10 lb

ID Number: 256

Scale Used: MTW-150K

ID Number: 353

Date: 2/19/3 By: A. Kravitz

Standard Weight (A) (Lb.)	Weight Verified (B) (Lb.)	Difference (A - B)	% Error
10.0	10.0	0.0	Ø

*Acceptable tolerance is 1%.

This calibration is traceable to NIST using calibrated standard weights.

Technician signature: Date: 2/19/13

Certificate of Calibration

Certificate Number: **543402**

JJ Calibrations, Inc.
7007 SE Lake Rd
Portland, OR 97267-2105
Phone 503.786.3005
FAX 503.786.2994

Omni-Test Laboratories
13327 NE Airport Way
Portland, OR 97230

PO: OTL-13-031
Order Date: 09/27/2013
Authorized By: N/A

0723.01
Calibration

Property #: OMNI-00283A
User: N/A
Department: N/A
Make: Troemner Inc
Model: 1mg-100g (Class F)
Serial #: 47883
Description: Mass Set, 21 Pc.
Procedure: DCN 500901
Accuracy: Class F

Calibrated on: 10/09/2013
*Recommended Due: 10/09/2018
Environment: 20 °C 41 % RH
As Received: Other - See Remarks
As Returned: Within Tolerance
Action Taken: Calibrated
Technician: 34

Remarks: * Any number of factors may cause the calibration item to drift out of calibration before the recommended interval has expired

Changed set from a Class 4 to a Class F per Jeremy Clark.
Received missing 1g weight.
Refer to attachment for measurement results.

Standards Used

Std ID	Manufacturer	Model	Nomenclature	Due Date	Trace ID
432A	Sartorius	C-44	Microbalance 5.1g	03/11/2014	517747
479A	Sartorius	MC210S	Scale, 210g	02/22/2014	517755
503A	Rice Lake	1mg-200g (Class O)	Mass Set	12/07/2013	517746
723A	Rice Lake	1mg-200g (Class O)	Mass Set	09/05/2014	540048

JJ Calibrations, Inc. certifies that this instrument has been calibrated in accordance with the JJ Calibrations Quality Assurance Manual with the stated procedure using standards that are traceable to the National Institute of Standards and Technology (NIST), or other National Measurement Institutes (NMI's), or by using natural physical constants, intrinsic standards or ratio calibration techniques. The quality system and this certificate are in compliance with ANSI/NCSL Z540-1-1994, ISO/IEC 17025-2005, ISO 10012-1, the ISO 9000 family and QS 9000. The expanded uncertainties of measurements for this calibration are based upon 95% (2 sigma) confidence limits. Unless otherwise stated, a test accuracy ratio (TAR) of 4:1, if achievable, is maintained. The results reported herein apply only to the calibration of the item described above. This report may not be reproduced, except in full, without prior written consent of JJ Calibrations, Inc.
JJ Calibrations, Inc. quality system has been assessed and accredited to ISO/IEC 17025:2005.

Reviewer

3 Issued 10/11/2013 Rev # 14

Inspector

Tape Measure Calibration Log

Place the calibrated 12" ruler under the tape measure and verify that each ½" (i.e. 1.5", 2", 2.5") between 0 and 36" is within 1/8".

Calibrated using OMNI-00281

Tape Measure Number	Description	Cal Dates				Technician Initials			
OMNI-00296-T55	Dewalt 16' Tape Measure	12/12/16				BR			
OMNI-00296-T56	Dewalt 25' Tape Measure	12/12/16				AL			
OMNI-00296-T59	Dewalt 25' Tape Measures	12/12/16				AL			

OMNI Environmental Services, Inc.
OMNI-Test Laboratories, Inc.

Thermocouple Readout Calibration Log

Date: 2/13/14 OMNI Meter Identification Number: OMNI-00318 Technician: Jeremy Clark

			Meter Response						Acceptable?		
			0	200	400	600	800	1000			
	Date	Calibration Meter ID		± 3EF*	± 6EF	± 9EF	± 12EF	± 15EF	Yes	No	Initials
T1	2/13/14	OMNI-00373	0.2	200.0	400.1	600.1	800.1	1001	✓		JC
T2	2/13/14	" "	0.3	200.0	400.1	600.1	800.1	1000	✓		JC
T1	2/3/15	OMNI-00373	-0.1	199.9	399.9	599.9	800.0	1000	✓		JC
T2	2/3/15	OMNI-00373	-0.1	199.9	400.0	600.0	800.1	1001	✓		JC
T1	2/29/16	OMNI-00373	0.3	200.1	400.2	600.2	800.1	1000	✓		BR
T2	2/29/16	OMNI-00373	0.1	200.1	400.1	600.3	800.4	1001	✓		BR
T1	3/9/17	OMNI-00373	-2.4	197.6	397.5	597.5	797.5	997.3	✓		BR
T2	3/9/17	OMNI-00373	-1.1	198.5	398.4	598.3	798.1	998.3	✓		BR

*Note: Acceptance Criteria are based on EPA Method 2 Section 4.3 (1.5% agreement of readings)

Technician signature: [signature] Date: 2/13/14

Thermal Metering System Calibration
Y Factor

Manufacturer:	Apex
Model:	XC-60-EP
Serial Number:	0702003
OMNI Tracking No.:	OMNI-00371
Calibrated Orifice:	☐Yes

Previous Calibration Comparision

Date	1/18/2017	Acceptable Deviation (5%)	Deviation
y Factor	1.001	0.05005	0.002
Acceptance	Acceptable		

Current Calibration

Acceptable y Deviation	0.020
Maximum y Deviation	0.005
Acceptable dH@ Deviation	N/A
Maximum dH@ Deviation	N/A
Acceptance	Acceptable

Average Gas Meter y Factor	Orifice Meter dH@
1.003	N/A

Calibration Date:	07/20/17	
Calibrated by:	B. Davis	
Calibration Frequency:	6 months	
Next Calibration Due:	1/20/2018	
Instrument Range:	1.000	cfm
Standard Temp.:	68	oF
Standard Press.:	29.92	"Hg
Barometric Press., Pb:	30.2	"Hg
Signature/Date:		7/21/2017

8/1/2017

Reference Standard *			
Standard Calibrator	Model	Standard Test Meter	
	S/N	OMNI-00001	
	Calib. Date	27-Oct-16	
	Calib. Value	0.9823	y factor (ref)

Calibration Parameters	Run 1	Run 2	Run 3
Reference Meter Pressure ("H2O), Pr	0.00	0.00	0.00
DGM Pressure ("H2O), Pd	3.29	1.70	1.00
Initial Reference Meter	824.4	829.7	838
Final Reference Meter	829.6	837.9	843.6
Initial DGM	0	0	0
Final DGM	5.069	8.146	5.572
Temp. Ref. Meter (°F), Tr	69.0	70.7	73.4
Temperature DGM (°F), Td	73.0	79.0	82.0
Time (min)	26.0	58.5	52.5
Net Volume Ref. Meter, Vr	5.200	8.200	5.600
Net Volume DGM, Vd	5.069	8.146	5.572
Gas Meter y Factor =	1.007	1.000	1.001
Gas Meter y Factor Deviation (from avg.)	0.005	0.003	0.002
Orifice dH@	N/A	N/A	N/A
Orifice dH@ Deviation (from avg.)	N/A	N/A	N/A

where:

1. Deviation = |Average value for all runs - current run value|

** 2. y = [Vr x (y factor (ref)) x (Pb + (Pr/ 13.6)) x (Td + 460)]/ [Vd x (Pb + (Pd / 13.6)) x (Tr + 460)]

** 3. dH@ = 0.0317 x Pd / (Pb (Td + 460)) x [(Tr + 460) x time) / Vr]^2

* Reference calibration is traceable to NIST through NIST Test # 40674, Kimble ASTM E1272, or NIST traceable laboratory

** Equations come from EPA Method 5

The uncertainty of measurement is ±0.14 ft^3/min. This is based on the reference standard having a TAR (Test Accuracy Ratio) of at least 4:1.

Temperature Calibration
EPA Method 28R, ASTM 2515

Booth:	Temperature Monitor Type:	Equipment Number:
E1	National Instruments Logger	00371, 00372

Reference Meter Equipment Number: 00373	Calibration Due Date: 8/02/17

Calibration Performed By:	Date:	Ambient Temperature:	Barometric Pressure:
B. Davis	7/24/17	68	30.02

Input Temperature (F)	Ambient	Meter A	Meter B	Filter A	Filter B	Tunnel	FB Interior
0	Ø	Ø	Ø	Ø	Ø	Ø	Ø
100	99	100	100	100	100	100	100
300	299	300	299	299	300	300	300
500	499	499	499	499	500	500	500
700	699	699	699	699	699	700	700
1000	999	999	999	999	999	1000	1000

Input (F)	FB Top	FB Bottom	FB Back	FB Left	FB Right	Imp A	Imp B	Cat	Stack
0	Ø	Ø	Ø	Ø	Ø	Ø	Ø	Ø	Ø
100	100	100	100	100	100	100	100	99	100
300	300	300	300	300	300	299	300	299	300
500	500	500	500	500	500	499	500	499	500
700	700	700	700	700	700	699	700	699	700
1000	1000	1000	1000	1000	1000	999	999	999	1000
1500								1499	
2000								1998	

Technician signature: _____ Date: 7/24/17

Reviewed By: _____ Date: 8/1/2017

DIFFERENTIAL PRESSURE GAUGE CALIBRATION DATA SHEET

Instrument to be calibrated: Pressure Transducer

Maximum Range: 0-2" WC ID Number: OMNI-00371

Calibration Instrument: Digital Manometer ID Number: OMNI-00633

Date: 7/24/17 By: B. Davis

This form is to be used only in conjunction with Standard Procedure C-SPC.

Range of Calibration Point ("WC)	Digital Manometer Input ("WC)	Pressure Gauge Response ("WC)	Difference (Input - Response)	% Error of Full Span*
0-20% Max. Range 0 - 0.4	-0.035	-0.028	0.007	0.35
20-40% Max. Range 0.4 - 0.8	-0.583	-0.577	0.006	0.30
40-60% Max. Range 0.8 – 1.2	-1.003	-0.998	0.005	0.25
60-80% Max. Range 1.2 – 1.6	-1.358	-1.352	0.006	0.30
80-100% Max. Range 1.6 – 2.0	-1.876	-1.871	0.005	0.25

*Acceptable tolerance is 4%.

The uncertainty of measurement is ±0.4" WC. This is based on the reference standard having a TAR (Test Accuracy Ratio) of at least 4:1.

Technician signature: _____ Date: 08/03/17

Reviewed by: _____ Date: 8/4/2017

Thermal Metering System Calibration
Y Factor

Manufacturer:	Apex
Model:	XC-60-EP
Serial Number:	0702004
OMNI Tracking No.:	OMNI-00372
Calibrated Orifice:	☐Yes

Previous Calibration Comparision

Date	1/18/2017	Acceptable Deviation (5%)	Deviation
y Factor	0.993	0.04965	0.004
Acceptance	Acceptable		

Current Calibration

Acceptable y Deviation	0.020
Maximum y Deviation	0.005
Acceptable dH@ Deviation	N/A
Maximum dH@ Deviation	N/A
Acceptance	Acceptable

Average Gas Meter y Factor	Orifice Meter dH@
0.997	N/A

Calibration Date:	07/21/17	
Calibrated by:	B. Davis	
Calibration Frequency:	6 months	
Next Calibration Due:	1/21/2018	
Instrument Range:	1.000	cfm
Standard Temp.:	68	oF
Standard Press.:	29.92	"Hg
Barometric Press., Pb:	30.2	"Hg
Signature/Date:		7/21/2017

8/1/2017

Reference Standard *			
Standard Calibrator	Model	Standard Test Meter	
	S/N	OMNI-00001	
	Calib. Date	27-Oct-16	
	Calib. Value	0.9823	y factor (ref)

Calibration Parameters	Run 1	Run 2	Run 3
Reference Meter Pressure ("H2O), Pr	0.00	0.00	0.00
DGM Pressure ("H2O), Pd	2.00	1.30	0.80
Initial Reference Meter	856.9	864	870.7
Final Reference Meter	863.9	870.6	877.902
Initial DGM	0	0	0
Final DGM	6.93	6.564	7.233
Temp. Ref. Meter (°F), Tr	78.2	79.1	79.0
Temperature DGM (°F), Td	85.0	87.0	88.0
Time (min)	38.5	46.0	60.0
Net Volume Ref. Meter, Vr	7.000	6.600	7.202
Net Volume DGM, Vd	6.93	6.564	7.233
Gas Meter y Factor =	**1.000**	**0.999**	**0.992**
Gas Meter y Factor Deviation (from avg.)	0.003	0.002	0.005
Orifice dH@	**N/A**	**N/A**	**N/A**
Orifice dH@ Deviation (from avg.)	N/A	N/A	N/A

where:

1. Deviation = |Average value for all runs - current run value|

** 2. y = [Vr x (y factor (ref)) x (Pb + (Pr/ 13.6)) x (Td + 460)]/ [Vd x (Pb + (Pd / 13.6)) x (Tr + 460)]

** 3. dH@ = 0.0317 x Pd / (Pb (Td + 460)) x [(Tr + 460) x time) / Vr]^2

* Reference calibration is traceable to NIST through NIST Test # 40674, Kimble ASTM E1272, or NIST traceable laboratory

** Equations come from EPA Method 5

The uncertainty of measurement is ±0.14 ft^3/min. This is based on the reference standard having a TAR (Test Accuracy Ratio) of at least 4:1.

Temperature Calibration
EPA Method 28R, ASTM 2515

Booth:	Temperature Monitor Type:	Equipment Number:
E1	National Instruments Logger	00371, 00372

Reference Meter Equipment Number: 00373	Calibration Due Date: 8/02/17

Calibration Performed By:	Date:	Ambient Temperature:	Barometric Pressure:
B. Davis	7/24/17	68	30.02

Input Temperature (F)	Ambient	Meter A	Meter B	Filter A	Filter B	Tunnel	FB Interior
0	Ø	Ø	Ø	Ø	Ø	Ø	Ø
100	99	100	100	100	100	100	100
300	299	300	299	299	300	300	300
500	499	499	499	499	500	500	500
700	699	699	699	699	699	700	700
1000	999	999	999	999	999	1000	1000

Input (F)	FB Top	FB Bottom	FB Back	FB Left	FB Right	Imp A	Imp B	Cat	Stack
0	Ø	Ø	Ø	Ø	Ø	Ø	Ø	Ø	Ø
100	100	100	100	100	100	100	100	99	100
300	300	300	300	300	300	299	300	299	300
500	500	500	500	500	500	499	500	499	500
700	700	700	700	700	700	699	700	699	700
1000	1000	1000	1000	1000	1000	999	999	999	1000
1500								1499	
2000								1998	

Technician signature: _____ Date: 7/24/17

Reviewed By: _____ Date: 8/1/2017

DIFFERENTIAL PRESSURE GAUGE CALIBRATION DATA SHEET

Instrument to be calibrated: Pressure Transducer

Maximum Range: 0-2" WC ID Number: OMNI-00372

Calibration Instrument: Digital Manometer ID Number: OMNI-00633

Date: 7/24/17 By: B. Davis

This form is to be used only in conjunction with Standard Procedure C-SPC.

Range of Calibration Point ("WC)	Digital Manometer Input ("WC)	Pressure Gauge Response ("WC)	Difference (Input - Response)	% Error of Full Span*
0-20% Max. Range 0 - 0.4	0.340	0.340	0	0
20-40% Max. Range 0.4 - 0.8	0.569	0.569	0	0
40-60% Max. Range 0.8 – 1.2	0.982	0.985	0.003	0.15
60-80% Max. Range 1.2 – 1.6	1.168	1.168	0	0
80-100% Max. Range 1.6 – 2.0	1.930	1.934	0.003	0.15

*Acceptable tolerance is 4%.

The uncertainty of measurement is ±0.4" WC. This is based on the reference standard having a TAR (Test Accuracy Ratio) of at least 4:1.

Technician signature: _____ Date: 08/03/17

Reviewed by: _____ Date: 8/4/2017

Certificate of Calibration

Certificate Number: **629694**

JJ Calibrations, Inc.
7007 SE Lake Rd
Portland, OR 97267-2105
Phone 503.786.3005
FAX 503.786.2994

Omni-Test Laboratories
13327 NE Airport Way
Portland, OR 97230

0723.01
Calibration

PO: 160099
Order Date: 08/18/2016
Authorized By: N/A

Property #: OMNI-00410
User: N/A
Department: N/A
Make: Dwyer
Model: 1430
Serial #: OMNI-00410
Description: Microtector
Procedure: 500908
Accuracy: ±0.00025" WC

Calibrated on: 08/29/2016
*Recommended Due: 08/29/2017
Environment: 19 °C 50 % RH
* As Received: Other - See Remarks
* As Returned: Limited
Action Taken: Calibrated
Technician: 34

Remarks: * Many factors may cause the unit to drift out of calibration before the recommended due date. Any reported error is the absolute value between the reference and the unit. Uncertainties include the effects of the unit.

Calibrated micrometer head only per Bruce Davis.

Limited Calibration - Calibrated micrometer head only.

Standards Used

Std ID	Manufacturer	Model	Nomenclature	Due Date	Trace ID
541A	Select	E8PED2	8 Piece Gage Block Set	11/24/2016	607288

Measurement Data

Parameter / Measurement Description	Range Unit	Reference	Min	Max	ᵗError	UUT	Uncertainty
Before/After							Accredited = ✓
Length							
	Inch	0.1300	0.129	0.131	0.000	0.130 Inch	1.1E-03 ✓
	Inch	0.3850	0.384	0.386	0.000	0.385 Inch	1.1E-03 ✓
	Inch	0.6150	0.614	0.616	0.000	0.615 Inch	1.1E-03 ✓
	Inch	0.8700	0.869	0.871	0.001	0.871 Inch	1.1E-03 ✓
	Inch	1.0000	0.999	1.001	0.001	1.001 Inch	1.1E-03 ✓

JJ Calibrations, Inc. certifies that this instrument has been calibrated in accordance with the JJ Calibrations Quality Assurance Manual with the stated procedure using standards that are traceable to the National Institute of Standards and Technology (NIST), or other National Measurement Institutes (NMI's), or by using natural physical constants, intrinsic standards or ratio calibration techniques. The quality system and this certificate are in compliance with ANSI/NCSL Z540-1-1994, ISO/IEC 17025-2005, ISO 10012-1, the ISO 9000 family and QS 9000. The expanded uncertainties of measurements for this calibration are based upon 95% (2 sigma) confidence limits. Unless otherwise stated, a test accuracy ratio (TAR) of 4:1, if achievable, is maintained. The results reported herein apply only to the calibration of the item described above. This report may not be reproduced, except in full, without prior written consent of JJ Calibrations, Inc.
JJ Calibrations, Inc. quality system has been assessed and accredited to ISO/IEC 17025:2005.

Reviewer

3 Issued 08/31/2016 Rev # 15

Stacy Heath
Inspector

Thermal Metering System Calibration
Y Factor

Manufacturer:	APEX Instruments
Model:	DGM-SK25DA-TL
Serial Number:	8004298
OMNI Tracking No.:	OMNI-00413
Calibrated Orifice:	☐Yes

Previous Calibration Comparision

Date	3/28/2017	Acceptable Deviation (5%)	Deviation
y Factor	0.997	0.04985	0.006
Acceptance	Acceptable		

Current Calibration

Acceptable y Deviation	0.020
Maximum y Deviation	0.016
Acceptable dH@ Deviation	N/A
Maximum dH@ Deviation	N/A
Acceptance	Acceptable

Average Gas Meter y Factor	Orifice Meter dH@
1.003	N/A

Calibration Date:	09/26/17	
Calibrated by:	B. Davis	
Calibration Frequency:	Six month	
Next Calibration Due:	3/26/2018	
Instrument Range:	1.000	cfm
Standard Temp.:	68	oF
Standard Press.:	29.92	"Hg
Barometric Press., Pb:	30.2	"Hg
Signature/Date:	9/26/17	
	9/27/17	

Reference Standard *			
Standard Calibrator	Model	Standard Test Meter	
	S/N	OMNI-00001	
	Calib. Date	27-Oct-16	
	Calib. Value	0.9823	y factor (ref)

Calibration Parameters	Run 1	Run 2	Run 3
Reference Meter Pressure ("H2O), Pr	-0.40	-0.24	-0.10
DGM Pressure ("H2O), Pd	0.00	0.00	0.00
Initial Reference Meter	118.005	104.503	111.9
Final Reference Meter	123.505	111.702	117.2
Initial DGM	0	0	0
Final DGM	5.313	7.032	5.273
Temp. Ref. Meter (°F), Tr	76.0	75.0	76.0
Temperature DGM (°F), Td	76.0	75.0	76.0
Time (min)	7.0	13.5	22.0
Net Volume Ref. Meter, Vr	5.500	7.199	5.300
Net Volume DGM, Vd	5.313	7.032	5.273
Gas Meter y Factor =	1.016	1.005	0.987
Gas Meter y Factor Deviation (from avg.)	0.013	0.002	0.016
Orifice dH@	N/A	N/A	N/A
Orifice dH@ Deviation (from avg.)	N/A	N/A	N/A

where:

1. Deviation = |Average value for all runs - current run value|

** 2. y = [Vr x (y factor (ref)) x (Pb + (Pr/ 13.6)) x (Td + 460)]/ [Vd x (Pb + (Pd / 13.6)) x (Tr + 460)]

** 3. dH@ = 0.0317 x Pd / (Pb (Td + 460)) x [(Tr + 460) x time) / Vr]^2

* Reference calibration is traceable to NIST through NIST Test # 40674, Kimble ASTM E1272, or NIST traceable laboratory

** Equations come from EPA Method 5

The uncertainty of measurement is ±0.14 ft^3/min. This is based on the reference standard having a TAR (Test Accuracy Ratio) of at least 4:1.

WOOD MOISTURE CONTENT CALIBRATION WORKSHEET

Moisture Content Standard OMNI ID #: 00432

Reference Moisture Content Standard: **OMNI # 00430**

Date	Temp.	Barometric Pressure	Fixed Moisture %	Fixed Moisture %	Observed Moisture %		Initials
5/20/2016	69°F	29.90 in Hg	22%	12%	22.0 %	12.0 %	AL
11/14/16	68°F	30.10 in Hg	22%	12%	22.0 %	12.0 %	DR
5/10/17	70°F	30.14 in Hg	22%	12%	22.0 %	12.0 %	AL
			22%	12%			
			22%	12%			
			22%	12%			
			22%	12%			
			22%	12%			
			22%	12%			
			22%	12%			
			22%	12%			
			22%	12%			
			22%	12%			
			22%	12%			
			22%	12%			
			22%	12%			
			22%	12%			
			22%	12%			

Notes: _____

Technician signature: _____ Date: 5/20/16

OMNI Track #	OMNI-00559
Equipment Name/Description	Vaneometer, Air Vel. Meter - Dwyer
Equipment S/N:	T36Z
Comments	New vane installed
Status	Active
Part #	480

Reference Standard:		YES	X	NO	(Check 'X' for answer)

Location of Equipment:	Cab 1
Calibration Vendor	OMNI in house
Type of Calibration	6 month
Calibration Period (Months)	6
Date of Last Calibration	5/10/2017
Date of Next Calibration	11/10/2017

Do the following:

1) Complete Calibration documentation
2) Complete top half of this form
3) Attach appropriate calibration forms and save in following location
   \\omni-serv\Test Equipment\Equipment\OMNI-XXXXX - Equipment Name
4) Repopulate database with updated information
5) Print, laminate and adhere calibration tag to equipment

Six Month
OMNI-00559
Vaneometer

Last Cal Date: **5/10/2017**
Due Date of Cal: **11/10/17**

Six Month
OMNI-00559
Vaneometer

Last Cal Date: **5/10/2017**
Due Date of Cal: **11/10/2017**

NIST Stopwatch Calibration, Time Proficiency Testing Procedure and Data Sheet

Date: 8/7/17 User/Technician: N. Sodergren ☒ Pass ☐ Fail

NIST traceable stopwatch *OMNI* tracking number: 00565 Last Cal: 06/27/2017

Stopwatch to be tested for time proficiency *OMNI* tracking number: 00567

1. Start the NIST traceable stopwatch: at a predetermined time (i.e. 1.00 minutes), the technician shall start the watch being tested. When 15.00 seconds have passed (i.e. the NIST traceable stopwatch reads 1 minute, 15 seconds), the technician shall stop the watch being tested. Record the target time interval (i.e. 15.00 seconds). Repeat this step twice and record the data.

2. Repeat step #1 for each of the following target time intervals: 30.00 seconds, 10.00 minutes, and 30 minutes.

3. If the delta between the target time and measured time is less than 5% of the target time interval or 2.00 seconds (whichever is less), then the technician has demonstrated proficiency with the specific instrument utilized in the proficiency test. The proficiency is valid for a period of 12 months.

4. Archive the proficiency test data and information, including the effective date and expiration date of the proficiency, in the equipment record for the instrument involved.

Target time:	15.00 seconds	#1 Measured time:	15.05	#2 Measured time:	14.96	#3 Measured time: 15.00
Target time:	30.00 seconds	#1 Measured time:	30.19	#2 Measured time:	30.18	#3 Measured time: 29.84
Target time:	45.00 seconds	#1 Measured time:	44.98	#2 Measured time:	44.79	#3 Measured time: 44.89
Target time:	60.00 seconds	#1 Measured time:	59.97	#2 Measured time:	59.94	#3 Measured time: 59.97
Target time:	10.00 minutes	#1 Measured time:	9'59"78	#2 Measured time:	9'59"90	#3 Measured time: 10'00"15
Target time:	30.00 minutes	#1 Measured time:	~~9'59"40~~ 30'00"23	#2 Measured time:	30'00"06	#3 Measured time: 29'59"97

The uncertainty of measurement is ±1 sec. This is based on the reference standard having a TAR (Test Accuracy Ratio) of at least 4:1.

This calibration procedure is confirmed by the manufacturer as a proper method for evaluating the accuracy of timers.

Technician Signature: _____ Date: 8/7/17

Reviewed by: _____ Date: 8/7/17

Certificate of Calibration

Certificate Number: **636406**

JJ Calibrations, Inc.
7007 SE Lake Rd
Portland, OR 97267-2105
Phone 503.786.3005
FAX 503.786.2994

0723.01
Calibration

Omni-Test Laboratories
13327 NE Airport Way
Portland, OR 97230

PO: **160115**
Order Date: 11/22/2016
Authorized By: N/A

Property #: OMNI-00576
User: N/A
Department: N/A
Make: General
Model: 0-6"
Serial #: OMNI-00576
Description: Caliper, 0-6"
Procedure: DCN 500777
Accuracy: ±0.001"

Calibrated on: 12/05/2016
*Recommended Due: 12/05/2017
Environment: 20 °C 43 % RH
* As Received: Out of Tolerance
* As Returned: Limited
Action Taken: Calibrated
Technician: 53

Remarks: * Many factors may cause the unit to drift out of calibration before the recommended due date. Any reported error is the absolute value between the reference and the unit. Uncertainties include the effects of the unit.

Received unit with OD jaws out of tolerance over 3.0". Limited Calibration per Bruce Davis: Do not use OD jaws past 3.0".

Standards Used

Std ID	Manufacturer	Model	Nomenclature	Due Date	Trace ID
368A	Rutland	2225-7081	81 Piece Gage Block Set	05/24/2017	620803
449A	Mitutoyo	293-766-30	Micrometer, Digital, 0-1"	07/25/2017	627018

Measurement Data

Parameter / Measurement Description	Range Unit	Reference	Min	Max	[k]Error	UUT	Uncertainty Accredited = ✓
Before/After							
Length - Outside							
	Inch	0.2500	0.249	0.251	0.000	0.250 Inch	1.1E-03 ✓
	Inch	0.5000	0.499	0.501	0.000	0.500 Inch	1.1E-03 ✓
	Inch	0.7500	0.749	0.751	0.001	0.751 Inch	1.1E-03 ✓
	Inch	1.0000	0.999	1.001	0.001	1.001 Inch	1.1E-03 ✓
	Inch	3.0000	2.999	3.001	0.001	3.001 Inch	1.1E-03 ✓
	Inch	6.0000	5.999	6.001	0.003	6.003 Inch	1.2E-03 ✓
Step	Inch	1.0000	0.999	1.001	0.000	1.000 Inch	1.1E-03 ✓
Depth Rod	Inch	1.0000	0.999	1.001	0.001	1.001 Inch	1.1E-03 ✓
Length inside ID jaws							
I.D. Jaws	Inch	0.5000	0.499	0.501	0.000	0.500 Inch	1.1E-03 ✓

JJ Calibrations, Inc. certifies that this instrument has been calibrated in accordance with the JJ Calibrations Quality Assurance Manual with the stated procedure using standards that are traceable to the National Institute of Standards and Technology (NIST), or other National Measurement Institutes (NMI's), or by using natural physical constants, intrinsic standards or ratio calibration techniques. The quality system and this certificate are in compliance with ANSI/NCSL Z540-1-1994, ISO/IEC 17025-2005, ISO 10012-1, the ISO 9000 family and QS 9000. The expanded uncertainties of measurements for this calibration are based upon 95% (2 sigma) confidence limits. Unless otherwise stated, a test accuracy ratio (TAR) of 4:1, if achievable, is maintained. The results reported herein apply only to the calibration of the item described above. This report may not be reproduced, except in full, without prior written consent of JJ Calibrations, Inc.
JJ Calibrations, Inc. quality system has been assessed and accredited to ISO/IEC 17025:2005.

Reviewer

3 Issued 12/05/2016 Rev # 15

Inspector

VWR Temperature Hygrometer Calibration Procedure and Data Sheet

Frequency: Every Two Years

Step 1: Locate NIST traceable standard.

Step 2: Place unit to be calibrated, tracking No. OMNI- 00592, inside OMNI desiccate box on the same shelf with the NIST traceable standard.

Step 3: After a period of not less than four hours record the temperature and humidity of both units in the spaces provide below.

Step 4: If the unit to be calibrated matches the NIST standard within ± 4%, it is acceptable. If not, the unit needs to be sent to a repair company or replaced.

Verification Data:

Date: 1/5/17 Technician: B Davis

Time in desiccate: 0900 Recording time: 0845 1/6/17

NIST Standard Temperature: 67.5 °F NIST Standard Humidity: 9.5

Test Unit Temperature Reading: 66.9 °F Test Unit Humidity Reading: 6.1

Test unit OMNI- 00592 is X or was not ___ within acceptable limits.

Technician Signature: [signature]

Comments: Humidity Results of 00592 are within ± 4% of Reference meter
BD

Certificate of Calibration

Certificate Number: **655889**

JJ Calibrations, Inc.
7007 SE Lake Rd
Portland, OR 97267-2105
Phone 503.786.3005
FAX 503.786.2994

Omni-Test Laboratories
13327 NE Airport Way
Portland, OR 97230

OnSite

0723.01
Calibration

PO: 170142
Order Date: 08/07/2017
Authorized By: N/A

Property #: OMNI-00637
User: N/A
Department: N/A
Make: Mettler Toledo
Model: MS104TS/00
Serial #: B729400181
Description: Scale, Analytical, 120g
Procedure: DCN 500887
Accuracy: ±0.0005g

Calibrated on: 08/07/2017
*Recommended Due: 02/07/2018
Environment: 22 °C 45 % RH
* As Received: Within Tolerance
* As Returned: Within Tolerance
Action Taken: Calibrated
Technician: 34

Remarks: * Many factors may cause the unit to drift out of calibration before the recommended due date. Any reported error is the absolute value between the reference and the unit. Uncertainties include the effects of the unit.

Standards Used

Std ID	Manufacturer	Model	Nomenclature	Due Date	Trace ID
256A	Rice Lake	W0133K	Mass Set	10/28/2017	616126

Measurement Data

Parameter / Measurement Description	Range Unit	Reference	Min	Max	*Error	UUT	Uncertainty Accredited = ✓
Before/After							
Force							
	g	10.00000	9.9995	10.0005	0.0001	10.0001 g	5.7E-04 ✓
	g	30.00000	29.9995	30.0005	0.0001	30.0001 g	5.7E-04 ✓
	g	60.00000	59.9995	60.0005	0.0003	60.0003 g	5.7E-04 ✓
	g	90.00000	89.9995	90.0005	0.0002	90.0002 g	5.7E-04 ✓
	g	120.00000	119.9995	120.0005	0.0003	120.0003 g	5.7E-04 ✓

JJ Calibrations, Inc. certifies that this instrument has been calibrated in accordance with the JJ Calibrations Quality Assurance Manual with the stated procedure using standards that are traceable to the National Institute of Standards and Technology (NIST), or other National Measurement Institutes (NMI's), or by using natural physical constants, intrinsic standards or ratio calibration techniques. The quality system and this certificate are in compliance with ANSI/NCSL Z540-1-1994, ISO/IEC 17025-2005, ISO 10012-1, the ISO 9000 family and QS 9000. The expanded uncertainties of measurements for this calibration are based upon 95% (2 sigma) confidence limits. Unless otherwise stated, a test accuracy ratio (TAR) of 4:1, if achievable, is maintained. The results reported herein apply only to the calibration of the item described above. This report may not be reproduced, except in full, without prior written consent of JJ Calibrations, Inc.
JJ Calibrations, Inc. quality system has been assessed and accredited to ISO/IEC 17025:2005.

Reviewer

3 Issued 08/14/2017 Rev # 15

Inspector

Conrell's Scale Service
An R.B. Pugh Company LLC
Celebrating Over 40 Years of Sales and Service in the Columbia Basin

Certificate of Calibration

4300 RD. K N.E.
Moses Lake,
Washington 98837
Ph: (509) 765-7754
Fax: (509) 765-4941
rpugh@nctv.com

Customer: BLAZE KING
Address: 146 A STREET
City, State Zip: WALLA WALLA, WASHINGTON 99362

Certificate ID: BK-2171506
ISO Number:
Date 6/15/2017

Indicator Mfg.	Base Mfg.	Cal Date	Scale ID	Scale Location
Weigh-Tronix	N/A	6/15/2017	BK-2	LAB
Indicator Model	**Base Model**	**Due Date**	**Scale Class**	**Scale Range**
WI125	N/A	6/15/2018	III	0 - 1000 lb x 0.1 lb
Indicator Serial	**Base Serial**	**Procedure**	**Scale Status**	
073624	N/A	-	In Service	
Test Interval				
1 Year				

EQUIPMENT CONDITIONS

[Working] Non-Working [Clean] Dirty Out of Level Out of Service

SHIFT TEST **Shift Test Result:** [Pass] Fail Adjust Not Applicable **Shift Weight:** 100.0 lb

Position

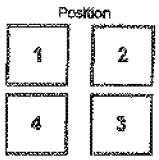

Position

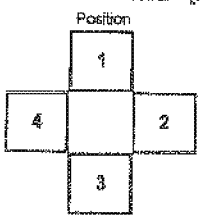

All tolerances calculated in conformance with Handbook 44 Table 6.

LOAD TEST

Preliminary Load Test		
Test Wt.	**Reading**	**Error**
50.0 lb	50.0 lb	0.0 lb
100.0 lb	100.0 lb	0.0 lb
200.0 lb	200.0 lb	0.0 lb
300.0 lb	299.9 lb	-0.1 lb
400.0 lb	399.9 lb	-0.1 lb
500.0 lb	499.9 lb	-0.1 lb

In acceptance tolerance? [Yes] No N/A

Final Load Test		
Test Wt.	**Reading**	**Error**
50.0 lb	50.0 lb	0.0 lb
100.0 lb	100.0 lb	0.0 lb
200.0 lb	200.0 lb	0.0 lb
300.0 lb	300.0 lb	0.0 lb
400.0 lb	400.0 lb	0.0 lb
500.0 lb	500.0 lb	0.0 lb

In acceptance tolerance? [Yes] No N/A

TEST INFORMATION

Test Weight Classification:	F
Traceability Certificate Number(s):	I-5743 Cal Date: 10/5/2016 Recal Date: 10/5/2018
Standards Used:	50 LB 50 lb #1, 2, 3, 4, 5, 6, 7, 8, 9, 10
Expanded Uncertainty:	Available on Request or Reported on this Document
Test Location:	[Onsite] Offsite
Overall Result:	[Pass] Fail Adjust
Was the scale within customers required accuracy?	[Y] N N/A
Environmental Conditions:	[Acceptable] Unacceptable
Comments / Notes:	TESTED AND ADJUSTED SCALE LEFT AS SHOWN
Technician:	Mike Pugh A0110
Certifying Technician:	Technician Signature not found.

Scales were calibrated with certified test weights. Adjustments made to restore and/or maintain the accuracy of the scale conform to the tolerances established by the National Institute of Standards and Technology as specified in Handbook 44 Section 2.2, or Manufacturers Specifications. Best measurement of uncertainty calculated using a coverage factor of K=2. This provides confidence level of 95%. This certificate shall not be reproduced, except in full, with the written approval of the laboratory. Measurement uncertainty available on request.

Form: No currently existing form fits this report

Columbia Scale Service
An R.B. Pugh Company LLC
Celebrating Over 40 Years of Sales and Service in the Columbia Basin

Certificate of Calibration

4300 RD. K N.E.
Moses Lake,
Washington 98837
Ph: (509) 765-7754
Fax: (509) 765-4941
rpugh@ncfv.com

Customer: BLAZE KING
Address: 146 A STREET
City, State Zip: WALLA WALLA, WASHINGTON 99362

Certificate ID: BK-1171506
ISO Number:
Date 6/15/2017

Indicator Mfg. Weigh-Tronix
Indicator Model WI125
Indicator Serial 123
Test Interval 1 Year

Base Mfg. N/A
Base Model N/A
Base Serial N/A

Cal Date 6/15/2017
Due Date 6/15/2018
Procedure -

Scale ID BK-1
Scale Class III
Scale Status Out Of Service

Scale Location LAB
Scale Range 0 - 1000 lb x 0.1 lb

EQUIPMENT CONDITIONS
[Working] Non-Working [Clean] Dirty Out of Level Out of Service

SHIFT TEST **Shift Test Result:** [Pass] Fail Adjust Not Applicable **Shift Weight:** 100.0 lb

Position

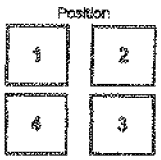

Position

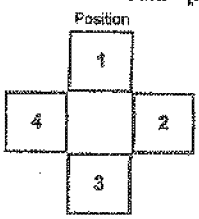

Shipping Scale

All tolerances calculated in conformance with Handbook 44 Table 6.

LOAD TEST

Preliminary Load Test		
Test Wt.	Reading	Error
50.0 lb	50.0 lb	0.0 lb
100.0 lb	100.0 lb	0.0 lb
200.0 lb	200.0 lb	0.0 lb
300.0 lb	300.0 lb	0.0 lb
400.0 lb	400.1 lb	0.1 lb
500.0 lb	500.0 lb	0.0 lb

In acceptance tolerance? [Yes] No N/A

Final Load Test		
Test Wt.	Reading	Error
50.0 lb	50.0 lb	0.0 lb
100.0 lb	100.0 lb	0.0 lb
200.0 lb	200.0 lb	0.0 lb
300.0 lb	300.0 lb	0.0 lb
400.0 lb	400.0 lb	0.0 lb
500.0 lb	500.0 lb	0.0 lb

In acceptance tolerance? [Yes] No N/A

TEST INFORMATION

Test Weight Classification:	F
Traceability Certificate Number(s):	I-5743 Cal Date: 10/5/2016 Recal Date: 10/5/2018
Standards Used:	50 LB 50 lb #1, 2, 3, 4, 5, 6, 7, 8, 9, 10
Expanded Uncertainty:	Available on Request or Reported on this Document
Test Location:	[Onsite] Offsite
Overall Result:	[Pass] Fail Adjust
Was the scale within customers required accuracy?	[Y] N N/A
Environmental Conditions:	[Acceptable] Unacceptable
Comments / Notes:	TESTED AND ADJUSTED SCALE LEFT AS SHOWN
Technician:	Mike Pugh A0110
Certifying Technician:	Technician Signature not found.

Scales were calibrated with certified test weights. Adjustments made to restore and/or maintain the accuracy of the scale conform to the tolerances established by the National Institute of Standards and Technology as specified in Handbook 44 Section 2.2, or Manufacturers Specifications. Best measurement of uncertainty calculated using a coverage factor of K=2. This provides confidence level of 95%. This certificate shall not be reproduced, except in full, with the written approval of the laboratory. Measurement uncertainty available on request.

Form: No currently existing form fits this report

PRAXAIR

Praxair
5700 South Alameda Street
Los Angeles, CA 90058
Tel: (323) 585-2154 Fax:(714) 542-6689
POVPID: F22017

DocNumber: 000104669

CERTIFICATE OF ANALYSIS / EPA PROTOCOL GAS

Customer & Order Information:

PXPKG TUALATIN OR H
10450 SW TUALATIN SHERWOOD
TUALATIN OR 97062

Praxair Order Number: 70187070
Customer P. O. Number:
Customer Reference Number:

Fill Date: 1/27/2017
Part Number: NI CD10CO33E-AS
Lot Number: 109702715
Cylinder Style & Outlet: AS CGA 590
Cylinder Pressure & Volume: 2000 psig 140 cu. ft.

Certified Concentration:

Expiration Date:		2/22/2025	NIST Traceable
Cylinder Number:		CC76915	Analytical Uncertainty:
10.04	%	CARBON DIOXIDE	± 0.4 %
2.52	%	CARBON MONOXIDE	± 0.7 %
10.52	%	OXYGEN	± 0.2 %
	Balance	NITROGEN	

Certification Information: *Certification Date:* 2/22/2017 *Term:* 96 Months *Expiration Date:* 2/22/2025

This cylinder was certified according to the 2012 EPA Traceability Protocol, Document #EPA-600/R-12/531, using Procedure G1. Do Not Use this Standard if Pressure is less than 100 PSIG.

CO2 responses have been corrected for O2 effect. O2 responses have been corrected for CO2 interference.

Analytical Data: *(R=Reference Standard, Z=Zero Gas, C=Gas Candidate)*

1. Component: CARBON DIOXIDE

Requested Concentration: 10 %
Certified Concentration: 10.04 %
Instrument Used: Horiba VIA-510 S/N 20C194WK
Analytical Method: NDIR
Last Multipoint Calibration: 2/10/2017

Reference Standard Type: GMIS
Ref. Std. Cylinder #: CC283552
Ref. Std. Conc: 13.99%
Ref. Std. Traceable to SRM #: 1675b
SRM Sample #: 6-F-51
SRM Cylinder #: CAL014538

First Analysis Data: **Date:** 2/22/2017

Z:	0	R:	13.97	C:	10.02	Conc:	10.039
R:	13.96	Z:	0	C:	10.02	Conc:	10.039
Z:	0	C:	10.02	R:	13.96	Conc:	10.039

UOM: % **Mean Test Assay:** 10.039 %

Second Analysis Data: **Date:**

Z:	0	R:	0	C:	0	Conc:	0
R:	0	Z:	0	C:	0	Conc:	0
Z:	0	C:	0	R:	0	Conc:	0

UOM: % **Mean Test Assay:** 0 %

2. Component: CARBON MONOXIDE

Requested Concentration: 2.5 %
Certified Concentration: 2.52 %
Instrument Used: Horiba VIA-510 S/N UB9UCSYX
Analytical Method: NDIR
Last Multipoint Calibration: 2/10/2017

Reference Standard Type: GMIS
Ref. Std. Cylinder #: CC103175
Ref. Std. Conc: 2.017%
Ref. Std. Traceable to SRM #: 2640a
SRM Sample #: 53-C-38
SRM Cylinder #: CAL013925

First Analysis Data: **Date:** 2/22/2017

Z:	0	R:	2.013	C:	2.508	Conc:	2.513
R:	2.013	Z:	0	C:	2.519	Conc:	2.524
Z:	0	C:	2.508	R:	2.013	Conc:	2.513

UOM: % **Mean Test Assay:** 2.517 %

Second Analysis Data: **Date:**

Z:	0	R:	0	C:	0	Conc:	0
R:	0	Z:	0	C:	0	Conc:	0
Z:	0	C:	0	R:	0	Conc:	0

UOM: % **Mean Test Assay:** 0 %

Information contained herein has been prepared at your request by qualified experts within Praxair Distribution, Inc. While we believe that the information is accurate within the limits of the analytical methods employed and is complete to the extent of the specific analyses performed, we make no warranty or representation as to the suitability of the use of the information for any purpose. The information is offered with the understanding that any use of the information is at the sole discretion and risk of the user. In no event shall the liability of Praxair Distribution, Inc., arising out of the use of the information contained herein exceed the fee established for providing such information.

PRAXAIR

Praxair
5700 South Alameda Street
Los Angeles, CA 90058
Tel: (323) 585-2154 Fax:(714) 542-6689
PGVPID: F22017

DocNumber: 000104669

CERTIFICATE OF ANALYSIS / EPA PROTOCOL GAS

3. Component: OXYGEN

Requested Concentration: 10.5 %
Certified Concentration: 10.52 %
Instrument Used: OXYMAT 5E
Analytical Method: PARAMAGNETIC
Last Multipoint Calibration: 2/8/2017

Reference Standard Type: GMIS
Ref. Std. Cylinder # : CC111177
Ref. Std. Conc: 10.01%
Ref. Std. Traceable to SRM # : 2658a
SRM Sample # : 72-D-28
SRM Cylinder # CAL018862

First Analysis Data: Date: 2/22/2017

Z:	0	R:	10.02	C:	10.53	Conc:	10.519
R:	10.02	Z:	0	C:	10.53	Conc:	10.519
Z:	0	C:	10.53	R:	10.02	Conc:	10.519

UOM: % Mean Test Assay: 10.519 %

Second Analysis Data: Date:

Z:	0	R:	0	C:	0	Conc:	0
R:	0	Z:	0	C:	0	Conc:	0
Z:	0	C:	0	R:	0	Conc:	0

UOM: % Mean Test Assay: 0 %

Analyzed by: Ying.Yu

Certified by: Nassim Haddad

Information contained herein has been prepared at your request by qualified experts within Praxair Distribution, Inc. While we believe that the information is accurate within the limits of the analytical methods employed and is complete to the extent of the specific analyses performed, we make no warranty or representation as to the suitability of the use of the information for any purpose. The information is offered with the understanding that any use of the information is at the sole discretion and risk of the user. In no event shall the liability of Praxair Distribution, Inc., arising out of the use of the information contained herein exceed the fee established for providing such information.

PRAXAIR

Praxair
5700 South Alameda Street
Los Angeles, CA 90058
Tel: (323) 585-2154 Fax:(714) 542-6689
PGVPID: F22017

DocNumber: 000104682

CERTIFICATE OF ANALYSIS / EPA PROTOCOL GAS

Customer & Order Information:

PXPKG TUALATIN OR H
10450 SW TUALATIN SHERWOOD
TUALATIN OR 97062

Praxair Order Number: 70187071
Customer P. O. Number:
Customer Reference Number:

Fill Date: 1/24/2017
Part Number: NI CD17C08E-AS
Lot Number: 109702414
Cylinder Style & Outlet: AS CGA 590
Cylinder Pressure & Volume: 2000 psig 140 cu. ft.

Certified Concentration:

Expiration Date:		2/22/2025	NIST Traceable
Cylinder Number:		CC153453	Analytical Uncertainty:
17.00	%	CARBON DIOXIDE	± 0.3 %
4.27	%	CARBON MONOXIDE	± 0.6 %
17.01	%	OXYGEN	± 0.1 %
	Balance	NITROGEN	

Certification Information: *Certification Date:* 2/22/2017 *Term:* 96 Months *Expiration Date:* 2/22/2025

This cylinder was certified according to the 2012 EPA Traceability Protocol, Document #EPA-600/R-12/531, using Procedure G1. Do Not Use this Standard if Pressure is less than 100 PSIG.

CO2 responses have been corrected for O2 effect. O2 responses have been corrected for CO2 interference.

Analytical Data: *(R=Reference Standard, Z=Zero Gas, C=Gas Candidate)*

1. Component: CARBON DIOXIDE

Requested Concentration: 17 %
Certified Concentration: 17.00 %
Instrument Used: Horiba VIA-510 S/N 20C194WK
Analytical Method: NDIR
Last Multipoint Calibration: 2/10/2017

First Analysis Data: Date: 2/22/2017

Z:	0	R:	20.01	C:	16.99	Conc:	16.998
R:	20.01	Z:	0	C:	17	Conc:	17.008
Z:	0	C:	16.99	R:	20.01	Conc:	16.998

UOM: % Mean Test Assay: 17.002 %

Reference Standard Type: GMIS
Ref. Std. Cylinder #: SA10234
Ref. Std. Conc: 20.02%
Ref. Std. Traceable to SRM #: RGM#CC28
SRM Sample #: N/A
SRM Cylinder #: RGM#CC28033

Second Analysis Data: Date:

Z:	0	R:	0	C:	0	Conc:	0
R:	0	Z:	0	C:	0	Conc:	0
Z:	0	C:	0	R:	0	Conc:	0

UOM: % Mean Test Assay: 0 %

2. Component: CARBON MONOXIDE

Requested Concentration: 4.25 %
Certified Concentration: 4.27 %
Instrument Used: Horiba VIA-510 S/N U69UCSYX
Analytical Method: NDIR
Last Multipoint Calibration: 2/10/2017

First Analysis Data: Date: 2/22/2017

Z:	0	R:	4	C:	4.31	Conc:	4.263
R:	4	Z:	0	C:	4.32	Conc:	4.273
Z:	0	C:	4.31	R:	4.01	Conc:	4.263

UOM: % Mean Test Assay: 4.267 %

Reference Standard Type: GMIS
Ref. Std. Cylinder #: CC257812
Ref. Std. Conc: 3.96%
Ref. Std. Traceable to SRM #: 2641a
SRM Sample #: 59-C-02
SRM Cylinder #: FF13890

Second Analysis Data: Date:

Z:	0	R:	0	C:	0	Conc:	0
R:	0	Z:	0	C:	0	Conc:	0
Z:	0	C:	0	R:	0	Conc:	0

UOM: % Mean Test Assay: 0 %

Information contained herein has been prepared at your request by qualified experts within Praxair Distribution, Inc. While we believe that the information is accurate within the limits of the analytical methods employed and is complete to the extent of the specific analyses performed, we make no warranty or representation as to the suitability of the use of the information for any purpose. The information is offered with the understanding that any use of the information is at the sole discretion and risk of the user. In no event shall the liability of Praxair Distribution, Inc., arising out of the use of the information contained herein exceed the fee established for providing such information.

Praxair
5700 South Alameda Street
Los Angeles, CA 90058
Tel: (323) 585-2154 Fax:(714) 542-6689
PGVPID: F22017

DocNumber: 000104682

CERTIFICATE OF ANALYSIS / EPA PROTOCOL GAS

3. Component: OXYGEN

Requested Concentration: 17 %
Certified Concentration: 17.01 %
Instrument Used: OXYMAT 5E
Analytical Method: PARAMAGNETIC
Last Multipoint Calibration: 2/5/2017

Reference Standard Type: GMIS
Ref. Std. Cylinder #: CC112100
Ref. Std. Conc.: 19.74 %
Ref. Std. Traceable to SRM #: 2659a
SRM Sample #: 71-E-19
SRM Cylinder #: FF22331

First Analysis Data: Date: 3/22/2017

Z:	0	R:	19.74	C:	17.01	Conc:	17.016
R:	19.72	Z:	0	C:	16.99	Conc:	16.996
Z:	0	C:	17.01	R:	19.74	Conc:	17.016

UOM: % Mean Test Assay: 17.009 %

Second Analysis Data: Date:

Z:	0	R:	0	C:	0	Conc:	0
R:	0	Z:	0	C:	0	Conc:	0
Z:	0	C:	0	R:	0	Conc:	0

UOM: % Mean Test Assay: 0 %

Analyzed by: Ying Yu

Certified by: Nassim Haddad

Information contained herein has been prepared at your request by qualified experts within Praxair Distribution, Inc. While we believe that the information is accurate within the limits of the analytical methods employed and is complete to the extent of the specific analyses performed, we make no warranty or representation as to the suitability of the use of the information for any purpose. The information is offered with the understanding that any use of the information is at the sole discretion and risk of the user. In no event shall the liability of Praxair Distribution, Inc., arising out of the use of the information con tained herein exceed the fee established for providing such information.

EXAMPLE CALCULATIONS

Equations and Sample Calculations – ASTM E2780 & E2515

Manufacturer: Valley Comfort
Model: 20.2 Series
Run: 2
Category:

Equations used to calculate the parameters listed below are described in this appendix. Sample calculations are provided for each equation. The raw data and printout results from a sample run are also provided for comparison to the sample calculations.

M_{Sdb} – Weight of test fuel spacers, dry basis, kg

M_{Cdb}– Weight of test fuel crib, excluding nails and spacers, dry basis, kg

D_{Cdb} - Density of fuel crib, excluding spacers and nails, dry basis, lbs/ft^3

M_{FTAdb} - Total weight of fuel crib excluding nails, dry basis, kg

BR – Dry burn rate, kg/hr

V_s – Average gas velocity in the dilution tunnel, ft/sec

Q_{sd} – Average gas flow rate in dilution tunnel, dscf/hr

$V_{m(std)}$ – Volume of gas sampled, corrected to dry standard conditions, dscf

m_n – Total particulate matter collected, mg

C_s - Concentration of particulate matter in tunnel gas, dry basis, corrected to standard conditions, g/dscf

E_T – Total particulate emissions, g

PR - Proportional rate variation

PM_R – Particulate emissions for test run, g/hr

PM_F – Particulate emission factor for test run, g/dry kg of fuel burned

M_{Sdb} – Weight of test fuel spacers, dry basis, kg
ASTM E2780 equation (1)

$$M_{Sdb} = (M_{Swb})(100/(100 + FM_S))$$

Where,

FM_S = average fuel moisture of test fuel spacers, % dry basis

M_{Swb} = weight of test fuel spacers, wet basis, kg

Sample Calculation:

FM_S = 17.8 %

M_{Swb} = 1.0 lbs

0.4536 = Conversion factor from lbs to kg

M_{Sdb} = [(1.0 x 0.4536) (100/(100 + 17.8)

M_{Sdb} = **0.38** kg

M_{Cdb}– Weight of test fuel crib, excluding nails and spacers, dry basis, kg
ASTM E2780 equation (2)

$$M_{Cdb} = \Sigma[(M_{CPnwb})(100/(100 + FM_{CPn}))]$$

Where,

M_{CPnwb} = weight of each test fuel piece n in fuel crib, excluding nails and spacers, wet basis, kg

FM_{CPn} = Average fuel moisture of test fuel n in fuel crib, % dry basis

Sample Calculation (test fuel piece 1):

MC_{Pnwb} = 1.3

FM_{CPn} = 23.8

= 1.3 (100/(100+ 23.8)

= 1.1 lbs

Total crib weight, excluding spacer 9.06 lbs

M_{Cdb} = **4.11** kg

D_{Cdb} - Density of fuel crib, excluding spacers and nails, dry basis, lbs/ft^3
ASTM E2780 equation (3)

$$D_{Cdb} = M_{Cdb}/V_C$$

Where,

V_C = Volume of fuel crib, ft^3

Sample calculation:

V_C = 523 in^3

1728 = conversion from in^3 to ft^3

D_{Cdb} = 9.06 / 523 * 1728

= **29.9** lbs/ft^3

M_{FTAdb} - Total weight of fuel crib excluding nails, dry basis, kg
ASTM E2780 equation (4)

$$M_{FTAdb} = M_{Sdb} + M_{Cdb}$$

Sample calculation:

$$M_{FTAdb} = 0.38 + 4.11$$

$$= \mathbf{4.49} \text{ kg}$$

BR – dry burn rate, kg/hr
ASTM E2780 equation (5)

$$BR = \frac{60\ M_{FTAdb}}{\theta}$$

Where,

θ = Total length of test run, min

Sample Calculation:

M_{Bdb} = 4.49 kg

θ = 175 min

$$BR = \frac{60 \times 4.49}{175}$$

BR = **1.54** kg/hr

V_s – Average gas velocity in the dilution tunnel, ft/sec
ASTM E2515 equations (9)

$$v_s = F_P \times k_p \times C_p \times (\sqrt{\Delta P})_{avg} \times \sqrt{\frac{T_{s(avg)}}{P_s \times M_s}}$$

Where:

F_p	=	Adjustment factor for center of tunnel pitot tube placement, $Fp = \frac{V_{strav}}{V_{scent}}$, ASTM E2515 Equation (1)
v_{scent}	=	Dilution tunnel velocity calculated after the multi-point pitot traverse at the center, ft/sec
v_{strav}	=	Dilution tunnel velocity calculated after the multi-point pitot traverse, ft/sec
k_p	=	Pitot tube constant, 85.49
C_p	=	Pitot tube coefficient: 0.99, unitless
ΔP*	=	Velocity pressure in the dilution tunnel, in H_2O
T_s	=	Absolute average gas temperature in the dilution tunnel, °R; (°R = °F + 460)
P_s	=	Absolute average gas static pressure in dilution tunnel, = $P_{bar} + P_g$, in Hg
P_{bar}	=	Barometric pressure at test site, in. Hg
P_g	=	Static pressure of tunnel, in. H_20; (in Hg = in H_20/13.6)
M_s	=	**The dilution tunnel wet molecular weight; M_s = 28.78 assuming a dry weight of 29 lb/lb-mole

Sample calculation:

$$Fp = \frac{13.45}{15.25} = 0.882$$

$$V_s = 0.882 \times 85.49 \times 0.99 \times 0.219 \times \left(\frac{98.8 + 460}{\left(28.71 + \frac{-0.17}{13.6}\right) \times 28.78} \right)^{1/2}$$

V_s = **13.45** ft/s

*The ASTM test standard mistakenly has the square root of the average delta p instead of the average of the square root of delta p. The current EPA Method 2 is also incorrect. This was verified by Mike Toney at EPA.

**The ASTM test standard mistakenly identifies Ms as the dry molecular weight. It should be the wet molecular weight as indicated in EPA Method 2.

Q_{sd} – Average gas flow rate in dilution tunnel, dscf/hr
ASTM E2515 equation (3)

$$Q_{sd} = 3600 \times (1 - B_{ws}) \times v_s \times A \times \frac{T_{std}}{T_{s(avg)}} \times \frac{P_s}{P_{std}}$$

Where:

3600	=	Conversion from seconds to hours (ASTM method uses 60 to convert in minutes)
B_{ws}	=	Water vapor in gas stream, proportion by volume; assume 2%
A	=	Cross sectional area of dilution tunnel, ft^2
T_{std}	=	Standard absolute temperature, 528 °R
P_s	=	Absolute average gas static pressure in dilution tunnel, = $P_{bar} + P_g$, in Hg
$T_{s(avg)}$	=	Absolute average gas temperature in the dilution tunnel, °R; (°R = °F + 460)
P_{std}	=	Standard absolute pressure, 29.92 in Hg

Sample calculation:

$$Q_{sd} = 3600 \times (1 - 0.02) \times 13.45 \times 0.196 \times \frac{528}{98.8 + 460} \times \frac{28.7 + \frac{-0.17}{13.6}}{29.92}$$

Q_{sd} = **8443.3** dscf/hr

$V_{m(std)}$ – Volume of Gas Sampled Corrected to Dry Standard Conditions, dscf
ASTM E2515 equation (6)

$$V_{m(std)} = K_1 \, V_m \, Y \frac{P_{bar} + \left(\frac{\Delta H}{13.6}\right)}{T_m}$$

Where:

K_1	=	17.64 °R/in. Hg
V_m	=	Volume of gas sample measured at the dry gas meter, dcf
Y	=	Dry gas meter calibration factor, dimensionless
P_{bar}	=	Barometric pressure at the testing site, in. Hg
ΔH	=	Average pressure differential across the orifice meter, in. H_2O
T_m	=	Absolute average dry gas meter temperature, °R

Sample Calculation:

Using equation for Train 1:

$$V_{m(std)} = 17.64 \times 25.248 \times 1.003 \times \frac{\left(28.71 + \frac{1.70}{13.6}\right)}{(75.5 + 460)}$$

$V_{m(std)}$ = **24.056** dscf

Using equation for Train 2:

$$V_{m(std)} = 17.64 \times 25.494 \times 0.997 \times \frac{\left(28.71 + \frac{1.35}{13.6}\right)}{(73.4 + 460)}$$

$V_{m(std)}$ = **24.217** dscf

Using equation for ambient train:

$$V_{m(std)} = 17.64 \times 0.00 \times 0 \times \frac{\left(\underline{28.71} + \frac{0.00}{13.6}\right)}{(80.1 + 460)}$$

$V_{m(std)}$ = **0** dscf

m_n – Total Particulate Matter Collected, mg
ASTM E2515 Equation (12)

$$m_n = m_p + m_f + m_g$$

Where:

m_p = mass of particulate matter from probe, mg

m_f = mass of particulate matter from filters, mg

m_g = mass of particulate matter from filter seals, mg

Sample Calculation:

Using equation for Train 1 (first hour):

m_n = 0.0 + 1.5 + 0.0

m_n = 1.5 mg

Using equation for Train 1 (post-first hour):

m_n = 0.0 + 0.7 + 0.3

m_n = 1.0 mg

Train 1 aggregate:

m_n = 1.5 + 1.0

m_n = **2.5** mg

Using equation for Train 2:

m_n = 0.2 + 1.9 + 0.9

m_n = **3** mg

C_s - Concentration of particulate matter in tunnel gas, dry basis, corrected to standard conditions, g/dsc
ASTM E2515 equation (13)

$$C_s = K_2 \times \frac{m_n}{V_{m(std)}}$$

Where:

K_2	=	Constant, 0.001 g/mg
m_n	=	Total mass of particulate matter collected in the sampling train, mg
$V_{m(std)}$	=	Volume of gas sampled corrected to dry standard conditions, dscf

Sample calculation:

For Train 1:

$$C_s = 0.001 \times \frac{2.5}{24.06}$$

C_s = **0.00010** g/dscf

For Train 2

$$C_s = 0.001 \times \frac{3.0}{24.22}$$

C_s = **0.00012** g/dscf

For Ambient Train

$$C_r = 0.001 \times \frac{0.0}{0}$$

C_r = **0** g/dscf

E_T – Total Particulate Emissions, g
ASTM E2515 equation (15)

$$E_T = (c_s - c_r) \times Q_{std} \times \theta$$

Where:

C_s	=	Concentration of particulate matter in tunnel gas, g/dscf
C_r	=	Concentration particulate matter room air, g/dscf
Q_{std}	=	Average dilution tunnel gas flow rate, dscf/hr
θ	=	Total time of test run, minutes

Sample calculation:

For Train 1

E_T = (0.000104 - 0) x 8443.3 x 175 /60

E_T = 2.56 g

For Train 2

E_T = (0.000124 - 0) x 8443.3 x 175 /60

E_T = 3.05 g

Average

E = 2.81 g

Total emission values shall not differ by more than 7.5% from the total average emissions

7.5% of the average =	0.21
Train 1 difference =	0.25
Train 2 difference =	0.25

PR - Proportional Rate Variation

ASTM E2515 equation (16)

$$PR = \left[\frac{\theta \times V_{mi} \times V_s \times T_m \times T_{si}}{\theta_i \times V_m \times V_{si} \times T_{mi} \times T_s} \right] \times 100$$

Where:

θ = Total sampling time, min

θ_i = Length of recording interval, min

V_{mi} = Volume of gas sample measured by the dry gas meter during the "ith" time interval, dcf

V_m = Volume of gas sample as measured by dry gas meter, dcf

V_{si} = Average gas velocity in the dilution tunnel during the "ith" time interval, ft/sec

V_s = Average gas velocity in the dilution tunnel, ft/sec

T_{mi} = Absolute average dry gas meter temperature during the "ith" time interval, ^{o}R

T_m = Absolute average dry gas meter temperature, ^{o}R

T_{si} = Absolute average gas temperature in the dilution tunnel during the "ith" time interval, ^{o}R

T_s = Absolute average gas temperature in the dilution tunnel, ^{o}R

Sample calculation (for the first 1 minute interval of Train 1):

$$PR = \left(\frac{175 \times 0.118 \times 13.45 \times (117.0 + 460) \times (75.5 + 460)}{1 \times 25.25 \times 13.67 \times (98.8 + 460) \times (75.0 + 460)} \right) \times 100$$

PR = <u>83</u> %

PM_R – Particulate emissions for test run, g/hr
ASTM E2780 equation (6)

$$PM_R = 60\ (E_T/\theta)$$

Where,

E_T = Total particulate emissions, grams

θ = Total length of full integrated test run, min

Sample Calculation:

E_T (Dual train average) = 2.81 g

θ = 175 min

$$PM_R = 60 \times (\ 2.81\ /\ 175\ )$$

PM_R = **0.96** g/hr

PM_F – Particulate emission factor for test run, g/dry kg of fuel burned
ASTM E2780 equation (7)

$$PM_F = E_T/M_{FTAdb}$$

Sample Calculation:

E_T (Dual train average) = 2.81 g

M_{Bdb} = 4.49 kg

PM_F = 2.81 / 4.49

PM_F = **0.62** g/kg

Appendix A

Labeling & Owner's Manual

Tested & Listed By O-T-L Portland Oregon USA C US

OMNI-Test Laboratories, Inc.

Report #0142WS013E

SIROCCO SC20.2

SN - 23.

BLAZE KING CATALYST STOVE - POÊLE À BOIS CATALYTIQUE

ROOM HEATER, SOLID FUEL TYPE, ALSO FOR USE IN MOBILE HOMES. / APPAREIL APPROUVÉ DE TYPE CARBURANT SOLIDE, AUSSI ADAPTÉ POUR INSTALLER DANS UNE MAISON MOBILE.
SUITABLE FOR MOBILE-HOME INSTALLATION. / CONCU POUR MAISONS MOBILES.
MODEL / MODÈLE: SC20.2
Tested to / Testé: UL 1482-11(R2015) / ULC S627-00
CERTIFIED IN BOTH UNITED STATES AND CANADA / CERTIFIÉ POUR LES ÉTATS-UNIS ET LE CANADA

PREVENT HOUSE FIRES- Install and use only in accordance with Blaze King's installation and operation instructions. Contact local building or fire officials about restrictions and installation inspection in your area. The flue size is 6".
CHIMNEYS: DO NOT CONNECT THIS UNIT TO A CHIMNEY FLUE SERVING ANOTHER APPLIANCE. Except for installation detailed below, use 6" listed factory built chimney suitable for use with solid fuels and conforming to, ULC629 in Canada or UL-103HT in the USA or a masonry residential type chimney.
Mobile Home, residential close clearance, and residential alcove installations require a 6" listed double wall close clearance chimney connector, with matching listed factory built chimney suitable for use with solid fuels and conforming to, ULC629 in Canada or UL-103HT in the USA. Mobile Home installations are only allowed with a roof exit.
Do not install in a sleeping room. Passing through a wall or ceiling requires special methods: see instructions and local building codes.

POUR PRÉVENIR UN INCENDIE - Installer et employer seulement selon le manuel d'installation de Blaze King. Contacter les autorités locales en bâtiments ou en matière de prévention d'incendies au sujet des normes d'inspection et d'installation dans votre secteur. La dimension des conduits de cheminée est de 6".
CHEMINÉE: NE PAS CONNECTER CETTE UNITÉ A UNE CONDUITE DE CHEMINÉE SERVANT UN AUTRE APPAREIL. Excepté pour les situations détaillées ci-dessous, employer une cheminée de 6" homologuée par le fabricant à des fins d'utilisation pour combustibles solides conformément à la norme ULC629 au Canada ou UL-103HT aux Etats-Unis ou employer une cheminée en maçonnerie de type résidentiel.
L'installation dans une maison mobile, en espace restreint ou dans des endroits à faible dégagement, requiert l'utilisation de connecteurs muraux à doubles parois et ayant une épaisseur 6" pour la cheminée. Ceux-ci doivent être homologués par le fabricant à des fins d'utilisation pour combustibles solides conformément à la norme ULC629 au Canada ou UL-103HT aux Etats-Unis. L'installation dans une maison mobile est permise seulement avec une sortie passant par le toit.
Ne pas installer dans une chambre à coucher. Passer à travers un mur ou un plafond requiert une méthode spécifique décrite dans les instructions et dans le code local du bâtiment.

MINIMUM CLEARANCES TO COMBUSTIBLES (See owners manual for complete description of all requirements)
DÉGAGEMENTS MINIMUM AUX COMBUSTIBLES (voir les directives d'installation pour la description complète de toutes les conditions)

Residential Installations / Installations Résidentielles	A	B	C	D	E	F	J
Roof exit, parallel and corner. Sortie de toit, parallèle et coin.	12.75" 324 mm	6.5" 166 mm	25.25" 642 mm	15.875"* 404 mm	6" 153 mm	18.5"* 470 mm	37" 940 mm
Wall exit, parallel and corner. Sortie de mur, parallèle et coin.	12.75" 324 mm	6.5" 166 mm	25.25" 642 mm	15.875"* 404 mm	6" 153 mm	18.5"* 470 mm	37"* 940 mm
Alcove roof exit. Fan kit or rear shield required. Sortie de toit en alcôve. Kit de ventilateur et protection arrière requise.	12.75" 324 mm	6.5" 166 mm	25.25" 642 mm	15.875"* 404 mm			37" 940 mm
Mobile Home Installations / Installation pour Maison Mobile							
Roof exit, parallel and corner. Fan kit or rear shield required. Outside air kit required. Sortie de toit, parallèle et en coin. Kit de ventilateur et protection arrière requise. Kit d'air extérieur requis.	12.75" 324 mm	6.5" 166 mm	25.25" 642 mm	15.875"* 404 mm	6" 153 mm	18.5"* 470 mm	37" 940 mm

*Check with local codes and pipe manufacturers for pipe clearances. In Canada 18" clearances from single wall pipe is required.
* Vérifier avec le code du bâtiment local et avec le manufacturier de tuyaux pour les dégagements. Au Canada un dégagement de 18 po est exigé pour un tuyau à simple paroi.

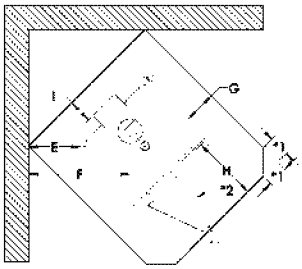

*1= 5" in Canada and 2 1/8" in USA
*2 = 59" in Canada and 57" in USA

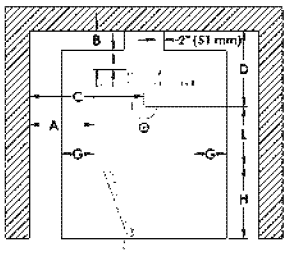

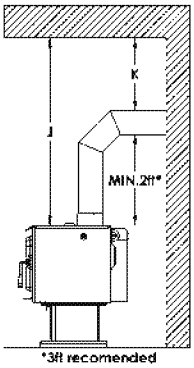

*3ft recomended

G - 3.5" (89 mm) in U.S.A.
8" (203 mm) in Canada

H - 16" (406 mm) in U.S.A.
18" (456 mm) in Canada

I - 0" (0 mm) in U.S.A.
8" (203 mm) in Canada

K - 18" (456 mm) *

ALCOVE	
min. width / largeur	50.5"
max. depth / profondeur	48"
min. height above stove top / hauteur min. au-dessus du poêle	37"

Floor protection may be any non-combustible material or Listed Floor Protector, and must extend at least 18" (456 mm) in Canada or 16" (406 mm) in U.S.A., in front of the loading door opening: In USA, minimum size is 32" x 40 1/8" (813 mm x 1020 mm), In Canada, minimum size is 41" x 50 1/8" (1042 mm x 1274 mm).
US ENVIRONMENTAL PROTECTION AGENCY Certified to comply with 2020 particulate emission standards using crib wood. (EPA test methods 28R/5G with an emission rate of .73 g/hr). This wood heater needs periodic inspection and repair for proper operation. Consult the owner's manual for further information. It is against federal regulations to operate this wood heater in a manner inconsistent with operating instructions in the owner's manual, or if the catalytic element is deactivated or removed.
*ONLY OPERATE WITH DOORS CLOSED. Open door to feed fire ONLY. *DO NOT OBSTRUCT COMBUSTION AIR OPENINGS. Do not obstruct the space beneath the heater. For use with solid wood fuel only - do not burn other fuels, this may make the catalyst in the combustor inactive. The performance of the catalytic device or its durability has not been evaluated as part of the certification. Combustor part number: Z0336A-M or Z0334. Provide adequate outside air for combustion. *Replace with only ceramic glass, 5 mm. Thickness. Unit must be installed with Blaze King Leg Kit Z2613BK or Blaze King Pedestal Kit Z3603BK, attach as shown in the installation instructions.

La protection de plancher peut être de n'importe quel matériel non combustible ou Protecteur de plancher homologué, et doit se prolonger au moins de 18" (456 mm) au Canada ou 16" (406 mm) aux États-Unis devant la porte de chargement; Aux États-Unis, la taille minimum est de 32" x 40 1/8" (813 mm x 1020 mm), au Canada la taille minimum est 41" x 50 1/8" (1042 mm x 1274 mm).
L'AGENCE DE PROTECTION ENVIRONNEMENTALE DES U.S. - Certifié conformément aux normes d'émission de particules 2020 , en utilisant du bois machiné (méthodes d'essai EPA 28R / 5G, ASTM E2515 et ASTM E2780, avec un taux d'émission de 0.73 g /hre). Cet appareil de chauffage au bois nécessite des inspections périodiques et des réparations pour un fonctionnement adéquat. Consulter le manuel du propriétaire pour plus d'informations. Il est contre les règlements fédéraux de faire fonctionner cet appareil de chauffage à l'encontre des instructions d'utilisation fournies dans le manuel du propriétaire, ou si l'élément catalytique est enlevé ou désactivé.
*Utiliser le uniquement avec les portes fermées. Ouvrir la porte pour alimenter le feu SEULEMENT. *Ne pas obstruer l'entrée d'air de combustion. Fournir l'apport d'air extérieur adéquat pour alimenter la combustion. Ne pas obstruer l'espace sous l'appareil. Utiliser uniquement avec des combustibles solides - ne pas brûler aucun autre combustible, ce qui peut rendre le catalyseur de la chambre à combustion inactif. La performance du catalyseur ou sa longévité n'a pas été évaluée dans le cadre de la certification. Numéro du catalyseur: Z0336A-M ou Z0334. *Employer seulement le verre en céramique d'une épaisseur de 5mm si le remplacement est nécessaire. L'appareil doit être installé avec le Blaze King kit de jambe Z2613BK ou Blaze King piédestal Kit Z3603BK, attache comme indiqué dans les instructions d'installation.

MANUFACTURED IN

☐ USA:
Blaze King Industries
146A Street
Walla Walla, WA.
99362

☐ CANADA:
Valley Comfort Systems
1290 Commercial Way
Penticton, B.C.
V2A 3H5

MANUFACTURE DATE

JAN ☐	FEB ☐	MAR ☐	APR ☐	MAY ☐	JUN ☐
JUL ☐	AUG ☐	SEP ☐	OCT ☐	NOV ☐	DEC ☐
2018 ☐	2019 ☐	2020 ☐	2021 ☐	2022 ☐	2023 ☐

170.0236 [10 17]

Blaze King

ASHFORD AF20.2

SOLID FUEL WOOD CATALYTIC STOVE

NATIONAL FIREPLACE INSTITUTE NFI CERTIFIED www.nficertified.org

We recommend that our woodburning hearth products be installed and serviced by professionals who are certified in the U.S. by the National Fireplace Institute® (NFI) as NFI Woodburning Specialists or who are certified in Canada by Wood Energy Technical Training (WETT).

Wood Energy Technical Training

U.S. Environmental Protection Agency certified to comply with 2020 particulate emission standards using crib wood.

Tested & Listed by O-T L C US Portland Oregon USA

Report #0142WS013E

Installer: Please complete the details on the back cover and leave this manual with the homeowner.
Homeowner: Please SAVE THESE INSTRUCTIONS for future reference.

The authority having jurisdiction (such a municipal building department, fire department, etc.) should be consulted before installation to determine the need to obtain a permit.

OPERATION & INSTALLATION MANUAL

Manufactured By

Valley Comfort Systems Inc., 1290 Commercial Way, Penticton, BC, V2A 3H5, Canada

Phone: 250-493-7444 ◆ Fax: 250-493-5833 ◆ www.blazeking.com ◆ info@blazeking.com

Pour la version française de nos manuels S.V.P. vous référez à notre site web: www.blazeking.com

180.AF20.2 v1.00

October 20, 2017

Blaze King

CHINOOK CK20.2

SOLID FUEL WOOD CATALYTIC STOVE

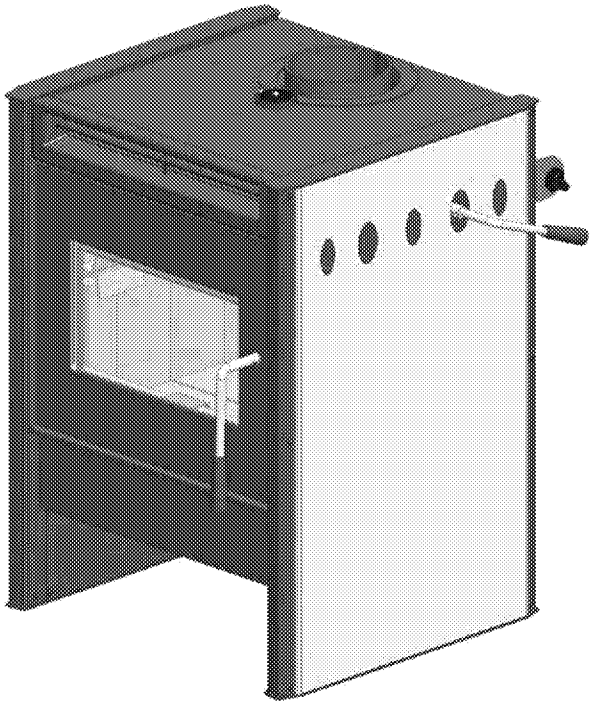

NATIONAL FIREPLACE INSTITUTE NFI CERTIFIED www.nfiinstitute.org

We recommend that our woodburning hearth products be installed and serviced by professionals who are certified in the U.S. by the National Fireplace Institute® (NFI) as NFI Woodburning Specialists or who are certified in Canada by Wood Energy Technical Training (WETT).

Wood Energy Technical Training

U.S. Environmental Protection Agency certified to comply with 2020 particulate emission standards using crib wood.

Tested & Listed by O-T-L Portland Oregon USA C US OMNI-Test Laboratories, Inc.

Report #0142WS013E

Installer: Please complete the details on the back cover and leave this manual with the homeowner.
Homeowner: Please SAVE THESE INSTRUCTIONS for future reference.

The authority having jurisdiction (such a municipal building department, fire department, etc.) should be consulted before installation to determine the need to obtain a permit.

OPERATION & INSTALLATION MANUAL

Manufactured By

Valley Comfort Systems Inc., 1290 Commercial Way, Penticton, BC, V2A 3H5, Canada
Phone: 250-493-7444 ◆ Fax: 250-493-5833 ◆ www.blazeking.com ◆ info@blazeking.com

Pour la version française de nos manuels S.V.P. vous référez à notre site web: www.blazeking.com

180.CK20.2 v1.00 October 20, 2017

Blaze King

SIROCCO SC20.2

SOLID FUEL WOOD CATALYTIC STOVE

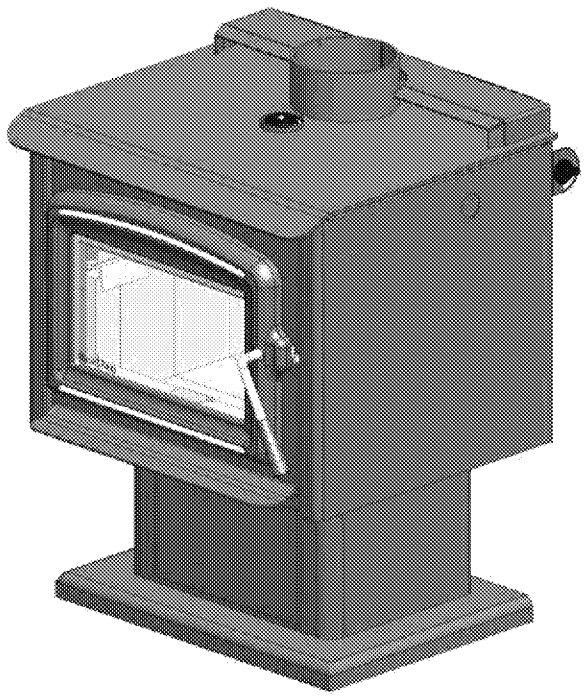

NATIONAL FIREPLACE INSTITUTE NFI CERTIFIED www.nficertified.org — We recommend that our woodburning hearth products be installed and serviced by professionals who are certified in the U.S. by the National Fireplace Institute® (NFI) as NFI Woodburning Specialists or who are certified in Canada by Wood Energy Technical Training (WETT).

U.S. Environmental Protection Agency certified to comply with 2020 particulate emission standards using crib wood.

Report #0142WS013E

Installer: Please complete the details on the back cover and leave this manual with the homeowner.
Homeowner: Please SAVE THESE INSTRUCTIONS for future reference.

The authority having jurisdiction (such a municipal building department, fire department, etc.) should be consulted before installation to determine the need to obtain a permit.

OPERATION & INSTALLATION MANUAL

Manufactured By

Valley Comfort Systems Inc., 1290 Commercial Way, Penticton, BC, V2A 3H5, Canada
Phone: 250-493-7444 ◆ Fax: 250-493-5833 ◆ www.blazeking.com ◆ info@blazeking.com

Pour la version française de nos manuels S.V.P. vous référez à notre site web: www.blazeking.com

180.SC20.2 v1.00 October 19, 2017

TABLE OF CONTENTS

INTRODUCTION 4
SPECIFICATIONS 5
EMISSIONS 5
APPLIANCE DIMENSIONS 6
APPLIANCE DIMENSIONS—Sirocco SC20.2 (w/ Pedestal) 6
APPLIANCE DIMENSIONS—Sirocco SC20.2 (w/ Legs) 7
CERTIFICATION LABEL 8
SAFETY PRECAUTIONS 9
INSTALLATION INSTRUCTIONS 12
PARTS INCLUDED WITH THE SIROCCO 12
OPTIONAL EQUIPMENT 12
FLOOR PROTECTION 12
MINIMUM CLEARANCES for SC20.2 13
COMBUSTION AIR 14
DRAFTING PERFORMANCE 14
ROLE OF THE CHIMNEY 14
VENTING SYSTEMS 15
RECOMMENDED FLUE HEIGHTS 18
MOBILE HOME (AND RESIDENTIAL ALCOVE INSTALLATIONS) 19
OPTIONAL ACCESSORIES 20
PEDESTAL (Z3803BK) 21
LEG KIT (Z2613BK) 22
DOOR INSTALLATION AND CHANGE-OUT (Z2680BK or Z2680SA) 23
OPERATING INSTRUCTIONS 24
INTRODUCTION 24
YOUR FIRST FIRE! 24
BYPASS 24
CATALYTIC THERMOMETER 24
THERMOSTAT 25
SELECTING WOOD 25
HOW TO USE MOISTURE METERS 26
EFFICIENCY 26
LIGHTING THE FIRE 27
RELOADING PROCEDURE (with the catalyst temperature in the active zone) 28
RELOADING PROCEDURE (with the catalyst temperature still in the inactive zone) 28
OPTIMAL THERMOSTAT SETTING 29
FAN OPERATION 29
ICE - FORMATION AND PREVENTION 29
WOOD BURNING IN THE SHOULDER SEASON 30
CATALYST MONITORING 31
CATALYTIC COMBUSTOR, TESTING 31
CATALYTIC COMBUSTOR, CLEANING 31
CATALYTIC COMBUSTOR, TROUBLESHOOTING 32
CATALYTIC COMBUSTOR, REPLACEMENT 34

ED_005996_00000492-00197

TABLE OF CONTENTS

MAINTENANCE 37
RUN-AWAY OR CHIMNEY FIRE 37
CREOSOTE FORMATION AND REMOVAL 37
ASH REMOVAL 38
CHIMNEY MAINTENANCE 38
FIRE EXTINGUISHERS AND SMOKE DETECTORS 38
LOADING DOOR GASKET INSPECTION 39
LOADING DOOR GASKET REPLACEMENT 39
BYPASS DOOR GASKET INSPECTION 40
BYPASS DOOR GASKET REPLACEMENT 40
DOOR GLASS GASKET INSPECTION 41
DOOR GLASS GASKET REPLACEMENT 41
DOOR GLASS, CLEANING 41
LOADING DOOR TENSION ADJUSTMENT 42
OPTIONAL FAN ASSEMBLY 43
THERMOMETER 43
THERMOSTAT 43
TROUBLESHOOTING 44
REPLACEMENT PARTS 47
WARRANTY 51
INSTALLER NOTES 56

⚠WARNING

- **THIS APPLIANCE IS HOT WHEN OPERATED AND CAN CAUSE SEVERE BURNS IF CONTACTED.**
- **ANY CHANGES OR ALTERATIONS TO THIS APPLIANCE OR ITS CONTROLS CAN BE DANGEROUS AND IS PROHIBITED BY FEDERAL AND STATE LAWS.**
- Do not operate appliance before reading and understanding operating instructions. Failure to operate appliance according to operating instructions could cause fire or injury.
- Before installing this appliance, contact the local building or fire authority and follow their guidelines.
- This appliance must be installed by a qualified installer.
- Risk of burns. The appliance should be turned off and cooled before servicing.
- Do not operate without fully assembling all components.
- Do not let the appliance become hot enough for any part to glow red.
- Do not install damaged, incomplete or substitute components.
- Risk of cuts and abrasions. Wear protective gloves and safety glasses during installation. Sheet metal edges may be sharp.
- Children and adults should be alerted to the hazards of high surface temperature and should stay away to avoid burns or clothing ignition.
- Young children should be carefully supervised when they are in the same room as the appliance. Toddlers, young children and others may be susceptible to accidental contact burns. A physical barrier is recommended if there are at risk individuals in the house. To restrict access to an appliance or appliance, install an adjustable safety gate to keep toddlers, young children and other at risk individuals out of the room and away from hot surfaces.
- Clothing or other flammable material should not be placed on or near the appliance. Objects placed in front of the appliance must be kept a minimum of 48" away from the front face of the appliance.
- Due to high temperatures, the appliance should be located out of traffic and away from furniture and draperies.
- Ensure you have incorporated adequate safety measure to protect infants / toddlers from touching hot surfaces.
- Even after the appliance is out, all surfaces, including the glass and/or any attachment will remain hot for an extended period of time.
- Check with your local hearth specialty dealer for safety hearth guards to protect children from hot surfaces. These guards must be fastened to a wall and/or to the floor.
- Any safety guard removed for servicing must be replaced prior to operating the appliance.
- Under no circumstances should this appliance be modified.
- This appliance must not be connected to a chimney flue pipe servicing a separate solid fuel burning appliance.
- Do not operate the appliance with the glass door removed, cracked or broken. Replacement of the glass should be done by a licensed or qualified service person.
- Do not strike or slam shut the appliance glass door.
- Operate only with the doors tightly closed.
- Appliance will over-fire if door is not shut and latched.
- Only certified doors / optional fronts / and surrounds for inserts with the unit are to be installed on the appliance.
- Keep the packaging material out of reach of children and dispose of the material in a safe manner. As with all plastic bags, these are not toys and should be kept away from children and infants.
- If the appliance is not properly installed, a house fire may result. Do not expose the appliance to the elements (rain, etc.) and keep the appliance dry at all times.
- The chimney must be sound and free of cracks and obstructions. Clean your chimney regularly as required.
- Never use gasoline, gasoline-type lantern fuel, kerosene, charcoal lighter fluid, or similar liquids to start or 'freshen up' a fire in this heater. Keep all such liquids well away from the heater while it is in use.
- Your appliance requires periodic maintenance and cleaning. Failure to maintain your appliance may lead to smoke spillage in your home.
- Higher efficiencies and lower emissions will generally result when burning air dried seasoned woods, as compared to wet, green or freshly cut wood. Burning wet unseasoned wood can cause excessive creosote accumulation. When ignited it can cause a chimney fire that may result in a serious house fire.
- The appliance is designed to burn seasoned wood only. Do not burn treated wood, coal, charcoal, colored paper, cardboard, solvents or garbage.
- Burn wood directly on the firebricks. Do not use a grate or elevate the fire.
- Do not store wood within appliance installation clearances or within the space required for re-fueling and ash removal.
- Ashes must be disposed in a metal container with a tight lid and placed on a non-combustible surface well away from the home or structure until completely cool.

ED_005996_00000492-00199

SPECIFICATIONS

Model	Sirocco 20.2 (catalytic)
Height (w/ Pedestal)	33 3/8" (848 mm)
Height (w/ Legs)	31 7/8" (810 mm)
Width	25" (635 mm) (without removable bypass handle)
Depth	27 1/4" (692 mm) (without optional fan kit)
	28 1/8" (715 mm) (with optional fan kit)
Flue collar	6" I.D.
Recommended flue draft	.05" water column (on high burn)
Fire door opening	15 5/8" x 8" (397 mm x 204 mm)
Firebox depth	16" (407 mm) brick to brick, 18 1/2" (470 mm) brick to glass
Firebox width	17 1/2" (445 mm)
Firebox height	10 3/4" (273 mm)
Fire box capacity	1.8 cu. ft.
Recommended Fuel length	16" max. (407 mm)
Wood capacity (approximate):	White oak - 45 lbs. (20.41 kg)
	Fir - 30 lbs. (13.61 kg)
Construction	10 gauge & 1/4" firebox, brick lined 16 gauge outer shields
Shipping Weight (Firebox only)	320 lbs. (145.2 kg)
Shipping Weight (Pedestal only)	45 lbs. (20.4 kg)
Shipping Weight (Legs only)	20 lbs. (9.1 kg)
Chimney recommendation (Minimum)	15' from stove top to chimney cap: Insulated liner recommended

This unit was tested and listed UL 1482-11(R2015) and ULC-S627-00 by OMNI-Test Laboratories.
This manual describes the installation and operation of the Ashford AF20.2 catalytic equipped wood heater.
This heater is certified to comply with the 2020 U.S. Environmental Protection Agency's particulate emission standards using crib wood.

EMISSIONS	CO Average(%)	g/hr
Low Burn	0.20	0.22
Med-low Burn	0.14	0.58
Med-high Burn	0.25	0.93
High Burn	0.23	1.53

Under specific test conditions this heater has been shown to deliver heat at rates ranging from 8900 to 29785 Btu/hr. This wood heater has a manufacturer-set minimum low burn rate that must not be altered. It is against federal regulations to alter this setting or otherwise operate this wood heater in a manner inconsistent with operating instructions in this manual.
This wood heater contains a catalytic combustor, which needs periodic inspection and replacement for proper operation. It is against federal regulations to operate this wood heater in a manner inconsistent with operating instructions in this manual, or if the catalytic element is deactivated or removed.
The combustor supplied with this heater is either a Z0336A-M or Z0334 metal combustor. Consult the catalytic combustor warranty also supplied with this wood heater. Warranty claims should be addressed to:

in Canada	in USA
Blaze King Industries / Valley Comfort Systems Warranty Department, 1290 Commercial Way Penticton, BC Canada V2A 3H5, Ph: 250-493-7444	Blaze King Industries Warranty Department, 146A Street Walla, Walla, Washington 99362, Ph: 509-522-2730

APPLIANCE DIMENSIONS—Sirocco SC20.2 (w/ Pedestal)

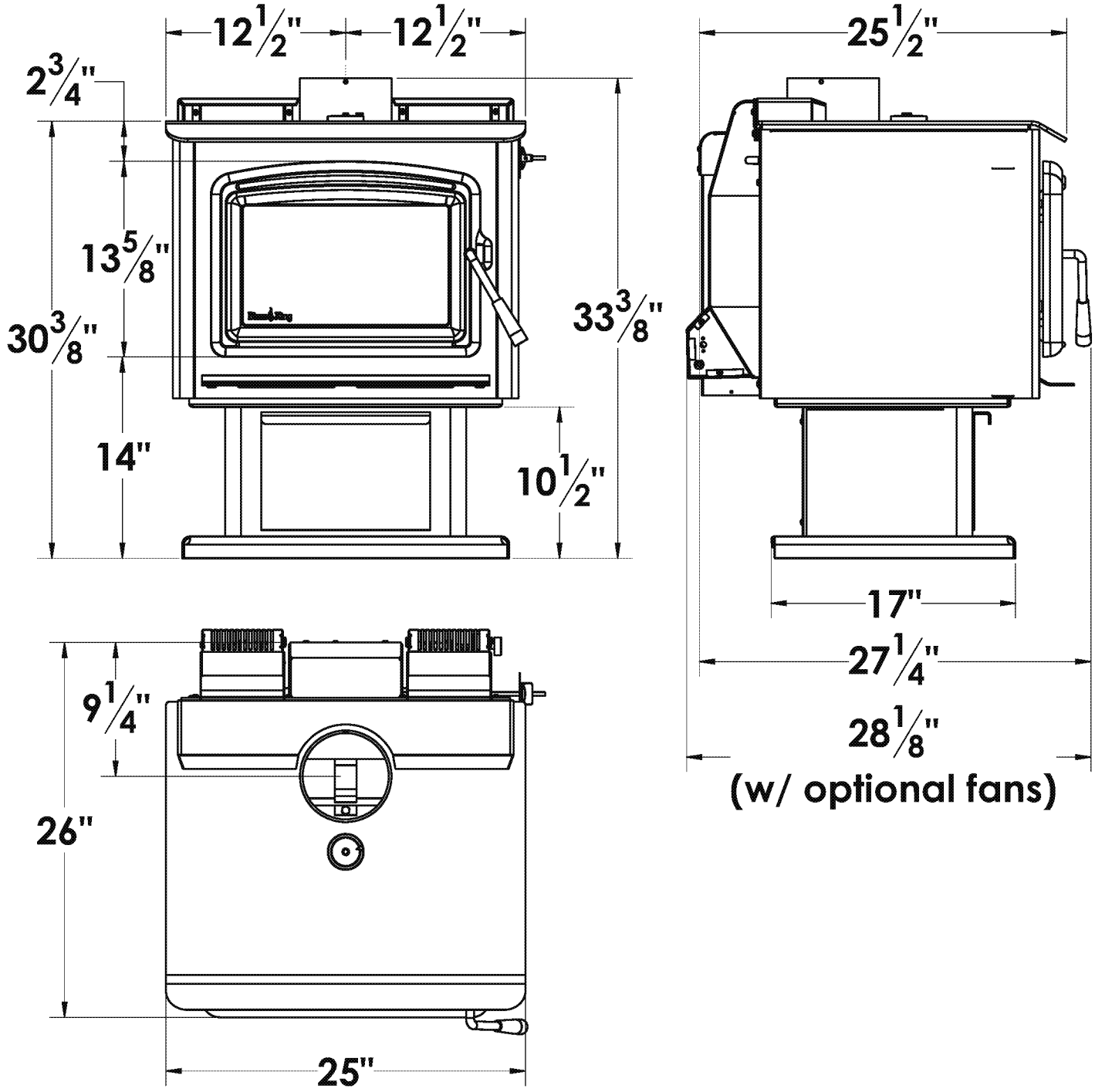

APPLIANCE DIMENSIONS—Sirocco SC20.2 (w/ Legs)

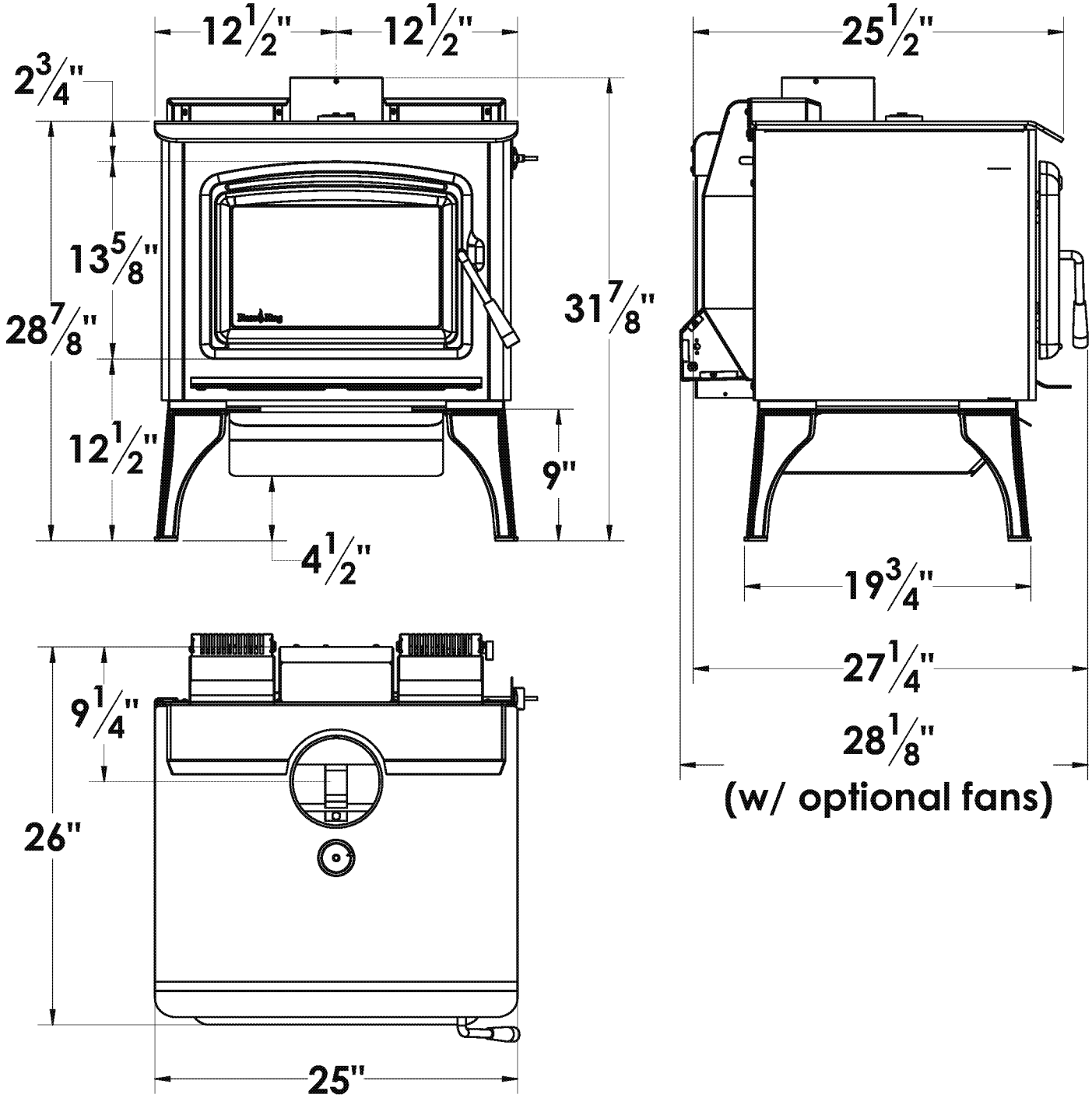

CERTIFICATION LABEL

Tested & Listed By O-T-L Portland Oregon USA
C US
OMNI-Test Laboratories, Inc.
Report #0142WS013E

SIROCCO SC20.2

SN - 23.

BLAZE KING CATALYST STOVE - POÊLE À BOIS CATALYTIQUE

ROOM HEATER, SOLID FUEL TYPE, ALSO FOR USE IN MOBILE HOMES. / APPAREIL APPROUVÉ DE TYPE CARBURANT SOLIDE, AUSSI ADAPTÉ POUR INSTALLER DANS UNE MAISON MOBILE.
SUITABLE FOR MOBILE-HOME INSTALLATION. / CONCU POUR MAISONS MOBILES.
MODEL / MODÈLE: SC20.2
Tested to / Testé: UL 1482-11(R2015) / ULC S627-00
CERTIFIED IN BOTH UNITED STATES AND CANADA / CERTIFIÉ POUR LES ÉTATS-UNIS ET LE CANADA

PREVENT HOUSE FIRES- Install and use only in accordance with Blaze King's installation and operation instructions. Contact local building or fire officials about restrictions and installation inspection in your area. The flue size is 6".
CHIMNEYS: DO NOT CONNECT THIS UNIT TO A CHIMNEY FLUE SERVING ANOTHER APPLIANCE. Except for installation detailed below, use 6" listed factory built chimney suitable for use with solid fuels and conforming to, ULC629 in Canada or UL-103HT in the USA or a masonry residential type chimney.
Mobile Home, residential close clearance, and residential alcove installations require a 6" listed double wall close clearance chimney connector, with matching listed factory built chimney suitable for use with solid fuels and conforming to, ULC629 in Canada or UL-103HT in the USA. Mobile Home installations are only allowed with a roof exit.
Do not install in a sleeping room. Passing through a wall or ceiling requires special methods: see instructions and local building codes.

POUR PRÉVENIR UN INCENDIE - Installer et employer seulement selon le manuel d'installation de Blaze King. Contacter les autorités locales en bâtiments ou en matière de prévention d'incendies au sujet des normes d'inspection et d'installation dans votre secteur. La dimension des conduits de cheminée est de 6".
CHEMINÉE: NE PAS CONNECTER CETTE UNITÉ A UNE CONDUITE DE CHEMINÉE SERVANT UN AUTRE APPAREIL. Excepté pour les situations détaillées ci-dessous, employer une cheminée de 6" homologuée par le fabricant à des fins d'utilisation pour combustibles solides conformément à la norme ULC629 au Canada ou UL-103HT aux Etats-Unis ou employer une cheminée en maçonnerie de type résidentiel.
L'installation dans une maison mobile, en espace restreint ou dans des endroits à faible dégagement, requiert l'utilisation de connecteurs muraux à doubles parois et ayant une épaisseur 6" pour la cheminée. Ceux-ci doivent être homologués par le fabricant à des fins d'utilisation pour combustibles solides conformément à la norme ULC629 au Canada ou UL-103HT aux Etats-Unis. L'installation dans une maison mobile est permise seulement avec une sortie passant par le toit.
Ne pas installer dans une chambre à coucher. Passer à travers un mur ou un plafond requiert une méthode spécifique décrite dans les instructions et dans le code local du bâtiment.

MINIMUM CLEARANCES TO COMBUSTIBLES (See owners manual for complete description of all requirements)
DÉGAGEMENTS MINIMUM AUX COMBUSTIBLES (voir les directives d'installation pour la description complète de toutes les conditions)

Residential Installations / Installations Résidentielles	A	B	C	D	E	F	J
Roof exit, parallel and corner. Sortie de toit, parallèle et coin.	12.75" 324 mm	6.5" 166 mm	25.25" 642 mm	15.875"* 404 mm	6" 153 mm	18.5"* 470 mm	37" 940 mm
Wall exit, parallel and corner. Sortie de mur, parallèle et coin.	12.75" 324 mm	6.5" 166 mm	25.25" 642 mm	15.875"* 404 mm	6" 153 mm	18.5"* 470 mm	37"* 940 mm
Alcove roof exit. Fan kit or rear shield required. Sortie de toit en alcôve. Kit de ventilateur et protection arrière requise.	12.75" 324 mm	6.5" 166 mm	25.25" 642 mm	15.875"* 404 mm			37" 940 mm
Mobile Home Installations / Installation pour Maison Mobile							
Roof exit, parallel and corner. Fan kit or rear shield required. Outside air kit required. Sortie de toit, parallèle et en coin. Kit de ventilateur et protection arrière requise. Kit d'air extérieur requis.	12.75" 324 mm	6.5" 166 mm	25.25" 642 mm	15.875"* 404 mm	6" 153 mm	18.5"* 470 mm	37" 940 mm

*Check with local codes and pipe manufacturers for pipe clearances. In Canada 18" clearances from single wall pipe is required.
* Vérifier avec le code du bâtiment local et avec le manufacturier de tuyaux pour les dégagements. Au Canada un dégagement de 18 po est exigé pour un tuyau à simple paroi.

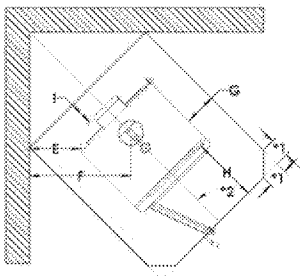

*1= 5" in Canada and 2 1/8" in USA
*2 = 59" in Canada and 57" in USA

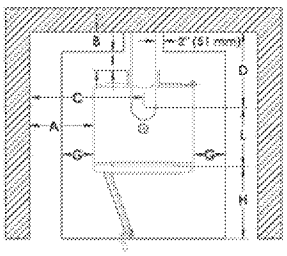

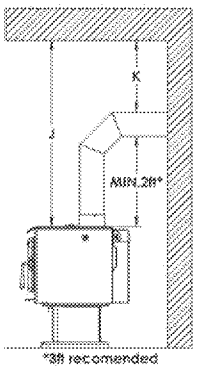

*38 recomended

G - 3.5" (89 mm) in U.S.A.
8" (203 mm) in Canada

H - 16" (406 mm) in U.S.A.
18" (456 mm) in Canada

I - 0" (0 mm) in U.S.A.
8" (203 mm) in Canada

K - 18" (456 mm) *

ALCOVE

min. width / largeur	50.5"
max. depth / profondeur	48"
min. height above stove top / hauteur min. au-dessus du poêle	37"

Floor protection may be any non-combustible material or Listed Floor Protector, and must extend at least 18" (456 mm) in Canada or 16" (406 mm) in U.S.A., in front of the loading door opening: In USA, minimum size is 32" x 40 1/8" (813 mm x 1020 mm), in Canada, minimum size is 41" x 50 1/8" (1042 mm x 1274 mm).
US ENVIRONMENTAL PROTECTION AGENCY Certified to comply with 2020 particulate emission standards using crib wood. (EPA test methods 28R/5G with an emission-rate of .73 g/hr). This wood heater needs periodic inspection and repair for proper operation. Consult the owner's manual for further information. It is against federal regulations to operate this wood heater in a manner inconsistent with operating instructions in the owner's manual, or if the catalytic element is deactivated or removed.
*ONLY OPERATE WITH DOORS CLOSED. Open door to feed fire ONLY. *DO NOT OBSTRUCT COMBUSTION AIR OPENINGS. Do not obstruct the space beneath the heater. For use with solid wood fuel only - do not burn other fuels, this may make the catalyst in the combustor inactive. The performance of the catalytic device or its durability has not been evaluated as part of the certification. Combustor part number: Z0336A-M or Z0334. Provide adequate outside air for combustion. *Replace with only ceramic glass, 5 mm. Thickness. Unit must be installed with Blaze King Leg Kit Z2613BK or Blaze King Pedestal Kit Z3803BK, attach as shown in the installation instructions.

La protection de plancher peut être de n'importe quel matériel non combustible ou Protecteur de plancher homologué, et doit se prolonger au moins de 18" (456 mm) au Canada ou 16" (406 mm) aux États-Unis devant la porte de chargement; Aux États-Unis, la taille minimum est de 32" x 40 1/8" (813 mm x 1020 mm), au Canada la taille minimum est 41" x 50 1/8" (1042 mm x 1274 mm).
L'AGENCE DE PROTECTION ENVIRONNEMENTALE DES U.S. - Certifié conformément aux normes d'émission de particules 2020 , en utilisant du bois machiné (méthodes d'essai EPA 28R / 5G, ASTM E2515 et ASTM E2780, avec un taux d'émission de 0.73 g /hre). Cet appareil de chauffage au bois nécessite des inspections périodiques et des réparations pour un fonctionnement adéquat. Consulter le manuel du propriétaire pour plus d'informations. Il est contre les règlements fédéraux de faire fonctionner cet appareil de chauffage à l'encontre des instructions d'utilisation fournies dans le manuel du propriétaire, ou si l'élément catalytique est enlevé ou désactivé.
*Utiliser le uniquement avec les portes fermées. Ouvrir la porte pour alimenter le feu SEULEMENT. *Ne pas obstruer l'entrée d'air de combustion. Fournir l'apport d'air extérieur adéquat pour alimenter la combustion. Ne pas obstruer l'espace sous l'appareil. Utiliser uniquement avec des combustibles solides - ne pas brûler aucun autre combustible, ce qui peut rendre le catalyseur de la chambre à combustion inactif. La performance du catalyseur ou sa longévité n'a pas été évaluée dans le cadre de la certification. Numéro du catalyseur: Z0336A-M ou Z0334. *Employer seulement le verre en céramique d'une épaisseur de 5mm si le remplacement est nécessaire. L'appareil doit être installé avec le Blaze King kit de jambe Z2613BK ou Blaze King piédestal Kit Z2803BK, attache comme indiqué dans les instructions d'installation.

MANUFACTURED IN

☐ USA:
Blaze King Industries
146A Street
Walla Walla, WA.
99362

☐ CANADA:
Valley Comfort Systems
1290 Commercial Way
Penticton, B.C.
V2A 3H5

MANUFACTURE DATE

JAN ☐	FEB ☐	MAR ☐	APR ☐	MAY ☐	JUN ☐
JUL ☐	AUG ☐	SEP ☐	OCT ☐	NOV ☐	DEC ☐
2018 ☐	2019 ☐	2020 ☐	2021 ☐	2022 ☐	2023 ☐

170.0236[1017].indd

SAFETY PRECAUTIONS

IF THIS BLAZE KING APPLIANCE IS NOT PROPERLY INSTALLED OR OPERATED, A HOUSE FIRE MAY RESULT. TO REDUCE THE RISK OF FIRE, FOLLOW THE INSTALLATION INSTRUCTIONS. CONTACT LOCAL BUILDING OR FIRE OFFICIALS ABOUT RESTRICTIONS AND INSTALLATION INSPECTION REQUIREMENTS IN YOUR AREA.

PLEASE READ THIS ENTIRE MANUAL BEFORE YOU INSTALL AND USE YOUR NEW APPLIANCE. FAILURE TO FOLLOW INSTRUCTIONS MAY RESULT IN PROPERTY DAMAGE, BODILY INJURY, OR EVEN DEATH.

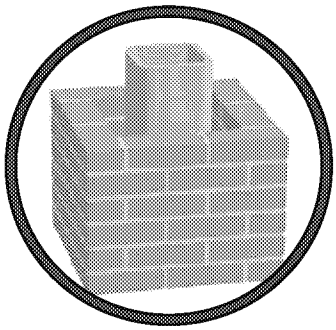

This appliance must be connected to a listed high temperature **(ULC629 IN CANADA OR UL-103HT IN THE USA)** residential type factory built solid fuel chimney or an approved masonry chimney with a flue liner.
Chimney and chimney connector must be in good condition and kept clean.
NEVER vent the stove to other rooms of the building. Must be vented to the outside ONLY.
NEVER use a chimney or chimney connector smaller then the stove exhaust, unless approved by your local inspector.
NEVER vent the stove into a "Class B" gas vent chimney.
DO NOT CONNECT IN CONJUNCTION WITH ANY AIR DISTRIBUTION DUCTWORK UNLESS SPECIFICALLY APPROVED FOR SUCH INSTALLATIONS.

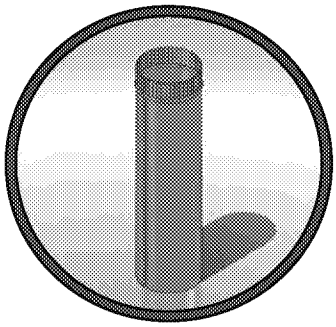

Inspect the chimney connector and chimney regularly during each burning season and clean when necessary.
DO NOT CONNECT THIS UNIT TO A CHIMNEY FLUE SERVING ANOTHER APPLIANCE.

NEVER intentionally start a chimney fire to clean the flue.

When installed in a mobile home, this appliance must be bolted to the floor and provided with outside air.

WARNING: DO NOT INSTALL IN A SLEEPING ROOM
CAUTION: THE STRUCTURAL INTEGRITY OF THE MOBILE HOME FLOOR, WALL, AND CEILING/ROOF MUST BE MAINTAINED.

Check with local building officials.

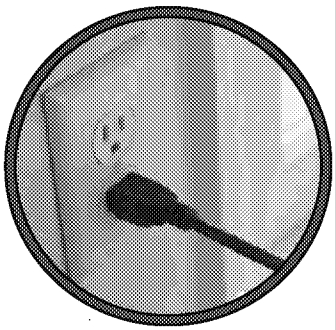

If the Optional Fan Kit is installed, connect this unit to a properly grounded, 110-volt electrical outlet. Do not route the power cord in front of or under the appliance.

Do not make any changes or modifications to an existing masonry fireplace or chimney to install this appliance. Do not make any changes to the appliance to increase combustion air.

SAFETY PRECAUTIONS

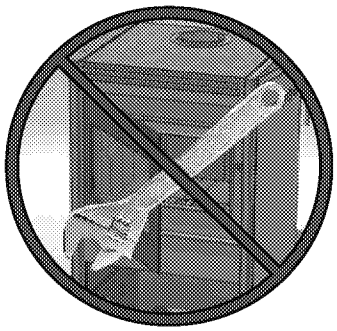

Never try to repair or replace any part of this appliance unless instructions are given in this manual. All other work must be done by a trained technician.

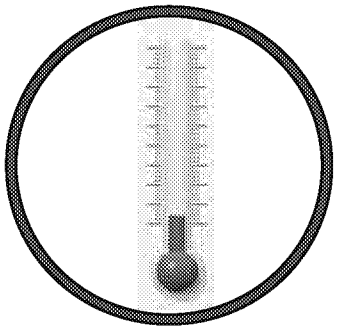

Allow the appliance to cool down before carrying out any maintenance or cleaning.

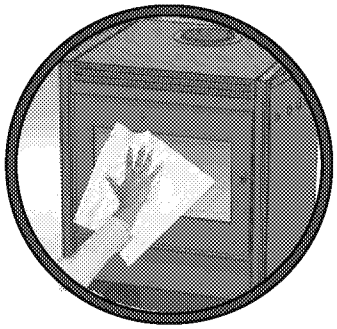

Maintain the door and glass seal and keep them in good condition. A leaking door seal will shorten burn times and may harm the combustor.

Avoid placing wood against the glass when loading. Do not slam the door or strike the glass.

Do not throw this manual away. This manual has important operating and maintenance instructions that you will need at a later time. Always follow the instructions in this manual.

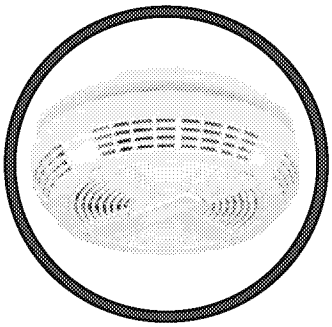

It is required in some jurisdictions to install smoke and carbon monoxide detectors where heaters are installed. Install at least one smoke detector on each floor of your home to ensure your safety. It should be located away from the wood appliance and close to the sleeping areas. Locating a smoke detector too close to a wood appliance can cause the smoke detector alarm to sound if a puff of smoke is emitted while the wood appliance door is open during reloading. Follow the smoke detector manufacturers placement, installation, and maintenance instructions.

Do not place clothing or other flammable items on or near this appliance.

DO NOT OVER FIRE THIS HEATER. Attempts to achieve heat output rates that exceed heater design specifications can result in permanent damage to the heater and to the catalytic combustor. Over firing the appliance may cause a house fire. Never burn the appliance so hot that the appliance or chimney connector begins to glow.

Do not use a grate or other device to elevate the fire off of the firebox floor. Burn the fire directly on the bricks.

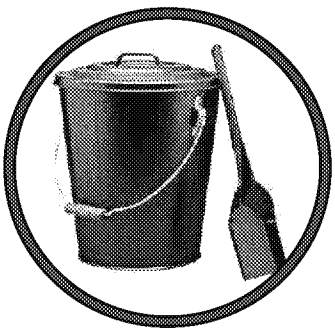

Ashes should be placed in a steel container with a tightly fitting lid and moved outdoors immediately. If the ashes are disposed of by burial in soil or otherwise locally dispersed, they should be retained in the closed container until all cinders have thoroughly cooled. Other waste shall not be placed in this container.

SAFETY PRECAUTIONS

This appliance is designed and approved for burning cord wood only. DO NOT burn trash, garbage; artificial or paper logs; gift wrappings; coal; lighter fluids; chemical cleaners; chemical starters; treated or painted wood; salt water driftwood or foil-backed paper such as gum wrappers or cigarette packages; lawn clippings or yard waste; materials containing rubber (including tires), plastic, asbestos; waste petroleum products, paints or paint thinners, or asphalt products; construction or demolition debris; railroad ties or pressure-treated wood; manure or animal remains; unseasoned wood or paper products, cardboard, plywood, or particleboard. The prohibition against burning these materials does not prohibit the use of fire starters made from paper, cardboard, saw dust, wax and similar substances for the purpose of starting a fire in an affected wood heater. Burning these materials may result in the release of toxic fumes or render the heater ineffective and cause smoke. Burn natural wood only. It will void all warranties and safety listings and may damage the combustor.

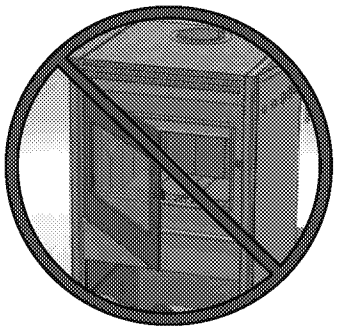

Never burn the appliance with the loading door open. Leaving the door cracked open may damage the combustor.

Never block free airflow through vents on this appliance.

Do not use chemicals or fluids to start the fire. Never use gasoline, gasoline-type lantern fuel, kerosene, charcoal lighter fluid, or similar liquids to start or 'freshen up' a fire in this heater. Keep all such liquids well away from the heater while it is in use. Some fuels could generate carbon monoxide and are very dangerous.

HOT WHILE IN OPERATION. KEEP CHILDREN, CLOTHING AND FURNITURE AWAY.
CONTACT MAY CAUSE SKIN BURNS.
Do not touch the appliance when it is hot and educate all children of the danger of a high temperature appliance. Young children should be supervised when they are in the same room as the appliance.

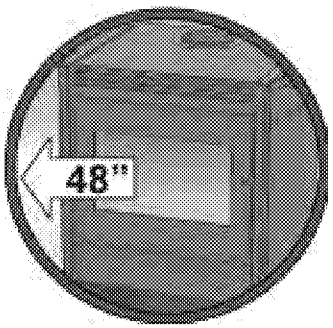

Keep furniture, curtains, wood, paper and other combustibles a minimum of 48in (1219mm) away from the front of the appliance. ALSO, DO NOT STORE COMBUSTIBLES UNDER THE APPLIANCE (WOOD, PAPER etc.).

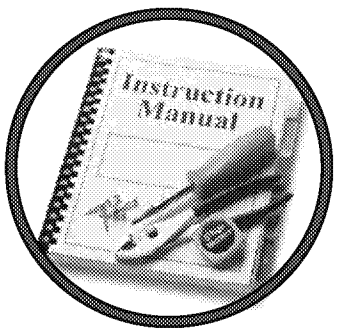

This appliance must be properly installed to prevent the possibility of a house fire. The instructions must be strictly adhered to. Do not use makeshift methods or compromise in the installation.

Contact local building officials to obtain a permit and information on any installation restriction or inspection requirements in your area. Notify your insurance company as well.

⚠WARNING

- **BEFORE INSTALLING THIS APPLIANCE, CONTACT THE LOCAL BUILDING OR FIRE OR OTHER AUTHORITY HAVING JURISDICTION AND FOLLOW THEIR GUIDELINES.**
- **THIS APPLIANCE MUST BE INSTALLED BY A QUALIFIED INSTALLER. FOLLOW THE INSTALLATION DIRECTIONS. DO NOT OPERATE WITHOUT FULLY ASSEMBLING ALL COMPONENTS.**
- **IF THIS APPLIANCE IS NOT PROPERLY INSTALLED, A HOUSE FIRE MAY RESULT.**
- **THIS APPLIANCE IS HOT WHEN OPERATED AND CAN CAUSE SEVERE BURNS IF CONTACTED. CHILDREN AND PETS MUST BE KEPT FROM TOUCHING THE APPLIANCE WHEN IT IS HOT.**
- **COMBUSTIBLE MATERIAL SUCH AS FIRE WOOD, WET CLOTHING, ETC. PLACED TOO CLOSE CAN CATCH FIRE. OBJECTS PLACED IN FRONT OF THE APPLIANCE MUST BE KEPT A MINIMUM OF 48"(1219 MM) FROM THE FRONT OF THE APPLIANCE.**

Blaze King grants no warranty, implied or stated, for the installation or maintenance of the appliance and assumes no responsibility of any consequential damage(s).

NATIONAL FIREPLACE INSTITUTE NFI CERTIFIED www.nficertified.org

We recommend that our products be installed and serviced by professionals who are certified in the U.S. by the National Fireplace Institute® (NFI) as NFI Specialists or who are certified in Canada by Wood Energy Technical Training (WETT).

Wood Energy Technical Training

PARTS INCLUDED WITH THE SIROCCO
1. Poker
2. Manual Kit (w/ warranty cards, thermometer, fire starter, bypass handle)

OPTIONAL EQUIPMENT	
1. Convection Deck (Z3815)	2. Fan Kit (Z2514)
3. Rear Shield (Z4015)	4. Leg Model Ash Pan (Z3820)
5. Outside air kit (Z1726B)	

FLOOR PROTECTION

If the stove sits on a combustible floor, a non-combustible shield must be used underneath the stove and extending 16" out from the front and 8" on either side of the fuel-loading door in the USA. In Canada a non-combustible shield must be used underneath the stove and extending 8" on either side and rear and 18" out in front of the loading door.

A non-combustible shield is also required underneath the chimney connector and extending at least 2" (50.8mm) on either side of the chimney connector.

See the next page for minimum sizes depending on model. This floor protection is required to prevent sparks from falling onto the combustible floor. See CSA B365-M87). **This product does not require thermal hearth pad protection.**

MINIMUM CLEARANCES for SC20.2

Residential Installations	A	B	C	D	E	F	J
Roof exit, parallel and corner.	12.75" 324 mm	6.5" 166 mm	25.25" 642 mm	15.875"* 404 mm	6" 153 mm	18.5"* 470 mm	37" 940 mm
Wall exit, parallel and corner.	12.75" 324 mm	6.5" 166 mm	25.25" 642 mm	15.875"* 404 mm	6" 153 mm	18.5"* 470 mm	37"* 940 mm
Alcove, roof exit. Fan kit or rear shield required.	12.75" 324 mm	6.5" 166 mm	25.25" 642 mm	15.875"* 404 mm			37" 940 mm
Mobile Home Installation							
Roof exit, parallel and corner. Fan kit or rear shield required. Outside air kit required.	12.75" 324 mm	6.5" 166 mm	25.25" 642 mm	15.875"* 404 mm	6" 153 mm	18.5"* 470 mm	37" 940 mm

*** Check with local codes and pipe manufacturer for pipe clearances. In Canada, 18" clearances from single wall pipe is required.**

Clearances may only be reduced by means approved by the regulatory authority

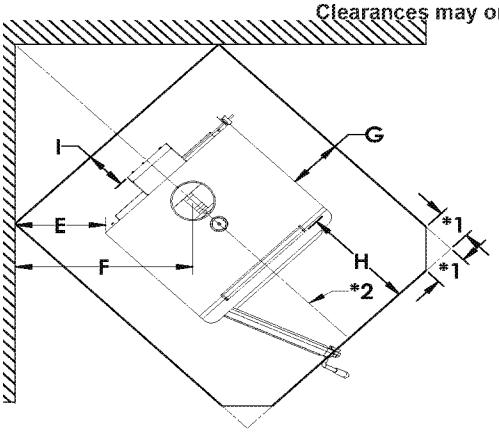

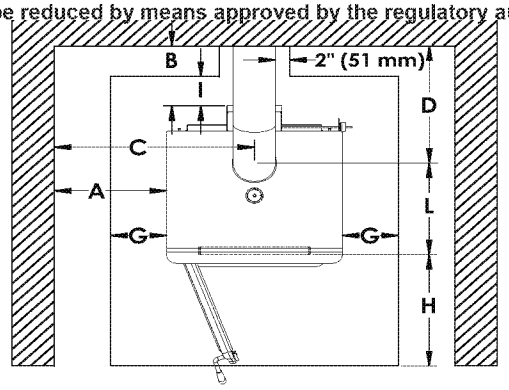

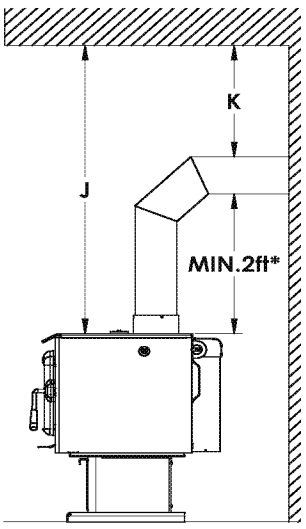

***1= 5" in Canada and 2 1/8" in USA**
***2 = 59" in Canada and 57" in USA**

***3ft recomended**

G = 3 1/2" (89mm) in USA 8" (203mm) in Canada	H = 16" (406mm) in USA 18" (456mm) in Canada	I = 0" (0mm) in USA 8" (203mm) in Canada	K = 18" (456mm) for single wall pipe in Canada

Ember protection shield (not required to have an insulation value) or
a listed UL 1618 Type 1 floor protector must have a minimum size of:

In USA: 32" x 40 1/8" (813 mm x1020 mm)
In Canada: 41" x 50 1/8"(1042 mm x 1274 mm)

Alcove minimum width 50 1/2", maximum depth 48", minimum above stove top 37"

This stove must be installed in compliance with all local codes and regulations.

COMBUSTION AIR

Ensure adequate combustion air allowing for all other exhausting type appliances in the dwelling (range hoods, dryers, etc.). In air tight homes and modern constructions, careful considerations must be taken into account when using a wood burning appliance. Heat recovery ventilators (HRV) systems along with constant running pan motors in air handlers must be taken into account when balancing the system. Failure to do so may result in air starvation, smoke spillage and carbon monoxide threats. Consult a HVAC specialist for proper installation.Ensure adequate combustion air allowing for all other exhausting type appliances in the dwelling (range hoods, dryers, etc.). In airtight houses it is recommended to install a fresh air inlet into the room where the appliance is located, to prevent air starvation.

DRAFTING PERFORMANCE

Draft is the force which moves air from the appliance up through the chimney. The amount of draft in your chimney depends on the length of the chimney, local geography, nearby obstructions and other factors. External forces, such as wind, barometric pressure, topography, or factors of the home (negative pressure from exhaust fans, chimneys, air infiltration, etc) may adversely affect draft.

Too much draft may cause excessive temperatures in the appliance and may damage the heater. An uncontrollable burn or excessive temperature indicates excessive draft.

Inadequate draft may cause back puffing into the room and 'plugging' of the chimney. Inadequate draft will cause the appliance to leak smoke into the room through appliance and chimney connector joints.
Blaze King cannot be responsible for external forces leading to less than optimal performance.

ROLE OF THE CHIMNEY

Without a proper installed chimney, this appliance will not burn correctly.

The role of the chimney is to pull the proper amount of air into the firebox for the purpose of complete combustion. Incomplete combustion will lead to more smoke and pollution of the outside air. A proper operating chimney will allow the user to enjoy peak performance at all burn operating levels from low to high. Blaze King therefore recommends vertical installations with a minimum length of 15' from stove top to chimney cap. In all freestanding stove installations, use double wall stove pipe from the stove top to the ceiling support box. The use of double wall stove pipe does allow for reduced clearances, however most importantly, it helps to keep the chimney warm and improve draft.

For wall exits, the same suggestion applies. With the addition of the recommendation to use two 45 degree elbows rather than a single 90 degree elbow. The use of two 45 degree elbows will allow for both a smoother transition to the exterior chimney and will also shorten the horizontal run to the outside chimney. A minimum 36" rise is recommended prior to any elbows being used. When possible, outside chimney systems should be isolated from direct exposure to winter weather by building a chase around the chimney, observing all clearances as specified by the venting manufacturer. Doing so will help to keep the chimney warmer and improve draft.

ED_005996_00000492-00209

VENTING SYSTEMS

The venting system consists of a chimney connector and a chimney. These get extremely hot during use. Temperatures inside the chimney may exceed 2000 degrees in the event of a creosote fire. To protect against the possibility of a house fire, the chimney connector and chimney must be properly installed and maintained. A listed thimble must be used when a connection is made through a combustible wall to a chimney. A chimney support package must be used when a connection is made through the ceiling to a listed prefabricated chimney. These accessories are absolutely necessary to provide safe clearances to combustible wall and ceiling material.

This stove may be connected to a lined masonry chimney or a listed factory built chimney suitable for use with solid fuels and conforming to, ULC629 in Canada or UL-103HT in the USA. Do not connect it to a chimney serving another appliance. To do so will affect the safe operation of both appliances, and will void the stove warranty. You must comply with the local authority having jurisdiction and/or in Canada, CSA installation standard B365-M87.

The chimney connector must be 6" diameter, 24 MSG Black/Blue steel. Do not use aluminum or galvanized steel. They cannot properly withstand the extreme temperatures of a wood fire. The chimney connector between the stove and the chimney should be as short and direct as possible.

The chimney connector must be attached to either an approved masonry chimney or one of the listed factory built chimneys suitable for use with solid wood fuel. All joints must be tight and fastened with sheet metal screws.

⚠WARNING

THE CHIMNEY CONNECTOR IS TO BE USED ONLY WITHIN THE ROOM, BETWEEN THE STOVE AND CEILING / WALL. NEVER USE A CHIMNEY CONNECTOR TO PASS THROUGH AN ATTIC OR ROOF SPACE, CLOSET OR SIMILAR CONCEALED SPACE, OR A FLOOR, OR CEILING. AN EFFECTIVE VAPOR BARRIER MUST BE MAINTAINED AT THE LOCATION WHERE THE CHIMNEY OR COMPONENT PENETRATES TO THE EXTERIOR OF THE STRUCTURE. ALWAYS MAINTAIN THE MINIMUM CLEARANCES TO COMBUSTIBLES AS REQUIRED BY THE APPLICABLE BUILDING CODES.

CONNECTION TO A METAL PREFABRICATED CHIMNEY

When a metal prefabricated chimney is used, the manufacturer's installation instructions must be followed precisely. You must also purchase (from the same manufacturer) and install the ceiling support package or wall pass through and "T" section package, fire stops (when needed), insulation shield, roof flashing, chimney cap, etc. Maintain the proper clearance to the structure as recommended by the manufacturer. This clearance is usually a minimum of 2 inches, although it may vary by manufacturer or for certain components.

There are basically two methods of metal chimney installation. One method is to install the chimney inside the residence through the ceiling(s) and the roof. The other method is to install an exterior chimney that runs up the outside of the residence **(not recommended)**. If it is necessary to run the chimney outside, build an outside chase around the chimney.

The chimney must be the required height above the roof or other obstruction for safety and for proper draft operation. The requirement is that the chimney must be at least 3 feet higher than the highest point where it passes through the roof and at least 2 feet higher than the highest part of the roof or structure that is within 10 feet of the chimney, measured horizontally (**Fig. 1**). The height requirement is necessary in the interest of safety and does not necessarily assure proper flue draft. Use a minimum total system height of 15 feet, measured from the stove flue collar to the top of the chimney, not including the chimney cap.

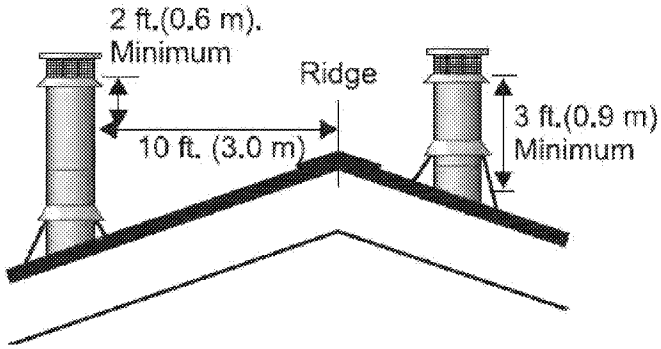

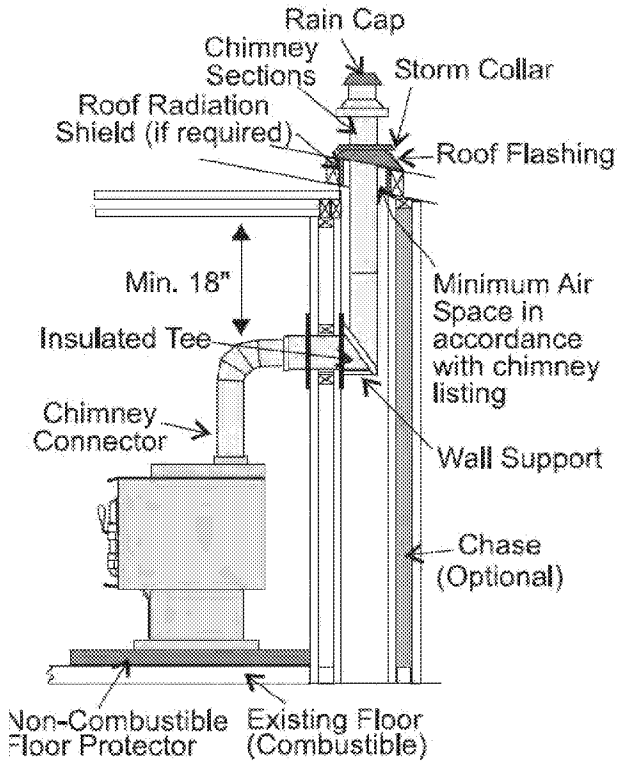

Horizontal Installation

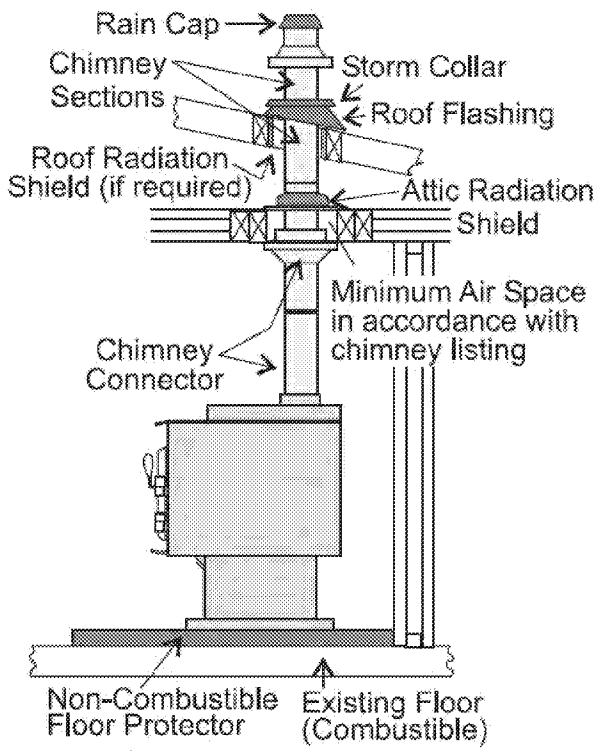

Standard Ceiling Installation

ED_005996_00000492-00211

CONNECTION TO A MASONRY CHIMNEY

Masonry chimney***

Ensure that a masonry chimney meets the minimum standards (NFPA) by having it inspected by a professional. Make sure there are no cracks, loose mortar or other signs of deterioration and blockage. Have the chimney cleaned before the stove is installed and operated. When connecting the stove through a combustible wall to a masonry chimney, special methods are needed.

In Canada, the wall cut away is to provide 18" clearance for the connector. The resulting space must remain empty. A flush mounted sheet metal cover may be used on one side only. If covers are to be used on both sides, each cover must be mounted on noncombustible spacers at least 1" clear of the wall.

*****Blaze King recommends the use of a Stainless steel liner, preferably insulated, inside a masonry chimney. This to maintain proper draft and overall better operation of the unit.**

Your local dealer or local jurisdiction can provide details of approved methods of passing a chimney connector through a combustible wall in your area. In USA, the National Fire Protection Association has minimum standards to comply with. In Canada , this type of installation must conform to CAN/CSA-B365, Installation Code for Solid Fuel Burning Appliances and Equipment.

TYPICAL

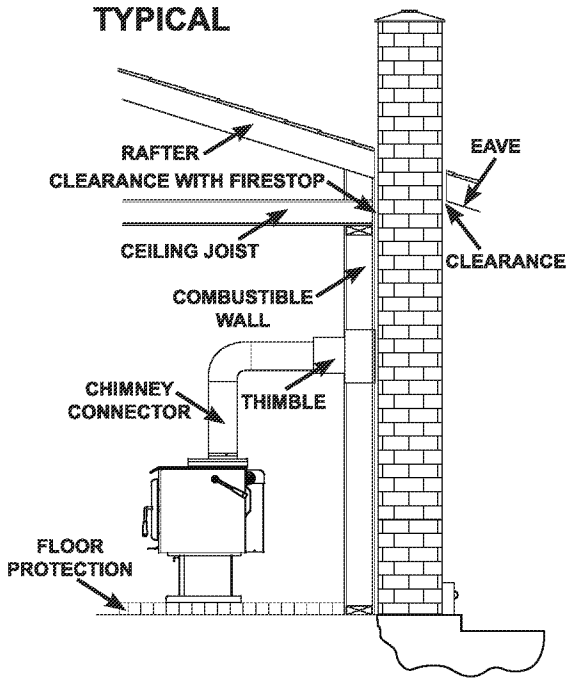

BLAZEKING RECOMMENDED

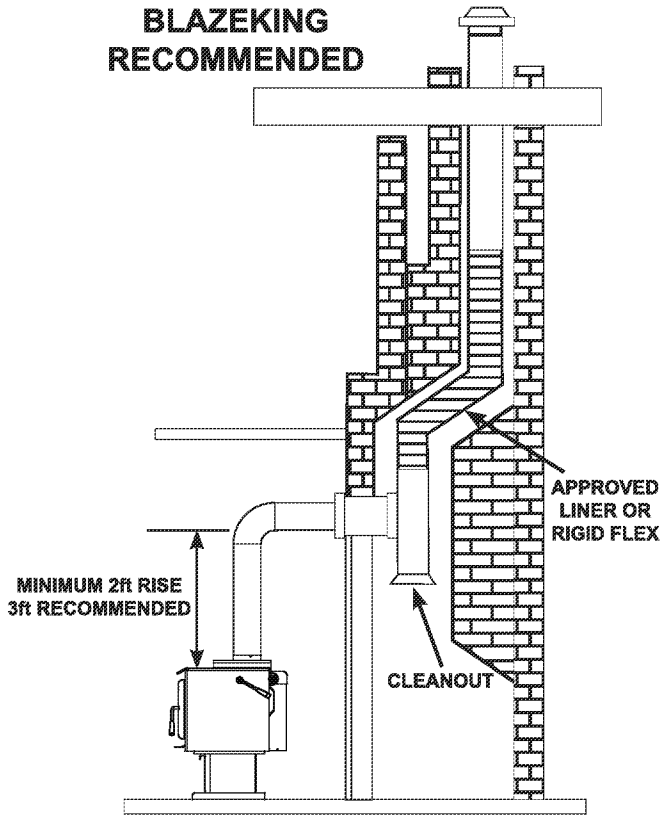

ED_005996_00000492-00212

RECOMMENDED FLUE HEIGHTS

1. At sea level the minimum height is a 15 ft (4.6 m) straight run.
2. Add the following vertical height to the flue to compensate for:
   45° elbow = 1.0 ft (.30 m)
   90° elbow = 2.0 ft (.61 m)
   "T" section= 3.0 ft (.91 m)
3. Each foot of horizontal run = 2 ft (.61 m) of vertical rise.

Example:	One 90° elbow	= 2ft (.61 m)
	2ft Horizontal run	= 4ft (1.2 m)
	One base "T"	= 3ft (.91 m)
	Total height addition	= 9ft (2.7 m) at sea level

MINIMUM RECOMMENDED FLUE HEIGHT				
ELEVATION ABOVE SEA LEVEL	NUMBER OF ELBOWS			
	0	2 X 15°	2 X 30°	2 X 45°
0 - 1000 ft 0 - 305 m	15 4.6 m	16 4.9 m	18 5.5 m	19 5.8 m
1000 - 2000 ft 305 - 610 m	15.5 4.7 m	16.5 5.0 m	18.5 5.6 m	19.5 5.9 m
2000 - 3000 ft 610 - 914 m	16 4.9 m	17 5.2 m	19 5.8 m	20 6.1 m
3000 - 4000 ft 914 - 1219 m	16.5 5.0 m	17.5 5.3 m	19.5 5.9 m	20.5 6.2 m
4000 - 5000 ft 1219 - 1524 m	17 5.2 m	18 5.5 m	20 6.1 m	21 6.4 m
5000 - 6000 ft 1524 - 1829 m	17.5 5.3 m	18.5 5.6 m	20.5 6.2 m	21.5 6.6 m
6000-7000 1829 - 2134 m	18 5.5 m	19 5.8 m	21 6.4 m	22 6.7 m
7000 - 8000 ft 2134 - 2438 m	18.5 5.6 m	19.5 5.9 m	21.5 6.6 m	22.5 6.9 m
NOTE: No more than one offset (two elbows allowed). Two 45°elbows equal one 90° elbow				

Please note: These are only guidelines. Please refer to the section in the manual pertaining to draft. Every installation is unique and can be influenced by topographical and geographical phenomena.
The use of a manometer and an understanding of pressure planes and the stack effect are imperative in planning and executing a successful installation.

MOBILE HOME (AND RESIDENTIAL ALCOVE INSTALLATIONS)
Either Rear Shield OR Fan kit are required for these installations (See next page for kits and part numbers). Mobile home installations also requires the Outside Air Kit: Z1726B. They are easiest to mount before the stove is installed. See instructions packed with each kit.**NOTE: UNDER NO CIRCUMSTANCES SHOULD THE FRESH AIR TUBE EVER BE INSTALLED HIGHER THAN THE BOTTOM OF THE APPLIANCE FIREBOX FLOOR**
When a metal prefabricated chimney is used, the manufacturer's installation instructions must be followed precisely. You must also purchase (from the same manufacturer) and install the ceiling support package, fire stops (when needed), insulation shield, roof flashing, chimney cap, etc. Maintain the proper clearance to the structure as recommended by the manufacturer.

Chimney connector must be double wall close clearance type with either ULC629 or ULCS610 designation. Single wall pipe is not allowed in Mobile Homes or in Alcove Installations. Insulated chimney components must be a listed factory built chimney suitable for use with solid fuels and conforming to, ULC629 in Canada or UL-103HT in the USA. For Mobile home, the chimney needs to be removable to allow for transportation of the mobile home.

⚠WARNING

DO NOT INSTALL IN SLEEPING ROOM. THE STRUCTURAL INTEGRITY OF THE MOBILE HOME FLOOR, WALL AND CEILING / ROOF MUST BE MAINTAINED.

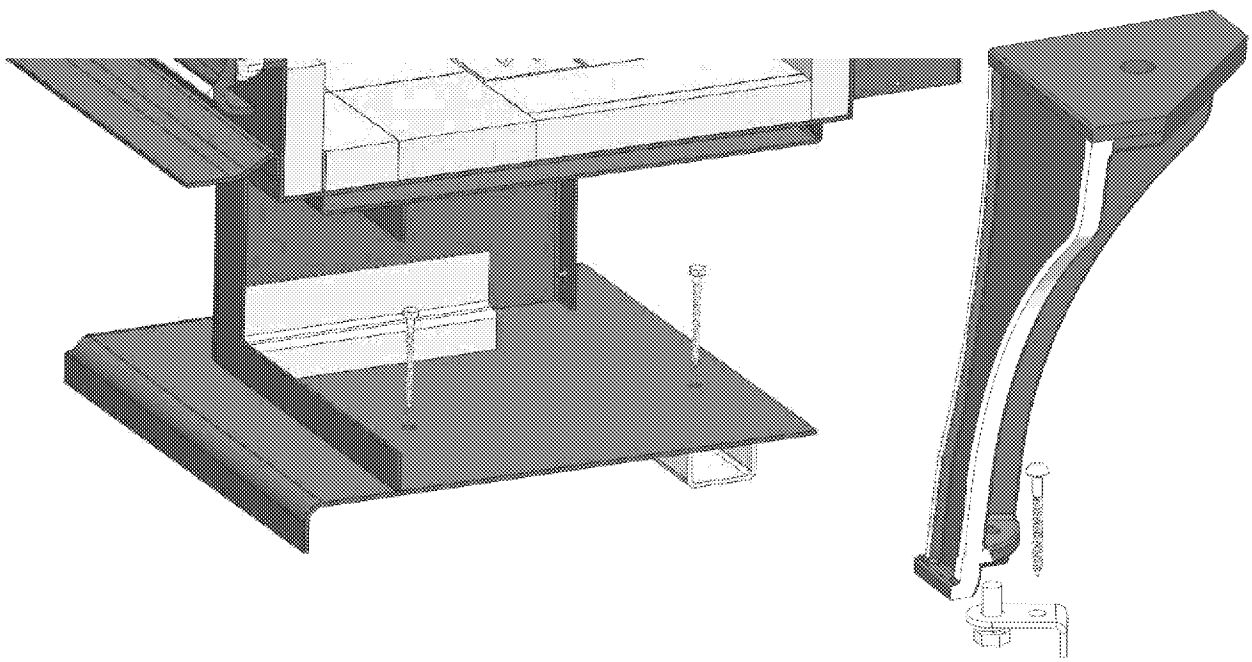

In mobile home installations, the stove must be securely fastened to the floor using the tie-downs provided in the Outside Air kit. (For the pedestal model, remove the ash drawer to access the screw down holes. For the Leg model, use the Leg Anchor Kit (P/N ZR8039) to secure stove to floor.)
ALSO, a #8 ground wire must be attached to the stove and an appropriate ground.

OPTIONAL ACCESSORIES
Outside air kit, rear shield or fan kit are optional accessories, but are required for the following installations:

MOBILE HOME INSTALLATION — Requires outside air kit and fan kit or rear shield
RESIDENTIAL ALCOVE — Requires fan kit or rear shield

REAR SHIELD KIT (Z4015)
EITHER this rear shield OR the fan kit (P/N Z2514) is REQUIRED FOR:
MOBILE HOME, any installation
RESIDENTIAL ALCOVE
TOOLS NEEDED FOR INSTALLATION: Phillips or square drive screwdriver.
INSTALLATION : The rear shield goes across the back of the stove, just below the thermostat knob. Place shield into position, insert and tighten the two #10 X 1 1/4" screws provided.

FAN KIT (P/N Z2514)
EITHER this fan kit or the rear shield (Z4015) is REQUIRED FOR:
MOBILE HOME, any installation
RESIDENTIAL ALCOVE
NOTE: Fan kit should be installed before the stove is placed into position
INSTALLATION: See instructions included with fan kit. Tools needed: Square (Robertson no. 2) screw driver and a 5/32" allen wrench.

ELECTRICAL CONNECTION
Your Blaze King fan kit is equipped with a three-prong (grounded) plug to decrease shock hazard.
THIS PLUG SHOULD BE INSERTED DIRECTLY INTO A PROPERLY-GROUNDED, THREE-HOLE RECEPTACLE. DO NOT CUT OR REMOVE THE GROUNDING PRONG FROM THIS PLUG. Do not route the power cord in front or under the stove.

OUTSIDE AIR KIT (P/N 1726B)
REQUIRED FOR: MOBILE HOME (any installation)
The outside air inlet hose is a flexible tube to bring outside air for combustion into the stove from outside the residence, through the wall or up through the floor. The flexible tube will allow some adjustment over or around floor joists or plumbing. **DO NOT CHANGE THE STRUCTURAL INTEGRITY OF THE FLOOR.** This air hose must be kept open at all times to provide outside air for combustion.
INSTALLATION:
See instructions included with the outside air kit. Tools needed: 1/4" or 3/8" drill motor, saber saw, saber saw wood & metal blades, 5/16" nut driver or wrench, 7/16" wrench, small tube of hi-heat silicone.

ED_005996_00000492-00215

PEDESTAL (Z3803BK)
NOTE: EITHER PEDESTAL OR LEG KIT(see next page) MUST BE INSTALLED BEFORE STOVE CAN BE DUCTED AND READY FOR USE.

TOOLS NEEDED FOR INSTALLATION:
5/32" allen key and a square (Robertson #2) screwdriver.
INSTALLATION

1. Lean stove backwards to gain access to stove bottom.
2. Remove "ASH CHANNEL SEAL" by unscrewing the four #10 screws. Remove the 1/4" nut and bottom plate **Fig. A**.
3. Thread all four 1/4"-20 button head cap screws into the stove base until halfway (included w/ pedestal kit).
4. Remove the ash drawer from the assembled pedestal. (Can also remove pedestal back panel if needed)
5. Utilizing the key holes on the top of the pedestal body, slide the pedestal into place by pushing it against the bottom of the stove and then pushing it towards the back of the stove (use the half turned in screws as guide pins) **Fig. B**.
6. Once the pedestal is in position, finish tightening the four screws into the stove bottom and lift stove into its upright position.
7. Insert the ash drawer into the pedestal front. (Reattach pedestal back panel if removed during install)
8. Insert ash plug from pedestal kit into stove firebox.

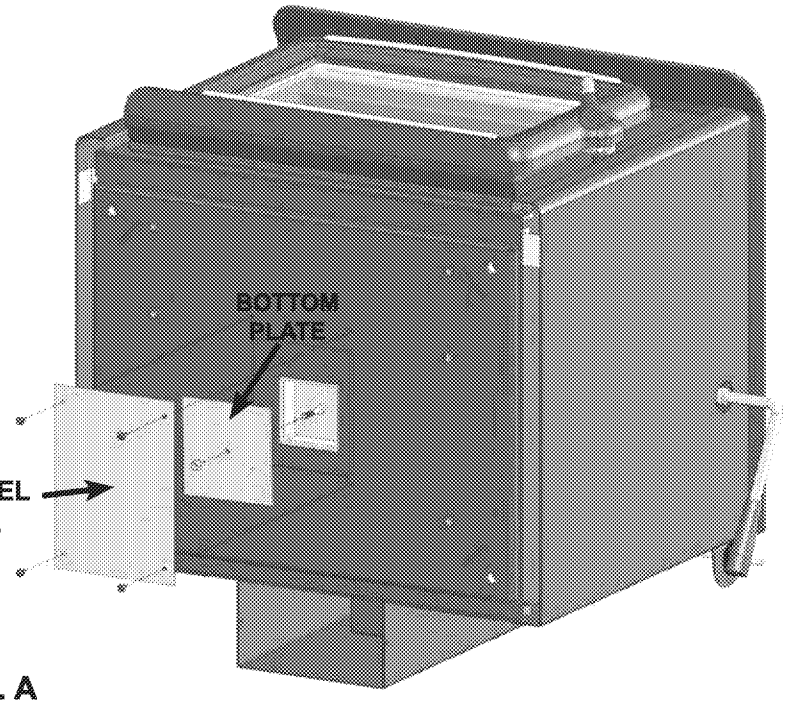

Fig. A

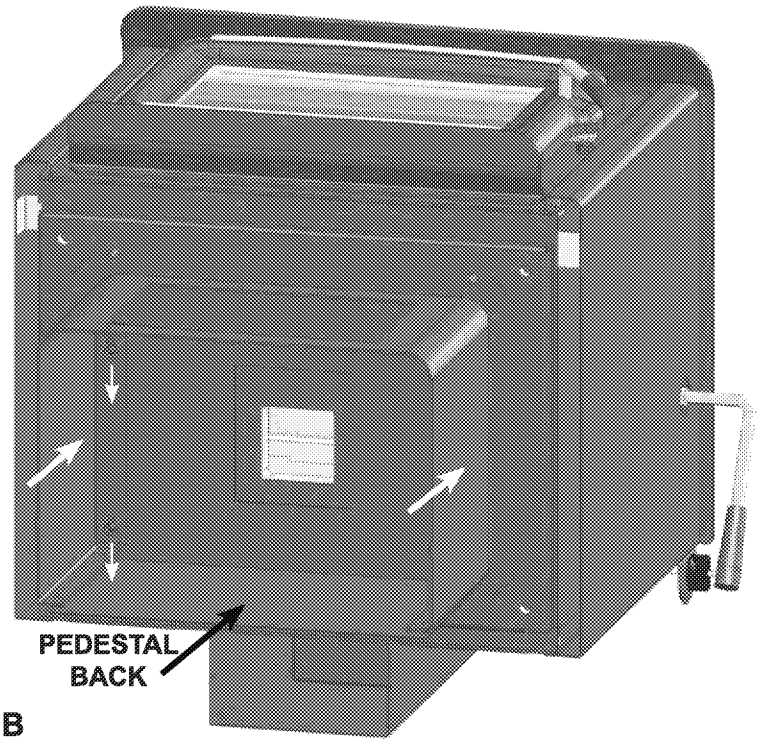

Fig. B

ED_005996_00000492-00216

LEG KIT (Z2613BK)
NOTE: EITHER LEG KIT OR PEDESTAL (SEE PREVIOUS PAGE) MUST BE INSTALLED BEFORE STOVE CAN BE DUCTED AND READY FOR USE.

TOOLS NEEDED FOR INSTALLATION: 3/4" wrench or socket wrench

INSTALLATION

1. Lean stove backwards to gain access to stove bottom.
2. Position each leg and leg plate parallel to stove base and fasten to stove using the supplied washer, lock washer, and 1/2" bolt.
3. Lift stove back to its upright position.
4. Adjust carriage bolts in order to level stove.

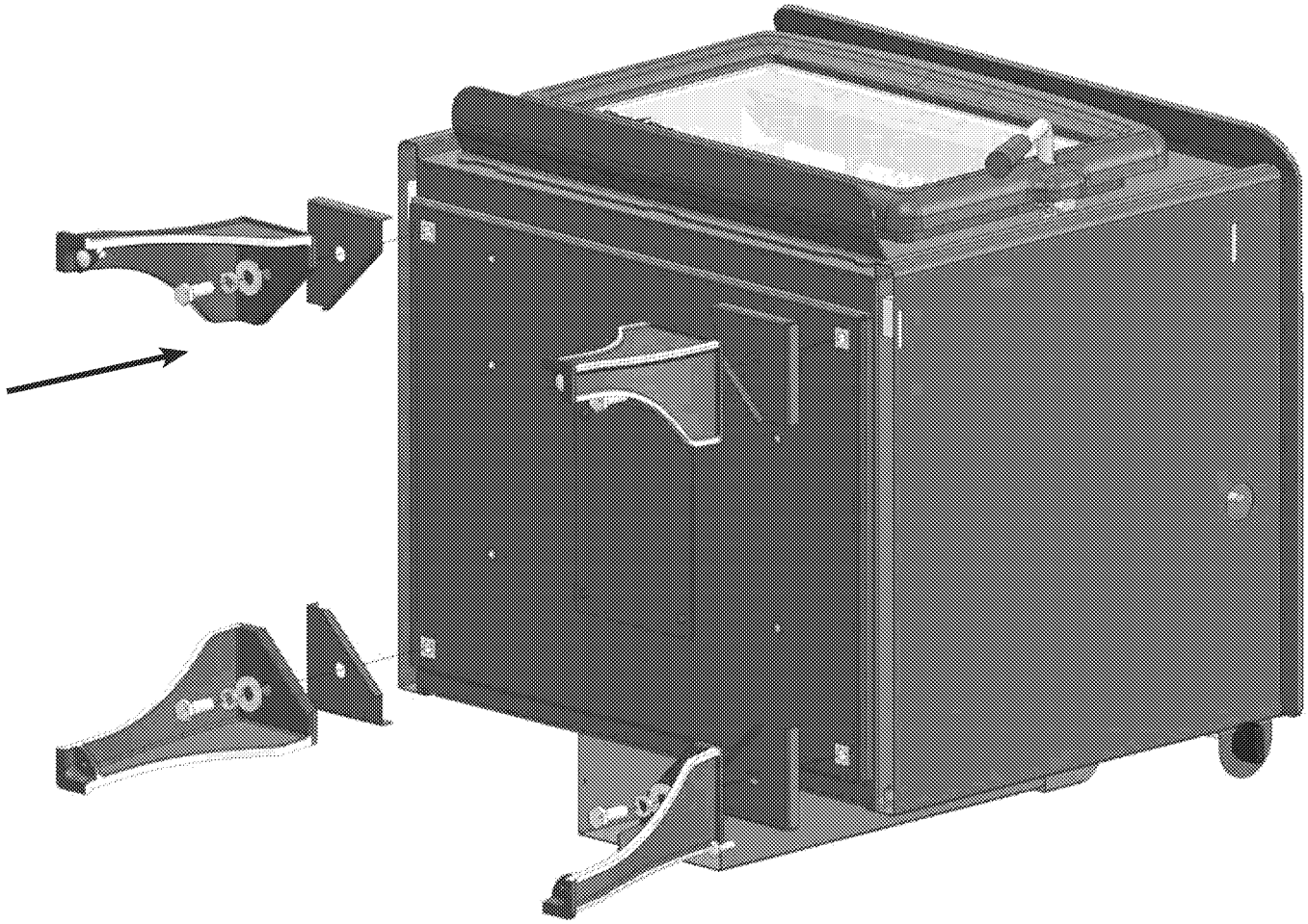

ED_005996_00000492-00217

DOOR INSTALLATION AND CHANGE-OUT (Z2680BK or Z2680SA)
To install the door upon stove installation or to change it out, follow these steps:

WARNING: DOOR IS HEAVY, PLEASE HOLD FIRMLY.

INSTALLATION

1. Align bottom door hinge hole with bottom firebox hinge pin
2. Lower door onto bottom hinge pin, then align top door hinge hole with top firebox hinge pin
3. Lower door onto pins until door hinge surface contacts firebox hinge surface
4. Fit Bypass Handle (packaged with door assembly) onto protruding bypass extension on right side of stove.

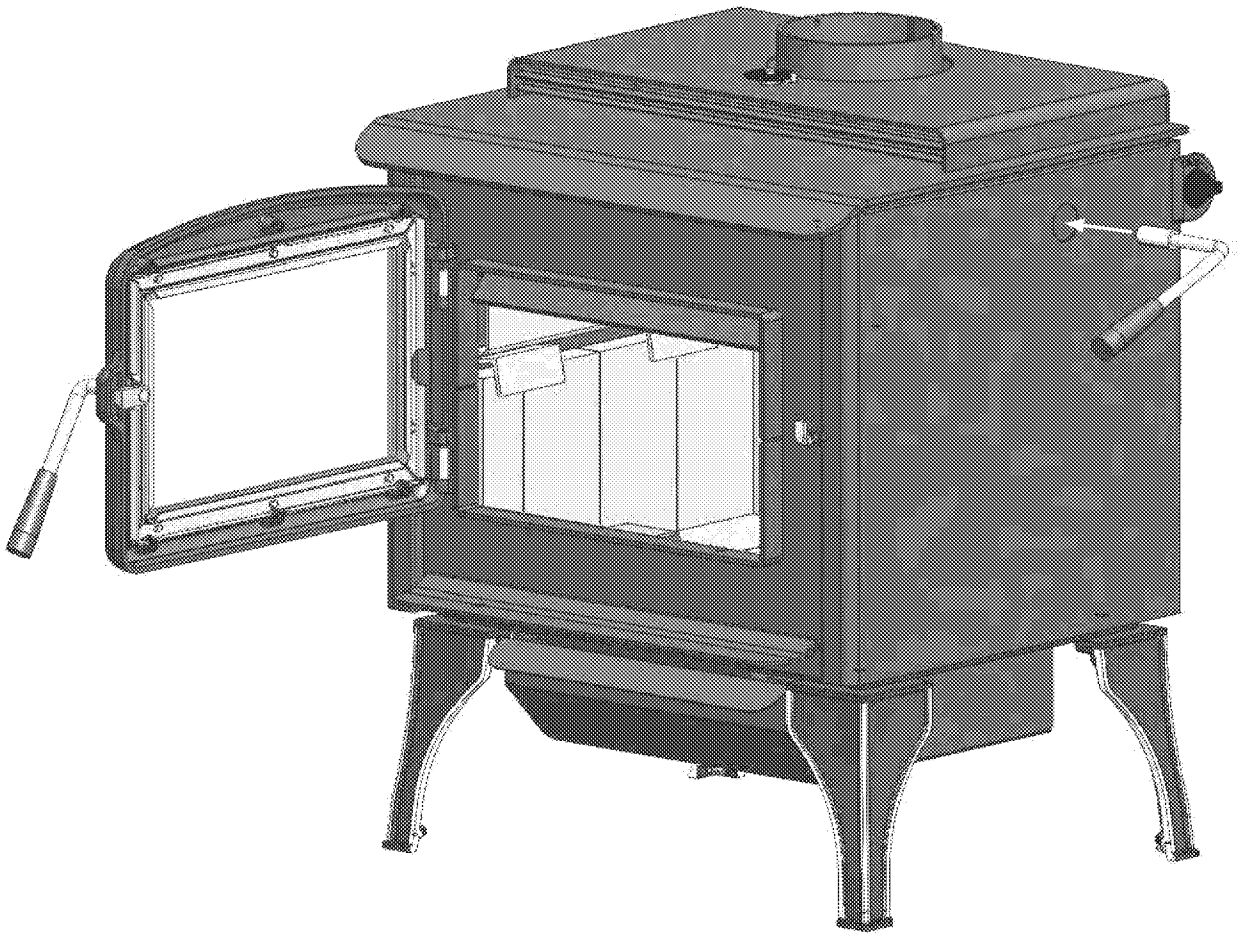

ED_005996_00000492-00218

INTRODUCTION

All Blaze King free standing wood appliances are designed as radiant room space heaters. They have been designed and tested to be installed in insulated habitable rooms areas of your dwelling. The appliance has not been designed to be installed in a concrete uninsulated basement or in a shop/garage environment. Such applications may cause the thermostat to be unresponsive due the constant call for heat resulting in appliance being in a constant or over fire situation. Consequential damage from this type of operation will deem the warranty null and void.

All Blaze King wood appliances are designed to burn cord wood only. Dimensional timber off cuts, very low moisture content small diameter wood and pressed wood logs, when used in excess, may result in excessive internal firebox temperatures that can cause causing irreversible damage to the firebox's internal structure. Excessive temperatures can be caused by many small pieces of very low moisture content wood being used as a primary fuel source. This may be evident by warping or warped internal plates and retainers, possible cracking of the outer firebox and possibly premature failure of the catalytic combustor. All wood appliances should be cleaned out and inspected at the end of every burning season to identify if any internal components have been affected during the burning season. If problems are observed steps must be taken to identify and correct the problem before the subsequent burning season. Failure to do so will result in the warranty of the product being null and void.

YOUR FIRST FIRE!

The following pages contain information on the major components and operation of your heater. Please take time to read about them as it will give you a better understanding of how your appliance works. This understanding will help you to operate your appliance properly thus will extend the life of your appliance and allow you to get the highest efficiencies from your heater.

BYPASS

Your catalytic wood burning appliance has a bypass device to allow the smoke from the fire to temporarily bypass, or go around, the catalytic combustor. The bypass door is located inside the firebox at the top of the stove. The bypass is a steel plate door, hinged inside the stove, and is controlled by the bypass handle on the right side of the stove. When the handle is pointing at you, the bypass is open, when pointing away, it is closed. It is a clockwise rotation from open to closed. **NEVER OPEN THE LOADING DOOR WITHOUT OPENING THE BYPASS DOOR**

Note: To ensure the bypass is closed push down on the bypass handle until you hear a positive click.

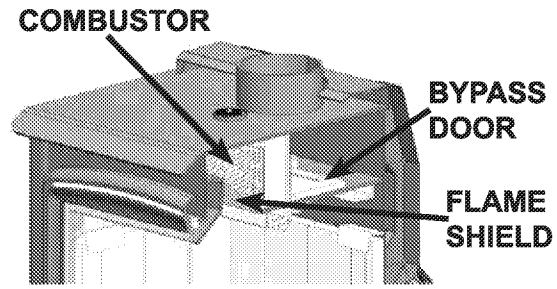

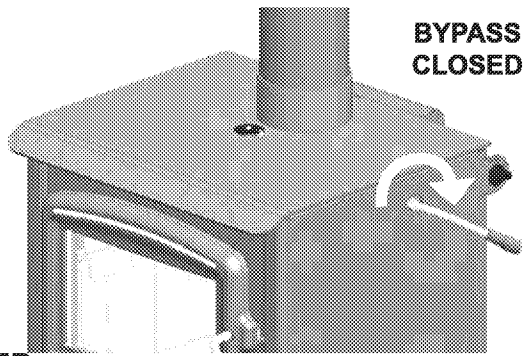

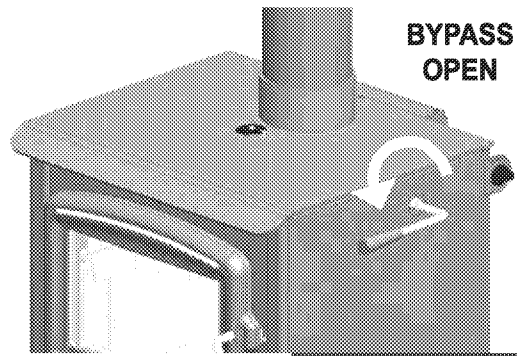

CATALYTIC THERMOMETER

This thermometer is located on the top of the stove. It's purpose is to show you if the combustor is active. Always operate the stove in the "active" zone. When the combustor is not active the stove will emit smoke and will not be efficient. For an accurate reading, turn fans off for approximately 10 minutes and then read the thermometer.

ED_005996_00000492-00219

THERMOSTAT

The thermostat knob is located on the top right rear corner of the stove. It controls the burn rate of the stove. Any thermostat position between **LOW**(thin line) and **HIGH**(wide line) will produce the desired clean burning characteristics. However, since each installation is different, you may find it necessary to operate the thermostat to suit your situation. A **HIGH**(wide line) thermostat setting will produce maximum heat which is more than suitable for heating the average size home. All adjustments to the thermostat should be done gradually. When you first light the stove set the thermostat to **HIGH**(wide line) setting for 20-30 minutes, or until the fire is well established. Once the fire is established turn the thermostat to **MED**(middle of line) for 5 minutes and then to a **LOW**(thin line) setting or the desired setting. Too rapid an adjustment may cause the stove to operate improperly. The most common mistake new owners make is continually adjusting the thermostat.

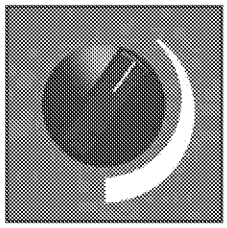

LOW(thin line)

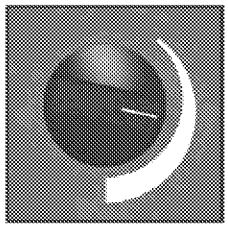

MED(middle of line)

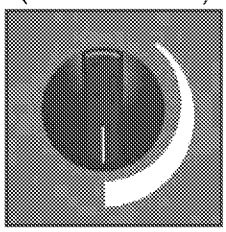

HIGH(wide line)

SELECTING WOOD

⚠WARNING

- **THIS APPLIANCE IS DESIGNED TO BURN NATURAL WOOD ONLY. DO NOT BURN TREATED WOOD, COAL, CHARCOAL, COLORED PAPER, CARDBOARD, SOLVENTS OR GARBAGE.**
- **HIGHER EFFICIENCIES AND LOWER EMISSIONS WILL GENERALLY RESULT WHEN BURNING AIR DRIED SEASONED WOODS, AS COMPARED TO WET, GREEN OR FRESHLY CUT WOODS.**
- **BURNING WET UNSEASONED WOOD CAN CAUSE EXCESSIVE CREOSOTE ACCUMULATION. WHEN IGNITED IT CAN CAUSE A CHIMNEY FIRE THAT MAY RESULT IN A SERIOUS HOUSE FIRE.**

Use dry seasoned wood, split and stacked and protected from rain for at least 24 months with a moisture content of 20% or lower. It takes a great deal of energy to evaporate the moisture contained in green wood and that energy will not be heating your house. Also, green or wet wood will greatly increase creosote problems. The only accurate method to determine moisture content in wood is to use a moisture meter. Never burn salt-water driftwood. It is very corrosive and will damage the firebox. Burning salty wood also voids the warranty.

This controlled combustion firebox has been designed for high efficiency and long burn times.

The proper time to add more wood is when the last charge has been reduced to a glowing charcoal bed and while the catalytic thermometer is still active range. There will be very little smoke at this stage in the burn cycle.

Both hardwood and softwood burn equally well in this appliance but hardwood, which is more dense, will weigh more per cord and burn a little slower and longer. Firewood should be split and stacked in a manner that air can get to all parts of it and covered in early spring to be ready for burning that fall.

The only accurate way to determine wood moisture is to purchase a moisture meter.

⚠WARNING

- **NEVER START A FIRE UNLESS ALL BRICKS ARE CORRECTLY PLACED INSIDE THE FIREBOX. CHECK THE INSTALLATION INSTRUCTIONS CAREFULLY.**
- **ALWAYS OPEN THE BYPASS DOOR BEFORE OPENING THE LOADING DOOR.**
- **ONCE THE LOADING DOOR IS CLOSED, CLOSE THE BYPASS DOOR DIRECTLY AFTER THE CATALYTIC THERMOSTAT NEEDLE IS IN THE ACTIVE ZONE.**

HOW TO USE MOISTURE METERS

1. Take a random selection of around 3-4 logs per cubic yard or cubic meter.
2. Split each log down the middle.
3. In the center of log push pins of meter along grain - three measurements are taken on the freshly split surface: 2" or 5 cm in from each end of the log and in the middle of the split surface with sufficient contact (see figure).
4. Do this to all the logs and take an average of the readings (this will be only an approximate indication but a good guide).

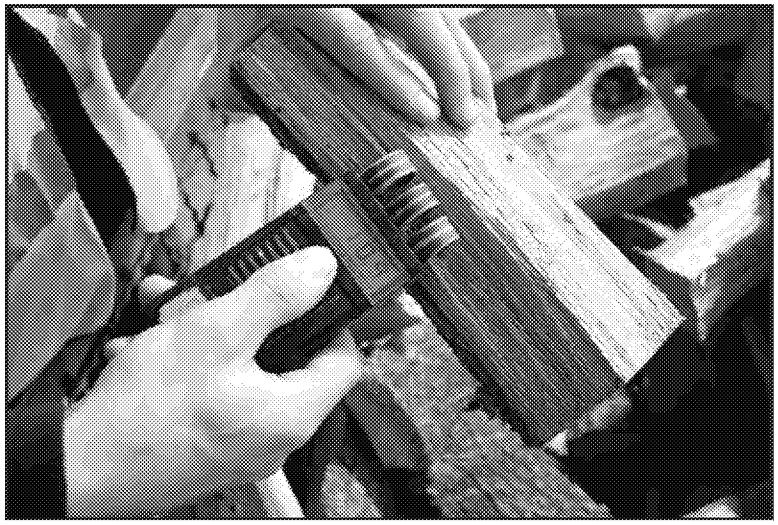

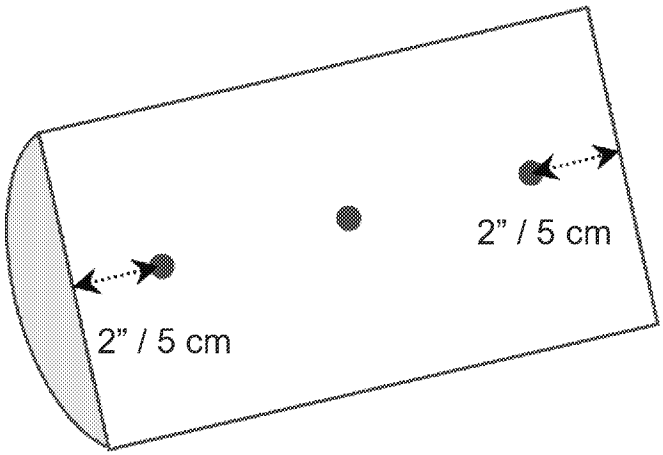

EFFICIENCY

Efficiency was determined using the method outlined in B415.1-10 test method. It is represented by the Higher Heating Value (HHV) as the fuel used during testing contains between 19% - 25% water moisture included in the total calculated fuel weight. (Other test methods such as LHV or Low Heating Value, does not take the water moisture into account).

Annual Fuel Utilization Efficiency (AFUE) attempts to represent the actual, season long, average efficiency of an appliance. HHV is the actual, calculated average efficiency obtained under test conditions. Using correctly seasoned wood is important when trying to gain efficiency. The more seasoned (dry) the wood, the higher the efficiency (less energy wasted on eliminating moisture during combustion). Operating your Blaze King at lower settings will result in higher efficiencies as the fuel will undergo a more complete combustion. For maximum efficiency, the appliance should be installed in a location that provides adequate intake/combustion air as well as a location that will allow for the straightest run of optimal chimney length to establish necessary draft .

ED_005996_00000492-00221

LIGHTING THE FIRE

NOTE: As you heat up the stove for the first time, the paint will go through a curing process and will give off an odor. To minimize the inconvenience, burn the stove at a low temperature setting for several hours. It is advisable to open a door or window until the odor dissipates. You may also notice a change in color as the paint cures, this is normal and will appear uniform after subsequent firings.

1. **DO NOT USE A GRATE. BUILD THE FIRE DIRECTLY ON THE BRICK IN THE BOTTOM OF THE STOVE.**
2. Set the thermostat to **HIGH** (maximum) position and turn the fan(if fitted) **OFF**.
3. Open both the loading door and the bypass door (rotate the bypass handle forward).
4. Place 10 balls of non-glossy paper towards the front of the bottom of the firebox, or use a Blaze King fire starter puck, then stack 20 pieces of kindling on top of the paper in a crisscross fashion (leaving air gaps in between sticks).
5. Light the fire and allow it to get a good start while leaving the loading door cracked open (approximately 3 to 5 minutes). **DO NOT LEAVE THE STOVE UNATTENDED.**
6. Once the kindling is fully on fire, place two or three medium size logs onto the fire. Keeping the loading door unlatched, allow the logs to catch fire (approximately 5 minutes). **DO NOT LEAVE THE STOVE UNATTENDED.**
7. Once the logs are burning, latch the loading door shut **BUT** keep the bypass door open. Leaving the loading door open after the fire is well started may cause premature failure of the catalytic combustor.
8. When nearly all of the wood in the firebox is fully burning, finish loading the stove. Lay the wood as far back in the stove as possible. Latch the loading door shut and observe the catalytic thermometer. Once the needle is in the **ACTIVE ZONE**, close the bypass door (rotate the bypass handle backwards). Turning the thermostat down to soon may cause the fire to go out.
9. Let the fire burn, with the thermostat in a **HIGH** setting, for 20-30 minutes, or until the fire is well established. At that point, turn the thermostat down to the desired setting. It is good burning practice to burn the stove on **HIGH** for 20 to 30 minutes after every refuelling, this will help to condition the wood load for optimum combustion. The temperature in the stove and the gases entering the combustor must be raised to at least 500°(indicated by the thermometer needle in the **ACTIVE ZONE**) for catalytic activity to be initiated. During the start-up of a cold stove, a high fire must be maintained for at least 20-30 minutes. This ensures that the stove, catalyst, and fuel are all stabilized at proper operating temperatures. Even though it is possible for flue gas temperatures to reach 600° within 5 minutes of a fire being started. If the fire is allowed to die down immediately (thermostat set to a **LOW** setting too soon), it may go out or the combustor may stop working, indicated by the thermometer needle being in the **INACTIVE ZONE**. Once the combustor starts working, heat generated in it, by burning the exhaust smoke, will keep it working.
10. The fan (if fitted) can be turned on when the stove is hot or after the initial warm up period of 20-30 minutes.

Probably the least understood requirement in maintaining a good fire is that of establishing a good base of coals or embers. A good bed of hot coals or embers will maintain a more even temperature as well as getting the new load of wood started easily. Put as much wood into the stove as needed, practice will teach the amount of wood necessary to keep the fire going until the next reloading time. Don't be afraid to fill it completely if necessary. With the Blaze King automatic thermostat, the wood will only burn at the rate set on the thermostat. Once the full load is established, the stove should be left to complete the full burn cycle. This is evident by either a coal bed (ember bed) remaining or the catalyst's thermometer hovers just inside the active zone. This procedure will maximize the efficiency of the combustor as well as limit chimney emissions and smoke spillage.

⚠WARNING

DO NOT USE THE APPLIANCE WITHOUT A COMBUSTOR

RELOADING PROCEDURE (with the catalyst temperature in the ACTIVE ZONE)

1. Have your next load of wood ready before beginning. Turn the thermostat to **HIGH** and the fan(if fitted) **OFF**. Wait 2 minutes for the air flow to stabilize.
2. Open the bypass door (rotate the bypass lever forward, on Princess Insert pull handle up) and again wait 2 minutes for the air flow to stabilize.
3. Unlatch the loading door and open just a crack to allow the ambient room air to be introduced to the firebox, this may take a few seconds to stabilize.
4. Slowly open the loading door and proceed to reload the firebox. If you experience excessive smoke spillage, slightly close the loading door to re-establish a draft through the chimney.
5. Once loaded, latch the loading door shut and close the bypass door (rotate the bypass handle backwards, on Princes Insert push handle down). Let the fire burn on the **HIGH** thermostat setting for 20 to 30 minutes **OR** until the fire is very well established. At that point, turn the thermostat down to the desired setting. Keep in mind you may not see a large amount of flame activity in the lower thermostat setting. The thermometer needle will remain in the active zone indicating that the burn cycle is continuing.
6. Should you burn the stove on a very low setting for extended periods of time, you will begin to see creosote deposits forming on the glass door. To remove these deposits, simple run the stove on **HIGH** for approximately 30 minutes. The **HIGH** setting will burn off most of the deposits

As every pile of wood is different you will learn, over time, which settings are necessary to achieve the optimal fire. This will be based on the type of wood, installation, weather conditions and the desired room temperature.

RELOADING PROCEDURE (with the catalyst temperature still in the INACTIVE ZONE)

Follow the procedure for "LIGHTING THE FIRE" on the previous page.

OPTIMAL THERMOSTAT SETTING

Any thermostat position between **LOW** and **HIGH** will produce the desired clean burning characteristics. However, since each application can vary, you may find it necessary to operate the thermostat to suit your application. A thermostat setting on **HIGH** will produce a maximum heat which is more than suitable for heating the average size home and offer the cleanest door glass.

1. Starting the fire. Each stove, home, installation, chimney installation, and homeowner combination works a little differently. The first several times you fuel the stove, it may not react as you expect. A little experimentation may be needed to find the right combination of fuel and thermostat setting to achieve the maximum efficiency. This is one of the joys of burning wood. You, the wood burner, make it work. And you can see what happens as it is working. Be patient, the air / fuel mixture and temperature must be stabilized before maximum combustion efficiency can be achieved.
2. As the combustor temperature (as indicated by the thermometer on top of the stove) passes into the active zone, further adjustment to achieve the desired room temperature should be made in small increments for the most effective cleaner burning operation. Changes should be made as few times each day as possible. When the thermostat knob is moved from high to low, more gases are produced, so the combustor has more fuel; consequently the combustor thermometer may register a higher heat for several hours after the thermostat is turned down.
3. Keep hot coals active so when you reload the stove you will reduce the time necessary to maintain an active combustor.
4. The thermostat is set at the factory. **DO NOT TAMPER WITH THE THERMOSTAT**, this will result in a malfunctioning thermostat.

ED_005996_00000492-00223

FAN OPERATION
The fan(if fitted) should be off until the stove reaches normal operating temperatures. After approximately 30 minutes, the fan speed adjustment should match the thermostat control setting, i.e. if your stove is set at medium then your fan should also be set at medium, low—low, high—high etc.. We recommend the use of an optional fan system on all our wood stoves. The fan system recirculates the room air over the hot surfaces of your stove and helps spread this super heated air around your home.

ICE - FORMATION AND PREVENTION
Most of what you see coming from the chimney of a properly operating catalytic appliance is water vapor. In extremely cold weather - and with some exterior chimneys - this vapor may freeze in the chimney to the point of actually blocking the chimney and extinguishing the fire. In such weather, occasionally burn the appliance for 4 or 5 minutes with the thermostat setting on **HIGH** to melt any possible ice buildup.

WOOD BURNING IN THE SHOULDER SEASON
There are things to consider if you decide to light a fire in the spring and fall or when the outside temperature is milder, perhaps 55°F to 70°F (13°C to 21°C).

As you light the fire, with the loading door open, you may notice spillage, this is when a small amount of smoke comes back into the living space. When your fire begins to warm the chimney and the draft improves, spillage is greatly reduced. After a short period of time you can adjust the thermostat to a **LOW** setting and maintain a comfortable temperature in your home.

In reducing the thermostat setting you have also reduced the flue temperatures and your chimney begins to cool down. At this time the amount of draft is also decreasing and spillage may occur. The differences between the flue temperature and the outdoor air temperatures causes your chimney to draw and vent the flue gasses to the outside. This air movement, sometimes referred to as Stack Effect, is also influenced by air density and moisture differences. Small temperature differences produce less draw in your chimney system than large temperature differences.

General Rules for burning in the shoulder season:

- Run your appliance on high for 30 minutes after start up and reloading.
- Slowly turn the thermostat down to the desired heat setting.
- The heat setting needs to be high enough to keep the thermometer in the active zone.
- If the thermometer does not stay in the active zone turn the thermostat to a higher setting. Wait 15 minutes then confirm that the thermometer remains in the active zone. Repeat as needed.
- If your appliance is producing too much heat, build smaller hotter fires.
- Build smaller hotter fires on milder days in the spring and fall.

CATALYST MONITORING

It is important to periodically monitor the operation of the catalytic combustor to ensure that it is functioning properly. A non-functioning combustor will result in a loss of heating efficiency, and an increase in creosote and emissions. Following is a list of items that should be checked on a periodic basis:

- Combustors should be visually inspected at least three times during the heating season to determine if physical degradation has occurred. Actual removal of the combustor is not recommended unless more detailed inspection is warranted because of decreased performance. Refer to "CATALYTIC COMBUSTOR TROUBLESHOOTING" on next page.
- This catalytic heater is equipped with a temperature probe to monitor catalyst operation. Properly functioning combustors typically maintain temperatures in excess of 500°F (indicated by the thermometer needle in the active zone), and often reach temperatures in excess of 1000°F. If catalyst temperatures fall below 500°F (indicated by the thermometer needle in the inactive zone), refer to next step and to "CATALYTIC COMBUSTOR, TESTING" below.
- You can get an indication of whether the catalyst is working by comparing the amount of smoke leaving the chimney when the smoke is going through the combustor and catalyst light-off has been achieved, to the amount of smoke leaving the chimney when smoke is not routed through the combustor (bypass mode):
  - Light the appliance as per the lighting instructions (see "LIGHTING THE FIRE"). With smoke routed through the catalyst, go outside and observe the emissions leaving the chimney.
  - Open the bypass mechanism, wait approximately 15 minutes, and again observe the emissions leaving the chimney. Significantly more smoke will be seen when the exhaust is not routed through the combustor (bypass mode). Some smoke may be visible shortly after you start the fire and shortly after reloading the fire. Allow 20 to 30 minutes for the fire to stabilize before making observations.

CATALYTIC COMBUSTOR, TESTING

Light the fire as per the lighting instructions (see "LIGHTING THE FIRE"). Then set the thermostat knob on a MED setting. When the fire is well established (within one to three hours) turn the thermostat knob between **LOW** and **MED**. A properly operating combustor will remain active, and the combustor thermometer will remain in the "active" zone until the wood load is mostly consumed. A "tired" or "dead" combustor will, with the thermostat on **MED** or lower, go out completely, and the thermometer needle will fall into the "inactive" zone. Repeat this procedure several times over several days (Remember that the combustor thermometer has a built-in lag of 4-8 minutes.) If, after several test burns, the thermometer will not indicate an "active" combustor, it may require cleaning or replacement. It is also possible that the thermometer, itself, may not be reading accurately. Before condemning the combustor, read "THERMOMETER". If, after cleaning has been performed, your combustor is still not working you can Contact Blaze King for a replacement combustor. Please read "REPLACEMENT PARTS" section in this owners' manual.

CATALYTIC COMBUSTOR, CLEANING

Under certain conditions, ash particles may become attached to the face of the combustor. These may be seen while the combustor is in the glowing stage, or when the fire is out. Any deposit on the visible face of the combustor should be removed. Wait until the fire is out and the appliance is cold before performing any cleaning. Brushing the combustor with a soft bristle paint brush will remove some deposits. Passing a vacuum cleaner wand or brush near the face of the combustor will remove most deposits. (Hot ash in a vacuum cleaner bag will burn, may melt the vacuum or cause a house fire. Exercise caution and never clean the appliance when the appliance or ashes are hot.) Never scrape the combustor with any hard tool or brush. Never run pipe cleaner through the individual cells of the combustor. This is not needed, and may do more harm than good. Limit cleaning to the face of the combustor. **NOTE: Never remove a combustor without approved combustor gasket in hand as original gasket will fall apart when removed from** appliance. Remember to re-install the Flame Shield (the perforated plate) in same position it was found.
TIP: A hot fire will usually prove to be the best method of cleaning the combustor of deposits.

ED_005996_00000492-00225

CATALYTIC COMBUSTOR, TROUBLESHOOTING

PROBLEM - CREOSOTE PLUGGING

Possible Cause: Burning materials that produce a lot of char and fly-ash.
Solution: Do not burn materials such as garbage, gift wrap, or cardboard.

Possible Cause: Burning wet, pitchy woods or burning large loads of small diameter wood with the combustor in the operating position without the thermostat needle in the active zone.
Solution: Burn dry, seasoned wood, don't engage the bypass until the temperatures are high enough to initiate light-off (indicated by the thermostat needle in the active zone).

Possible Cause: Combustor not functioning. If proper burning procedures have been followed to no avail, the combustor is not functioning.
Solution: Replace the combustor with a genuine Blaze King combustor (failure to do so will void your warranty).

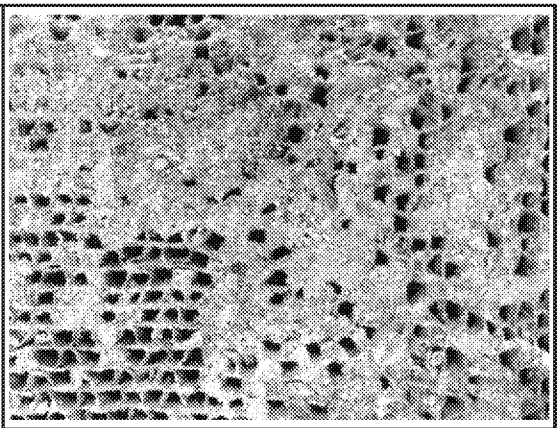

PROBLEM - CATALYST PEELING

Possible Cause: Extreme temperatures (above 1800°F, or 1000°C.) at combustor surface can cause the catalysts to peel. Over firing and flame impingement on the combustor are primary causes. Minor peeling photo shows minor peeling that is normal and does not affect function. Severe peeling photo shows that are closed or plugged.
Solution: Avoid extreme temperatures and flame impingement. If peeling is severe, remove and replace combustor.

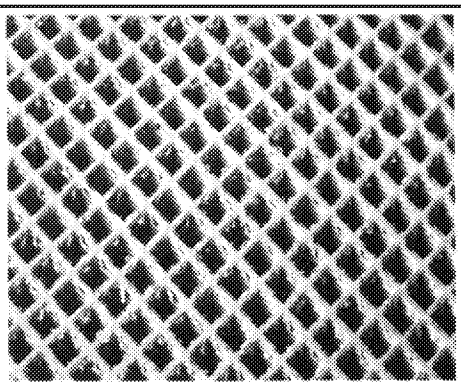

Minor Peeling

PROBLEM - CATALYST DEACTIVATION

Possible Cause: Burning large quantities of trash, pressure-treated lumber, or painted woods.
Solution: Burn quality woods available in your area. If you decide the catalyst has been deactivated, replace combustor with a genuine Blaze King combustor (failure to do so will void your warranty).

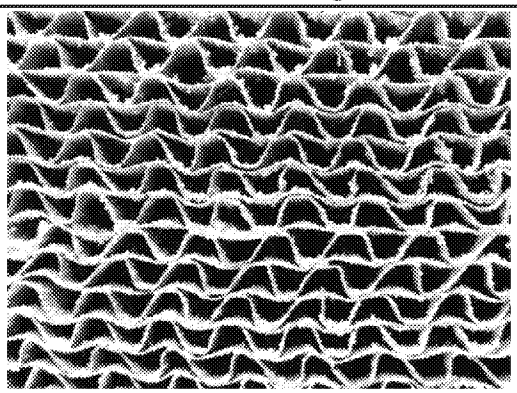

Severe Peeling

ED_005996_00000492-00226

CATALYST MONITORING

PROBLEM - CATALYST MASKING
(The catalyst is coated with a layer of fly-ash or soot which prevents catalytic activity)

Possible Cause: Accumulation of fly-ash
Solution: Brush cooled combustor with a soft-bristled brush or vacuum lightly at least once per burning season.

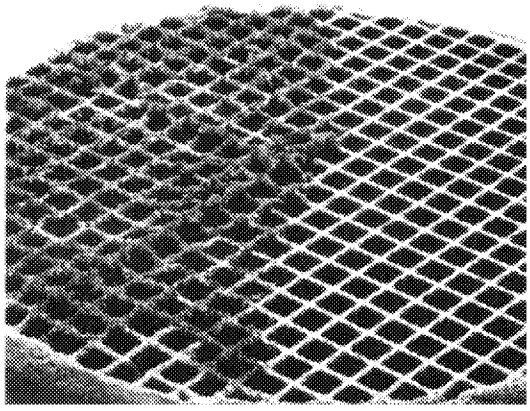

PROBLEM - THERMAL CRACKING

Possible Cause: Normal operation, as long as the combustor remains intact.
Solution: If cracking causes large pieces to fall out, replace the combustor.

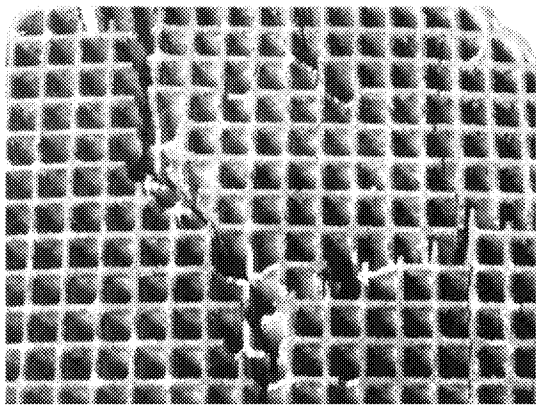

PROBLEM - MECHANICAL CRACKING
Possible Cause: Mishandling, abuse, or operating without a properly gasket sealed combustor.
Solution: Handle with care

Possible Cause: Distortion of holding collar.
Solution: Combustor should be held firmly in its can. It should slide easily into and out of the holding collar of the stove. If severe cracking has resulted in loss of large chunks of combustor, replace combustor. Also replace any warped stove parts.

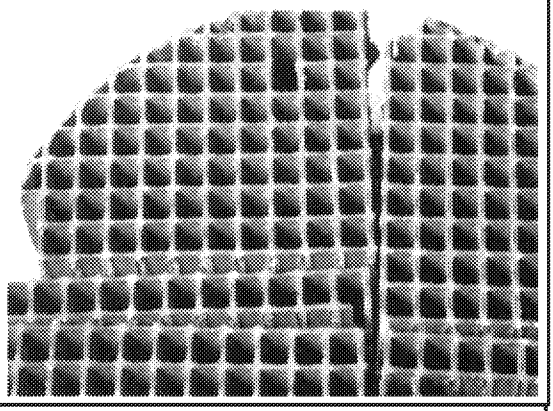

PROBLEM - CRUMBLING

Possible Cause: Air leaks
Solution: Inspect door gasket, see "MAINTENANCE cont." on page 38.

Possible Cause: High draft
Solution: Do not exceed .06" of water draft.

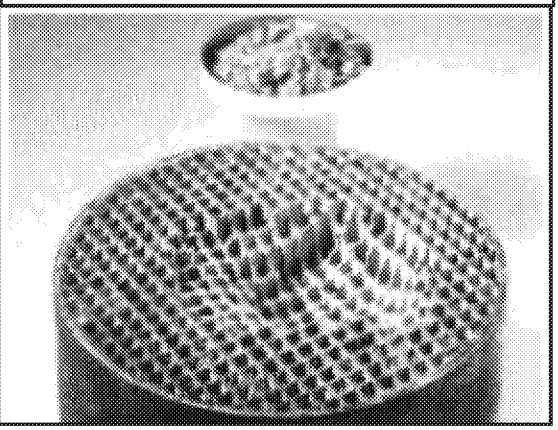

CATALYTIC COMBUSTOR, REPLACEMENT
BLAZE KING RECOMMENDS YOUR DEALER PERFORM THIS TASK

The catalytic thermometer on top of the stove should read in the active zone after the stove has been in operation for several hours. If the thermometer's indicator needle does not stay in the active zone, even with a hot fire, over a 7-10 day period of regular use, the combustor may need replacement or cleaning, see "CATALYST MONITORING". If the combustor needs replacing then discontinue use of the appliance until the combustor is replaced. If the combustor must be examined or replaced contact your Blaze King dealer.

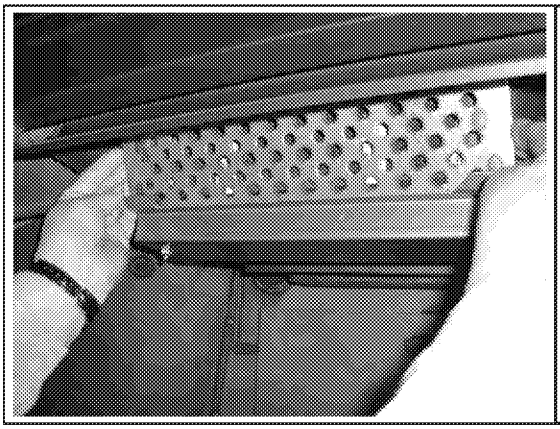

1. The removal of a Blaze King Catalytic combustor requires a small flat blade screwdriver or pocket knife. The stove fire must be out for at least 12 hours prior to the removal process. A combustor can reach 1400°F and hold high temperatures for several hours even after the fire is out. After waiting 12 hours, first remove the flame shield by simply lifting the shield off the two tabs at either side. Pay particular attention to orientation as there is a top and bottom edge to the flame shield.

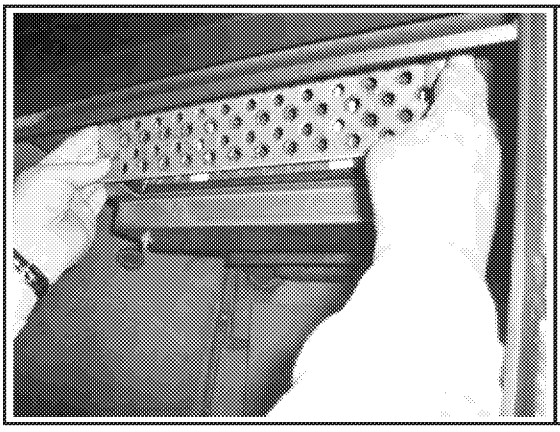

2. Once you remove the flame shield, you'll find the combustor. The honeycomb combustor can be made of different materials such as cordierite, mulite or even stainless steel. They are all the same with regard to removal and caution should be taken so as to not drop or damage the combustor. If your combustor has never been cleaned according the manufacturers directions, you may wish to clean the combustor before replacing it with a new combustor, see "CATALYTIC COMBUSTOR CLEANING".

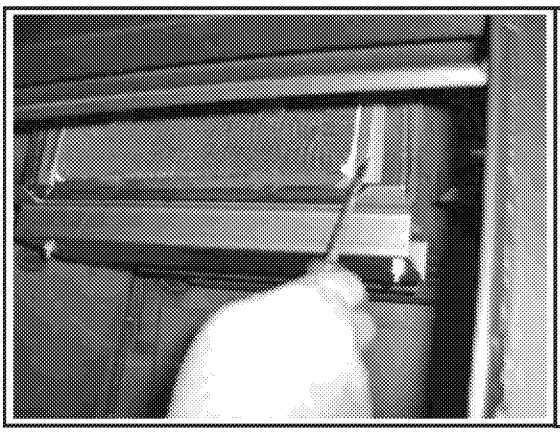

3. The combustor has a metal tab across the bottom and on each side of the combustor. Using a flat blade screwdriver or pocket knife blade, slide the blade behind the metal tab and the heavy steel dome of the stove. The dome is the housing that surrounds the combustor. Apply slight pressure until the combustor begins to move forward, about 1/4". Repeat the process on the opposite end tab. By working back and forth the combustor will work free of the dome housing. It is normal for the gasket surrounding the metal band to fall apart during this process. New combustors are shipped with a new gasket.

ED_005996_00000492-00228

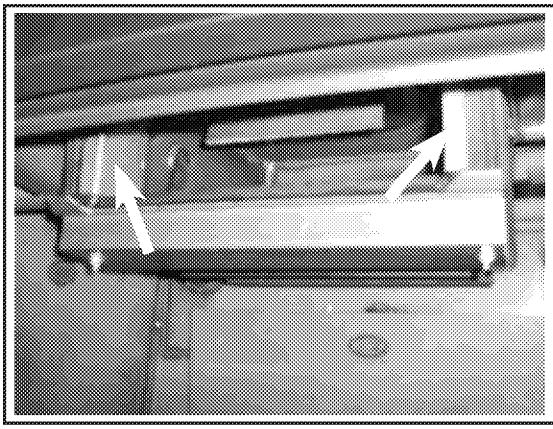

4. Now that the combustor has been removed you'll be able to see one stainless bypass retainer on each side. These can remain in place and do not need to be removed. These clips are not fixed in position and can fall into the firebox. Make sure they are in position before replacing the combustor. Using the same screwdriver or pocket knife, scrape any old gasket from the surface areas of the dome. The dome is the housing that surrounds the combustor. If you clean your existing combustor, you'll need to order replacement combustor gasket. It is always a good idea to have a spare combustor gasket on hand prior to performing any maintenance. If you purchase a new combustor a new gasket will already be applied to the combustor.

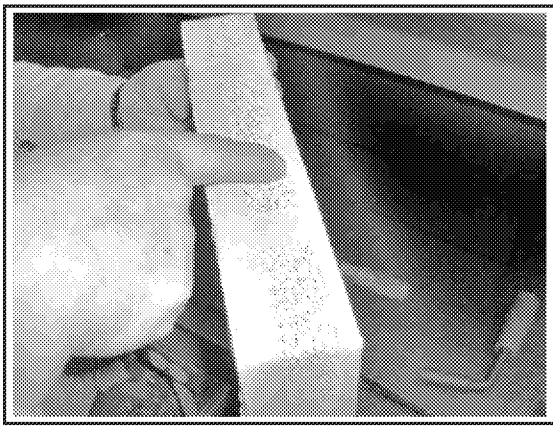

5. This new combustor already has the gasket installed. Note the 1" wide masking tape. This tape will help to keep the leading edge of the gasket from snagging during installation. If you've cleaned your combustor, wrap the combustor gasket as you see here and use the 1" masking tape around the perimeter front and rear. During the first fire the masking tape will burn off and the combustor gasket will swell providing a tight seal. It is this tight seal that improves efficiency and performance. You should never burn your stove without a combustor gasket installed.

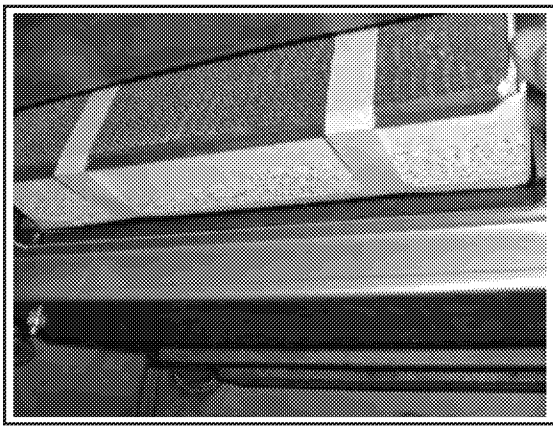

6. Since the combustor is only 2" deep, there is ample room to lift the new combustor into place. **REMEMBER TO HAVE THE TAB ACROSS THE BOTTOM EDGE OF THE COMBUSTOR AS IT IS INSTALLED**. Slowly push the combustor in at the top apply even pressure to the left and right corners. This will allow for a better view of the bottom edge for the final fitting. **DO NOT FORCE THE COMBUSTOR INTO THE DOME. TAKE YOUR TIME AND WORK IT INTO PLACE SLOWLY.**

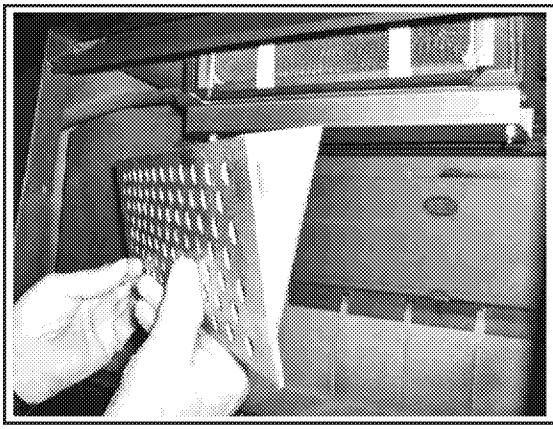

7. Once the combustor is installed completely so that all three tabs at touching the face of the dome, replace the flame shield. Note the brackets welded to the back flame shield are shaped like a triangle.The point of the triangle should face down when installed correctly. Never operate your stove without the flame shield in place. The flame shield will protect the face of the combustor against damages from wood when loading and other possible damages that can occur during the cleaning process.

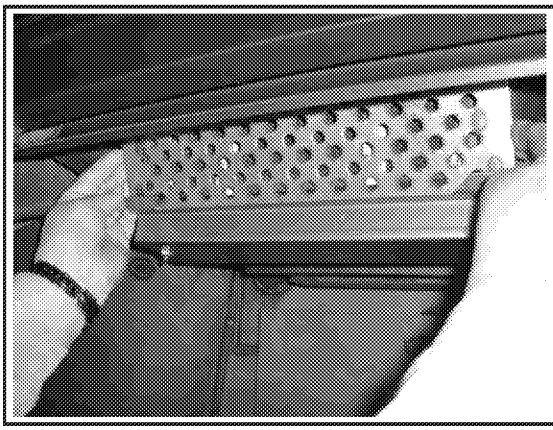

8. The flame shield will rest on the two tabs located on the dome guard and lean slightly forward. Now that your combustor has been installed you can relight your stove. You will continue to receive excellent efficiency and clean burning for years to come. A few reminders, never burn anything other than dry, seasoned cordwood. Burning anything else may contaminate or ruin your new combustor. Also remember to keep your front loading door gasket seal properly adjusted, see “LOADING DOOR TENSION ADJUSTMENT”. Doing so will improve burn times and extend combustor life span.

The combustor supplied with this heater is either a Z0336A-M or Z0334 metal combustor. Consult the catalytic combustor warranty also supplied with this wood heater. Warranty claims should be addressed to:

in Canada	in USA
Blaze King Industries / Valley Comfort Systems Warranty Department, 1290 Commercial Way Penticton, BC Canada V2A 3H5, Ph: 250-493-7444	Blaze King Industries Warranty Department, 146A Street Walla, Walla, Washington 99362, Ph: 509-522-2730

ED_005996_00000492-00230

RUN-AWAY OR CHIMNEY FIRE

⚠WARNING

A CHIMNEY FIRE CAN PERMANENTLY DAMAGE YOUR CHIMNEY SYSTEM. THIS DAMAGE CAN ONLY BE REPAIRED BY REPLACING THE DAMAGED COMPONENT PARTS. CHIMNEY FIRE DAMAGE IS NOT COVERED BY THE LIMITED WARRANTY.

CAUSES:

1. Using incorrect fuel, or small fuel pieces which would normally be used as kindling.
2. Leaving the door ajar too long and creating extreme temperatures as the air rushes in the open door.
3. Improperly installed or worn gaskets.
4. Creosote build up in the chimney.

SOLUTIONS:

1. Do not burn treated or processed wood, coal, charcoal, colored paper or cardboard.
2. Be careful not to over fire the appliance by leaving the door open too long after the initial start-up.
3. Replace worn, dried out (inflexible) gaskets.
4. Have your chimney cleaned regularly.

WHAT TO DO IF A RUN-AWAY OR CHIMNEY FIRE STARTS:

1. Close the draft fully (lowest position) by shutting off thermostat, and make sure firebox is closed tightly.
2. Call the local fire department.
3. Examine the chimney, attic and roof of the house, to see if any part has become hot enough to catch fire. If necessary spray with a fire extinguisher or water from a garden hose.
4. Do not operate the appliance again until you are certain the chimney has not been damaged.

CREOSOTE FORMATION AND REMOVAL

When wood is burned slowly, it produces tar and other organic vapors which combine with expelled moisture to form creosote. These vapors condense in the relatively cooler chimney flue of a slow burning fire and when ignited, make an extremely hot fire. Check your chimney for creosote and soot regularly, until a safe frequency for cleaning is established. The chimney connector and chimney should be inspected regularly during the heating season to determine if a creosote build up has occurred. Be aware that the hotter the fire, the less creosote is deposited.

If accumulation is excessive, clean the chimney. You may want to call a professional chimney sweep to clean it. Both the chimney and the appliance have to be cleaned at least once a year or as often as necessary. Have a clearly understood plan to handle a chimney fire.

CHIMNEY MAINTENANCE

The most efficient method to sweep the chimney is using a hard brush. Brush downwards so soot and creosote residues will come off the inner surface and fall to the bottom of the chimney where they can be removed easily.
The chimney must be checked regularly and if creosote has accumulated, it must be removed without delay. Cleaning on a regular basis should be sufficient during the coldest months. **ENSURE THE BYPASS DOOR IS OPEN PRIOR TO CLEANING THE CHIMNEY SO THE SOOT AND CREOSOTE FALLS INTO THE FIREBOX.**
Chimney / Flue Inspection:

1. The chimney should be inspected regularly during the heating season.
2. If possible, the chimney should be dismantled and cleaned.
3. The chimney should be inspected for possible damage.
4. If it is in good condition, put the chimney back in place; otherwise, it must be replaced.

FIRE EXTINGUISHERS AND SMOKE DETECTORS
All homes with a solid fuel burning appliance should have at least one fire extinguisher in a central location, known to all, and at least one smoke detector in the room containing the appliance. If it sounds an alarm, correct the cause but do not de-activate or relocate the smoke detector.

ASH REMOVAL
This appliance is required to be cleaned frequently because soot, creosote and ash may accumulate. Wait until the appliance is fully cooled off before the removal of ashes. **ALWAYS REMOVE THE ASH BUCKET IMMEDIATELY AFTER FILLING**. Ashes should be removed any time they come within one inch of the door opening. It is not necessary or advisable to completely remove all of the ashes when cleaning this appliance. Wood burns best in a bed of ashes 1/2" thick. Ashes should be placed in a metal container with a tight fitting lid. The closed container of ashes should be placed on a noncombustible floor or on the ground (outside), well away from all combustible materials, pending final disposal. If the ashes are disposed of by burial in soil or otherwise locally dispersed, they should be retained in the closed container until all cinders have thoroughly cooled. Other waste shall not be placed in this container.

⚠WARNING

NEVER STORE HOT ASHES IN A GARAGE OR BASEMENT. HOT ASHES WILL GENERATE CARBON MONOXIDE AND / OR FLAMMABLE GASES. THESE GASES MAY CAUSE SUFFOCATION AND POSSIBLE DEATH.

LOADING DOOR GASKET INSPECTION

Inspect the door gasket for physical deterioration, missing sections or obvious leakage. The appliance front should make a groove in the gasket material - one side of the groove (toward the inside) will often be dark or black, and the other side (toward the outside) should be light or white. Dark smudges on the outside of the groove may indicate an air leak. If the groove is very shallow or missing, or if there is a heavy ash or creosote deposit along the bottom edge of the gasket, it may need to be replaced. Frayed or broken gasket material, or a gasket that is hard and unyielding, will also indicate need for replacement. Any time a piece of gasket is missing or is broken anywhere, the entire gasket must be replaced.

To check the gasket further, wait until the appliance is cooled and insert a piece of paper (a dollar bill will work) into the door opening and close and latch the door. Obvious resistance should be felt when pulling the paper out Repeat this check several times around the perimeter of the door.

LOADING DOOR GASKET REPLACEMENT

BLAZE KING RECOMMENDS YOUR DEALER PERFORM THIS TASK

1. If the door gasket is to be replaced, be sure you have Blaze King 7/8" fiber glass gasket ready to re-install, as well as high temperature adhesive. See your Blaze King dealer.
2. Be sure the fire is out and the stove has cooled down. The door should be removed by lifting up and out, off of the hinge pins. Then lay the door flat.
3. With a pair of pliers, pull the old door gasket out of the channel and dispose of it.
4. Thoroughly clean out the channel so the new silicone adhesive will adhere and the gasket will fit smoothly.
5. Dry fit the new gasket first to ensure proper fit. Do not stretch or cut the gasket. Distribute the gasket evenly around the frame.
6. Run a small bead of a high temperature silicone adhesive along the center of the channel. **DO NOT USE HOUSEHOLD SILICONE CAULKING**. High temperature silicone may be obtained from wood stove dealer.
7. Start the new gasket in the lower right corner. Do not stretch or cut the gasket. Distribute the gasket evenly around the frame.
8. Allow the adhesive to dry before closing the loading door. The loading door tension may need to be adjusted, see "LOADING DOOR TENSION ADJUSTMENT".
9. Check the fit of the door gasket. Insert a narrow strip of paper into the door opening and close and latch the door. Obvious resistance should be felt when pulling the paper out. Repeat this check several times around the perimeter of the door. If no resistance is felt, adjust door latch catch, see "LOADING DOOR TENSION ADJUSTMENT".
10. A tight sealing door extends the burn times & protects the combustor.

BYPASS DOOR GASKET REPLACEMENT
BLAZE KING RECOMMENDS YOUR DEALER PERFORM THIS TASK

1. You will require THERMOSEAL® 1000SF high-temperature resistant cement and Blaze King 5/8" dense fiber glass gasket. See your Blaze King dealer. You will also require masking tape and combustor gasket as disassembly of the combustor will result in a damaged combustor gasket.
2. Be sure the fire is out and the stove has cooled down.
3. You will need to remove the liner from the collar of the stove, and have the ability to see straight down into the stove box through the collar.
4. Please follow steps on "CATALYTIC COMBUSTOR, REPLACEMENT" on how to remove your combustor.
5. To remove the bypass door, move the bypass rod out of the way using the bypass handle on the side of the stove. Looking down through the collar, lift one end of the bypass door for clearance to turn inside the top assembly. Once the bypass plate is in this position, remove the plate through the combustor opening.

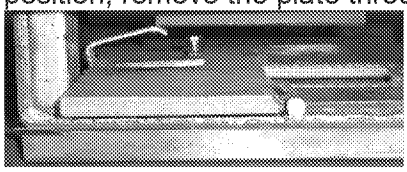

BYPASS DOOR REMOVAL THROUGH COMBUSTOR OPENING

6. Remove the old gasket and apply the THERMOSEAL® 1000SF high-temperature resistant cement along the door opening edge.
7. Place the gasket along the cement, and tap it in to seat it securely in the channel.
8. Reverse method of removing bypass door to put it back in place.
9. Prior to reconnecting the liner, you will need to adjust the bypass ramp bolt. You must first loosen the retaining nut located under the head of the adjustment bolt. Then using a 7/16" box wrench, tighten the bolt until the bypass handle, when closed, has a slight cam-over feel. Do not over tighten.
10. Secure bolt adjustment by tightening the 7/16" nut against the ramp as seen in the photo to the left. Now work the bypass handle several times to make certain the bypass operation is smooth and working properly. When you are satisfied with the operation of the bypass, please lower the venting.
    Important: Apply high temp anti-seize lubricant to the under side of the bypass ramp where the rod contacts.
11. Please follow steps 5-8 in "CATALYST MONITORING" to return the combustor into place. Please note that if the gasket of the combustor is damaged, it will have to be replaced.

VIEW OF BYPASS DOOR AND CRANK THROUGH COLLAR

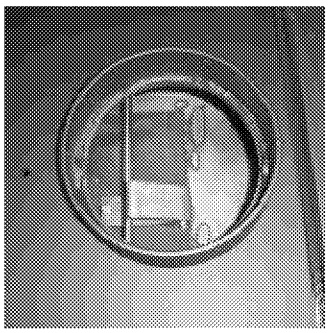

COMBUSTOR OPENING

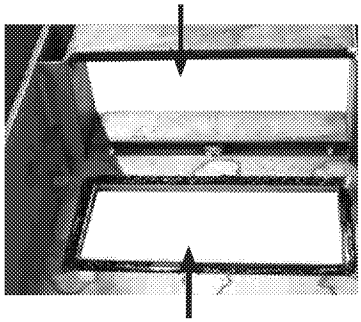

BYPASS DOOR OPENING

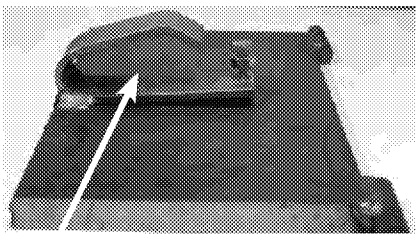

APPLY LUBE TO THE UNDER SIDE OF THE BYPASS RAMP

DOOR GLASS GASKET INSPECTION

When the appliance is cold, hold the glass by placing the palm of each hand on either side of the glass. Press firmly and try to move the glass. If the glass moves the door glass retainers may need to be tightened or the door glass gasket may need to be replaced.

1. Inspect the door glass gasket. If the gasket is frayed or missing sections replace the gasket.
2. Inspect the glass retainers and ensure the screws holding the retainers in place are tight. Hand tighten plus 1/4 turn. Do not over tighten.

DOOR GLASS GASKET REPLACEMENT
BLAZE KING RECOMMENDS YOUR DEALER PERFORM THIS TASK

1. You will require Blaze King glass gasket and Blaze King door gasket. Please see your Blaze King dealer.
2. Remove the old glass gasket.
3. Starting at the corner opposite of the "Blaze King" logo, carefully wrap the gasket around the edges, pressing firmly onto the sides of the glass with the gasket centered on the edge. Finish the wrapping with a 1/2" overlap. Ensure the thickness of the gasket remains consistent and uniform.
4. Install glass with the "Blaze King" logo to the lower left corner of the door. Install the glass retainers with original fasteners. Ensure the glass is parallel to the frame and tighten the fasteners evenly.
5. Follow steps on "**LOADING DOOR GASKET REPLACEMENT**".

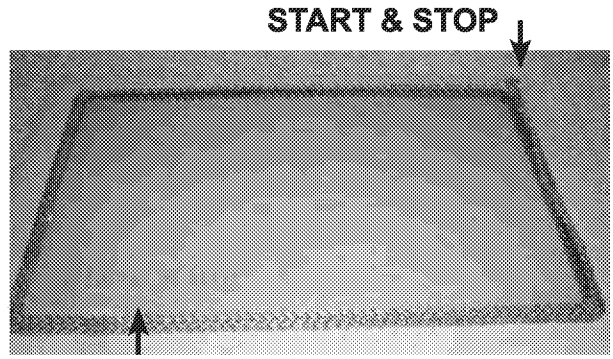

DOOR GLASS, CLEANING

The best way to keep the glass clean is to leave the appliance on high burn for a period of time after each reloading The moisture which is driven from a new load of wood contributes much of the creosote on the inside of the glass. Removing that moisture at the beginning of the burn cycle helps to keep the glass clean. Leaving the thermostat on a higher setting for 30 minutes to an hour before turning to low for an overnight burn will also help. Heavier deposits may require hand cleaning. Manual glass cleaning should be done when the appliance and glass are cool. **DO NOT CLEAN THE GLASS WHILE IT IS HOT. WARNING: Do not use abrasive cleaners to clean the glass**. Use a soft cloth. After using any cleaner, thoroughly rinse the glass with water to remove any deposits left by the cleaner. Failure to remove all traces of glass cleaner will result in the glass cleaner residue baking on. This residue may be very difficult to remove.

ED_005996_00000492-00235

LOADING DOOR TENSION ADJUSTMENT
To tighten the seal, use a 9/16" wrench to loosen retainer nut on the outside and tighten nut on inside firebox to move latch catch in (see figure beside). Secure retainer nut and (repeat) paper test (see "LOADING DOOR GASKET INSPECTION").

Use penetrating oil if necessary to make turning easier.
DO NOT FORCE !!

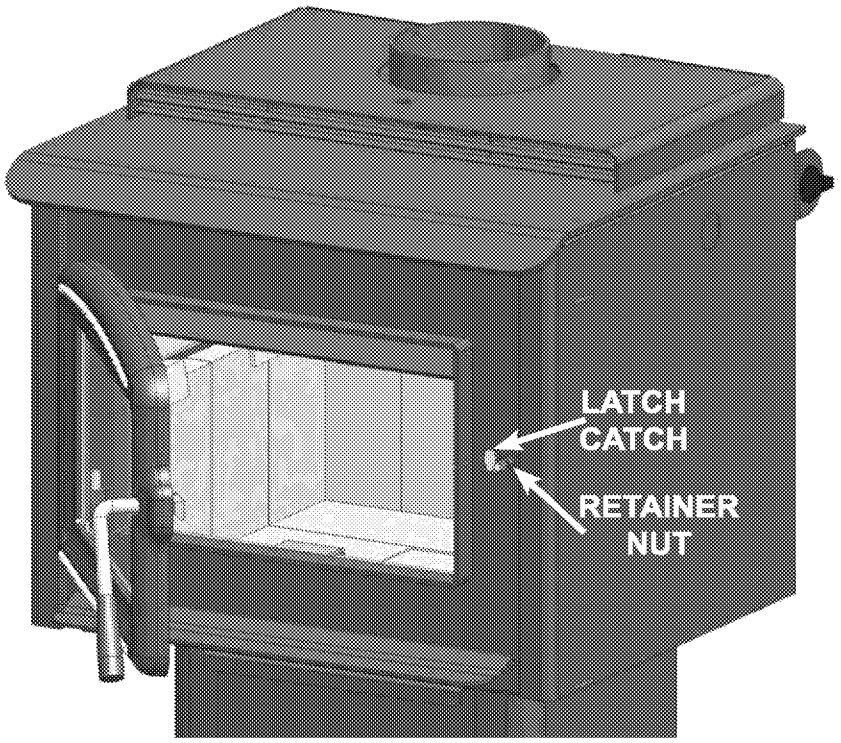

⚠WARNING

DO NOT OPERATE THIS WOOD STOVE IF THE DOOR GASKET IS MISSING OR DAMAGED DANGEROUS OVER FIRING CAN OCCUR WHICH CAN DAMAGE THE APPLIANCE OR IGNITE CREOSOTE IN THE CHIMNEY, POSSIBLY CAUSING A HOUSE FIRE. IF ANY PART OF THE WOODSTOVE OR FLUE SYSTEM IS GLOWING THE STOVE IS BEING OVER FIRED.

ED_005996_00000492-00236

OPTIONAL FAN ASSEMBLY
Routine maintenance of the OPTIONAL Fan Assembly on the back of the stove is not required. However, should it become necessary to replace an individual fan or rheostat, contact your local dealer.

THERMOMETER
The combustor thermometer tells you what was happening 4-8 minutes ago, and remember, it is only an indication of the temperatures of the gasses after they pass through the combustor. The thermometer probe, the part that fits into the stove, must be cleaned at least once a year. Lift it from the stove (be careful, it may be hot) and wipe or scrape it clean. At room temperature, away from the stove, the indicator should point near the bottom of the "Inactive" zone. If, after several years use, you find that the needle no longer points to the bottom of the "Inactive" zone when the thermometer has been at room temperature for 10 minutes or longer, it may need adjustment. Holding the probe with a pair of pliers, loosen the bolt on the top of the dial. Turn the dial to align the pointer with the bottom of the "Inactive" zone, then retighten the bolt.
NOTE: IF YOUR BLAZE KING IS EQUIPPED WITH FANS, TURN OFF FANS AND WAIT 10 MINUTES PRIOR TO READING CATALYTIC THERMOMETER INDICATOR. AIR MOVEMENT ACROSS THE TOP OF THE STOVE MAY PROVIDE FALSE READING.

THERMOSTAT
This wood heater thermostat has a manufacturer-set minimum low burn rate that must not be altered. It is against federal regulations to alter this setting or otherwise operate this wood heater in a manner inconsistent with operating instructions in this manual. If the thermostat malfunctions contact your dealer for replacement by a qualified installer.

ED_005996_00000492-00237

TROUBLESHOOTING

Your Blaze King is designed to allow a wide selection of heat output levels. If you begin to lose control of the amount of heat the stove is emitting, determine the cause early so that major problems may be avoided.
The six major needs of a well-controlled fire are:

1. Knowledgeable operator.
2. Adequate air supply.
3. Firewood of good quality and proper size.
4. Catalytic combustor in good condition.
5. Clean chimney, properly sized and installed.
6. Door gasket tight and firm.

Considering all of the above, number one is the most important for safe and efficient operation of any woodstove. Please study the operation instructions carefully. Consult your BLAZE KING dealer or call the Customer Service Department at Blaze King in the U.S.A. at 509-522-2730 or in Canada at 250-493-7444 if you have any questions not answered in this manual.

All of the six above mentioned needs are interrelated. A deficiency in any one will affect all of the others. If you encounter a problem, determine the source of the problem and then follow-up by checking the other needs as possible contributing factors.

PROBLEM: Chimney Fire	
CAUSE Act immediately regardless of cause	**SOLUTION** Turn the thermostat to lowest setting, check loading door to be sure it is tightly closed. **Call Fire Department.**
After the fire is out, have your chimney and flue connector inspected by a certified chimney sweep. A damaged masonry chimney should be repaired or rebuilt. A prefabricated chimney (factory built) that is damaged should be replaced. Any damage to the flue connector should be corrected before the system is used again. Possible causes of a chimney fire, and remedies for those causes, can be found further in this section: "Excessive Creosote Formation", and "Spots of Creosote Accumulation in Chimney or Flue Connector".	

PROBLEM: Not enough heat.	
CAUSE Green or wet wood. Not enough fuel in stove.	**SOLUTION** Use seasoned wood. Don't be afraid to FULLY load the stove. A FULL load of wood won't burn any hotter than the thermostat is set.
Obstruction in chimney or cap screen. Combustor plugged or coated.	Remove obstruction. See "COMBUSTOR, TESTING" See "COMBUSTOR, CLEANING"
Combustor not functioning.	See "COMBUSTOR, TESTING". If needed, replace combustor, See""COMBUSTOR, REPLACING".
Thermostat set too low.	Raise thermostat setting.
Thermostat not operating properly.	Consult your Blaze King dealer.
Poor draft caused by an oversize flue	Measure draft with Manometer. See "CHIMNEY DRAFTS" Consult your Blaze King dealer or a chimney sweep.
Strong, gusting winds causing downdraft in chimney	Install wind-resistant chimney cap. Directional caps may not stay freely rotating. If you have a directional cap, check it frequently.
Tightly sealed house, inadequate air supply.	Slightly open a window, near the stove or install an outside air kit.
Reloading too much wood on top of too few coals.	Allow a larger bed of coals to build up.

TROUBLESHOOTING

PROBLEM: Too much heat.	
CAUSE	**SOLUTION**
By-Pass door left open.	Close the by-pass door.
Thermostat set too high.	Lower thermostat setting.
Loading door gasket leaking, admitting excess air into firebox.	Replace door gasket and/or adjust door. See "GASKET INSPECTION"
Excessive draft in the chimney.	Measure draft with a Manometer. See "DRAFTS". Consult your Blaze King dealer or a chimney sweep. Install a cap.
Thermostat not operating properly.	Consult your Blaze King dealer.
Wood is too small.	Use larger pieces.

PROBLEM: One or both fans will not run, or there is no adjustment for fan speed.	
CAUSE	**SOLUTION**
Fans mounted improperly.	Check that fan blade's not touch edges of hole.
Fan speed control.	Consult your Blaze King dealer for replacement.

PROBLEM: Fans minimum speed too fast or maximum speed too slow.	
CAUSE	**SOLUTION**
Fan speed control out of adjustment.	Consult your Blaze King Dealer.

PROBLEM: Excessive creosote formation in chimney and chimney Connector.	
CAUSE	**SOLUTION**
By-pass door left open.	Close by-pass door.
By-pass door not sealing tightly.	Inspect by-pass door and seal for warping. Ash or creosote buildup may occur on door or seat. With stove cold scrape and vacuum area around by-pass. Be sure all mating steel surfaces are clean and smooth.
Improper operation.	Check thermostat setting and operating procedures. See "THERMOSTAT & OPTIMAL THERMOSTAT SETTING"
Wood too green or wet.	Use seasoned wood. Use a moisture meter to confirm.
Catalytic combustor not operating properly.	Inspect the combustor. See "CATALYTIC COMBUSTOR, TESTING"
Poor draft caused by an oversize or short flue, etc.	Measure draft with Manometer. See "DRAFTS". Consult your Blaze King dealer or a chimney sweep.
Chimney too cold or poorly insulated.	Upgrade chimney system. Consult your Blaze King dealer or a chimney sweep.

PROBLEM: Catalytic combustor thermometer (on top of stove) does not go into "Active" zone, or does not stay there for long. (Fans must be in "off" position for 10 minutes prior to checking)	
CAUSE	**SOLUTION**
Improper operation.	Check thermostat setting and operating procedures. See "THERMOSTAT & OPTIMAL THERMOSTAT SETTING"
Obstruction in chimney or cap.	Clean chimney, remove obstructions.
Faulty combustor thermometer.	Replace thermometer and Recheck combustor operating Temperature.
Wood too green or wet.	Use seasoned wood.

Combustor plugged or coated.	Clean combustor. See "CATALYTIC COMBUSTOR TESTING"
Combustor not functioning.	Check and test combustor. If needed replace combustor. See "CATALYTIC COMBUSTOR, REPLACING"
Thermostat not operating properly.	Consult your blaze King Dealer.
By-pass door leaking or not closing completely.	Inspect and clean area around by-pass doors. Adjust or replace gasket if necessary. Consult your Blaze King Dealer.

PROBLEM: Spots of creosote accumulation in chimney or chimney connector.	
CAUSE Air leaks in chimney or chimney connector.	**SOLUTION** Inspect chimney and / or chimney connector. Repair or replace as necessary. Check to be sure that the chimney connector is installed correctly.
CAUTION: a leaking chimney connector is a fire hazard and demands immediate attention.	
Poor draft caused by an oversize flue, single wall pipe, to many elbows, etc.	Measure draft with Manometer. See "DRAFTS". Consult your Blaze King dealer or a chimney sweep.

PROBLEM: Door glass quickly becomes coated with creosote.	
CAUSE Low thermostat setting or lowering the thermostat setting too far, too quickly.	**SOLUTION** Turn the thermostat to the warmest setting during the first 20-30 minutes or until the fire is well established after each reloading.
Poor draft caused by an oversize or short flue, etc.	Measure draft with Manometer. See "DRAFTS". Consult your Blaze King dealer or a chimney sweep.
Obstruction in chimney or cap screen.	Remove obstruction. Clean chimney and/or cap screen.
Strong, gusting winds causing downdraft in chimney.	Install wind-resistant chimney cap.
Tightly sealed house, inadequate air supply.	Open a window, slightly, near the stove.
Burning poorly seasoned wet wood, or wood with high pitch content.	Use seasoned wood with low pitch content, such as some types of pine.

PROBLEM: The combustor temperature cannot be controlled. Turning the thermostat down often makes the combustor temperature go up.
CAUSE Turning the thermostat down, particularly in the first half of the burn cycle, causes the fire to emit more smoke, which is fuel for the combustor. The combustor temperature therefore climbs for up to several hours. This is normal, and is of no concern. As long as only the combustor temperature is elevated, there is nothing to worry about.

PROBLEM: Smoke spills from door opening when loading fuel	
CAUSE Spark arrestor screen on cap plugged.	**SOLUTION** Clean spark arrestor screen to bare metal wire.
Chimney too cold.	Make certain double wall stove pipe is used in installation.
Not enough vertical rise.	Make certain a minimum vertical rise of 36" is observed prior to elbows. Use two 45 elbows instead of 90 elbow.
Chimney not drafting.	Turn thermostat to highest setting, open bypass, leave loading door closed and wait 5-10 minutes to increase chimney or flue temperature.

ED_005996_00000492-00240

Z2514 Fan Kit

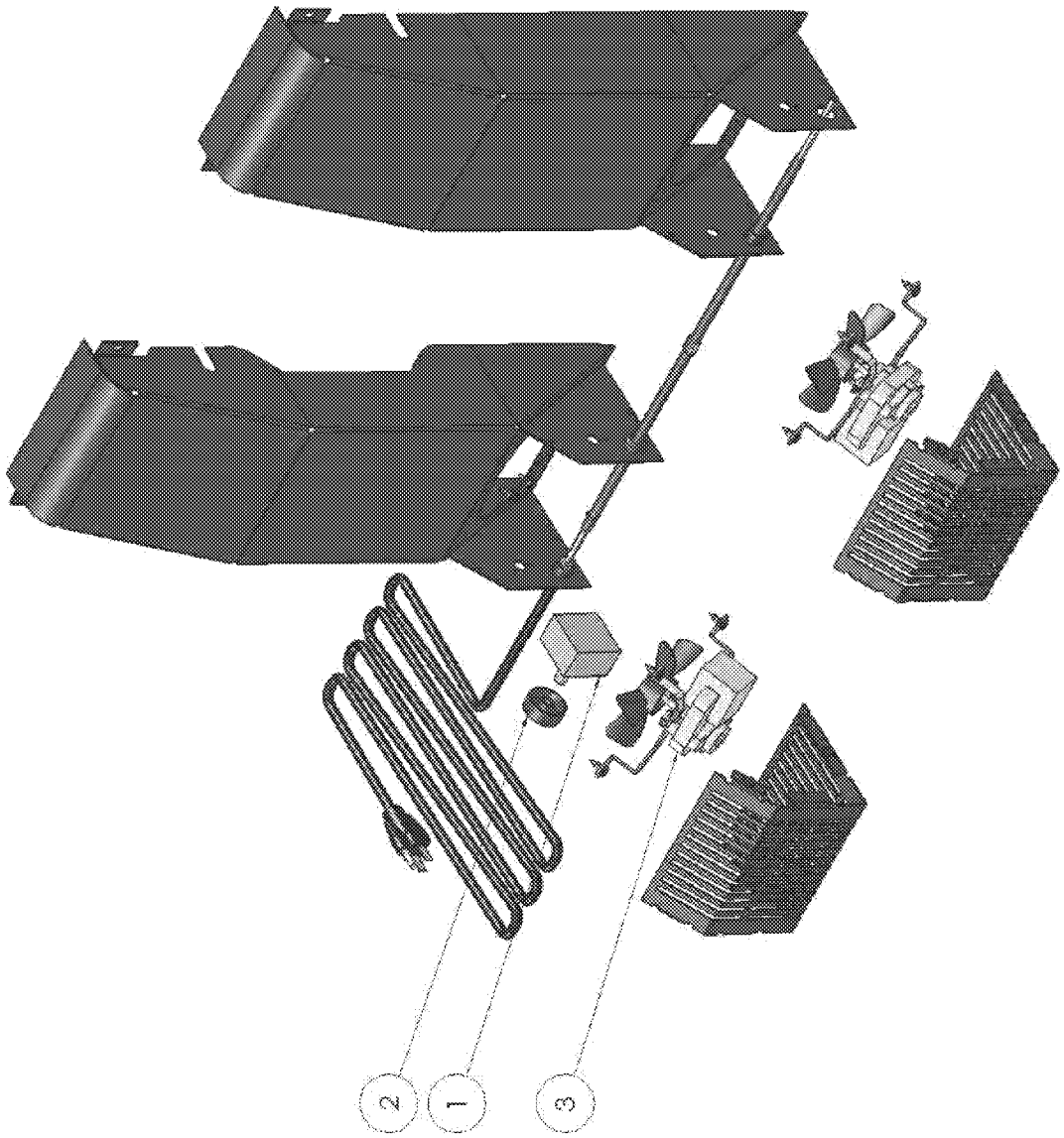

No. exploded view	Part #	Description	QTY
1	H/Z0136	Rheostat with off switch	1
2	H/0137	Rheostat knob silver inlay	1
3	H/Z7005	Replacement axial fan	1

ED_005996_00000492-00241

REPLACEMENT PARTS

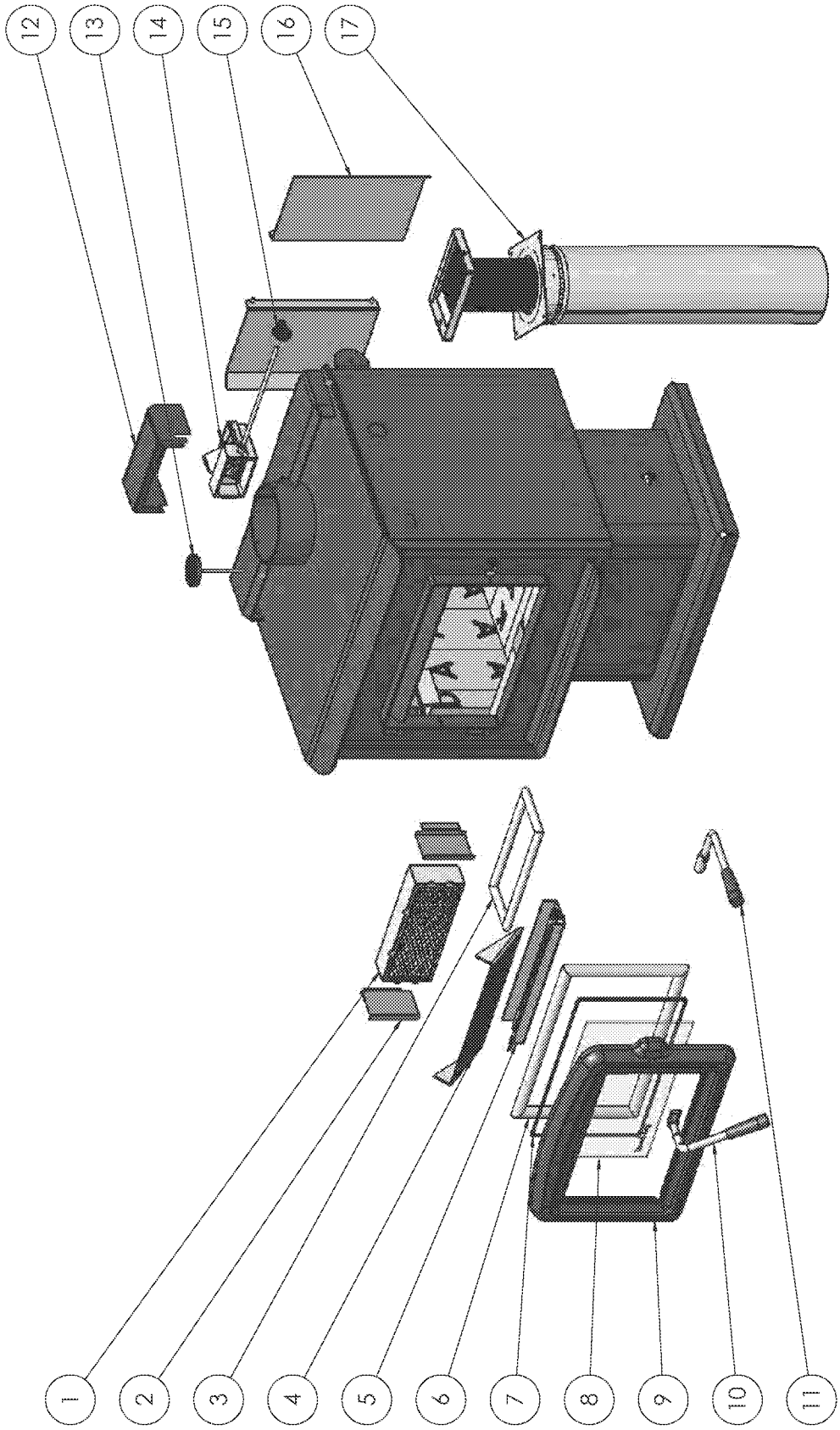

No. exploded view	Part #	Description	QTY
1	Z0336A-M or Z0334	COMBUSTOR 10.65” X 4” X 2” (INCL. GASKET)	1
2	S.Z4498	BYPASS RETAINER KIT	1
3	155.0255.B-3ft	BYPASS GASKET 5/8” DENSE ROUND	1
4	S.Z2430	FLAME SHIELD	1
5	S.Z4551	DOME GUARD REPLACEMENT KIT	1
6	155.0186.S-5ft	DOOR GASKET 7/8” ROUND - 5 FT	1
7	155.0254.AS-4ft	Glass Gasket 1/8 x 3/4 301B W/PSA - 4 ft	1
8	130.0241	5 MM THICK CERAMIC GLASS 15” X 9” W/ GASKET	1
9	S.2680.BK	CAST DOOR SC20.2	1
10	S.Z2644.S.B	DOOR HANDLE SATIN W BLCK SC	1
11	Z2452.BK	BYPASS HANDLE BLK ASM SC	1
12	3241	MAIN TUBE LID	1
13	120.0342.E	CAT THERMOMETER W/PAN 4” PROBE	1
14	Z3009	THERMOSTAT CK30, SC30, AF30	1
15	220.0102	KNOB BLK 1.50 X 75H (THERM)	1
16	S.Z4015	REAR HEAT SHIELD KIT	1
17	S.1726	OUTSIDE AIR KIT	1

Brick Layout

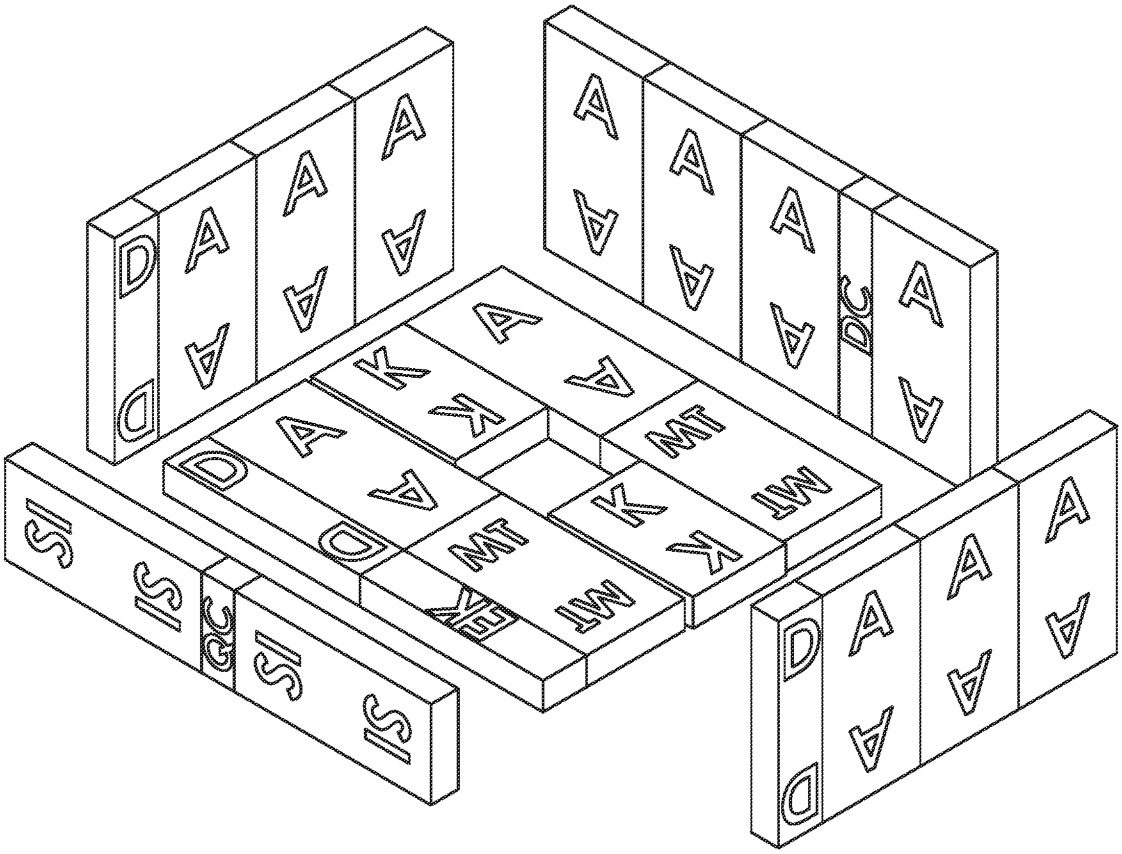

ITEM NO.	PART NUMBER	QTY.
1	A Size Brick	12
2	D Size Brick	3
3	DC Size Brick	1
4	EK Size Brick	1
5	K Size Brick	2
6	MT Size Brick	2
7	QC Size Brick	1
8	SI Size Brick	2

BLAZE KING WOOD LIMITED WARRANTY

Blaze King and Valley Comfort's respective brands extend the following warranty for wood fired appliances purchased from an authorized Blaze King / Valley Comfort dealer and installed in the United States of America or Canada. Warranty starts with date of purchase by the original owner (End User) except as noted for replacement parts.

Warranty Period		Components Covered	
Parts	Labor	Wood	
1 Year		X	All parts, materials and surface finishes (flaking and peeling) Subject to Conditions, Exclusion, and Limitations listed.
2 Years		X	Fan assemblies and motors, thermal sensors, catalytic thermometer, bi-metallic thermostat assembly, door handle metal components.
5 Years	2 Years	X	Firebox & Heat Exchanger, Bypass Door Steel Components
6 Years		X	Catalyst Combustor (see Conditions, Exclusions, and Limitations)
1 Year		X	Other Replacement Parts
See Conditions, Exclusions, and Limitations			

Blaze King Wood Limited 5 Year Warranty

Blaze King is the manufacturer of the Blaze King line of heating products. At Blaze King, our commitment to the highest level of quality and customer service is the most important thing we do. Each Blaze King stove is built on a tradition of using only the finest materials and is backed by our limited warranty to the original purchaser. With Blaze King, you're not just buying a stove; you're buying a company with years of unequalled performance and quality.

Limited Six (6) Year Warranty:
The CATALYTIC COMBUSTOR is under warranty by Blaze King for six (6) years from the date of original retail purchase. The purchaser shall pay the following share of the then current retail price for the combustor: The first three (3) years no charge, 4th year 60%; 5th year 70%, 6th year 80%. The Combustor must be returned to your dealer along with a completed COMBUSTOR FAILURE REPORT and original proof of purchase document.

Limited (5) Year Warranty:
Under this warranty, Blaze King covers the stove body and accessories against defects in materials and workmanship, for part repair or replacement for the first five (5) years *** to the original purchaser. This Warranty covers: All Steel firebox components against defects in material and workmanship. Please see the exclusions and limitation section below as certain restrictions and exclusions apply this warranty.

Limited Two (2) Year Warranty:
Under this warranty, Blaze King covers, fan assemblies , modular thermostat and door handle steel components against defects in materials and workmanship, for part repair or replacement and limited labor for the first two (2) years to the original purchaser. Please see the exclusions and limitation section below as certain restrictions and exclusions apply to this warranty.

Limited One (1) Year Warranty:
Under this warranty, Blaze King covers all parts and materials against defects in materials and workmanship including exterior paint finishes, for part repair or replacement and limited labor for the first year to the original purchaser. Please see the exclusions and limitation section below as certain restrictions and exclusions apply to this warranty.

How the Warranty Works

1. All warranties by the manufacturer are set herein and no claim shall be made against the manufacturer on any oral warranty or representation. All claims under this Limited Warranty must be made in writing by your dealer.
2. Any stove or part thereof that is repaired or replaced during the Limited Warranty period will be warranted under the terms of the Limited Warranty for a period not exceeding the remaining term of the original Limited Warranty or six (6) months, whichever is longer.
3. For any part or parts of this stove, which in our judgment show evidence of defects, Blaze King reserves the option to repair or to replace the defective part(s) through an accredited distributor or agent, provided the defective part is returned to the distributor or agent, transportation prepaid, if requested.
4. If you discover a problem that you think may be covered by the Limited Warranty, you MUST REPORT it to your Blaze King dealer WITHIN 30 DAYS from the date the problem was first detected, giving them proof of purchase and the date of purchase. The dealer will investigate the problem and work with Blaze King to determine whether the problem:
   a) Is covered by the Limited Warranty or
   b) Can be fixed in your home or does the product need to be returned to Blaze King for repair.
5. If Blaze King determines that the stove needs to be returned to Blaze King for repair, the customer has the responsibility and the expense of removing it from their home and shipping it to Blaze King. If the problem is covered by the Warranty, Blaze King will repair or replace the item at their discretion and the customer will be responsible for return shipping and re-installation in their home.
6. If the problem is not covered by the Limited Warranty, the customer will be responsible for all repair costs, as well as all storage, shipping and the cost of removing and re-installing the stove.
   If you are not satisfied with the service provided by the Blaze King dealer, write to Blaze King at the address listed on the last page of the Owner's Manual. Include a copy of the original purchase invoice and a description of the problem.

ED_005996_00000492-00246

Exclusions and Limitations:

1. This Warranty does not cover tarnish, discoloration or wear on the plated surfaces Painted finishes will change color after initial firing and will continue to change through the lifetime of the stove. This is normal occurrence for all high temperature coatings.
2. This Warranty does not cover gasket material or firebrick.
3. Blaze King strongly recommends installation by a certified installer. Failure to comply may adversely affect coverage under the terms of this warranty. This Limited Warranty covers defects in materials and workmanship only if the product has been installed in accordance with local building and fire codes; in their absence refer to the owner's manual. If the product is damaged or broken as a result of any alteration, wilful abuse, mishandling, accident, neglect, or misuse of the product, the Limited Warranty does not apply.
4. The stove must be operated and maintained at all times in accordance with the instructions in the Owner's Manual. If the unit shows signs of neglect or misuse, it is not covered under the terms of this Warranty policy. Performance problems due to operator error will not be covered by the Limited Warranty policy.
   Some minor expansion, contraction, or movement of certain parts and resulting noise, is normal and not a defect and, therefore, is not covered under this Limited Warranty.
5. Misuse includes over-firing. Over-firing can be identified later by warped plates and paint pigment being burnt off. Over-firing this appliance can cause serious damage and will nullify the Limited Warranty.
6. The Limited Warranty will cover glass thermal breakage only and will not cover misuse of the stove glass, including but not limited to:
   a) Glass that is struck, has surface contaminates or has had harsh or abrasive cleaners used on it.
   b) If the door is slammed or is closed while wood in the firebox is protruding out the stove opening thus striking the glass.
7. This warranty does not cover products made or provided by other manufacturers and used in conjunction with the operation of this stove without prior authorization from Blaze King The use of such products may nullify the Limited Warranty on this stove. If unsure as to the extent of this Limited Warranty, contact your authorized Blaze King dealer before installation.
8. Blaze King will not be responsible for inadequate performance caused by environmental conditions.
9. The Limited Warranty does not cover installation and operational related problems such as use of downdrafts or spillage caused by environmental conditions. Environmental conditions include but are not limited to nearby trees, buildings, roof tops, wind, hills, mountains, inadequate venting or ventilation, excessive offsets, negative air pressures or other influences caused by mechanical systems such as furnaces, fans, clothes dryers etc.
10. The Limited Warranty does not cover damage caused by burning salt-saturated wood, corrosive driftwood, chemically treated wood or any fuel not recommended in the Owner's Manual (use cord wood only).
11. The Limited Warranty is void if:
    a) The stove has been operated in atmospheres contaminated by chlorine, fluorine or other damaging chemicals.
    b) The stove is subject to submersion in water or prolonged periods of dampness or condensation.
    c) Any damage to the unit, combustion chamber or other components due to water, or weather damage which is the result of, but not limited to, improper chimney/venting installation.
    d) Salt air in coastal areas or high humidity can be corrosive to the finish; these environmental conditions can cause rusting. Damage caused by salt air or high humidity is not covered by the Limited Warranty.
12. Exclusions to the Limited Warranty include: injury, loss of use, damage, failure to function due to accident, negligence, misuse, improper installation, alteration or adjustment of the manufacturer's settings of components, lack of proper and regular maintenance, alteration, or act of God.
13. The Limited Warranty does not cover damage caused to the stove while in transit. If this occurs, do not operate the stove and contact your courier and/or dealer.
14. The Limited Warranty does not extend to or include paint, door or glass gaskets or firebricks damage caused by normal wear and tear, such as paint discoloration or chipping, worn or torn gaskets, chipped or cracked firebrick, etc.
15. The Limited Warranty does not include damage to the unit caused by abuse, improper installation, or modification of the unit.
16. Damage to plated surfaces caused by fingerprints, scratches, melted items, or other external scores and residues left on the plated surfaces from the use of abrasive cleaners or polishes is not covered in this warranty.

17. Blaze King is free of liability for any damages caused by the stove, as well as inconvenience expenses and materials. The Limited Warranty does not cover incidental or consequential damages.
18. The Limited Warranty does not cover any loss or damage incurred by the use or removal of any component or apparatus to or from the Blaze King stove without the express written permission of Blaze King and bearing a Blaze King label of approval.
19. Any statement or representation of Blaze King Products and their performance contained in Blaze King advertising, packaging literature, or printed material is not part of the Limited Warranty.
20. The Limited Warranty is automatically voided if the stove's serial number has been removed or altered in any way. If the stove is used for commercial purposes, it is excluded from the Limited Warranty.
21. No dealer, distributor, or similar person has the authority to represent or warrant Blaze King Products beyond the terms contained within the Limited Warranty. Blaze King assumes no liability for such warranties or representations.
22. Blaze King will not cover the cost of the removal or re-installation of the stove, hearth, facing, mantels, venting or other components.
23. Labor to replace or repair items under this Limited Warranty will be covered per our warranty service fee reimbursement and labor rates are set per component schedule. Labor rates vary from location to location and as such total labor costs may not be covered. Please consult with your dealer or service technician for any additional charges such as travel time or additional labor charges that may apply.
24. For parts of the Blaze King woodstove or fireplace insert warranted beyond the first year, the five year limited warranty will have the same obligations as described in this document, provided, however that the purchaser shall pay the following percentage of the then current retail cost of the repair or the replacement, according to the year after purchase in the which the defect is brought to the attention of Blaze King.*** During the 2nd year----purchaser pays 20%. 3rd year ----purchaser pays 40%. 4th year -----purchaser pays 60%. 5th year---- purchaser pays 80%.
25. If a defect or problem is determined by Blaze King to be non warrantable, Blaze King is not liable for travel costs for service work. In the event of in-home repair work, the customer will pay any in-home travel fees or service charges required by the Authorized Dealer.
26. At no time will Blaze King be liable for any consequential damages which exceed the purchase price of the unit. Blaze King has no obligation to enhance or modify any stove once manufactured (example: as a stove model evolves, field modifications or upgrades will not be performed).
27. This Limited Warranty is applicable only to the original purchaser and it is nontransferable.
28. This warranty only covers Blaze King Products that are purchased through an authorized Blaze King dealer.
29. If for any reason any section of the Limited Warranty is declared invalid, the balance of the warranty remains in effect and all other clauses shall remain in effect.
30. The Limited Warranty is the only warranty supplied by Blaze King, the manufacturer of the stove. All other warranties, whether express or implied, are hereby expressly disclaimed and the purchaser's recourse is expressly limited to the Limited Warranty.
31. Blaze King and its employees or representatives will not assume any liability for damages, either directly or indirectly, caused by improper usage, operation, installation, servicing or maintenance of this stove.
32. Blaze King reserves the right to make changes without notice. Please complete and mail the warranty registration card and have the installer fill in the installation data sheet in the back of the manual for warranty and future reference.
33. Blaze King is responsible for stocking parts for a maximum of seven (7) years after discontinuing the manufacture or incorporation of the item into its products. An exception to this would be if an OEM supplier is not able to supply a part.

ED_005996_00000492-00248

NOTES

NOTES

INSTALLER NOTES

Installer: Please complete the following information

Dealer Name & Address: _____

_____

Installer (print): _____

Installer (sign): _____

Phone #: _____

Date Installed: _____

Serial No.: _____