Question 1

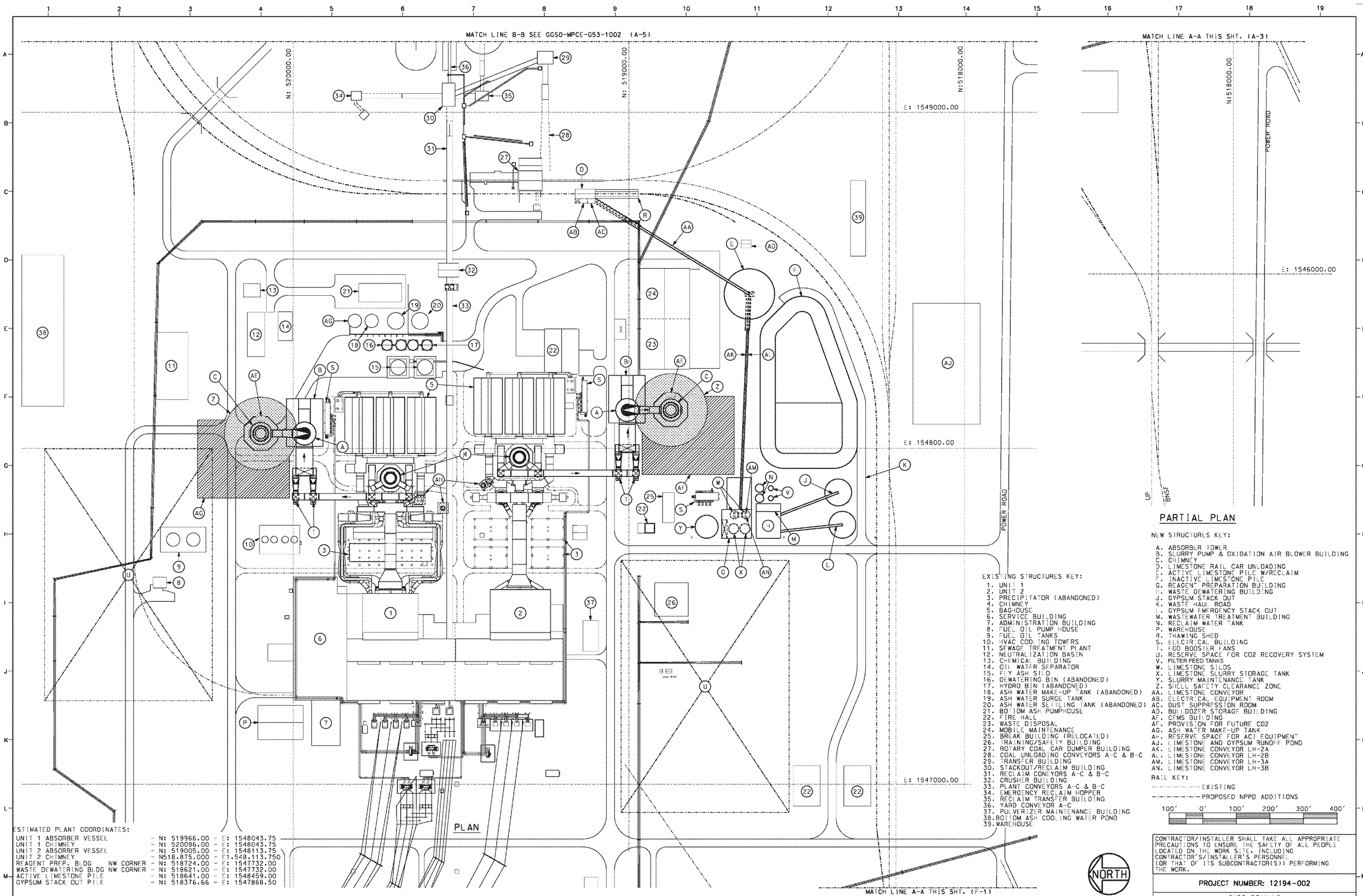

NPPDRH114_0003959

Question 1

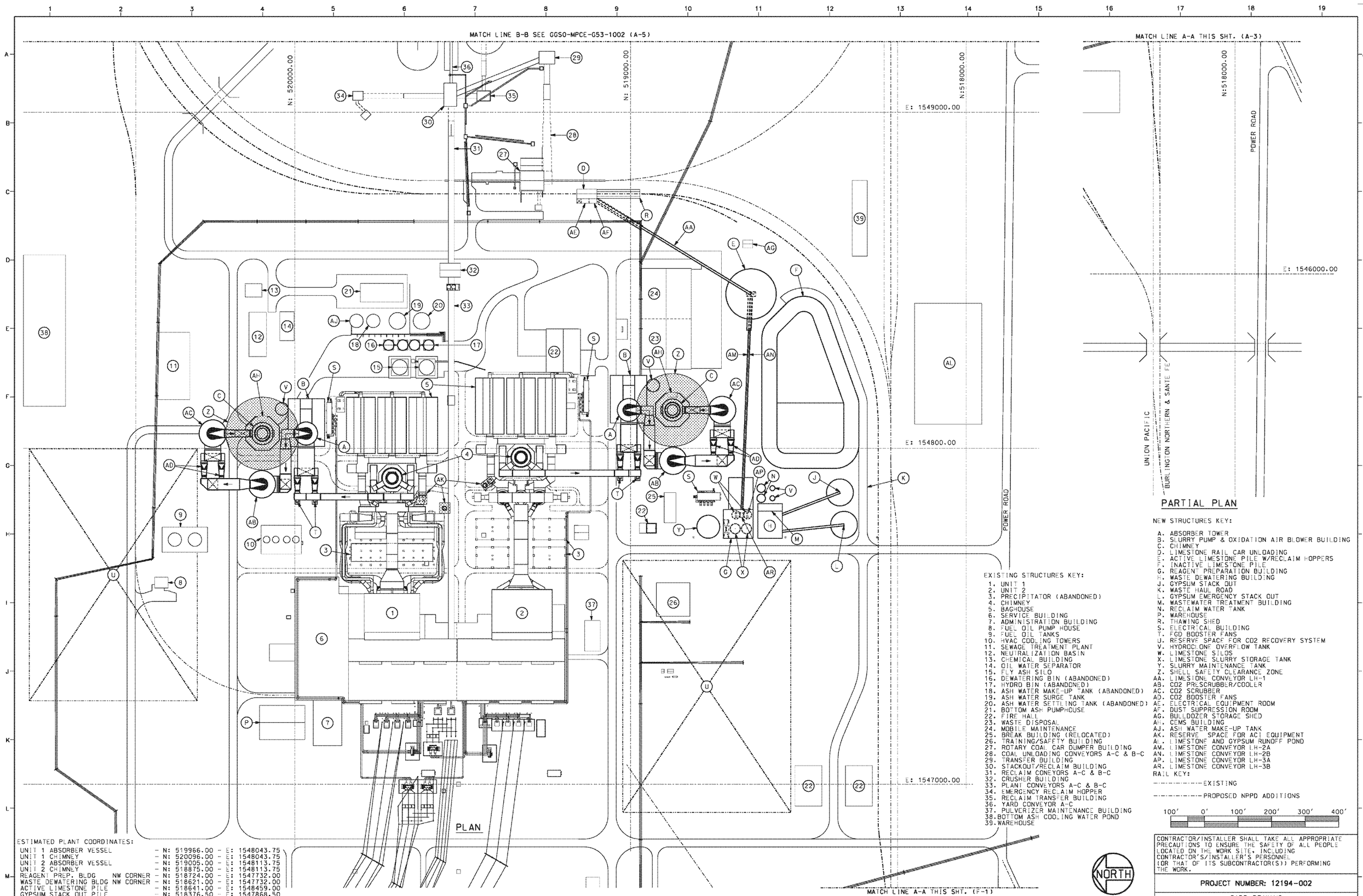

NPPDRH114_0003960

Question 1

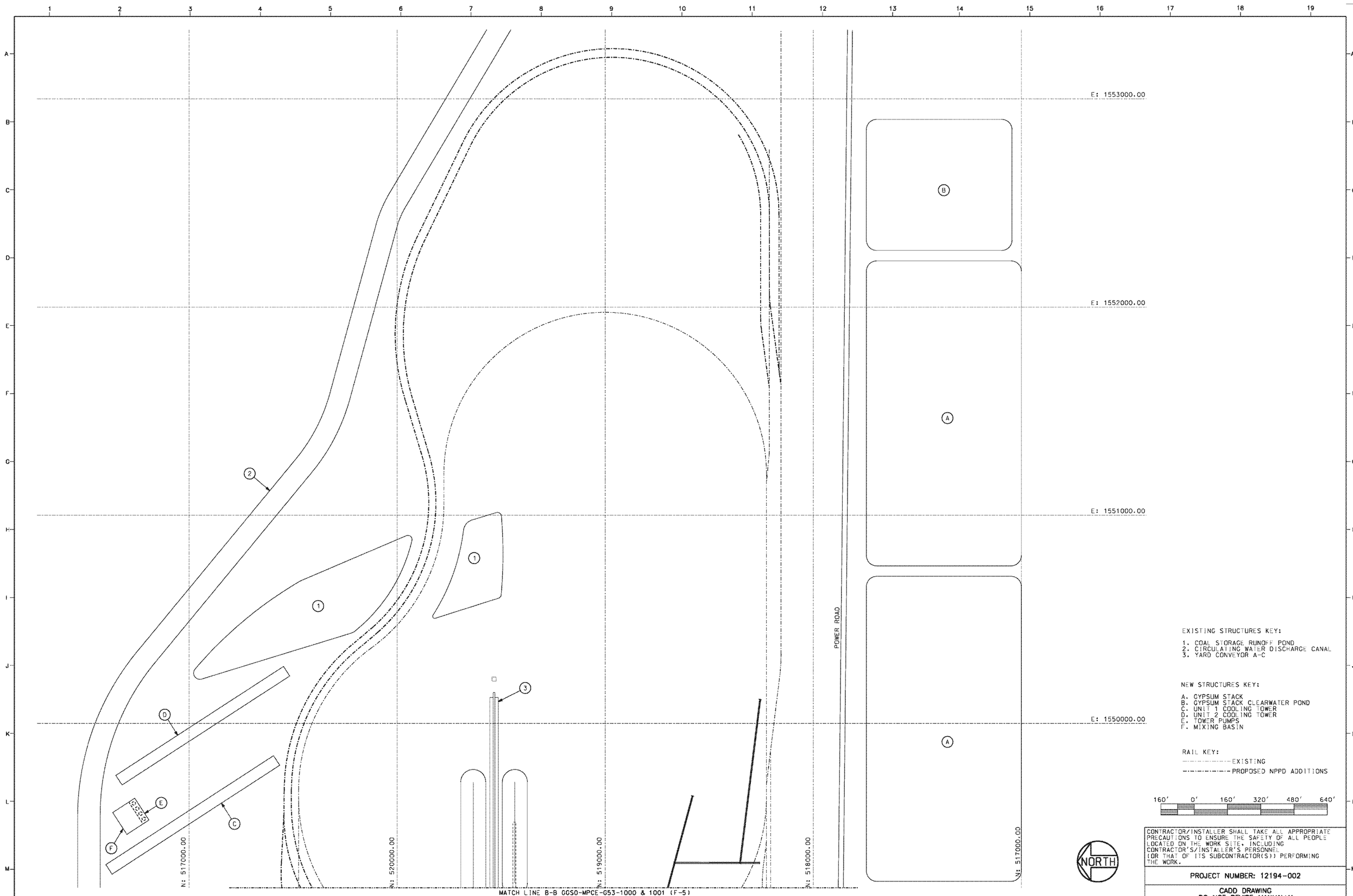

NPPDRH114_0003961

Question 1

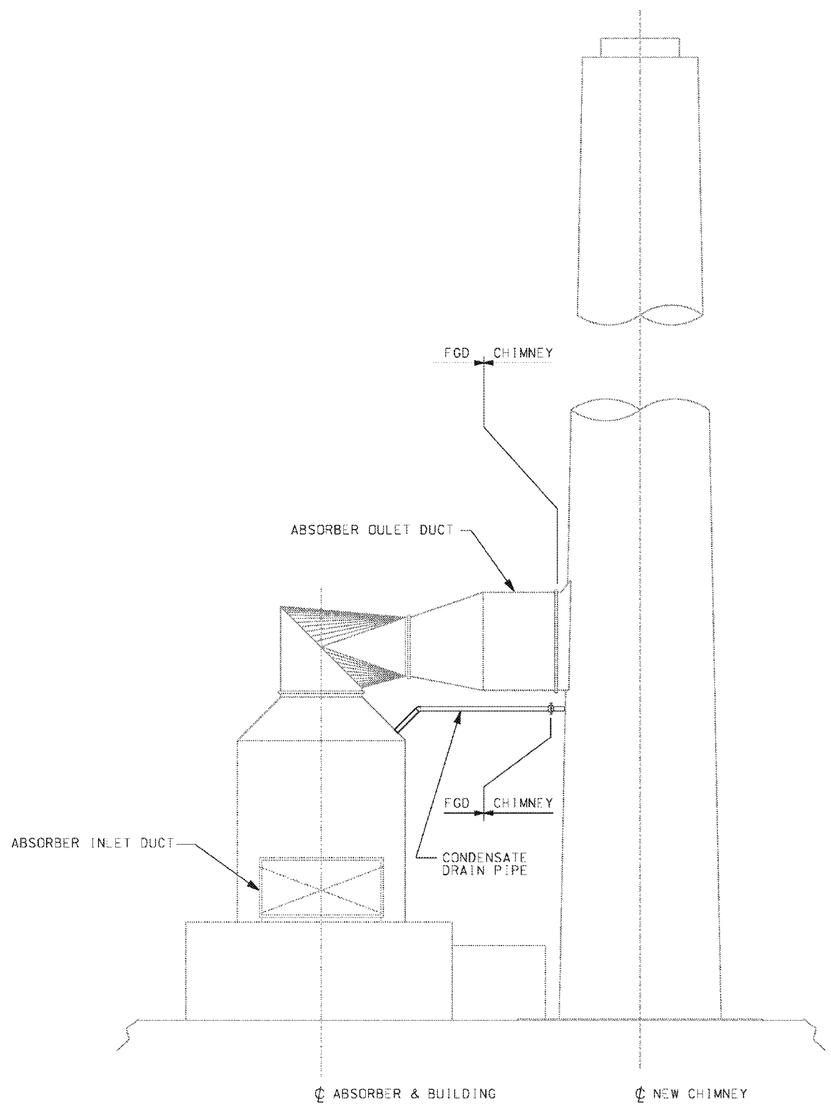

SECTION 1-1

SEE MSK-WETFGD02

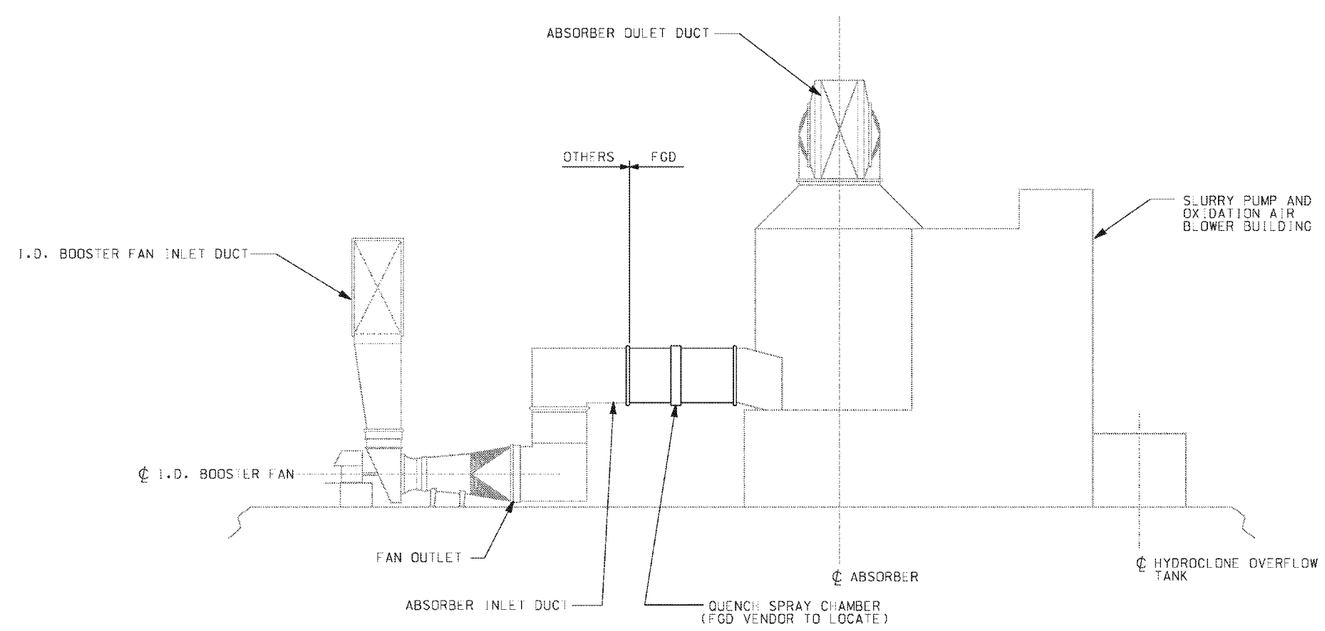

SECTION 2-2

SEE MSK-WETFGD02

NOTES:
1. CONTRACTOR IS RESPONSIBLE FOR CONDENSATE DRAIN PIPING FROM CHIMNEY TO FGD VESSEL.
2. CONTRACTOR IS RESPONSIBLE FOR SUPPLY AND INSTALLATION OF DUCT FROM FGD OUTLET TO CHIMNEY BREECHING, INCLUDING EXPANSION JOINT.
3. ARRANGEMENT OF DUCT FROM FGD OUTLET TO CHIMNEY BREECHING IS CONFIGURED ROUND FGD OUTLET, ROUND TO SQUARE TRANSITION, AND SQUARE TO RECTANGULAR TRANSITION AT BREECHING.

25' 0' 25' 50' 75' 100'

CONTRACTOR/INSTALLER SHALL TAKE ALL APPROPRIATE PRECAUTIONS TO ENSURE THE SAFETY OF ALL PEOPLE LOCATED ON THE WORK SITE, INCLUDING CONTRACTOR'S/INSTALLER'S PERSONNEL (OR THAT OF ITS SUBCONTRACTOR(S)) PERFORMING THE WORK.

FILENAME: MSKWETFGD0101.DGN

DRAWING RELEASE RECORD

REV.	DATE REL'D.	PREPARED	REVIEWED	APPROVED	PURPOSE

DRAWING RELEASE RECORD

REV.	DATE REL'D.	PREPARED	REVIEWED	APPROVED	PURPOSE

SCALE: NONE

PROJECT NUMBER: 12194-001

GENERAL ARRANGEMENT
WET FGD I.D. BOOSTER FANS
MULTI-POLLUTANT CONTROL
EQUIPMENT PROJECT
GERALD GENTLEMAN STATION
NEBRASKA PUBLIC
POWER DISTRICT

Sargent & Lundy LLC

DRAWING NO. MSK-WETFGD01 REV.

SHEET 1 OF

NPPDRH114_0003962

Question 1

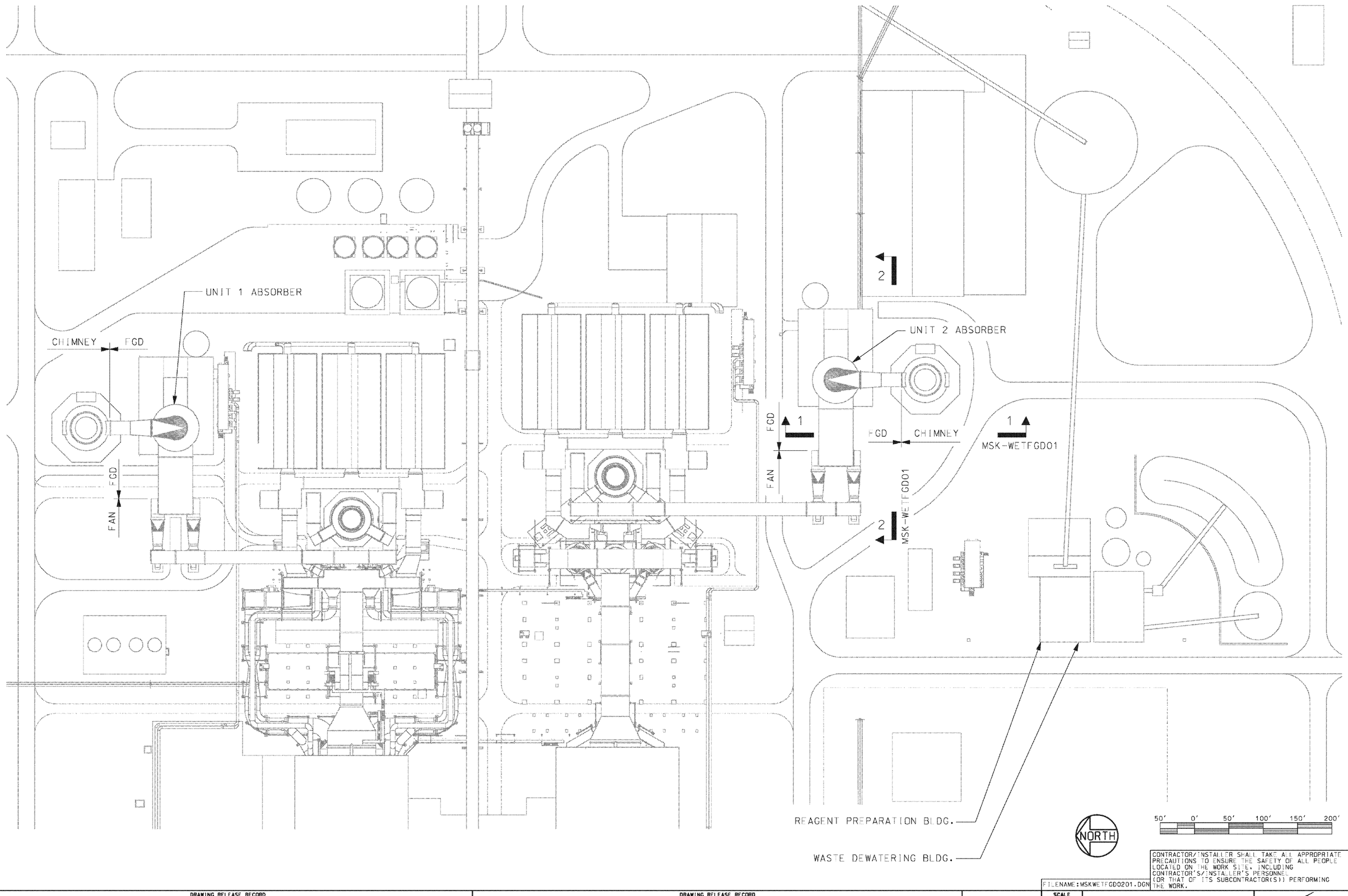

CONTRACTOR/INSTALLER SHALL TAKE ALL APPROPRIATE PRECAUTIONS TO ENSURE THE SAFETY OF ALL PEOPLE LOCATED ON THE WORK SITE, INCLUDING CONTRACTOR'S/INSTALLER'S PERSONNEL (OR THAT OF ITS SUBCONTRACTOR(S)) PERFORMING THE WORK.

FILENAME: MSKWETFGD0201.DGN

DRAWING RELEASE RECORD					
REV.	DATE REL'D.	PREPARED	REVIEWED	APPROVED	PURPOSE

DRAWING RELEASE RECORD					
REV.	DATE REL'D.	PREPARED	REVIEWED	APPROVED	PURPOSE

SCALE: NONE

PROJECT NUMBER: 12194-001

GENERAL ARRANGEMENT
WET FGD INTERFACE POINTS
MULTI-POLLUTANT CONTROL
EQUIPMENT PROJECT
GERALD GENTLEMAN STATION
NEBRASKA PUBLIC
POWER DISTRICT

Sargent & Lundy LLC

DRAWING NO. MSK-WETFGD02 REV.

SHEET 1 OF

ZD3207/035255/01#GS#codre#design#temp#msk-wet-fgd0201.dgn
12/22/2009 4:22:34 PM

REV. 417/1/20041

NPPDRH114_0003963

ED_005798_00000554-00005

Question 1

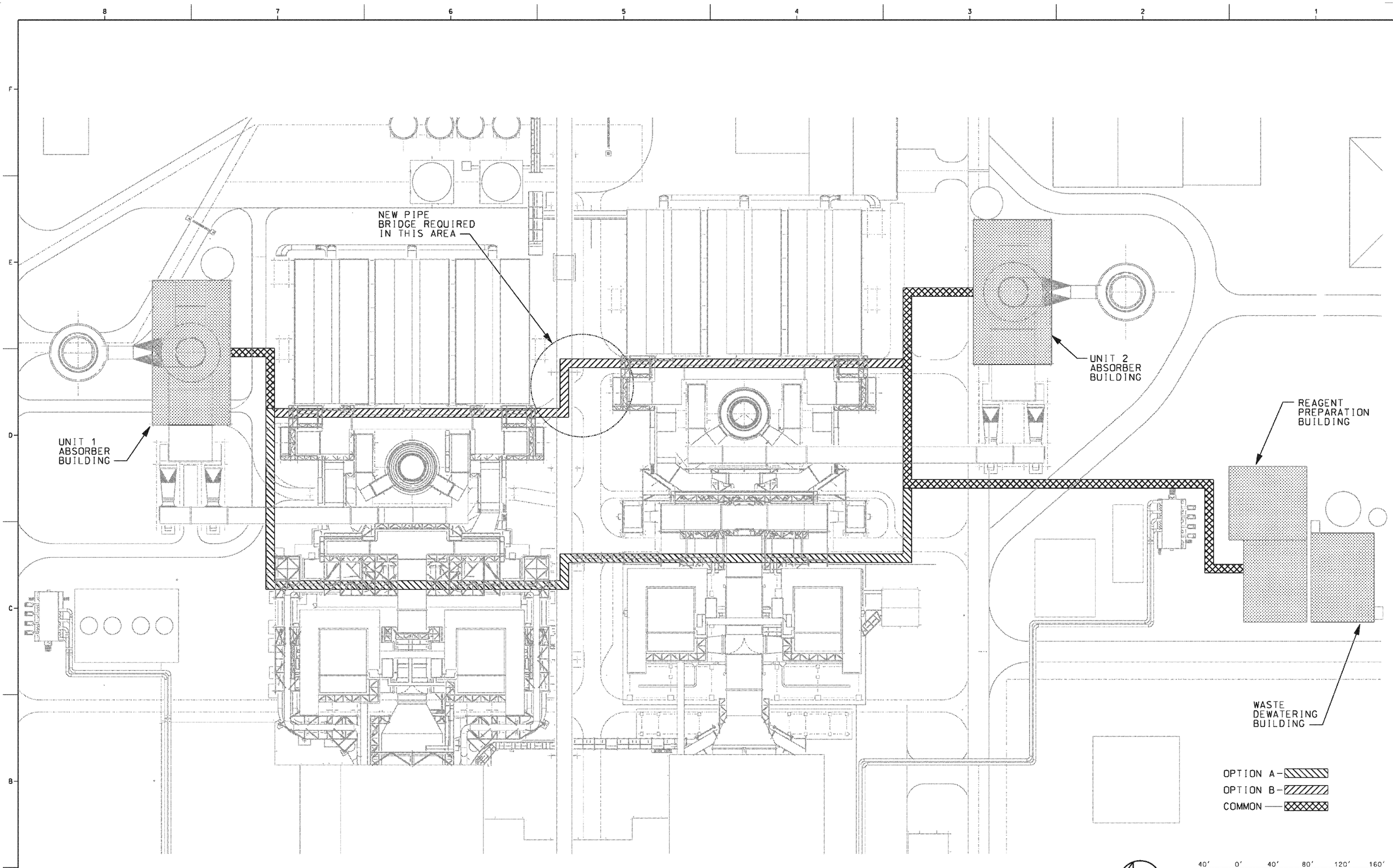

CONTRACTOR/INSTALLER SHALL TAKE ALL APPROPRIATE PRECAUTIONS TO ENSURE THE SAFETY OF ALL PEOPLE LOCATED ON THE WORK SITE, INCLUDING CONTRACTOR'S/INSTALLER'S PERSONNEL (OR THAT OF ITS SUBCONTRACTOR(S)) PERFORMING THE WORK.

FILENAME:MSKWETFGD0301.DGN

DRAWING RELEASE RECORD					
REV.	DATE REL'D.	PREPARED	REVIEWED	APPROVED	PURPOSE

DRAWING RELEASE RECORD					
REV.	DATE REL'D.	PREPARED	REVIEWED	APPROVED	PURPOSE

SCALE: 1"=100'

PROJECT NUMBER: 12194-001

GENERAL ARRANGEMENT
WET FGD PIPE RACKS
MULTI-POLLUTANT CONTROL
EQUIPMENT PROJECT
GERALD GENTLEMAN STATION
NEBRASKA PUBLIC
POWER DISTRICT

Sargent & Lundy LLC

DRAWING NO. MSK-WETFGD03 REV.

SHEET 1 OF

ZD3207/035255/01#GS#ccdms#design#temp#msk#wet-fgd0301.dgn
12/22/2009 4:23:24 PM

REV. 417/(2004)

NPPDRH114_0003964

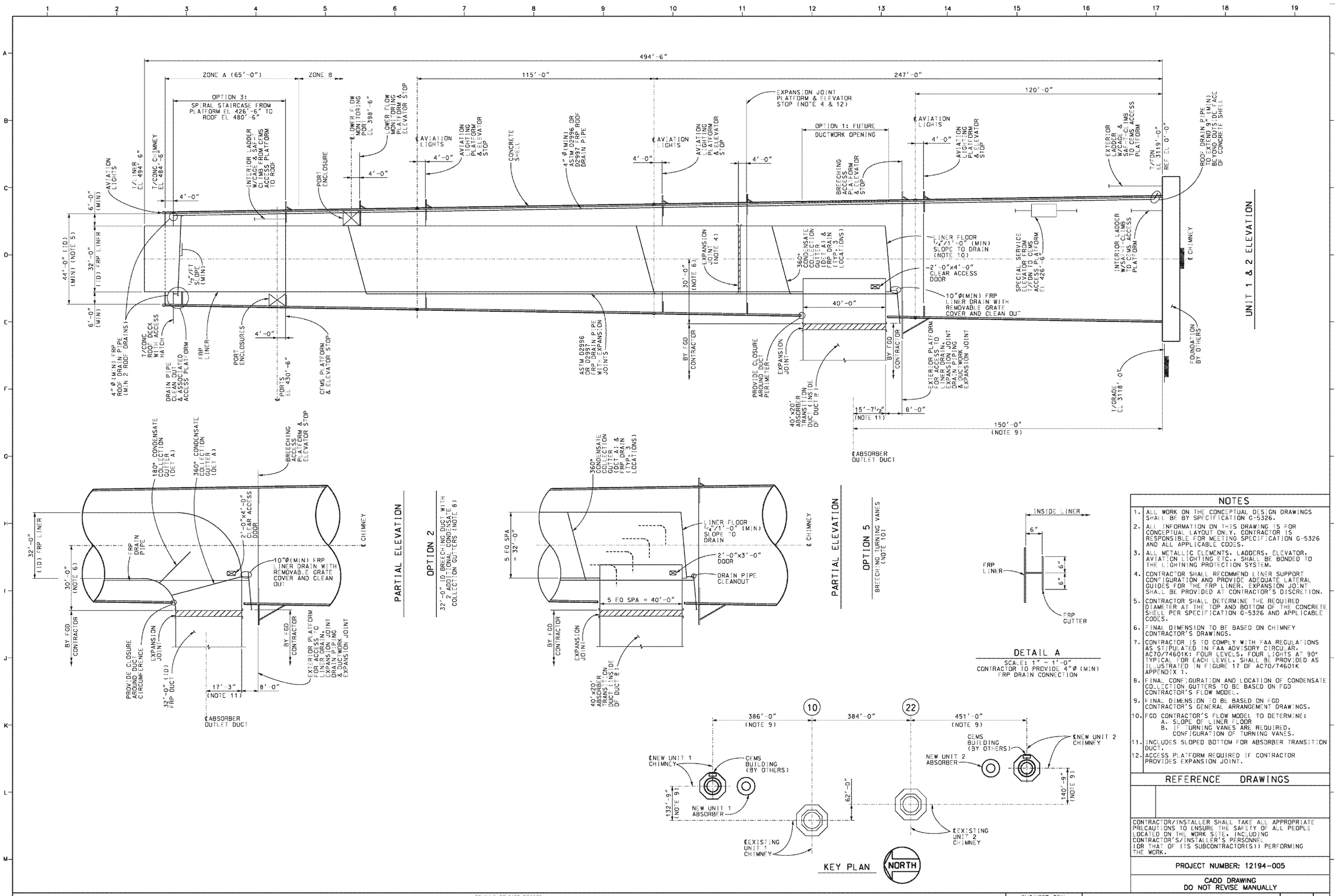

NOTES

1. ALL WORK ON THE CONCEPTUAL DESIGN DRAWINGS SHALL BE BY SPECIFICATION G-5326.
2. ALL INFORMATION ON THIS DRAWING IS FOR CONCEPTUAL LAYOUT ONLY. CONTRACTOR IS RESPONSIBLE FOR MEETING SPECIFICATION G-5326 AND ALL APPLICABLE CODES.
3. ALL METALLIC ELEMENTS, LADDERS, ELEVATOR, AVIATION LIGHTING ETC., SHALL BE BONDED TO THE LIGHTNING PROTECTION SYSTEM.
4. CONTRACTOR SHALL RECOMMEND LINER SUPPORT CONFIGURATION AND PROVIDE ADEQUATE LATERAL GUIDES FOR THE FRP LINER. EXPANSION JOINT SHALL BE PROVIDED AT CONTRACTOR'S DISCRETION.
5. CONTRACTOR SHALL DETERMINE THE REQUIRED DIAMETER AT THE TOP AND BOTTOM OF THE CONCRETE SHELL PER SPECIFICATION G-5326 AND APPLICABLE CODES.
6. FINAL DIMENSION TO BE BASED ON CHIMNEY CONTRACTOR'S DRAWINGS.
7. CONTRACTOR IS TO COMPLY WITH FAA REGULATIONS AS STIPULATED IN FAA ADVISORY CIRCULAR, AC70/74601K: FOUR LEVELS, FOUR LIGHTS AT 90° TYPICAL FOR EACH LEVEL, SHALL BE PROVIDED AS ILLUSTRATED IN FIGURE 17 OF AC70/74601K APPENDIX 1.
8. FINAL CONFIGURATION AND LOCATION OF CONDENSATE COLLECTION GUTTERS TO BE BASED ON FGD CONTRACTOR'S FLOW MODEL.
9. FINAL DIMENSION TO BE BASED ON FGD CONTRACTOR'S GENERAL ARRANGEMENT DRAWINGS.
10. FGD CONTRACTOR'S FLOW MODEL TO DETERMINE:
    A. SLOPE OF LINER FLOOR
    B. IF TURNING VANES ARE REQUIRED, CONFIGURATION OF TURNING VANES.
11. INCLUDES SLOPED BOTTOM FOR ABSORBER TRANSITION DUCT.
12. ACCESS PLATFORM REQUIRED IF CONTRACTOR PROVIDES EXPANSION JOINT.

REFERENCE DRAWINGS

CONTRACTOR/INSTALLER SHALL TAKE ALL APPROPRIATE PRECAUTIONS TO ENSURE THE SAFETY OF ALL PEOPLE LOCATED ON THE WORK SITE, INCLUDING CONTRACTOR'S/INSTALLER'S PERSONNEL (OR THAT OF ITS SUBCONTRACTOR(S)) PERFORMING THE WORK.

PROJECT NUMBER: 12194-005

CADD DRAWING
DO NOT REVISE MANUALLY

DRAWING RELEASE RECORD

REV.	DATE REL'D.	PREPARED	REVIEWED	APPROVED	PURPOSE	REV.	DATE REL'D.	PREPARED	REVIEWED	APPROVED	PURPOSE
						A	11-02-2009	T. DIETZ	G. WILLMAN	-	FOR BIDS - SPEC G-5326

ENGINEER SEAL

CONCEPTUAL DESIGN OF UNIT 1 & UNIT 2
CONCRETE CHIMNEY WITH FRP LINER
ELEVATIONS

NEBRASKA PUBLIC POWER DISTRICT
UNIT NO. 1&2 GERALD GENTLEMAN STATION SUTHERLAND, NEBRASKA

SCALE 1/16"= 1'-0" UN | Sargent & Lundy LLC | P.O./CONTRACT 4700000926

DOC. NO GGSU1 -MPCE
SHEET NO. C14-1000
REV. A
CADD FILE: GGSU1-MPCE-C14-1000

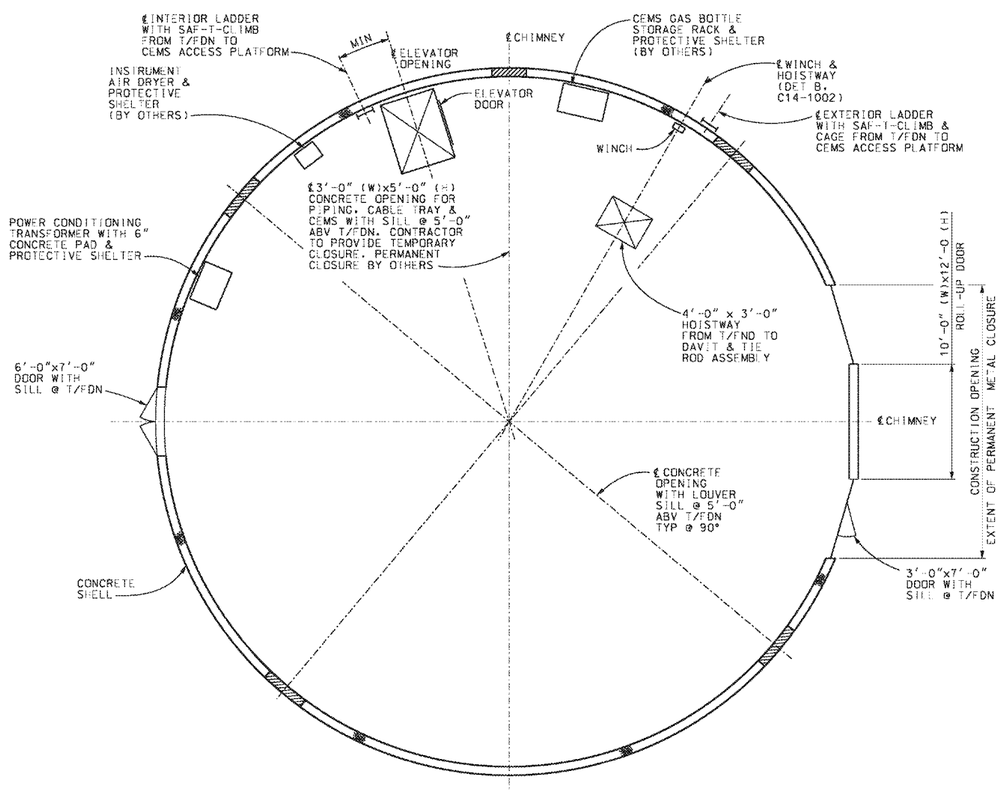

PLAN @ T/FDN

UNIT 2 AS SHOWN
UNIT 1 OPPOSITE HAND

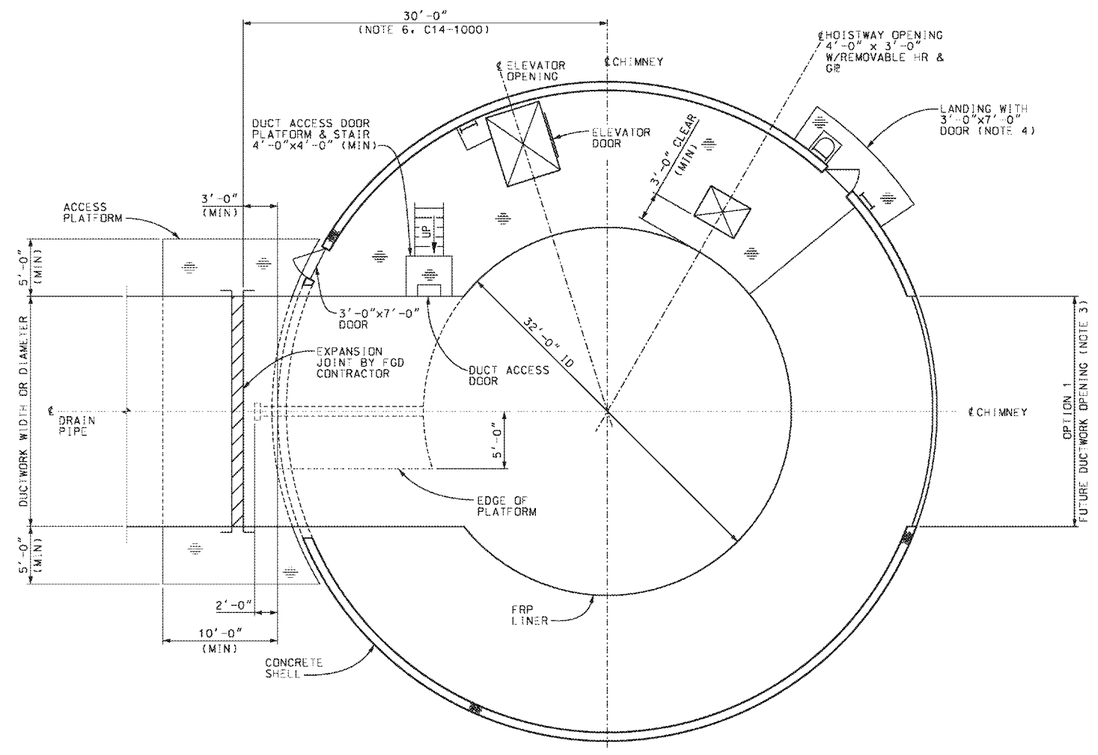

BREECHING ACCESS PLATFORM

T/GRATING EL 126'-0"
UNIT 2 AS SHOWN
UNIT 1 OPPOSITE HAND
(NOTE 2)

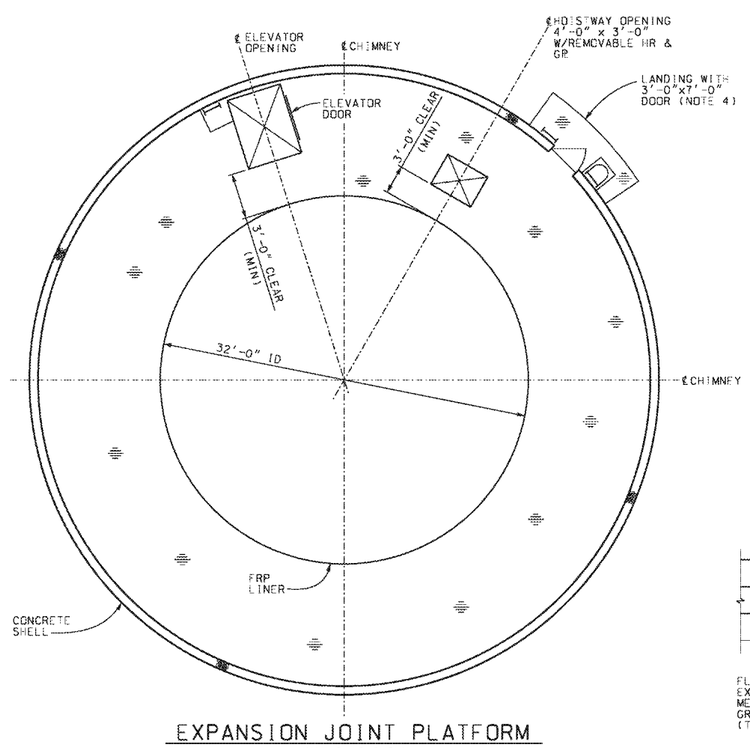

EXPANSION JOINT PLATFORM

UNIT 2 AS SHOWN
UNIT 1 OPPOSITE HAND
(NOTE 12, C14-1000)

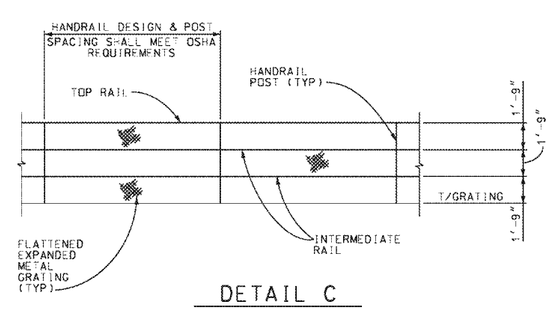

DETAIL C

SCALE: NONE

NOTES

1. FOR DETAILS SEE SHEET C14-1002.
2. BREECHING ACCESS PLATFORM TO BE CONFIGURED WITH ACCESS TO DRAIN PIPE CLEANOUT.
3. CLOSURE FOR FUTURE DUCTWORK OPENING SHALL BE REINFORCED CONCRETE DESIGNED AND DETAILED FOR REMOVAL WITHOUT DAMAGE TO ADJACENT CONCRETE.
4. ALL EXTERIOR PLATFORMS SHALL HAVE HANDRAIL WITH THIRD RAIL AND FLATTENED EXPANDED METAL GRATING (DET C).

REFERENCE DRAWINGS

CONTRACTOR/INSTALLER SHALL TAKE ALL APPROPRIATE PRECAUTIONS TO ENSURE THE SAFETY OF ALL PEOPLE LOCATED ON THE WORK SITE, INCLUDING CONTRACTOR'S/INSTALLER'S PERSONNEL (OR THAT OF ITS SUBCONTRACTOR(S)) PERFORMING THE WORK.

PROJECT NUMBER: 12194-005

CADD DRAWING
DO NOT REVISE MANUALLY

DRAWING RELEASE RECORD

REV.	DATE REL'D.	PREPARED	REVIEWED	APPROVED	PURPOSE	REV.	DATE REL'D.	PREPARED	REVIEWED	APPROVED	PURPOSE
						A	11-02-2009	T. DIETZ	G. WILLMAN	–	FOR BIDS – SPEC G-5326

ENGINEER SEAL

CONCEPTUAL DESIGN OF UNIT 1 & UNIT 2
CONCRETE CHIMNEY WITH FRP LINER
SECTIONS – SHEET 1

NEBRASKA PUBLIC POWER DISTRICT
UNIT NO. 1&2 GERALD GENTLEMAN STATION SUTHERLAND, NEBRASKA

SCALE 3/16" = 1'-0"
Sargent & Lundy LLC
P.O./CONTRACT 4700000926

DOC. NO GGSU1 -MPCE
SHEET NO. C14-1001
REV. A
CADD FILE: GGSU1-MPCE-C14-1001

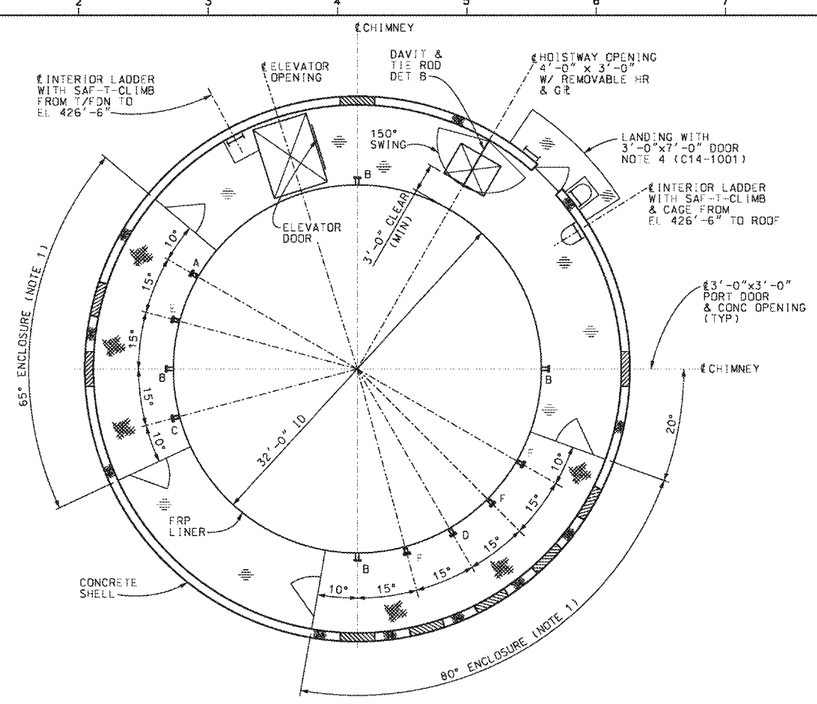

CEMS ACCESS PLATFORM

T/GRATING EL 426'-6"
UNIT 2 AS SHOWN
UNIT 1 OPPOSITE HAND

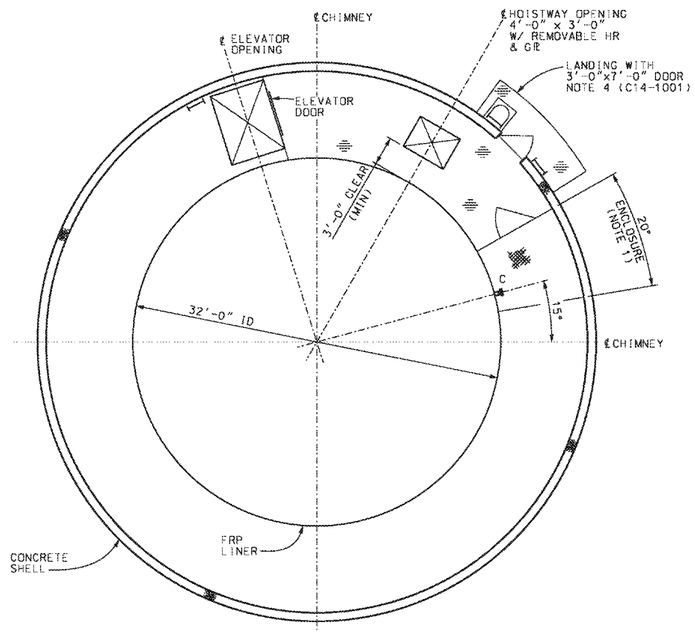

LOWER FLOW MONITORING PLATFORM

T/GRATING EL 394'-6"
UNIT 2 AS SHOWN
UNIT 1 OPPOSITE HAND

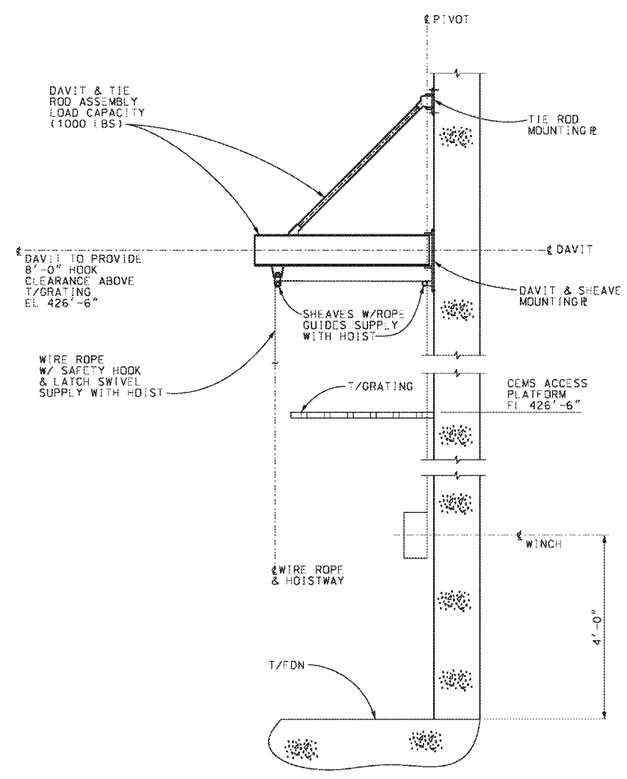

DETAIL B

SCALE: NONE

PENETRATION NO	PORT TYPE	PORT DIAMETER	NO OF PORTS	PORT DOOR IN SHELL YES OR NO
A	CEMS	6"	1	NO
B	EPA RATA TEST	6"	4	YES
C	FLOW MONITOR	6"	2	NO
D	MERCURY	6"	1	YES
E	OXYGEN	6"	1	YES
F	SPARE	6"	3	YES

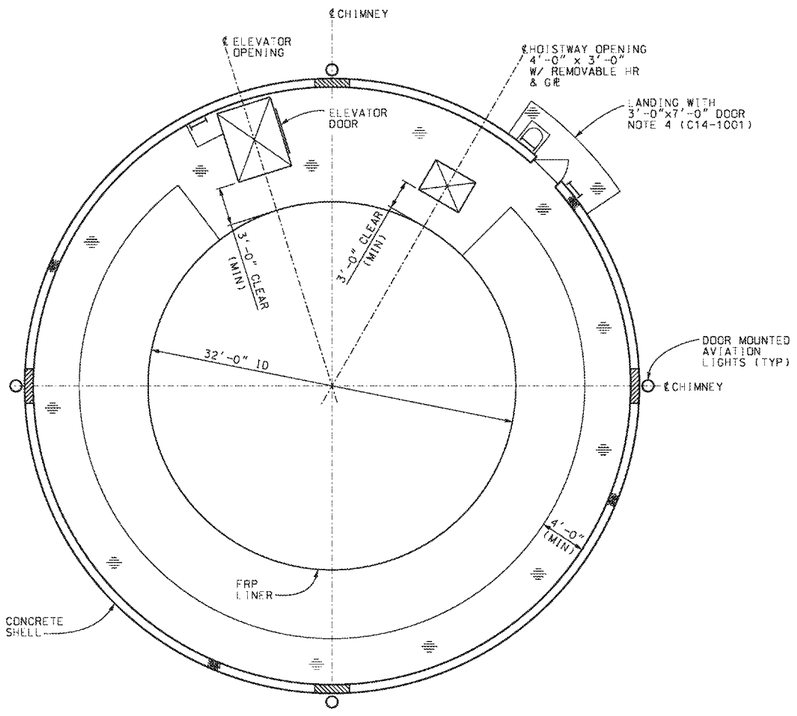

AVIATION LIGHTING PLATFORM

T/GRATING EL 116'-0", 243'-0" & 358'-0"
UNIT 2 AS SHOWN
UNIT 1 OPPOSITE HAND

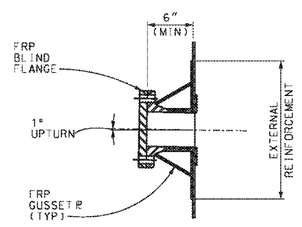

TYPICAL PORT DETAIL

SCALE: 1½" = 1'-0"

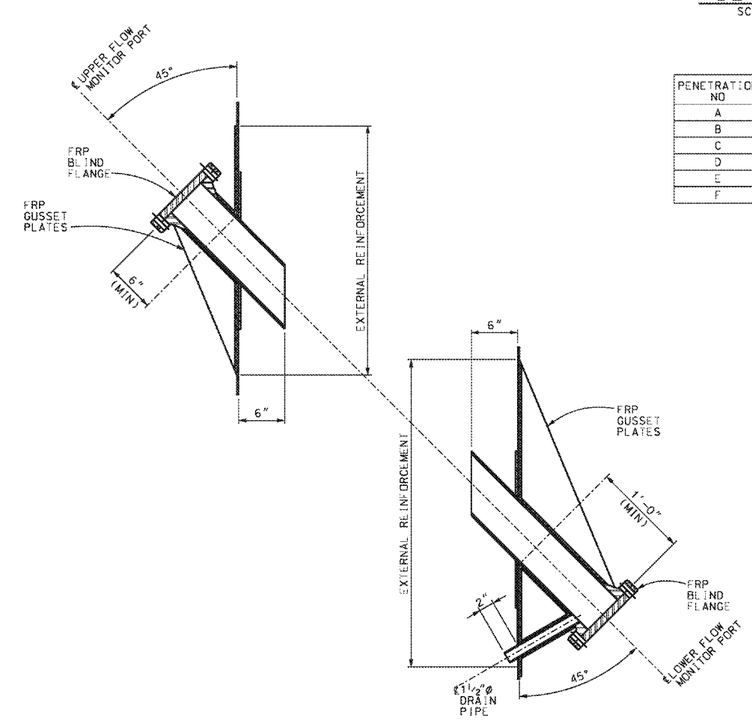

FLOW MONITOR PORTS

SCALE: NONE

NOTES

1. ENCLOSURE INCLUDES METAL SIDING ROOF & WALLS, CHECKERED PLATE FLOOR, 3'-0"x7'-0" DOORS, HVAC AND LIGHTING. ENCLOSURE SHALL HAVE MINIMUM CLEAR HEIGHT 8'-0".

REFERENCE DRAWINGS

CONTRACTOR/INSTALLER SHALL TAKE ALL APPROPRIATE PRECAUTIONS TO ENSURE THE SAFETY OF ALL PEOPLE LOCATED ON THE WORK SITE, INCLUDING CONTRACTOR'S/INSTALLER'S PERSONNEL (OR THAT OF ITS SUBCONTRACTOR(S)) PERFORMING THE WORK.

PROJECT NUMBER: 12194-005

CADD DRAWING
DO NOT REVISE MANUALLY

DRAWING RELEASE RECORD

REV.	DATE REL'D.	PREPARED	REVIEWED	APPROVED	PURPOSE	REV.	DATE REL'D.	PREPARED	REVIEWED	APPROVED	PURPOSE
						A	11-02-2009	T. DIETZ	G. WILLMAN	–	FOR BIDS – SPEC G-5326

ENGINEER SEAL

CONCEPTUAL DESIGN OF UNIT 1 & UNIT 2
CONCRETE CHIMNEY WITH FRP LINER
SECTIONS – SHEET 2

NEBRASKA PUBLIC POWER DISTRICT
UNIT NO. 1&2 GERALD GENTLEMAN STATION SUTHERLAND, NEBRASKA

SCALE 3/16" = 1'-0"
Sargent & Lundy LLC
P.O./CONTRACT 4700000926

DOC. NO GGSU1 -MPCE
SHEET NO. C14-1002
REV. A
CADD FILE: GGSU1-MPCE-C14-1002

Question 1

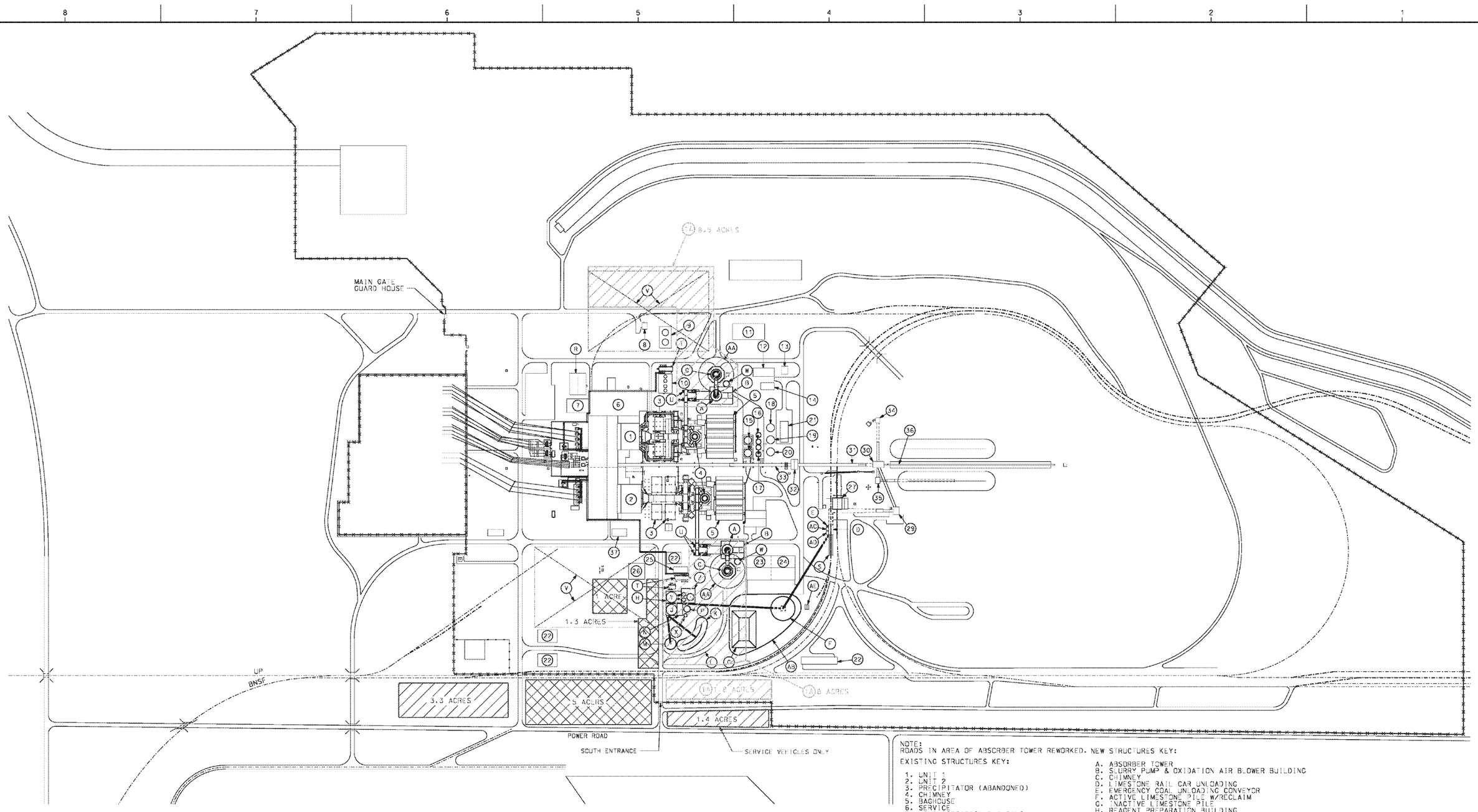

NOTE:
ROADS IN AREA OF ABSORBER TOWER REWORKED. NEW STRUCTURES KEY:

EXISTING STRUCTURES KEY:

1. UNIT 1
2. UNIT 2
3. PRECIPITATOR (ABANDONED)
4. CHIMNEY
5. BAGHOUSE
6. SERVICE
7. ADMINISTRATION BUILDING
8. FUEL OIL PUMP HOUSE
9. FUEL OIL TANKS
10. HVAC COOLING TOWERS
11. SEWAGE TREATMENT PLANT
12. NEUTRALIZATION BASIN
13. CHEMICAL BUILDING
14. OIL WATER SEPARATOR
15. FLY ASH SILO
16. DEWATERING BIN (ABANDONED)
17. HYDRO BIN (ABANDONED)
18. ASH WATER MAKE-UP TANK (ABANDONED)
19. ASH WATER SURGE TANK
20. ASH WATER SETTLING TANK (ABANDONED)
21. BOTTOM ASH PUMPHOUSE
22. WAREHOUSE
23. WASTE DISPOSAL
24. MOBILE MAINTENANCE
25. BREAK BUILDING (RELOCATED)
26. TRAINING/SAFETY BUILDING
27. ROTARY COAL CAR DUMPER BUILDING
28. COAL UNLOADING CONVEYORS A-C & B-C
29. TRANSFER BUILDING
30. STACKOUT/RECLAIM BUILDING
31. RECLAIM CONEYORS A-C & B-C
32. CRUSHER BUILDING
33. PLANT CONVEYORS A-C & B-C
34. EMERGENCY RECLAIM HOPPER
35. RECLAIM TRANSFER BUILDING
36. YARD CONVEYOR A-C
37. PULVERIZER MAINTENANCE BUILDING

A. ABSORBER TOWER
B. SLURRY PUMP & OXIDATION AIR BLOWER BUILDING
C. CHIMNEY
D. LIMESTONE RAIL CAR UNLOADING
E. EMERGENCY COAL UNLOADING CONVEYOR
F. ACTIVE LIMESTONE PILE W/RECLAIM
G. INACTIVE LIMESTONE PILE
H. REAGENT PREPARATION BUILDING
J. WASTE DEWATERING BUILDING
K. GYPSUM STACK OUT
L. WASTE HAUL ROAD
M. GYPSUM EMERGENCY STACK OUT
N. WASTEWATER TREATMENT BUILDING
P. RECLAIM WATER TANK
R. WAREHOUSE
S. THAWING SHED
T. ELECTRICAL BUILDING
U. FGD BOOSTER FANS
V. RESERVE SPACE FOR CO2 RECOVERY SYSTEM
W. HYDROCLONE UNDERFLOW TANK
X. FILTER FEED TANK
Y. LIMESTONE SILOS
Z. LIMESTONE SLURRY STORAGE TANK
AA. SHELL SAFETY CLEARANCE ZONE
AB. 12 MONTH LIMESTONE PILE
AC. ELECTRICAL EQUIPMENT ROOM
AD. DUST SUPPRESSION ROOM
AE. BULLDOZER STORAGE BUILDING

NORTH

LEGEND

- FENCE
- FOUNDATION CONTRACTOR LAYDOWN AND WORK AREA
- CRAFT FACILITIES AND OFFICE TRAILERS
- CONTRACTOR PARKING

RAIL KEY:

- EXISTING
- PROPOSED NPPD ADDITIONS

250' 0' 250' 500' 750' 1000'

CONTRACTOR/INSTALLER SHALL TAKE ALL APPROPRIATE PRECAUTIONS TO ENSURE THE SAFETY OF ALL PEOPLE LOCATED ON THE WORK SITE, INCLUDING CONTRACTOR'S/INSTALLER'S PERSONNEL (OR THAT OF ITS SUBCONTRACTOR(S)) PERFORMING THE WORK.

FILENAME: msk0mpceld01.dgn

DRAWING RELEASE RECORD

REV.	DATE REL'D.	PREPARED	REVIEWED	APPROVED	PURPOSE

DRAWING RELEASE RECORD

REV.	DATE REL'D.	PREPARED	REVIEWED	APPROVED	PURPOSE

SCALE: NONE

PROJECT NUMBER: 12194-001

LAYDOWN AREAS
03/2011 TO 02/2012
MULTI-POLLUTANT CONTROL
EQUIPMENT PROJECT
GERALD GENTLEMAN STATION
NEBRASKA PUBLIC
POWER DISTRICT

Sargent & Lundy LLC

DRAWING NO. MSK-OMPCELD REV.

SHEET 1 OF 3

REV. 4/11/2011

03/07/2012 09:25:24 AM
msk0mpceld01.dgn

NPPDRH114_0003968

ED_005798_00000554-00010

Question 1

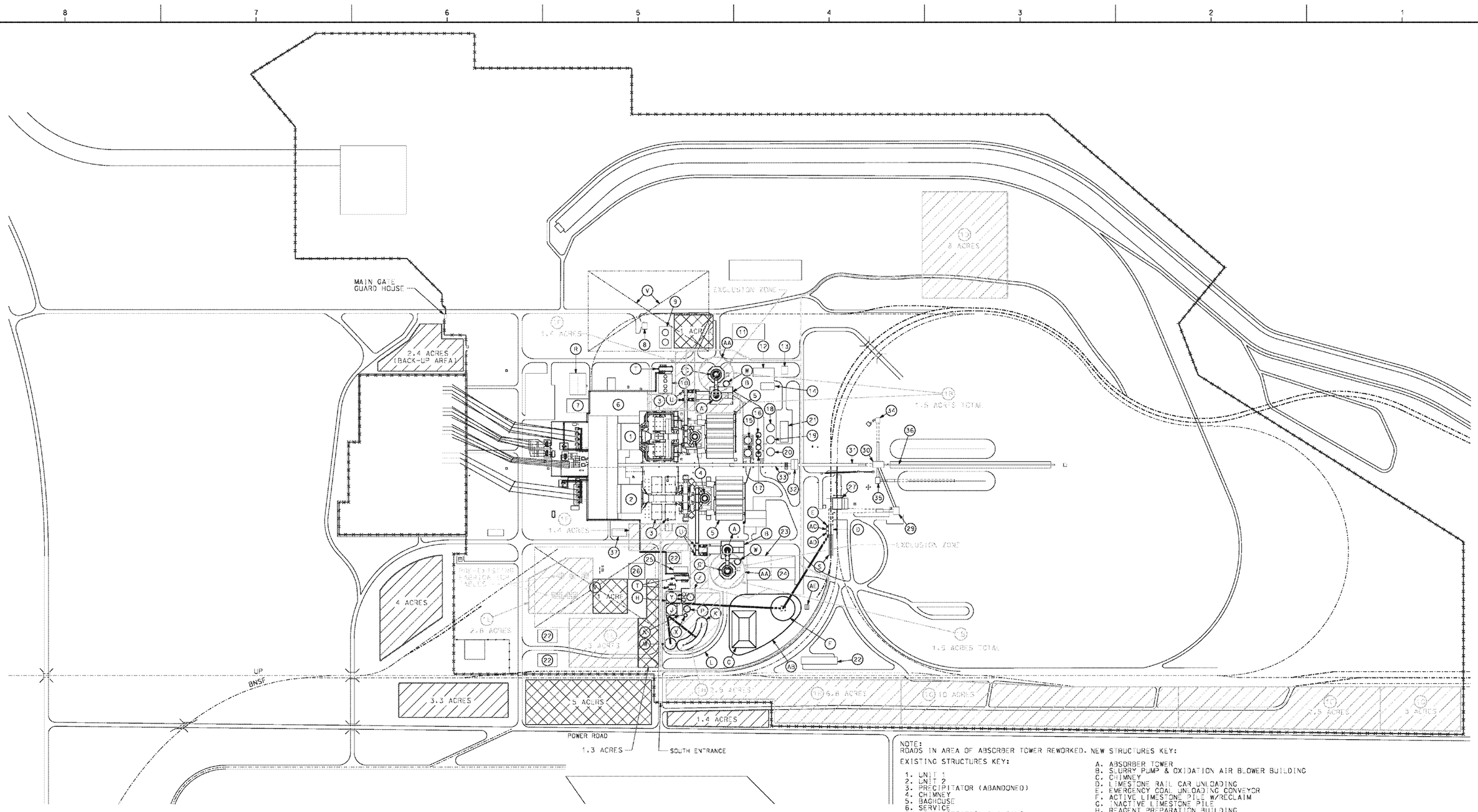

LEGEND

- FENCE
- CHIMNEY CONSTRUCTION
- ESP LINER FABRICATION AND LAYDOWN AREA
- ESP DISMANTLE AREA (ESP BIG PIECE DEMOLITION OPTION)
- BYPASS DUCT FABRICATION AREA AND, GWC DUCT FABRICATION AND LAYDOWN AREA (SCR AND BYPASS)
- CRANE OPERATIONS AND LOADING AREA (ESP STICK DEMOLITION OPTION)
- FGD FABRICATION/LAYDOWN AREA
- MATERIAL HANDLING GWC
- CRAFT FACILITIES AND OFFICE TRAILERS
- CONTRACTOR PARKING
- PROPOSED ESP TRANSPORT PAT

NOTE:
ROADS IN AREA OF ABSORBER TOWER REWORKED.

EXISTING STRUCTURES KEY:

1. UNIT 1
2. UNIT 2
3. PRECIPITATOR (ABANDONED)
4. CHIMNEY
5. BAGHOUSE
6. SERVICE
7. ADMINISTRATION BUILDING
8. FUEL OIL PUMP HOUSE
9. FUEL OIL TANKS
10. HVAC COOLING TOWERS
11. SEWAGE TREATMENT PLANT
12. NEUTRALIZATION BASIN
13. CHEMICAL BUILDING
14. OIL WATER SEPARATOR
15. FLY ASH SILO
16. DEWATERING BIN (ABANDONED)
17. HYDRO BIN (ABANDONED)
18. ASH WATER MAKE-UP TANK (ABANDONED)
19. ASH WATER SURGE TANK
20. ASH WATER SETTLING TANK (ABANDONED)
21. BOTTOM ASH PUMPHOUSE
22. WAREHOUSE
23. WASTE DISPOSAL
24. MOBILE MAINTENANCE
25. BREAK BUILDING (RELOCATED)
26. TRAINING/SAFETY BUILDING
27. ROTARY COAL CAR DUMPER BUILDING
28. COAL UNLOADING CONVEYORS A-C & B-C
29. TRANSFER BUILDING
30. STACKOUT/RECLAIM BUILDING
31. RECLAIM CONEYORS A-C & B-C
32. CRUSHER BUILDING
33. PLANT CONVEYORS A-C & B-C
34. EMERGENCY RECLAIM HOPPER
35. RECLAIM TRANSFER BUILDING
36. YARD CONVEYOR A-C
37. PULVERIZER MAINTENANCE BUILDING

NEW STRUCTURES KEY:

A. ABSORBER TOWER
B. SLURRY PUMP & OXIDATION AIR BLOWER BUILDING
C. CHIMNEY
D. LIMESTONE RAIL CAR UNLOADING
E. EMERGENCY COAL UNLOADING CONVEYOR
F. ACTIVE LIMESTONE PILE W/RECLAIM
G. INACTIVE LIMESTONE PILE
H. REAGENT PREPARATION BUILDING
J. WASTE DEWATERING BUILDING
K. GYPSUM STACK OUT
L. WASTE HAUL ROAD
M. GYPSUM EMERGENCY STACK OUT
N. WASTEWATER TREATMENT BUILDING
P. RECLAIM WATER TANK
R. WAREHOUSE
S. THAWING SHED
T. ELECTRICAL BUILDING
U. FGD BOOSTER FANS
V. RESERVE SPACE FOR CO2 RECOVERY SYSTEM
W. HYDROCLONE UNDERFLOW TANK
X. FILTER FEED TANK
Y. LIMESTONE SILOS
Z. LIMESTONE SLURRY STORAGE TANK
AA. SHELL SAFETY CLEARANCE ZONE
AB. 12 MONTH LIMESTONE PILE
AC. ELECTRICAL EQUIPMENT ROOM
AD. DUST SUPPRESSION ROOM
AE. BULLDOZER STORAGE BUILDING

NORTH

RAIL KEY:

- EXISTING
- PROPOSED NPPD ADDITIONS

250' 0' 250' 500' 750' 1000'

CONTRACTOR/INSTALLER SHALL TAKE ALL APPROPRIATE PRECAUTIONS TO ENSURE THE SAFETY OF ALL PEOPLE LOCATED ON THE WORK SITE, INCLUDING CONTRACTOR'S/INSTALLER'S PERSONNEL (OR THAT OF ITS SUBCONTRACTOR(S)) PERFORMING THE WORK.

FILENAME: msk0mpceld02.dgn

DRAWING RELEASE RECORD

REV.	DATE REL'D.	PREPARED	REVIEWED	APPROVED	PURPOSE

DRAWING RELEASE RECORD

REV.	DATE REL'D.	PREPARED	REVIEWED	APPROVED	PURPOSE

SCALE: NONE

PROJECT NUMBER: 12194-001

LAYDOWN AREAS
03/2012 TO 02/2013
MULTI-POLLUTANT CONTROL
EQUIPMENT PROJECT
GERALD GENTLEMAN STATION
NEBRASKA PUBLIC
POWER DISTRICT

Sargent & Lundy LLC

DRAWING NO. MSK-OMPCELD REV.

SHEET 2 OF 3

NPPDRH114_0003969

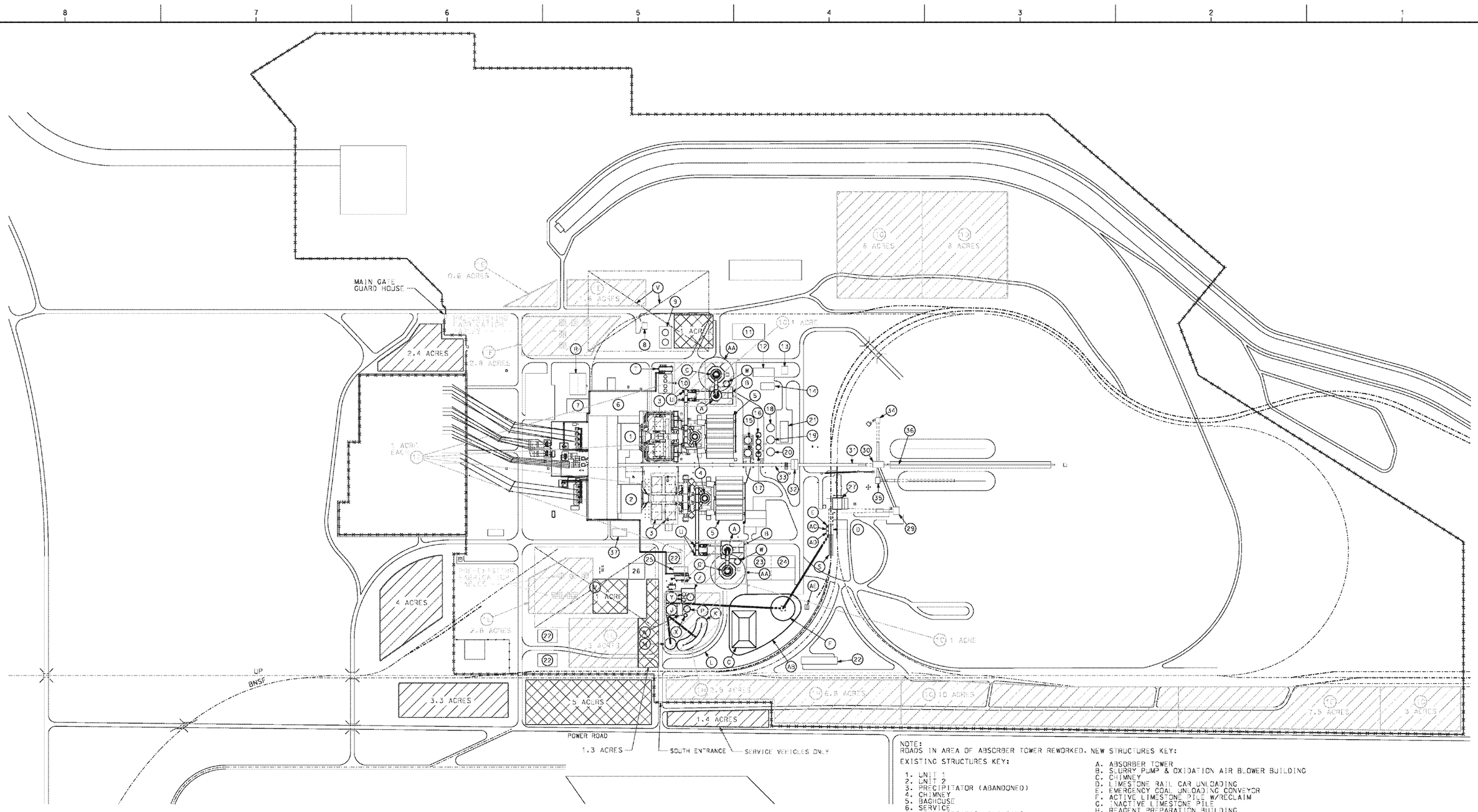

NOTE:
ROADS IN AREA OF ABSORBER TOWER REWORKED. NEW STRUCTURES KEY:

EXISTING STRUCTURES KEY:

1. UNIT 1
2. UNIT 2
3. PRECIPITATOR (ABANDONED)
4. CHIMNEY
5. BAGHOUSE
6. SERVICE
7. ADMINISTRATION BUILDING
8. FUEL OIL PUMP HOUSE
9. FUEL OIL TANKS
10. HVAC COOLING TOWERS
11. SEWAGE TREATMENT PLANT
12. NEUTRALIZATION BASIN
13. CHEMICAL BUILDING
14. OIL WATER SEPARATOR
15. FLY ASH SILO
16. DEWATERING BIN (ABANDONED)
17. HYDRO BIN (ABANDONED)
18. ASH WATER MAKE-UP TANK (ABANDONED)
19. ASH WATER SURGE TANK
20. ASH WATER SETTLING TANK (ABANDONED)
21. BOTTOM ASH PUMPHOUSE
22. WAREHOUSE
23. WASTE DISPOSAL
24. MOBILE MAINTENANCE
25. BREAK BUILDING (RELOCATED)
26. TRAINING/SAFETY BUILDING
27. ROTARY COAL CAR DUMPER BUILDING
28. COAL UNLOADING CONVEYORS A-C & B-C
29. TRANSFER BUILDING
30. STACKOUT/RECLAIM BUILDING
31. RECLAIM CONEYORS A-C & B-C
32. CRUSHER BUILDING
33. PLANT CONVEYORS A-C & B-C
34. EMERGENCY RECLAIM HOPPER
35. RECLAIM TRANSFER BUILDING
36. YARD CONVEYOR A-C
37. PULVERIZER MAINTENANCE BUILDING

A. ABSORBER TOWER
B. SLURRY PUMP & OXIDATION AIR BLOWER BUILDING
C. CHIMNEY
D. LIMESTONE RAIL CAR UNLOADING
E. EMERGENCY COAL UNLOADING CONVEYOR
F. ACTIVE LIMESTONE PILE W/RECLAIM
G. INACTIVE LIMESTONE PILE
H. REAGENT PREPARATION BUILDING
J. WASTE DEWATERING BUILDING
K. GYPSUM STACK OUT
L. WASTE HAUL ROAD
M. GYPSUM EMERGENCY STACK OUT
N. WASTEWATER TREATMENT BUILDING
P. RECLAIM WATER TANK
R. WAREHOUSE
S. THAWING SHED
T. ELECTRICAL BUILDING
U. FGD BOOSTER FANS
V. RESERVE SPACE FOR CO2 RECOVERY SYSTEM
W. HYDROCLONE UNDERFLOW TANK
X. FILTER FEED TANK
Y. LIMESTONE SILOS
Z. LIMESTONE SLURRY STORAGE TANK
AA. SHELL SAFETY CLEARANCE ZONE
AB. 12 MONTH LIMESTONE PILE
AC. ELECTRICAL EQUIPMENT ROOM
AD. DUST SUPPRESSION ROOM
AE. BULLDOZER STORAGE BUILDING

LEGEND

FENCE

FRP LINER FABRICATION AND LAYDOWN AREA

ESP DISMANTLE AREA (ESP BIG PIECE DEMOLITION OPTION)

BYPASS DUCT FABRICATION AREA AND, GWC DUCT FABRICATION AND LAYDOWN AREA (SCR AND BYPASS)

FGD FABRICATION/LAYDOWN AREA

MATERIAL HANDLING GWC

CRAFT FACILITIES AND OFFICE TRAILERS

CONTRACTOR PARKING

NORTH

RAIL KEY:

EXISTING

PROPOSED NPPD ADDITIONS

250' 0' 250' 500' 750' 1000'

CONTRACTOR/INSTALLER SHALL TAKE ALL APPROPRIATE PRECAUTIONS TO ENSURE THE SAFETY OF ALL PEOPLE LOCATED ON THE WORK SITE, INCLUDING CONTRACTOR'S/INSTALLER'S PERSONNEL (OR THAT OF ITS SUBCONTRACTOR(S)) PERFORMING THE WORK.

FILENAME: mskOmpceld03.dgn

DRAWING RELEASE RECORD					
REV.	DATE REL'D.	PREPARED	REVIEWED	APPROVED	PURPOSE

DRAWING RELEASE RECORD					
REV.	DATE REL'D.	PREPARED	REVIEWED	APPROVED	PURPOSE

SCALE: NONE

PROJECT NUMBER: 12194-001

LAYDOWN AREAS
03/2013 TO 06/2015
MULTI-POLLUTANT CONTROL
EQUIPMENT PROJECT
GERALD GENTLEMAN STATION
NEBRASKA PUBLIC
POWER DISTRICT

Sargent & Lundy LLC

DRAWING NO. MSK-OMPCELD

REV.

SHEET 3 OF 3

NPPDRH114_0003970

Question 1

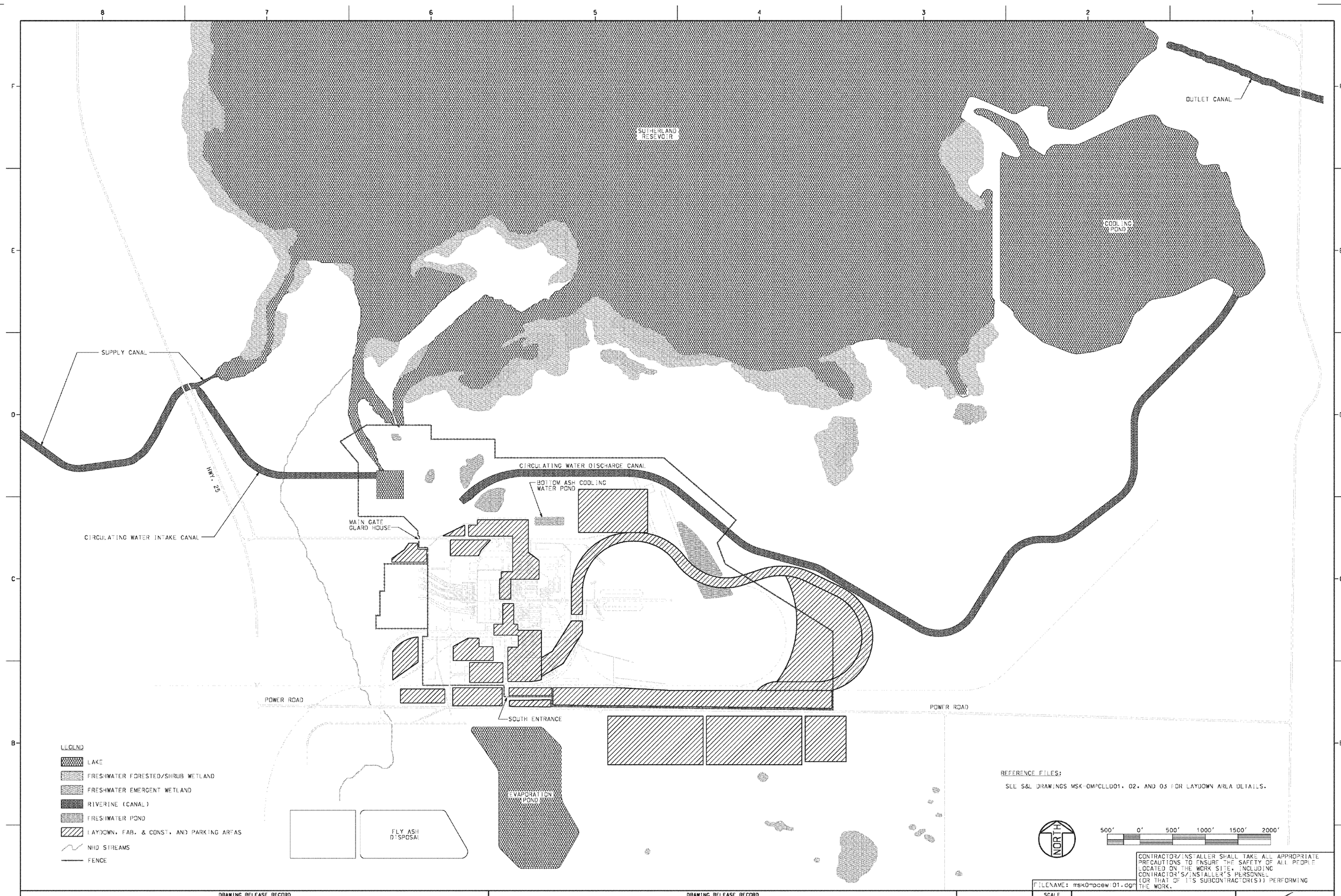

NPPDRH114_0003971

Question 1

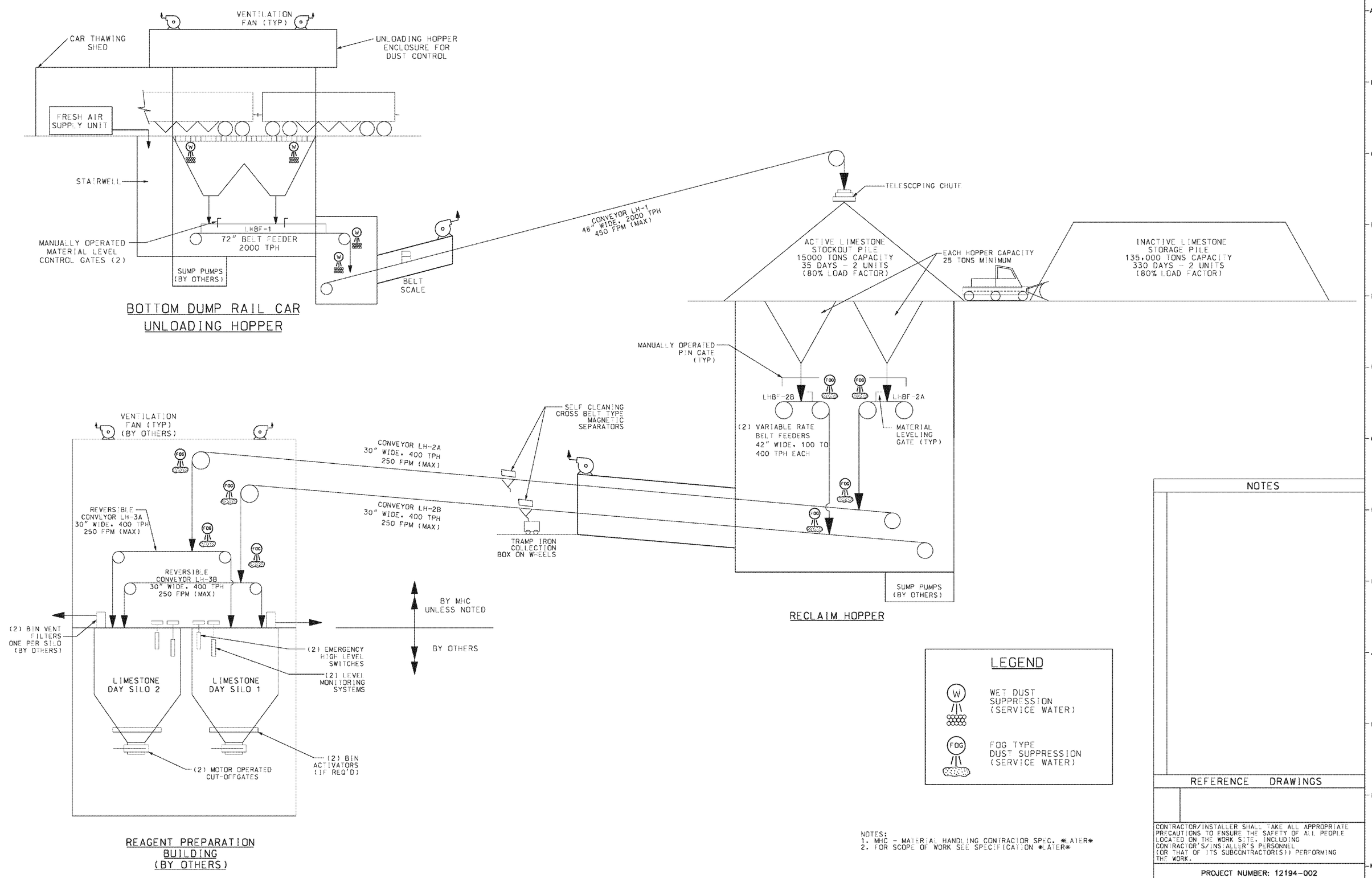

NOTES:
1. MHC - MATERIAL HANDLING CONTRACTOR SPEC. *LATER*
2. FOR SCOPE OF WORK SEE SPECIFICATION *LATER*

NOTES

REFERENCE DRAWINGS

CONTRACTOR/INSTALLER SHALL TAKE ALL APPROPRIATE PRECAUTIONS TO ENSURE THE SAFETY OF ALL PEOPLE LOCATED ON THE WORK SITE, INCLUDING CONTRACTOR'S/INSTALLER'S PERSONNEL (OR THAT OF ITS SUBCONTRACTOR(S)) PERFORMING THE WORK.

PROJECT NUMBER: 12194-002

CADD DRAWING
DO NOT REVISE MANUALLY

DRAWING RELEASE RECORD

REV.	DATE REL'D.	PREPARED	REVIEWED	APPROVED	PURPOSE	REV.	DATE REL'D.	PREPARED	REVIEWED	APPROVED	PURPOSE
						0		D.LODEWYCK	B.SHAW		FOR REVIEW AND COMMENTS

ENGINEER SEAL

LIMESTONE HANDLING SYSTEM
FLOW DIAGRAM
MULTI-POLLUTANT CONTROL EQUIPMENT

NEBRASKA PUBLIC POWER DISTRICT
UNIT NO. 1&2 GERALD GENTLEMAN STATION SUTHERLAND, NEBRASKA

SCALE NONE
Sargent & Lundy LLC
P.O./CONTRACT 4700000926

DOC. NO CCSUO -MPCE
SHEET NO. M9-1000
REV. 0
CADD FILE: 05SUO-MPCE-MB-1000.dgn

NPPDRH114_0003972

Question 1

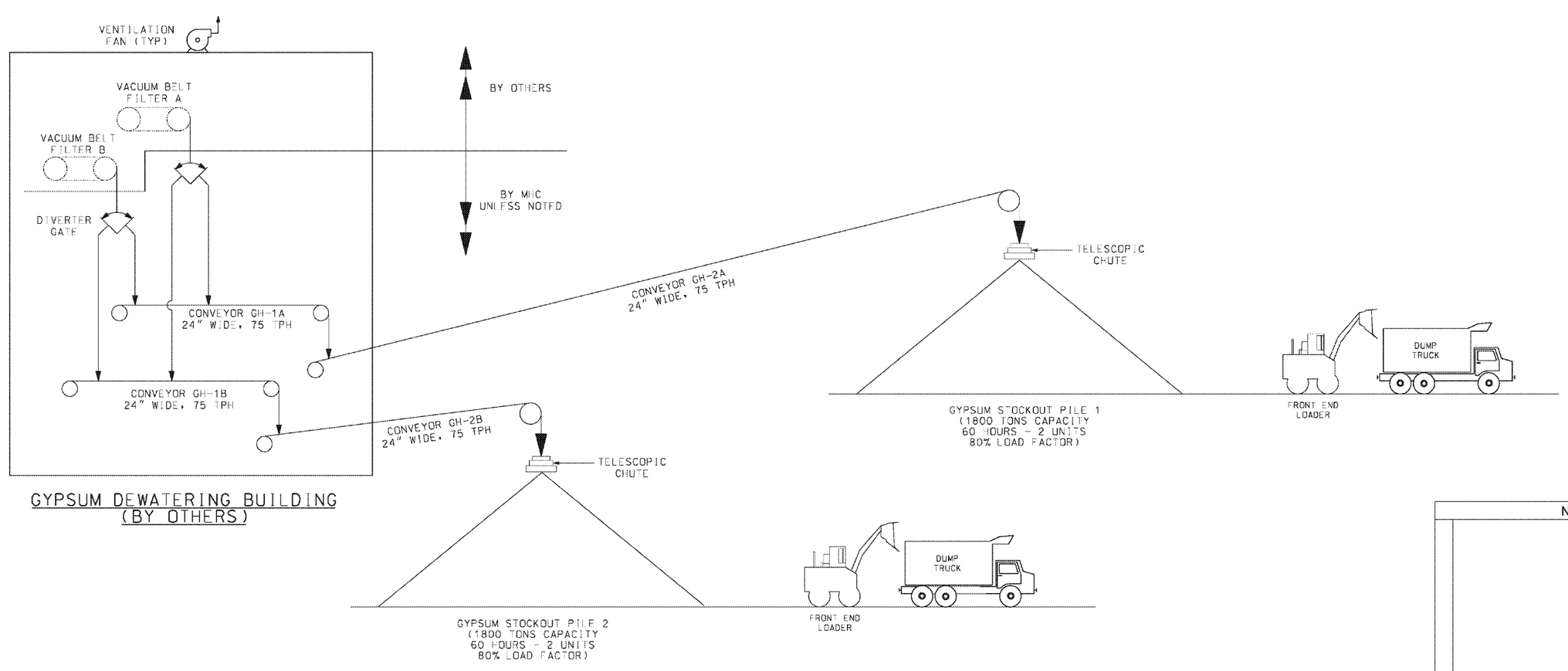

GYPSUM DEWATERING BUILDING (BY OTHERS)

NOTES:
1. MHC - MATERIAL HANDLING CONTRACTOR SPEC. *LATER*
2. FOR SCOPE OF WORK SEE SPECIFICATION *LATER*

NOTES

REFERENCE DRAWINGS

CONTRACTOR/INSTALLER SHALL TAKE ALL APPROPRIATE PRECAUTIONS TO ENSURE THE SAFETY OF ALL PEOPLE LOCATED ON THE WORK SITE, INCLUDING CONTRACTOR'S/INSTALLER'S PERSONNEL (OR THAT OF ITS SUBCONTRACTOR(S)) PERFORMING THE WORK.

PROJECT NUMBER: 12194-002

CADD DRAWING
DO NOT REVISE MANUALLY

DRAWING RELEASE RECORD

REV.	DATE REL'D.	PREPARED	REVIEWED	APPROVED	PURPOSE	REV.	DATE REL'D.	PREPARED	REVIEWED	APPROVED	PURPOSE
						0		D.LODEWYCK	B.SHAW		FOR REVIEW AND COMMENTS

ENGINEER SEAL

GYPSUM HANDLING SYSTEM
FLOW DIAGRAM
MULTI-POLLUTANT CONTROL EQUIPMENT PROJECT

NEBRASKA PUBLIC POWER DISTRICT
UNIT NO. 1&2 GERALD GENTLEMAN STATION SUTHERLAND, NEBRASKA

SCALE NONE
Sargent & Lundy LLC
P.O./CONTRACT 4700000926

DOC. NO CCSUO -MPCC
SHEET NO. M10-1000
REV. 0
CADD FILE: CCSUO-MPCC-M10-1000.dgn

NPPDRH114_0003973